AUTHENTICATED
U.S. GOVERNMENT
INFORMATION
GPO

CODE OF FEDERAL REGULATIONS

Title 29
Labor

Part 1927 to End

Revised as of July 1, 2014

Containing a codification of documents
of general applicability and future effect

As of July 1, 2014

Published by the Office of the Federal Register
National Archives and Records Administration
as a Special Edition of the Federal Register

U.S. GOVERNMENT OFFICIAL EDITION NOTICE

Legal Status and Use of Seals and Logos

The seal of the National Archives and Records Administration (NARA) authenticates the Code of Federal Regulations (CFR) as the official codification of Federal regulations established under the Federal Register Act. Under the provisions of 44 U.S.C. 1507, the contents of the CFR, a special edition of the Federal Register, shall be judicially noticed. The CFR is prima facie evidence of the original documents published in the Federal Register (44 U.S.C. 1510).

It is prohibited to use NARA's official seal and the stylized Code of Federal Regulations logo on any republication of this material without the express, written permission of the Archivist of the United States or the Archivist's designee. Any person using NARA's official seals and logos in a manner inconsistent with the provisions of 36 CFR part 1200 is subject to the penalties specified in 18 U.S.C. 506, 701, and 1017.

Use of ISBN Prefix

This is the Official U.S. Government edition of this publication and is herein identified to certify its authenticity. Use of the 0–16 ISBN prefix is for U.S. Government Printing Office Official Editions only. The Superintendent of Documents of the U.S. Government Printing Office requests that any reprinted edition clearly be labeled as a copy of the authentic work with a new ISBN.

U.S. GOVERNMENT PRINTING OFFICE

U.S. Superintendent of Documents • Washington, DC 20402–0001

http://bookstore.gpo.gov

Phone: toll-free (866) 512-1800; DC area (202) 512-1800

Table of Contents

	Page
Explanation	v
Title 29:	
SUBTITLE B—REGULATIONS RELATING TO LABOR (CONTINUED)	
Chapter XVII—Occupational Safety and Health Administration, Department of Labor (Continued)	5
Chapter XX—Occupational Safety and Health Review Commission	343
Chapter XXV—Employee Benefits Security Administration, Department of Labor	413
Chapter XXVII—Federal Mine Safety and Health Review Commission	915
Chapter XL—Pension Benefit Guaranty Corporation	969
Finding Aids:	
Table of CFR Titles and Chapters	1275
Alphabetical List of Agencies Appearing in the CFR	1295
List of CFR Sections Affected	1305

Cite this Code: CFR

To cite the regulations in this volume use title, part and section number. Thus, 29 CFR 1928.1 *refers to title 29, part 1928, section 1.*

Explanation

The Code of Federal Regulations is a codification of the general and permanent rules published in the Federal Register by the Executive departments and agencies of the Federal Government. The Code is divided into 50 titles which represent broad areas subject to Federal regulation. Each title is divided into chapters which usually bear the name of the issuing agency. Each chapter is further subdivided into parts covering specific regulatory areas.

Each volume of the Code is revised at least once each calendar year and issued on a quarterly basis approximately as follows:

Title 1 through Title 16.....as of January 1
Title 17 through Title 27.....as of April 1
Title 28 through Title 41.....as of July 1
Title 42 through Title 50.....as of October 1

The appropriate revision date is printed on the cover of each volume.

LEGAL STATUS

The contents of the Federal Register are required to be judicially noticed (44 U.S.C. 1507). The Code of Federal Regulations is prima facie evidence of the text of the original documents (44 U.S.C. 1510).

HOW TO USE THE CODE OF FEDERAL REGULATIONS

The Code of Federal Regulations is kept up to date by the individual issues of the Federal Register. These two publications must be used together to determine the latest version of any given rule.

To determine whether a Code volume has been amended since its revision date (in this case, July 1, 2014), consult the ''List of CFR Sections Affected (LSA),'' which is issued monthly, and the ''Cumulative List of Parts Affected,'' which appears in the Reader Aids section of the daily Federal Register. These two lists will identify the Federal Register page number of the latest amendment of any given rule.

EFFECTIVE AND EXPIRATION DATES

Each volume of the Code contains amendments published in the Federal Register since the last revision of that volume of the Code. Source citations for the regulations are referred to by volume number and page number of the Federal Register and date of publication. Publication dates and effective dates are usually not the same and care must be exercised by the user in determining the actual effective date. In instances where the effective date is beyond the cutoff date for the Code a note has been inserted to reflect the future effective date. In those instances where a regulation published in the Federal Register states a date certain for expiration, an appropriate note will be inserted following the text.

OMB CONTROL NUMBERS

The Paperwork Reduction Act of 1980 (Pub. L. 96–511) requires Federal agencies to display an OMB control number with their information collection request.

Many agencies have begun publishing numerous OMB control numbers as amendments to existing regulations in the CFR. These OMB numbers are placed as close as possible to the applicable recordkeeping or reporting requirements.

PAST PROVISIONS OF THE CODE

Provisions of the Code that are no longer in force and effect as of the revision date stated on the cover of each volume are not carried. Code users may find the text of provisions in effect on any given date in the past by using the appropriate List of CFR Sections Affected (LSA). For the convenience of the reader, a ''List of CFR Sections Affected'' is published at the end of each CFR volume. For changes to the Code prior to the LSA listings at the end of the volume, consult previous annual editions of the LSA. For changes to the Code prior to 2001, consult the List of CFR Sections Affected compilations, published for 1949-1963, 1964-1972, 1973-1985, and 1986-2000.

''[RESERVED]'' TERMINOLOGY

The term ''[Reserved]'' is used as a place holder within the Code of Federal Regulations. An agency may add regulatory information at a ''[Reserved]'' location at any time. Occasionally ''[Reserved]'' is used editorially to indicate that a portion of the CFR was left vacant and not accidentally dropped due to a printing or computer error.

INCORPORATION BY REFERENCE

What is incorporation by reference? Incorporation by reference was established by statute and allows Federal agencies to meet the requirement to publish regulations in the Federal Register by referring to materials already published elsewhere. For an incorporation to be valid, the Director of the Federal Register must approve it. The legal effect of incorporation by reference is that the material is treated as if it were published in full in the Federal Register (5 U.S.C. 552(a)). This material, like any other properly issued regulation, has the force of law.

What is a proper incorporation by reference? The Director of the Federal Register will approve an incorporation by reference only when the requirements of 1 CFR part 51 are met. Some of the elements on which approval is based are:

(a) The incorporation will substantially reduce the volume of material published in the Federal Register.

(b) The matter incorporated is in fact available to the extent necessary to afford fairness and uniformity in the administrative process.

(c) The incorporating document is drafted and submitted for publication in accordance with 1 CFR part 51.

What if the material incorporated by reference cannot be found? If you have any problem locating or obtaining a copy of material listed as an approved incorporation by reference, please contact the agency that issued the regulation containing that incorporation. If, after contacting the agency, you find the material is not available, please notify the Director of the Federal Register, National Archives and Records Administration, 8601 Adelphi Road, College Park, MD 20740-6001, or call 202-741-6010.

CFR INDEXES AND TABULAR GUIDES

A subject index to the Code of Federal Regulations is contained in a separate volume, revised annually as of January 1, entitled CFR INDEX AND FINDING AIDS. This volume contains the Parallel Table of Authorities and Rules. A list of CFR titles, chapters, subchapters, and parts and an alphabetical list of agencies publishing in the CFR are also included in this volume.

An index to the text of ''Title 3—The President'' is carried within that volume.

The Federal Register Index is issued monthly in cumulative form. This index is based on a consolidation of the ''Contents'' entries in the daily Federal Register.

A List of CFR Sections Affected (LSA) is published monthly, keyed to the revision dates of the 50 CFR titles.

REPUBLICATION OF MATERIAL

There are no restrictions on the republication of material appearing in the Code of Federal Regulations.

INQUIRIES

For a legal interpretation or explanation of any regulation in this volume, contact the issuing agency. The issuing agency's name appears at the top of odd-numbered pages.

For inquiries concerning CFR reference assistance, call 202–741–6000 or write to the Director, Office of the Federal Register, National Archives and Records Administration, 8601 Adelphi Road, College Park, MD 20740-6001 or e-mail *fedreg.info@nara.gov*.

SALES

The Government Printing Office (GPO) processes all sales and distribution of the CFR. For payment by credit card, call toll-free, 866-512-1800, or DC area, 202-512-1800, M-F 8 a.m. to 4 p.m. e.s.t. or fax your order to 202-512-2104, 24 hours a day. For payment by check, write to: US Government Printing Office – New Orders, P.O. Box 979050, St. Louis, MO 63197-9000.

ELECTRONIC SERVICES

The full text of the Code of Federal Regulations, the LSA (List of CFR Sections Affected), The United States Government Manual, the Federal Register, Public Laws, Public Papers of the Presidents of the United States, Compilation of Presidential Documents and the Privacy Act Compilation are available in electronic format via *www.ofr.gov*. For more information, contact the GPO Customer Contact Center, U.S. Government Printing Office. Phone 202-512-1800, or 866-512-1800 (toll-free). E-mail, *ContactCenter@gpo.gov*.

The Office of the Federal Register also offers a free service on the National Archives and Records Administration's (NARA) World Wide Web site for public law numbers, Federal Register finding aids, and related information. Connect to NARA's web site at *www.archives.gov/federal-register*.

The e-CFR is a regularly updated, unofficial editorial compilation of CFR material and Federal Register amendments, produced by the Office of the Federal Register and the Government Printing Office. It is available at *www.ecfr.gov*.

CHARLES A. BARTH,
Director,
Office of the Federal Register.
July 1, 2014.

THIS TITLE

Title 29—LABOR is composed of nine volumes. The parts in these volumes are arranged in the following order: Parts 0–99, parts 100–499, parts 500–899, parts 900–1899, part 1900–§ 1910.999, part 1910.1000–end of part 1910, parts 1911–1925, part 1926, and part 1927 to end. The contents of these volumes represent all current regulations codified under this title as of July 1, 2014.

The OMB control numbers for title 29 CFR part 1910 appear in § 1910.8. For the convenience of the user, § 1910.8 appears in the Finding Aids section of the volume containing § 1910.1000 to the end.

Subject indexes appear following the occupational safety and health standards (part 1910).

For this volume, Susannah C. Hurley was Chief Editor. The Code of Federal Regulations publication program is under the direction of John Hyrum Martinez, assisted by Ann Worley.

Title 29—Labor

(This book contains part 1927 to End)

SUBTITLE B—REGULATIONS RELATING TO LABOR (CONTINUED)

Part

CHAPTER XVII—Occupational Safety and Health Administration, Department of Labor (Continued) 1928

CHAPTER XX—Occupational Safety and Health Review Commission 2200

CHAPTER XXV—Employee Benefits Security Administration, Department of Labor 2509

CHAPTER XXVII—Federal Mine Safety and Health Review Commission 2700

CHAPTER XL—Pension Benefit Guaranty Corporation 4000

Subtitle B—Regulations Relating to Labor (Continued)

CHAPTER XVII—OCCUPATIONAL SAFETY AND HEALTH ADMINISTRATION, DEPARTMENT OF LABOR (CONTINUED)

Part		*Page*
1927	[Reserved]	
1928	Occupational safety and health standards for agriculture	7
1949	Office of Training and Education, Occupational Safety and Health Administration	39
1952	Approved State plans for enforcement of State standards	39
1953	Changes to State plans	144
1954	Procedures for the evaluation and monitoring of approved State plans	149
1955	Procedures for withdrawal of approval of State plans	155
1956	State plans for the development and enforcement of State standards applicable to State and local government employees in States without approved private employee plans	166
1960	Basic program elements for Federal employee occupational safety and health programs and related matters	188
1975	Coverage of employers under the Williams-Steiger Occupational Safety and Health Act of 1970	214
1977	Discrimination against employees exercising rights under the Williams-Steiger Occupational Safety and Health Act of 1970	218
1978	Procedures for the handling of retaliation complaints under the Employee Protection provision of the Surface Transportation Assistance Act of 1982 (STAA), as amended	224
1979	Procedures for the handling of discrimination complaints under section 519 of the Wendell H. Ford Aviation Investment and Reform Act for the 21st Century	234

Part		Page
1980	Procedures for the handling of retaliation complaints under section 806 of the Sarbanes-Oxley Act of 2002, as amended	241
1981	Procedures for the handling of discrimination complaints under section 6 of the Pipeline Safety Improvement Act of 2002	250
1982	Procedures for the handling of retaliation complaints under the National Transit Systems Security Act of 2007, enacted as section 1413 of the Implementing Recommendations of the 9/11 Commission Act of 2007, and the Federal Railroad Safety Act, as amended by section 1521 of the Implementing Recommendations of the 9/11 Commission Act of 2007	258
1983	Procedures for the handling of retaliation complaints under section 219 of the Consumer Product Safety Improvement Act of 2008	269
1984	Procedures for the handling of retaliation complaints under section 1558 of the Affordable Care Act	279
1985	Procedures for handling retaliation complaints under the Employee Protection Provision of the Consumer Financial Protection Act of 2010	288
1986	Procedures for the handling of retaliation complaints under the employee protection provision of the Seaman's Protection ACT (SPA), as amended	298
1987	Procedures for handling retaliation complaints under section 402 of the FDA Food Safety Modernization Act	307
1990	Identification, classification, and regulation of potential occupational carcinogens	316
1991–1999	[Reserved]	

PART 1927 [RESERVED]

PART 1928—OCCUPATIONAL SAFETY AND HEALTH STANDARDS FOR AGRICULTURE

Subpart A—General

Sec.
1928.1 Purpose and scope.

Subpart B—Applicability of Standards

1928.21 Applicable standards in 29 CFR part 1910.

Subpart C—Roll-Over Protective Structures

1928.51 Roll-over protective structures (ROPS) for tractors, used in agricultural operations.
1928.52 Protective frames for wheel-type agricultural tractors—test procedures and performance requirements.
1928.53 Protective enclosures for wheel-type agricultural tractors—test procedures and performance requirements.
APPENDIX A TO SUBPART C—EMPLOYEE OPERATING INSTRUCTIONS
APPENDIX B TO SUBPART C—FIGURES C–1 THROUGH C–16

Subpart D—Safety for Agricultural Equipment

1928.57 Guarding of farm field equipment, farmstead equipment, and cotton gins.

Subparts E–H [Reserved]

Subpart I—General Environmental Controls

1928.110 Field sanitation.

Subparts J–L [Reserved]

Subpart M—Occupational Health

1928.1027 Cadmium.

AUTHORITY: Sections 4, 6, and 8 of the Occupational Safety and Health Act of 1970 (29 U.S.C. 653, 655, 657); and Secretary of Labor's Order No. 12–71 (36 FR 8754), 8–76 (41 FR 25059), 9–83 (48 FR 35736), 1–90 (55 FR 9033), 6–96 (62 FR 111), 3–2000 (65 FR 50017), 5–2002 (67 FR 65008), or 4–2010 (75 FR 55355), as applicable; and 29 CFR 1911.

Section 1928.21 also issued under 49 U.S.C. 1801–1819 and 5 U.S.C. 533.

SOURCE: 40 FR 18257, Apr. 25, 1975, unless otherwise noted.

Subpart A—General

§ 1928.1 Purpose and scope.

This part contains occupational safety and health standards applicable to agricultural operations.

Subpart B—Applicability of Standards

§ 1928.21 Applicable standards in 29 CFR part 1910.

(a) The following standards in part 1910 of this chapter shall apply to agricultural operations:

(1) Temporary labor camps—§ 1910.142;

(2) Storage and handling of anhydrous ammonia—§ 1910.111 (a) and (b);

(3) Logging operations—§ 1910.266;

(4) Slow-moving vehicles—§ 1910.145;

(5) Hazard communication—§ 1910.1200;

(6) Cadmium—§ 1910.1027.

(7) Retention of DOT markings, placards and labels—§ 1910.1201.

(b) Except to the extent specified in paragraph (a) of this section, the standards contained in subparts B through T and subpart Z of part 1910 of this title do not apply to agricultural operations.

(Section 1928.21 contains a collection of information which has been approved by the Office of Management and Budget under OMB control number 1218–0072)

[40 FR 18257, Apr. 25, 1975, as amended at 42 FR 38569, July 29, 1977; 52 FR 31886, Aug. 24, 1987; 59 FR 36700, July 19, 1994; 59 FR 51748, Oct. 12, 1994; 61 FR 5510, Feb. 13, 1996; 61 FR 9255, Mar. 7, 1996]

Subpart C—Roll-Over Protective Structures

§ 1928.51 Roll-over protective structures (ROPS) for tractors used in agricultural operations.

(a) *Definitions.* As used in this subpart—

Agricultural tractor means a two-or four-wheel drive type vehicle, or track vehicle, of more than 20 engine horsepower, designed to furnish the power to pull, carry, propel, or drive implements that are designed for agriculture. All self-propelled implements are excluded.

Low profile tractor means a wheeled tractor possessing the following characteristics:

(1) The front wheel spacing is equal to the rear wheel spacing, as measured from the centerline of each right wheel to the centerline of the corresponding left wheel.

(2) The clearance from the bottom of the tractor chassis to the ground does not exceed 18 inches.

(3) The highest point of the hood does not exceed 60 inches, and

(4) The tractor is designed so that the operator straddles the transmission when seated.

Tractor weight includes the protective frame or enclosure, all fuels, and other components required for normal use of the tractor. Ballast shall be added as necessary to achieve a minimum total weight of 110 lb. (50.0 kg.) per maximum power take-off horsepower at the rated engine speed or the maximum gross vehicle weight specified by the manufacturer, whichever is the greatest. Front end weight shall be at least 25 percent of the tractor test weight. In case power take-off horsepower is not available, 95 percent of net engine flywheel horsepower shall be used.

(b) *General requirements.* Agricultural tractors manufactured after October 25, 1976, shall meet the following requirements:

(1) *Roll-over protective structures (ROPS).* ROPS shall be provided by the employer for each tractor operated by an employee. Except as provided in paragraph (b)(5) of this section, a ROPS used on wheel-type tractors shall meet the test and performance requirements of 29 CFR 1928.52, 1928.53, or 1926.1002 as appropriate. A ROPS used on track-type tractors shall meet the test and performance requirements of 29 CFR 1926.1001.

(2) *Seatbelts.* (i) Where ROPS are required by this section, the employer shall:

(A) Provide each tractor with a seatbelt which meets the requirements of this paragraph;

(B) Ensure that each employee uses such seatbelt while the tractor is moving; and

(C) Ensure that each employee tightens the seatbelt sufficiently to confine the employee to the protected area provided by the ROPS.

(ii) Each seatbelt shall meet the requirements set forth in Society of Automotive Engineers Standard SAE J4C, 1965 Motor Vehicle Seat Belt Assemblies,[2] except as noted hereafter:

(A) Where a suspended seat is used, the seatbelt shall be fastened to the movable portion of the seat to accommodate a ride motion of the operator.

(B) The seatbelt anchorage shall be capable of withstanding a static tensile load of 1,000 pounds (453.6 kg) at 45 degrees to the horizontal equally divided between the anchorages. The seat mounting shall be capable of withstanding this load plus a load equal to four times the weight of all applicable seat components applied at 45 degrees to the horizontal in a forward and upward direction. In addition, the seat mounting shall be capable of withstanding a 500 pound (226.8 kg) belt load plus two times the weight of all applicable seat components both applied at 45 degrees to the horizontal in and upward and rearward direction. Floor and seat deformation is acceptable provided there is not structural failure or release of the seat adjusted mechanism or other locking device.

(C) The seatbelt webbing material shall have a resistance to acids, alkalies, mildew, aging, moisture, and sunlight equal to or better than that of untreated polyester fiber.

(3) *Protection from spillage.* Batteries, fuel tanks, oil reservoirs, and coolant systems shall be constructed and located or sealed to assure that spillage will not occur which may come in contact with the operator in the event of an upset.

(4) *Protection from sharp surfaces.* All sharp edges and corners at the operator's station shall be designed to minimize operator injury in the event of an upset.

(5) *Exempted uses.* Paragraphs (b)(1) and (b)(2) of this section do not apply to the following uses:

(i) *Low profile* tractors while they are used in orchards, vineyards or hop

[2] Copies may be obtained from the Society of Automotive Engineers, 400 Commonwealth Drive, Warrendale, PA 15096.

yards where the vertical clearance requirements would substantially interfere with normal operations, and while their use is incidental to the work performed therein.

(ii) *Low profile* tractors while used inside a farm building or greenhouse in which the vertical clearance is insufficient to allow a ROPS equipped tractor to operate, and while their use is incidental to the work performed therein.

(iii) Tractors while used with mounted equipment which is incompatible with ROPS (e.g. cornpickers, cotton strippers, vegetable pickers and fruit harvesters).

(6) *Remounting*. Where ROPS are removed for any reason, they shall be remounted so as to meet the requirements of this paragraph.

(c) *Labeling*. Each ROPS shall have a label, permanently affixed to the structure, which states:

(1) Manufacturer's or fabricator's name and address;

(2) ROPS model number, if any;

(3) Tractor makes, models, or series numbers that the structure is designed to fit; and

(4) That the ROPS model was tested in accordance with the requirements of this subpart.

(d) *Operating instructions*. Every employee who operates an agricultural tractor shall be informed of the operating practices contained in appendix A of this part and of any other practices dictated by the work environment. Such information shall be provided at the time of initial assignment and at least annually thereafter.

[40 FR 18257, Apr. 25, 1975, as amended at 61 FR 9255, Mar. 7, 1996; 69 FR 18803, Apr. 9, 2004; 70 FR 77003, Dec. 29, 2005]

§ 1928.52 Protective frames for wheel-type agricultural tractors—test procedures and performance requirements.

(a) *Purpose*. The purpose of this section is to establish the test and performance requirements for a protective frame designed for wheel-type agricultural tractors to minimize the frequency and severity of operator injury resulting from accidental upsets. General requirements for the protection of operators are specified in 29 CFR 1928.51.

(b) *Types of tests*. All protective frames for wheel-type agricultural tractors shall be of a model that has been tested as follows:

(1) *Laboratory test*. A laboratory energy-absorption test, either static or dynamic, under repeatable and controlled loading, to permit analysis of the protective frame for compliance with the performance requirements of this standard.

(2) *Field-upset test*. A field-upset test under controlled conditions, both to the side and rear, to verify the effectiveness of the protective system under actual dynamic conditions. Such testing may be omitted when:

(i) The analysis of the protective-frame static-energy absorption test results indicates that both FER_{is} and FER_{ir} (as defined in paragraph (d)(2)(ii) of this section) exceed 1.15; or

(ii) The analysis of the protective-frame dynamic-energy absorption test results indicates that the frame can withstand an impact of 15 percent greater than the impact it is required to withstand for the tractor weight as shown in Figure C–7.

(c) *Descriptions*—(1) *Protective frame*. A protective frame is a structure comprised of uprights mounted to the tractor, extending above the operator's seat. A typical two-post frame is shown in Figure C–1.

(2) *Overhead weather shield*. When an overhead weather shield is available for attachment to the protective frame, it may be in place during tests provided it does not contribute to the strength of the protective frame.

(3) *Overhead falling object protection*. When an overhead falling-object protection device is available for attachment to the protective frame, it may be in place during tests provided it does not contribute to the strength of the protective frame.

(d) *Test procedures*—(1) *General*. (i) The tractor weight used shall be that of the heaviest tractor model on which the protective frame is to be used.

(ii) Each test required under this section shall be performed on a new protective frame. Mounting connections of the same design shall be used during each such test.

(iii) Instantaneous deflection shall be measured and recorded for each segment of the test; see paragraph (e)(1)(i) of this section for permissible deflections.

(iv) The seat-reference point (''*SRP*'') in Figure C–3 is that point where the vertical line that is tangent to the most forward point at the longitudinal seat centerline of the seat back, and the horizontal line that is tangent to the highest point of the seat cushion, intersect in the longitudinal seat section. The seat-reference point shall be determined with the seat unloaded and adjusted to the highest and most rearward position provided for seated operation of the tractor.

(v) When the centerline of the seat is off the longitudinal center, the frame loading shall be on the side with the least space between the centerline of seat and the protective frame.

(vi) Low-temperature characteristics of the protective frame or its material shall be demonstrated as specified in paragraph (e)(1)(ii) of this section.

(vii) Rear input energy tests (static, dynamic, or field-upset) need not be performed on frames mounted to tractors having four driven wheels and more than one-half their unballasted weight on the front wheels.

(viii) Accuracy table:

Measurements	Accuracy
Deflection of the frame, in. (mm).	±5 percent of the deflection measured.
Vertical weight, lb (kg)	±5 percent of the weight measured.
Force applied to the frame, pounds force (newtons).	±5 percent of the force measured.
Dimensions of the critical zone, in. (mm).	±0.5 in. (12.5 mm).

(2) *Static test procedure*. (i) The following test conditions shall be met:

(A) The laboratory mounting base shall be the tractor chassis for which the protective frame is designed, or its equivalent;

(B) The protective frame shall be instrumented with the necessary equipment to obtain the required load-deflection data at the locations and directions specified in Figures C–2 and C–3; and

(C) When the protective frame is of a one- or two-upright design, mounting connections shall be instrumented with the necessary equipment to record the required force to be used in paragraph (d)(2)(iii)(E) and (J) of this section. Instrumentation shall be placed on mounting connections before installation load is applied.

(ii) The following definitions shall apply:

W = Tractor weight (see 29 CFR 1928.51(a)) in lb (W' in kg);

E_{is} = Energy input to be absorbed during side loading in ft-lb (E'_{is} in J [joules]);

$E_{is} = 723 + 0.4\ W$ ($E'_{is} = 100 + 0.12\ W'$);

E_{ir} = Energy input to be absorbed during rear loading in ft-lb (E'_{ir} in J);

$E_{ir} = 0.47\ W$ ($E'_{ir} = 0.14\ W'$);

L = Static load, lbf [pounds force], (N) [newtons];

D = Deflection under L, in. (mm);

L-D = Static load-deflection diagram;

L_{max} = Maximum observed static load;

Load Limit = Point on a continuous L-D curve where the observed static load is 0.8 L_{max} on the down slope of the curve (see Figure C–5);

E_u = Strain energy absorbed by the frame in ft-lb (J); area under the L-D curve;

FER = Factor of energy ratio;

$FER_{is} = E_u E_{is}$;

$FER_{ir} = E_u E_{ir}$;

P_b = Maximum observed force in mounting connection under a static load, L lbf (N);

P_u = Ultimate force capacity of a mounting connection, lbf (N);

FSB = Design margin for a mounting connection; and

$FSB = P_u/P_b$

(iii) The test procedures shall be as follows:

(A) Apply the rear load according to Figure C–3, and record L and D simultaneously. Rear-load application shall be distributed uniformly on the frame over an area perpendicular to the direction of load application, no greater than 160 sq. in. (1,032 sq. cm) in size, with the largest dimension no greater than 27 in. (686 mm). The load shall be applied to the upper extremity of the frame at the point that is midway between the center of the frame and the inside of the frame upright. When no structural cross member exists at the rear of the frame, a substitute test beam that does not add strength to the frame may be used to complete this test procedure. The test shall be stopped when:

(*1*) The strain energy absorbed by the frame is equal to or greater than the required input energy E_{ir}; or

(*2*) Deflection of the frame exceeds the allowable deflection (see paragraph (e)(1)(i) of this section); or

(*3*) Frame load limit occurs before the allowable deflection is reached in rear load (see Figure C–5).

(B) Using data obtained under paragraph (d)(2)(iii)(A) of this section, construct the *L-D* diagram shown in Figure C–5;

(C) Calculate E_{ir};

(D) Calculate FER_{ir};

(E) Calculate *FSB* as required by paragraph (d)(2)(i)(C) of this section;

(F) Apply the side-load tests on the same frame, and record *L* and *D* simultaneously. Side-load application shall be at the upper extremity of the frame at a 90° angle to the centerline of the vehicle. The side load shall be applied to the longitudinal side farthest from the point of rear-load application. Apply side load *L* as shown in Figure C–2. The test shall be stopped when:

(*1*) The strain energy absorbed by the frame is equal to or greater than the required input energy E_{is}; or

(*2*) Deflection of the frame exceeds the allowable deflection (see paragraph (e)(1)(i) of this section); or

(*3*) Frame load limit occurs before the allowable deflection is reached in side load (see Figure C–5).

(G) Using data obtained in paragraph (d)(2)(iii)(F) of this section, construct the *L-D* diagram as shown in Figure C–5;

(H) Calculate E_{is};

(I) Calculate FER_{is}; and

(J) Calculate *FSB* as required by paragraph (d)(2)(i)(C) of this section.

(3) *Dynamic test procedure.* (i) The following test conditions shall be met:

(A) The protective frame and tractor shall be tested at the weight defined by 29 CFR 1928.51(a);

(B) The dynamic loading shall be accomplished by using a 4,410-lb (2,000-kg) weight acting as a pendulum. The impact face of the weight shall be 27 ±1 in. by 27 ±1 in. (686 ±25 mm by 686 ±25 mm), and shall be constructed so that its center of gravity is within 1.0 in. (25.4 mm) of its geometric center. The weight shall be suspended from a pivot point 18 to 22 ft (5.5 to 6.7 m) above the point of impact on the frame, and shall be conveniently and safely adjustable for height (see Figure C–6);

(C) For each phase of testing, the tractor shall be restrained from moving when the dynamic load is applied. The restraining members shall have strength no less than, and elasticity no greater than, that of 0.50-in. (12.7-mm) steel cable. Points of attachment for the restraining members shall be located an appropriate distance behind the rear axle and in front of the front axle to provide a 15° to 30° angle between a restraining cable and the horizontal. For impact from the rear, the restraining cables shall be located in the plane in which the center of gravity of the pendulum will swing, or alternatively, two sets of symmetrically located cables may be used at lateral locations on the tractor. For impact from the side, restraining cables shall be used as shown in Figures C–8 and C–9;

(D) The front and rear wheel-tread settings, when adjustable, shall be at the position nearest to halfway between the minimum and maximum settings obtainable on the vehicle. When only two settings are obtainable, the minimum setting shall be used. The tires shall have no liquid ballast, and shall be inflated to the maximum operating pressure recommended by the manufacturer. With the specified tire inflation, the restraining cable shall be tightened to provide tire deflection of 6 to 8 percent of the nominal tire-section width. After the vehicle is restrained properly, a wooden beam no less than 6-in. × 6-in. (150-mm × 150-mm) in cross section shall be driven tightly against the appropriate wheels and clamped. For the test to the side, an additional wooden beam shall be placed as a prop against the wheel nearest to the operator's station, and shall be secured to the base so that it is held tightly against the wheel rim during impact. The length of this beam shall be chosen so that it is at an angle of 25° to 40° to the horizontal when it is positioned against the wheel rim. It shall have a length 20 to 25 times its depth, and a width two to three times its depth (see Figures C–8 and C–9);

(E) Means shall be provided for indicating the maximum instantaneous deflection along the line of impact. A simple friction device is illustrated in Figure C–4;

(F) No repairs or adjustments shall be made during the test; and

(G) When any cables, props, or blocking shift or break during the test, the test shall be repeated.

(ii) H = Vertical height of the center of gravity of a 4,410-lb (2,000-kg) weight in in. (H' in mm). The weight shall be pulled back so that the height of its center of gravity above the point of impact is: $H = 4.92 + 0.00190\ W$ ($H' = 125 \pm 0.170\ W'$) (see Figure C–7).

(iii) The test procedures shall be as follows:

(A) The frame shall be evaluated by imposing dynamic loading from the rear, followed by a load to the side on the same frame. The pendulum swinging from the height determined by paragraph (d)(3)(ii) of this section shall be used to impose the dynamic load. The position of the pendulum shall be so selected that the initial point of impact on the frame is in line with the arc of travel of the center of gravity of the pendulum. When a quick-release mechanism is used, it shall not influence the attitude of the block;

(B) *Impact at rear*. The tractor shall be restrained properly according to paragraphs (d)(3)(i)(C) and (d)(3)(i)(D) of this section. The tractor shall be positioned with respect to the pivot point of the pendulum so that the pendulum is 20° from the vertical prior to impact as shown in Figure C–8. The impact shall be applied to the upper extremity of the frame at the point that is midway between the centerline of the frame and the inside of the frame upright. When no structural cross member exists at the rear of the frame, a substitute test beam that does not add to the strength of the frame may be used to complete the test procedure; and

(C) *Impact at side*. The blocking and restraining shall conform to paragraphs (d)(3)(i)(C) and (d)(3)(i)(D) of this section. The center point of impact shall be at the upper extremity of the frame at a point most likely to hit the ground first, and at a 90° to the centerline of the vehicle (see Figure C–9). The side impact shall be applied to the longitudinal side farthest from the point of rear impact.

(4) *Field-upset test procedure*. (i) The following test conditions shall be met:

(A) The tractor shall be tested at the weight defined in 29 CFR 1928.51(a);

(B) The following provisions address soil bank test conditions.

(1) The test shall be conducted on a dry, firm soil bank. The soil in the impact area shall have an average cone index in the 0-in. to 6-in. (0-mm to 152-mm) layer of not less than 150. Cone index shall be determined according to American Society of Agricultural Engineers (''ASAE'') recommendation ASAE R313.1–1971 (''Soil cone penetrometer''), as reconfirmed in 1975, which is incorporated by reference. The incorporation by reference was approved by the Director of the Federal Register in accordance with 5 U.S.C. 552(a) and 1 CFR part 51. The path of vehicle travel shall be 12° ±2° to the top edge of the bank.

(2) ASAE recommendation R313.1–1971, as reconfirmed in 1975, appears in the 1977 Agricultural Engineers Yearbook, or it may be examined at: Any OSHA Regional Office; the OSHA Docket Office, U.S. Department of Labor, 200 Constitution Avenue, NW., Room N–2625, Washington, DC 20210 (telephone: (202) 693–2350 (TTY number: (877) 889–5627)); or the National Archives and Records Administration (''NARA''). (For information on the availability of this material at NARA, telephone (202) 741–6030 or access the NARA Web site at *http://www.archives.gov/federal_register/code_of_federal_regulations/ibr_locations.html*.) Copies may be purchased from the American Society of Agricultural Engineers, 2950 Niles Road, St. Joseph, MI 49085.

(C) An 18-in. (457-mm) high ramp (see Figure C–10) shall be used to assist in upsetting the vehicle to the side; and

(D) The front and rear wheel-tread settings, when adjustable, shall be at the position nearest to halfway between the minimum and maximum settings obtainable on the vehicle. When only two settings are obtainable, the minimum setting shall be used.

(ii) Field upsets shall be induced to the rear and side as follows:

(A) Rear upset shall be induced by engine power, with the tractor operating in gear to obtain 3 to 5 mph (4.8 to 8.0 kph) at maximum governed engine rpm by driving forward directly up

a minimum slope of 60° ±5° as shown in Figure C–11, or by an alternative equivalent means. The engine clutch may be used to aid in inducing the upset; and

(B) To induce side upset, the tractor shall be driven under its own power along the specified path of travel at a minimum speed of 10 mph (16 kph), or at maximum vehicle speed when under 10 mph (16 kph), and over the ramp as described in paragraph (d)(4)(i)(C) of this section.

(e) *Performance requirements*—(1) *General requirements*. (i) The frame, overhead weather shield, fenders, or other parts in the operator area may be deformed in these tests, but shall not shatter or leave sharp edges exposed to the operator, or encroach on the dimensions shown in Figures C–2 and C–3, and specified as follows:

d = 2 in. (51 mm) inside of the frame upright to the vertical centerline of the seat;
e = 30 in. (762 mm) at the longitudinal centerline;
f = Not greater than 4 in. (102 mm) to the rear edge of the crossbar, measured forward of the seat-reference point (''*SRP*'');
g = 24 in. (610 mm) minimum; and
m = Not greater than 12 in. (305 mm), measured from the seat-reference point to the forward edge of the crossbar.

(ii) The protective structure and connecting fasteners must pass the static or dynamic tests described in paragraphs (d)(2), (d)(3), or (d)(4) of this section at a metal temperature of 0 °F (−18 °C) or below, or exhibit Charpy V-notch impact strengths as follows:

10-mm × 10-mm (0.394-in. × 0.394-in.) specimen: 8.0 ft-lb (10.8 J) at −20 °F (−30 °C);
10-mm × 7.5-mm (0.394-in. × 0.296-in.) specimen: 7.0 ft-lb (9.5 J) at −20 °F (−30 °C);
10-mm × 5-mm (0.394-in. × 0.197-in.) specimen: 5.5 ft-lb (7.5 J) at −20 °F (−30 °C); or
10-mm × 2.5-mm (0.394-in. × 0.098-in.) specimen: 4.0 ft-lb (5.5 J) at −20 °F (−30 °C).

Specimens shall be longitudinal and taken from flat stock, tubular, or structural sections before forming or welding for use in the frame. Specimens from tubular or structural sections shall be taken from the middle of the side of greatest dimension, not to include welds.

(2) *Static test-performance requirements*. In addition to meeting the requirements of paragraph (e)(1) of this section for both side and rear loads, FER_{is} and FER_{ir}, shall be greater than 1.0, and when the ROPS contains one or two upright frames only, *FSB* shall be greater than 1.3.

(3) *Dynamic test-performance requirements*. The structural requirements shall be met when the dimensions in paragraph (e)(1) of this section are used in both side and rear loads.

(4) *Field-upset test performance requirements*. The requirements of paragraph (e)(1) of this section shall be met for both side and rear upsets.

[70 FR 77004, Dec. 29, 2005]

§ 1928.53 Protective enclosures for wheel-type agricultural tractors—test procedures and performance requirements.

(a) *Purpose*. The purpose of this section is to establish the test and performance requirements for a protective enclosure designed for wheel-type agricultural tractors to minimize the frequency and severity of operator injury resulting from accidental upset. General requirements for the protection of operators are specified in 29 CFR 1928.51.

(b) *Types of tests*. All protective enclosures for wheel-type agricultural tractors shall be of a model that has been tested as follows:

(1) *Laboratory test*. A laboratory energy-absorption test, either static or dynamic, under repeatable and controlled loading, to permit analysis of the protective enclosure for compliance with the performance requirements of this standard; and

(2) *Field-upset test*. A field-upset test under controlled conditions, both to the side and rear, to verify the effectiveness of the protective system under actual dynamic conditions. This test may be omitted when:

(i) The analysis of the protective-frame static-energy absorption test results indicates that both FER_{is} and FER_{ir} (as defined in paragraph (d)(2)(ii) of this section) exceed 1.15; or

(ii) The analysis of the protective-frame dynamic-energy absorption test results indicates that the frame can withstand an impact 15 percent greater than the impact it is required to withstand for the tractor weight as shown in Figure C–7.

(c) *Description*. A protective enclosure is a structure comprising a frame and/

or enclosure mounted to the tractor. A typical enclosure is shown in Figure C–12.

(d) *Test procedures*—(1) *General.* (i) The tractor weight used shall be that of the heaviest tractor model on which the protective enclosure is to be used.

(ii) Each test required under this section shall be performed on a protective enclosure with new structural members. Mounting connections of the same design shall be used during each test.

(iii) Instantaneous deflection shall be measured and recorded for each segment of the test; see paragraph (e)(1)(i) of this section for permissible deflections.

(iv) The seat-reference point (''*SRP*'') in Figure C–14 is that point where the vertical line that is tangent to the most forward point at the longitudinal seat centerline of the seat back, and the horizontal line that is tangent to the highest point of the seat cushion, intersect in the longitudinal seat section. The seat-reference point shall be determined with the seat unloaded and adjusted to the highest and most rearward position provided for seated operations of the tractor.

(v) When the centerline of the seat is off the longitudinal center, the protective-enclosure loading shall be on the side with least space between the centerline of the seat and the protective enclosure.

(vi) Low-temperature characteristics of the protective enclosure or its material shall be demonstrated as specified in paragraph (e)(1)(ii) of this section.

(vii) Rear input energy tests (static, dynamic, or field-upset) need not be performed on enclosures mounted to tractors having four driven wheels and more than one-half their unballasted weight on the front wheels.

(viii) Accuracy table:

Measurements	Accuracy
Deflection of the enclosure, in. (mm).	±5 percent of the deflection measured.
Vertical weight, pounds (kg) ..	±5 percent of the weight measured.
Force applied to the enclosure, pounds force (newtons).	±5 percent of the force measured.
Dimensions of the critical zone, in. (mm).	±0.5 in. (12.5 mm).

(ix) When movable or normally removable portions of the enclosure add to structural strength, they shall be placed in configurations that contribute least to structural strength during the test.

(2) *Static test procedure.* (i) The following test conditions shall be met:

(A) The laboratory mounting base shall be the tractor chassis for which the protective enclosure is designed, or its equivalent; and

(B) The protective enclosure shall be instrumented with the necessary equipment to obtain the required load-deflection data at the locations and directions specified in Figures C–13 and C–14.

(ii) The following definitions shall apply:

W = Tractor weight (see 29 CFR 1928.51(a)) in lb (W'' in kg);
E_{is} = Energy input to be absorbed during side loading in ft-lb (E''_{is} in J [joules]);
$E_{is} = 723 + 0.4\ W$ ($E''_{is} = 100 + 0.12\ W''$);
E_{ir} = Energy input to be absorbed during rear loading in ft-lb (E''_{ir} in J);
$E_{ir} = 0.47\ W$ ($E''_{ir} = 0.14\ W''$);
L = Static load, lbf [pounds force], (N) [newtons];
D = Deflection under L, in. (mm);
L–D = Static load-deflection diagram;
L_{max} = Maximum observed static load;
Load Limit = Point on a continuous L–D curve where the observed static load is 0.8 L_{max} on the down slope of the curve (see Figure C–5);
E_u = Strain energy absorbed by the protective enclosure in ft-lbs (J); area under the L–D curve;
FER = Factor of energy ratio;
$FER_{is} = E_u/E_{is}$; and
$FER_{ir} = E_u/E_{ir}$.

(iii) The test procedures shall be as follows:

(A) When the protective-frame structures are not an integral part of the enclosure, the direction and point of load application for both side and rear shall be the same as specified in 29 CFR 1928.52(d)(2);

(B) When the protective-frame structures are an integral part of the enclosure, apply the rear load according to Figure C–14, and record L and D simultaneously. Rear-load application shall be distributed uniformly on the frame structure over an area perpendicular to the load application, no greater than 160 sq. in. (1,032 sq. cm) in size, with the largest dimension no greater than 27

in. (686 mm). The load shall be applied to the upper extremity of the structure at the point that is midway between the centerline of the protective enclosure and the inside of the protective structure. When no structural cross member exists at the rear of the enclosure, a substitute test beam that does not add strength to the structure may be used to complete this test procedure. The test shall be stopped when:

(*1*) The strain energy absorbed by the structure is equal to or greater than the required input energy E_{ir}; or

(*2*) Deflection of the structure exceeds the allowable deflection (see paragraph (e)(1)(i) of this section); or

(*3*) The structure load limit occurs before the allowable deflection is reached in rear load (see Figure C–5);

(C) Using data obtained in paragraph (d)(2)(iii)(B) of this section, construct the *L-D* diagram for rear loads as shown in Figure C–5;

(D) Calculate E_{ir};

(E) Calculate FER_{ir};

(F) When the protective-frame structures are an integral part of the enclosure, apply the side load according to Figure C–13, and record *L* and *D* simultaneously. Static side-load application shall be distributed uniformly on the frame over an area perpendicular to the direction of load application, and no greater than 160 sq. in. (1,032 sq. cm) in size, with the largest dimension no greater than 27 in. (686 mm). Side-load application shall be at a 90° angle to the centerline of the vehicle. The center of the side-load application shall be located between point *k*, 24 in. (610 mm) forward of the seat-reference point, and point *l*, 12 in. (305 mm) rearward of the seat-reference point, to best use the structural strength (see Figure C–13). This side load shall be applied to the longitudinal side farthest from the point of rear-load application. The test shall be stopped when:

(*1*) The strain energy absorbed by the structure is equal to or greater than the required input energy E_{is}; or

(*2*) Deflection of the structure exceeds the allowable deflection (see paragraph (e)(1)(i) of this section); or

(*3*) The structure load limit occurs before the allowable deflection is reached in side load (see Figure C–5);

(G) Using data obtained in paragraph (d)(2)(iii)(F) of this section, construct the *L-D* diagram for the side load as shown in Figure C–5;

(H) Calculate FER_{is}; and

(I) Calculate FER_{ir}.

(3) *Dynamic test procedure.* (i) The following test conditions shall be met:

(A) The protective enclosure and tractor shall be tested at the weight defined by 29 CFR 1928.51(a);

(B) The dynamic loading shall be accomplished by using a 4,410-lb (2,000-kg) weight acting as a pendulum. The impact face of the weight shall be 27 ±1 in. by 27 ±1 in. (686 ±25 mm by 686 ±25 mm), and shall be constructed so that its center of gravity is within 1.0 in. (25.4 mm) of its geometric center. The weight shall be suspended from a pivot point 18 to 22 ft (5.5 to 6.7 m) above the point of impact on the enclosure, and shall be conveniently and safely adjustable for height (see Figure C–6);

(C) For each phase of testing, the tractor shall be restrained from moving when the dynamic load is applied. The restraining members shall have strength no less than, and elasticity no greater than, that of 0.50-in. (12.7-mm) steel cable. Points of attachment for the restraining members shall be located an appropriate distance behind the rear axle and in front of the front axle to provide a 15° to 30° angle between the restraining cable and the horizontal. For impact from the rear, the restraining cables shall be located in the plane in which the center of gravity of the pendulum will swing, or alternatively, two sets of symmetrically located cables may be used at lateral locations on the tractor. For the impact from the side, restraining cables shall be used as shown in Figures C–15 and C–16;

(D) The front and rear wheel-tread settings, when adjustable, shall be at the position nearest to halfway between the minimum and maximum settings obtainable on the vehicle. When only two settings are obtainable, the minimum setting shall be used. The tires shall have no liquid ballast, and shall be inflated to the maximum operating pressure recommended by the manufacturer. With specified tire inflation, the restraining cable shall be tightened to provide tire deflection of 6

to 8 percent of nominal tire section width. After the vehicle is retrained properly, a wooden beam no smaller than 6-in. × 6-in. (150-mm × 150-mm) cross-section shall be driven tightly against the appropriate wheels and clamped. For the test to the side, an additional wooden beam shall be placed as a prop against the wheel nearest the operator's station, and shall be secured to the base so that it is held tightly against the wheel rim during impact. The length of this beam shall be chosen so that it is at an angle of 25° to 40° to the horizontal when it is positioned against the wheel rim. It shall have a length 20 to 25 times its depth, and a width two to three times its depth (see Figures C–15 and C–16);

(E) Means shall be provided for indicating the maximum instantaneous deflection along the line of impact. A simple friction device is illustrated in Figure C–4;

(F) No repair or adjustments shall be made during the test; and

(G) When any cables, props, or blocking shift or break during the test, the test shall be repeated.

(ii) H = Vertical height of the center of gravity of a 4,410-lb (2,000-kg) weight in in. (H' in mm). The weight shall be pulled back so that the height of its center of gravity above the point of impact is: $H = 4.92 + 0.00190\ W$ ($H' = 125 + 0.107\ W'$) (see Figure C–7).

(iii) The test procedures shall be as follows:

(A) The enclosure structure shall be evaluated by imposing dynamic loading from the rear, followed by a load to the side on the same enclosure structure. The pendulum swinging from the height determined by paragraph (d)(3)(ii) of this section shall be used to impose the dynamic load. The position of the pendulum shall be so selected that the initial point of impact on the protective structure is in line with the arc of travel of the center of gravity of the pendulum. When a quick-release mechanism is used, it shall not influence the attitude of the block;

(B) *Impact at rear*. The tractor shall be restrained properly according to paragraphs (d)(3)(i)(C) and (d)(3)(i)(D) of this section. The tractor shall be positioned with respect to the pivot point of the pendulum so that the pendulum is 20° from the vertical prior to impact as shown in Figure C–15. The impact shall be applied to the upper extremity of the enclosure structure at the point that is midway between the centerline of the enclosure structure and the inside of the protective structure. When no structural cross member exists at the rear of the enclosure structure, a substitute test beam that does not add to the strength of the structure may be used to complete the test procedure; and

(C) *Impact at side*. The blocking and restraining shall conform to paragraphs (d)(3)(i)(C) and (d)(3)(i)(D) of this section. The center point of impact shall be at the upper extremity of the enclosure at a 90° angle to the centerline of the vehicle, and located between a point k, 24 in. (610 mm) forward of the seat-reference point, and a point l, 12 in. (305 mm) rearward of the seat-reference point, to best use the structural strength (see Figure C–13). The side impact shall be applied to the longitudinal side farthest from the point of rear impact.

(4) *Field-upset test procedure*. (i) The following test conditions shall be met:

(A) The tractor shall be tested at the weight defined in 29 CFR 1928.51(a);

(B) The following provisions address soil bank test conditions.

(1) The test shall be conducted on a dry, firm soil bank. The soil in the impact area shall have an average cone index in the 0-in. to 6-in. (0-mm to 152-mm) layer of not less than 150. Cone index shall be determined according to American Society of Agricultural Engineers (''ASAE'') recommendation ASAE R313.1–1971 (''Soil cone penetrometer''), as reconfirmed in 1975, which is incorporated by reference. The incorporation by reference was approved by the Director of the Federal Register in accordance with 5 U.S.C. 552(a) and 1 CFR part 51. The path of vehicle travel shall be 12° ±2° to the top edge of the bank.

(2) ASAE recommendation R313.1–1971, as reconfirmed in 1975, appears in the 1977 Agricultural Engineers Yearbook, or it may be examined at: Any OSHA Regional Office; the OSHA Docket Office, U.S. Department of Labor, 200 Constitution Avenue, NW., Room

N–2625, Washington, DC 20210 (telephone: (202) 693–2350 (TTY number: (877) 889–5627)); or the National Archives and Records Administration (''NARA''). (For information on the availability of this material at NARA, telephone (202) 741–6030 or access the NARA Web site at *http://www.archives.gov/federal__register/code__of__federal__regulations/ibr__locations.html.*) Copies may be purchased from the American Society of Agricultural Engineers 2950 Niles Road, St. Joseph, MI 49085.

(C) An 18-in. (457 mm) high ramp (see Figure C–10) shall be used to assist in upsetting the vehicle to the side; and

(D) The front and rear wheel-tread settings, when adjustable, shall be at the position nearest to halfway between the minimum and maximum settings obtainable on the vehicle. When only two settings are obtainable, the minimum setting shall be used.

(ii) Field upsets shall be induced to the rear and side.

(A) Rear upset shall be induced by engine power, with the tractor operating in gear to obtain 3 to 5 mph (4.8 to 8.0 kph) at maximum governed engine rpm by driving forward directly up a minimum slope of 60° ±5° as shown in Figure C–11, or by an alternate equivalent means. The engine clutch may be used to aid in inducing the upset; and

(B) To induce side upset, the tractor shall be driven under its own power along the specified path of travel at a minimum speed of 10 mph (16 kph), or at maximum vehicle speed when under 10 mph (16 kph), and over the ramp as described in paragraph (d)(4)(i)(C) of this section.

(e) *Performance requirements*—(1) *General requirements.* (i) The protective enclosure structural members or other parts in the operator area may be deformed in these tests, but shall not shatter or leave sharp edges exposed to the operator. They shall not encroach on a transverse plane passing through points *d* and *f* within the projected area defined by dimensions *d*, *e*, and *g*, or on the dimensions shown in Figures C–13 and C–14, as follows:

d = 2 in. (51 mm) inside of the protective structure to the vertical centerline of the seat;

e = 30 in. (762 mm) at the longitudinal centerline;

f = Not greater than 4 in. (102 mm) measured forward of the seat-reference point (''*SRP*'') at the longitudinal centerline as shown in Figure C–14;

g = 24 in. (610 mm) minimum;

h = 17.5 in. (445 mm) minimum; and

j = 2.0 in. (51 mm) measured from the outer periphery of the steering wheel.

(ii) The protective structure and connecting fasteners must pass the static or dynamic tests described in paragraphs (d)(2), (d)(3), or (d)(4) of this section at a metal temperature of 0 °F (−8 °C) or below, or exhibit Charpy V-notch impact strengths as follows:

10-mm × 10-mm (0.394-in. × 0.394-in.) specimen: 8.0 ft-lb (10.8 J) at −20 °F (−30 °C);

10-mm × 7.5-mm (0.394-in. × 0.296-in.) specimen: 7.0 ft-lb (9.5 J) at −20 °F (−30 °C);

10-mm × 5-mm (0.394-in. × 0.197-in.) specimen: 5.5 ft-lb (7.5 J) at −20 °F (−30 °C); or

10-mm × 2.5-mm (0.394-in. × 0.098-in.) specimen: 4.0 ft-lb (5.5 J) at −20 °F (−30 °C).

Specimens shall be longitudinal and taken from flat stock, tubular, or structural sections before forming or welding for use in the protective enclosure. Specimens from tubular or structural sections shall be taken from the middle of the side of greatest dimension, not to include welds.

(iii) The following provisions address glazing requirements.

(A) Glazing shall conform to the requirements contained in Society of Automotive Engineers (''SAE'') standard J674–1963 (''Safety glazing materials''), which is incorporated by reference. The incorporation by reference was approved by the Director of the Federal Register in accordance with 5 U.S.C. 552(a) and 1 CFR part 51.

(B) SAE standard J674–1963 appears in the 1965 SAE Handbook, or it may be examined at: any OSHA Regional Office; the OSHA Docket Office, U.S. Department of Labor, 200 Constitution Avenue, NW., Room N–2625, Washington, DC 20210 (telephone: (202) 693–2350 (TTY number: (877) 889–5627)); or the National Archives and Records Administration (''NARA''). (For information on the availability of this material at NARA, telephone (202) 741–6030 or access the NARA Web site at *http://www.archives.gov/federal__register/code__of__federal__regulations/ibr__locations.html.*) Copies may be purchased from the Society of Automotive

Engineers, 400 Commonwealth Drive, Warrendale, Pennsylvania 15096–0001.

(iv) Two or more operator exits shall be provided and positioned to avoid the possibility of both being blocked by the same accident.

(2) *Static test-performance requirements*. In addition to meeting the requirements of paragraph (e)(1) of this section for both side and rear loads, FER_{is} and FER_{ir} shall be greater than 1.0.

(3) *Dynamic test-performance requirements*. The structural requirements shall be met when the dimensions in paragraph (e)(1) of this section are used in both side and rear loads.

(4) *Field-upset test performance requirements*. The requirements of paragraph (e)(1) of this section shall be met for both side and rear upsets.

[70 FR 77004, Dec. 29, 2005, as amended at 71 FR 41145, July 20, 2006]

APPENDIX A TO SUBPART C OF PART 1928—EMPLOYEE OPERATING INSTRUCTIONS

1. Securely fasten your seat belt if the tractor has a ROPS.
2. Where possible, avoid operating the tractor near ditches, embankments, and holes.
3. Reduce speed when turning, crossing slopes, and on rough, slick, or muddy surfaces.
4. Stay off slopes too steep for safe operation.
5. Watch where you are going, especially at row ends, on roads, and around trees.
6. Do not permit others to ride.
7. Operate the tractor smoothly—no jerky turns, starts, or stops.
8. Hitch only to the drawbar and hitch points recommended by tractor manufacturers.
9. When tractor is stopped, set brakes securely and use park lock if available.

APPENDIX B TO SUBPART C OF PART 1928—FIGURES C–1 THROUGH C–16

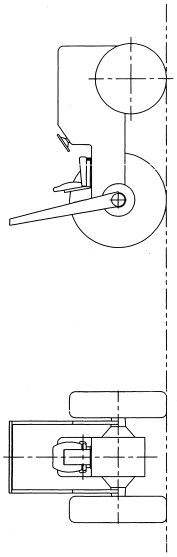

FIGURE C-1 - TRACTOR WITH TYPICAL PROTECTIVE FRAME.

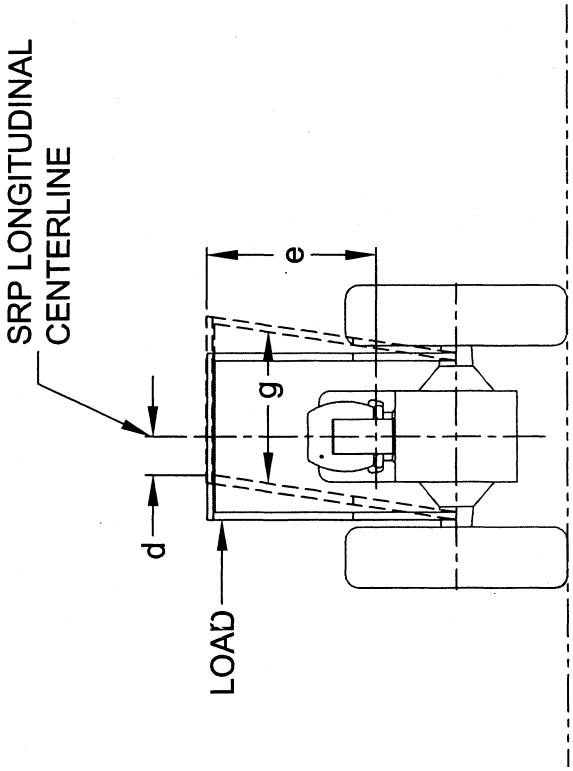

FIGURE C-2 - SIDE LOAD APPLICATION.

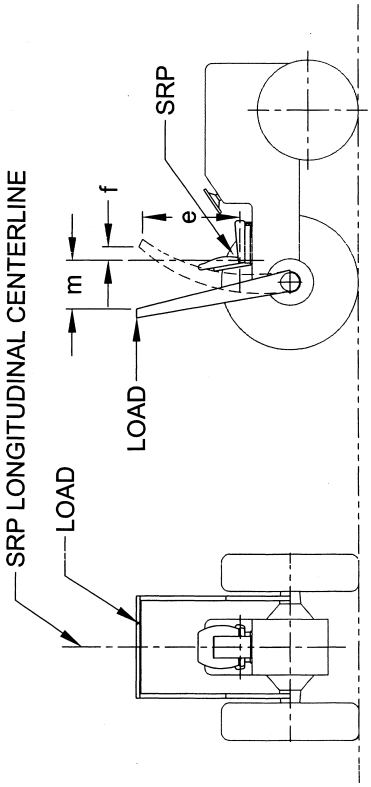

FIGURE C-3 - REAR LOAD APPLICATION.

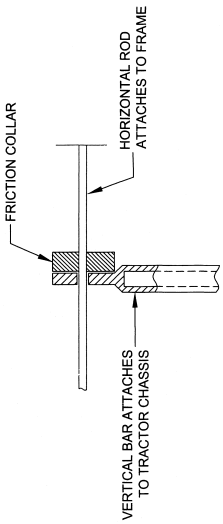

FIGURE C-4 - METHOD OF MEASURING INSTANTANEOUS DEFLECTION.

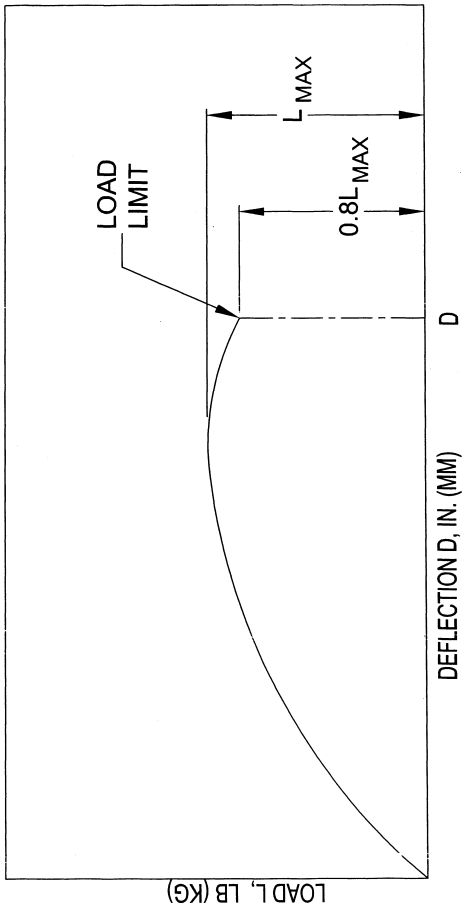

FIGURE C-5 - TYPICAL L-D DIAGRAM.

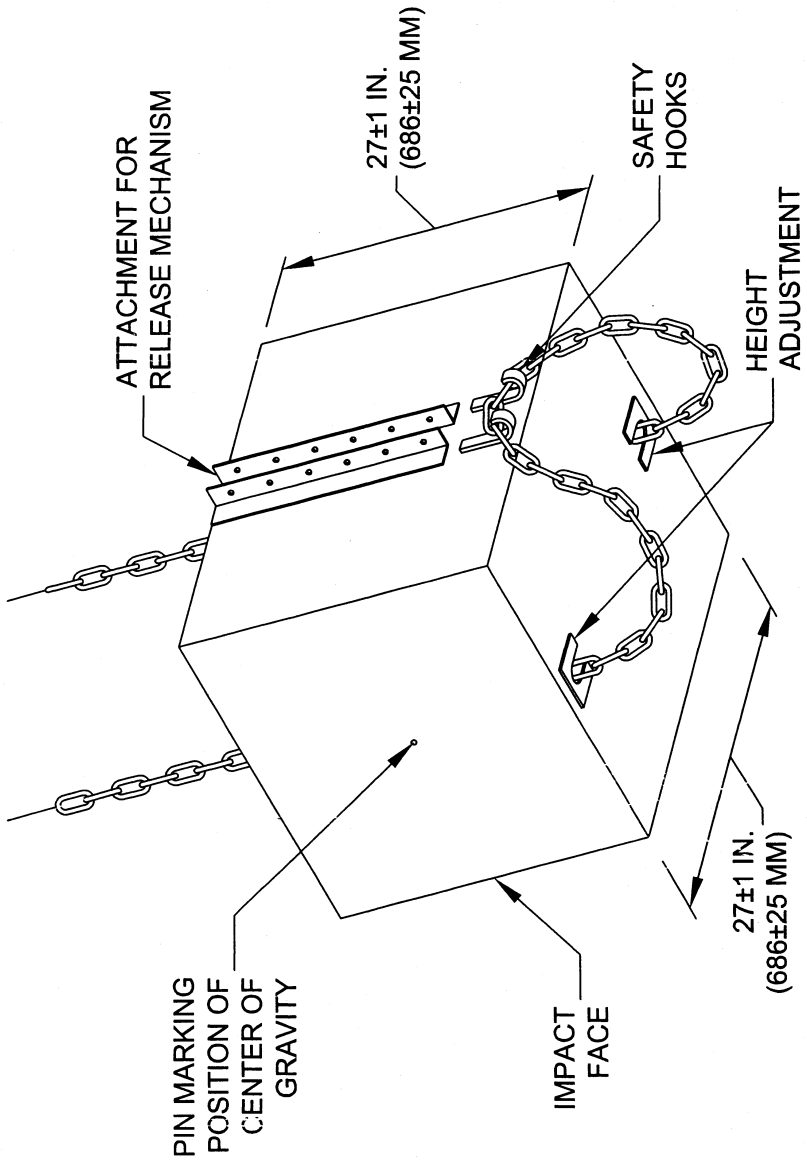

FIGURE C-6 - PENDULUM.

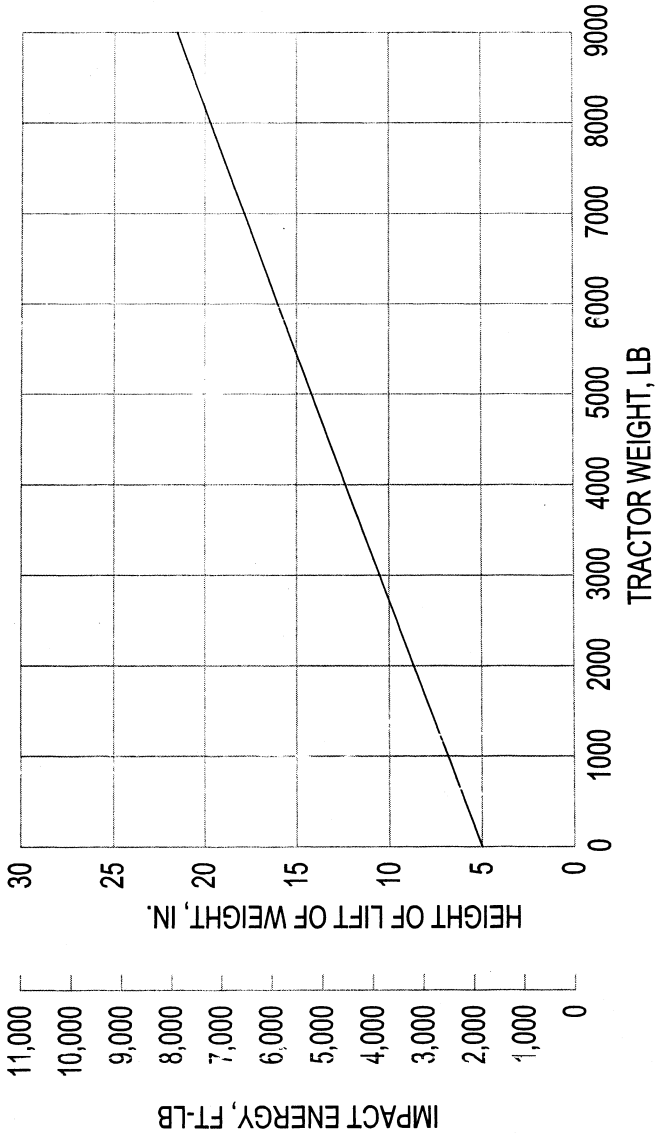

NOTATION OF FORMULAE
H=4.92+0.00190W or H'=125+0.107W'
W=tractor weight specified by 29 CFR 1928.51(a) in lbs (W' in kg).

FIGURE C-7 - IMPACT ENERGY AND CORRESPONDING LIFT HEIGHT OF 4,410 LB (2,000 kg) WEIGHT.

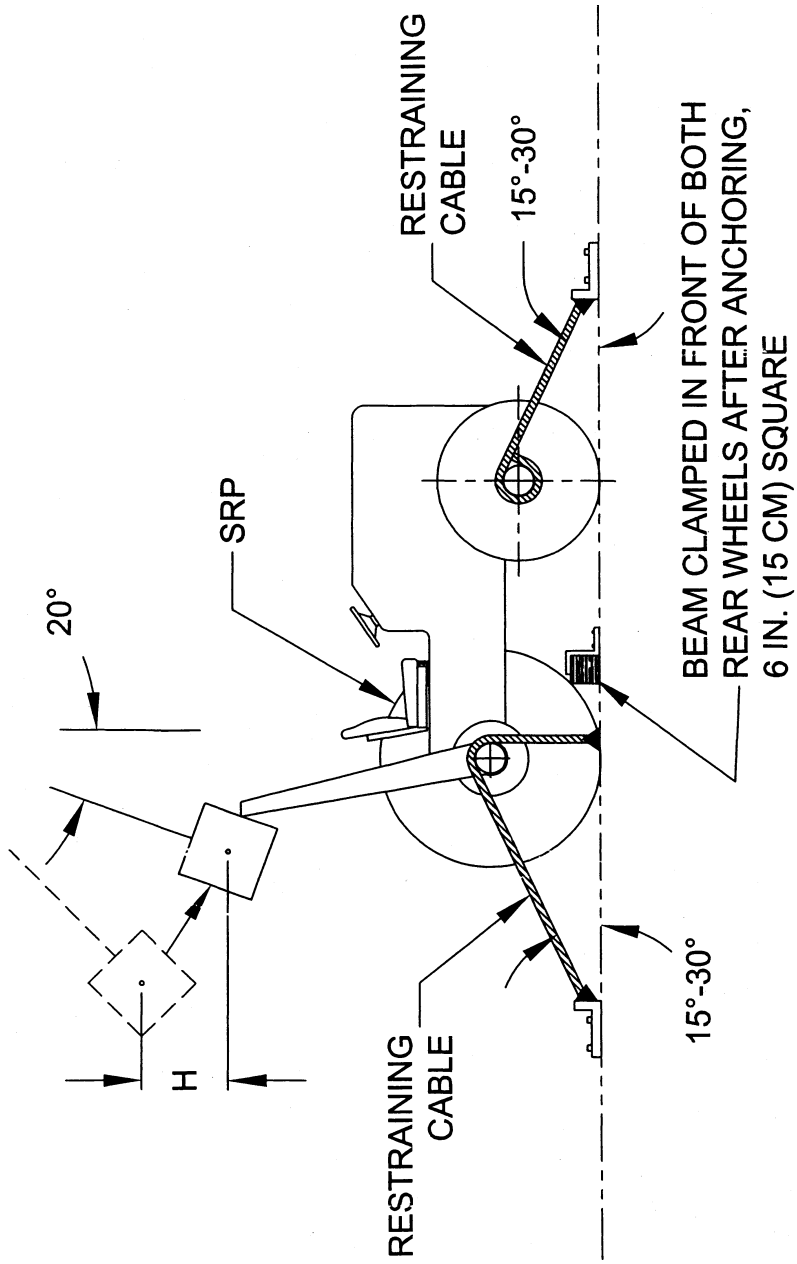

FIGURE C-8 - REAR IMPACT APPLICATION.

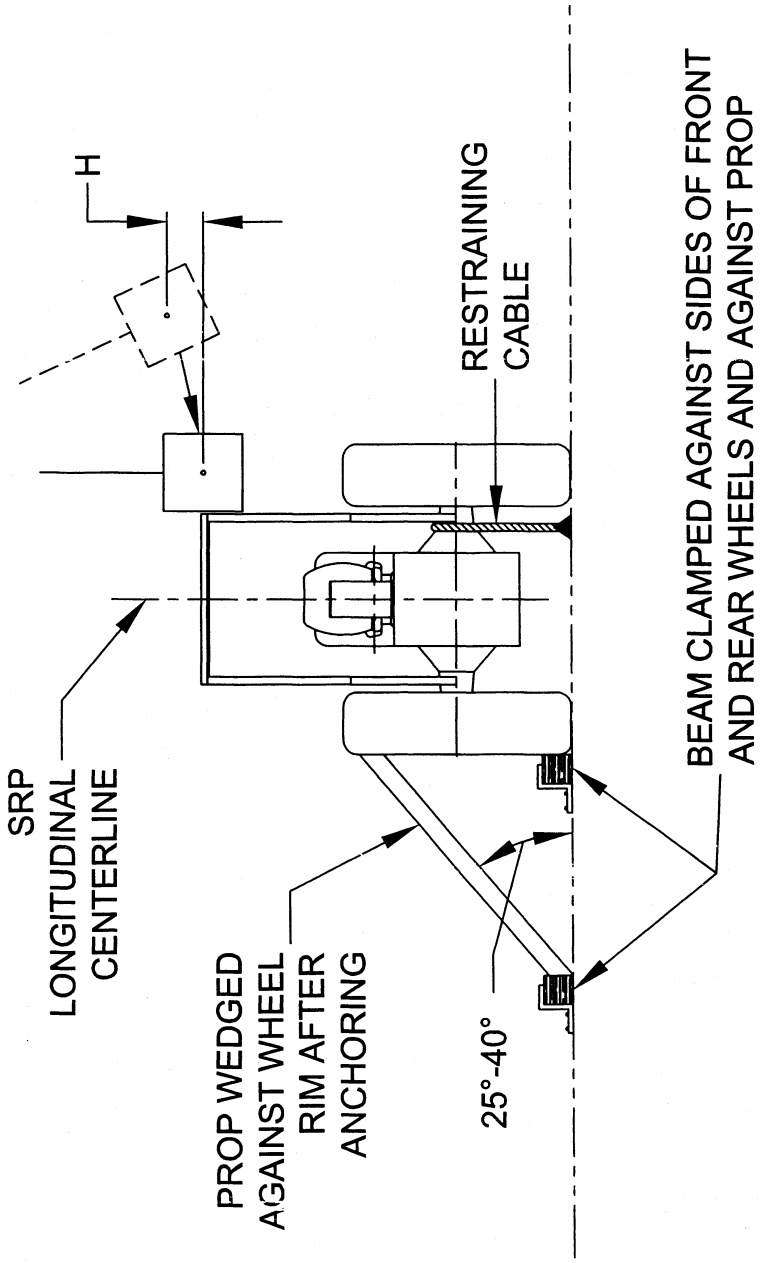

FIGURE C-9 - SIDE IMPACT APPLICATION.

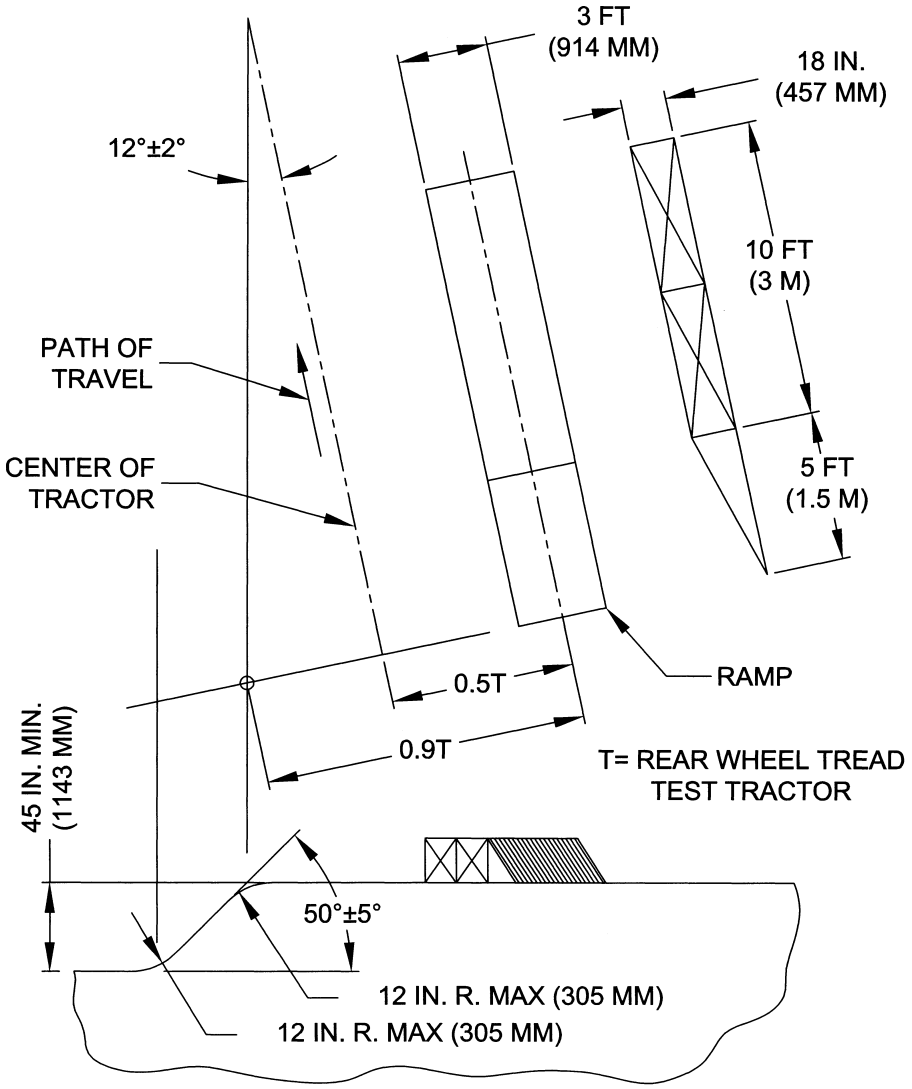

FIGURE C-10 - SIDE OVERTURN BANK AND RAMP.

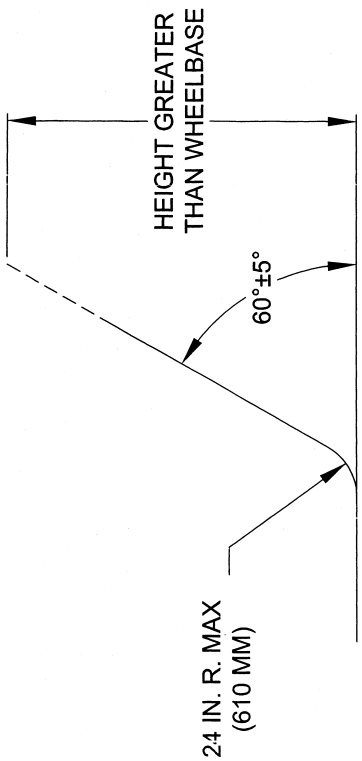

FIGURE C-11 - TYPICAL REAR OVERTURN BANK.

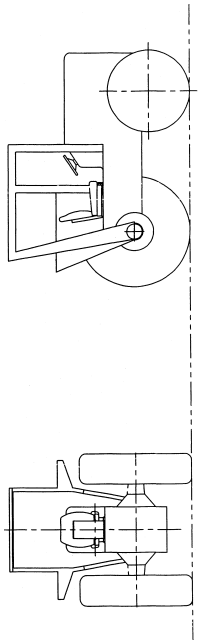

FIGURE C-12 - TRACTOR WITH TYPICAL PROTECTIVE ENCLOSURE.

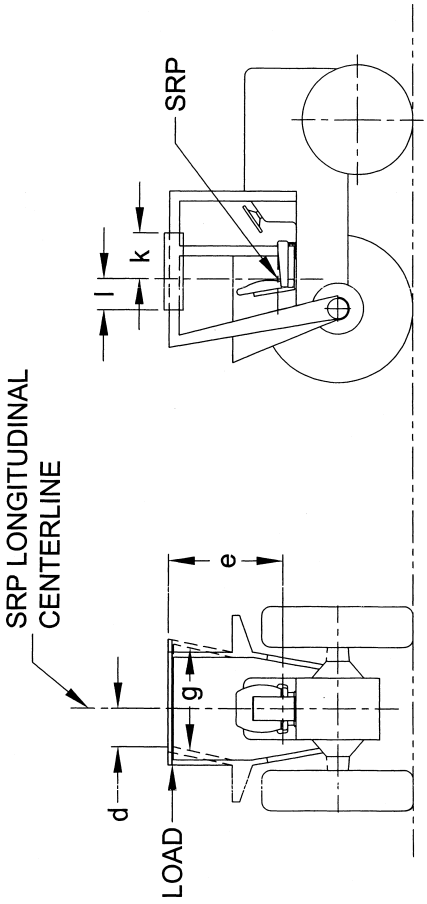

FIGURE C-13 - SIDE LOAD APPLICATION.

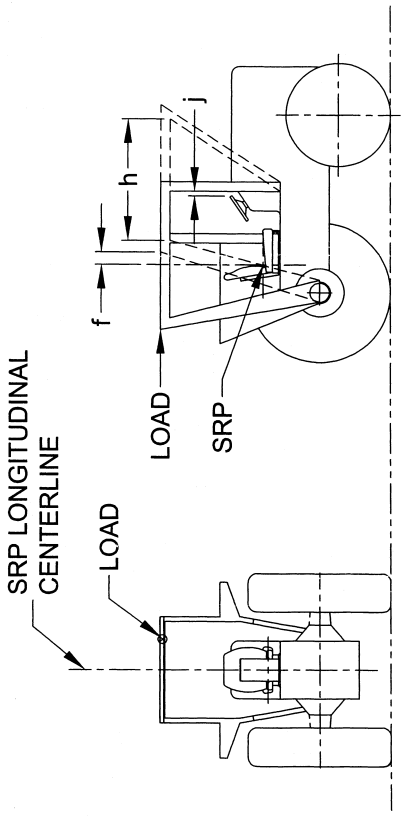

FIGURE C-14 - REAR LOAD APPLICATION.

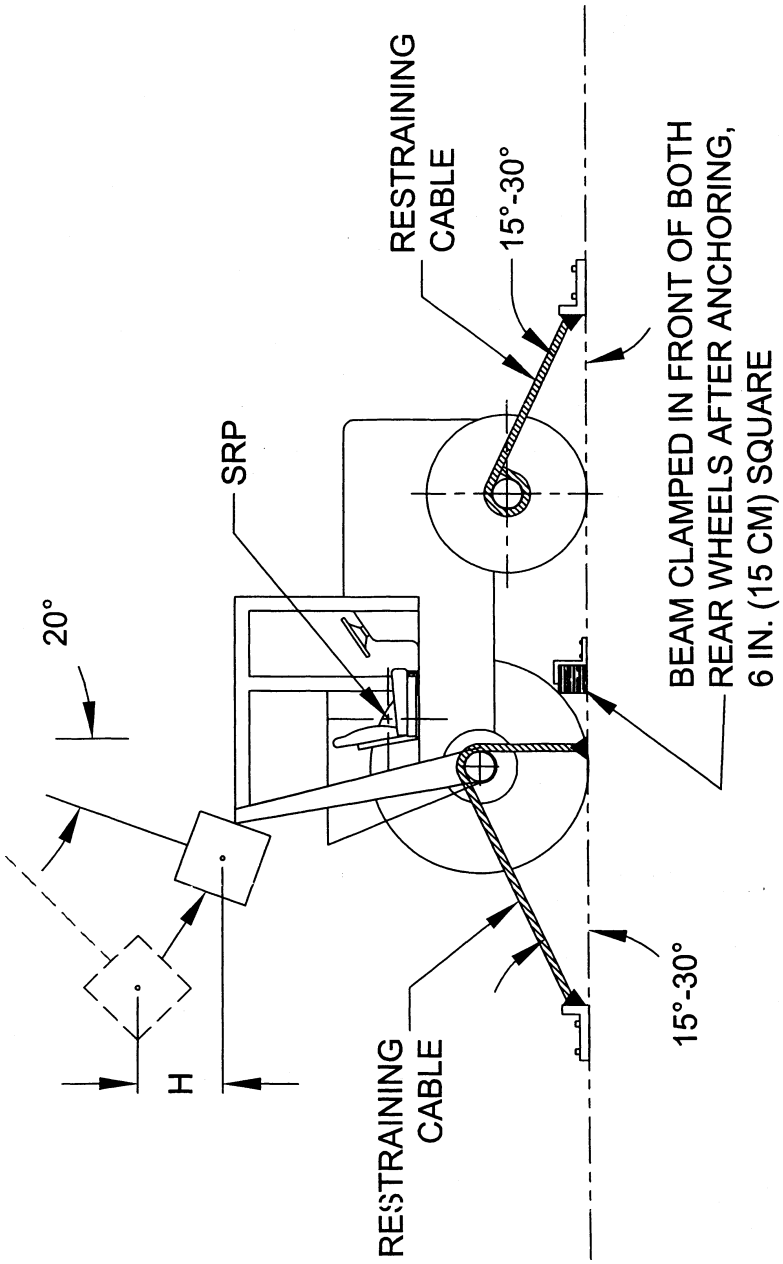

FIGURE C-15 - REAR IMPACT APPLICATION.

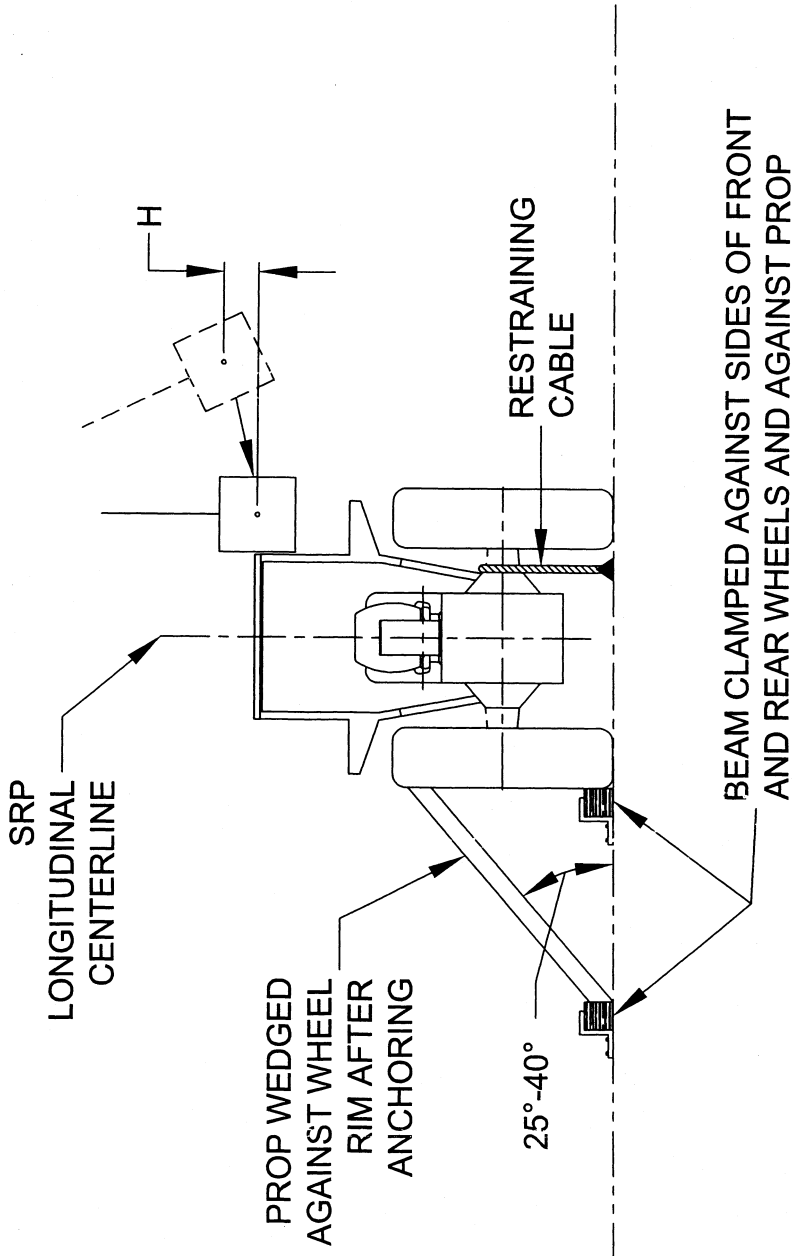

FIGURE C-16 - SIDE IMPACT APPLICATION.

[71 FR 41146, July 20, 2006]

Subpart D—Safety for Agricultural Equipment

§ 1928.57 Guarding of farm field equipment, farmstead equipment, and cotton gins.

(a) *General*—(1) *Purpose*. The purpose of this section is to provide for the protection of employees from the hazards associated with moving machinery parts of farm field equipment, farmstead equipment, and cotton gins used in any agricultural operation.

(2) *Scope*. Paragraph (a) of this section contains general requirements which apply to all covered equipment. In addition, paragraph (b) of this section applies to farm field equipment, paragraph (c) of this section applies to farmstead equipment, and paragraph (d) of this section applies to cotton gins.

(3) *Application*. This section applies to all farm field equipment, farmstead equipment, and cotton gins, except that paragraphs (b)(2), (b)(3), and (b)(4)(ii)(A), and (c)(2), (c)(3), and (c)(4)(ii)(A) do not apply to equipment manufactured before October 25, 1976.

(4) *Effective date*. This section takes effect on October 25, 1976, except that paragraph (d) of this section is effective on June 30, 1977.

(5) *Definitions—Cotton gins* are systems of machines which condition seed cotton, separate lint from seed, convey materials, and package lint cotton.

Farm field equipment means tractors or implements, including self-propelled implements, or any combination thereof used in agricultural operations.

Farmstead equipment means agricultural equipment normally used in a stationary manner. This includes, but is not limited to, materials handling equipment and accessories for such equipment whether or not the equipment is an integral part of a building.

Ground driven components are components which are powered by the turning motion of a wheel as the equipment travels over the ground.

A *guard* or *shield* is a barrier designed to protect against employee contact with a hazard created by a moving machinery part.

Power take-off shafts are the shafts and knuckles between the tractor, or other power source, and the first gear set, pulley, sprocket, or other components on power take-off shaft driven equipment.

(6) *Operating instructions*. At the time of initial assignment and at least annually thereafter, the employer shall instruct every employee in the safe operation and servicing of all covered equipment with which he is or will be involved, including at least the following safe operating practices:

(i) Keep all guards in place when the machine is in operation;

(ii) Permit no riders on farm field equipment other than persons required for instruction or assistance in machine operation;

(iii) Stop engine, disconnect the power source, and wait for all machine movement to stop before servicing, adjusting, cleaning, or unclogging the equipment, except where the machine must be running to be properly serviced or maintained, in which case the employer shall instruct employees as to all steps and procedures which are necessary to safely service or maintain the equipment;

(iv) Make sure everyone is clear of machinery before starting the engine, engaging power, or operating the machine;

(v) Lock out electrical power before performing maintenance or service on farmstead equipment.

(7) *Methods of guarding*. Except as otherwise provided in this subpart, each employer shall protect employees from coming into contact with hazards created by moving machinery parts as follows:

(i) Through the installation and use of a guard or shield or guarding by location;

(ii) Whenever a guard or shield or guarding by location is infeasible, by using a guardrail or fence.

(8) *Strength and design of guards*. (i) Where guards are used to provide the protection required by this section, they shall be designed and located to protect against inadvertent contact with the hazard being guarded.

(ii) Unless otherwise specified, each guard and its supports shall be capable of withstanding the force that a 250

pound individual, leaning on or falling against the guard, would exert upon that guard.

(iii) Guards shall be free from burrs, sharp edges, and sharp corners, and shall be securely fastened to the equipment or building.

(9) *Guarding by location.* A component is guarded by location during operation, maintenance, or servicing when, because of its location, no employee can inadvertently come in contact with the hazard during such operation, maintenance, or servicing. Where the employer can show that any exposure to hazards results from employee conduct which constitutes an isolated and unforeseeable event, the component shall also be considered guarded by location.

(10) *Guarding by railings.* Guardrails or fences shall be capable of protecting against employees inadvertently entering the hazardous area.

(11) *Servicing and maintenance.* Whenever a moving machinery part presents a hazard during servicing or maintenance, the engine shall be stopped, the power source disconnected, and all machine movement stopped before servicing or maintenance is performed, except where the employer can establish that:

(i) The equipment must be running to be properly serviced or maintained;

(ii) The equipment cannot be serviced or maintained while a guard or guards otherwise required by this standard are in place; and

(iii) The servicing or maintenance can be safely performed.

(b) *Farm field equipment*—(1) *Power take-off guarding.* (i) All power take-off shafts, including rear, mid- or side-mounted shafts, shall be guarded either by a master shield, as provided in paragraph (b)(1)(ii) of this section, or by other protective guarding.

(ii) All tractors shall be equipped with an agricultural tractor master shield on the rear power take-off except where removal of the tractor master shield is permitted by paragraph (b)(1)(iii) of this section. The master shield shall have sufficient strength to prevent permanent deformation of the shield when a 250 pound operator mounts or dismounts the tractor using the shield as a step.

(iii) Power take-off driven equipment shall be guarded to protect against employee contact with positively driven rotating members of the power drive system. Where power take-off driven equipment is of a design requiring removal of the tractor master shield, the equipment shall also include protection from that portion of the tractor power take-off shaft which protrudes from the tractor.

(iv) Signs shall be placed at prominent locations on tractors and power take-off driven equipment specifying that power drive system safety shields must be kept in place.

(2) *Other power transmission components.* (i) The mesh or nip-points of all power driven gears, belts, chains, sheaves, pulleys, sprockets, and idlers shall be guarded.

(ii) All revolving shafts, including projections such as bolts, keys, or set screws, shall be guarded, except smooth shaft ends protruding less than one-half the outside diameter of the shaft and its locking means.

(iii) Ground driven components shall be guarded in accordance with paragraphs (b)(2)(i) and (b)(2)(ii) of this section if any employee may be exposed to them while the drives are in motion.

(3) *Functional components.* Functional components, such as snapping or husking rolls, straw spreaders and choppers, cutterbars, flail rotors, rotary beaters, mixing augers, feed rolls, conveying augers, rotary tillers, and similar units, which must be exposed for proper function, shall be guarded to the fullest extent which will not substantially interfere with normal functioning of the component.

(4) *Access to moving parts.* (i) Guards, shields, and access doors shall be in place when the equipment is in operation.

(ii) Where removal of a guard or access door will expose an employee to any component which continues to rotate after the power is disengaged, the employer shall provide, in the immediate area, the following:

(A) A readily visible or audible warning of rotation; and

(B) A safety sign warning the employee to:

(*1*) Look and listen for evidence of rotation; and

(*2*) Not remove the guard or access door until all components have stopped.

(c) *Farmstead equipment*—(1) *Power take-off guarding*. (i) All power take-off shafts, including rear, mid-, or side-mounted shafts, shall be guarded either by a master shield as provided in paragraph (b)(1)(ii) of this section or other protective guarding.

(ii) Power take-off driven equipment shall be guarded to protect against employee contact with positively driven rotating members of the power drive system. Where power take-off driven equipment is of a design requiring removal of the tractor master shield, the equipment shall also include protection from that portion of the tractor power take-off shaft which protrudes from the tractor.

(iii) Signs shall be placed at prominent locations on power take-off driven equipment specifying that power drive system safety shields must be kept in place.

(2) *Other power transmission components*. (i) The mesh or nip-points of all power driven gears, belts, chains, sheaves, pulleys, sprockets, and idlers shall be guarded.

(ii) All revolving shafts, including projections such as bolts, keys, or set screws, shall be guarded, with the exception of:

(A) Smooth shafts and shaft ends (without any projecting bolts, keys, or set screws), revolving at less than 10 rpm, on feed handling equipment used on the top surface of materials in bulk storage facilities; and

(B) Smooth shaft ends protruding less than one-half the outside diameter of the shaft and its locking means.

(3) *Functional components*. (i) Functional components, such as choppers, rotary beaters, mixing augers, feed rolls, conveying augers, grain spreaders, stirring augers, sweep augers, and feed augers, which must be exposed for proper function, shall be guarded to the fullest extent which will not substantially interfere with the normal functioning of the component.

(ii) Sweep arm material gathering mechanisms used on the top surface of materials within silo structures shall be guarded. The lower or leading edge of the guard shall be located no more than 12 inches above the material surface and no less than 6 inches in front of the leading edge of the rotating member of the gathering mechanism. The guard shall be parallel to, and extend the fullest practical length of, the material gathering mechanism.

(iii) Exposed auger flighting on portable grain augers shall be guarded with either grating type guards or solid baffle style covers as follows:

(A) The largest dimensions or openings in grating type guards through which materials are required to flow shall be 4¾ inches. The area of each opening shall be no larger than 10 square inches. The opening shall be located no closer to the rotating flighting than 2½ inches.

(B) Slotted openings in solid baffle style covers shall be no wider than 1½ inches, or closer than 3½ inches to the exposed flighting.

(4) *Access to moving parts*. (i) Guards, shields, and access doors shall be in place when the equipment is in operation.

(ii) Where removal of a guard or access door will expose an employee to any component which continues to rotate after the power is disengaged, the employer shall provide, in the immediate area, the following:

(A) A readily visible or audible warning of rotation; and

(B) A safety sign warning the employee to:

(*1*) Look and listen for evidence of rotation; and

(*2*) Not remove the guard or access door until all components have stopped.

(5) *Electrical disconnect means*. (i) Application of electrical power from a location not under the immediate and exclusive control of the employee or employees maintaining or servicing equipment shall be prevented by:

(A) Providing an exclusive, positive locking means on the main switch which can be operated only by the employee or employees performing the maintenance or servicing; or

(B) In the case of material handling equipment located in a bulk storage structure, by physically locating on the equipment an electrical or mechanical means to disconnect the power.

(ii) All circuit protection devices, including those which are an integral part of a motor, shall be of the manual reset type, except where:

(A) The employer can establish that because of the nature of the operation, distances involved, and the amount of time normally spent by employees in the area of the affected equipment, use of the manual reset device would be infeasible;

(B) There is an electrical disconnect switch available to the employee within 15 feet of the equipment upon which maintenance or service is being performed; and

(C) A sign is prominently posted near each hazardous component which warns the employee that, unless the electrical disconnect switch is utilized, the motor could automatically reset while the employee is working on the hazardous component.

(d) *Cotton ginning equipment*—(1) *Power transmission components.* (i) The main drive and miscellaneous drives of gin stands shall be completely enclosed, guarded by location, or guarded by railings (consistent with the requirements of paragraph (a)(7) of this section). Drives between gin stands shall be guarded so as to prevent access to the area between machines.

(ii) When guarded by railings, any hazardous component within 15 horizontal inches of the rail shall be completely enclosed. Railing height shall be approximately 42 inches off the floor, platform, or other working surface, with a midrail between the toprail and the working surface. Panels made of materials conforming to the requirements in Table D–1, or equivalent, may be substituted for midrails. Guardrails shall be strong enough to withstand at least 200 pounds force on the toprail.

(iii) Belts guarded by railings shall be inspected for defects at least daily. The machinery shall not be operated until all defective belts are replaced.

TABLE D–1—EXAMPLES OF MINIMUM REQUIREMENTS FOR GUARD PANEL MATERIALS

Material	Clearance from moving part at all points (in inches)	Largest mesh or opening allowable (in inches)	Minimum gage (U.S. standard) or thickness
Woven wire	Under 2	3/8	16
	2 to 4	1/2	16
	4 to 15	2	12
Expanded metal	Under 4	1/2	18
	4 to 15	2	13
Perforated metal.	Under 4	1/2	20
	4 to 15	2	14
Sheet metal	Under 4		22
	4 to 15		22
Plastic	Under 4		(1)
	4 to 15		(1)

[1] Tensile strength of 10,000 lb/in^2

(iv) Pulleys of V-belt drives shall be completely enclosed or guarded by location whether or not railings are present. The open end of the pulley guard shall be not less than 4 inches from the periphery of the pulleys.

(v) Chains and sprockets shall be completely enclosed, except that they may be guarded by location if the bearings are packed or if accessible extension lubrication fittings are used.

(vi) Where complete enclosure of a component is likely to cause a fire hazard due to excessive deposits of lint, only the face section of nip-point and pulley guards is required. The guard shall extend at least 6 inches beyond the rim of the pulley on the in-running and off-running sides of the belt, and at least 2 inches from the rim and face of the pulley in all other directions.

(vii) Projecting shaft ends not guarded by location shall present a smooth edge and end, shall be guarded by nonrotating caps or safety sleeves, and may not protrude more than one-half the outside diameter of the shaft.

(viii) In power plants and power development rooms where access is limited to authorized personnel, guard railings may be used in place of guards or guarding by location. Authorized employees having access to power plants and power development rooms shall be instructed in the safe operation and maintenance of the equipment in accordance with paragraph (a)(6) of this section.

(2) *Functional components.* (i) Gin stands shall be provided with a permanently installed guard designed to preclude contact with the gin saws while

in motion. The saw blades in the roll box shall be considered guarded by location if they do not extend through the ginning ribs into the roll box when the breast is in the out position.

(ii) Moving saws on lint cleaners which have doors giving access to the saws shall be guarded by fixed barrier guards or their equivalent which prevent direct finger or hand contact with the saws while the saws are in motion.

(iii) An interlock shall be installed on all balers so that the upper gates cannot be opened while the tramper is operating.

(iv) Top panels of burr extractors shall be hinged and equipped with a sturdy positive latch.

(v) All accessible screw conveyors shall be guarded by substantial covers or gratings, or with an inverted horizontally slotted guard of the trough type, which will prevent employees from coming into contact with the screw conveyor. Such guards may consist of horizontal bars spaced so as to allow material to be fed into the conveyor, and supported by arches which are not more than 8 feet apart. Screw conveyors under gin stands shall be considered guarded by location.

(3) *Warning device.* A warning device shall be installed in all gins to provide an audible signal which will indicate to employees that any or all of the machines comprising the gin are about to be started. The signal shall be of sufficient volume to be heard by employees, and shall be sounded each time before starting the gin.

[41 FR 10195, Mar. 9, 1976; 41 FR 11022, Mar. 16, 1976; 41 FR 22268, June 2, 1976, as amended at 41 FR 46598, Oct. 22, 1976]

Subparts E–H [Reserved]

Subpart I—General Environmental Controls

§ 1928.110 Field sanitation.

(a) *Scope.* This section shall apply to any agricultural establishment where eleven (11) or more employees are engaged on any given day in hand-labor operations in the field.

(b) *Definitions. Agricultural employer* means any person, corporation, association, or other legal entity that:

(i) Owns or operates an agricultural establishment;

(ii) Contracts with the owner or operator of an agricultural establishment in advance of production for the purchase of a crop and exercises substantial control over production; or

(iii) Recruits and supervises employees or is responsible for the management and condition of an agricultural establishment.

Agricultural establishment is a business operation that uses paid employees in the production of food, fiber, or other materials such as seed, seedlings, plants, or parts of plants.

Hand-labor operations means agricultural activities or agricultural operations performed by hand or with hand tools. Except for purposes of paragraph (c)(2)(iii) of this section, *hand-labor operations* also include other activities or operations performed in conjunction with hand labor in the field. Some examples of *hand-labor operations* are the hand-cultivation, hand-weeding, hand-planting and hand-harvesting of vegetables, nuts, fruits, seedlings or other crops, including mushrooms, and the hand packing of produce into containers, whether done on the ground, on a moving machine or in a temporary packing shed located in the field. *Hand-labor* does not include such activities as logging operations, the care or feeding of livestock, or hand-labor operations in permanent structures (e.g., canning facilities or packing houses).

Handwashing facility means a facility providing either a basin, container, or outlet with an adequate supply of potable water, soap and single-use towels.

Potable water means water that meets the standards for drinking purposes of the State or local authority having jurisdiction, or water that meets the quality standards prescribed by the U.S. Environmental Protection Agency's National Primary Drinking Water Regulations (40 CFR part 141).

Toilet facility means a fixed or portable facility designed for the purpose of adequate collection and containment of the products of both defecation and urination which is supplied with toilet

paper adequate to employee needs. Toilet facility includes biological, chemical, flush and combustion toilets and sanitary privies.

(c) *Requirements.* Agricultural employers shall provide the following for employees engaged in hand-labor operations in the field, without cost to the employee:

(1) *Potable drinking water.* (i) Potable water shall be provided and placed in locations readily accessible to all employees.

(ii) The water shall be suitably cool and in sufficient amounts, taking into account the air temperature, humidity and the nature of the work performed, to meet the needs of all employees.

(iii) The water shall be dispensed in single-use drinking cups or by fountains. The use of common drinking cups or dippers is prohibited.

(2) *Toilet and handwashing facilities.* (i) One toilet facility and one handwashing facility shall be provided for each twenty (20) employees or fraction thereof, except as stated in paragraph (c)(2)(v) of this section.

(ii) Toilet facilities shall be adequately ventilated, appropriately screened, have self-closing doors that can be closed and latched from the inside and shall be constructed to insure privacy.

(iii) Toilet and handwashing facilities shall be accessibly located and in close proximity to each other. The facilities shall be located within a one-quarter-mile walk of each hand laborer's place of work in the field.

(iv) Where due to terrain it is not feasible to locate facilities as required above, the facilities shall be located at the point of closest vehicular access.

(v) Toilet and handwashing facilities are not required for employees who perform field work for a period of three (3) hours or less (including transportation time to and from the field) during the day.

(3) *Maintenance.* Potable drinking water and toilet and handwashing facilities shall be maintained in accordance with appropriate public health sanitation practices, including the following:

(i) Drinking water containers shall be constructed of materials that maintain water quality, shall be refilled daily or more often as necessary, shall be kept covered and shall be regularly cleaned.

(ii) Toilet facilities shall be operational and maintained in clean and sanitary condition.

(iii) Handwashing facilities shall be refilled with potable water as necessary to ensure an adequate supply and shall be maintained in a clean and sanitary condition; and

(iv) Disposal of wastes from facilities shall not cause unsanitary conditions.

(4) *Reasonable use.* The employer shall notify each employee of the location of the sanitation facilities and water and shall allow each employee reasonable opportunities during the workday to use them. The employer also shall inform each employee of the importance of each of the following good hygiene practices to minimize exposure to the hazards in the field of heat, communicable diseases, retention of urine and agrichemical residues:

(i) Use the water and facilities provided for drinking, handwashing and elimination;

(ii) Drink water frequently and especially on hot days;

(iii) Urinate as frequently as necessary;

(iv) Wash hands both before and after using the toilet; and

(v) Wash hands before eating and smoking.

(d) *Dates*—(1) *Effective date.* This standard shall take effect on May 30, 1987.

(2) *Startup dates.* Employers must comply with the requirements of paragraphs:

(i) Paragraph (c)(1), to provide potable drinking water, by May 30, 1987;

(ii) Paragraph (c)(2), to provide handwashing and toilet facilities, by July 30, 1987;

(iii) Paragraph (c)(3), to provide maintenance for toilet and handwashing facilities, by July 30, 1987; and

(iv) Paragraph (c)(4), to assure reasonable use, by July 30, 1987.

[52 FR 16095, May 1, 1987, as amended at 76 FR 33612, June 8, 2011]

Subparts J–L [Reserved]

Subpart M—Occupational Health

§ 1928.1027 Cadmium.

See § 1910.1027, *Cadmium.*

[61 FR 9255, Mar. 7, 1996]

PART 1949—OFFICE OF TRAINING AND EDUCATION, OCCUPATIONAL SAFETY AND HEALTH ADMINISTRATION

Subpart A—OSHA Training Institute

Sec.
1949.1 Policy regarding tuition fees.
1949.2 Definitions.
1949.3 Schedule of fees.
1949.4 Procedure for payment.
1949.5 Refunds.

AUTHORITY: Secs. 8, 26, Occupational Safety and Health Act of 1970 (29 U.S.C. 657, 670); 31 U.S.C. 9701; Secretary of Labor's Order No. 9–83 (48 FR 35736).

SOURCE: 49 FR 32066, Aug. 10, 1984, unless otherwise noted.

Subpart A—OSHA Training Institute

§ 1949.1 Policy regarding tuition fees.

(a) The OSHA Training Institute shall charge tuition fees for all private sector students attending Institute courses.

(b) The following private sector students shall be exempt from the payment of tuition fees.

(1) Associate members of Field Federal Safety and Health Councils.

(2) Students who are representatives of foreign governments.

(3) Students attending courses which are required by OSHA for the student to maintain an existing designation of OSHA certified outreach trainer.

(c) Additional exemptions may be made by the Director of the OSHA Training Institute on a case by case basis if it is determined that the students exempted are employed by a nonprofit organization and the granting of an exemption from tuition would be in the best interest of the occupational safety and health program. Individuals or organizations wishing to be considered for this exemption shall make application to the Director of the OSHA Training Institute in writing stating the reasons for an exemption from payment of tuition.

[56 FR 28076, June 19, 1991]

§ 1949.2 Definitions.

Any term not defined herein shall have the same meaning as given it in the Act. As used in this subpart:

Private sector students means those students attending the Institute who are not employees of Federal, State, or local governments.

§ 1949.3 Schedule of fees.

(a) Tuition fees will be computed on the basis of the cost to the Government for the Institute conduct of the course, as determined by the Director of the Institute.

(b) Total tuition charges for each course will be set forth in the course announcement.

§ 1949.4 Procedure for payment.

(a) Applications for Institute courses shall be submitted to the Institute Registrar's office in accordance with instructions issued by the Institute.

(b) Private sector personnel shall, upon notification of their acceptance by the Institute, submit a check payable to ''U.S. Department of Labor'' in the amount indicated by the course announcement prior to the commencement of the course.

§ 1949.5 Refunds.

An applicant may withdraw an application and receive full reimbursement of the fee provided that written notification to the Institute Registrar is mailed no later than 14 days before the commencement of the course for which registration has been submitted.

PART 1952—APPROVED STATE PLANS FOR ENFORCEMENT OF STATE STANDARDS

Subpart A—General Provisions and Conditions

Sec.
1952.1 Purpose and scope.
1952.2 Definitions.
1952.3 Developmental plans.
1952.4 Injury and illness recording and reporting requirements.
1952.5 Availability of the plans.

1952.6 Partial approval of State plans.
1952.7 Product standards.
1952.8 Variations, tolerances, and exemptions affecting the national defense.
1952.9 Variances affecting multi-state employers.
1952.10 Requirements for approval of State posters.
1952.11 State and local government employee programs.

Subpart B [Reserved]

Subpart C—South Carolina

1952.90 Description of the plan as initially approved.
1952.91 Developmental schedule.
1952.92 Completion of developmental steps and certification.
1952.93 Compliance staffing benchmarks.
1952.94 Final approval determination.
1952.95 Level of Federal enforcement.
1952.96 Where the plan may be inspected.
1952.97 Changes to approved plan.

Subpart D—Oregon

1952.100 Description of the plan as initially approved.
1952.101 Developmental schedule.
1952.102 Completion of developmental steps and certification.
1952.103 Compliance staffing benchmarks.
1952.104 Final approval determination.
1952.105 Level of Federal enforcement.
1952.106 Where the plan may be inspected.
1952.107 Changes to approved plans.

Subpart E—Utah

1952.110 Description of the plan as initially approved.
1952.111 Developmental schedule.
1952.112 Completion of developmental steps and certification.
1952.113 Compliance staffing benchmarks.
1952.114 Final approval determination.
1952.115 Level of Federal enforcement.
1952.116 Where the plan may be inspected.
1952.117 Changes to approved plans.

Subpart F—Washington

1952.120 Description of the plan.
1952.121 Where the plan may be inspected.
1952.122 Level of Federal enforcement.
1952.123 Developmental schedule.
1952.124 Completion of developmental steps and certification.
1952.125 Changes to approved plans.

Subparts G–H [Reserved]

Subpart I—North Carolina

1952.150 Description of the plan as initially approved.
1952.151 Developmental schedule.
1952.152 Completion of developmental steps and certification.
1952.153 Compliance staffing benchmarks.
1952.154 Final approval determination.
1952.155 Level of Federal enforcement.
1952.156 Where the plan may be inspected.
1952.157 Changes to approved plan.

Subpart J—Iowa

1952.160 Description of the plan as initially approved.
1952.161 Developmental schedule.
1952.162 Completion of developmental steps and certification.
1952.163 Compliance staffing benchmarks.
1952.164 Final approval determination.
1952.165 Level of Federal enforcement.
1952.166 Where the plan may be inspected.
1952.167 Changes to approved plans.

Subpart K—California

1952.170 Description of the plan.
1952.171 Where the plan may be inspected.
1952.172 Level of Federal enforcement.
1952.173 Developmental schedule.
1952.174 Completion of developmental steps and certification.
1952.175 Changes to approved plans.

Subparts L–M [Reserved]

Subpart N—Minnesota

1952.200 Description of the plan as initially approved.
1952.201 Developmental schedule.
1952.202 Completion of developmental steps and certification.
1952.203 Compliance staffing benchmarks.
1952.204 Final approval determination.
1952.205 Level of Federal enforcement.
1952.206 Where the plan may be inspected.
1952.207 Changes to approved plans.

Subpart O—Maryland

1952.210 Description of the plan as initially approved.
1952.211 Developmental schedule.
1952.212 Completion of developmental steps and certification.
1952.213 Compliance staffing benchmarks.
1952.214 Final approval determination.
1952.215 Level of Federal enforcement.
1952.216 Where the plan may be inspected.
1952.217 Changes to approved plans.

Subpart P—Tennessee

1952.220 Description of the plan as initially approved.
1952.221 Developmental schedule.
1952.222 Completed developmental steps.
1952.223 Compliance staffing benchmarks.
1952.224 Final approval determination.

1952.225 Level of Federal enforcement.
1952.226 Where the plan may be inspected.
1952.227 Changes to approved plans.

Subpart Q—Kentucky

1952.230 Description of the plan as initially approved.
1952.231 Developmental schedule.
1952.232 Completion of developmental steps and certification.
1952.233 Compliance staffing benchmarks.
1952.234 Final approval determination.
1952.235 Level of Federal enforcement.
1952.236 Where the plan may be inspected.
1952.237 Changes to approved plans.

Subpart R—Alaska

1952.240 Description of the plan as initially approved.
1952.241 Developmental schedule.
1952.242 Completed developmental steps.
1952.243 Final approval determination.
1952.244 Level of Federal enforcement.
1952.245 Where the plan may be inspected.
1952.246 Changes to approved plans.

Subpart S [Reserved]

Subpart T—Michigan

1952.260 Description of the plan as initially approved.
1952.261 Developmental schedule.
1952.262 Completion of developmental steps and certification.
1952.263 Compliance staffing benchmarks.
1952.264 [Reserved]
1952.265 Level of Federal enforcement.
1952.266 Where the plan may be inspected.
1952.267 Changes to approved plans.

Subpart U—Vermont

1952.270 Description of the plan.
1952.271 Where the plan may be inspected.
1952.272 Level of Federal enforcement.
1952.273 Developmental schedule.
1952.274 Completion of developmental steps and certification.
1952.275 Changes to approved plans.

Subpart V [Reserved]

Subpart W—Nevada

1952.290 Description of the plan as initially approved.
1952.291 Developmental schedule.
1952.292 Completion of developmental steps and certification.
1952.293 Compliance staffing benchmarks.
1952.294 Final approval determination.
1952.295 Level of Federal enforcement.
1952.296 Where the plan may be inspected.
1952.297 Changes to approved plans.

Subpart X [Reserved]

Subpart Y—Hawaii

1952.310 Description of the plan as initially approved.
1952.311 Developmental schedule.
1952.312 Completion of developmental steps and certification.
1952.313 [Reserved]
1952.314 Level of Federal enforcement.
1952.315 Where the plan may be inspected.
1952.316 Changes to approved plans.

Subpart Z—Indiana

1952.320 Description of the plan as initially approved.
1952.321 Developmental schedule.
1952.322 Completion of developmental steps and certification.
1952.323 Compliance staffing benchmarks.
1952.324 Final approval determination.
1952.325 Level of Federal enforcement.
1952.326 Where the plan may be inspected.
1952.327 Changes to approved plans.

Subpart AA [Reserved]

Subpart BB—Wyoming

1952.340 Description of the plan as initially approved.
1952.341 Developmental schedule.
1952.342 Completion of developmental steps and certification.
1952.343 Compliance staffing benchmarks.
1952.344 Final approval determination.
1952.345 Level of Federal enforcement.
1952.346 Where the plan may be inspected.
1952.347 Changes to approved plans.

Subpart CC—Arizona

1952.350 Description of the plan as initially approved.
1952.351 Developmental schedule.
1952.352 Completion of developmental steps and certification.
1952.353 Compliance staffing benchmarks.
1952.354 Final approval determination.
1952.355 Level of Federal enforcement.
1952.356 Where the plan may be inspected.
1952.357 Changes to approved plans.

Subpart DD—New Mexico

1952.360 Description of the plan as initially approved.
1952.361 Developmental schedule.
1952.362 Completion of developmental steps and certification.
1952.363 Compliance staffing benchmarks.
1952.364 [Reserved]
1952.365 Level of Federal enforcement.
1952.366 Where the plan may be inspected.
1952.367 Changes to approved plans.

Subpart EE—Virginia

1952.370 Description of the plan as initially approved.
1952.371 Developmental schedule.
1952.372 Completion of developmental steps and certification.
1952.373 Compliance staffing benchmarks.
1952.374 Final approval determination.
1952.375 Level of Federal enforcement.
1952.376 Where the plan may be inspected.
1952.377 Changes to approved plans.

Subpart FF—Puerto Rico

1952.380 Description of the plan.
1952.381 Where the plan may be inspected.
1952.382 Level of Federal enforcement.
1952.383 Completion of developmental steps and certification.
1952.384 Completed developmental steps.
1952.385 Changes to approved plans.

AUTHORITY: Sec. 18, 84 Stat. 1608 (29 U.S.C. 667); 29 CFR part 1902; Secretary of Labor's Order No. 1–2012 (77 FR 3912).

Subpart A—General Provisions and Conditions

SOURCE: 37 FR 25931, Dec. 6, 1972, unless otherwise noted.

§ 1952.1 Purpose and scope.

(a) This part sets forth the Assistant Secretary's approval of State plans submitted under section 18 of the Act and part 1902 of this chapter. Each approval of a State plan is based on a determination by the Assistant Secretary that the plan meets the requirements of section 18(c) of the Act and the criteria and indices of effectiveness specified in part 1902.

(b) This subpart contains general provisions and conditions which are applicable to all State plans, regardless of the time of their approval. Separate subparts are used for the identification of specific State plans, indication of locations where the full plan may be inspected and copied, and setting forth any special conditions and special policies which may be applicable to a particular plan.

§ 1952.2 Definitions.

(a) *Act* means the Occupational Safety and Health Act of 1970 (29 U.S.C. 651 *et seq.*).

(b) *Assistant Secretary* means the Assistant Secretary of Labor for Occupational Safety and Health.

§ 1952.3 Developmental plans.

Any developmental plan; that is, a plan not fully meeting the criteria set forth in § 1902.3 of this chapter at the time of approval, must meet the requirements of § 1902.2(b) of this chapter.

§ 1952.4 Injury and illness recording and reporting requirements.

(a) Injury and illness recording and reporting requirements promulgated by State-Plan States must be substantially identical to those in 29 CFR part 1904 ''Recording and Reporting Occupational Injuries and Illnesses.'' State-Plan States must promulgate recording and reporting requirements that are the same as the Federal requirements for determining which injuries and illnesses will be entered into the records and how they are entered. All other injury and illness recording and reporting requirements that are promulgated by State-Plan States may be more stringent than, or supplemental to, the Federal requirements, but, because of the unique nature of the national recordkeeping program, States must consult with OSHA and obtain approval of such additional or more stringent reporting and recording requirements to ensure that they will not interfere with uniform reporting objectives. State-Plan States must extend the scope of their regulation to State and local government employers.

(b) A State may not grant a variance to the injury and illness recording and reporting requirements for private sector employers. Such variances may only be granted by Federal OSHA to assure nationally consistent workplace injury and illness statistics. A State may only grant a variance to the injury and illness recording and reporting requirements for State or local government entities in that State after obtaining approval from Federal OSHA.

(c) A State must recognize any variance issued by Federal OSHA.

(d) A State may, but is not required, to participate in the Annual OSHA Injury/Illness Survey as authorized by 29 CFR 1904.41. A participating State may

either adopt requirements identical to 1904.41 in its recording and reporting regulation as an enforceable State requirement, or may defer to the Federal regulation for enforcement. Nothing in any State plan shall affect the duties of employers to comply with 1904.41, when surveyed, as provided by section 18(c)(7) of the Act.

[66 FR 6135, Jan. 19, 2001]

§ 1952.5 Availability of the plans.

(a) A complete copy of each State plan including any supplements thereto, shall be kept at:

(1) Office of Federal and State Operations, OSHA, Room 305, Railway Labor Building, 400 First Street, NW., U.S. Department of Labor, Washington, DC 20210; and

(2) The office of the nearest Regional Administrator, Occupational Safety and Health Administration. The addresses of the Regional Administrators are listed in the ''United States Government Organization Manual,'' 1972/73, p. 310. The copy shall be available for public inspection and copying.

(b) A complete copy of the State plan of a particular State, including any supplements thereto, shall be kept at the office of the State office listed in the appropriate subpart of this part 1952.

§ 1952.6 Partial approval of State plans.

(a) The Assistant Secretary may partially approve a plan under part 1902 of this chapter whenever:

(1) The portion to be approved meets the requirements of part 1902;

(2) The plan covers more than one occupational safety and health issue; and

(3) Portions of the plan to be approved are reasonably separable from the remainder of the plan.

(b) Whenever the Assistant Secretary approves only a portion of a State plan, he may give notice to the State of an opportunity to show cause why a proceeding should not be commenced for disapproval of the remainder of the plan under subpart C of part 1902 before commencing such a proceeding.

§ 1952.7 Product standards.

(a) Under section 18(c)(2) of the Act, a State plan must not include standards for products which are distributed or used in interstate commerce which are different from Federal standards for such products unless such standards are required by compelling local conditions and do not unduly burden interstate commerce. In § 1902.3(c)(2) of this chapter this is interpreted as not being applicable to customized products, or parts not normally available on the open market, or to the optional parts, or additions to products which are ordinarily available with such optional parts, or additions.

(b) In situations where section 18(c)(2) is considered applicable, and provision is made for the adoption of product standards, the requirements of section 18(c)(2), as they relate to undue burden on interstate commerce, shall be treated as a condition subsequent in light of the facts and circumstances which may be involved.

§ 1952.8 Variations, tolerances, and exemptions affecting the national defense.

(a) The power of the Secretary of Labor under section 16 of the Act to provide reasonable limitations and variations, tolerances, and exemptions to and from any or all provisions of the Act as he may find necessary and proper to avoid serious impairment of the national defense is reserved.

(b) No action by a State under a plan shall be inconsistent with action by the Secretary under this section of the Act.

§ 1952.9 Variances affecting multi-state employers.

(a) Where a State standard is identical to a Federal standard addressed to the same hazard, an employer or group of employers seeking a temporary or permanent variance from such standard, or portion thereof, to be applicable to employment or places of employment in more than one State, including at least one State with an approved plan, may elect to apply to the Assistant Secretary for such variance under the provisions of 29 CFR part 1905, as amended.

(b) Actions taken by the Assistant Secretary with respect to such application for a variance, such as interim orders, with respect thereto, the granting, denying, or issuing any modification or extension thereof, will be deemed prospectively an authoritative interpretation of the employer or employers' compliance obligations with regard to the State standard, or portion thereof, identical to the Federal standard, or portion thereof, affected by the action in the employment or places of employment covered by the application.

(c) Nothing herein shall affect the option of an employer or employers seeking a temporary or permanent variance with applicability to employment or places of employment in more than one State to apply for such variance either to the Assistant Secretary or the individual State agencies involved. However, the filing with, as well as granting, denial, modification, or revocation of a variance request or interim order by, either authority (Federal or State) shall preclude any further substantive consideration of such application on the same material facts for the same employment or place of employment by the other authority.

(d) Nothing herein shall affect either Federal or State authority and obligations to cite for noncompliance with standards in employment or places of employment where no interim order, variance, or modification or extension thereof, granted under State or Federal law applies, or to cite for noncompliance with such Federal or State variance action.

[40 FR 25450, June 16, 1975]

§ 1952.10 Requirements for approval of State posters.

(a)(1) In order to inform employees of their protections and obligations under applicable State law, of the issues not covered by State law, and of the continuing availability of Federal monitoring under section 18(f) of the Act, States with approved plans shall develop and require employers to post a State poster meeting the requirements set out in paragraph (a)(5) of this section.

(2) Such poster shall be substituted for the Federal poster under section 8(c)(1) of the Act and § 1903.2 of this chapter where the State attains operational status for the enforcement of State standards as defined in § 1954.3(b) of this chapter.

(3) Where a State has distributed its poster and has enabling legislation as defined in § 1954.3(b)(1) of this chapter but becomes nonoperational under the provisions of § 1954.3(f)(1) of this chapter because of failure to be at least as effective as the Federal program, the approved State poster may, at the discretion of the Assistant Secretary, continue to be substituted for the Federal poster in accordance with paragraph (a)(2) of this section.

(4) A State may, for good cause shown, request, under 29 CFR part 1953, approval of an alternative to a State poster for informing employees of their protections and obligations under the State plans, provided such alternative is consistent with the Act, 29 CFR 1902.4(c)(2)(iv) and applicable State law. In order to qualify as a substitute for the Federal poster under this paragraph, such alternative must be shown to be at least as effective as the Federal poster requirements in informing employees of their protections and obligations and address the items listed in paragraph (a)(5) of this section.

(5) In developing the poster, the State shall address but not be limited to the following items:

(i) Responsibilities of the State, employers and employees;

(ii) The right of employees or their representatives to request workplace inspections;

(iii) The right of employees making such requests to remain anonymous;

(iv) The right of employees to participate in inspections;

(v) Provisions for prompt notice to employers and employees when alleged violations occur;

(vi) Protection for employees against discharge or discrimination for the exercise of their rights under Federal and State law;

(vii) Sanctions;

(viii) A means of obtaining further information on State law and standards and the address of the State agency;

(ix) The right to file complaints with the Occupational Safety and Health

Administration about State program administration;

(x) A list of the issues as defined in § 1902.2(c) of this chapter which will not be covered by State plan;

(xi) The address of the Regional Office of the Occupational Safety and Health Administration; and

(xii) Such additional employee protection provisions and obligations under State law as may have been included in the approved State plan.

(b) Posting of the State poster shall be recognized as compliance with the posting requirements in section 8(c)(1) of the Act and § 1903.2 of this chapter, provided that the poster has been approved in accordance with subpart B of part 1953. Continued Federal recognition of the State poster is also subject to pertinent findings of effectiveness with regard to the State program under 29 CFR part 1954.

[39 FR 39036, Nov. 5, 1974]

§ 1952.11 State and local government employee programs.

(a) Each approved State plan must contain satisfactory assurances that the State will, to the extent permitted by its law, establish and maintain an effective and comprehensive occupational safety and health program applicable to all employees of public agencies of the State and its political subdivisions which program is as effective as the standards contained in an approved plan.

(b) This criteria for approved State plans is interpreted to require the following elements with regard to coverage, standards, and enforcement:

(1) *Coverage*. The program must cover all public employees over which the State has legislative authority under its constitution. ''To the extent permitted by its law,'' specifically recognizes the situation where local governments exclusively control their own employees, such as under certain ''home rule'' charters.

(2) *Standards*. The program must be as effective as the standards contained in the approved plan applicable to private employers. Thus, the same criteria and indices of standards effectiveness contained in §§ 1902.3(c) and 1902.4 (a) and (b) of this chapter would apply to the public employee program. Where hazards are unique to public employment, all appropriate indices of effectiveness, such as those dealing with temporary emergency standards, development of standards, employee information, variances, and protective equipment, would be applicable to standards for such hazards.

(3) *Enforcement*. Although section 18(c)(6) of the Act requires State public employee programs to be ''as effective as standards'' contained in the State plan, minimum enforcement elements are required to ensure an ''effective and comprehensive'' public employee program as follows: (See notice of approval of the North Carolina Plan, 38 FR 3041).

(i) Regular inspections of workplaces, including inspections in response to valid employee complaints;

(ii) A means for employees to bring possible violations to the attention of inspectors;

(iii) Notification to employees, or their representatives, of decisions that no violations are found as a result of complaints by such employees or their representatives, and informal review of such decisions;

(iv) A means of informing employees of their protections and obligations under the Act;

(v) Protection for employees against discharge of discrimination because of the exercise of rights under the Act;

(vi) Employee access to information on their exposure to toxic materials or harmful physical agents and prompt notification to employees when they have been or are being exposed to such materials or agents at concentrations or levels above those specified by the applicable standards;

(vii) Procedures for the prompt restraint or elimination of imminent danger situations;

(viii) A means of promptly notifying employers and employees when an alleged violation has occurred, including the proposed abatement requirements;

(ix) A means of establishing timetables for the correction of violations;

(x) A program for encouraging voluntary compliance; and

(xi) Such other additional enforcement provisions under State law as may have been included in the State plan.

(c) In accordance with § 1902.3(b)(3), the State agency or agencies designated to administer the plan throughout the State must retain overall responsibility for the entire plan. Political subdivisions may have the responsibility and authority for the development and enforcement of standards: *Provided*, That the designated State agency or agencies have adequate authority by statute, regulation, or agreement to insure that the commitments of the State under the plan will be fulfilled.

These commitments supersede and control any delegation of authority to State or local agencies. (See Notice of Approval of Colorado Plan, 38 FR 25172.)

[40 FR 58451, Dec. 17, 1975]

Subpart B [Reserved]

Subpart C—South Carolina

SOURCE: 51 FR 8820, Mar. 14, 1986, unless otherwise noted.

§ 1952.90 Description of the plan as initially approved.

(a) The plan identifies the South Carolina Department of Labor as the State agency designated to administer the plan. It adopts the definition of occupational safety and health issues expressed in § 1902.2(c)(1) of this chapter. The plan states that the Department of Labor has been promulgating safety and health standards. The South Carolina Commissioner of Labor is promulgating all standards and amendments thereto which have been promulgated by the Secretary of Labor, except those found in §§ 1910.13; 1910.14; 1910.15; and 1910.16 of this chapter (ship repairing, shipbuilding, shipbreaking, and longshoring). The plan describes procedures for the development and promulgation of additional standards, enforcement of such standards, and the prompt restraint or elimination of imminent danger situations. The South Carolina Legislature passed enabling legislation in 1971, a copy of which was submitted with the original plan. Section 40–261 through 40–274 South Carolina Code of Laws, 1962. The amendments to the plan include proposed amendments to this legislation to more fully bring the plan into conformity with the requirements of part 1902. Under the amended legislation, the South Carolina Department of Labor will have full authority to administer and enforce all laws, rules, and orders protecting employee safety and health in all places of employment in the State.

(b) The plan includes a statement of the Governor's support for the legislative amendments and a legal opinion that the amended act will meet the requirements of the Occupational Safety and Health Act of 1970 and is consistent with the constitution and laws of South Carolina. The plan sets out goals and provides a timetable for bringing it into full conformity with part 1902 upon enactment of the proposed legislative amendments.

§ 1952.91 Developmental schedule.

The South Carolina plan is developmental. The following is the schedule of the developmental steps provided by the plan:

(a) Introduction of the above-mentioned legislative amendments in the legislative session following approval of the plan.

(b) Public hearings and adoption of Federal standards to be completed by December 1972.

(c) A management information system to be completed by no later than June 30, 1974.

(d) A voluntary compliance program to be completed by no later than June 30, 1974.

(e) An occupational safety and health program for public employees to be completed by no later than June 30, 1974.

(f) A program for the coverage of agriculture workers to be completed no later than June 30, 1973.

(g) An approved merit system covering employees implementing the plan to be effective 90 days following approval of the plan.

(h) A revised compliance manual to be completed within 6 months following approval of the plan.

§ 1952.92 Completion of developmental steps and certification.

(a) In accordance with § 1952.91(a) legislative amendments were introduced into the 1973 South Carolina General Assembly and were enacted effective June 12, 1973. The amendments have been supplemented by State commitments to:

(1) Take action on all employee discrimination complaints within 90 days, and

(2) Limit the duration of temporary variances to a maximum of two years, inclusive of any renewals.

(b) In accordance with § 1952.91(b) the South Carolina occupational safety and health standards, identical to Federal standards (through December 3, 1974), have been promulgated and were approved by the Assistant Regional Director for Occupational Safety and Health effective April 10, 1975 (40 FR 16257).

(c) In accordance with § 1952.91(d) a voluntary compliance program, to be known as the Taxpayers' Assistant Program, has been developed.

(d) In accordance with § 1952.91(f) coverage of agricultural workers began on July 1, 1973, and was initiated directly by the South Carolina Department of Labor. (The State plan has been amended to delete the proposal to delegate such responsibility to the State Department of Agriculture.)

(e) In accordance with § 1952.91(g) the State plan has been amended to show extensions of merit system coverage to the South Carolina Department of Labor, Division of Occupational Safety and Health. Agreement with the Department of Health and Environmental Control requires that all health personnel cooperating in the State occupational safety and health program be likewise covered by the State merit system.

(f) In accordance with the requirements of § 1952.10 the South Carolina Safety and Health Poster for private and public employees was approved by the Assistant Secretary on February 19, 1976.

(g) In accordance with § 1952.91(c) development of a management information system designed to provide the data required by the Assistant Secretary and information necessary for internal management of resources and evaluation of State program performance has been completed.

(h) The State plan has been amended to include the details of a public employee program. State and local government employees will be afforded protection identical to that of employees in the private sector.

(i) The South Carolina plan has been amended to include an expanded radiation health effort. The Division of Radiological Health, South Carolina Department of Health and Environmental Control, under contract to the South Carolina Department of Labor will make inspections to provide coverage of radiation hazards not subject to regulation under the Atomic Energy Act of 1954.

(j) In accordance with plan commitments, South Carolina regulations for enforcement of standards and review of contested cases, Article IV, were revised and repromulgated on June 5, 1975. Further amendment to section 4.00K (September 26, 1975) and a January 15, 1976, letter of supplemental assurances from Commissioner Edgar L. McGowan are considered integral parts of the approved South Carolina review procedures. On March 11, 1976, the State of South Carolina promulgated the necessary changes to Article IV to fulfill the commitments contained in their January 15, 1976, letter of supplemental assurances.

(k) The State plan has been amended to include an Affirmative Action Plan in which the State outlines its policy of equal employment opportunity.

(l) In accordance with § 1952.91(h) the State has developed and amended a Compliance Manual which defines the procedures and guidelines to be used by the South Carolina compliance and consultation staff in carrying out the goals of the program.

(m) In accordance with § 1902.34 of this chapter, the South Carolina occupational safety and health plan was certified, effective August 3, 1976, as having completed all developmental steps specified in the plan as approved on November 30, 1972, on or before December 31, 1975.

§ 1952.93 Compliance staffing benchmarks.

Under the terms of the 1978 Court Order in *AFL-CIO* v. *Marshall* compliance staffing levels (benchmarks) necessary for a ''fully effective'' enforcement program were required to be established for each State operating an approved State plan. In September 1984 South Carolina, in conjunction with OSHA, completed a reassessment of the levels initially established in 1980 and proposed revised compliance staffing benchmarks of 17 safety and 12 health compliance officers. After opportunity for public comment and service on the AFL-CIO, the Assistant Secretary approved these revised staffing requirements on January 17, 1986.

§ 1952.94 Final approval determination.

(a) In accordance with section 18(e) of the Act and procedures in 29 CFR part 1902, and after determination that the State met the ''fully effective'' compliance staffing benchmarks as revised in 1984 in response to a Court Order in *AFL-CIO* v. *Marshall* (CA 74–406), and was satisfactorily providing reports to OSHA through participation in the Federal-State Integrated Management Information System, the Assistant Secretary evaluated actual operations under the South Carolina State plan for a period of at least one year following certification of completion of developmental steps (41 FR 32424). Based on the 18(e) Evaluation Report for the period of December 1, 1985, through January 31, 1987, and after opportunity for public comment, the Assistant Secretary determined that in operation the State of South Carolina's occupational safety and health program is at least as effective as the Federal program in providing safe and healthful employment and places of employment and meets the criteria for final State plan approval in section 18(e) of the Act and implementing regulations at 29 CFR part 1902. Accordingly, the South Carolina plan was granted final approval and concurrent Federal enforcement authority was relinquished under section 18(e) of the Act effective December 15, 1987.

(b) Except as otherwise noted, the plan which has received final approval covers all activities of employers and all places of employment in South Carolina. The plan does not cover private sector maritime employment; military bases; Federal government employers and employees; the U.S. Postal Service (USPS), including USPS employees, and contract employees and contractor-operated facilities engaged in USPS mail operations; private sector employment at Area D of the Savannah River Site (power generation and transmission facilities operated by South Carolina Electric and Gas) and at the Three Rivers Solid Waste Authority; the enforcement of the field sanitation standard, 29 CFR 1928.110, and the temporary labor camps standard, 29 CFR 1910.142, with respect to any agricultural establishment where employees are engaged in ''agricultural employment'' within the meaning of the Migrant and Seasonal Agricultural Worker Protection Act, 29 U.S.C. 1802(3), regardless of the number of employees, including employees engaged in hand packing of produce into containers, whether done on the ground, on a moving machine, or in a temporary packing shed, except that South Carolina retains enforcement responsibility over agricultural temporary labor camps for employees engaged in egg, poultry, or red meat production, or the post-harvest processing of agricultural or horticultural commodities.

(c) South Carolina is required to maintain a State program which is at least as effective as operations under the Federal program; to submit plan supplements in accordance with 29 CFR part 1953; to allocate sufficient safety and health enforcement staff to meet the benchmarks for State staffing established by the U.S. Department of Labor, or any revisions to those benchmarks; and, to furnish such reports in such form as the Assistant Secretary may from time to time require.

[52 FR 48111, Dec. 18, 1987, as amended at 62 FR 2560, Jan. 17, 1997; 65 FR 36619, June 9, 2000]

§ 1952.95 Level of Federal enforcement.

(a) As a result of the Assistant Secretary's determination granting final approval to the South Carolina plan under section 18(e) of the Act, effective

December 15, 1987, occupational safety and health standards which have been promulgated under section 6 of the Act do not apply with respect to issues covered under the South Carolina plan. This determination also relinquishes concurrent Federal OSHA authority to issue citations for violations of such standards under sections 5(a)(2) and 9 of the Act; to conduct inspections and investigations under section 8 (except those necessary to conduct evaluation of the plan under section 18(f) and other inspections, investigations, or proceedings necessary to carry out Federal responsibilities not specifically preempted by section 18(e)); to conduct enforcement proceedings in contested cases under section 10; to institute proceedings to correct imminent dangers under section 13; and to propose civil penalties or initiate criminal proceedings for violations of the Federal Act under section 17. The Assistant Secretary retains jurisdiction under the above provisions in any proceeding commenced under section 9 or 10 before the effective date of the 18(e) determination.

(b)(1) In accordance with section 18(e), final approval relinquishes Federal OSHA authority only with regard to occupational safety and health issues covered by the South Carolina plan. OSHA retains full authority over issues which are not subject to State enforcement under the plan. Thus, Federal OSHA retains its authority relative to safety and health in private sector maritime activities, and will continue to enforce all provisions of the Act, rules or orders, and all Federal standards, current or future, specifically directed to maritime employment (29 CFR Part 1915, shipyard employment; Part 1917, marine terminals; Part 1918, longshoring; Part 1919, gear certification), as well as provisions of general industry and construction standards (29 CFR Parts 1910 and 1926) appropriate to hazards found in these employments; employment on military bases; and private sector employment at Area D of the Savannah River Site (power generation and transmission facilities operated by South Carolina Electric and Gas) and at the Three Rivers Solid Waste Authority. Federal jurisdiction is retained and exercised by the Employment Standards Administration, U.S. Department of Labor, (Secretary's Order 5–96, dated December 27, 1996) with respect to the field sanitation standard, 29 CFR 1928.110, and the enforcement of the temporary labor camps standard, 29 CFR 1910.142, in agriculture, as described in §1952.94(b). Federal jurisdiction is also retained with respect to Federal government employers and employees; and the U.S. Postal Service (USPS), including USPS employees, and contract employees and contractor-operated facilities engaged in USPS mail operations.

(2) In addition, any hazard, industry, geographical area, operation or facility over which the State is unable to effectively exercise jurisdiction for reasons not related to the required performance or structure of the plan shall be deemed to be an issue not covered by plan which has received final approval, and shall be subject to Federal enforcement. Where enforcement jurisdiction is shared between Federal and State authorities for a particular area, project, or facility, in the interest of administrative practicability Federal jurisdiction may be assumed over the entire project or facility. In either of the two aforementioned circumstances, Federal enforcement may be exercised immediately upon agreement between Federal OSHA and the State designated agency.

(c) Federal authority under provisions of the Act not listed in section 18(e) is unaffected by final approval of the plan. Thus, for example, the Assistant Secretary retains his authority under section 11(c) of the Act with regard to complaints alleging discrimination against employees because of the exercise of any right afforded to the employee by the Act, although such complaints may be referred to the State for investigation. The Assistant Secretary also retains his authority under section 6 of the Act to promulgate, modify or revoke occupational safety and health standards which address the working conditions of all employees, including those in States which have received an affirmative 18(e) determination, although such standards may not be federally applied. In the event that the State's 18(e) status is subsequently withdrawn and

Federal authority reinstated, all Federal standards, including any standards promulgated or modified during the 18(e) period, would be federally enforceable in that State.

(d) As required by section 18(f) of the Act, OSHA will continue to monitor the operations of the South Carolina State program to assure that the provisions of the State plan are substantially complied with and that the program remains at least as effective as the Federal program. Failure by the State to comply with its obligations may result in the revocation of the final determination under section 18(e), resumption of Federal enforcement, and/or proceedings for withdrawal of plan approval.

[52 FR 48111, Dec. 18, 1987, as amended at 62 FR 2560, Jan. 17, 1997; 65 FR 36619, June 9, 2000]

§ 1952.96 Where the plan may be inspected.

A copy of the principal documents comprising the plan may be inspected and copied during normal business hours at the following locations:

Office of State Programs, Occupational Safety and Health Administration, U.S. Department of Labor, 200 Constitution Avenue NW, Room N3700, Washington, DC 20210;

Office of the Regional Administrator, Occupational Safety and Health Administration, U.S. Department of Labor, Atlanta Federal Center, 61 Forsyth Street, SW, Room 6T50, Atlanta, Georgia 30303; and

Office of the Director, South Carolina Department of Labor, Licensing and Regulation, Koger Office Park, Kingstree Building, 110 Centerview Drive, P.O. Box 11329, Columbia, South Carolina 29210.

[65 FR 36619, June 9, 2000]

§ 1952.97 Changes to approved plan.

(a) *Legislation*. (1) On March 29, 1994, the Assistant Secretary approved South Carolina's revised statutory penalty levels which are the same as the revised Federal penalty levels contained in section 17 of the Act as amended on November 5, 1990.

(2) [Reserved]

(b) *The Voluntary Protection Program*. On June 24, 1994, the Assistant Secretary approved South Carolina's plan supplement, which is generally identical to the Federal STAR Voluntary Protection Program. South Carolina's ''Palmetto'' VPP is limited to the STAR Program in general industry, excludes the MERIT AND DEMONSTRATION Programs and excludes the construction industry. Also, injury rates must be at or below 50 percent of the State industry average rather than the National industry average.

(c) *Temporary labor camps/field sanitation*. Effective February 3, 1997, the Assistant Secretary approved South Carolina's plan amendment, dated August 1, 1996, relinquishing coverage for the issues of field sanitation (29 CFR 1928.110) and temporary labor camps (29 CFR 1910.142) in agriculture (except for agricultural temporary labor camps associated with egg, poultry or red meat production, or the post-harvest processing of agricultural or horticultural commodities.) The Employment Standards Administration, U.S. Department of Labor, has assumed responsibility for enforcement of these Federal OSHA standards in agriculture in South Carolina pursuant to Secretary of Labor's Order 5–96, dated December 27, 1996.

[59 FR 39257, Aug. 2, 1994, as amended at 62 FR 2560, Jan. 17, 1997]

Subpart D—Oregon

§ 1952.100 Description of the plan as initially approved.

(a)(1) The plan identifies the Oregon Workmen's Compensation Board as the State agency designated to administer the plan. It adopts the definition of occupational safety and health issues expressed in § 1902.2(c)(1) of this chapter. The plan contains a standards comparison of existing and proposed State standards with Federal standards. All proposed standards except those found in §§ 1910.13, 1910.14, 1910.15, and 1910.16 (ship repairing, shipbuilding, ship breaking and longshoring) will be adopted and enforced after public hearings within 1 year following approval of the plan.

(2) The plan provides a description of personnel employed under a merit system; the coverage of employees of political subdivisions; procedures for the development and promulgation of standards; procedures for prompt and effective standards setting action for the protection of employees against

new and unforeseen hazards; and procedures for the prompt restraint of imminent danger situations.

(b)(1) The plan includes proposed draft legislation to be considered by the Oregon Legislature during its 1973 session amending chapter 654 of Oregon Revised Statutes to bring it into conformity with the requirements of part 1902 of this chapter. Under the proposed legislation, the workmen's compensation board will have full authority to enforce and administer all laws and rules protecting employee health and safety in all places of employment in the State. The legislation further proposes to bring the State into conformity in areas such as variances and protection of employees from hazards.

(2) The legislation is also intended to insure inspections in response to complaints; employer and employee representatives' opportunity to accompany inspectors and to call attention to possible violations before, during and after inspections; notification of employees or their representatives when no compliance action is taken as a result of alleged violations, including informal review; notification of employees of their protections; protection of employees against discharge or discrimination in terms and conditions of employment; adequate safeguards to protect trade secrets; provision for prompt notice to employers and employees of alleged violations of standards and abatement requirements; effective sanctions against employers for violations of standards and orders; employer right of review of alleged violations, abatement periods and proposed penalties to the workmen's compensation board and employee participation in review proceedings. The plan also proposes to develop a program to encourage voluntary compliance by employers and employees.

(c) The plan includes a statement of the Governor's support for the legislative amendments and legal opinion that the draft legislation will meet the requirements of the Occupational Safety and Health Act of 1970 and is consistent with the constitution and laws of Oregon. The plan sets out goals and provides a timetable for bringing it into full conformity with part 1902 upon enactment of the proposed legislation.

(d) The Oregon plan includes the following documents as of the date of approval:

(1) The plan description document with appendices.

(2) Appendix G, the standards comparison.

(3) Letter from M. Keith Wilson, Chairman, Workmen's Compensation Board to the Assistant Secretary, June 30, 1972, on product standards.

(4) Letter from M. Keith Wilson to James Lake, Regional Administrator, June 30, 1972, clarifying employee sanction provisions.

(5) Letter with attachments from M. Keith Wilson to the Assistant Secretary, September 5, 1972, clarifying several issues raised during the review process.

(6) Letter from the commissioners of the workmen's compensation board to the Assistant Secretary, December 4, 1972, clarifying the remaining issues raised during the review process.

(e) Also available for inspection and copying with the plan documents will be the public comments received and a transcript of the public hearing held September 27, 1972.

[37 FR 28630, Dec. 28, 1972. Redesignated at 52 FR 9162, Mar. 23, 1987, as amended at 59 FR 42495, Aug. 18, 1994]

§ 1952.101 Developmental schedule.

The Oregon plan is developmental. The schedule of developmental steps as described in the plan is revised in a letter dated November 27, 1973, from M. Keith Wilson, Chairman, Workman's Compensation Board to James Lake, Assistant Regional Director for OSHA and includes:

(a) Introduction of the legislative amendments in the legislative session following approval of the plan. The legislation was passed and became effective July 1, 1973.

(b) Complete revision of all occupational safety and health codes as proposed within one year after the proposed standards are found to be at least as effective by the Secretary of Labor.

(c) Development of administrative rules and procedures, including rights

and responsibilities of employers, employees and the Workmen's Compensation Board including regulations on variances, exposure to hazards and access to information on exposure to hazards by July 1, 1974.

(d) Training of present inspection personnel of the accident prevention division and the occupational health section by July 1, 1973. Selection and training of additional inspectors within one year of the effective date of the 1973–1975 budget.

(e) Establishment of specific occupational safety and health goals by July 1, 1974. These goals will be reviewed and revised biannually.

(f) Development and implementation of an affirmative action program by July 1, 1973.

(g) Development and implementation of administrative rules relative to an on-site voluntary compliance consultation program by July 1, 1974.

[39 FR 11881, Apr. 1, 1974. Redesignated at 52 FR 9162, Mar. 23, 1987, and further redesignated at 59 FR 42495, Aug. 18, 1994]

§ 1952.102 Completion of developmental steps and certification.

(a)(1) In accordance with § 1952.108(a), the Oregon Safe Employment Act, Senate Bill 44, amending Oregon Revised Statutes 654 and 446 and other miscellaneous provisions, was signed by the Governor on July 22, 1973, and carried an effective date of July 1, 1973.

(2) The following differences between the program described in § 1952.105(b)(1) and the program authorized by the State law are approved:

(i) By promulgation of the appropriate regulatory provision, Rule 46–331, and by including a mandatory consultation requirement in its Field Compliance Manual, Oregon provides for employee participation, when there is no employee representative, by requiring the inspector to consult with employees.

(ii) In accordance with ORS, 654.062(3), an additional written request from an employee is required in order to obtain a statement of the reasons why no citation was issued as a result of an employee complaint of unsafe work conditions, which will be subject to evaluation in its administration.

(iii) Section 18 of Oregon's legislation authorizes a stay of the abatement date by operation of law pending a final order of the Board for nonserious violations and for serious violations when the abatement date of the serious violation is specifically contested. An expedited hearing will be requested for serious violations when the abatement date is contested.

(3) The Oregon Safe Employment Act as last amended in the 1981 legislative session included changes renaming the designated enforcement agency, establishment of a director for that agency, authority for requiring certain employers to establish safety and health committees, and limiting penalties for other-than-serious violations in temporary labor camps. The Assistant Secretary approved the amended legislation on September 15, 1982.

(b) In accordance with the requirements of 29 CFR 1952.10 the Oregon State Poster with assurance submitted on September 2, 1975, was approved by the Assistant Secretary on November 5, 1975. The State's revised poster which implemented the assurance was approved by the Assistant Secretary on September 15, 1982.

(c) In accordance with § 1952.108(d) Oregon has completed the training as described.

(d) Oregon has developed and implemented a computerized Management Information System.

(e) In accordance with § 1952.108(f) Oregon has developed and implemented an Affirmative Action Plan.

(f) In accordance with § 1952.108(e) a Statement of Goals and Objectives has been developed by the State and was approved by the Assistant Secretary on June 24, 1977.

(g) The Oregon State Compliance Manual which is modeled after the Federal Field Operations Manual has been developed by the State, and was approved by the Assistant Secretary on June 24, 1977.

(h) In accordance with the requirements of § 1952.4, Oregon State recordkeeping and reporting regulations adopted on June 4, 1974, and subsequently revised, were approved by the Assistant Secretary on August 28, 1980.

(i) In accordance with § 1952.108 (c) and (g), the Oregon Workers' Compensation Department adopted administrative regulations providing procedures for conduct and scheduling of inspections, extension of abatement dates, variances, employee complaints, posting of citations and notices, and voluntary compliance consultation in the public sector, effective July 1, 1974, with revisions incorporated in rules effective August 1, 1982 and August 13, 1982. These regulations with supplemental assurances were approved by the Assistant Secretary on September 15, 1982.

(j) In accordance with § 1952.108(c) the Oregon Workers' Compensation Board adopted rules effective December 20, 1973, governing practice and procedures for contested cases with revisions incorporated in rules effective August 2, 1982. These rules were approved by the Assistant Secretary on September 15, 1982.

(k) The Oregon Workers' Compensation Department submitted rules of the Oregon Bureau of Labor and Industries, the agency assigned responsibility for investigation of complaints of discrimination under the Oregon Safe Employment Act. These regulations and rule effective June 21, 1982, and March 12, 1982 with supplemental assurance were approved by the Assistant Secretary on September 15, 1982.

(l) In accordance with § 1902.34 of this chapter, the Oregon occupational safety and health plan was certified effective September 15, 1982, as having completed all developmental steps specified in the plan as approved on December 28, 1972, on or before December 28, 1975. This certification attests to structural completion, but does not render judgment on adequacy of performance.

[40 FR 24523, June 9, 1975, as amended at 41 FR 8955, Mar. 2, 1976; 41 FR 23671, June 11, 1976; 42 FR 34281, July 29, 1977; 45 FR 60430, Sept. 12, 1980; 47 FR 42104, 42106, Sept. 24, 1982. Redesignated at 52 FR 9162, Mar. 23, 1987, and further redesignated at 59 FR 42495, Aug. 18, 1994]

§ 1952.103 Compliance staffing benchmarks.

Under the terms of the 1978 Court Order in *AFL-CIO* v. *Marshall*, compliance staffing levels (''benchmarks'') necessary for a ''fully effective'' enforcement program were required for each State operating an approved State plan. In October 1992, Oregon completed, in conjunction with OSHA, a reassessment of the health staffing level initially established in 1980 and proposed a revised health benchmark of 28 health compliance officers. Oregon elected to retain the safety benchmark level established in the 1980 Report to the Court of the U.S. District Court for the District of Columbia in 1980 of 47 safety compliance officers. After opportunity for public comment and service on the AFL-CIO, the Assistant Secretary approved these revised staffing requirements on August 11, 1994.

[59 FR 42495, Aug. 18, 1994]

§ 1952.104 Final approval determination.

(a) In accordance with Section 18(e) of the Act and procedures in 29 CFR Part 1902, and after determination that the state met the ''fully effective'' compliance staffing benchmarks as revised in 1994 in response to a court order of the United States District Court for the District of Columbia in *AFL-CIO* v. *Marshall*, (C.A. No. 74–406), and was satisfactorily providing reports to OSHA through participation in the Federal-state Integrated Management Information System, the Assistant Secretary evaluated actual operations under the Oregon State Plan for a period of at least one year following certification of completion of developmental steps. Based on an 18(e) Evaluation Report covering the period October 1, 2002 through September 30, 2003, and after opportunity for public comment, the Assistant Secretary determined that, in operation, Oregon's occupational safety and health program (with the exception of temporary labor camps in agriculture, general industry, construction and logging) is at least as effective as the Federal program in providing safe and healthful employment and places of employment and meets the criteria for final state plan approval in Section 18(e) of the Act and implementing regulations at 29 CFR part 1902. Accordingly, under Section 18(e) of the Act, the Oregon State Plan was granted final approval and concurrent Federal enforcement authority

was relinquished for all worksites covered by the plan (with the exception of temporary labor camps in agriculture, general industry, construction and logging), effective May 12, 2005.

(b) Except as otherwise noted, the plan which has received final approval covers all activities of employers and all places of employment in Oregon. The plan does not cover private sector establishments on Indian reservations and tribal trust lands, including tribal and Indian-owned enterprises; employment at Crater Lake National Park; employment at the U.S. Department of Energy's Albany Research Center (ARC); Federal agencies; the U.S. Postal Service and its contractors; contractors on U.S. military reservations, except those working on U.S. Army Corps of Engineers dam construction projects; and private sector maritime employment on or adjacent to navigable waters, including shipyard operations and marine terminals.

(c) Oregon is required to maintain a state program which is at least as effective as operations under the Federal program; to submit plan supplements in accordance with 29 CFR part 1953; to allocate sufficient safety and health enforcement staff to meet the benchmarks for state staffing established by the U.S. Department of Labor, or any revisions to those benchmarks; and, to furnish such reports in such form as the Assistant Secretary may from time to time require.

[70 FR 24954, May 12, 2005, as amended at 71 FR 2886, Jan. 18, 2006; 71 FR 36990, June 29, 2006]

§ 1952.105 Level of Federal enforcement.

(a) As a result of the Assistant Secretary's determination granting final approval to the Oregon State Plan under Section 18(e) of the Act, effective May 12, 2005, occupational safety and health standards which have been promulgated under Section 6 of the Act (with the exception of those applicable to temporary labor camps in agriculture, general industry, construction and logging) do not apply with respect to issues covered under the Oregon plan. This determination also relinquishes concurrent Federal OSHA authority to issue citations for violations of such standards under Sections 5(a)(2) and 9 of the Act; to conduct inspections and investigations under Section 8 (except those necessary to evaluate the plan under Section 18(f) and other inspections, investigations, or proceedings necessary to carry out Federal responsibilities not specifically preempted by Section 18(e)); to conduct enforcement proceedings in contested cases under Section 10; to institute proceedings to correct imminent dangers under Section 13; and to propose civil penalties or initiate criminal proceedings for violations of the Act under Section 17. The Assistant Secretary retains jurisdiction under the above provisions in any proceeding commenced under Section 9 or 10 before the effective date of the 18(e) determination. The Operational Status Agreement, effective January 23, 1975, and as amended, effective December 12, 1983 and November 27, 1991, is superseded by this action, except that it will continue to apply to temporary labor camps in agriculture, general industry, construction and logging.

(b)(1) In accordance with Section 18(e), final approval relinquishes Federal OSHA authority with regard to occupational safety and health issues covered by the Oregon plan (with the exception of temporary labor camps in agriculture, general industry, construction and logging). OSHA retains full authority over issues which are not subject to state enforcement under the plan. Thus, Federal OSHA retains its authority relative to:

(i) Standards in the maritime issues covered by 29 CFR parts 1915, 1917, 1918, and 1919 (shipyards, marine terminals, longshoring, and gear certification), and enforcement of general industry and construction standards (29 CFR parts 1910 and 1926) appropriate to hazards found in these employments, which have been specifically excluded from coverage under the plan. This includes: Employment on the navigable waters of the U.S.; shipyard and boatyard employment on or immediately adjacent to the navigable waters—including floating vessels, dry docks, graving docks and marine railways—from the front gate of the work site to the U.S. statutory limits; longshoring,

marine terminal and marine grain terminal operations, except production or manufacturing areas and their storage facilities; construction activities emanating from or on floating vessels on the navigable waters of the U.S.; commercial diving originating from an object afloat a navigable waterway; and all other private sector places of employment on or adjacent to navigable waters whenever the activity occurs on or from the water;

(ii) Enforcement of occupational safety and health standards at all private sector establishments, including tribal and Indian-owned enterprises, on all Indian and non-Indian lands within the currently established boundaries of all Indian reservations, including the Warm Springs and Umatilla reservations, and on lands outside these reservations that are held in trust by the Federal government for these tribes. (Businesses owned by Indians or Indian tribes that conduct work activities outside the tribal reservation or trust lands are subject to the same jurisdiction as non-Indian owned businesses.);

(iii) Enforcement of occupational safety and health standards at worksites located within Federal military reservations, except private contractors working on U.S. Army Corps of Engineers dam construction projects, including reconstruction of docks or other appurtenances;

(iv) Enforcement of occupational safety and health standards with regard to employment at Crater Lake National Park;

(v) Enforcement of occupational safety and health standards with regard to employment at the U.S. Department of Energy's Albany Research Center (ARC);

(vi) Enforcement of occupational safety and health standards with regard to all Federal government employers and employees; and the U.S. Postal Service (USPS), including USPS employees, and contract employees and contractor-operated facilities engaged in USPS mail operations.

(2) In addition, any hazard, industry, geographical area, operation or facility over which the state is unable to effectively exercise jurisdiction for reasons which OSHA determines are not related to the required performance or structure of the plan shall be deemed to be an issue not covered by the state plan which has received final approval, and shall be subject to Federal enforcement. Where enforcement jurisdiction is shared between Federal and state authorities for a particular area, project, or facility, in the interest of administrative practicability Federal jurisdiction may be assumed over the entire project or facility. In any of the aforementioned circumstances, Federal enforcement authority may be exercised after consultation with the state designated agency.

(c) Federal authority under provisions of the Act not listed in Section 18(e) is unaffected by final approval of the Oregon State Plan. Thus, for example, the Assistant Secretary retains authority under Section 11(c) of the Act with regard to complaints alleging discrimination against employees because of the exercise of any right afforded to the employee by the Act, although such complaints may be referred to the state for investigation. The Assistant Secretary also retains authority under Section 6 of the Act to promulgate, modify or revoke occupational safety and health standards which address the working conditions of all employees, including those in states which have received an affirmative 18(e) determination, although such standards may not be federally applied. In the event that the state's 18(e) status is subsequently withdrawn and Federal authority reinstated, all Federal standards, including any standards promulgated or modified during the 18(e) period, would be federally enforceable in that state.

(d) As required by Section 18(f) of the Act, OSHA will continue to monitor the operations of the Oregon state program to assure that the provisions of the state plan are substantially complied with and that the program remains at least as effective as the Federal program. Failure by the state to comply with its obligations may result in the suspension or revocation of the final approval determination under Section 18(e), resumption of Federal

enforcement, and/or proceedings for withdrawal of plan approval.

[70 FR 24954, May 12, 2005, as amended at 71 FR 2886, Jan. 18, 2006; 71 FR 36990, June 29, 2006]

§ 1952.106 Where the plan may be inspected.

A copy of the principal documents comprising the plan may be inspected and copied during normal business hours at the following locations:

Office of State Programs, Occupational Safety and Health Administration, U.S. Department of Labor, Room N3700, 200 Constitution Avenue, N.W., Washington, D.C. 20210;

Office of the Regional Administrator, Occupational Safety and Health Administration, U.S. Department of Labor, Suite 715, 1111 Third Avenue, Seattle, Washington 98101–3212; and

Oregon Occupational Safety and Health Division, Department of Consumer and Business Services, Room 430, Labor and Industries Building, 350 Winter Street NE, Salem, Oregon 97310.

[59 FR 42495, Aug. 18, 1994]

§ 1952.107 Changes to approved plans.

In accordance with part 1953 of this chapter, the following Oregon plan changes were approved by the Assistant Secretary:

(a) The State submitted a revised field operations manual patterned after the Federal field operations manual, including modifications, in effect February 11, 1985, which superseded the State's previously approved manual. The Assistant Secretary approved the manual on July 29, 1986.

(b) The State submitted an industrial hygiene technical manual patterned after the Federal manual, including modifications, in effect March 30, 1984. The Assistant Secretary approved the manual on July 29, 1986.

(c) The State submitted an inspection scheduling system which schedules inspections based on lists of employers with a high incidence of workers compensation claims, whose operations are within industries with high injury rates, or which have a high potential for health problems. The Assistant Secretary approved the supplement on July 29, 1986.

(d) The State submitted several changes to its administrative regulations concerning personal sampling, petition to modify abatement dates, penalties for repeat violations, and recordkeeping exemptions. The Assistant Secretary approved these changes on July 29, 1986.

(e) *Legislation*. (1) On March 29, 1994, the Acting Assistant Secretary approved Oregon's revised statutory penalty levels as enacted subject to further action by the State in 1995 to correct the State's omission of revisions of the penalty for posting violations. Aside from posting penalties, Oregon's revised penalty levels are the same as the revised Federal penalty levels contained in section 17 of the Act as amended on November 5, 1990.

(2) [Reserved]

(f) Oregon's State plan changes excluding coverage under the plan of all private sector employment (including tribal and Indian-owned enterprises) on Umatilla Indian reservation or trust lands, by letters of April 29 and July 14, 1997 (see §§ 1952.105); extending coverage under the plan to Superfund sites and private contractors working on U.S. Army Corps of Engineers dam construction projects, as noted in a 1992 Memorandum of Understanding; and specifying four (4) unusual circumstances where Federal enforcement authority may be exercised, as described in a 1991 addendum to the State's operational status agreement, were approved by the Acting Assistant Secretary on September 24, 1997.

(g) Oregon's State plan changes extending Federal enforcement jurisdiction to shore side shipyard and boatyard employment, as described in a 1998 Memorandum of Understanding and addendum to the State's operational status agreement; and to all private sector employment, including tribal and Indian-owned enterprises, on all Indian reservations, including establishments on trust lands outside of reservations, as described in a separate 1998 addendum, were approved by the Assistant Secretary on January 6, 1999.

[51 FR 27025, July 29, 1986. Redesignated at 52 FR 9162, Mar. 23, 1987, as amended at 59 FR 14555, Mar. 29, 1994. Further redesignated at 59 FR 42495, Aug. 18, 1994; 62 FR 49910, Sept. 24, 1997; 65 FR 36620, June 9, 2000]

Subpart E—Utah

§ 1952.110 Description of the plan as initially approved.

(a) The plan identifies the Utah State Industrial Commission as the State agency designated to administer the plan throughout the State. It defines the covered occupational safety and health issues as defined by the Secretary of Labor in 29 CFR 1902.2(c)(1). The plan states that the Utah Industrial Commission currently is exercising statewide inspection authority to enforce many State standards. It describes procedures for the development and promulgation of additional safety standards, rule making power for enforcement of standards, laws, and orders in all places of employment in the State; the procedures for prompt restraint or elimination of imminent danger conditions; and procedures for inspection in response to complaints. The plan includes proposed draft legislation to be considered by the Utah Legislature during its 1973 session amending title 35, chapter 1 of the Utah State Code and related provisions, to bring them into conformity with the requirements of part 1902. Under this legislation all occupational safety and health standards and amendments thereto which have been promulgated by the Secretary of Labor, except those found in 29 CFR 1910.13, 1910.14, 1910.15, and 1910.16 (ship repairing, shipbuilding, shipbreaking, and longshoring) will, after public hearing by the Utah agency be adopted and enforced by that agency. The plan sets forth a timetable for the proposed adoption of standards. The legislation will give the Utah Industrial Commission full authority to administer and enforce all laws, rules, and orders protecting employee safety and health in all places of employment in the State. It also proposes to bring the plan into conformity in procedures for providing prompt and effective standards for the protection of employees against new and unforeseen hazards and for furnishing information to employees on hazards, precautions, symptoms, and emergency treatment; and procedures for variances and the protection of employees from hazards. The proposed legislation will ensure employer and employee representatives an opportunity to accompany inspectors and call attention to possible violations before, during, and after inspections; protection of employees against discharge or discrimination in terms and conditions of employment; notice to employees of their protections and obligations; adequate safeguards to protect trade secrets; prompt notice to employers and employees of alleged violations of standards and abatement requirements; effective sanctions against employers; and employer's right to review alleged violations, abatement periods, and proposed penalties with opportunity for employee participation in the review proceedings.

(b) Included in the plan is a statement of the Governor's support for the proposed legislation and a statement of legal opinion that it will meet the requirements of the Occupational Safety and Health Act of 1970, and is consistent with the Constitution and laws of Utah. The plan sets out goals and provides a timetable for bringing it into full conformity with part 1902 of this chapter upon enactment of the proposed legislation by the State legislature.

(c) The plan includes the following documents as of the date of approval:

(1) The plan with appendixes.

(2) A letter from Carlyle F. Gronning, Chairman of the Utah Industrial Commission to the Office of State Programs with an attached memo sheet of clarifications dated October 27, 1972.

(3) A letter from Carlyle F. Gronning to the Office of State Programs dated December 3, 1972, clarifying issues raised in the plan review.

(4) A letter from Carlyle F. Gronning to the Office of Federal and State Operations dated December 11, 1972, clarifying the remaining issues raised in the review process.

[38 FR 1179, Jan. 10, 1973, as amended at 50 FR 28780, July 16, 1985]

§ 1952.111 Developmental schedule.

The Utah plan is developmental. The following is the schedule of developmental steps provided by the plan:

(a) Introduction of resulting legislation in State Legislature during January 1973.

(b) Expected enactment of the enabling legislation by March 1973.

(c) Formal adoption of Federal standards and revocation of existing Utah State standards by September 1, 1973.

(d) Adoption of safety standards for agriculture by September 1, 1974.

(e) Formal adoption of parts 1903, 1904, and 1905 of this chapter as rules and regulations of Utah by July 1974.

(f) Effective date of new standards, commencement of State enforcement by September 1973.

(g) A management information system by July 1, 1974.

[38 FR 1179, Jan. 10, 1973. Redesignated at 50 FR 28780, July 16, 1985]

§ 1952.112 Completion of developmental steps and certification.

(a) In accordance with the requirements of 29 CFR 1952.110, the Utah State poster was approved by the Assistant Secretary on January 7, 1976.

(b) In accordance with § 1952.113(g), the State has developed and implemented a Management Information System.

(c) In accordance with the requirements of 29 CFR 1952.110(b), the Utah Occupational Safety and Health Act, (chapter 9 of title 35 of the Utah State Code) effective July 1, 1973, was approved July 30, 1974.

(d) In accordance with the requirements of 29 CFR 1952.113(e), State regulations substantially identical to 29 CFR parts 1903, 1904, and 1905, have been adopted by the State and approved by the Assistant Secretary on March 3, 1976.

(e) The State has developed and implemented rules of procedure for its review commission, consistent with present law.

(f) The State plan has been amended to include an Affirmative Action Plan outlining the State's policy of equal employment opportunity.

(g) In accordance with 29 CFR 1952.113 Utah has promulgated standards at least as effective as comparable Federal standards as set out in 41 FR 11635, regarding all issues covered by the plan.

(h) In accordance with § 1902.34 of this chapter, the Utah occupational safety and health plan was certified, effective as of the date of publication on November 19, 1976, as having completed all developmental steps specified in the plan as approved on January 4, 1973 on or before January 3, 1976.

[41 FR 1904, Jan. 13, 1976, as amended at 41 FR 10064, Mar. 9, 1976; 41 FR 15005, Apr. 9, 1976; 41 FR 46599, Oct. 22, 1976; 41 FR 51016, Nov. 19, 1976. Redesignated and amended at 50 FR 28780, July 16, 1985]

§ 1952.113 Compliance staffing benchmarks.

Under the terms of the 1978 Court Order in *AFL-CIO* v. *Marshall*, compliance staffing levels (benchmarks) necessary for a ''fully effective'' enforcement program were required to be established for each State operating an approved State plan. In September 1984, Utah, in conjunction with OSHA, completed a reassessment of the levels initially established in 1980 and proposed revised compliance staffing benchmarks of 10 safety and 9 health compliance officers. After opportunity for public comments and service on the AFL-CIO, the Assistant Secretary approved these revised staffing requirements effective July 16, 1985.

[50 FR 28780, July 16, 1985]

§ 1952.114 Final approval determination.

(a) In accordance with section 18(e) of the Act and procedures in 29 CFR part 1902, and after determination that the State met the ''fully effective'' compliance staffing benchmarks as revised in 1984 in response to a Court Order in *AFL-CIO* v. *Marshall* (CA 74–406), and was satisfactorily providing reports to OSHA through participation in the Federal-State Unified Management Information System, the Assistant Secretary evaluated actual operations under the Utah State plan for a period of at least one year following certification of completion of developmental steps (41 FR 51014). Based on the 18(e) Evaluation Report for the period of October 1, 1982 through March 31, 1984, and after opportunity for public comment, the Assistant Secretary determined that in operation the State of Utah's occupational safety health program is at least as effective as the Federal program in providing safe and healthful employment and places of employment and meets the criteria for

final State plan approval in section 18(e) of the Act and implementing regulations at 29 CFR part 1902. Accordingly, the Utah plan was granted final approval and concurrent Federal enforcement authority was relinquished under section 18(e) of the Act effective July 16, 1985.

(b) Except as otherwise noted, the plan which has received final approval covers all activities of employers and all places of employment in Utah. The plan does not cover private sector maritime employment; employment on Hill Air Force Base; employment at the U.S. Department of Energy's Naval Petroleum and Oil Shale Reserve, to the extent that it remains a U.S. DOE facility; Federal government employers and employees; the U.S. Postal Service (USPS), including USPS employees, and contract employees and contractor-operated facilities engaged in USPS mail operations; the enforcement of the field sanitation standard, 29 CFR 1928.110, and the enforcement of the temporary labor camps standard, 29 CFR 1910.142, with respect to any agricultural establishment where employees are engaged in ''agricultural employment'' within the meaning of the Migrant and Seasonal Agricultural Worker Protection Act, 29 U.S.C. 1802(3), regardless of the number of employees, including employees engaged in hand packing of produce into containers, whether done on the ground, on a moving machine, or in a temporary packing shed, except that Utah retains enforcement responsibility over agricultural temporary labor camps for employees engaged in egg, poultry, or red meat production, or the post-harvest processing of agricultural or horticultural commodities.

(c) Utah is required to maintain a State program which is at least as effective as operations under the Federal program; to submit plan supplements in accordance with 29 CFR part 1953; to allocate sufficient safety and health enforcement staff to meet the benchmarks for State staffing established by the U.S. Department of Labor, or any revisions to those benchmarks; and, to furnish such reports in such form as the Assistant Secretary may from time to time require.

[50 FR 28780, July 16, 1985, as amended at 62 FR 2560, Jan. 17, 1997; 65 FR 36620, June 9, 2000; 71 FR 36990, June 29, 2006]

§ 1952.115 Level of Federal enforcement.

(a) As a result of the Assistant Secretary's determination granting final approval of the Utah plan under section 18(e) of the Act, effective July 16, 1985, occupational safety and health standards which have been promulgated under section 6 of the Act do not apply with respect to issues covered under the Utah plan. This determination also relinquishes concurrent Federal OSHA authority to issue citations for violations of such standards under sections 5(a)(2) and (9) of the Act; to conduct inspections and investigations under section 8 (except those necessary to conduct evaluation of the plan under section 18(f) and other inspections, investigations, or proceedings necessary to carry out Federal responsibilities not specifically preempted by section 18(e)); to conduct enforcement proceedings in contested cases under section 10; to institute proceedings to correct imminent dangers under section 13; and to propose civil penalties or initiate criminal proceedings for violations of the Federal Act under section 17. The Assistant Secretary retains jurisdiction under the above provisions in any proceeding commenced under section 9 or 10 before the effective date of the 18(e) determination.

(b) In accordance with section 18(e), final approval relinquishes Federal OSHA authority only with regard to occupational safety and health issues covered by the Utah plan. OSHA retains full authority over issues which are not subject to State enforcement under the plan. Thus, Federal OSHA retains its authority relative to safety and health enforcement in private sector maritime activities and will continue to enforce all provisions of the Act, rules or orders, and all Federal standards, current or future, specifically directed to maritime employment (29 CFR Part 1915, shipyard employment; Part 1917, marine terminals; Part 1918, longshoring; Part 1919, gear certification), as well as provisions of

general industry and construction standards (29 CFR Parts 1910 and 1926) appropriate to hazards found in these employments. Federal jurisdiction is retained and exercised by the Employment Standards Administration, U.S. Department of Labor, (Secretary's Order 5–96, dated December 27, 1996) with respect to the field sanitation standard, 29 CFR 1928.110, and the enforcement of the temporary labor camps standard, 29 CFR 1910.142, in agriculture, as described in §1952.114(b). Federal jurisdiction is also retained with regard to: all employment on the Hill Air Force Base; all employment at the U.S. Department of Energy's Naval Petroleum and Oil Shale Reserve, to the extent that it remains a U.S. DOE facility; Federal government employers and employees; and the U.S. Postal Service (USPS), including USPS employees, and contract employees and contractor-operated facilities engaged in USPS mail operations. Where enforcement jurisdiction is shared between Federal and State authorities for a particular area, project, or facility, in the interest of administrative practicability, Federal jurisdiction may be assumed over the entire project or facility. In either of the two aforementioned circumstances, Federal enforcement may be exercised immediately upon agreement between Federal and State OSHA.

(c) Federal authority under provisions of the Act not listed in section 18(e) is unaffected by final approval of the plan. Thus, for example, the Assistant Secretary retains his authority under section 11(c) of the Act with regard to complaints alleging discrimination against employees because of the exercise of any right afforded to the employee by the Act, although such complaints may be referred to the State for investigation. The Assistant Secretary also retains his authority under section 6 of the Act to promulgate, modify or revoke occupational safety and health standards which address the working conditions of all employees, including those in States which have received an affirmative 18(e) determination, although such standards may not be Federally applied. In the event that the State's 18(e) status is subsequently withdrawn and Federal authority reinstated, all Federal standards, including any standards promulgated or modified during the 18(e) period, would be Federally enforceable in that State.

(d) As required by section 18(f) of the Act, OSHA will continue to monitor the operations of the Utah State program to assure that the provisions of the State plan are substantially complied with and that the program remains at least as effective as the Federal program. Failure by the State to comply with its obligations may result in the revocation of the final determination under section 18(e), resumption of Federal enforcement and/or proceedings for withdrawal of plan approval.

[50 FR 28780, July 16, 1985, as amended at 62 FR 2560, Jan. 17, 1997; 65 FR 36620, June 9, 2000; 71 FR 36990, June 29, 2006]

§ 1952.116 Where the plan may be inspected.

A copy of the principal documents comprising the plan may be inspected and copied during normal business hours at the following locations:

Office of State Programs, Occupational Safety and Health Administration, U.S. Department of Labor, 200 Constitution Avenue NW., Room N3700, Washington, DC 20210;

Office of the Regional Administrator, Occupational Safety and Health Administration, U.S. Department of Labor, 1999 Broadway Suite 1690, Denver, Colorado 80202–5716; and

Office of the Commissioner, Labor Commission of Utah, 160 East 300 South, 3rd Floor, P.O. Box 146650, Salt Lake City, Utah 84114–6650.

[65 FR 36620, June 9, 2000]

§ 1952.117 Changes to approved plans.

In accordance with part 1953 of this chapter, the following Utah plan changes were approved by the Assistant Secretary:

(a) *Legislation*. (1) The State submitted an amendment to the Utah Administrative Rulemaking Act (chapter 46a, title 63, Utah Code Annotated 1953), which became effective on April 29, 1985, which provides for rulemaking procedures similar to those of Federal

OSHA in sections pertaining to expansion of definitions; availability of proposed rule to the public; a set time period allowed for public comment; the time period provided for a requested hearing to be held; and, provisions for determining the validity or applicability of a rule in an action for declaratory judgment. The Assistant Secretary approved the amendment on October 24, 1988.

(2) The State submitted amendments to its Occupational Safety and Health Act (chapter 69, Utah Code Annotated 1953), which became effective on April 29, 1985, which provide for seeking administrative warrants, clarify review procedures for the hearing examiner, provide for issuing a permanent standard no later than 120 days after publication of an emergency standard, and remove inconsistent requirements for adopting rules and regulations. The Assistant Secretary approved the amendments on October 24, 1988.

(3) On March 29, 1994, the Assistant Secretary approved Utah's revised statutory penalty levels which are the same as the revised Federal penalty levels contained in section 17 of the Act as amended on November 5, 1990.

(b) *The Voluntary Protection Program.* On December 30, 1993, the Assistant Secretary approved Utah's plan supplement, which is generally identical to the Federal Voluntary Protection Program.

(c) *Temporary labor camps/field sanitation.* Effective February 3, 1997, the Assistant Secretary approved Utah's plan amendment, dated July 31, 1996, relinquishing coverage for the issues of field sanitation (29 CFR 1928.110) and temporary labor camps (29 CFR 1910.142) in agriculture (except for agricultural temporary labor camps associated with egg, poultry or red meat production, or the post-harvest processing of agricultural or horticultural commodities.) The Employment Standards Administration, U.S. Department of Labor, has assumed responsibility for enforcement of these Federal OSHA standards in agriculture in Utah pursuant to Secretary of Labor's Order 5–96, dated December 27, 1996.

[53 FR 43689, Oct. 28, 1988, as amended at 59 FR 2295, Jan. 14, 1994; 59 FR 14555, Mar. 29, 1994; 62 FR 2561, Jan. 17, 1997]

Subpart F—Washington

SOURCE: 38 FR 2422, Jan. 26, 1973, unless otherwise noted.

§ 1952.120 Description of the plan.

(a)(1) The plan identifies the Department of Labor and Industries as the State agency designated to administer the plan throughout the State. It adopts the definition of occupational safety and health issues expressed in § 1902.2(c)(1) of this chapter. The plan contains a standards comparison of existing and proposed State standards with Federal standards. All standards, except those found in 29 CFR parts 1915, 1916, 1917, and 1918 (ship repairing, shipbuilding, shipbreaking and longshoring) will be adopted and enforced after public hearings within 1 year after the standards are found to be at least as effective by the Secretary of Labor.

(2) The plan provides a description of personnel employed under a merit system; the coverage of employees of political subdivisions, procedures for the development and promulgation of standards, including standards for protection of employees against new and unforeseen hazards; and procedures for prompt restraint or elimination of imminent danger situations.

(b)(1) The plan includes proposed draft legislation to be considered by the Washington Legislature during its 1973 legislative session creating a new chapter in title 49, Revised Code of Washington and repealing existing provisions, to bring it into conformity with the requirements of part 1902. Under the proposed legislation the Department of Labor and Industries will have full authority to enforce and administer laws respecting safety and health of employees in all workplaces of the State. The legislation further proposes to bring the State into conformity in areas such as variances and protection of employees from hazards.

(2) The legislation is also intended to insure inspections in response to complaints; give employer and employee representatives an opportunity to accompany inspectors in order to aid inspections; notification of employees or

their representatives when no compliance action is taken as a result of alleged violations, including informal review; notification of employees of their protections and obligations; protection of employees against discharge or discrimination in terms and conditions of employment; adequate safeguards to protect trade secrets; provision for prompt notice to employers and employees of alleged violations of standards and abatement requirements; effective sanctions against employers for violations of standards and orders; employer right of review to the Board of Industrial Insurance Appeals and then to the courts, and employee participation in review proceedings. The plan also proposes to develop a program to encourage voluntary compliance by employers and employees, including provision for on-site consultations.

(c) The plan includes a statement of the Governor's support for the legislation and a legal opinion from the State attorney general that the legislation will meet the requirements of the Occupational Safety and Health Act of 1970 and is consistent with the Constitution and laws of Washington. The plan sets out goals and provides a timetable for bringing it into full conformity with part 1902 upon enactment of the proposed legislation.

(d) The Washington plan includes the following documents as of the date of approval:

(1) The plan description documents including draft legislation and appendices in two volumes;

(2) Appendix 18, Standards Comparison;

(3) Letter from William C. Jacobs, Director, Department of Labor and Industries to James W. Lake, Assistant Regional Director, OSHA, August 11, 1972, submitting justifications for discretionary sanctions for serious violations and changing section 18(5) of WISHA to conform to the mandatory civil penalty for posting violations under OSHA;

(4) Letter from John E. Hillier, Supervisor of Safety, Department of Labor and Industries to Thomas C. Brown, Director, Office of Federal and State Operations, August 19, 1972, submitting justifications on the sanction system and the review procedure in the Washington plan;

(5) Letter from William C. Jacobs to Thomas C. Brown, September 19, 1972, justifying the sanction system as proposed by Washington;

(6) Letter from John E. Hillier to Thomas C. Brown, October 2, 1972, providing a detailed explanation of the procedure for review of citations proposed by Washington;

(7) Letter from Stephen C. Way, Assistant Attorney General to Thomas C. Brown, October 19, 1972, clarifying several issues raised during the review process including revision in the draft legislation;

(8) Letter from Stephen C. Way to the Assistant Secretary, January 5, 1973, clarifying most of the remaining issues raised during the review process;

(9) Letter from William C. Jacobs to the Assistant Secretary, January 12, 1973, revising the penalty structure in the draft legislation.

(e) The public comments will also be available for inspection and copying with the plan documents.

§ 1952.121 Where the plan may be inspected.

A copy of the principal documents comprising the plan may be inspected and copied during normal business hours at the following locations:

Office of State Programs, Occupational Safety and Health Administration, U.S. Department of Labor, 200 Constitution Avenue NW., Room N3700, Washington, DC 20210;

Office of the Regional Administrator, Occupational Safety and Health Administration, U.S. Department of Labor, Suite 715, 1111 Third Avenue, Seattle, Washington, 98101–3212;

Office of the Director, Washington Department of Labor and Industries, General Administration Building, P.O. Box 44001, Olympia, Washington 98504–4001; and

Office of the Director, Washington Department of Labor and Industries, General Administration Building, 7273 Linderson Way, SW., Tumwater, Washington, 98502.

[65 FR 36620, June 9, 2000]

§ 1952.122 Level of Federal enforcement.

(a) Pursuant to §§ 1902.20(b)(1)(iii) and 1954.3 of this chapter under which an agreement has been entered into with

Washington, effective May 30, 1975, and amended several times effective October 2, 1979, May 29, 1981, April 3, 1987, and October 27, 1989; and based on a determination that Washington is operational in the issues covered by the Washington occupational safety and health plan, discretionary Federal enforcement authority under section 18(e) of the Act (29 U.S.C. 667(e)) will not be initiated with regard to Federal occupational safety and health standards in issues covered under 29 CFR Parts 1910 and 1926, except as provided in this section. The U.S. Department of Labor will continue to exercise authority, among other things, with regard to:

(1) Enforcement of new Federal standards until the State adopts a comparable standard;

(2) Enforcement of all Federal standards, current and future, in the maritime issues covered by 29 CFR Parts 1915, 1917, 1918, and 1919 (shipyards, marine terminals, longshoring, and gear certification), and enforcement of general industry and construction standards (29 CFR Parts 1910 and 1926) appropriate to hazards found in these employments, as they relate to employment under the exclusive jurisdiction of the Federal government on the navigable waters of the United States, including but not limited to dry docks or graving docks, marine railways or similar conveyances (e.g., syncrolifts and elevator lifts), fuel operations, drilling platforms or rigs, dredging and pile driving, and diving;

(3) Complaints and violations of the discrimination provisions of section 11(c) of the Act (29 U.S.C. 660(c));

(4) Enforcement in situations where the State is refused entry and is unable to obtain a warrant or enforce its right of entry;

(5) Enforcement of unique and complex standards as determined by the Assistant Secretary;

(6) Enforcement in situations when the State is unable to exercise its enforcement authority fully or effectively;

(7) Enforcement of occupational safety and health standards within the borders of all military reservations;

(8) Enforcement at establishments of employers who are federally recognized Indian Tribes or enrolled members of these Tribes—including establishments of the Yakama Indian Nation and Colville Confederated Tribes, which were previously excluded by the State in 1987 and 1989 respectively—where such establishments are located within the borders of Indian reservations, or on lands outside these reservations that are held in trust by the Federal government for these Tribes. (Nonmember private sector or State and local government employers located within a reservation or on Trust lands, and member employers located outside the territorial boundaries of a reservation or Trust lands, remain the responsibility of the State.);

(9) Investigations and inspections for the purpose of evaluation of the Washington plan under sections 18(e) and (f) of the Act (29 U.S.C. 667(e) and (f)); and

(10) Enforcement of occupational safety and health standards with regard to all Federal government employers and employees; and the U.S. Postal Service (USPS), including USPS employees, and contract employees and contractor-operated facilities engaged in USPS mail operations.

(b) The OSHA Regional Administrator will make a prompt recommendation for the resumption of the exercise of Federal enforcement authority under section 18(e) of the Act (29 U.S.C. 667(e)) whenever, and to the degree, necessary to assure occupational safety and health protection to employees in Washington.

[65 FR 36621, June 9, 2000, as amended at 69 FR 20829, Apr. 19, 2004]

§ 1952.123 Developmental schedule.

The Washington State plan is developmental. The following is the developmental schedule as provided by the plan:

(a) Introduction of the legislation in the 1973 Legislative Session;

(b) Public hearings and promulgation of occupational safety and health standards within 1 year after the proposed standards are found to be at least as effective by the Secretary of Labor;

(c) Promulgation and adoption of rules and regulations concerning procedures for assuming all obligations and functions arising from the legislation within 1 year of its effective date;

(d) Development and implementation of a data processing system (M.I.S.) 6 months after approval of the plan;

(e) Achievement of training objectives by December 31, 1973;

(f) Upgrading of the Division of Safety personnel following legislative action on recommendations submitted to the 1973 Legislature.

§ 1952.124 Completion of developmental steps and certification.

(a) In accordance with the requirements of § 1952.123(a) the Washington Industrial Safety and Health Act of 1973, hereinafter referred to as WISHA (S.B. 2386, RCW chapter 49.17), signed by the Governor on March 9, 1973, effective on June 7, 1973, was approved July 3, 1974 (39 FR 25326).

(b) In accordance with the requirements of § 1952.10, the Washington State Poster submitted on October 6, 1975, was approved by the Assistant Secretary on December 17, 1975. In accordance with the State's formal assurance, the poster was revised, effective June 1, 1982, to specify that public employees can only file discrimination complaints with the State because Federal jurisdiction under section 11(c) of the Act does not apply to State public employees. This revised poster was approved by the Assistant Secretary on August 3, 1983.

(c) The Washington State Compliance Operations Manual, modeled after the Federal Field Operations Manual, was developed by the State and was approved by the Assistant Secretary on March 19, 1976. The manual was subsequently revised on July 23, October 20, and December 1980, and was approved by the Assistant Secretary on January 26, 1982. A March 1, 1983, revision to the manual which provided clarification of the difference between temporary and permanent variances in accordance with State formal assurances was approved by the Assistant Secretary on August 3, 1983.

(d) In accordance with § 1952.123(c), Washington regulations covering Reassumption of Jurisdiction were adopted by June 7, 1974, and were approved by the Assistant Secretary on March 19, 1976.

(e) In accordance with § 1952.123(e) Washington has completed the training as described in this section.

(f) In accordance with § 1952.123(d) Washington has developed and implemented a computerized Management Information System.

(g) In accordance with § 1952.123(f) Washington has completed the upgrading of salaries of safety personnel.

(h) In accordance with § 1952.123(c) Washington has adopted rules and regulations covering recordkeeping and reporting requirements.

(i) An industrial hygiene operations manual, effective March 1, 1980, with revisions effective July 1 and September 21, 1981, modeled after the Federal manual was approved by the Assistant Secretary on January 26, 1982.

(j) In accordance with § 1952.123(c), the Washington Department of Labor and Industries adopted administrative regulations providing procedures for conduct and scheduling of inspections, extension of abatement dates, variances, employee complaints of hazards and discrimination, posting of citations and notices, effective May 14, 1975, and revisions effective December 31, 1980, and July 22, 1981. Likewise, the Washington Board of Industrial Insurance Appeals adopted rules effective April 4, 1975, governing practice and procedure for contested cases with revision effective March 26, 1976. These regulations and rules were approved by the Assistant Secretary on January 26, 1982. In accordance with State formal assurances the State added provision to the regulations effective July 11, 1982, to require posting of redetermination notices, settlements, notices related to appeals; deleting an incorrect reference to administrative hearing procedures used in workers compensation cases; requiring settlement agreements to address abatement dates and penalty payments; and deleting a requirement to put discrimination complaints in writing. These changes were approved by the Assistant Secretary on August 3, 1983.

(k) In accordance with § 1902.34 of this chapter, the Washington occupational safety and health plan was certified effective January 26, 1982, as having completed all developmental steps specified in the plan as approved on January 26,

1973 on or before January 26, 1976. This certification attests to structural completion, but does not render judgment on adequacy of performance.

[40 FR 59345, Dec. 23, 1975, as amended at 41 FR 12655, Mar. 26, 1976; 41 FR 17549, Apr. 27, 1976; 41 FR 23672, June 11, 1976; 41 FR 51016, Nov. 19, 1976; 47 FR 5889, 5891, Feb. 9, 1982; 48 FR 37025, Aug. 16, 1983]

§ 1952.125 Changes to approved plans.

(a) In accordance with part 1953 of this chapter, the following Washington plan changes were approved by the Assistant Secretary on August 4, 1980.

(b) In accordance with subpart E of part 1953 of this chapter, the Assistant Secretary has approved the participation of the Washington Department of Labor and Industries in its November 17, 1989, agreement with the Colville Confederated Tribes, concerning an internal occupational safety and health program on the Colville reservation. Under this agreement, Washington exercises enforcement authority over non-Indian-owned workplaces under the legal authority set forth in its State plan. (Federal OSHA will exercise enforcement authority over Indian-owned or Tribal workplaces, as provided in 29 CFR 1952.122.)

(c) *Legislation*. (1) On March 29, 1994, the Assistant Secretary approved Washington's revised statutory penalty levels which are the same as the revised Federal penalty levels contained in section 17 of the Act as amended on November 5, 1990.

[45 FR 53459, Aug. 12, 1980, as amended at 55 FR 37467, Sept. 12, 1990; 59 FR 14555, Mar. 29, 1994; 67 FR 60129, Sept. 25, 2002]

Subparts G–H [Reserved]

Subpart I—North Carolina

§ 1952.150 Description of the plan as initially approved.

(a) The Department of Labor has been designated by the Governor of North Carolina to administer the plan throughout the State. The Department of Labor has entered into an agreement with the State Board of Health whereby the State Board of Health is to assist the Department of Labor in the administration and enforcement of occupational health standards. However, full authority for the promulgation and enforcement of occupational safety and health standards remains with the Department of Labor. The plan defines the covered occupational safety and health issues as defined by the Secretary of Labor in §1902.2(c)(1) of this chapter. Moreover, it is understood that the plan will cover all employers and employees in the State except those whose working conditions are not covered by the Federal act by virtue of section 4(b)(1) thereof, dockside maritime and domestic workers. The Department of Labor is currently exercising statewide inspection authority to enforce many State standards. The plan describes procedures for the development and promulgation of additional laws, and orders in all places of employment in the State; the procedures for prompt restraint or elimination of imminent danger conditions; and procedures for inspections in response to complaints.

(b) The plan includes proposed draft legislation to be considered by the North Carolina General Assembly during its 1973 session. Such legislation is designed to implement major portions of the plan and to bring it into conformity with the requirements of part 1902 of this chapter.

(c) Under this legislation, all occupational safety and health standards and amendments thereto which have been promulgated by the Secretary of Labor, except those found in parts 1915, 1916, 1917, and 1918 of this chapter (ship repairing, shipbuilding, shipbreaking, and longshoring) will be adopted upon ratification of the proposed legislation. Enforcement of such standards will take place 90 days thereafter.

(d) The legislation will give the Department of Labor full authority to administer and enforce all laws, rules and orders protecting employee safety and health in all places of employment in the State. It also proposes to bring the plan into conformity in procedures for providing prompt and effective standards for the protection of employees against new and unforeseen hazards and for furnishing information to employees on hazards, precautions, symptoms, and emergency treatment; and procedures for variances.

(e) The proposed legislation will insure employer and employee representatives an opportunity to accompany inspectors and to call attention to possible violations before, during, and after inspections; protection of employees against discharge or discrimination in terms and conditions of employment; notice to employees of their protections and obligations; adequate safeguards to protect trade secrets; prompt notice to employers and employees of alleged violations of standards and abatement requirements; effective sanctions against employers; and employer's right to review of alleged violations, abatement periods, and proposed penalties with opportunity for employee participation in the review proceedings.

(f) The Plan also provides for the development of a program to encourage voluntary compliance by employers and employees.

(g) The Plan includes a statement of the Governor's support for the proposed legislation and a statement of legal opinion that it will meet the requirements of the Occupational Safety and Health Act of 1970, and is consistent with the constitution and laws of North Carolina. The Plan sets out goals and provides a timetable for bringing it into full conformity with part 1902 upon enactment of the proposed legislation by the State legislature.

(h) The North Carolina Plan includes the following documents as of the date of approval:

(1) The Plan description document with appendixes.

(2) Telegram from the Governor of North Carolina, James E. Holshouser, Jr., expressing his full support for the Occupational Safety and Health Act of North Carolina and his anticipation of its passage during the 1973 session of the North Carolina General Assembly.

(3) Letter from W. C. Creel, Commissioner, North Carolina Department of Labor, to Mr. Thomas C. Brown, Director, Federal and State Operations, clarifying several issues raised during the review process.

(4) Also available for inspection and copying with the Plan documents will be the public comments received during the review process.

[38 FR 3042, Feb. 1, 1973, as amended at 51 FR 2488, Jan. 17, 1986]

§ 1952.151 Developmental schedule.

The North Carolina Plan is developmental. The following is the schedule of the developmental steps provided by the Plan:

(a) It is estimated that the draft bill will be enacted by April 1, 1973.

(b) The Federal standards will be adopted on the date the bill is ratified.

(c) A refresher course for inspectors will begin sixty (60) days after the enactment of the draft bill.

(d) Merit system examinations of current department of labor personnel will be completed within sixty (60) days after Federal acceptance of the State Plan.

(e) The hiring of new personnel in both the department of labor and the State board of health will begin thirty (30) days after the department is assured that State and Federal funds are available. Tentative plans provide for both agencies to be fully staffed within six (6) months after the enactment of the bill.

(f) All new personnel will receive official OSHA training in the National Institute of Training. Employment dates will generally correspond to dates established for the Institute schools.

(g) Employers and employees will be notified of the availability of consultative services within ninety (90) days after ratification of the draft bill.

(h) The Department of Labor will initiate a developmental plan for a ''Management Information System'' on the date of Plan approval. This program is to be fully implemented in ninety (90) days after enactment of the proposed legislation.

(i) The enforcement of standards will begin ninety (90) days after ratification of the draft bill.

(j) A State Compliance Operations Manual is to be completed ninety (90) days after ratification of the draft bill.

(k) The Commissioner will begin issuing administrative ''rules and regulations'' when necessary as stated in the draft bill ninety (90) days after

ratification of the draft bill. Meanwhile, the Federal rules and regulations will be adopted and applied until the State rules and regulations are acceptable.

(l) Safety programs for State employees will begin one (1) year and ninety (90) days after ratification of the draft bill, with full implementation scheduled a year later.

(m) Safety programs for large counties and municipalities with over 10,000 population will be initiated ninety (90) days after draft bill ratification. Full implementation will occur one (1) year later.

(n) Safety programs for other counties and municipalities with 4,000 to 10,000 population will be initiated within two (2) years and ninety (90) days after Plan grant is approved. Full implementation will occur three (3) years after grant award.

(o) Safety programs for towns and other governing units having between 1,000 and 4,000 population will be initiated within two (2) years and ninety (90) days after Plan grant is approved, with full implementation within three years after grant award.

(p) A State ''Safety and Health'' poster will be prepared within ninety (90) days after ratification of the draft bill.

(q) The State of North Carolina will be fully operational with respect to agriculture 1 year and 90 days after enactment of the draft bill.

[38 FR 3042, Feb. 1, 1973. Redesignated at 51 FR 2488, Jan. 17, 1986]

§ 1952.152 Completion of developmental steps and certification.

(a) In accordance with § 1952.153(a) the Occupational Safety and Health Act of North Carolina (S.B. 342, Chapter 295) was enacted by the State legislature on May 1, 1973, and became effective on July 1, 1973.

(b) In accordance with § 1952.153(b), the North Carolina occupational safety and health standards identical to Federal standards (thru 12–3–74) have been promulgated and approved, as revised, by the Assistant Regional Director on March 11, 1975 (40 FR 11420).

(c)(1) In accordance with § 1952.153(p) and the requirements of 29 CFR 1952.10, the North Carolina poster for private employers was approved by the Assistant Secretary on April 17, 1975.

(2) In accordance with § 1952.153(p) and the requirements of 29 CFR 1952.10, the North Carolina poster for public employees was approved by the Assistant Secretary on April 20, 1976.

(d) In accordance with § 1952.153(q) full coverage of agricultural workers by the North Carolina Department of Labor began on April 1, 1974.

(e) The State plan has been amended to include an Affirmative Action Plan in which the State outlines its policy of equal employment opportunity.

(f) In accordance with § 1952.153(c) all North Carolina compliance personnel have completed refresher training courses.

(g) In accordance with § 1952.153(d) all occupational safety and health personnel in the North Carolina Department of Labor are covered by the State merit system which the U.S. Civil Service Commission (by letter dated January 22, 1976) has found to be in substantial conformity with the ''Standards for a Merit System of Personnel Administration.'' Agreement with the North Carolina Department of Human Resources specifies that all health personnel cooperating in the State occupational safety and health program are likewise covered by the State merit system.

(h) In accordance with § 1952.153(f) all North Carolina compliance personnel have attended basic training courses at the OSHA Institute in Chicago.

(i) In accordance with § 1952.153(g) the North Carolina Department of Labor has publicly disseminated information on the availability of consultative services.

(j) In accordance with § 1952.153(h) a manual Management Information System which provides the quarterly statistical reports required by the Assistant Secretary as well as internal management data has been developed and is fully operational.

(k) In accordance with § 1952.153(i) State enforcement of standards began on July 1, 1973.

(l) In accordance with § 1952.153(k) the State has promulgated the following administrative ''rules and regulations'':

(1) Regulation 7B.0100: Inspections, Citations and Proposed Penalties.

(2) Regulation 7B.0300: Recording and Reporting of Occupational Injuries and Illnesses.

(3) Regulation 7B.0400: Rules of Practice for Variances.

(4) Regulation 7B.0500: Rules of Procedure for Promulgating, Modifying or Revoking Occupational Safety and Health Standards.

(5) Regulation 7B.0700: State Advisory Council on Occupational Safety and Health.

(m) The North Carolina Occupational Safety and Health Review Board has adopted Rules of Procedure governing its review of contested cases.

(n) In accord with § 1952.153(*l*), Safety programs for State employees were initiated and implemented.

(o) In accord with § 1952.153(m), Safety programs for large counties and municipalities with over 10,000 population were initiated and implemented.

(p) In accord with § 1952.153(n), Safety programs for other counties and municipalities with 4,000 to 10,000 population were initiated and implemented.

(q) In accord with § 1952.153(o), Safety programs for towns and other governing units having between 1,000 and 4,000 population were initiated and implemented.

(r) In accord with § 1952.153(e) and § 1902.3(d) the North Carolina occupational safety and health program has been fully staffed.

(s) In accordance with § 1952.153(j) the State has developed and amended a Compliance Operations Manual which defines the procedures and guidelines to be used by the North Carolina compliance staff in carrying out the goals of the program.

(t) In accordance with § 1902.34 of this chapter, the North Carolina occupational safety and health plan was certified, effective October 5, 1976, as having completed on or before March 31, 1976 all development steps specified in the plan as approved on January 26, 1973.

[40 FR 18429, Apr. 28, 1975, as amended at 41 FR 17547, Apr. 27, 1976; 41 FR 22562, June 4, 1976; 41 FR 41083, Sept. 21, 1976; 41 FR 43897–43900, 43902, Oct. 5, 1976. Redesignated at 51 FR 2488, Jan. 17, 1986]

§ 1952.153 Compliance staffing benchmarks.

Under the terms of the 1978 Court Order in *AFL-CIO* v. *Marshall*, compliance staffing levels (''benchmarks'') necessary for a ''fully effective'' enforcement program were required for each State operating an approved State plan. In September 1984, North Carolina, in conjunction with OSHA, completed a reassessment of the levels initially established in 1980 and proposed revised benchmarks of 50 safety and 27 health compliance officers. After opportunity for public comment and service on the AFL-CIO, the Assistant Secretary approved these revised staffing requirements on January 17, 1986. In June 1990, North Carolina reconsidered the information utilized in the initial revision of its 1980 benchmarks and determined that changes in local conditions and improved inspection data warranted further revision of its benchmarks to 64 safety inspectors and 50 industrial hygienists. After opportunity for public comment and service on the AFL-CIO, the Assistant Secretary approved these revised staffing requirements on June 4, 1996.

[61 FR 28055, June 4, 1996]

§ 1952.154 Final approval determination.

(a) In accordance with section 18(e) of the Act and procedures in 29 CFR part 1902, and after determination that the State met the ''fully effective'' compliance staffing benchmarks as revised in 1984 and 1996 in response to a court order in *AFL-CIO* v. *Marshall*, 570 F.2d 1030 (D.C. Cir. 1978), and was satisfactorily providing reports to OSHA through participation in the Federal-State Integrated Management Information System, the Assistant Secretary evaluated actual operations under the North Carolina State plan for a period of at least one year following certification of completion of developmental steps (41 FR 43896). Based on the Biennial Evaluation Report covering the period of October 1, 1993, through September 30, 1995, an 18(e) Evaluation Report covering the period October 1, 1995, through June 30, 1996, and after opportunity for public comment, the Assistant Secretary determined that in

operation the State of North Carolina's occupational safety and health program is at least as effective as the Federal program in providing safe and healthful employment and places of employment and meets the criteria for final State plan approval in section 18(e) of the Act and implementing regulations at 29 CFR part 1902. Accordingly, the North Carolina plan was granted final approval and concurrent Federal enforcement authority was relinquished under section 18(e) of the Act effective December 10, 1996.

(b) Except as otherwise noted, the plan which has received final approval covers all activities of employers and all places of employment in North Carolina. The plan does not cover Federal government employers and employees; the U.S. Postal Service (USPS), including USPS employees, and contract employees and contractor-operated facilities engaged in USPS mail operations; the American National Red Cross; private sector maritime activities; employment on Indian reservations; enforcement relating to any contractors or subcontractors on any Federal establishment where the land has been ceded to the Federal Government; railroad employment; and enforcement on military bases.

(c) North Carolina is required to maintain a State program which is at least as effective as operations under the Federal program; to submit plan supplements in accordance with 29 CFR part 1953; to allocate sufficient safety and health enforcement staff to meet the benchmarks for State staffing established by the U.S. Department of Labor, or any revisions to those benchmarks; and, to furnish such reports in such form as the Assistant Secretary may from time to time require.

[61 FR 66601, Dec. 18, 1996, as amended at 65 FR 36621, June 9, 2000; 65 FR 62612, Oct. 19, 2000]

§ 1952.155 Level of Federal enforcement.

(a) As a result of the Assistant Secretary's determination granting final approval to the North Carolina State plan under section 18(e) of the Act, effective December 10, 1996, occupational safety and health standards which have been promulgated under section 6 of the Act do not apply with respect to issues covered under the North Carolina Plan. This determination also relinquishes concurrent Federal OSHA authority to issue citations for violations of such standards under sections 5(a)(2) and 9 of the Act; to conduct inspections and investigations under section 8 (except those necessary to conduct evaluation of the plan under section 18(f) and other inspections, investigations, or proceedings necessary to carry out Federal responsibilities not specifically preempted by section 18(e)); to conduct enforcement proceedings in contested cases under section 10; to institute proceedings to correct imminent dangers under section 13; and to propose civil penalties or initiate criminal proceedings for violations of the Federal OSH Act under section 17. The Assistant Secretary retains jurisdiction under the above provisions in any proceeding commenced under section 9 or 10 before the effective date of the 18(e) determination.

(b)(1) In accordance with section 18(e), final approval relinquishes Federal OSHA authority only with regard to occupational safety and health issues covered by the North Carolina plan. OSHA retains full authority over issues which are not subject to State enforcement under the plan. Thus, Federal OSHA retains its authority relative to safety and health in private sector maritime activities and will continue to enforce all provisions of the Act, rules or orders, and all Federal standards, current or future, specifically directed to private sector maritime activities (occupational safety and health standards comparable to 29 CFR Parts 1915, shipyard employment; 1917, marine terminals; 1918, longshoring; and 1919; gear certification, as well as provisions of general industry and construction standards (29 CFR Parts 1910 and 1926) appropriate to hazards found in these employments); employment on Indian reservations; enforcement relating to any contractors or subcontractors on any Federal establishment where the land has been ceded to the Federal Government; railroad employment, not otherwise regulated by another Federal agency; and enforcement on military bases. Federal

jurisdiction is also retained with respect to Federal government employers and employees; the U.S. Postal Service (USPS), including USPS employees, and contract employees and contractor-operated facilities engaged in USPS mail operations; and the American National Red Cross.

(2) In addition, any hazard, industry, geographical area, operation or facility over which the State is unable to effectively exercise jurisdiction for reasons which OSHA determines are not related to the required performance or structure of the plan shall be deemed to be an issue not covered by the State plan which has received final approval, and shall be subject to Federal enforcement. Where enforcement jurisdiction is shared between Federal and State authorities for a particular area, project, or facility, in the interest of administrative practicability Federal jurisdiction may be assumed over the entire project or facility. In any of the aforementioned circumstances, Federal enforcement authority may be exercised after consultation with the State designated agency.

(c) Federal authority under provisions of the Act not listed in section 18(e) is unaffected by final approval of the North Carolina State plan. Thus, for example, the Assistant Secretary retains his authority under section 11(c) of the Act with regard to complaints alleging discrimination against employees because of the exercise of any right afforded to the employee by the Act, although such complaints may be referred to the State for investigation. The Assistant Secretary also retains his authority under section 6 of the Act to promulgate, modify or revoke occupational safety and health standards which address the working conditions of all employees, including those in States which have received an affirmative 18(e) determination, although such standards may not be Federally applied. In the event that the State's 18(e) status is subsequently withdrawn and Federal authority reinstated, all Federal standards, including any standards promulgated or modified during the 18(e) period, would be Federally enforceable in that State.

(d) As required by section 18(f) of the Act, OSHA will continue to monitor the operations of the North Carolina State program to assure that the provisions of the State plan are substantially complied with and that the program remains at least as effective as the Federal program. Failure by the State to comply with its obligations may result in the revocation of the final approval determination under section 18(e), resumption of Federal enforcement, and/or proceedings for withdrawal of plan approval.

[61 FR 66601, Dec. 18, 1996, as amended at 65 FR 36621, June 9, 2000; 65 FR 62612, Oct. 19, 2000]

§ 1952.156 Where the plan may be inspected.

A copy of the principal documents comprising the plan may be inspected and copied during normal business hours at the following locations:

Office of State Programs, Occupational Safety and Health Administration, U.S. Department of Labor, 200 Constitution Avenue NW, Room N3700, Washington, DC 20210;

Office of the Regional Administrator, Occupational Safety and Health Administration, U.S. Department of Labor, Atlanta Federal Center, 61 Forsyth Street, SW, Room 6T50, Atlanta, Georgia 30303; and

Office of the Commissioner, North Carolina Department of Labor, 4 West Edenton Street, Raleigh, North Carolina 27601–1092.

[65 FR 36621, June 9, 2000]

§ 1952.157 Changes to approved plan.

(a) *Legislation.* (1) On March 29, 1994, the Assistant Secretary approved North Carolina's revised statutory penalty levels which are the same as the revised Federal penalty levels contained in section 17 of the Act as amended on November 5, 1990.

(2) [Reserved]

(b) *The Voluntary Protection Program.* On June 24, 1994, the Assistant Secretary approved North Carolina's plan supplement, which is generally identical to the Federal STAR Voluntary Protection Program. North Carolina's ''Carolina'' VVP is limited to the STAR Program, and excludes the MERIT and DEMONSTRATION Programs. Also, injury rates must be at or

below 50 percent of the State injury average rather than the National injury average.

[59 FR 39257, Aug. 2, 1994]

Subpart J—Iowa

§ 1952.160 Description of the plan as initially approved.

(a)(1) The plan identifies the Bureau of Labor as the State agency designated to administer the plan throughout the State. Its responsibilities include both occupational safety and occupational health, the latter on a developmental basis. The plan defines the covered occupational safety and health issues as defined by the Secretary of Labor in 29 CFR 1902.2(c)(i). Under existing occupational safety and health legislation, effective July 1, 1972, Iowa has adopted as interim standards all the occupational safety and health standards and amendments thereto which had been promulgated by the Secretary of Labor, except those found in 29 CFR parts 1915, 1916, 1917 and 1918 (Ship repairing, ship building, ship breaking and longshoring). Hearings have been held on the adoption, as permanent standards, of the standards in 29 CFR parts 1910 and 1926. Under its existing legislation, the Bureau of Labor has exercised statewide inspection authority to enforce State standards which are identical to Federal standards. The legislation covers all employers including the State and its political subdivisions and gives the Iowa Bureau of Labor full authority to administer and enforce all laws, rules, and orders protecting employee safety and health in all places of employment in the State.

(2) The legislation contains procedures for the promulgation of standards, including standards for the prompt protection of employees against new and unforeseen hazards; furnishing information to employees on hazards, precautions, symptoms, and emergency treatment; procedures for granting temporary and permanent variances; and for the protection of employees from hazards. The law provides for inspections including inspections in response to complaints; ensures employer and employee representatives an opportunity to accompany inspectors and call attention to possible violations before, during and after inspections; protection of employees against discharge or discrimination in terms or conditions of employment through court suits brought by the Bureau of Labor; notice to employees of their protections and obligations under the State law; imminent danger abatement through court injunctions; safeguards to protect trade secrets; prompt notice to employers and employees of alleged violations of standards and abatement requirements; effective sanctions against employers; employer right to review of alleged violations, abatement periods, and proposed penalties with an opportunity for employee participation as parties; and employee review of any citation issued to the employee, in review proceedings before the independent Review Commission.

(3) The plan is developmental in the establishment of a compliance program for agriculture, mercantile and service employees; development of an occupational health program; developing a management information system; and hiring and training of staff under the existing State merit system.

(b) Included in the plan is a statement of the Governor's support for the plan and a statement of legal opinion that the legislation will meet the requirements of the Occupational Safety and Health Act of 1970 and is consistent with the Constitution and laws of Iowa. The plan sets out goals and provides a timetable for bringing it into full conformity with part 1902 at the end of three years after the commencement of operations under the plan.

(c) The plan includes the following documents as of the date of approval:

(1) The plan document with appendices;

(2) Letters from Jerry L. Addy, Commissioner of Labor, dated January 2, 1973, and March 21, 1973, with clarifications and modifications of the plan;

(3) Iowa has also submitted the following regulations adopted by the State:

(i) Chapter 3 of the Iowa Bureau of Labor Administrative Rules dealing with inspections, citations, and proposed penalties, adopted July 25, 1972;

(ii) Chapter 4 of the Iowa Bureau of Labor Administrative Rules dealing

with recording and reporting occupational injuries and illnesses adopted July 11, 1973, and amended July 25, 1972;

(iii) Chapter 5 of the Iowa Bureau of Labor Administrative Rules dealing with rules of practice for variances, limitations, variations, tolerances, and exemptions adopted July 25, 1972, and amended October 5, 1972.

These adopted rules and regulations which were not part of the plan as originally submitted will be evaluated in accordance with the review of completions of developmental steps in State plans.

[37 FR 19370, July 20, 1973, as amended at 50 FR 27243, July 2, 1985]

§ 1952.161 Developmental schedule.

The Iowa State plan is developmental. The following is the developmental schedule as amended and provided by the plan:

(a) Enabling legislation becomes effective (Chapter 88 of Iowa Code)—July 1972.

(b) Corrective amendments to Chapter 88 of Iowa Code become effective—July 1975.

(c) Adoption of Federal Standards as interim State standards—July 1972.

(d) Promulgation of Federal Standards as permanent State standards—July 1973.

(e) Development of training program for employers and employees—October 1974.

(f) Complete hiring of additional staff—April 1975.

(g) Basic training of staff—May 1975.

(h) Development of approved Manual MIS—July 1972.

(i) Commencement of compliance activities—July 1972.

(j) Development of compliance programs in Agriculture, Mercantile, and Services—August 1975.

(k) Development of on-site consultation program—September 1975.

(l) Development of State poster—August 1975.

[41 FR 18836, May 7, 1976. Redesignated at 50 FR 27243, July 2, 1985]

§ 1952.162 Completion of developmental steps and certification.

(a) In accordance with the requirements of § 1952.10, the Iowa State poster was approved by the Assistant Secretary on August 26, 1975.

(b) In accordance with the requirements of § 1952.163(b), the Iowa Occupational Safety and Health Act of 1972 (Iowa S.F. 1218—Chapter 88) is amended by Iowa Act S.F. 92, with an effective date of July 1, 1975.

(c) In accordance with the commitment contained in § 1952.163(a), the State of Iowa enacted occupational safety and health enabling legislation which became effective on July 1, 1972.

(d) In accordance with the commitment contained in § 1952.163(f), the State of Iowa, as of April 24, 1974, hired a sufficient number of qualified safety and health personnel under the approved Iowa Merit Employment Department system.

(e) In accordance with the commitment contained in § 1952.163(g), all basic training of Iowa compliance personnel was completed as of May 9, 1975.

(f) In accordance with the commitment contained in § 1952.163(e), a program of education and training of employers and employees was developed with local community colleges as of October 1974.

(g) In accordance with the commitment contained in § 1952.163(h), the Iowa Bureau of Labor developed an approved manual Management Information System as of July 1972.

(h) In accordance with the commitment contained in § 1952.163(k), the Iowa Bureau of Labor initiated an approved program of on-site consultation as of September 1975.

(i) In accordance with the commitment contained in § 1952.163(c), the State of Iowa adopted Federal standards as interim State standards under chapter 88 of the Iowa Code, effective on July 1, 1972.

(j) In accordance with the commitment contained in § 1952.163(d), the State of Iowa promulgated Federal occupational safety and health standards (29 CFR parts 1910 and 1926) as permanent State Standards as of August 16, 1973.

(k) In accordance with the commitment contained in § 1952.163(i), the Iowa Bureau of Labor began its compliance activities in July 1973.

(l) In accordance with the commitment contained in § 1952.163(j), the Iowa

Bureau of Labor implemented compliance programs in the agriculture, mercantile, and service issues by July 1975.

(m) In accordance with §1902.34 of this chapter, the Iowa safety and health plan program was certified on September 14, 1976 as having completed all developmental steps in its plan with regard to those occupational safety and health issues specified in the plan on or before July 20, 1976.

(n) Amendment to Chapter 4, Recording and Reporting Occupational Injuries and Illnesses. Clarifications of the Iowa recordkeeping and reporting rules.

(o) Amendment to Chapter 6, IOSH Consultative Services and Training. Detailed procedures for safety consultants when they find a serious or imminent danger hazard.

(p) Modifications to the Iowa Plan. Minor revisions to the Iowa plan dealing with present staffing, position statements, legislative changes, and current responsibilities of divisions in the Iowa Bureau of Labor.

[40 FR 40157, Sept. 2, 1975, as amended at 41 FR 23671, June 11, 1976; 41 FR 39028, Sept. 14, 1976; 44 FR 11067, Feb. 27, 1979. Redesignated and amended at 50 FR 27243, July 2, 1985]

§1952.163 Compliance staffing benchmarks.

Under the terms of the 1978 Court Order in *AFL-CIO* v. *Marshall*, compliance staffing levels (benchmarks) necessary for a ''fully effective'' enforcement program were required to be established for each State operating an approved State plan. In September 1984, Iowa, in conjunction with OSHA, completed a reassessment of the levels initially established in 1980 and proposed revised compliance staffing benchmarks of 16 safety and 13 health compliance officers. After opportunity for public comment and service on the AFL-CIO, the Assistant Secretary approved these revised staffing requirements effective July 2, 1985.

[50 FR 27243, July 2, 1985]

§1952.164 Final approval determination.

(a) In accordance with section 18(e) of the Act and procedures in 29 CFR part 1902, and after determination that the State met the ''fully effective'' compliance staffing benchmarks as revised in 1984 in response to a Court Order in *AFL-CIO* v. *Marshall* (CA 74–406), and was satisfactorily providing reports to OSHA through participation in the Federal-State Unified Management Information System, the Assistant Secretary evaluated actual operations under the Iowa State plan for a period of at least one year following certification of completion of developmental steps (41 FR 39027). Based on the 18(e) Evaluation Report for the period of October 1982 through March 1984, and after opportunity for public comment, the Assistant Secretary determined that in operation, the State of Iowa occupational safety and health program is at least as effective as the Federal program in providing safe and healthful employment and places of employment and meets the criteria for final State plan approval in section 18(e) of the Act and implementing regulations at 29 CFR part 1902. Accordingly, the Iowa plan was granted final approval and concurrent Federal enforcement authority was relinquished under section 18(e) of the Act effective July 2, 1985.

(b) Except as otherwise noted, the plan which has received final approval covers all activities of employers and all places of employment in Iowa. The plan does not cover private sector maritime employment; Federal government-owned, contractor-operated military/munitions facilities; Federal government employers and employees; the U.S. Postal Service (USPS), including USPS employees, and contract employees and contractor-operated facilities engaged in USPS mail operations; bridge construction projects spanning the Mississippi and Missouri Rivers between Iowa and other States; the enforcement of the field sanitation standard, 29 CFR 1928.110, and the enforcement of the temporary labor camps standard, 29 CFR 1910.142, with respect to any agricultural establishment where employees are engaged in ''agricultural employment'' within the meaning of the Migrant and Seasonal Agricultural Worker Protection Act, 29 U.S.C. 1802(3), regardless of the number of employees, including employees engaged in hand packing of produce into containers, whether done on the

ground, on a moving machine, or in a temporary packing shed, except that Iowa retains enforcement responsibility over agricultural temporary labor camps for employees engaged in egg, poultry, or red meat production, or the post-harvest processing of agricultural or horticultural commodities.

(c) Iowa is required to maintain a State program which is at least as effective as operations under the Federal program; to submit plan supplements in accordance with 29 CFR part 1953; to allocate sufficient safety and health enforcement staff to meet the benchmarks for State staffing established by the U.S. Department of Labor, or any revisions to those benchmarks; and, to furnish such reports in such form as the Assistant Secretary may from time to time require.

[50 FR 27243, July 2, 1985, as amended at 62 FR 2561, Jan. 17, 1997; 65 FR 36622, June 9, 2000]

§ 1952.165 Level of Federal enforcement.

(a) As a result of the Assistant Secretary's determination granting final approval of the Iowa plan under section 18(e) of the Act, effective July 2, 1985, occupational safety and health standards which have been promulgated under section 6 of the Act do not apply with respect to issues covered under the Iowa plan. This determination also relinquishes concurrent Federal OSHA authority to issue citations for violations of such standards under section 5(a)(2) and 9 of the Act; to conduct inspections and investigations under section 8 (except those necessary to conduct evaluation of the plan under section 18(f) and other inspections, investigations, or proceedings necessary to carry out Federal responsibilities not specifically preempted by section 18(e)); to conduct enforcement proceedings in contested cases under section 10; to institute proceedings to correct imminent dangers under section 13; and to propose civil penalties or initiate criminal proceedings for violations of the Federal Act under section 17. The Assistant Secretary retains jurisdiction under the above provisions in any proceeding commenced under section 9 or 10 before the effective date of the 18(e) determination.

(b)(1) In accordance with section 18(e), final approval relinquishes Federal OSHA authority only with regard to occupational safety and health issues covered by the Iowa plan. OSHA retains full authority over issues which are not subject to State enforcement under the plan. Thus, Federal OSHA retains its authority relative to safety and health in private sector maritime activities and will continue to enforce all provisions of the Act, rules or orders, and all Federal standards, current or future, specifically directed to maritime employment (29 CFR Part 1915, shipyard employment; Part 1917, marine terminals; Part 1918, longshoring; Part 1919, gear certification), as well as provisions of general industry and construction standards (29 CFR Parts 1910 and 1926) appropriate to hazards found in these employments; Federal government-owned, contractor-operated military/munitions facilities; bridge construction projects spanning the Mississippi and Missouri Rivers between Iowa and other States. Federal jurisdiction is retained and exercised by the Employment Standards Administration, U.S. Department of Labor, (Secretary's Order 5–96, dated December 27, 1996) with respect to the field sanitation standard, 29 CFR 1928.110, and the enforcement of the temporary labor camps standard, 29 CFR 1910.142, in agriculture, as described in § 1952.164(b). Federal OSHA will also retain authority for coverage of all Federal government employers and employees; and of the U.S. Postal Service (USPS), including USPS employees, and contract employees and contractor-operated facilities engaged in USPS mail operations.

(2) In addition, any hazard, industry, geographical area, operation or facility over which the State is unable to effectively exercise jurisdiction for reasons not related to the required performance or structure of the plan shall be deemed to be an issue not covered by the finally approved plan, and shall be subject to Federal enforcement. Where enforcement jurisdiction is shared between Federal and State authorities for a particular area, project, or facility, in the interest of administrative practicability, Federal jurisdiction may be assumed over the entire project

or facility. In either of the two aforementioned circumstances, Federal enforcement may be exercised immediately upon agreement between Federal and State OSHA.

(c) Federal authority under provisions of the Act not listed in section 18(e) is unaffected by final approval of the plan. Thus, for example, the Assistant Secretary retains his authority under section 11(c) of the Act with regard to complaints alleging discrimination against employees because of the exercise of any right afforded to the employee by the Act, although such complaints may be referred to the State for investigation. The Assistant Secretary also retains his authority under section 6 of the Act to promulgate, modify or revoke occupational safety and health standards which address the working conditions of all employees, including those in States which have received an affirmative 18(e) determination, although such standards may not be Federally applied. In the event that the State's 18(e) status is subsequently withdrawn and Federal authority reinstated, all Federal standards, including any standards promulgated or modified during the 18(e) period, would be federally enforceable in that State.

(d) As required by section 18(f) of the Act, OSHA will continue to monitor the operations of the Iowa State program to assure that the provisions of the State plan are substantially complied with and that the program remains at least as effective as the Federal program. Failure by the State to comply with its obligations may result in the revocation of the final determination under section 18(e), resumption of Federal enforcement, and/or proceedings for withdrawal of plan approval.

[50 FR 27243, July 2, 1985, as amended at 62 FR 2561, Jan. 17, 1997; 65 FR 36622, June 9, 2000]

§ 1952.166 Where the plan may be inspected.

A copy of the principal documents comprising the plan may be inspected and copied during normal business hours at the following locations:

Office of State Programs, Occupational Safety and Health Administration, U.S. Department of Labor, 200 Constitution Avenue NW, Room N3700, Washington, DC 20210;

Office of the Regional Administrator, Occupational Safety and Health Administration, U.S. Department of Labor, City Center Square, 1100 Main Street, Suite 800, Kansas City, Missouri 64105; and

Office of the Commissioner, Iowa Division of Labor , 1000 E. Grand Avenue, Des Moines, Iowa 50319.

[65 FR 36622, June 9, 2000]

§ 1952.167 Changes to approved plans.

(a) *Legislation*. (1) On March 29, 1994, the Assistant Secretary approved Iowa's revised statutory penalty levels which are the same as the revised Federal penalty levels contained in section 17 of the Act as amended on November 5, 1990.

(2) [Reserved]

(b) *Temporary labor camps/field sanitation*. Effective February 3, 1997, the Assistant Secretary approved Iowa's plan amendment, dated August 2, 1996, relinquishing coverage for the issues of field sanitation (29 CFR 1928.110) and temporary labor camps (29 CFR 1910.142) in agriculture (except for agricultural temporary labor camps associated with egg, poultry or red meat production, or the post-harvest processing of agricultural or horticultural commodities). The Employment Standards Administration, U.S. Department of Labor, has assumed responsibility for enforcement of these Federal OSHA standards in agriculture in Iowa pursuant to Secretary of Labor's Order 5–96, dated December 27, 1996.

[59 FR 14555, Mar. 29, 1994, as amended at 62 FR 2561, Jan. 17, 1997]

Subpart K—California

§ 1952.170 Description of the plan.

(a) The State's program will be enforced by the Division of Industrial Safety of the Department of Industrial Relations of the California Agriculture and Services Agency. Current safety and health standards will be continued unless amended by a State occupational safety and health standards board to be created. This board will take the amending action necessary to assure that State standards are as effective as those established under the

Federal program. Appeals from the granting or denial of requests for variances will also come within the jurisdiction of this board. Administrative adjudications will be the responsibility of the California Occupational Safety and Health Appeals Board.

(b) The State program is expected to extend its protection to all employees in the State (including those employed by it and its political subdivisions) except those employed by Federal agencies, certain maritime workers, household domestic service workers, and railroad workers not employed in railroad shops. (It is assumed that activities excluded from the Occupational Safety and Health Act's jurisdiction by section 4(b)(1) (29 U.S.C. 653(b)(1)) will also be excluded from the State's jurisdiction under this plan.)

(c) The plan includes procedures for providing prompt and effective standards for the protection of employees against new and unforeseen hazards and for furnishing information to employees on hazards, precautions, symptoms, and emergency treatment; and procedures for variances and the protection of employee from hazards. It provides employer and employee representatives an opportunity to accompany inspectors and call attention to possible violations before, during, and after inspections, protection of employees against discharge or discrimination in terms and conditions of employment, notice to employees or their representatives when no compliance action is taken upon complaints, including informal review, notice to employees of their protections and obligations, adequate safeguards to protect trade secrets, prompt notice to employers and employees of alleged violations of standards and abatement requirements, effective remedies against employers, and the right to review alleged violations, abatement periods, and proposed penalties with opportunity for employee participation in the review proceedings; procedures for prompt restraint or elimination of imminent danger conditions, and procedures for inspection in response to complaints.

(d) Based on an analysis of California's standards comparison, the State's standards corresponding to subparts F and K of this part, and § 1910.263 of this (chapter) in subpart R of this part, of the OSHA standards have been determined to be at least as effective. These State standards contain no product standards corresponding to subpart F State's developmental schedule provides that the remaining subparts will be covered by corresponding State standards which are at least as effective within 1 year of plan approval.

(e) The plan includes a statement of the Governor's support for the proposed legislation and a statement of legal opinion that it will meet the requirements of the Occupational Safety and Health Act of 1970, and is consistent with the constitution and laws of California. The plan sets out goals and provides a timetable for bringing it into full conformity with part 1902 of this chapter upon enactment of the proposed legislation by the State legislature. A merit system of personnel administration will be used. In addition, efforts to achieve voluntary compliance by employers and employees will include both on- and off-site consultations. The plan is supplemented by letters dated March 21, 1973, and April 10, 1973, from A. J. Reis, Assistant Secretary for Occupational Safety and Health of the Agriculture and Service Agency of the State of California.

[38 FR 10719, May 1, 1973]

§ 1952.171 Where the plan may be inspected.

A copy of the principal documents comprising the plan may be inspected and copied during normal business hours at the following locations:

Office of State Programs, Occupational Safety and Health Administration, U.S. Department of Labor, 200 Constitution Avenue NW, Room N3700, Washington, DC 20210;

Office of the Regional Administrator, Occupational Safety and Health Administration, U.S. Department of Labor, 71 Stevenson Street, 4th Floor, San Francisco, California 94105; and

Office of the Director, California Department of Industrial Relations, 455 Golden Gate Avenue, 10th Floor, San Francisco 94102.

[65 FR 36622, June 9, 2000]

§ 1952.172 Level of Federal enforcement.

(a) Pursuant to §§ 1902.20(b)(1)(iii) and 1952.3 of this chapter, under which a revised agreement has been entered into between Frank Strasheim, OSHA Regional Administrator, and Ron Rinaldi, Director, California Department of Industrial Relations, effective October 5, 1989, and based on a determination that California is operational in the issues covered by the California occupational safety and health plan, discretionary Federal enforcement authority under section 18(e) of the Act (29 U.S.C. 667(e)) will not be initiated with regard to Federal occupational safety and health standards in issues covered under 29 CFR part 1910, 29 CFR part 1926, and 29 CFR part 1928, except as set forth below.

(b) The U.S. Department of Labor will continue to exercise authority, among other things, with regard to:

(1) Specific Federal standards which the State has not yet adopted or with respect to which the State has not amended its existing State standards when the Federal standard provides a significantly greater level of worker protection than the corresponding Cal/OSHA standard, enforcement of new permanent and temporary emergency Federal standards until such time as the State shall have adopted equivalent standards, and enforcement of unique and complex standards as determined by the Assistant Secretary.

(2) The following maritime activities:

(i) Longshore operations on vessels from the shore side of the means of access to said vehicles.

(ii) Marine vessels construction operations (from the means of access of the shore).

(iii) All afloat marine ship building and repair from the foot of the gangway.

(iv) All ship building and repair in graving docks or dry docks.

(v) All ship repairing done in marine railways or similar conveyances used to haul vessels out of the water.

(vi) All floating fuel operations.

(vii) All afloat dredging and pile driving and similar operations.

(viii) All diving from vessels afloat on the navigable waters.

(ix) All off-shore drilling rigs operating outside the 3-mile limit.

(3) Any hazard, industry, geographical area, operation or facility over which the State is unable to exercise jurisdiction fully or effectively.

(4) Private contractors on Federal installations where the Federal agency claims exclusive Federal jurisdiction, challenges State jurisdiction and/or refuses entry to the State; such Federal enforcement will continue at least until the jurisdictional question is resolved at the National level between OSHA and the cognizant Federal agency.

(5) Complaints filed with Federal OSHA alleging discrimination under section 11(c) of the OSH Act.

(6) Completion of Federal enforcement actions initiated prior to the effective date of the agreement.

(7) Situations where the State is refused entry and is unable to obtain a warrant or enforce the right of entry.

(8) Enforcement in situations where the State temporarily is unable to exercise its enforcement authority fully or effectively.

(9) Federal government employers and employees; and the U.S. Postal Service (USPS), including USPS employees, and contract employees and contractor-operated facilities engaged in USPS mail operations.

(c) As required by section 18(f) of the Act, OSHA will continue to monitor the operations of the California State program to assure that the provisions of the State plan are substantially complied with and that the program remains at least as effective as the Federal program. The Regional Administrator for Occupational Safety and Health will make a prompt recommendation for the resumption of the exercise of Federal enforcement authority under section 18(e) of the Act (29 U.S.C. 667(e)) whenever, and to the degree, necessary to assure occupational safety and health protection to employees in California.

[55 FR 28613, July 12, 1990, as amended at 65 FR 36622, June 9, 2000]

§ 1952.173 Developmental schedule.

(a) Within 1 year following plan approval, legislation will be enacted authorizing complete implementation of

the plan and enforcement rules and regulations will be promulgated, and an operations manual be completed.

(b) By October 31, 1975, present standards will be amended or new standards promulgated which are as effective and comprehensive as those set forth in chapter XVII of this title 29 of the Code of Federal Regulations;

(c) An exception to paragraphs (a) and (b) of this section exists relative to radiation machines and other non-Atomic Energy Act sources of radiation. The standards and enforcement program in this area will be developed within 2 years of plan approval.

(d) Inter-agency agreements to provide technical support to the program will be fully functioning within 1 year of plan approval.

(e) Inservice training plans for enforcement personnel will be developed within 18 months of plan approval.

(f) A program of consultation with employers and employees will be functioning within 6 months of plan approval.

(g) Within 3 years of plan approval all developmental steps will be fully implemented.

(h) The Inspection Scheduling System will be fully implemented and in operation March 31, 1975.

[38 FR 10719, May 1, 1973, as amended at 40 FR 18429, Apr. 28, 1975; 40 FR 40156, Sept. 2, 1975]

§ 1952.174 Completion of developmental steps and certification.

(a)(1) In accordance with § 1952.173(a), The California Occupational Safety and Health Act (Assembly Bill No. 150) was enacted in September 1973 and filed with the California Secretary of State October 2, 1973.

(2) The following difference between the program described in § 1952.170(a) and the program authorized by the State law is approved: Authority to grant or deny temporary variances rests with the Division of Industrial Safety, and such authority for permanent variances is with the Occupational Safety and Health Standards Board. The Board hears appeals from the Division of Industrial Safety's decisions on temporary variances.

(b) In accordance with § 1952.173(d) formal interagency agreements were negotiated and signed between the Department of Industrial Relations and the State Department of Health (June 28, 1973) and between the State Department of Industrial Relations and the State Fire Marshal (August 14, 1973).

(c) In accordance with § 1952.173(f), a program of consultation with employers and employees was fully functioning in January 1974.

(d) In accordance with the requirements of § 1952.10, the California State poster was approved by the Assistant Secretary on August 27, 1975.

(e) The Occupational Safety and Health Standards Board began functioning in January 1974.

(f) The initial major training and education of employers, employees and the general public was completed by 1974.

(g) In accordance with § 1952.173(a), recordkeeping and reporting requirements were extended to State and local governments effective January 1, 1975.

(h) The Management Information System was established by November 1974.

(i) The Occupational Safety and Health Appeals Board began functioning in early 1974. The Rules of Procedure for the Board were approved by the Assistant Secretary on November 19, 1975.

(j) In accordance with § 1952.173(a), enforcement rules and regulations were promulgated by January 1974, and were approved by the Assistant Secretary on September 28, 1976.

(k) Recordkeeping and reporting requirements for private employers were promulgated by November 1974, and were approved by the Assistant Secretary on September 28, 1976.

(l) In accordance with § 1952.173(h), the Inspection Scheduling System was fully implemented and in operation by June 1975.

(m) In accordance with § 1952.173(a), an operations manual was published, and was approved by the Assistant Secretary on September 28, 1976.

(n) In accordance with § 1952.173(e), in-service training Programs for safety and health enforcement personnel were implemented within 18 months of plan approval.

(o) Enforcement of standards pertaining to temporary labor camps was implemented in March 1977.

(p) In accordance with § 1903.34 of this chapter, the California occupational safety and health plan was certified, effective August 12, 1977, as having completed all developmental steps specified in the plan as approved on April 24, 1973, on or before June 1, 1976, with the exception that temporary labor camp standards development and enforcement program was completed on March 11, 1977.

[40 FR 18427, Apr. 28, 1975, as amended at 40 FR 40156, Sept. 2, 1975; 40 FR 54426, Nov. 24, 1975; 41 FR 43405, Oct. 1, 1976; 41 FR 51013, Nov. 19, 1976; 42 FR 37549, July 22, 1977; 42 FR 41858, Aug. 19, 1977]

§ 1952.175 Changes to approved plans.

(a) In accordance with part 1953 of this chapter, the California carcinogen program implemented on January 1, 1977, was approved by the Assistant Secretary on March 6, 1978.

(b) On January 1, 1978, the California Department of Industrial Relations became the agency designated to administer the California Occupational Safety and Health Plan.

(c) In accordance with part 1953 of this chapter, California amended its employer recordkeeping and reporting requirements effective November 4, 1978, so as to provide employee access to the employer's log and summary of occupational injuries and illnesses.

(d) In accordance with part 1953 of this chapter, California's liaison with the Occupational Health Centers, implemented on April 25, 1979, was approved by the Assistant Secretary on July 25, 1980.

(e) In accordance with part 1953 of this chapter, the California Hazard Alert System, implemented in July 1979, was approved by the Assistant Secretary on July 25, 1980.

(f) In accordance with part 1953 of this chapter, the revised stratification of the Safety Engineer Series, adopted by California on July 1, 1979, was approved by the Assistant Secretary on January 12, 1981.

(g) In accordance with part 1953 of this chapter, California's Small Employer Voluntary Compliance Program, implemented on March 1, 1981, was approved by the Assistant Secretary on August 2, 1983.

(h) In accordance with part 1953 of this chapter, the California Cooperative Self-Inspection Program was approved by the Assistant Secretary on August 1, 1986.

(i) *Legislation*. (1) On March 29, 1994, the Assistant Secretary approved California's revised statutory penalty levels which are the same as the revised Federal penalty levels contained in section 17 of the Act as amended on November 5, 1990.

[43 FR 9807, Mar. 10, 1978, as amended at 44 FR 36385, June 22, 1979; 45 FR 8594, Feb. 8, 1980; 45 FR 51766, Aug. 5, 1980; 46 FR 3861, Jan. 16, 1981; 48 FR 34951, Aug. 2, 1983; 51 FR 27535, Aug. 1, 1986; 59 FR 14556, Mar. 29, 1994; 67 FR 60129, Sept. 25, 2002]

Subparts L–M [Reserved]

Subpart N—Minnesota

§ 1952.200 Description of the plan as initially approved.

(a) The Department of Labor and Industry is the State agency designated by the Governor to administer the plan throughout the State. The plan defines the covered occupational safety and health issues as defined by the Secretary of Labor in 29 CFR 1902.2(c)(1). The commissioner of the Department of Labor and Industry adopted Federal standards promulgated as of October 1972, effective in Minnesota, February 1973. The commissioner will continue to adopt Federal standards and will retain those Minnesota standards not covered by Federal standards. The plan contains a list of the Federal standards adopted and the State standards that will be retained. These standards will be enforced according to current legislative authority in Minnesota prior to the effective date of Minnesota's enabling legislation submitted as part of the plan.

(b)(1) The plan includes legislation enacted by the Minnesota legislature during its 1973 session. Under the legislation the Department of Labor and Industry will have full authority to enforce and administer laws respecting safety and health of employees in all

workplaces of the State, including coverage of public employees, with the exception of maritime workers in the areas of exclusive Federal jurisdiction, employees of the United States, and employees whose working conditions are regulated by Federal agencies other than the U.S. Department of Labor under the provisions of section 4(b)(1) of the Occupational Safety and Health Act of 1970.

(2) The legislation further proposed to bring the plan into conformity with the requirements of 29 CFR part 1902 in areas such as procedures for granting or denying temporary and permanent variances by the commissioner; protection of employees from hazards; procedures for the development and promulgation of standards by the commissioner, including emergency temporary standards; and procedures for prompt restraint or elimination of imminent danger situations by issuance of a ''red-tag'' order effective for 3 days as well as by court injunction.

(3) The legislation is also intended to insure inspections in response to complaints; give employer and employee representatives an opportunity to accompany inspectors in order to aid inspections and that loss of any privilege or payment to an employee as a result of aiding such inspection would constitute discrimination; notification of employees or their representatives where no compliance action is taken as a result of alleged violations, including informal review; notification of employees of their protections and obligations; protection of employees against discharge or discrimination in terms and conditions of employment by filing complaints with the commissioner and hearings by the review commission; adequate safeguards to protect trade secrets; provision for prompt notice to employers and employees of alleged violations of standards and abatement requirements through the issuance and posting of citations; a system of sanctions against employers for violation of standards; employer right of review and employee participation in review proceedings, before an independent review commission; and coverage of employees of the State and political subdivisions in the same manner as private employees.

(c) Included in the plan is a statement of the Governor's support for the legislation and a statement of legal opinion that it will meet the requirements of the Occupational Safety and Health Act of 1970 and is consistent with the constitution and laws of Minnesota. The plan sets out goals and provides a timetable for bringing it into full conformity with part 1902 at the end of 3 years after commencement of operations under the plan. Personnel will be employed under the existing State merit system and the voluntary compliance program for onsite consultation for private and public employers meets the conditions set forth in the issues discussed in the Washington decision (38 FR 2421, January 26, 1973).

(d) The plan includes the following documents as of the date of approval:

(1) The plan document and appendices;

(2) Revised legislation, submitted January 25, 1973;

(3) Compliance manual and supplements to the plan document, February 15, 1973;

(4) Letters from the Department of Labor and Industry dated February 8, 1973, and April 9, 1973.

[38 FR 15077, June 8, 1973, as amended at 50 FR 30831, July 30, 1985]

§ 1952.201 Developmental schedule.

(a) Retraining of present occupational safety and health personnel during March-May 1973;

(b) Training sessions for public employers and employees during April-June 1973;

(c) Effective date of legislation, August 1, 1973;

(d) Regulations on variances, August 1973;

(e) Management information system, August 1973;

(f) Staff increases in Department of Labor and Industry and Department of Health 1973–74;

(g) Voluntary compliance program implemented by January 1975;

(h) Coverage and enforcement of standards regarding agriculture, July 1975.

[38 FR 15077, June 8, 1973. Redesignated at 50 FR 30831, July 30, 1985]

§ 1952.202 Completion of developmental steps and certification.

(a) In accordance with the requirements of § 1952.10, the Minnesota State poster was approved by the Assistant Secretary on March 7, 1975.

(b) In accordance with § 1952.203(g), the Minnesota voluntary compliance program became effective on January 1, 1975, and was approved by the Assistant Secretary on April 24, 1975.

(c) State occupational safety and health personnel were retrained during March-May 1973.

(d) Training sessions for public employers and employees were held during April-June 1973.

(e) The Minnesota enabling legislation became effective on August 1, 1973. In addition, amendments to the legislation which concerned employee discrimination complaints and violations became effective on July 1, 1975, and a second amendment concerning the definition of a serious violation, posting of citations and penalties, right of employees to contest a citation and penalty, and furnishing copies of citations and notices of penalties to employer representatives and, in the case of a fatality, to the next of kin or a designated representative, became effective on August 1, 1975.

(f) Regulations on variances were promulgated on February 20, 1974, and were approved with assurances by the Assistant Secretary on August 31, 1976.

(g) The management information system became operable in August 1973.

(h) Coverage and enforcement of agricultural standards commenced on July 1, 1975.

(i) The Rules of Procedure of the Minnesota Occupational Safety and Health Review Commission, chapter 20, Minnesota Occupational Safety and Health Code, and regulations concerning inspections, citations, and proposed penalties, chapter 21, Minnesota Occupational Safety and Health Code, were approved by the Assistant Secretary on August 31, 1976.

(j) The downward revision of the projected increase in personnel for fiscal year 1976 due to a lesser than anticipated increase of funding by the Minnesota legislature, was approved by the Assistant Secretary as meeting current required staffing on August 31, 1976.

(k) The State poster approved on March 25, 1975 (40 FR 13211) which was revised in response to legislative amendments described above, to provide that citations and notices of penalties must be posted at or near the place of the alleged violation for 15 days or until the violation is corrected, whichever is later, and which lists additional Minnesota area offices, was approved by the Assistant Secretary on August 31, 1976.

(l) In accordance with § 1902.34 of this chapter, the Minnesota occupational safety and health plan was certified, effective September 28, 1976, as having completed all developmental steps specified in the plan as approved on May 29, 1973, on or before June 30, 1976.

[40 FR 13212, Mar. 25, 1975, as amended at 40 FR 18996, May 1, 1975. Redesignated at 50 FR 30831, July 30, 1985]

§ 1952.203 Compliance staffing benchmarks.

Under the terms of the 1978 Court Order in *AFL-CIO* v. *Marshall*, compliance staffing levels (benchmarks) necessary for a ''fully effective'' enforcement program were required to be established for each State operating an approved State plan. In September 1984 Minnesota, in conjunction with OSHA, completed a reassessment of the levels initially established in 1980 and proposed revised compliance staffing benchmarks of 31 safety and 12 health compliance officers. After opportunity for public comment and service on the AFL-CIO, the Assistant Secretary approved these revised staffing requirements on July 30, 1985.

[50 FR 30832, July 30, 1985]

§ 1952.204 Final approval determination.

(a) In accordance with section 18(e) of the Act and procedures in 29 CFR part 1902, and after determination that the State met the ''fully effective'' compliance staffing benchmarks as revised in 1984 in response to a Court Order in *AFL-CIO* v. *Marshall* (CA 74–406), and was satisfactorily providing reports to OSHA through participation in the Federal-State Unified Management Information System, the Assistant Secretary evaluated actual operations under the Minnesota State plan for a

period of at least one year following certification of completion of developmental steps (41 FR 42659). Based on the 18(e) Evaluation Report for the period of October 1982 through March 1984, and after opportunity for public comment, the Assistant Secretary determined that in operation the State of Minnesota's occupational safety and health program is at least as effective as the Federal program in providing safe and healthful employment and places of employment and meets the criteria for final State plan approval in section 18(e) of the Act and implementing regulations at 29 CFR part 1902. Accordingly, the Minnesota plan was granted final approval, and concurrent Federal enforcement authority was relinquished under section 18(e) of the Act effective July 30, 1985.

(b) Except as otherwise noted, the plan which has received final approval covers all activities of employers and all places of employment in Minnesota. The plan does not cover private sector offshore maritime employment on the navigable waters of the United States; employment at the Twin Cities Army Ammunition Plant; Federal government employers and employees; the U.S. Postal Service (USPS), including USPS employees, and contract employees and contractor-operated facilities engaged in USPS mail operations; any tribal or private sector employment within any Indian reservation in the State; the enforcement of the field sanitation standard, 29 CFR 1928.110, and the enforcement of the temporary labor camps standard, 29 CFR 1910.142, with respect to any agricultural establishment where employees are engaged in ''agricultural employment'' within the meaning of the Migrant and Seasonal Agricultural Worker Protection Act, 29 U.S.C. 1802(3), regardless of the number of employees, including employees engaged in hand packing of produce into containers, whether done on the ground, on a moving machine, or in a temporary packing shed, except that Minnesota retains enforcement responsibility over agricultural temporary labor camps for employees engaged in egg, poultry, or red meat production, or the post-harvest processing of agricultural or horticultural commodities.

(c) Minnesota is required to maintain a State program which is at least as effective as operations under the Federal program; to submit plan supplements in accordance with 29 CFR part 1953; to allocate sufficient safety and health enforcement staff to meet the benchmarks for State staffing established by the U.S. Department of Labor, or any revisions to those benchmarks; and, to furnish such reports in such form as the Assistant Secretary may from time to time require.

[50 FR 30832, July 30, 1985, as amended at 62 FR 2561, Jan. 17, 1997; 65 FR 36622, June 9, 2000]

§ 1952.205 Level of Federal enforcement.

(a) As a result of the Assistant Secretary's determination granting final approval to the Minnesota plan under section 18(e) of the Act, effective July 30, 1985, occupational safety and health standards which have been promulgated under section 6 of the Act do not apply with respect to issues covered under the Minnesota plan. This determination also relinquishes concurrent Federal OSHA authority to issue citations for violations of such standards under sections 5(a)(2) and 9 of the Act; to conduct inspections and investigations under section 8 (except those necessary to conduct evaluation of the plan under section 18(f) and other inspections, investigations, or proceedings necessary to carry out Federal responsibilities not specifically preempted by section 18(e)); to conduct enforcement proceedings in contested cases under section 10; to institute proceedings to correct imminent dangers under section 13; and to propose civil penalties or initiate criminal proceedings for violations of the Federal Act under section 17. The Assistant Secretary retains jurisdiction under the above provisions in any proceeding commenced under section 9 or 10 before the effective date of the 18(e) determination.

(b)(1) In accordance with section 18(e), final approval relinquishes Federal OSHA authority only with regard to occupational safety and health issues covered by the Minnesota plan. OSHA retains full authority over issues

which are not subject to State enforcement under the plan. Thus, Federal OSHA retains its authority relative to safety and health in private sector offshore maritime activities and will continue to enforce all provisions of the Act, rules or orders, and all Federal standards, current or future, specifically directed to maritime employment (29 CFR Part 1915, shipyard employment; Part 1917, marine terminals; Part 1918, longshoring; Part 1919, gear certification) as well as provisions of general industry and construction standards (29 CFR Parts 1910 and 1926) appropriate to hazards found in these employments, as they relate to employment under the exclusive jurisdiction of the Federal government on the navigable waters of the United States. Federal jurisdiction is retained and exercised by the Employment Standards Administration, U.S. Department of Labor, (Secretary's Order 5–96, dated December 27, 1996) with respect to the field sanitation standard, 29 CFR 1928.110, and the enforcement of the temporary labor camps standard, 29 CFR 1910.142, in agriculture, as described in § 1952.204(b). Federal jurisdiction is also retained over the Twin Cities Army Ammunition Plant; over Federal government employers and employees; over any tribal or private sector employment within any Indian reservation in the State; and over the U.S. Postal Service (USPS), including USPS employees, and contract employees and contractor-operated facilities engaged in USPS mail operations.

(2) In addition, any hazard, industry, geographical area, operation or facility over which the State is unable to effectively exercise jurisdiction for reasons not related to the required performance or structure of the plan shall be deemed to be an issue not covered by the finally approved plan, and shall be subject to Federal enforcement. Where enforcement jurisdiction is shared between Federal and State authorities for a particular area, project, or facility, in the interest of administrative practicability, Federal jurisdiction may be assumed over the entire project or facility. In either of the two aforementioned circumstances, Federal enforcement may be exercised immediately upon agreement between Federal and State OSHA.

(c) Federal authority under provisions of the Act not listed in section 18(e) is unaffected by final approval of the plan. Thus, for example, the Assistant Secretary retains his authority under section 11(c) of the Act with regard to complaints alleging discrimination against employees because of the exercise of any right afforded to the employee by the Act, although such complaints may be referred to the State for investigation. The Assistant Secretary also retains his authority under section 6 of the Act to promulgate, modify or revoke occupational safety and health standards which address the working conditions of all employees, including those in States which have received an affirmative 18(e) determination, although such standards may not be Federally applied. In the event that the State's 18(e) status is subsequently withdrawn and Federal authority reinstated, all Federal standards, including any standards promulgated or modified during the 18(e) period, would be Federally enforceable in that State.

(d) As required by section 18(f) of the Act, OSHA will continue to monitor the operations of the Minnesota State program to assure that the provisions of the State plan are substantially complied with and that the program remains at least as effective as the Federal program. Failure by the State to comply with its obligations may result in the revocation of the final determination under section 18(e), resumption of Federal enforcement, and/or proceedings for withdrawal of plan approval.

[50 FR 30832, July 30, 1985, as amended at 62 FR 2562, Jan. 17, 1997; 65 FR 36623, June 9, 2000]

§ 1952.206 Where the plan may be inspected.

A copy of the principal documents comprising the plan may be inspected and copied during normal business hours at the following locations:

Office of State Programs, Occupational Safety and Health Administration, U.S. Department of Labor, 200 Constitution Avenue NW, Room N3700, Washington, DC 20210;

Office of the Regional Administrator, Occupational Safety and Health Administration, U.S. Department of Labor, 230 S. Dearborn Street, 32nd Floor, Room 3244, Chicago, Illinois 60604; and

Office of the Commissioner, Minnesota Department of Labor and Industry, 443 Lafayette Road, St. Paul, Minnesota 55155.

[65 FR 36623, June 9, 2000]

§ 1952.207 Changes to approved plans.

(a) *Legislation*. (1) On March 29, 1994, the Assistant Secretary approved Minnesota's revised statutory penalty levels which are the same as the revised Federal penalty levels contained in section 17 of the Act as amended on November 5, 1990.

(2) [Reserved]

(b) *Temporary labor camps/field sanitation*. Effective February 3, 1997, the Assistant Secretary approved Minnesota's plan amendment, dated July 24, 1996, relinquishing coverage for the issues of field sanitation (29 CFR 1928.110) and temporary labor camps (29 CFR 1910.142) in agriculture (except for agricultural temporary labor camps associated with egg, poultry or red meat production, or the post-harvest processing of agricultural or horticultural commodities). The Employment Standards Administration, U.S. Department of Labor, has assumed responsibility for enforcement of these Federal OSHA standards in agriculture in Minnesota pursuant to Secretary of Labor's Order 5–96, dated December 27, 1996.

[59 FR 14556, Mar. 29, 1994, as amended at 62 FR 2562, Jan. 17, 1997]

Subpart O—Maryland

§ 1952.210 Description of the plan as initially approved.

(a) The Division of Labor and Industry in the Department of Licensing and Regulation is the State agency designated by the Governor to administer the plan throughout the State. The plan defines the covered occupational safety and health issues on the basis of Major Groups in the Standard Industrial Classification (SIC) Manual of the Office of Management and Budget of the Executive Office of the President. The Commissioner of the Division of Labor and industry promulgated the Federal standards existing as of February 2, 1973. These standards were effective in Maryland as of March 8, 1973, and they will be enforced according to current State legislative authority prior to the effective date of Maryland's enabling legislation, July 1, 1973. Maryland also intends to adopt those Federal standards applicable to ship repairing, ship building, ship breaking and longshoring except where prohibited by exclusive Federal maritime jurisdiction. Subsequent revisions to Federal standards will be considered by the State Occupational Safety and Health Advisory Board which will make recommendations on adoption of at least as effective standards to the Commissioner within 6 months after Federal promulgation. Maryland also includes in its plan State boiler and elevator standards where applicable.

(b)(1) The plan included draft legislation which has been passed by the State legislature and signed by the Governor. The legislation as enacted has been included as a supplement to the plan. Under the legislation, effective July 1, 1973, the Division of Labor and Industry in the Department of Licensing and Regulation has full authority to enforce and administer laws respecting safety and health of employees in all workplaces of the State, including coverage of public employees, with the exception of maritime workers in the areas of exclusive Federal jurisdiction; employees of the United States; and employees whose working conditions are protected under enumerated Federal laws.

(2) The legislation brings the plan into conformity with the requirements of 29 CFR part 1902 in areas such as procedures for granting or denying temporary and permanent variances to rules, regulations or standards by the Commissioner; protection of employees from hazards including provision for medical examinations made available by the employer or at his cost; procedures for the development of standards by the Occupational Safety and Health Advisory Board; promulgation of these standards as recommended by the Commissioner; promulgation of emergency

temporary standards by the Commissioner with referral to the Board to develop a permanent standard; procedures for prompt restraint or elimination of imminent danger situations by issuance of a ''red-tag'' order with court review as well as by court injunction.

(3) The legislation provides for inspections in response to complaints; gives employer and employee representatives an opportunity to accompany inspectors in order to aid inspections; notification of employees or their representatives when no compliance action is taken as a result of alleged violations, including informal review; protection of employees against discharge or discrimination in terms and conditions of employment by filing complaints with the Commissioner who will seek court action; adequate safeguards to protect trade secrets; provision for prompt notice to employers and employees of alleged violations of standards and abatement requirements through the issuance and posting of citations; a system of sanctions against employers for violations of standards; employer right of review and employee participation in review proceedings before the Commissioner with subsequent judicial review; and coverage of employees of the State and political subdivisions in a separate program supervised by the Commissioner in accordance with the requirements described in the North Carolina decision (38 FR 3041).

(c) Included in the plan is a statement of legal opinion that the law, which was supported by the Governor in accordance with the requirements of part 1902, meets the requirements of the Occupational Safety and Health Act of 1970 and is consistent with the Constitution and laws of Maryland. The plan sets out goals and provides a timetable for bringing it into full conformity with part 1902 at the end of three years after the commencement of operations under the plan. Personnel will be employed under the existing State merit system with the revisions in qualifications as stated in supplements to the plan, and the voluntary compliance program for on-site consultation meets the conditions set forth in the issues discussed in the Washington decision (38 FR 2421).

(d) The plan includes the following documents as of the date of approval.

(1) The plan document in two volumes.

(2) Maryland Occupational Safety and Health Act of 1973, effective July 1, 1973.

(3) ''A Program for Control of Occupational Health Hazards in Maryland'' by Johns Hopkins University Department of Environmental Medicine.

(4) Letters from the Division of Labor and Industry dated February 9, 1973; March 6, 1973; March 22, 1973; May 2, 1973 and May 21, 1973.

(5) Maryland's Administrative Procedure Act Article 41 sections 244 *et seq*.

[38 FR 17837, July 5, 1973, as amended at 50 FR 29219, July 18, 1985]

§ 1952.211 Developmental schedule.

(a) Occupational health study accepted and implementation begun July, 1973;

(b) Compliance Manual developed by July, 1973;

(c) Management Information System, December, 1975;

(d) Training in compliance procedures by August, 1973;

(e) Promulgation of standard-setting procedures, August, 1973;

(f) Inspection and enforcement program, except as provided in paragraph (k), in September, 1973;

(g) Staff of hearing examiners and review procedures set up in September, 1973;

(h) Variance procedures and emergency temporary standard-setting procedures promulgated October, 1973;

(i) Review of appeal procedures to see if it should be continued or modified, July, 1974;

(j) Review of job qualifications within one year of plan approval;

(k) Inspection and enforcement of agriculture standards by December, 1974;

(l) Fully operational occupational health program, July, 1975;

(m) Fully implemented public employees program, December, 1975;

[38 FR 17837, July 5, 1973, as amended at 41 FR 45564, Oct. 15, 1976. Redesignated at 50 FR 29219, July 18, 1985]

§ 1952.212 Completion of developmental steps and certification.

(a) In accordance with part 1953 of this chapter, the Maryland occupational safety and health standards were approved by OSHA on October 3, 1974.

(b) In accordance with the requirements of 29 CFR 1952.10, the Maryland State poster was approved by the Assistant Secretary on June 6, 1975.

(c) In accordance with the commitment expressed in § 1952.213(l), the State of Maryland developed and implemented an occupational health plan by December 31, 1975.

(d) In accordance with the commitment expressed in § 1952.213(n), the designee developed a fully operational Management Information System by May 1, 1975.

(e) In accordance with 29 CFR 1952.213(d), training of Maryland compliance personnel in compliance procedure was completed by December 31, 1975.

(f) In accordance with 29 CFR 1952.213(f), the Maryland inspection and enforcement program was implemented by September 1973.

(g) In accordance with 29 CFR 1952.213(j), review of the appeal procedures to see if they should be continued or modified was conducted by the State by May 1975.

(h) In accordance with 29 CFR 1952.213(b), Maryland completed development of a Compliance Manual.

(i) In accordance with 29 CFR 1952.213(e), the State has promulgated acceptable standard-setting procedures.

(j) In accordance with 29 CFR 1952.213(h), Maryland promulgated acceptable variance procedures and emergency temporary standard-setting procedures.

(k) In accordance with 29 CFR 1952.213(j), review of the job qualifications of State personnel was conducted by the State.

(l) In accordance with 29 CFR 1952.213(m), the State of Maryland has developed and implemented a safety and health program for public employees

(m) In accordance with 29 CFR 1952.213(a), the State submitted an occupational health study, and the State's occupational health plan is being implemented.

(n) In accordance with 29 CFR 1952.213(g), the State established a staff of hearing examiners and review procedures.

(o) In accordance with 29 CFR 1952.213(k), agricultural standards are being enforced by the Maryland Department of Labor and Industry.

(p) In accordance with § 1902.34 of this chapter, the Maryland occupational safety and health plan was certified effective February 15, 1980, as having completed all developmental steps specified in the plan as approved on July 5, 1973, on or before August 31, 1976. This certification attests to structural completion, but does not render judgment on adequacy of performance.

[40 FR 25207, June 13, 1975, as amended at 41 FR 45564, Oct. 15, 1976; 42 FR 10988, Feb. 25, 1977; 44 FR 28326, 28327, May 15, 1979; 45 FR 10337, Feb. 15, 1980. Redesignated at 50 FR 29219, July 18, 1985, as amended at 67 FR 60129, Sept. 25, 2002]

§ 1952.213 Compliance staffing benchmarks.

Under the terms of the 1978 Court Order in *AFL-CIO* v. *Marshall* compliance staffing levels (benchmarks) necessary for a ''fully effective'' enforcement program were required to be established for each State operating an approved State plan. In September 1984 Maryland, in conjunction with OSHA, completed a reassessment of the levels initially established in 1980 and proposed revised compliance staffing benchmarks of 36 safety and 18 health compliance officers. After opportunity for public comment and service on the AFL-CIO, the Assistant Secretary approved these revised staffing requirements on July 18, 1985.

[50 FR 29219, July 18, 1985]

§ 1952.214 Final approval determination.

(a) In accordance with section 18(e) of the Act and procedures in 29 CFR part 1902, and after determination that the State met the ''fully effective'' compliance staffing benchmarks as revised in 1984 in response to a Court Order in *AFL-CIO* v. *Marshall* (CA 74–406), and was satisfactorily providing reports to OSHA through participation in the

Federal-State Unified Management Information System, the Assistant Secretary evaluated actual operations under the Maryland State plan for a period of at least one year following certification of completion of developmental steps (45 FR 10335). Based on the 18(e) Evaluation Report for the period of October 1982 through March 1984, and after opportunity for public comment, the Assistant Secretary determined that in operation the State of Maryland's occupational safety and health program is at least as effective as the Federal program in providing safe and healthful employment and places of employment and meets the criteria for final State plan approval in section 18(e) of the Act and implementing regulations at 29 CFR part 1902. Accordingly, the Maryland plan was granted final approval and concurrent Federal enforcement authority was relinquished under section 18(e) of the Act effective July 18, 1985.

(b) Except as otherwise noted, the plan which has received final approval covers all activities of employers and all places of employment in Maryland. The plan does not cover private sector maritime employment; Federal government employers and employees; the U.S. Postal Service (USPS), including USPS employees, and contract employees and contractor-operated facilities engaged in USPS mail operations; and employment on military bases.

(c) Maryland is required to maintain a State program which is at least as effective as operations under the Federal program; to submit plan supplements in accordance with 29 CFR part 1953; to allocate sufficient safety and health enforcement staff to meet the benchmarks for State staffing established by the U.S. Department of Labor, or any revisions to those benchmarks; and, to furnish such reports in such form as the Assistant Secretary may from time to time require.

[50 FR 29220, July 18, 1985, as amended at 65 FR 36623, June 9, 2000]

§ 1952.215 Level of Federal enforcement.

(a) As a result of the Assistant Secretary's determination granting final approval to the Maryland plan under section 18(e) of the Act, effective July 18, 1985, occupational safety and health standards which have been promulgated under section 6 of the Act do not apply with respect to issues covered under the Maryland plan. This determination also relinquishes concurrent Federal OSHA authority to issue citations for violations of such standards under sections 5(a)(2) and 9 of the Act; to conduct inspections and investigations under section 8 (except those necessary to conduct evaluation of the plan under section 18(b) and other inspections, investigations, or proceedings necessary to carry out Federal responsibilities not specifically preempted by section 18(e)); to conduct enforcement proceedings in contested cases under section 10; to institute proceedings to correct imminent dangers under section 13; and to propose civil penalties or initiate criminal proceedings for violations of the Federal Act under section 17. The Assistant Secretary retains jurisdiction under the above provisions in any proceeding commenced under section 9 or 10 before the effective date of the 18(e) determination.

(b)(1) In accordance with section 18(e), final approval relinquishes Federal OSHA authority only with regard to occupational safety and health issues covered by the Maryland plan. OSHA retains full authority over issues which are not subject to State enforcement under the plan. Thus, Federal OSHA retains its authority relative to safety and health in private sector maritime activities and will continue to enforce all provisions of the Act, rules or orders, and all Federal standards, current or future, specifically directed to private sector maritime employment (29 CFR Part 1915, shipyard employment; Part 1917, marine terminals; Part 1918, longshoring; Part 1919, gear certification), as well as provisions of general industry and construction standards (29 CFR Parts 1910 and 1926) appropriate to hazards found in these employments; and employment on military bases. Federal jurisdiction is also retained with respect to Federal government employers and employees; and the U.S. Postal Service (USPS), including USPS employees, and contract

employees and contractor-operated facilities engaged in USPS mail operations.

(2) In addition, any hazard, industry, geographical area, operation or facility over which the State is unable to effectively exercise jurisdiction for reasons not related to the required performance or structure of the plan shall be deemed to be an issue not covered by the finally approved plan, and shall be subject to Federal enforcement. Where enforcement jurisdiction is shared between Federal and State authorities for a particular area, project, or facility, in the interest of administrative practicability Federal jurisdiction may be assumed over the entire project or facility. In either of the two aforementioned circumstances, Federal enforcement may be exercised immediately upon agreement between Federal and State OSHA.

(c) Federal authority under provisions of the Act not listed in section 18(e) is unaffected by final approval of the plan. Thus, for example, the Assistant Secretary retains his authority under section 11(c) of the Act with regard to complaints alleging discrimination against employees because of the exercise of any right afforded to the employee by the Act, although such complaints may be referred to the State for investigation. The Assistant Secretary also retains his authority under section 6 of the Act to promulgate, modify or revoke occupational safety and health standards which address the working conditions of all employees, including those in States which have received an affirmative 18(e) determination, although such standards may not be Federally applied. In the event that the State's 18(e) status is subsequently withdrawn and Federal authority reinstated, all Federal standards, including any standards promulgated or modified during the 18(e) period, would be Federally enforceable in that State.

(d) As required by section 18(f) of the Act, OSHA will continue to monitor the operations of the Maryland State program to assure that the provisions of the State plan are subtantially complied with and that the program remains at least as effective as the Federal program. Failure by the State to comply with its obligations may result in the revocation of the final determination under section 18(e), resumption of Federal enforcement, and/or proceedings for withdrawal of plan approval.

[50 FR 29220, July 18, 1985, as amended at 65 FR 36623, June 9, 2000]

§ 1952.216 Where the plan may be inspected.

A copy of the principal documents comprising the plan may be inspected and copied during normal business hours at the following locations:

Office of State Programs, Occupational Safety and Health Administration, U.S. Department of Labor, 200 Constitution Avenue NW, Room N3700, Washington, DC 20210;

Office of the Regional Administrator, Occupational Safety and Health Administration, U.S. Department of Labor, The Curtis Center, 170 South Independence Mall West—Suite 740 West, Philadelphia, Pennsylvania 19106–3309; and

Office of the Commissioner, Maryland Division of Labor and Industry, Department of Labor, Licensing and Regulation, 1100 N. Eutaw Street, Room 613, Baltimore, Maryland 21201–2206.

[65 FR 36623, June 9, 2000]

§ 1952.217 Changes to approved plans.

(a) *Legislation.* (1) On March 29, 1994, the Assistant Secretary approved Maryland's revised statutory penalty levels which are the same as the revised Federal penalty levels contained in section 17 of the Act as amended on November 5, 1990.

(2) [Reserved]

(b) [Reserved]

[59 FR 14556, Mar. 29, 1994]

Subpart P—Tennessee

§ 1952.220 Description of the plan as initially approved.

(a) The plan identifies the Department of Labor and the Department of Health as the agencies designated to administer the plan throughout the State. It adopts the definition of occupational safety and health issues expressed in § 1902.2(c)(1) of this chapter. All standards, except those found in 29 CFR parts 1915, 1916, 1917, and 1918 (ship repairing, ship building, ship breaking

and longshoring) will be adopted and enforced immediately upon approval of the plan by the Assistant Secretary.

(b)(1) The plan includes legislation passed by the Tennessee Legislature during its 1972 session which became effective July 1, 1972. Under the law, the Department of Labor and the Department of Public Health will have full authority to enforce and administer laws respecting safety and health of employees in all workplaces of the State with the exception of employees of the United States or employees protected under other Federal occupational safety and health laws such as the Atomic Energy Act of 1959 (42 U.S.C. 2011 *et seq.*). The Federal Coal Mine Safety Act of 1969 (30 U.S.C. 801), the Federal Metal and Nonmetallic Mine Safety Act (30 U.S.C. 721 *et seq.*) railroad employees covered by the Federal Safety Appliances Act (45 U.S.C. 1 *et seq.*) and the Federal Railroad Safety Act (45 U.S.C. 421 *et seq.*), the Longshoremen's and Harbor Workers' Compensation Act, as amended (33 U.S.C. 901 *et seq.*), domestic workers, and any employee engaged in agriculture who is employed on a family farm. The Act further provides for the protection of employees from hazards, procedures for the development and promulgation of standards, including standards for protection of employees against new and unforeseen hazards; procedures for prompt restraint or elimination of imminent danger situations.

(2) The Act also insures inspections in response to complaints; employer and employee representatives an opportunity to accompany inspectors in order to aid inspections; notification of employees or their representative when no compliance action is taken as a result of alleged violations, including informal review; notification of employees of their protections and obligations; adequate safeguards to protect trade secrets; provisions for prompt notice to employers and employees of alleged violations of standards and abatement requirements; a system of sanctions against employers for violations of standards; employer right of review with employee participation in review proceedings, and coverage of employees of political subdivisions. Legislation which became effective on April 5, 1973, providing for ''stop orders'' for cases of imminent danger situations is also included.

(c)(1) The plan further includes proposed amendments submitted by the State which will be presented to the 1974 session of the State legislature to bring its Occupational Safety and Health Act into conformity with the requirements of 29 CFR part 1902. These amendments pertain to such areas as permanent variances, employee protection against discharge or discrimination in terms and conditions of employment, imminent danger situations, sanctions, and walkaround. A statement of the Governor's support for the proposed amandments and a statement of legal opinion that they will meet the requirements of the Occupational Safety and Health Act of 1970 and is consistent with the Constitution and laws of the State are included in the plan.

(2) The plan provides a comprehensive description of personnel employed under the State's merit system and assurances of sufficient resources. The plan further sets out goals and provides a timetable to bring it into full conformity with the requirements of part 1902 of this chapter.

(d) The Tennessee plan includes the following documents as of the date of approval:

(1) The plan description documents including the Tennessee Occupational Safety and Health Act, the proposed amendments to the Act and appendices in three (3) volumes;

(2) Letter from Ben O. Gibbs, Commissioner of Labor to Henry J. Baker, Project Officer, Office of State and Federal Operations, February 14, 1973, submitting additions and deletions to the plan.

(3) Letter from Edward C. Nichols, Jr., Staff Attorney for the Department of Labor, to Henry Baker, May 30, 1973, submitting a ''red tag'' provision which was signed into law by the Governor of Tennessee on April 5, 1973.

(4) Letter from Ben O. Gibbs, Commissioner of Labor and Eugene W. Fowinkle, Commissioner of Public Health, to Thomas C. Brown, Director, Office of Federal and State Operations, June 15, 1973, submitting proposed

amendments and clarifications to the plan.

(e) The public comments will also be available for inspection and copying with the plan documents.

[38 FR 17840, July 5, 1973, as amended at 50 FR 29669, July 22, 1985]

§ 1952.221 Developmental schedule.

The Tennessee state plan is developmental. The following is the developmental schedule as provided by the plan:

(a) Formal adoption of Federal standards immediately upon approval of State plan. (Existing State standards were repealed by the enabling legislation). Enforcement of standards commences immediately upon promulgation.

(b) Amendments to legislation to be submitted to 1974 State legislative session.

(c) Regulations for recordkeeping and reporting will be promulgated upon plan approval.

(d) Regulations for inspections, citations, and proposed penalties will be promulgated immediately upon plan approval.

(e) Variances regulations will be promulgated within 60 days of plan approval.

(f) Manual Management data system operational July 1, 1973. Automated Management data system operational January 1, 1974.

[38 FR 17840, July 5, 1973. Redesignated at 50 FR 29669, July 22, 1985]

§ 1952.222 Completed developmental steps.

(a) In accordance with § 1952.223(b), the Tennessee Occupational Safety and Health Act of 1972 was amended by Chapter 585, Public Acts of 1974, on March 20, 1974, with an effective date of July 1, 1974 and approved by the Secretary of Labor in August 15, 1975 (40 FR 36556). Further State-initiated amendments to the Act transferring all occupational safety and health responsibility to the Commissioner of Labor were promulgated effective July 1, 1977, and approved by the Assistant Secretary on May 3, 1978.

(b) In accordance with § 1952.223(d), regulations governing inspections, citations, and proposed penalties were originally promulgated by the Commissioner of Labor on July 2, 1973 (effective July 13, 1973) and approved by the Assistant Secretary on August 15, 1975 (40 FR 36556). These regulations were subsequently codified as Tennessee Department of Labor Chapter 0800–1–4 and reapproved by the Assistant Secretary, as amended, on May 3, 1978. The Tennessee Commissioner of Public Health promulgated parallel regulations on April 3, 1974 (effective May 3, 1974) which were also approved on August 15, 1975. These Department of Public Health regulations became inoperative on July 1, 1977.

(c) In accordance with § 1952.223(e), regulations governing temporary variances were promulgated by the Commissioner of Labor on July 2, 1973 (effective July 13, 1973) and approved by the Assistant Secretary on August 15, 1975, (40 FR 36566). These regulations, which were subsequently codified as Tennessee Department of Labor Chapter 0800–1–2, were expanded to include permanent variances, and amended in response to Federal comment, and reapproved by the Assistant Secretary on May 3, 1978. The Commissioner of Public Health promulgated regulations dealing with temporary variances on April 3, 1974, (effective May 3, 1974) which were also approved by the Secretary on August 15, 1975. These Department of Public Health regulations became inoperative on July 1, 1977.

(d) In accordance with the requirements of 29 CFR 1952.10, the Tennessee occupational safety and health poster for private employers and local government employers choosing to be treated as private employers was approved by the Assistant Secretary on August 15, 1975. In addition, a Tennessee occupational safety and health poster for public employees was approved by the Assistant Secretary on May 3, 1978.

(e) In accordance with § 1952.223(a) the Tennessee occupational safety and health standards identical to Federal standards (through December 26, 1974) have been promulgated and approved, as revised, by the Assistant Regional Director on March 31, 1975 (40 FR 14383).

(f) In accordance with § 1952.223(f) Tennessee implemented a manual management information system in July

1973, and converted to an automated system in July 1975.

(g) In accordance with plan commitments, regulations governing Occupational Safety and Health Recordkeeping and Reporting (Chapter 0800–1–3) were promulgated by the Tennessee Department of Labor on June 10, 1974, and subsequently amended on April 15, 1976, July 14, 1977, August 15, 1977 and February 13, 1978. These regulations, which contain requirements essentially identical to the Federal 29 CFR part 1904, were approved by the Assistant Secretary on May 3, 1978.

(h) In accordance with plan commitments, the Tennessee Occupational Safety and Health Review Commission promulgated regulations governing its operation on May 5, 1974 (Chapters 1030–1 through 1030–7). These regulations were subsequently amended in response to Federal comment on February 13, 1978, and approved by the Assistant Secretary on May 3, 1978.

(i) In accordance with plan commitments, Tennessee revised its original Compliance Operations Manual on May 19, 1975. The manual which was subsequently amended in response to Federal comment and to reflect all Federal procedures in effect as of December 1, 1976, was approved by the Assistant Secretary on May 3, 1978.

(j) In accordance with State plan commitments, a Tennessee Public Employee plan and implementing regulations (Tennessee Department of Labor Chapter 0800–1–5) have been adopted and were approved by the Assistant Secretary on May 3, 1978.

(k) In accordance with § 1902.34 of this chapter, the Tennessee occupational safety and health plan received certification, effective May 3, 1978, as having completed all developmental steps specified in its plan as approved on June 28, 1973, on or before July 1, 1976.

[40 FR 36567, Aug. 21, 1975, as amended at 42 FR 58747, Nov. 11, 1977; 43 FR 20982–20986, May 16, 1978. Redesignated at 50 FR 29669, July 22, 1985]

§ 1952.223 Compliance staffing benchmarks.

Under the terms of the 1978 Court Order in *AFL-CIO* v. *Marshall* compliance staffing levels (benchmarks) necessary for a ''fully effective'' enforcement program were required to be established for each State operating an approved State plan. In September 1984 Tennessee, in conjunction with OSHA, completed a reassessment of the levels initially established in 1980 and proposed revised compliance staffing benchmarks of 22 safety and 14 health compliance officers. After opportunity for public comment and service on the AFL-CIO, the Assistant Secretary approved these revised staffing requirements on July 22, 1985.

[50 FR 29669, July 22, 1985]

§ 1952.224 Final approval determination.

(a) In accordance with section 18(e) of the Act and procedures in 29 CFR part 1902, and after determination that the State met the ''fully effective'' compliance staffing benchmarks as revised in 1984 in response to a Court Order in *AFL-CIO* v. *Marshall* (CA 74–406), and was satisfactorily providing reports to OSHA through participation in the Federal-State Unified Management Information System, the Assistant Secretary evaluated actual operations under the Tennessee State plan for a period of at least one year following certification of completion of developmental steps (43 FR 20980). Based on the 18(e) Evaluation Report for the period of October 1982 through March 1984, and after opportunity for public comment, the Assistant Secretary determined that in operation the State of Tennessee's occupational safety health program is at least as effective as the Federal program in providing safe and healthful employment and places of employment and meets the criteria for final State plan approval in section 18(e) of the Act and implementing regulations at 29 CFR part 1902. Accordingly, the Tennessee plan was granted final approval and concurrent Federal enforcement authority was relinquished under section 18(e) of the Act effective July 22, 1985.

(b) Except as otherwise noted, the plan which has received final approval covers all activities of employers and all places of employment in Tennessee. The plan does not cover private sector maritime employment; Federal government employers and employees; the U.S. Postal Service (USPS), including

USPS employees, and contract employees and contractor-operated facilities engaged in USPS mail operations; railroad employment; employment at Tennessee Valley Authority facilities and on military bases, as well as any other properties ceded to the United States Government.

(c) Tennessee is required to maintain a State program which is at least as effective as operations under the Federal program; to submit plan supplements in accordance with 29 CFR part 1953; to allocate sufficient safety and health enforcement staff to meet the benchmarks for State staffing established by the U.S. Department of Labor, or any revisions to those benchmarks; and, to furnish such reports in such form as the Assistant Secretary may from time to time require.

[50 FR 29669, July 22, 1985, as amended at 65 FR 36624, June 9, 2000]

§ 1952.225 Level of Federal enforcement.

(a) As a result of the Assistant Secretary's determination granting final approval to the Tennessee plan under section 18(e) of the Act, effective July 22, 1985, occupational safety and health standards which have been promulgated under section 6 of the Act do not apply with respect to issues covered under the Tennessee plan. This determination also relinquishes concurrent Federal OSHA authority to issue citations for violations of such standards under sections 5(a)(2) and 9 of the Act; to conduct inspections and investigations under section 8 (except those necessary to conduct evaluation of the plan under section 18(b) and other inspections, investigations, or proceedings necessary to carry out Federal responsibilities not specifically preempted by section 18(e)); to conduct enforcement proceedings in contested cases under section 10; to institute proceedings to correct imminent dangers under section 13; and to propose civil penalties or initiate criminal proceedings for violations of the Federal Act under section 17. The Assistant Secretary retains jurisdiction under the above provisions in any proceeding commenced under section 9 or 10 before the effective date of the 18(e) determination.

(b)(1) In accordance with section 18(e), final approval relinquishes Federal OSHA authority only with regard to occupational safety and health issues covered by the Tennessee plan. OSHA retains full authority over issues which are not subject to State enforcement under the plan. Thus, Federal OSHA retains its authority relative to safety and health in private sector maritime activities and will continue to enforce all provisions of the Act, rules or orders, and all Federal standards, current or future, specifically directed to maritime employment (29 CFR Part 1915, shipyard employment; Part 1917, marine terminals; Part 1918, longshoring; Part 1919, gear certification) as well as provisions of general industry and construction standards (29 CFR Parts 1910 and 1926) appropriate to hazards found in these employments; railroad employment, not otherwise regulated by another Federal agency; employment at Tennessee Valley Authority facilities and on military bases. Federal jurisdiction is also retained with respect to Federal government employers and employees, and the U.S. Postal Service (USPS), including USPS employees, and contract employees and contractor-operated facilities engaged in USPS mail operations.

(2) In addition, any hazard, industry, geographical area, operation or facility over which the State is unable to effectively exercise jurisdiction for reasons not related to the required performance or structure of the plan shall be deemed to be an issue not covered by the finally approved plan, and shall be subject to federal enforcement. Where enforcement jurisdiction is shared between Federal and State authorities for a particular area, project, or facility, in the interest of administrative practicability Federal jurisdiction may be assumed over the entire project or facility. In either of the two aforementioned circumstances, Federal enforcement may be exercised immediately upon agreement between Federal and State OSHA.

(c) Federal authority under provisions of the Act not listed in section 18(e) is unaffected by final approval of the plan. Thus, for example, the Assistant Secretary retains his authority

under section 11(c) of the Act with regard to complaints alleging discrimination against employees because of the exercise of any right afforded to the employee by the Act, although such complaints may be referred to the State for investigation. The Assistant Secretary also retains his authority under section 6 of the Act to promulgate, modify or revoke occupational safety and health standards which address the working conditions of all employees, including those in States which have received an affirmative 18(e) determination, although such standards may not be federally applied. In the event that the State's 18(e) status is subsequently withdrawn and Federal authority reinstated, all Federal standards, including any standards promulgated or modified during the 18(e) period, would be federally enforceable in that State.

(d) As required by section 18(f) of the Act, OSHA will continue to monitor the operations of the Tennessee State program to assure that the provisions of the State plan are substantially complied with and that the program remains at least as effective as the Federal program. Failure by the State to comply with its obligations may result in the revocation of the final determination under section 18(e), resumption of Federal enforcement, and/or proceedings for withdrawal of plan approval.

[50 FR 29670, July 22, 1985, as amended at 65 FR 36624, June 9, 2000]

§ 1952.226 Where the plan may be inspected.

A copy of the principal documents comprising the plan may be inspected and copied during normal business hours at the following locations:

Office of State Programs, Occupational Safety and Health Administration, U.S. Department of Labor, 200 Constitution Avenue NW, Room N3700, Washington, DC 20210;

Office of the Regional Administrator, Occupational Safety and Health Administration, U.S. Department of Labor, Atlanta Federal Center, 61 Forsyth Street, SW, Room 6T50, Atlanta, Georgia 30303; and

Office of the Commissioner, Tennessee Department of Labor, 710 James Robertson Parkway, Nashville, Tennessee 37243–0659.

[65 FR 36624, June 9, 2000]

§ 1952.227 Changes to approved plans.

(a) *Legislation.* (1) On March 29, 1994, the Assistant Secretary approved Tennessee's revised statutory penalty levels which are the same as the revised Federal penalty levels contained in section 17 of the Act as amended on November 5, 1990.

(2) [Reserved]

(b) *The Voluntary Protection Program.* On October 24, 1996, the Assistant Secretary approved Tennessee's plan supplement, which is generally identical to the Federal Voluntary Protection Program, with the exception that the State's VPP is limited to the ''Star'' level participation for general industry firms.

[59 FR 14556, Mar. 29, 1994, as amended at 61 FR 55099, Oct. 24, 1996]

Subpart Q—Kentucky

SOURCE: 50 FR 24896, June 13, 1985, unless otherwise noted.

§ 1952.230 Description of the plan as initially approved.

(a) The plan designates the Department of Labor as the agency responsible for administering the Plan throughout the State. It proposes to define the occupational safety and health issue covered by it as defined by the Secretary of Labor in § 1902.2(c)(1) of this chapter. All occupational safety and health standards promulgated by the United States Secretary of Labor have been adopted under the Plan as well as a certain standard deemed to be ''as effective as'' the Federal standard, except those found in parts 1915, 1916, 1917 and 1918 of this chapter (ship repairing, ship building, ship breaking and longshoring). All Federal standards adopted by the State became effective on December 29, 1972.

(b) Within the plan there is enabling legislation revising chapter 338 of the Kentucky Revised Statutes which became law on March 27, 1972; as well as legislation enacted and approved in a Special Session of the Legislature in

1972 amending the enabling legislation. The law as enacted and modified gives the Department of Labor, Division of Occupational Safety and Health, the statutory authority to implement an occupational safety and health plan modeled after the Federal Act. There are provisions within it granting the Commissioner of Labor the authority to inspect workplaces and to issue citations for the abatement of violations and there is also included a prohibition against advance notice of such inspections. The law is also intended to insure employer and employee representatives an opportunity to accompany inspectors and to call attention to possible violations; notification of employees or their representatives when no compliance action is taken as a result of employee alleged violations; protection of employees against discrimination in terms and conditions of employment; and adequate safeguards to protect trade secrets. There is provision made for the prompt restraint of imminent danger situations and a system of penalties for violation of the statute. There are also provisions creating the Kentucky Occupational Safety and Health Standards Board and the Kentucky Occupational Safety and Health Review Board. The Law has further provision that the Department of Labor will enter into an agreement with the Public Service Commission (PSC) which shall serve as the State agency in the administration of all matters relating to occupational safety and health with respect to employees of public utilities.

(c) The plan includes an opinion from the Attorney General that the Law is consistent with the Constitution of the State. There is also set forth in the Plan a Time Schedule for the Development of a Public Employee Program. The Plan also contains a comprehensive description of personnel employed under the State's merit system as well as its proposed budget and resources.

(d) The Kentucky plan includes the following documents as of the date of approval:

(1) The plan description documents, including the Kentucky Occupational Safety and Health Act, and appendices in three (3) volumes;

(2) Letter for James R. Yocum, Commissioner of the Kentucky Department of Labor, to Basil A. Needham, Jr., Regional Administrator, Atlanta, Georgia Office, Occupational Safety and Health Administration, June 14, 1973, submitting additions and clarifications to the plan.

(3) Letter from James R. Yocum to the Assistant Secretary of Labor, John H. Stender, July 13, 1973, submitting assurances that the State will submit certain amendments to the 1974 Session of its Legislature.

(e) The public comments will also be available for inspection and copying with the plan documents.

[38 FR 20324, July 31, 1973, as amended at 50 FR 24896, June 13, 1985]

§ 1952.231 Developmental schedule.

The Kentucky state plan is developmental. The following is the developmental schedule as provided by the plan:

(a) A comprehensive public employee program will be developed within three years of plan approval.

(b) Within six months after plan approval, the procedure for the promulgation of standards will be revised.

(c) An affirmative action program will be submitted to the Assistant Secretary as well as clearance of possible inconsistencies of the State Merit System by the Civil Service Commission within six months after grant approval.

(d) Revision of various regulations, including those pertaining to employee access to information on their exposure to toxic materials or harmful physical agents and contests before the Review Commission will be undertaken within six months after plan approval.

(e) Submission of amendments to KRS chapter 338 in 1974 General Assembly, to provide temporary variance authority and incorporate in that chapter penalties for willful violations causing death.

[38 FR 20324, July 31, 1973. Redesignated at 50 FR 24896, June 13, 1985]

§ 1952.232 Completion of developmental steps and certification.

(a) In accordance with the requirements of § 1952.10 the Kentucky Safety

and Health Poster for private and public employees was approved by the Assistant Secretary on May 20, 1976.

(b) Amendments in the Kentucky enabling legislation were enacted to include (1) a division of occupational safety and health compliance and a division of education and training (KRS 333.153(a)) and (2) authority and procedures for granting temporary variances. Penalties for willful violations causing death of an employee are covered under KRS chapters 434, 503 and 534.

(c) An amended Kentucky Administrative Procedure Act (KRS chapter 13) provides procedures for promulgation of standards and administrative regulations including emergency temporary standards.

(d) Kentucky regulations governing recordkeeping and reporting (parallel to the Federal 29 CFR part 1904), inspections, citations, proposed penalties (parallel to the Federal 29 CFR part 1903) and variances (parallel to the Federal 29 CFR part 1905) were initially approved with the State plan on July 31, 1973. These regulations were expanded to provide for:

(1) Penalties for failure to correct violations;

(2) Mandatory penalties for failure to post a citation;

(3) Procedures for petition for modification of abatement dates and

(4) Procedures for granting temporary variances.

In addition, Kentucky adopted regulations pertaining to employee access to information on exposure to toxic materials or harmful physical agents.

(e) A manual Management Information System was implemented in July, 1975, and converted to an automated system in July, 1977.

(f) The personnel operations of the Kentucky Department of Labor and the servicing merit system agency have been found to be in substantial conformity with the ''Standards for a Merit System of Personnel Administration'' by letter of the Secretary of Labor dated May 17, 1977. In addition, a Kentucky Department of Labor affirmative action plan to promote equal employment opportunity has been judged acceptable by the Regional Office of Personnel Management by letter dated February 12, 1979.

(g) Kentucky revised regulations governing the operation of the Kentucky Occupational Safety and Health Review Commission were promulgated in December, 1975.

(h) A revised Kentucky Compliance Manual was initially submitted in July, 1976, and subsequently amended in response to Federal comment to reflect changes in Federal procedures through December 20, 1976.

(i) By executive orders 74–374 and 77–573 dated May 15, 1974, and June 30, 1977, respectively, the Governor of Kentucky made the following changes in the organization of the Kentucky Occupational Safety and Health Program:

(1) All occupational health functions except laboratory services were transferred from Kentucky Department of Human Resources to the Kentucky Department of Labor.

(2) Responsibilities for coverage of employees of public utilities were transferred from the Kentucky Public Service Commission to the Kentucky Department of Labor.

(j) A Kentucky Public Employee plan has been adopted by the State.

(k) In accordance with § 1902.34 of this chapter, the Kentucky occupational safety and health plan received certification, effective February 8, 1980, as having completed all developmental steps specified in its plan as approved on July 31, 1973, on or before July 31, 1976. This certification attests to structural completion, but does not render judgment on adequacy of performance.

[41 FR 21774, May 28, 1976, as amended at 41 FR 34252, Aug. 13, 1976; 45 FR 8596, 8598, Feb. 8, 1980. Redesignated at 50 FR 24896, June 13, 1985]

§ 1952.233 Compliance staffing benchmarks.

Under the terms of the 1978 Court Order in *AFL-CIO* v. *Marshall* compliance staffing levels (benchmarks) necessary for a ''fully effective'' enforcement program were required to be established for each State operating an approved State plan. In September 1984 Kentucky, in conjunction with OSHA, completed a reassessment of the levels initially established in 1980 and proposed revised compliance staffing

benchmarks of 23 safety and 14 health compliance officers. After opportunity for public comment and service on the AFL-CIO, the Assistant Secretary approved these revised staffing requirements on June 13, 1985.

§ 1952.234 Final approval determination.

(a) In accordance with section 18(e) of the Act and procedures in 29 CFR part 1902, and after determination that the State met the ''fully effective'' compliance staffing benchmarks as revised in 1984 in response to a Court Order in *AFL-CIO* v. *Marshall* (CA 74–406), and was satisfactorily providing reports to OSHA through participation in the Federal-State Unified Management Information System, the Assistant Secretary evaluated actual operations under the Kentucky State plan for a period of at least one year following certification of completion of developmental steps (45 FR 8596). Based on the 18(e) Effectiveness Report for the period of October 1982 through March 1984, and after opportunity for public comment, the Assistant Secretary determined that in operation the State of Kentucky's occupational safety health program is at least as effective as the Federal program in providing safe and healthful employment and places of employment and meets the criteria for final State plan approval in section 18(e) of the Act and implementing regulations at 29 CFR part 1902. Accordingly, the Kentucky plan was granted final approval and concurrent Federal enforcement authority was relinquished under section 18(e) of the Act effective June 13, 1985.

(b) Except as otherwise noted, the plan which has received final approval covers all activities of employers and all places of employment in Kentucky. The plan does not cover private sector maritime employment; employment at Tennessee Valley Authority facilities; military bases; properties ceded to the U.S. Government; Federal government employers and employees; the U.S. Postal Service (USPS), including USPS employees, and contract employees and contractor-operated facilities engaged in USPS mail operations; the enforcement of the field sanitation standard, 29 CFR 1928.110, and the enforcement of the temporary labor camps standard, 29 CFR 1910.142, with respect to any agricultural establishment where employees are engaged in ''agricultural employment'' within the meaning of the Migrant and Seasonal Agricultural Worker Protection Act, 29 U.S.C. 1802(3), regardless of the number of employees, including employees engaged in hand packing of produce into containers, whether done on the ground, on a moving machine, or in a temporary packing shed, except that Kentucky retains enforcement responsibility over agricultural temporary labor camps for employees engaged in egg, poultry, or red meat production, or the post-harvest processing of agricultural or horticultural commodities.

(c) Kentucky is required to maintain a State program which is at least as effective as operations under the Federal program; to submit plan supplements in accordance with 29 CFR part 1953; to allocate sufficient safety and health enforcement staff to meet the benchmarks for State staffing established by the U.S. Department of Labor, or any revisions to those benchmarks; and, to furnish such reports in such form as the Assistant Secretary may from time to time require.

[50 FR 24896, June 13, 1985, as amended at 62 FR 2562, Jan. 17, 1997; 65 FR 36624, June 9, 2000]

§ 1952.235 Level of Federal enforcement.

(a) As a result of the Assistant Secretary's determination granting final approval to the Kentucky plan under section 18(e) of the Act, effective June 13, 1985, occupational safety and health standards which have been promulgated under section 6 of the Act do not apply with respect to issues covered under the Kentucky plan. This determination also relinquishes concurrent Federal OSHA authority to issue citations for violations of such standards under sections 5(a)(2) and 9 of the Act; to conduct inspections and investigations under section 8 (except those necessary to conduct evaluation of the plan under section 18(b) and other inspections, investigations, or proceedings necessary to carry out Federal responsibilities not specifically preempted by section 18(e)); to conduct

enforcement proceedings in contested cases under section 10; to institute proceedings to correct imminent dangers under section 13; and to propose civil penalties or initiate criminal proceedings for violations of the Federal Act under section 17. The Assistant Secretary retains jurisdiction under the above provisions in any proceeding commenced under section 9 or 10 before the effective date of the 18(e) determination.

(b)(1) In accordance with section 18(e), final approval relinquishes Federal OSHA authority only with regard to occupational safety and health issues covered by the Kentucky plan. OSHA retains full authority over issues which are not subject to State enforcement under the plan. Thus, Federal OSHA retains its authority relative to safety and health in private sector maritime activities and will continue to enforce all provisions of the Act, rules or orders, and all Federal standards, current or future, specifically directed to maritime employment (29 CFR Part 1915, shipyard employment; Part 1917, marine terminals; Part 1918, longshoring; Part 1919, gear certification) as well as provisions of general industry and construction standards (29 CFR Parts 1910 and 1926) appropriate to hazards found in these employments; employment at Tennessee Valley Authority facilities and on all military bases, as well as any other properties ceded to the U.S. Government. Federal jurisdiction is retained and exercised by the Employment Standards Administration, U.S. Department of Labor, (Secretary's Order 5–96, dated December 27, 1996) with respect to the field sanitation standard, 29 CFR 1928.110, and the enforcement of the temporary labor camps standard, 29 CFR 1910.142, in agriculture, as described in § 1952.234(b). Federal jurisdiction is also retained with respect to Federal government employers and employees; and the U.S. Postal Service (USPS), including USPS employees, and contract employees and contractor-operated facilities engaged in USPS mail operations.

(2) In addition, any hazard, industry, geographical area, operation or facility over which the State is unable to effectively exercise jurisdiction for reasons not related to the required performance or structure of the plan shall be deemed to be an issue not covered by the finally approved plan, and shall be subject to Federal enforcement. Where enforcement jurisdiction is shared between Federal and State authorities for a particular area, project, or facility, in the interest of administrative practicability, Federal jurisdiction may be assumed over the entire project or facility. In either of the two aforementioned circumstances, Federal enforcement may be exercised immediately upon agreement between Federal and State OSHA.

(c) Federal authority under provisions of the Act not listed in section 18(e) is unaffected by final approval of the plan. Thus, for example, the Assistant Secretary retains his authority under section 11(c) of the Act with regard to complaints alleging discrimination against employees because of the exercise of any right afforded to the employee by the Act, although such complaints may be referred to the State for investigation. The Assistant Secretary also retains his authority under section 6 of the Act to promulgate, modify or revoke occupational safety and health standards which address the working conditions of all employees, including those in States which have received an affirmative 18(e) determination, although such standards may not be Federally applied. In the event that the State's 18(e) status is subsequently withdrawn and Federal authority reinstated, all Federal standards, including any standards promulgated or modified during the 18(e) period, would be Federally enforceable in that State.

(d) As required by section 18(f) of the Act, OSHA will continue to monitor the operations of the Kentucky State program to assure that the provisions of the State plan are substantially complied with and that the program remains at least as effective as the Federal program. Failure by the State to comply with its obligations may result in the revocation of the final determination under section 18(e), resumption of Federal enforcement, and/or

proceedings for withdrawal of plan approval.

[50 FR 24896, June 13, 1985, as amended at 62 FR 2562, Jan. 17, 1997; 65 FR 36624, June 9, 2000]

§ 1952.236 Where the plan may be inspected.

A copy of the principal documents comprising the plan may be inspected and copied during normal business hours at the following locations:

Office of State Programs, Occupational Safety and Health Administration, U.S. Department of Labor, 200 Constitution Avenue NW, Room N3700, Washington, DC 20210;

Office of the Regional Administrator, Occupational Safety and Health Administration, U.S. Department of Labor, Atlanta Federal Center, 61 Forsyth Street, SW., Room 6T50, Atlanta, Georgia 30303; and

Office of the Secretary, Kentucky Labor Cabinet, 1047 U.S. Highway 127 South, Suite 4, Frankfort, Kentucky 40601.

[65 FR 36625, June 9, 2000]

§ 1952.237 Changes to approved plans.

(a) *Legislation*. (1) On March 29, 1994, the Assistant Secretary approved Kentucky's revised statutory penalty levels which are the same as the revised Federal penalty levels contained in section 17 of the Act as amended on November 5, 1990.

(2) [Reserved]

(b) *The Voluntary Protection Program*. On October 24, 1996, the Assistant Secretary approved Kentucky's plan supplement, which is generally identical to the Federal Voluntary Protection Program, with the exception that the State's VPP is limited to the ''Star'' level participation for general industry firms.

(c) *Temporary labor camps/field sanitation*. Effective February 3, 1997, the Assistant Secretary approved Kentucky's plan amendment, dated July 29, 1996, relinquishing coverage for the issues of field sanitation (29 CFR 1928.110) and temporary labor camps (29 CFR 1910.142) in agriculture (except for agricultural temporary labor camps associated with egg, poultry or red meat production, or the post-harvest processing of agricultural or horticultural commodities.) The Employment Standards Administration, U.S. Department of Labor, has assumed responsibility for enforcement of these Federal OSHA standards in agriculture in Kentucky pursuant to Secretary of Labor's Order 5–96, dated December 27, 1996.

[59 FR 14556, Mar. 29, 1994, as amended at 61 FR 55099, Oct. 24, 1996; 62 FR 2563, Jan. 17, 1997]

Subpart R—Alaska

§ 1952.240 Description of the plan as initially approved.

(a) The Department of Labor is the State agency designated by the Governor to administer the plan throughout the State. The plan defines the covered occupational safety and health issues as defined by the Secretary of Labor in § 1902.2(c)(1) of this chapter under four major codes for general safety, industrial housing, electrical hazards, and occupational health and environmental controls. The plan also includes vertical special industry codes for construction, wood products, petroleum, and fishing. Appendix G of the plan contains a time-table for adoption of the standards beginning with the effective date of the grant approved under section 23(g) of the Act. The timetable requires from 6 to 36 months for completion of the standard-setting process with most of the standards to be adopted within 6 months of the effective date of the grant.

(b)(1) The plan included draft legislation which has been passed by the State legislature and signed by the Governor amending chapter 18 of the Alaska Statutes. Under the legislation, effective July 24, 1973, the Department of Labor has full authority to enforce and administer laws respecting safety and health of employees in all workplaces of the State, including coverage of public employees, with the exceptions of maritime workers in the area of exclusive Federal jurisdiction; employees of the United States; employees protected by State agencies under the Atomic Energy Act of 1954, (42 U.S.C. 2021); and employees whose working conditions are regulated by Federal agencies other than the U.S. Department of Labor under the provisions of section 4(b)(1) of the Occupational Safety and Health Act of 1970. (84 Stat. 1592, 29 U.S.C. 653(b)(1)).

(2) The legislation brings the plan into conformity with the requirements of part 1902 of this chapter in areas such as procedures for granting or denying permanent and temporary variances to standards by the Commissioner; protection of employees from hazards; promulgation of standards by the Commissioner prescribing requirements ''at least as effective'' as the requirements for Federal Standards including medical examinations and monitoring and measuring of hazards; imminent danger abatement by administrative order and court injunction; protection of employees against discharge or discrimination in terms or conditions of employment by filing complaints with the Commissioner who will seek court action through the State Attorney General; and adequate safeguards to protect trade secrets.

(3) The legislation provides for inspections, including inspections in response to complaints; gives employers and employee representatives an opportunity to accompany inspectors in order to aid inspections and provides for payment to employees for time spent in aiding an inspection; notification of employees or their representatives when no compliance action is taken as a result of an alleged violation, including informal review; notification of employees of their protections and obligations through legislative requirements on posting; provision for prompt notice to employers and employees of alleged violations of standards, and abatement requirements, through the issuance and posting of citations; a system of sanctions against employers for violations of standards; employer right of review to the Occupational Safety and Health Review Board; and employee participation in the review procedure with compensation for time spent by the employee.

(c) Included in the plan is a statement of legal opinion that the law, which was supported by the Governor in accordance with the requirements of part 1902 of this chapter, is consistent with the Constitution and laws of Alaska. The plan sets out goals and provides a timetable for bringing it into full conformity with part 1902 of this chapter at the end of three years after commencement of operations under the plan. Personnel will be employed under the existing State merit system and the voluntary compliance program for on-site consultation meets the conditions set forth in the Washington decision (38 FR 2421). The plan also includes the State Administrative Procedure Act which authorizes the Commissioner to promulgate emergency temporary standards and issue rules and regulations necessary for the implementation of the safety and health law.

(d) The plan includes the following documents as of the date of approval:

(1) The plan document and appendices A through V.

(2) Alaska legislation as enacted amending chapter 18 of the Alaska Statutes.

(3) Letters from the Commissioner of Labor dated May 25, 1973, June 15, 1973, and July 10, 1973.

[38 FR 21630, Aug. 10, 1973, as amended at 49 FR 38261, Sept. 28, 1984]

§ 1952.241 Developmental schedule.

The Alaska plan is developmental. The Schedule of developmental steps (described in the plan as revised in letters dated September 17, 1975, February 10, 1976, and April 15, 1976, from Edmond N. Orbeck, Commissioner, Alaska Department of Labor, to James Lake, Regional Administrator for Occupational Safety and Health) follows:

(a) Promulgation of occupational safety and health standards, as effective as corresponding Federal standards promulgated under chapter XVII of title 29, Code of Federal Regulations by September 1976.

(b) A Compliance Operations Manual for the guidance of compliance personnel will be developed and printed by February 1, 1974.

(c) A Management Information System (MIS) will be developed by October 1, 1974.

(d) An interim training schedule (appendix M) will be initiated by April 1, 1974. An extended training plan of substantially permanent form will be developed and adopted by October 1, 1976.

(e) Complete hiring of industrial health staff by October 1, 1976.

(f) Provide for an Industrial Health laboratory capacity by October 1, 1976.

(g) Adoption of the following regulations by January 30, 1975:

(1) Recordkeeping and Reporting;

(2) Variances;

(3) Exceptions to the prohibitions against advance notice (such exceptions to be no broader than those contained in 29 CFR part 1903);

(4) Clarification of the appropriate parties for employers to notify in order to file a notice of contest;

(5) A definition of imminent danger that mirrors the Federal definition;

(6) A regulation to allow affected employees to participate as parties in hearings.

[41 FR 56315, Dec. 28, 1976. Redesignated at 49 FR 38261, Sept. 28, 1984]

§ 1952.242 Completed developmental steps.

(a) In accordance with § 1952.243(d) Alaska completed its interim training program by April 1, 1974, and has developed and adopted an extended training program by October 1, 1976 (41 FR 36206).

(b) In accordance with § 1952.243(c) Alaska has developed and implemented a manual Management Information System by October 1, 1974 (41 FR 36206).

(c) In accordance with the requirements of § 1952.10 the Alaska Safety and Health Poster for private and public employees was approved by the Assistant Secretary on September 28, 1976 (41 FR 43405).

(d) In accordance with § 1952.243(e) Alaska has completed hiring of its industrial health staff by October 1, 1976 (41 FR 52556).

(e) In accordance with § 1952.243(f) Alaska has provided for an Industrial Health Laboratory capacity by October 1, 1976 (41 FR 36206).

(f) In accordance with § 1952.243(g) Alaska has adopted regulations covering inspections, citations, and proposed penalties, Alaska Occupational Safety and Health Review Board procedures; recording and reporting occupational injuries and illnesses; variances; and consulting and training which were approved by the Assistant Secretary on August 2, 1977.

(g) In accordance with § 1952.243(b) Alaska has developed a Compliance Manual which is modeled after the Federal Field Operations Manual and was approved by the Assistant Secretary on August 2, 1977.

(h) In accordance with § 1902.34 of this chapter, the Alaska occupational safety and health plan was certified, effective September 9, 1977, as having completed on or before October 1, 1976, all developmental steps specified in the plan as approved on July 31, 1973.

[41 FR 56315, Dec. 28, 1976, as amended at 42 FR 40196, Aug. 9, 1977; 42 FR 45907, Sept. 13, 1977. Redesignated at 49 FR 38261, Sept. 28, 1984]

§ 1952.243 Final approval determination.

(a) In accordance with section 18(e) of the Act and procedures in 29 CFR part 1902, and after a determination that the State met the ''fully effective'' compliance staffing benchmarks as established in 1980 in response to a Court Order in *AFL-CIO* v. *Marshall*, (CA 74–406), and was satisfactorily providing reports to OSHA through participation in the Federal-State Unified Management Information, System, the Assistant Secretary evaluated actual operations under the Alaska State plan for a period of at least one year following certification of completion of developmental steps (Sept. 9, 1977, 42 FR 54905). Based on the Evaluation Report for FY 1983 and available FY 1984 data, and after opportunity for public comment and an informal public hearing held on June 7, 1984 in Anchorage, Alaska, the Assistant Secretary determined that in actual operations, the State of Alaska occupational safety and health program is at least as effective as the Federal program in providing safe and healthful employment and places of employment and meets the criteria for final States plan approval in section 18(e) of the Act and implementing regulations at 29 CFR part 1902. Accordingly, the Alaska plan was granted final approval and concurrent Federal enforcement authority was relinquised under section 18(e) of the Act effective September 26, 1984.

(b) Except as otherwise noted, the plan which has received final approval covers all activities of employers and all places of employment in Alaska. The plan does not cover:

(1) Private sector maritime employment;

(2) Worksites located on the navigable waters, including artificial islands;

(3) Native health care facilities that are Federally owned and contractor operated, including those owned by the U.S. Department of the Interior—Indian Health Service, the U.S. Department of Defense, or the U.S. Department of Commerce—National Oceanic and Atmospheric Administration, and operated by Tribal organizations under contract with the Indian Health Service;

(4) Operations of private sector employers within the Metlakatla Indian Community on the Annette Islands;

(5) Operations of private sector employers within Denali (Mount McKinley) National Park;

(6) Operations of private contractors at Cape Lisburne Long Range Missile Base, Point Lay Short Range Missile Base, Eareckson Air Station on Shemya Island, Fort Greeley Missile Defense in Delta Junction, the U.S. Coast Guard Integrated Support Commands in Kodiak and Ketchikan, the U.S. Coast Guard Air Station in Sitka, and the U.S. Coast Guard 17th District Command in Juneau;

(7) Federal government employers and employees;

(8) The U.S. Postal Service (USPS), including USPS employees, and contract employees and contractor-operated facilities engaged in USPS mail operations; or

(9) The enforcement of the field sanitation standard, 29 CFR 1928.110, and the enforcement of the temporary labor camps standard, 29 CFR 1910.142, with respect to any agricultural establishment where employees are engaged in ''agricultural employment'' within the meaning of the Migrant and Seasonal Agricultural Worker Protection Act, 29 U.S.C. 1802(3), regardless of the number of employees, including employees engaged in hand packing of produce into containers, whether done on the ground, on a moving machine, or in a temporary packing shed, except that Alaska retains enforcement responsibility over agricultural temporary labor camps for employees engaged in egg, poultry, or red meat production, or the post-harvest processing of agricultural or horticultural commodities.

(c) Alaska is required: To maintain a State program which is at least as effective as operations under the Federal program; to submit plan supplements in accordance with 29 CFR part 1953; to allocate sufficient safety and health enforcement staff to meet the benchmarks for State staffing established by the U.S. Department of Labor, or any revisions to those benchmarks; and, to furnish such reports in such form as the Assistant Secretary may from time to time require.

[49 FR 38261, Sept. 28, 1984, as amended at 54 FR 115, Jan. 4, 1989; 62 FR 2563, Jan. 17, 1997; 65 FR 36625, June 9, 2000; 69 FR 20827, Apr. 19, 2004]

§ 1952.244 Level of Federal enforcement.

(a) As a result of the Assistant Secretary's determination granting final approval to the Alaska plan under section 18(e) of the Act, effective September 26, 1984, occupational safety and health standards which have been promulgated under section 6 of the Act do not apply with respect to issues covered under the Alaska plan. This determination also relinquishes concurrent Federal OSHA authority to issue citations for violation of such standards under sections 5(a)(2) and 9 of the Act; to conduct inspections and investigations under section 8 (except those necessary to conduct evaluation of the plan under section 18(b) and other inspections, investigations, or proceedings necessary to carry out Federal responsibilities not specifically preempted by section 18(e)); to conduct enforcement proceedings in contested cases under section 10; to institute proceedings to correct imminent dangers under section 13; and to propose civil penalties or inititate criminal proceedings for violations of the Federal Act under section 17. The Assistant Secretary may retain jurisdiction under the above provisions in any proceeding commenced under section 9 or 10 before the effective date of the 18(e) determination.

(b) In accordance with section 18(e), final approval relinquishes Federal OSHA authority only with regard to occupational safety and health issues

covered by the Alaska plan. OSHA retains full authority over issues which are not subject to State enforcement under the plan.

(1) Federal OSHA retains its authority relative to safety and health in private sector maritime activities and will continue to enforce all provisions of the Act, rules or orders, and all Federal standards, current or future, specifically directed to maritime employment (29 CFR Part 1915, shipyard employment; Part 1917, marine terminals; Part 1918, longshoring; Part 1919, gear certification) as well as provisions of general industry and construction standards (29 CFR Parts 1910 and 1926) appropriate to hazards found in these employments.

(2) Federal jurisdiction will be retained over marine-related private sector employment at worksites on the navigable waters, such as floating seafood processing plants, marine construction, employments on artificial islands, and diving operations in accordance with section 4(b)(1) of the Act.

(3) Federal jurisdiction is also retained and exercised by the Employment Standards Administration, U.S. Department of Labor (Secretary's Order 5–96, December 27, 1996) with respect to the field sanitation standard, 29 CFR 1928.110, and the enforcement of the temporary labor camps standard, 29 CFR 1910.142, in agriculture, as described in § 1952.243(b).

(4) Federal jurisdiction is also retained for Native health care facilities that are Federally owned and contractor operated, including those owned by the U.S. Department of the Interior, Indian Health Service; the U.S. Department of Defense; or the U.S. Department of Commerce, National Oceanic and Atmospheric Administration; and operated by Tribal organizations under contract with the Indian Health Service. However, the State retains jurisdiction over construction and contract maintenance activities at these facilities with the exception of the Metlakatla Indian Community, Annette Island Service Unit, which is entirely under Federal jurisdiction. (The State also retains jurisdiction over Native health care facilities that are leased or owned by Tribal organizations, except for the Metlakatla Indian Community.)

(5) Federal jurisdiction is also retained with regard to the operations of private contractors at Cape Lisburne Long Range Missile Base, Point Lay Short Range Missile Base, Eareckson Air Station on Shemya Island, Fort Greeley Missile Defense in Delta Junction, the U.S. Coast Guard Integrated Support Commands in Kodiak and Ketchikan, the U.S. Coast Guard Air Station in Sitka, and the U.S. Coast Guard 17th District Command in Juneau.

(6) Federal jurisdiction is also retained for private sector worksites located within the Annette Islands Reserve of the Metlakatla Indian Community, for private sector worksites located within the Denali (Mount McKinley) National Park, for Federal government employers, and for the U.S. Portal Service (USPS), including USPS employees, and contract employees and contractor-operated facilities engaged in USPS mail operations.

(c) Federal authority under provisions of the Act not listed in section 18(e) is unaffected by final approval of the plan. Thus, for example, the Assistant Secretary retains his authority under section 11(c) of the Act with regard to complaints alleging discrimination against employees because of the exercise of any right afforded to the employee by the Act, although such complaints may be referred to the State for investigation. The Assistant Secretary also retains his authority under section 6 of the Act to promulgate, modify or revoke occupational safety and health standards which address the working conditions of all employees, including those in States which have received an affirmative 18(e) determination, although such standards may not be Federally applied. In the event that the State's 18(e) status is subsequently withdrawn and Federal authority reinstated, all Federal standards, including any standards promulgated or modified during the 18(e) period, would be Federally enforceable in that State.

(d) As required by section 18(f) of the Act, OSHA will continue to monitor the operations of the Alaska State program to assure that the provisions of

the State plan are substantially complied with and that the program remains at least as effective as the Federal program. Failure by the State to comply with its obligations may result in the revocation of the final determination under section 18(e), resumption of Federal enforcement, and/or proceedings for withdrawal of plan approval.

[49 FR 38261, Sept. 28, 1984, as amended at 54 FR 115, Jan. 4, 1989; 62 FR 2563, Jan. 17, 1997; 65 FR 36625, June 9, 2000; 69 FR 20827, Apr. 19, 2004]

§ 1952.245 Where the plan may be inspected.

A copy of the principal documents comprising the plan may be inspected and copied during normal business hours at the following locations:

Office of State Programs, Occupational Safety and Health Administration, U.S. Department of Labor, 200 Constitution Avenue NW, Room N3700, Washington, DC 20210;

Office of the Regional Administrator, Occupational Safety and Health Administration, U.S. Department of Labor, Suite 715, 1111 Third Avenue, Seattle, Washington, 98101–3212; and

Office of the Commissioner, Alaska Department of Labor, 1111 W. 8th Street, Room 306, P.O. Box 24119, Juneau, Alaska 99802–1149.

[65 FR 36625, June 9, 2000]

§ 1952.246 Changes to approved plans.

(a) In accordance with part 1953 of this chapter, the following Alaska plan changes were approved by the Assistant Secretary:

(1) The State submitted a revised field operations manual patterned after and responsive to modifications to the Federal field operations manual in effect February 11, 1985 which superseded its earlier approved manual. The Assistant Secretary approved the manual on October 24, 1985.

(2) The State submitted an industrial hygiene technical manual patterned after and responsive to modifications to the Federal manual in effect October 29, 1984. The Assistant Secretary approved the manual on October 24, 1985.

(3) The State submitted an inspection scheduling system patterned after and responsive to the Federal system in effect October 29, 1984. The Assistant Secretary approved the supplement on October 24, 1985.

(4) The State submitted an amendment to its legislation and field procedures which provided for issuance of an onsite notice of violations which serves to require correction of other than serious violations in lieu of a citation. The Assistant Secretary approved these changes on October 24, 1985.

(5) The State submitted several changes on its administrative and review rules concerning personal sampling, ex parte warrants, petition to modify abatement dates, withdrawal of contest, recordkeeping penalties and exemptions, exemption from scheduled inspections after consultation, renaming the division of the State agency directly enforcing standards, and the address for filing contests. The Assistant Secretary approved these changes on October 24, 1985.

(b) *Legislation*. (1) On March 29, 1994, the Assistant Secretary approved Alaska's revised statutory penalty levels which are the same as the revised Federal penalty levels contained in section 17 of the Act as amended on November 5, 1990.

(2) [Reserved]

(c) *Temporary labor camps/field sanitation*. Effective February 3, 1997, the Assistant Secretary approved Alaska's plan amendment, dated October 1, 1996, relinquishing coverage for the issues of field sanitation (29 CFR 1928.110) and temporary labor camps (29 CFR 1910.142) in agriculture (except for agricultural temporary labor camps associated with egg, poultry or red meat production, or the post-harvest processing of agricultural or horticultural commodities.) The Employment Standards Administration, U.S. Department of Labor, has assumed responsibility for enforcement of these Federal OSHA standards in agriculture in Alaska pursuant to Secretary of Labor's Order 5–96, dated December 27, 1996.

[50 FR 43133, Oct. 24, 1985, as amended at 59 FR 14556, Mar. 29, 1994; 59 FR 50793, Oct. 5, 1994; 62 FR 2563, Jan. 17, 1997]

Subpart S [Reserved]

Subpart T—Michigan

§ 1952.260 Description of the plan as initially approved.

(a) The plan identifies the Michigan Department of Labor and the Department of Public Health as the agencies to be responsible for administering the plan throughout the State. The Department of Labor will be responsible for promulgating and enforcing general safety and construction safety standards while the Department of Public Health will be responsible for the promulgation and enforcement of occupational health standards. Two independent commissions within the Department of Labor, the Construction Safety Commission and the Occupational Safety Standards Commission will promulgate general and construction safety standards while the Director of Public Health will promulgate health standards. Applications for variances to standards will be handled by the two Departments. Administrative adjudications will be the responsibility of the Occupational Safety Compliance and Appeals Board, the Construction Safety Compliance and Appeals Board, and the Occupational Health Review Commission.

(b) The State program is expected to extend its protection to all employees in the State (including those employed by it and its political subdivisions) except those employed by Federal agencies, maritime workers, household domestic workers, and mine workers.

(c) The Plan provides that the State agencies will have full authority to administer and to enforce all laws, rules and orders protecting employee safety and health in all places of employment in the State. It also proposes procedures for providing prompt and effective standards for the protection of employees against new and unforseen hazards, and for furnishing information to employees on hazards, precautions, symptoms, and emergency treatment, and procedures for variances and the protection of employees from hazards. It further, provides employer and employee representatives an opportunity to accompany inspectors and call attention to possible violations before, during and after inspections, protection of employees against discharge or discrimination in terms and conditions of employment, notice to employees or their representatives when no compliance action is taken upon complaints, including informal review, notice to employees of their protections and obligations, adequate safeguards to protect trade secrets, prompt notice to employers and employees of alleged violations of standards and abatement requirements, effective remedies against employers, and the right to review alleged violations, abatement periods, and proposed penalties with opportunity for employee participation in the review proceeding, procedures for prompt restraint or elimination of imminent danger conditions, provision for the issuance of cease operation orders in cases where employers fail to comply with final orders for abatement, and provision for inspections in response to complaints.

(d) The State intends to promulgate standards for all of the issues contained in 29 CFR parts 1910 and 1926 with the exception of Ship Repairing (§ 1910.13), Shipbuilding (§ 1910.14), Shipbreaking (§ 1910.15) and Longshoring (§ 1910.16), which standards are to be as effective as Federal standards. Michigan had originally not intended to promulgate a standard covering cooperage machinery comparable to 29 CFR 1910.214, but it has now provided assurances that it will promulgate such standard if the hazards covered by the Federal cooperage standard are found to exist in Michigan. The State has already promulgated standards as effective as subparts F, K, M, Q and S and the remaining subparts are to be covered by State standards which are to be promulgated by June 1975.

(e) The Plan includes a statement of the Governor's support for the proposed legislation and a statement of legal opinion that it will meet the requirements of the Occupational Safety and Health Act of 1970, and is consistent with the Constitution and laws of Michigan. The Plan sets out goals and provides a timetable for bringing it into full conformity with part 1902 of this title upon enactment of the proposed legislation by the State legislature. A merit system of personnel administration will be used. In addition,

health and safety education and training programs are to be carried on for the benefit of employers and employees. The Department of Labor will also be conducting a Safety Director Program wherein companies which are found to have high injury incident rates will be assisted in developing safety programs.

[38 FR 27391, Oct. 3, 1973, as amended at 60 FR 20193, Apr. 25, 1995]

§ 1952.261 Developmental schedule.

(a) Enactment of the Michigan Occupational Safety and Health Act by December 1973.

(b) Promulgation of occupational safety and health standards as effective and comprehensive as those set forth in chapter XVII of this title 29 of the Code of Federal Regulations by June 1975.

(c) Completion of the Michigan Compliance Manual within one year after passage of the state legislation.

(d) Promulgation of regulations similar to parts 1903, 1905, and 2200 of this title within one year after passage of the state legislation.

(e) Promulgation of 29 CFR part 1904 as a State regulation, including any amendments to part 1904, within one (1) year following passage of the proposed legislation.

(f) Development of a new coordination agreement between the Michigan Departments of Labor and Public Health within three months following the passage of the proposed state legislation.

(g) Implementation of the state's public employee program within one year following passage of the proposed legislation.

(h) Within three years of plan approval all developmental steps will be fully implemented.

This certification attests to structural completion, but does not render judgment on adequacy of performance.

[38 FR 27391, Oct. 3, 1973, as amended at 46 FR 3865, Jan. 16, 1981. Redesignated and amended at 60 FR 20193, Apr. 25, 1995]

§ 1952.262 Completion of developmental steps and certification.

(a) In accordance with § 1952.263(a), the Michigan Occupational Safety and Health Act was enacted on June 18, 1974 and is effective January 1, 1975. This legislation, Act 154 of Michigan Public Acts of 1974, was submitted to the Assistant Secretary on June 19, 1974 and approved on February 21, 1975.

(b) In accordance with § 1952.263(f) the Michigan Department of Labor and the Michigan Department of Public Health have entered into a new interagency agreement on September 23, 1974. The agreement was submitted to the Assistant Secretary on October 28, 1974, and approved on February 21, 1975.

(c) In accordance with the requirements of § 1952.10, the Michigan State poster was approved by the Assistant Secretary on September 22, 1975.

(d) In accordance with § 1952.263(g) Michigan's public employee program was implemented with an effective date of July 1, 1975, and approved by the Assistant Secretary on October 17, 1977.

(e) In accordance with § 1952.263(d), Procedural Rules for the granting of Variances, Regulations for Inspections and Investigations, Citations, and Proposed Penalties and Procedural Rules for the Board of Health and Safety Compliance and Appeals, were approved by the Assistant Secretary on January 12, 1981.

(f) In accordance with prior commitments, the Michigan Occupational Safety and Health Act as amended by Act 149 of the Public Acts of 1979, was approved by the Assistant Secretary on January 12, 1981.

(g) In accordance with § 1952.263(c), Manuals for Compliance Operations of the Michigan Department of Labor and Public Health were approved by the Assistant Secretary on January 13, 1981.

(h) In accordance with § 1952.263(e), Rules for Recording and Reporting of Occupational Injuries and Illnesses, were approved by the Assistant Secretary on January 13, 1981.

(i) In accordance with § 1902.34 of this chapter, the Michigan occupational safety and health plan was certified effective January 13, 1981 as having completed all developmental steps specified in the plan as approved on September 24, 1973, on or before September 24, 1976.

[40 FR 8556, Feb. 28, 1975, as amended at 40 FR 44132, Sept. 25, 1975; 42 FR 57123, Nov. 1, 1977; 46 FR 3862, 3863, Jan. 16, 1981. Redesignated and amended at 60 FR 20193, Apr. 25, 1995]

§ 1952.263 Compliance staffing benchmarks.

Under the terms of the 1978 Court Order in *AFL-CIO* v. *Marshall*, compliance staffing levels (''benchmarks'') necessary for a ''fully effective'' enforcement program were required for each State operating an approved State plan. In 1992, Michigan completed, in conjunction with OSHA, a reassessment of the levels initially established in 1980 and proposed revised benchmarks of 56 safety and 45 health compliance officers. After opportunity for public comment and service on the AFL-CIO, the Assistant Secretary approved these revised staffing requirements on April 20, 1995.

[60 FR 20193, Apr. 25, 1995]

§ 1952.264 [Reserved]

§ 1952.265 Level of Federal enforcement.

Pursuant to §§1902.20(b)(1)(iii) and 1954.3 of this chapter under which an agreement has been entered into with Michigan, effective January 6, 1977, and based on a determination that Michigan is operational in the issues covered by the Michigan occupational safety and health plan, discretionary Federal enforcement activity under section 18(e) of the Act (29 U.S.C. 667(e)) will not be initiated with regard to Federal occupational safety and health standards in issues covered under 29 CFR Parts 1910 and 1926, except as provided in this section. The U.S. Department of Labor will continue to exercise authority, among other things, with regard to: Complaints filed with the U.S. Department of Labor about violations of the discrimination provisions of section 11(c) of the Act (29 U.S.C. 660(c)); Federal standards promulgated subsequent to the agreement where necessary to protect employees, as in the case of temporary emergency standards promulgated under section 6(c) of the Act (29 U.S.C. 655(c)), in the issues covered under the plan and the agreement until such time as Michigan shall have adopted equivalent standards in accordance with subpart C of 29 CFR Part 1953; private sector maritime activities and will continue to enforce all provisions of the Act, rules or orders, and all Federal standards, current or future, specifically directed to maritime employment (29 CFR Part 1915, shipyard employment; Part 1917, marine terminals; Part 1918, longshoring; Part 1919, gear certification) as well as provisions of general industry and construction standards (29 CFR Parts 1910 and 1926) appropriate to hazards found in these employments; which issues have been specifically excluded from coverage under the Michigan plan; and investigations and inspections for the purpose of the evaluation of the Michigan plan under sections 18(e) and (f) of the Act (29 U.S.C. 667(e) and (f)). Federal OSHA will also retain authority for coverage of Federal government employers and employees; and of the U.S. Postal Service (USPS), including USPS employees, and contract employees and contractor-operated facilities engaged in USPS mail operations; and of employers who own or operate businesses located within the boundaries of Indian reservations who are enrolled members of Indian tribes. (Non-Indian employers within the reservations and Indian employers outside the territorial boundaries of Indian reservations remain subject to Michigan jurisdiction). The OSHA Regional Administrator will make a prompt recommendation for the resumption of the exercise of Federal enforcement authority under section 18(e) of the Act (29 U.S.C. 667(e)) whenever, and to the degree, necessary to assure occupational safety and health protection to employees in Michigan.

[65 FR 36626, June 9, 2000, as amended at 76 FR 63191, Oct. 12, 2011]

§ 1952.266 Where the plan may be inspected.

A copy of the principal documents comprising the plan may be inspected and copied during normal business hours at the following locations:

Office of State Programs, Occupational Safety and Health Administration, U.S. Department of Labor, 200 Constitution Avenue, NW, Room N3700, Washington, DC 20210;

Office of the Regional Administrator, Occupational Safety and Health Administration, U.S. Department of Labor, 230 S. Dearborn Street, 32nd Floor, Room 3244, Chicago, Illinois 60604;

Office of the Director, Michigan Department of Consumer and Industry Services, 4th

Floor, Law Building, 525 West Ottawa Street, Lansing, Michigan 48933 (Mailing address: P.O. Box 30004, Lansing, Michigan 48909).

[65 FR 36626, June 9, 2000]

§ 1952.267 Changes to approved plans.

(a) *Legislation*. (1) On March 29, 1994, the Assistant Secretary approved Michigan's revised statutory penalty levels which are the same as the revised Federal penalty levels contained in section 17 of the Act as amended on November 5, 1990.

(2) [Reserved]

(b) [Reserved]

[59 FR 14556, Mar. 29, 1994. Redesignated at 60 FR 20193, Apr. 25, 1995]

Subpart U—Vermont

SOURCE: 38 FR 28659, Oct. 16, 1973, unless otherwise noted.

§ 1952.270 Description of the plan.

(a) The State's program will be administered and enforced by the Department of Labor and Industry. Safety standards are to be promulgated by the Commissioner of Labor and Industry while the Secretary of the Agency of Human Services is to promulgate health standards. The Division of Industrial Hygiene, within the Department of Labor and Industry, will then have the responsibility of inspecting workplaces for violations of health standards. However, enforcement of the Vermont Occupational Safety and Health Act, including the issuance of citations for all violations, rests with the Department of Labor and Industry. Administrative adjudications will be the responsibility of an independent State Occupational Safety and Health Review Board.

(b) The State program will protect all employees within the state including those employed by the State and its political subdivisions. Public employees are to be granted the same protections as are afforded employees in the private sector. Specific administrative procedures for implementing the plan within the State agencies are to be drafted by the Vermont Agency of Administration.

(c) Vermont has adopted all Federal standards promulgated before December 31, 1972. Future permanent Federal standards will be adopted by the state within one year after promulgation by the Secretary of Labor.

(d) The State enabling legislation became law on July 1, 1972. The Act sets forth the general authority and scope for implementing the plan. The plan also contains proposed amendments to the Act which are designed to bring the legislation into full conformity with section 18(c) of the Federal Act and part 1902. The State has also adopted regulations patterned after 29 CFR parts 1903, 1904 and 1905.

(e) The Vermont Act and the regulations drafted pursuant to it provide procedures for prompt and effective standards-setting for the protection of employees against new and unforeseen hazards and for furnishing information to employees on hazards, precautions, symptoms, and emergency treatment; variances; the giving to employer and employee representatives an opportunity to accompany inspectors and to call attention to possible violations before, during, and after inspections; the protection of employees against discharge or discrimination in terms or conditions of employments; notice to employees or their representatives when no compliance action is taken upon complaints, including informal review; notice to employees of their protections and obligations; adequate safeguards to protect trade secrets; prompt notice to employers and employees of alleged violations of standards and abatement requirements; effective sanctions against employers; the right to review alleged violations, abatement periods, and proposed penalties with the opportunity for employee participation in the review proceedings; prompt restraint or elimination of imminent danger conditions; and the development of a program to encourage voluntary compliance by employers and employees.

(f) The plan includes a statement of the Governor's support of it and of the proposed amendments to its legislation. It sets out goals and provides a timetable for bringing the plan into

full conformity with part 1902. Personnel hired under the state's merit system will carry out the program.

§ 1952.271 Where the plan may be inspected.

A copy of the principal documents comprising the plan may be inspected and copied during normal business hours at the following locations:

Office of State Programs, Occupational Safety and Health Administration, U.S. Department of Labor, 200 Constitution Avenue, NW, Room N3700, Washington, DC 20210;

Office of the Regional Administrator, Occupational Safety and Health Administration, U.S. Department of Labor, John F. Kennedy Federal Building, Room E–340, Boston, Massachusetts 02203; and

Office of the Commissioner, Vermont Department of Labor and Industry, National Life Building-Drawer 20, 120 State Street, Montpelier, Vermont 05620–3401.

[65 FR 36626, June 9, 2000]

§ 1952.272 Level of Federal enforcement.

Pursuant to §§1902.20(b)(1)(iii) and 1954.3 of this chapter under which an agreement has been entered into with Vermont, effective February 19, 1975, and based on a determination that Vermont is operational in issues covered by the Vermont occupational safety and health plan, discretionary Federal enforcement authority under section 18(e) of the Act (29 U.S.C. 667(e)) will not be initiated with regard to Federal occupational safety and health standards in issues covered under 29 CFR Parts 1910 and 1926, except as provided in this section. The U.S. Department of Labor will continue to exercise authority, among other things, with regard to: Complaints filed with the U.S. Department of Labor about violations of the discrimination provisions of section 11(c) of the Act (29 U.S.C. 660(c)); federal standards promulgated subsequent to the agreement where necessary to protect employees, as in the case of temporary emergency standards promulgated under section 6(c) of the Act (29 U.S.C. 665(c)), in the issues covered under the plan and the agreement until such time as Vermont shall have adopted equivalent standards in accordance with Subpart C of 29 CFR Part 1953; in private sector offshore maritime activities and will continue to enforce all provisions of the Act, rules or orders, and all Federal standards, current or future, specifically directed to maritime employment (29 CFR Part 1915, shipyard employment; Part 1917, marine terminals; Part 1918, longshoring; Part 1919, gear certification) as well as provisions of general industry and construction standards (29 CFR Parts 1910 and 1926) appropriate to hazards found in these employments, as they relate to employment under the exclusive jurisdiction of the Federal government on the navigable waters of the United States, including dry docks, graving docks, and marine railways; and investigations and inspections for the purpose of the evaluation of the Vermont plan under sections 18(e) and (f) of the Act (29 U.S.C. 667(e) and (f)). Federal OSHA will also retain authority for coverage of Federal government employers and employees; and of the U.S. Postal Service (USPS), including USPS employees, and contract employees and contractor-operated facilities engaged in USPS mail operations. The OSHA Regional Administrator will make a prompt recommendation for the resumption of the exercise of Federal enforcement authority under Section 18(e) of the Act (29 U.S.C. 667(e)) whenever, and to the degree, necessary to assure occupational safety and health protection to employees in Vermont.

[65 FR 36627, June 9, 2000]

§ 1952.273 Developmental schedule.

(a) Introduction and enactment of amendments to the Vermont Occupational Safety and Health Act in the 1974 session of the State legislature;

(b) Completion of the State's Compliance Manual;

(c) Drafting of rules governing the operation of the Occupational Safety and Health Review Board;

(d) Development of specific administrative procedures for implementing the occupational safety and health program within the State agencies by January 1974;

(e) Development of the State's Voluntary Compliance Program for Employers and Employees by January 1974;

(f) Appointment of advisory committees for safety and health standards upon plan approval;

(g) Within three years of plan approval all developmental steps will be fully implemented.

§ 1952.274 Completion of developmental steps and certification.

(a) In accordance with § 1952.273(a), amendments to the Vermont Occupational Safety and Health Act were passed by the legislature and signed by the Governor on April 3, 1974.

(b) In accordance with § 1952.273(c), rules governing the operation of the Occupational Safety and Health Review Board have been adopted, under section 230 of the Vermont Act, effective January, 1974.

(c) In accordance with 29 CFR 1952.273(f), the Vermont Standards Advisory Council was established in January 1974.

(d) In accordance with 29 CFR 1952.273(g), the following developmental steps have been implemented.

(1) The health and safety enforcement program in the State of Vermont including enforcement of the State's occupational safety and health standards and regulations, was implemented on November 12, 1973.

(2) The Vermont Occupational Safety and Health Review Board has been in operation since October 1973, under rules and regulations formally promulgated on February 4, 1974 and approved on December 16, 1974 (39 FR 44201, December 23, 1974).

(3) Recordkeeping and reporting requirements, as approved on October 1, 1973 (38 FR 28658), were implemented for both the private and public sectors on November 12, 1973.

(4) Written procedures for coordination between Vermont's Division of Occupational Safety and Division of Occupational Health were formulated in June 1975, and revised in September 1975.

(e) In accordance with the requirements of § 1952.10 the Vermont Safety and Health Poster for private and public employees as amended by the attachment informing the public of its right to complain about State program administration, was approved by the Assistant Secretary on February 9, 1977.

(f) In accordance with 29 CFR 1952.273(b), the State has developed a Field Operations Manual which defines the procedures and guidelines to be used by the Vermont compliance staff in carrying out the goals of the program and other local government workplaces and which has been approved by the Assistant Secretary on February 22, 1977.

(g) In accordance with 29 CFR 1952.273(d), the State has developed and implemented a State Agency Program by July 1, 1974 and a Public Agency (local and municipal) Enforcement Program by November 12, 1973, which has been approved by the Assistant Secretary on February 22, 1977.

(h) In accordance with 29 CFR 1952.273(e), the State of Vermont has developed and implemented its voluntary Compliance Program, including a training program for employers and employees, by February 1974, which has been approved by the Assistant Secretary as completion of developmental step on February 22, 1977.

(i) In accordance with 29 CFR 1902.34, the Vermont occupational safety and health plan was certified, effective as of the date of publication on March 4, 1977, as having completed all developmental steps specified in the plan (as approved on October 1, 1973) on or before September 30, 1976.

[39 FR 44202, Dec. 23, 1974, as amended at 42 FR 2313, Jan. 11, 1977; 42 FR 9169, Feb. 15, 1977; 42 FR 10989, Feb. 25, 1977, 42 FR 12428, Mar. 4, 1977]

§ 1952.275 Changes to approved plans.

(a) *Legislation.* (1) On March 29, 1994, the Assistant Secretary approved Vermont's revised statutory penalty levels which are the same as the revised Federal penalty levels contained in section 17 of the Act as amended on November 5, 1990.

(2) [Reserved]

(b) [Reserved]

[59 FR 14556, Mar. 29, 1994]

Subpart V [Reserved]

Subpart W—Nevada

§ 1952.290 Description of the plan as initially approved.

(a) The Nevada Occupational Safety and Health program will be administered and enforced by the Department of Occupational Safety and Health of the Nevada Industrial Commission. Administrative adjudications of proposed penalties will be the responsibility of an independent five member review board appointed by the Governor.

(b) The program will cover all activities of employees and places of private and public employment except those involving Federal employment, highway motor vehicles, and railroads, subject to the exercise of jurisdiction under other Federal safety and health programs. It requires employers of one or more employees (including those employed by the State and its political subdivisions) to furnish them employment and a place of employment which are free from recognized hazards that are causing or are likely to cause death or serious physical harm, and to comply with all occupational safety and health standards promulgated or issued by the agency. Moreover, all safety and health standards adopted by the United States Department of Labor shall be deemed Nevada Occupational Safety and Health standards. The Plan also directs employees to comply with all occupational safety and health standards and regulations that are applicable to their own actions and conduct.

(c) The Plan includes procedures for providing prompt and effective standards for the protection of employees against new and unforeseen hazards and for furnishing information to employees on hazards, precautions, symptoms, and emergency treatment; and procedures for the issuance of variances. It provides employer and employee representatives an opportunity to accompany inspectors and call attention to possible violations, before, during, and after inspections; protection of employees against discharge or discrimination in terms and conditions of employment; notice to employees or their representatives when no compliance action is taken upon complaints, including informal review; notice to employees of their protections and obligations; adequate safeguards to protect trade secrets; prompt notice to employers and employees of alleged violations of standards and abatement requirements; effective remedies against employers and the right to review alleged violations, abatement periods, and proposed penalties with opportunity for employee participation in the review proceedings; procedures for prompt restraint or elimination of imminent danger conditions, and procedures for inspection in response to complaints.

(d)(1) The Plan includes a legal opinion that it will meet the requirements of the Occupational Safety and Health Act of 1970, and is consistent with the Constitution and laws of the State of Nevada.

(2) A merit system of personnel administration will be used.

(3) The Plan provides a program of education, training, and consultation for employers and employees.

(4) The Plan is supplemented by the inclusion of implementing legislation and letters dated July 26, August 10, and November 5, 1973, and a telegram dated December 5, 1973.

[39 FR 1009, Jan. 4, 1974, as amended at 39 FR 8613, Mar. 6, 1974]

§ 1952.291 Developmental schedule.

The following is a summary of the major developmental steps provided by the plan:

(a) Training of enforcement personnel to be completed—July 1, 1974.

(b) Application of the program to State and local employees to take effect—July 1, 1974.

(c) Not less than two industrial hygiene experts shall participate in the program—July 1, 1975.

(d) Proposed amendments to the Nevada Occupational Safety and Health Act to have been adopted and to take effect—July 1, 1975.

(e) System of recordkeeping and reporting fully developed and operational—January 1, 1977.

(f) Program to be fully implemented—January 1, 1977.

[39 FR 1009, Jan. 4, 1974. Redesignated at 52 FR 34383, Sept. 11, 1987]

§ 1952.292 Completion of developmental steps and certification.

(a) A separate and autonomous onsite consultation program became effective on July 1, 1975, and was approved by the Assistant Secretary on February 26, 1976.

(b) In accordance with § 1952.293(c), as amended, the Nevada health program was submitted on December 3, 1976 and has been implemented.

(c) In accordance with the requirements of § 1952.10, the Nevada poster for private employers was approved by the Assistant Secretary on December 23, 1977.

(d) In accordance with § 1952.293(a), initial training of Nevada personnel has been completed.

(e) Nevada began participation in the Bureau of Labor Statistics annual survey of occupational injuries and illnesses on July 19, 1976.

(f) Standards identical to Federal standards promulgated through January 18, 1977 were adopted by the State and approved by the Regional Administrator in a notice published in the FEDERAL REGISTER on July 26, 1977 (42 FR 38026).

(g) Regulations concerning the Rules of Occupational Safety and Health Recordkeeping Requirements were submitted on September 16, 1976, revised effective January 9, 1981, and approved by the Assistant Secretary on August 13, 1981.

(h) Regulations concerning the Rules of Procedures of Occupational Safety and Health Review Commission; Rules of Practice for Variances; and Rules for Inspections, Citations, and Proposed Penalties were submitted on June 24, 1975, revised effective January 9, 1981, and approved by the Assistant Secretary on August 13, 1981.

(i) Regulations concerning the Public Employee Program were submitted on June 24, 1975, revised effective February 15, 1979, and approved by the Assistant Secretary on August 13, 1981.

(j) In accordance with the requirements of § 1952.10, the revised poster was submitted on April 7, 1980, and approved by the Assistant Secretary on August 13, 1981.

(k) Amendments to the State's legislation were submitted on June 24, 1975 and July 1, 1977, became effective on July 1, 1975 and July 1, 1977, and approved by the Assistant Secretary on August 13, 1981.

(l) The Nevada Field Operations Manual was submitted on June 24, 1975, revised to reflect those changes made in the Federal Field Operations Manual through March, 1981, and approved by the Assistant Secretary on August 13, 1981.

(m) In accordance with § 1902.34 of this chapter, the Nevada occupational safety and health plan was certified, effective August 13, 1981 as having completed all developmental steps specified in the plan as approved on December 28, 1973, on or before January 1, 1977. This certification attests to structural completion, but does not render judgment on adequacy of performance.

[41 FR 8955, Mar. 2, 1976, as amended at 42 FR 64627, Dec. 27, 1977; 46 FR 42844, 42846, Aug. 25, 1981. Redesignated at 52 FR 34383, Sept. 11, 1987]

§ 1952.293 Compliance staffing benchmarks.

Under the terms of the 1978 Court Order in *AFL-CIO* v. *Marshall* compliance staffing levels (benchmarks) necessary for a ''fully effective'' enforcement program were required to be established for each State operating an approved State plan. In July 1986 Nevada, in conjunction with OSHA, completed a reassessment of the levels initially established in 1980 and proposed revised compliance staffing benchmarks of 11 safety and 5 health compliance officers. After opportunity for public comment and service on the AFL-CIO, the Assistant Secretary approved these revised staffing requirements on September 2, 1987.

[52 FR 34383, Sept. 11, 1987]

§ 1952.294 Final approval determination.

(a) In accordance with section 18(e) of the Act and procedures in 29 CFR Part 1902, and after determination that the State met the ''fully effective'' compliance staffing benchmarks as revised in 1986 in response to a court order in AFL-CIO v. Marshall, 570 F.2d 1030 (D.C. Cir 1978), and was satisfactorily providing reports to OSHA through participation in the Federal-State Integrated Management Information

System, the Assistant Secretary evaluated actual operations under the Nevada State plan for a period of at least one year following certification of completion of developmental steps. Based on an 18(e) Evaluation Report covering the period July 1, 1995 through March 31, 1999, and after opportunity for public comment, the Assistant Secretary determined that in operation the State of Nevada's occupational safety and health program is at least as effective as the Federal program in providing safe and healthful employment and places of employment and meets the criteria for final State plan approval in section 18(e) of the Act and implementing regulations at 29 CFR Part 1902. Accordingly, the Nevada plan was granted final approval and concurrent Federal enforcement authority was relinquished under section 18(e) of the Act effective April 18, 2000.

(b) Except as otherwise noted, the plan which has received final approval covers all activities of employers and all places of employment in Nevada. The plan does not cover Federal government employers and employees; any private sector maritime activities; employment on Indian land; any contractors or subcontractors on any Federal establishment where the land is determined to be exclusive Federal jurisdiction; and the U.S. Postal Service (USPS), including USPS employees, contract employees, and contractor-operated facilities engaged in USPS mail operations.

(c) Nevada is required to maintain a State program which is at least as effective as operations under the Federal program; to submit plan supplements in accordance with 29 CFR Part 1953; to allocate sufficient safety and health enforcement staff to meet the benchmarks for State staffing established by the U.S. Department of Labor, or any revisions to those benchmarks; and, to furnish such reports in such form as the Assistant Secretary may from time to time require.

[65 FR 20742, Apr. 18, 2000, as amended at 65 FR 36627, June 9, 2000]

§ 1952.295 Level of Federal enforcement.

(a) As a result of the Assistant Secretary's determination granting final approval to the Nevada State plan under section 18(e) of the Act, effective April 18, 2000, occupational safety and health standards which have been promulgated under section 6 of the Act do not apply with respect to issues covered under the Nevada Plan. This determination also relinquishes concurrent Federal OSHA authority to issue citations for violations of such standards under section 5(a)(2) and 9 of the Act; to conduct inspections and investigations under section 8 (except those necessary to conduct evaluation of the plan under section 18(f) and other inspections, investigations, or proceedings necessary to carry out Federal responsibilities not specifically preempted by section 18(e)); to conduct enforcement proceedings in contested cases under section 10; to institute proceedings to correct imminent dangers under section 13; and to propose civil penalties or initiate criminal proceedings for violations of the Federal OSH Act under section 17. The Assistant Secretary retains jurisdiction under the above provisions in any proceeding commenced under section 9 or 10 before the effective date of the 18(e) determination.

(b)(1) In accordance with section 18(e), final approval relinquishes Federal OSHA authority only with regard to occupational safety and health issues covered by the Nevada plan. OSHA retains full authority over issues which are not subject to State enforcement under the plan. Thus, Federal OSHA retains its authority relative to safety and health in private sector maritime activities and will continue to enforce all provisions of the Act, rules or orders, and all Federal standards, current or future, specifically directed to any private sector maritime activities (occupational safety and health standards comparable to 29 CFR Parts 1915, shipyard employment; 1917, marine terminals; 1918, longshoring; and 1919, gear certification, as well as provisions of general industry and construction standards (29 CFR Parts 1910 and 1926) appropriate to hazards found in these employments), employment on

Indian land, and any contractors or subcontractors on any Federal establishment where the land is determined to be exclusive Federal jurisdiction. Federal jurisdiction is also retained with respect to Federal government employers and employees. Federal OSHA will also retain authority for coverage of the U.S. Postal Service (USPS), including USPS employees, contract employees, and contractor-operated facilities engaged in USPS mail operations.

(2) In addition, any hazard, industry, geographical area, operation or facility over which the State is unable to effectively exercise jurisdiction for reasons which OSHA determines are not related to the required performance or structure of the plan shall be deemed to be an issue not covered by the State plan which has received final approval, and shall be subject to Federal enforcement. Where enforcement jurisdiction is shared between Federal and State authorities for a particular area, project, or facility, in the interest of administrative practicability Federal jurisdiction may be assumed over the entire project or facility. In any of the aforementioned circumstances, Federal enforcement authority may be exercised after consultation with the State designated agency.

(c) Federal authority under provisions of the Act not listed in section 18(e) is unaffected by final approval of the Nevada State plan. Thus, for example, the Assistant Secretary retains his authority under section 11(c) of the Act with regard to complaints alleging discrimination against employees because of the exercise of any right afforded to the employee by the Act, although such complaints may be referred to the State for investigation. The Assistant Secretary also retains his authority under section 6 of the Act to promulgate, modify or revoke occupational safety and health standards which address the working conditions of all employees, including those in States which have received an affirmative 18(e) determination, although such standards may not be Federally applied. In the event that the State's 18(e) status is subsequently withdrawn and Federal authority reinstated, all Federal standards, including any standards promulgated or modified during the 18(e) period, would be Federally enforceable in that State.

(d) As required by section 18(f) of the Act, OSHA will continue to monitor the operations of the Nevada State program to assure that the provisions of the State plan are substantially complied with and that the program remains at least as effective as the Federal program. Failure by the State to comply with its obligations may result in the suspension or revocation of the final approval determination under Section 18(e), resumption of Federal enforcement, and/or proceedings for withdrawal of plan approval.

[65 FR 20742, Apr. 18, 2000, as amended at 65 FR 36627, June 9, 2000]

§ 1952.296 Where the plan may be inspected.

A copy of the principal documents comprising the plan may be inspected and copied during normal business hours at the following locations: Office of State Programs, Directorate of Federal-State Operations, Occupational Safety and Health Administration, U.S. Department of Labor, 200 Constitution Avenue NW, Room N3700, Washington, DC 20210; Office of the Regional Administrator, Occupational Safety and Health Administration, Room 415, 71 Stevenson Street, San Francisco, California 94105; Office of the State Designee, Administrator, Nevada Division of Industrial Relations, 400 West King Street, Suite 400, Carson City, Nevada 89703.

[65 FR 20743, Apr. 18, 2000]

§ 1952.297 Changes to approved plans.

(a) *Legislation*. (1) On March 29, 1994, the Assistant Secretary approved Nevada's revised statutory penalty levels which are the same as the revised Federal penalty levels contained in section 17 of the Act as amended on November 5, 1990.

(2) [Reserved]

(b) *Notices of violation*. The State submitted a procedure for issuing notices of violation in lieu of citations for certain other than serious violations which the employer agrees to abate.

The procedure as modified was approved by the Assistant Secretary on August 24, 1995.

(c) *Legislation*. The State submitted amendments to its Occupational Safety and Health Act, enacted in 1981, which: provide for notices of violation in lieu of citations for certain other than serious violations; delete the authority for temporary variances for other than new standards; allow the Nevada Occupational Safety and Health Appeals Board to employ legal counsel; allow penalty collection actions to be brought in any court of competent jurisdiction; and ensure confidentiality to employees making statements to the Division of Occupational Safety and Health. Further amendments, enacted in 1989: require the maintenance of specific logs relating to complaints; provide public access to records on complaints, except for confidential information; provide confidentiality for those employees who file complaints or make statements, as well as for files relating to open cases; allow representatives of employees and former employees access to any records which indicate their exposure to toxic materials or harmful physical agents; define representative of employees or former employees; allow health care providers and government employees in the field of public safety, to file complaints; allow for oral complaints; require the division to respond to valid complaints of serious violations immediately and of other violations within 14 days; provide that an employee who accompanies a compliance officer on the inspection is entitled to be paid for the time spent, but that only one employee may accompany the compliance officer during the inspection; allow the Administrator of the Division of Occupational Safety and Health to issue an emergency order to restrain an imminent danger situation; and, double maximum authorized penalty levels. Amendments enacted in 1993 reflect the new State organizational structural by designating the previous Divisions as sections in the Division of Industrial Relations of the Department of Business and Industry. The Assistant Secretary approved these amendments on August 24, 1995.

(d) *Field Operations Manual*. The State's Field Operations Manual, comparable to the Federal Field Operations Manual, through Change 4, was approved by the Assistant Secretary on August 24, 1995.

(e) *Consultation Manual*. The State's Training and Consultation Section Policies and Procedures Manual was approved by the Assistant Secretary on August 24, 1995.

(f) *Occupational Safety and Health Administration Technical Manual*. The State's adoption of the Federal OSHA Technical Manual, through Change 3, with a cover sheet adapting Federal references to the State's administrative structure, was approved by the Assistant Secretary on August 24, 1995.

(g) *Pre-construction conferences*. A State regulations requiring pre-construction conferences with the Division of Industrial Relations for certain types of construction projects was approved by the Assistant Secretary on August 24, 1995.

(h) *Reorganized Plan*. The reorganization of the Nevada plan was approved by the Assistant Secretary on August 24, 1995.

[59 FR 14556, Mar. 29, 1994, as amended at 60 FR 43972, Aug. 24, 1995]

Subpart X [Reserved]

Subpart Y—Hawaii

§ 1952.310 Description of the plan as initially approved.

(a) The plan designates the Department of Labor and Industrial Relations as the agency responsible for administering the plan throughout the State. It proposes to define the occupational safety and health issues covered by it as defined by the Secretary of Labor in 29 CFR 1902.2(c)(1). All occupational safety and health standards promulgated by the U.S. Secretary of Labor will be adopted under the plan as well as certain standards deemed to be ''as effective as'' the Federal standards, except those found in 29 CFR parts 1915, 1916, 1917, and 1918 (ship repairing, shipbuilding, shipbreaking and longshoring).

(b) Within the plan there is the Hawaii Occupational Safety and Health

Law which became law on May 16, 1972. The law as enacted gives the Department of Labor and Industrial Relations the authority to inspect workplaces and to issue citations for the abatement of violations and there is also included a prohibition against advance notice of such inspections. The law is also intended to insure employer and employee representatives an opportunity to accompany inspectors and to call attention to possible violations; notification of employees or their representatives when no compliance action is taken as a result of alleged violations; protection of employees against discharge or discrimination in terms and conditions of employment; adequate safeguards to protect trade secrets. There is provision made for the prompt restraint of imminent danger situations and a system of penalties for violation of the law.

(c) The plan also includes proposed amendments to be considered by the Hawaii Legislature during its 1974 session amending the Occupational Safety and Health Law, and related provisions, to bring them into conformity with the requirements of part 1902.

(d) The Hawaii plan includes the following documents as of the date of approval:

(1) The plan description documents, including the Hawaii Occupational Safety and Health Law, the proposed amendments to the Law and appendices in three (3) volumes;

(2) Letter from Robert K. Hasegawa, Director of the Department of Labor and Industrial Relations, to Jay Arnoldus, Project Officer, Office of Federal and State Operations, December 10, 1973, submitting clarifications to the plan.

(3) Letters from Robert C. Gilkey, Deputy Director of the Department of Labor and Industrial Relations, to Jay Arnoldus, December 3, 1973 and December 4, 1973 submitting clarifications and deletion to the plan.

(4) Letters from Robert K. Hasegawa to Gabriel Gillotti, Assistant Regional Director, January 30, 1973, and June 28, 1973.

(5) Letter from Robert A. Gilkey to John H. Stender, Assistant Secretary of Labor, October 30, 1973.

(6) Letters from Robert K. Hasegawa to John H. Stender, Assistant Secretary of Labor, November 7, 1973 and September 14, 1973 submitting proposed legislative amendments and modifications and clarifications to the plan.

[39 FR 1012, Jan. 4, 1974, as amended at 49 FR 19192, May 4, 1984]

§ 1952.311 Developmental schedule.

(a) Introduction of Legislative amendments to State Legislature January 1974.

(b) Hearings on standards promulgation March 1974.

(c) Implementation of the Management Information System by December 1975.

(d) Complete implementation of the occupational health program by July 1975.

(e) Complete State plan implementation December 1976.

[39 FR 1013, Jan. 4, 1974. Redesignated and amended at 39 FR 44752, Dec. 27, 1974; 40 FR 28792, July 9, 1975. Further redesignated at 49 FR 19192, May 4, 1984]

§ 1952.312 Completion of developmental steps and certification.

(a) In accordance with § 1952.313(i), specific Legislative amendments were enacted by the State Legislature and signed by the Acting Governor on June 7, 1974, and amended by Act 95 of the 1976 Hawaii Legislative Session.

(b) In accordance with § 1952.313(d), as amended, the Hawaii Occupational Health Plan was submitted to the Assistant Secretary on April 16, 1974, and approved on December 20, 1974, incorporating assurances from the State, by letter dated November 19, 1974.

(c) In accordance with § 1952.313(b), as amended, the Hawaii occupational safety and health standards were promulgated on April 18, 22, 23, 24, and 25, 1975.

(d) In accordance with the requirements of 29 CFR 1952.10, the Hawaii State poster was approved by the Assistant Secretary on February 4, 1975.

(e) In accordance with 29 CFR 1952.313(d), as amended, the Hawaii occupational health program was implemented on July 1, 1975.

(f) The Rules of Procedure of the Hawaii Division of Occupational Safety

and Health were promulgated in September, 1972, and revised in January, 1974. These rules include: Regulations on inspections, citations, and proposed penalties (chapter 102); regulations for recording and reporting occupational injuries and illnesses (chapter 103); rules of practice for variances (chapter 104); regulations concerning administration witnesses and documents in private litigation (chapter 105); and regulations for promulgating, modifying, or revoking occupational safety and health standards (chapter 106).

(g) In accordance with 29 CFR 1952.313(c), as amended, the Hawaii Management Information System was completed and in operation by December 31, 1975.

(h) In accordance with § 1902.34 of this chapter, the Hawaii occupational safety and health plan was certified, effective April 26, 1978 as having completed all developmental steps specified in the plan as approved on December 28, 1973, on or before December 31, 1976.

[39 FR 44203, Dec. 23, 1974, as amended at 39 FR 44752, Dec. 27, 1974; 40 FR 6336, Feb. 11, 1975; 41 FR 26218, June 25, 1976; 43 FR 5821, Feb. 10, 1978; 43 FR 19851, May 9, 1978. Redesignated at 49 FR 19192, May 4, 1984]

§ 1952.313 [Reserved]

§ 1952.314 Level of Federal enforcement.

(a) With Hawaii's agreement and as a result of the Assistant Secretary's reinstatement of Hawaii's initial approval status, Hawaii and Federal OSHA will begin exercising concurrent jurisdiction under section 18(e) of the Act on September 21, 2012.

(b) To provide a workable division of enforcement responsibilities, Hawaii and Federal OSHA have entered into an operational status agreement. Electronic copies of the agreement are available at: *http://www.osha.gov/dcsp/osp/stateprogs/hawaii.html*.

[77 FR 58490, Sept. 21, 2012, as amended at 79 FR 8857, Feb. 14, 2014]

§ 1952.315 Where the plan may be inspected.

A copy of the principal documents comprising the plan may be inspected and copied during normal business hours at the following locations:

Office of State Programs, Occupational Safety and Health Administration, U.S. Department of Labor, 200 Constitution Avenue, NW, Room N3700, Washington, DC 20210;

Office of the Regional Administrator, Occupational Safety and Health Administration, U.S. Department of Labor, 71 Stevenson Street, 4th Floor, San Francisco, California 94105; and

Office of the Director, Hawaii Department of Labor and Industrial Relations, 830 Punchbowl Street, Honolulu, Hawaii 96831.

[65 FR 36628, June 9, 2000]

§ 1952.316 Changes to approved plans.

(a) *Legislation*. (1) On March 29, 1994, the Assistant Secretary approved Hawaii's revised statutory penalty levels which are the same as the revised Federal penalty levels contained in section 17 of the Act as amended on November 5, 1990.

(2) [Reserved]

(b)(1) *Regulations*. The State's regulation on the Division of Occupational Safety and Health's Access to Employee Medical Records, and amendments to State regulations covering the Labor and Industrial Relations Appeals Board; General Provisions and Definitions; Recording and Reporting Occupational Injuries and Illnesses; Inspections, Citations, and Proposed Penalties; and Variances, promulgated by the State through March 22, 1991, were approved by the Assistant Secretary on February 20, 1995.

(2) [Reserved]

(c) *Legislation*. (1) An amendment to the Hawaii Occupational Safety and Health Law, enacted in 1987, which expands the type of information that is protected from disclosure in any discovery or civil action arising out of enforcement or administration of the law, was approved by the Assistant Secretary on February 20, 1995.

(2) [Reserved]

(d) *Consultation Manual*. The State's Consultation Policies and Procedures Manual was approved by the Assistant Secretary on February 20, 1995.

(e) *Occupational Safety and Health Administration Technical Manual*. The State's adoption of the Federal OSHA Technical Manual, through Change 1, was approved by the Assistant Secretary on February 20, 1995.

(f) *Reorganized Plan*. The reorganization of the Hawaii plan was approved by the Assistant Secretary on February 20, 1995.

[59 FR 14556, Mar. 29, 1994 as amended at 60 FR 12419, Mar. 7, 1995]

Subpart Z—Indiana

§ 1952.320 Description of the plan as initially approved.

(a)(1) The plan identifies the Indiana Division of Labor as the State agency designated to implement and carry out the State plan. Within this structure, the Occupational Safety Standards Commission has the responsibility to adopt standards and dispose of variance applications; the Commissioner of Labor is charged with the administration and enforcement of the Act; and the Board of Safety Review is to conduct and decide contested cases. The State Board of Health, Industrial Hygiene Division, pursuant to an agreement with the Division of Labor will provide laboratory services and will conduct occupational health inspections as scheduled by the Division of Labor.

(2) The plan defines the covered occupational safety and health issues as defined by the Secretary of Labor in 29 CFR 1902.2(c)(1). Further, Indiana has adopted all Federal safety and health standards contained in 29 CFR parts 1910 and 1926. The State program is to extend its protection to all employees in the State including those employed by it and its political subdivisions.

(b) The plan includes existing enabling legislation and the Indiana Occupational Safety and Health Act (IC 1971, 22–8–1.1 *et seq.*) as well as amendments to this Act which were passed and became effective on May 1, 1973. Under the Act as amended the Division of Labor has authority to administer and enforce the provisions of the State plan.

(c) The legislation provides procedures for the promulgation of standards; furnishing information to employees on hazardous and toxic substances; and procedures for granting temporary and permanent variances. The law also contains procedures for inspections including inspections in response to complaints; ensures employer and employee representatives an opportunity to accompany inspectors and to call attention to possible violations before, during and after inspections; protection of employees against discharge or discrimination in terms or conditions of employment through court suits brought by the Attorney General at the request of the Commissioner; notice to employees of their protections and obligations under the State law; prompt restraint of imminent danger situations; safeguard to protect trade secrets; prompt notice to employers and employees of alleged violations of standards and abatement requirements; effective sanctions against employers; and employer right to review of alleged violations, abatement periods, and proposed penalties with an opportunity for employee participation and employee right of review of such abatement periods.

(d) The plan also contains a voluntary compliance program. The State will conduct seminars, conferences and meetings designed for management, supervisory personnel, employees and union representatives to transmit information about its safety and health program. These programs are specifically designed to cover the following areas: general industrial safety, construction safety, first aid instruction, supervisory safety training, hazard recognition, Indiana occupational health and safety laws, federal occupational safety and health laws, State health and safety standards, injury and illness reporting procedures requirements, rights and obligations to employers and employees, enforcement programs. On-site consultation services will be available for employers upon request as part of the developmental plan.

(e) Also included in the plan are proposed budgets to be devoted to it as well as descriptions of the job classifications and personnel who will be carrying out the program. Further, the plan sets out goals and provides a timetable for bringing it into full conformity with 29 CFR part 1902.

[39 FR 8612, Mar. 6, 1974, as amended at 51 FR 2488, Jan. 17, 1986]

§ 1952.321 Developmental schedule.

(a) Proposed legislative amendments to be introduced in the 1974 session of the State legislature;

(b) Refresher Course for inspectors will be completed by September 1, 1974;

(c) A full complement of 69 inspectors will be hired by the end of the first year of plan operation; the State will add 10 inspectors for each of the two succeeding years;

(d) Development of a State employee safety program within nine months following plan approval;

(e) Establishment of the rules of procedure for on-site consultations within nine months following plan approval;

(f) Within three years of plan approval all developmental steps will be fully implemented.

[39 FR 8612, Mar. 6, 1974. Redesignated at 51 FR 2488, Jan. 17, 1986]

§ 1952.322 Completion of developmental steps and certification.

(a) In accordance with the requirements of § 1952.10, the Indiana poster was approved for use until Federal enforcement authority and standards become inapplicable to issues covered under the plan, by the Assistant Secretary on March 2, 1976.

(b) In accordance with 29 CFR 1952.323(a), Indiana amended the Indiana Occupational Safety and Health Act (I.C. 22–8–1.1) in 1975, 1977, and 1978. These amendments were approved by the Assistant Secretary on September 24, 1981.

(c) In accordance with 29 CFR 1952.323(b), Indiana submitted documentation outlining training and refresher courses for its compliance staff on May 19, 1975 and May 4, 1981. This supplement was approved by the Assistant Secretary on September 24, 1981.

(d) In accordance with 29 CFR 1952.323(c), Indiana submitted documentation on May 4, 1981, showing that it has substantially met its compliance staffing commitments by providing for 14 health and 70 safety compliance officers. This supplement was approved by the Assistant Secretary on September 24, 1981.

(e) In accordance with 29 CFR 1952.323(d), Indiana developed an occupational safety and health program for public employees on August 25, 1975, and resubmitted a revised program with implementing regulations on September 5, 1981. These were approved by the Assistant Secretary on September 24, 1981.

(f) In accordance with 29 CFR 1952.323(e), Indiana promulgated rules for on-site consultation on March 7, 1975, which were amended on September 5, 1981. These regulations were approved by the Assistant Secretary on September 24, 1981.

(g) Indiana submitted its compliance operations manual on August 7, 1975, which was subsequently revised in 1978 and again on June 4, 1980. The State submitted a revised Industrial Hygiene manual on July 15, 1981. These manuals, which reflect changes in the Federal program through 1980 were approved by the Assistant Secretary on September 24, 1981.

(h) Indiana promulgated regulations for inspections, safety orders, and proposed penalties parallel to 29 CFR part 1903 on January 18, 1977 with amendments dated July 29, 1977 and September 5, 1981. These regulations were approved by the Assistant Secretary on September 24, 1981.

(i) Indiana promulgated regulations for recordkeeping and reporting of occupational injuries and illnesses parallel to 29 CFR part 1904 on January 18, 1977, which were amended on September 10, 1979. The State also revised its recordkeeping and reporting provisions for the public sector on September 5, 1981. These regulations were approved by the Assistant Secretary on September 24, 1981.

(j) Indiana promulgated rules for variances, limitations, variations, tolerances, and exemptions, parallel to 29 CFR part 1905 on December 17, 1976, which were revised June 3, 1977 and September 5, 1981. These regulations were approved by the Assistant Secretary on September 24, 1981.

(k) Indiana adopted rules of procedure for the Board of Safety Review on September 19, 1976, which were subsequently amended on September 5, 1981. These regulations were approved by the Assistant Secretary on September 24, 1981.

(l) Indiana deleted coverage of the maritime and longshoring issues from

its plan on June 9, 1981. This supplement was approved by the Assistant Secretary on September 24, 1981.

(m) Indiana submitted documentation on establishment of its Management Information System on May 20, 1974. This supplement was approved by the Assistant Secretary on September 24, 1981.

(n) In accordance with § 1902.34 of this chapter, the Indiana occupational safety and health plan was certified, effective October 16, 1981 as having completed all developmental steps specified in the plan as approved on February 25, 1974 on or before February 25, 1977. This certification attests to structural completion, but does not render judgment on adequacy of performance.

[46 FR 49119, 49121, Oct. 6, 1981; 47 FR 28918, July 2, 1982. Redesignated at 51 FR 2488, Jan. 17, 1986]

§ 1952.323 Compliance staffing benchmarks.

Under the terms of the 1978 Court Order in *AFL-CIO* v. *Marshall* compliance staffing levels (benchmarks) necessary for a ''fully effective'' enforcement program were required to be established for each State operating an approved State plan. In September 1984 Indiana, in conjunction with OSHA, completed a reassessment of the levels initially established in 1980 and proposed revised compliance staffing benchmarks of 47 safety and 23 health compliance officers. After opportunity for public comment and service on the AFL-CIO, the Assistant Secretary approved these revised staffing requirements on January 17, 1986.

[51 FR 2488, Jan. 17, 1986]

§ 1952.324 Final approval determination.

(a) In accordance with section 18(e) of the Act and procedures in 29 CFR part 1902, and after determination that the State met the ''fully effective'' compliance staffing benchmarks as revised in 1986 in response to a Court Order in *AFL-CIO* v. *Marshall* (CA 74–406), and was satisfactorily providing reports to OSHA through participation in the Federal-State Integrated Management Information System, the Assistant Secretary evaluated actual operations under the Indiana State plan for a period of at least one year following certification of completion of developmental steps (46 FR 49119). Based on the 18(e) Evaluation Report for the period of March 1984 through December 1985, and after opportunity for public comment, the Assistant Secretary determined that in operation the State of Indiana's occupational safety and health program is at least as effective as the Federal program in providing safe and healthful employment and places of employment and meets the criteria for final State plan approval in section 18(e) of the Act and implementing regulations at 29 CFR part 1902. Accordingly, the Indiana plan was granted final approval, and concurrent Federal enforcement authority was relinquished under section 18(e) of the Act effective September 26, 1986.

(b) Except as otherwise noted, the plan which has received final approval covers all activities of employers and all places of employment in Indiana. The plan does not cover maritime employment in the private sector; Federal government employers and employees; the U.S. Postal Service (USPS), including USPS employees, and contract employees and contractor-operated facilities engaged in USPS mail operations; the enforcement of the field sanitation standard, 29 CFR 1928.110, and the enforcement of the temporary labor camps standard, 29 CFR 1910.142, with respect to any agricultural establishment where employees are engaged in ''agricultural employment'' within the meaning of the Migrant and Seasonal Agricultural Worker Protection Act, 29 U.S.C. 1802(3), regardless of the number of employees, including employees engaged in hand packing of produce into containers, whether done on the ground, on a moving machine, or in a temporary packing shed, except that Indiana retains enforcement responsibility over agricultural temporary labor camps for employees engaged in egg, poultry, or red meat production, or the post-harvest processing of agricultural or horticultural commodities.

(c) Indiana is required to maintain a State program which is at least as effective as operations under the Federal program; to submit plan supplements in accordance with 29 CFR part 1953; to allocate sufficient safety and health

enforcement staff to meet the benchmarks for State staffing established by the U.S. Department of Labor, or any revisions to those benchmarks; and, to furnish such reports in such form as the Assistant Secretary may from time to time require.

[51 FR 34215, Sept. 26, 1986, as amended at 62 FR 2564, Jan. 17, 1997; 65 FR 36628, June 9, 2000]

§ 1952.325 Level of Federal enforcement.

(a) As a result of the Assistant Secretary's determination granting final approval to the Indiana plan under section 18(e) of the Act, effective September 26, 1986, occupational safety and health standards which have been promulgated under section 6 of the Act do not apply with respect to issues covered under the Indiana plan. This determination also relinquishes concurrent Federal OSHA authority to issue citations for violations of such standards under sections 5 (a)(2) and 9 of the Act; to conduct inspections and investigations under section 8 (except those necessary to conduct evaluation of the plan under section 18(f) and other inspections, investigations, or proceedings necessary to carry out Federal responsibilities not specifically preempted by section 18(e)); to conduct enforcement proceedings in contested cases under section 10; to institute proceedings to correct imminent dangers under section 13; and to propose civil penalties or initiate criminal proceedings for violations of the Federal Act under section 17. The Assistant Secretary retains jurisdiction under the above provisions in any proceeding commenced under section 9 or 10 before the effective date of the 18(e) determination.

(b)(1) In accordance with section 18(e), final approval relinquishes Federal OSHA authority only with regard to occupational safety and health issues covered by the Indiana plan. OSHA retains full authority over issues which are not subject to State enforcement under the plan. Thus, Federal OSHA retains its authority relative to safety and health in private sector maritime activities and will continue to enforce all provisions of the Act, rules or orders, and all Federal standards, current or future, specifically directed to maritime employment (29 CFR Part 1915, shipyard employment; Part 1917, marine terminals; Part 1918, longshoring; Part 1919, gear certification), as well as provisions of general industry and construction standards (29 CFR Parts 1910 and 1926) appropriate to hazards found in these employments. Federal jurisdiction is retained and exercised by the Employment Standards Administration, U.S. Department of Labor, (Secretary's Order 5–96, dated December 27, 1996) with respect to the field sanitation standard, 29 CFR 1928.110, and the enforcement of the temporary labor camps standard, 29 CFR 1910.142, in agriculture, as described in § 1952.324(b). Federal jurisdiction is also retained with respect to Federal government employers and employees, and the U.S. Postal Service (USPS), including USPS employees, and contract employees and contractor-operated facilities engaged in USPS mail operations.

(2) In addition, any hazard, industry, geographical area, operation or facility over which the State is unable to effectively exercise jurisdiction for reasons not related to the required performance or structure of the plan shall be deemed to be an issue not covered by the plan which has received final approval and shall be subject to Federal enforcement. Where enforcement jurisdiction is shared between Federal and State authorities for a particular area, project, or facility, in the interest of administrative practicability Federal jurisdiction may be assumed over the entire project or facility. In either of the two aforementioned circumstances, Federal enforcement may be exercised immediately upon agreement between Federal OSHA and the State designated agency.

(c) Federal authority under provisions of the Act not listed in section 18(e) is unaffected by final approval of the plan. Thus, for example, the Assistant Secretary retains his authority under section 11(c) of the Act with regard to complaints alleging discrimination against employees because of the exercise of any right afforded to the employee by the Act, although such complaints may be referred to the State for investigation. The Assistant

Secretary also retains his authority under section 6 of the Act to promulgate, modify or revoke occupational safety and health standards which address the working conditions of all employees, including those in States which have received an affirmative 18(e) determination, although such standards may not be federally applied. In the event that the State's 18(e) status is subsequently withdrawn and Federal authority reinstated, all Federal standards, including any standards promulgated or modified during the 18(e) period, would be federally enforceable in that State.

(d) As required by section 18(f) of the Act, OSHA will continue to monitor the operations of the Indiana State program to assure that the provisions of the State plan are substantially complied with and that the program remains at least as effective as the Federal program. Failure by the State to comply with its obligations may result in the revocation of the final determination under section 18(e), resumption of Federal enforcement, and/or proceedings for withdrawal of plan approval.

[51 FR 34215, Sept. 26, 1986, as amended at 62 FR 2564, Jan. 17, 1997; 65 FR 36628, June 9, 2000]

§ 1952.326 Where the plan may be inspected.

A copy of the principal documents comprising the plan may be inspected and copied during normal business hours at the following locations:

Office of State Programs, Occupational Safety and Health Administration, U.S. Department of Labor, 200 Constitution Avenue, NW, Room N3700, Washington, DC 20210;

Regional Administrator, Occupational Safety and Health Administration, U.S. Department of Labor, 230 S. Dearborn Street, 32nd Floor, Room 3244, Chicago, Illinois 60604; and

Office of the Commissioner, Indiana Department of Labor, State Office Building, 402 West Washington Street, Room W195, Indianapolis, Indiana 46204.

[65 FR 36628, June 9, 2000]

§ 1952.327 Changes to approved plans.

(a) *Legislation.* (1) On March 29, 1994, the Assistant Secretary approved Indiana's revised statutory penalty levels which are the same as the revised Federal penalty levels contained in section 17 of the Act as amended on November 5, 1990.

(2) [Reserved]

(b) *Temporary labor camps/field sanitation.* Effective February 3, 1997, the Assistant Secretary approved Indiana's plan amendment, dated July 9, 1996, relinquishing coverage for the issues of field sanitation (29 CFR 1928.110) and temporary labor camps (29 CFR 1910.142) in agriculture (except for agricultural temporary labor camps associated with egg, poultry or red meat production, or the post-harvest processing of agricultural or horticultural commodities.) The Employment Standards Administration, U.S. Department of Labor, has assumed responsibility for enforcement of these Federal OSHA standards in agriculture in Indiana pursuant to Secretary of Labor's Order 5–96, dated December 27, 1996.

(c) *The Voluntary Protection Program.* On October 24, 1996, the Assistant Secretary approved Indiana's plan supplement which is generally identical to the Federal Voluntary Protection Program, with the exception of organizational and position titles.

[59 FR 14556, Mar. 29, 1994, as amended at 61 FR 55099, Oct. 24, 1996; 62 FR 2564, Jan. 17, 1997]

Subpart AA [Reserved]

Subpart BB—Wyoming

§ 1952.340 Description of the plan as initially approved.

(a) The plan identifies the Wyoming Occupational Health and Safety Commission as the agency to be responsible for administering the plan throughout the State. The Commission will be responsible for promulgating and enforcing occupational safety and health standards and deciding contested cases, subject to judicial review.

(b) The State program will protect all employees within the State, including those employed by the State and its political subdivisions. Public employees are to be granted the same protections as are afforded employees in the private sector. The State plan does not cover employees of the Federal government or those employees whose

working conditions are regulated by Federal agencies other than the U.S. Department of Labor.

(c) The Wyoming Occupational Health and Safety Act gives the State agency full authority to administer and to enforce all laws, rules, and orders protecting employee safety and health in all places of employment in the State. The legislation provides employer and employee representatives an opportunity to accompany inspectors before or during the physical inspection of any workplace for the purpose of aiding such inspection; adequate safeguards to protect trade secrets; effective sanctions against employers; protection of employees against discharge or discrimination; procedures for prompt restraint or elimination of imminent danger situations; the right to review by employers and employees of alleged violations, abatement periods and proposed penalties; and prompt notice to employers and employees of alleged violations of standards and abatement requirements.

(d) Administrative regulations include procedures for permanent and temporary variances; notice to employees or their representatives when no compliance action is taken as a result of a complaint, including procedures for informal review; information to employees on hazards, precautions, symptoms and emergency treatment; and training and education programs for employers and employees, including an on-site consultation program consistent with the criteria set out in the Washington Plan decision (38 FR 2421).

(e) The State intends to promulgate Federal standards covering all of the issues contained in parts 1910 and 1926 of this chapter but will not cover those found in parts 1915, 1916, 1917, and 1918 of this chapter (ship repairing, ship building, ship breaking, and longshoring). The State also plans to adopt additional vertical standards relating to oil well drilling and servicing not provided by the Federal program. Future Federal standards shall be promulgated by the State within six months after promulgation by the Secretary of Labor. In the case of product standards the State has provided assurances that any State product standards will be required by compelling local conditions and will not unduly burden interstate commerce.

(f) The plan sets out goals and provides a timetable for bringing it into full conformity with part 1902 of this chapter. All personnel employed to carry out the plan are to be hired under the Wyoming Personnel Merit System which conforms to standards established by the United States Civil Service Commission. The plan also contains a detailed description of the resources that are to be devoted to it.

[39 FR 15395, May 3, 1974, as amended at 50 FR 26558, June 27, 1985]

§ 1952.341 Developmental schedule.

(a) Adoption of Federal standards as State standards by February 1975.

(b) Administrative regulations for recordkeeping and reporting, variances, posting requirements, employee complaint procedures, inspections under the Act, employee exposure to toxic materials, providing information to employees on their exposure to hazards, personal protective equipment, medical examinations, and monitoring, safeguarding trade secrets, administrative review of citations, proposed penalties, and abatement periods, to become effective by June 1, 1974.

(c) Amendments to the Wyoming Administrative Procedure Act to be submitted to the State Legislature January 1975 and to become effective by May 1, 1975.

(d) Management Information System to be completed August 1, 1974.

(e) Merit staffing for administration of the program to be completed by August 15, 1974.

(f) Amendments to the State's Fair Employment Practices Act to be submitted to the State Legislature which convenes January 14, 1975.

[39 FR 15395, May 3, 1974. Redesignated at 50 FR 26558, June 27, 1985]

§ 1952.342 Completion of developmental steps and certification.

(a) In accordance with § 1952.343(a) the State adopted Federal standards covering all the issues contained in 29 CFR parts 1910 subparts D through S, and 1926 (The State will not cover parts 1915, 1916, 1917, and 1918). (40 FR 8948, Mar. 4, 1975; 41 FR 26767, June 29, 1976.)

(b) In accordance with the requirements of 29 CFR 1952.10 the Wyoming posters for private and public employees were approved by the Assistant Secretary on July 14, 1976.

(c) In accordance with § 1952.343(d), Wyoming has developed and implemented a Management Information System.

(d) The State plan has been amended to include an Affirmative Action Plan outlining the State's policy of equal employment opportunity.

(e) Guidelines and procedures for implementing the State's safety and health program for public employees were approved by the Assistant Secretary on June 1, 1978.

(f) In accordance with § 1952.343(b), Wyoming has promulgated its rules of practice and procedure which were approved by the Assistant Secretary on December 11, 1980.

(g) Legislation revising the enabling law to provide for civil enforcement of safety and health violations and revised regulations establishing procedures for review of enforcement actions was approved by the Assistant Secretary on December 19, 1980. (45 FR 83483)

(h) The State has met its plan commitment for hiring enforcement staff under an approved merit system for administration of its health and safety program pursuant to a July 3, 1980 memo from Don Owsley, Administrator of the Wyoming Occupational Health and Safety Department.

(i) As required by 29 CFR 1902.34(b)(3), the personnel operations of the Wyoming Occupational Health and Safety Department have been found to be in substantial conformity with the ''Standards for a Merit System of Personnel Administration'' by the Office of Personnel Management in a letter dated October 17, 1980.

(j) In accordance with § 1902.34 of this chapter, the Wyoming occupational safety and health plan was certified, effective December 30, 1980, as having completed all developmental steps specified in the plan as approved on April 25, 1974, on or before April 25, 1977. This certification attests to structural completion, but does not render judgment on adequacy of performance.

[41 FR 28789, July 13, 1976, as amended at 41 FR 30329, July 23, 1976; 42 FR 45907, Sept. 13, 1977; 43 FR 25424, June 13, 1978; 43 FR 34463, Aug. 4, 1978; 45 FR 83485, Dec. 19, 1980; 45 FR 85740, Dec. 30, 1980; 47 FR 1290, Jan. 12, 1982. Redesignated at 50 FR 26558, June 27, 1985]

§ 1952.343 Compliance staffing benchmarks.

Under the terms of the 1978 Court Order in *AFL-CIO* v. *Marshall*, Compliance staffing levels (benchmarks) necessary for a ''fully effective'' enforcement program were required to be established for each State operating an approved State plan. In September 1984 Wyoming, in conjunction with OSHA, completed a reassessment of the levels initially established in 1980 and proposed revised compliance staffing benchmarks of 6 safety and 2 health compliance officers. After opportunity for pulbic comment and service on the AFL-CIO, the Assistant Secretary approved these revised staffing requirements on June 27, 1985.

[50 FR 26558, June 27, 1985]

§ 1952.344 Final approval determination.

(a) In accordance with section 18(e) of the Act and procedures in 29 CFR part 1902, and after a determination that the State met the ''fully effective'' compliance staffing benchmarks as revised in 1984 in response to a Court Order in *AFL-CIO* v. *Marshall* (CA 74–406), and was satisfactorily providing reports to OSHA through participiption in the Federal-State Unified Management Information System, the Assistant Secretary evaluated actual operations under the Wyoming State plan for a period of at least one year following certification of completion of developmental steps (45 FR 85739). Based on the 18(e) Evaluation Report for the period of October 1982 through March 1984, and after opportunity for public comment, the Assistant Secretary determined that in operation the State of Wyoming's occupational safety health program is at least as effective as the Federal program in providing safe and healthful employment and places of employment and meets

the criteria for final State plan approval in section 18(e) of the Act and implementing regulations at 29 CFR part 1902. Accordingly, the Wyoming plan was granted final approval and concurrent Federal enforcement authority was relinquished under section 18(e) of the Act effective June 27, 1985.

(b) Except as otherwise noted, the plan which has received final approval covers all activities of employers and all places of employment in Wyoming. The plan does not cover private sector maritime employment; employment on the Warren Air Force Base; employment at the U.S. Department of Energy's Naval Petroleum and Oil Shale Reserve; Federal government employers and employees; the U.S. Postal Service (USPS), including USPS employees, and contract employees and contractor-operated facilities engaged in USPS mail operations; the enforcement of the field sanitation standard, 29 CFR 1928.110, and the enforcement of the temporary labor camps standard, 29 CFR 1910.142, with respect to any agricultural establishment where employees are engaged in ''agricultural employment'' within the meaning of the Migrant and Seasonal Agricultural Worker Protection Act, 29 U.S.C. 1802(3), regardless of the number of employees, including employees engaged in hand packing of produce into containers, whether done on the ground, on a moving machine, or in a temporary packing shed, except that Wyoming retains enforcement responsibility over agricultural temporary labor camps for employees engaged in egg, poultry, or red meat production, or the post-harvest processing of agricultural or horticultural commodities.

(c) Wyoming is required to maintain a State program which is at least as effective as operations under the Federal program; to submit plan supplements in accordance with 29 CFR part 1953; to allocate sufficient safety and health enforcement staff to meet the benchmarks for State staffing established by the U.S. Department of Labor, or any revisions to those benchmarks; and, to furnish such reports in such form as the Assistant Secretary may from time to time require.

[50 FR 26558, June 27, 1985, as amended at 62 FR 2564, Jan. 17, 1997; 65 FR 36628, June 9, 2000; 71 FR 36990, June 29, 2006]

§ 1952.345 Level of Federal enforcement.

(a) As a result of the Assistant Secretary's determination granting final approval of the Wyoming plan under section 18(e) of the Act, effective June 27, 1985, occupational safety and health standards which have been promulgated under section 6 of the Act do not apply with respect to issues covered under the Wyoming plan. This determination also relinquishes concurrent Federal OSHA authority to issue citations for violations of such standards under sections 5(a)(2) and 9 of the Act; to conduct inspections and investigations under section 8 (except those necessary to conduct evaluation of the plan under section 18(f) and other inspections, investigations, or proceedings necessary to carry out Federal responsibilities not specifically preempted by section 18(e)); to conduct enforcement proceedings in contested cases under section 10; to institute proceedings to correct imminent dangers under section 13; and to propose civil penalties or initiate criminal proceedings for violations of the Federal Act under section 17. The Assistant Secretary retains jurisdiction under the above provisions in any proceeding commenced under section 9 or 10 before the effective date of the 18(e) determination.

(b)(1) In accordance with section 18(e), final approval relinquishes Federal OSHA authority only with regard to occupational safety and health issues covered by the Wyoming plan. OSHA retains full authority over issues which are not subject to State enforcement under the plan. Thus, Federal OSHA retains its authority relative to safety and health in private sector maritime activities and will continue to enforce all provisions of the Act, Federal standards, rules, or orders, and all Federal standards, current or future, specifically directed to maritime employment (29 CFR Part 1915, shipyard employment; Part 1917, marine terminals; Part 1918, longshoring; Part

1919, gear certification) as well as provisions of general industry and construction standards (29 CFR Parts 1910 and 1926) appropriate to hazards found in these employments. Federal jurisdiction is retained and exercised by the Employment Standards Administration, U.S. Department of Labor, (Secretary's Order 5–96, dated December 27, 1996) with respect to the field sanitation standard, 29 CFR 1928.110, and the enforcement of the temporary labor camps standard, 29 CFR 1910.142, in agriculture, as described in § 1952.344(b). Federal jurisdiction is also retained for employment at Warren Air Force Base; employment at the U.S. Department of Energy's Naval Petroleum and Oil Shale Reserve; Federal government employers and employees; and the U.S. Postal Service (USPS), including USPS employees, and contract employees and contractor-operated facilities engaged in USPS mail operations.

(2) In addition, any hazard, industry, geographical area, operation or facility over which the State is unable to effectively exercise jurisdiction for reasons not related to the required performance or structure of the plan shall be deemed to be an issue not covered by the finally approved plan, and shall be subject to Federal enforcement. Where enforcement jurisdiction is shared between Federal and State authorities for a particular area, project, or facility, in the interest of administrative practicability, Federal jurisdiction may be assumed over the entire project or facility. In either of the two aforementioned circumstances, Federal enforcement may be exercised immediately upon agreement between Federal and State OSHA.

(c) Federal authority under provisions of the Act not listed in section 18(e) is unaffected by final approval of the plan. Thus, for example, the Assistant Secretary retains his authority under section 11(c) of the Act with regard to complaints alleging discrimination against employees because of the exercise of any right afforded to the employee by the Act, although such complaints may be referred to the State for investigation. The Assistant Secretary also retains his authority under section 6 of the Act to promulgate, modify or revoke occupational safety and health standards which address the working conditions of all employees, including those in States which have received an affirmative 18(e) determination, although such standards may not be Federally applied. In the event that the State's section 18(e) status is subsequently withdrawn and Federal authority reinstated, all Federal standards, including any standards promulgated or modified during the 18(e) period, would be Federally enforceable in that State.

(d) As required by section 18(f) of the Act, OSHA will continue to monitor the operations of the Wyoming State program to assure that the provisions of the State plan are substantially complied with and that the program remains at least as effective as the Federal program. Failure by the State to comply with its obligations may result in the revocation of the final determination under section 18(e), resumption of Federal enforcement, and/or proceedings for withdrawal of plan approval.

[50 FR 26559, June 27, 1985, as amended at 62 FR 2565, Jan. 17, 1997; 65 FR 36628, June 9, 2000; 71 FR 36991, June 29, 2006]

§ 1952.346 Where the plan may be inspected.

A copy of the principal documents comprising the plan may be inspected and copied during normal business hours at the following locations:

Office of State Programs, Occupational Safety and Health Administration, U.S. Department of Labor, 200 Constitution Avenue, NW, Room N3700, Washington, DC 20210;

Office of the Regional Administrator, Occupational Safety and Health Administration, U.S. Department of Labor, 1999 Broadway Suite 1690, Denver, Colorado 80202–5716; and

Office of the Assistant Administrator, Worker's Safety and Compensation Division, Wyoming Department of Employment, Herschler Building, 2nd Floor East, 122 West 25th Street, Cheyenne, Wyoming 82002.

[65 FR 36629, June 9, 2000]

§ 1952.347 Changes to approved plans.

In accordance with part 1953 of this chapter, the following Wyoming plan changes were approved by the Assistant Secretary:

(a) *Legislation*. (1) The State submitted amendments to its Occupational Health and Safety Act (Laws 1983, chapter 172), which became effective on May 27, 1983, modifying the powers and duties of the Occupational Health and Safety Commission, abolishing the powers of the review board and Commission to hear contested cases and establishing an independent hearing officer to hear contested cases, providing procedures for hearings and appeals whereby the Commission makes final administrative decisions in contested cases and the party adversely affected may appeal to the District Court, making penalties for posting violations discretionary (although the State guidelines on penalties for posting violations parallel OSHA's and are set forth in the Wyoming Operations Manual), requiring written notification to employers of their right to refuse entry, and creating the Department of Occupational Health and Safety. The Assistant Secretary approved these amendments on February 27, 1989.

(2) On March 29, 1994, the Assistant Secretary approved Wyoming's revised statutory penalty levels which are the same as the revised Federal penalty levels contained in section 17 of the Act as amended on November 5, 1990.

(b) *Regulations*. (1) The State submitted amendments to its Rules of Practice and Procedure pertaining to contested cases, hearings, discrimination, and petitions for modification of abatement; and making the regulations consistent with other statutory changes made to its Occupational Health and Safety Act which became effective on September 6, 1984, except amendment to Chapter IV, Enforcement which became effective on March 28, 1985. The Assistant Secretary approved these amendments on February 27, 1989.

(2) [Reserved]

(c) *The Voluntary Protection Program*. On October 24, 1996, the Assistant Secretary approved Wyoming's plan supplement which is generally identical to the Federal Voluntary Protection Program, with the exception of organizational and position titles.

(d) *Temporary labor camps/field sanitation*. Effective February 3, 1997, the Assistant Secretary approved Wyoming's plan amendment, dated July 19, 1996, relinquishing coverage for the issues of field sanitation (29 CFR 1928.110) and temporary labor camps (29 CFR 1910.142) in agriculture (except for agricultural temporary labor camps associated with egg, poultry or red meat production, or the post-harvest processing of agricultural or horticultural commodities.) The Employment Standards Administration, U.S. Department of Labor, has assumed responsibility for enforcement of these Federal OSHA standards in agriculture in Wyoming pursuant to Secretary of Labor's Order 5–96, dated December 27, 1996.

[54 FR 9045, Mar. 3, 1989, as amended at 59 FR 14556, Mar. 29, 1994; 61 FR 55099, Oct. 24, 1996; 62 FR 2565, Jan. 17, 1997]

Subpart CC—Arizona

§ 1952.350 Description of the plan as initially approved.

(a)(1) The plan identifies the Arizona Industrial Commission, Division of Occupational Safety and Health, as the State agency designated to administer the plan throughout the State. It adopts the definition of occupational safety and health issues expressed in § 1902.2(c)(1) of this chapter. The State intends to adopt all Federal standards except those found in 29 CFR parts 1915, 1916, 1917 and 1918 (ship repairing, shipbuilding, shipbreaking, and longshoring) and those subparts of parts 1910 and 1926 pertaining to industries which are not applicable to Arizona. In addition, the State intends to enforce elevator (ANSI) and boiler pressure vessel (ASME) standards for which there are no Federal counterparts.

(2) The plan provides a description of personnel employed under a merit system; the coverage of employees of political subdivisions; procedures for the development and promulgation of standards, including standards for the protection of employees against new and unforeseen hazards; and procedures for the prompt restraint or elimination of imminent danger situations.

(b)(1) The plan includes legislation enacted by the Arizona Legislature during its 1974 legislative session

amending title 23, article 10 of the Arizona Revised Statutes to bring them into conformity with the requirements of part 1902 of this chapter. Under the legislation the Industrial Commission will have full authority to enforce and administer laws respecting the safety and health of employees in all workplaces of the State.

(2) The legislation is intended, among other things, to assure inspections in response to employee complaints; give employer and employee representatives an opportunity to accompany inspectors in order to aid inspections; notification of employees or their representatives when no compliance action is taken as a result of alleged violations; notification of employees of their protections and obligations; protection of employees against discharge or discrimination in terms and conditions of employment; adequate safeguards to protect trade secrets; sanctions against employers for violations of standards and orders; employer right of review to an Occupational Safety and Health Review Board and then the courts, and employee participation in review proceedings. The plan also proposes a program of voluntary compliance by employers and employees, including a provision for on-site consultation. The State's consultation program should not detract from its enforcement program and the State has given assurances that it will meet the conditions set forth in the Washington Decision (38 FR 2421, January 26, 1973).

(c) The Arizona Plan includes the following documents as of the date of approval:

(1) The plan description documents, in two volumes.

(2) A copy of the enabling legislation as amended and enacted by the State Legislature in its 1974 Session.

(3) Letters from Donald G. Wiseman, Director of the Division of Occupational Safety and Health of the Arizona Industrial Commission to Barry J. White, Associate Assistant Secretary for Regional Programs on October 15, 18, and 24, 1974 submitting information, clarifications, and revisions on several issues raised during the review process, including proposals to be submitted to the Arizona Legislature during its 1975 Session.

[39 FR 39038, Nov. 5, 1974, as amended at 50 FR 25571, June 20, 1985]

§ 1952.351 Developmental schedule.

The Arizona State plan is developmental. The following is the developmental schedule as provided by the plan:

(a) Development of a complete management information and control system by July 1, 1976.

(b) The formulation and approval of inter-agency agreements with the Arizona Atomic Energy Commission, the State Health Department and the Arizona Corporation Commission by March 1, 1975.

(c) Promulgation of variance regulations by July 1, 1977.

(d) The promulgation of recordkeeping regulations by March 1, 1975, but full implementation of these regulations will not be until July 1, 1976.

(e) The submission of legislative amendments to the Arizona Legislature during its 1977 Session.

[39 FR 39038, Nov. 5, 1974, as amended at 40 FR 11873, Mar. 14, 1975; 41 FR 56315, Dec. 28, 1976. Redesignated at 50 FR 25571, June 20, 1985]

§ 1952.352 Completion of developmental steps and certification.

(a) Implementation of the Arizona occupational safety and health program began on March 1, 1975.

(b) Inter-agency agreements between the Arizona Industrial Commission and the Arizona Department of Health Services were finalized on November 7, 1974, and March 20, 1975.

(c) Regulations concerning inspections, citations and proposed penalties and the Rules of Procedure for contests before the Governor's Review Board were promulgated on February 28, 1975.

(d) Recordkeeping and reporting regulations were promulgated on March 1, 1975; however, these regulations will not be applicable to public employers until January 1, 1977.

(e) The universe file system for the inspections scheduling system was completed and implemented on March 12, 1976.

(f) An interagency agreement was entered into between the Corporation

Commission of Arizona and the Industrial Commission on May 7, 1976 and became effective May 10, 1076.

(g) In accordance with the requirements of § 1952.10, the Arizona State poster was approved by the Assistant Secretary on July 22, 1976.

(h) Arizona occupational safety and health standards comparable to Federal standards in effect as of July 28, 1974, were promulgated on February 28, 1975, and were approved by the Regional Administrator effective August 6, 1976.

(i) In accordance with § 1902.34 of this chapter, the Arizona occupational safety and health plan was certified, effective September 18, 1981 as having completed all developmental steps specified in the plan as approved on October 29, 1974, on or before November 1, 1977. This certification attests to structural completion, but does not render judgment on adequacy of performance.

(j) Regulations concerning discrimination complaints were promulgated on September 22, 1977, and were approved by the Assistant Secretary on November 13, 1980.

(k) Legislative amendments required to bring the Arizona occupational safety and health law (Arizona Revised Statutes, Chapter 23) into conformity with Federal requirements were enacted effective August 27, 1977.

[41 FR 31813, July 30, 1976, as amended at 41 FR 34251, Aug. 13, 1976; 41 FR 56316, Dec. 28, 1976; 46 FR 20164, Apr. 3, 1981; 46 FR 32022, June 19, 1981; 46 FR 46322, Sept. 18, 1981. Redesignated at 50 FR 25571, June 20, 1985]

§ 1952.353 Compliance staffing benchmarks.

Under the terms of the 1978 Court Order in *AFL-CIO* v. *Marshall*, compliance staffing levels (benchmarks) necessary for a ''fully effective'' enforcement program were required to be established for each State operating an approved State plan. In September 1984, Arizona in conjunction with OSHA, completed a reassessment of the levels initially established in 1980 and proposed revised compliance staffing benchmarks of 9 safety and 6 health compliance officers. After opportunity for public comment and service on the AFL-CIO, the Assistant Secretary approved these revised staffing requirements on June 20, 1985.

[50 FR 25571, June 20, 1985]

§ 1952.354 Final approval determination.

(a) In accordance with section 18(e) of the Act and procedures in 29 CFR part 1902, and after a determination that the State met the ''fully effective'' compliance staffing benchmarks as revised in 1984 in response to a Court Order in *AFL-CIO* v. *Marshall*, (CA 74–406), and was satisfactorily providing reports to OSHA through participation in the Federal-State Unified Management Information System, the Assistant Secretary evaluated actual operations under the State plan for a period of at least one year following certification of completion of developmental steps (46 FR 46320). Based on the 18(e) Evaluation Report (October 1982–March 1984) and after opportunity for public comment, the Assistant Secretary determined that, in operation, the State of Arizona's occupational safety and health program is at least as effective as the Federal program in providing safe and healthful employment and places of employment and meets the criteria for final State plan approval in section 18(e) of the Act and implementing regulations at 29 CFR part 1902. Accordingly, the Arizona plan was granted final approval and concurrent Federal enforcement authority was relinquished under section 18(e) of the Act effective June 20, 1985.

(b) Except as otherwise noted, the plan which has received final approval covers all activities of employers and all places of employment in Arizona. The plan does not cover private sector maritime employment; Federal government employers and employees; enforcement relating to any contractors or subcontractors on any Federal establishment where the land is determined to be exclusive Federal jurisdiction; the U.S. Postal Service (USPS), including USPS employees, and contract employees and contractor-operated facilities engaged in USPS mail operations; copper smelters; concrete and asphalt batch plants that are physically connected to a mine or so interdependent with a mine as to form one

integral enterprise; and Indian reservations.

(c) Arizona is required to maintain a State program which is at least as effective as operations under the Federal program; to submit plan supplements in accordance with 29 CFR part 1953; to allocate sufficient safety and health enforcement staff to meet the benchmarks for State staffing established by the U.S. Department of Labor, or any revision to those benchmarks; and, to furnish such reports in such form as the Assistant Secretary may from time to time require.

[50 FR 25571, June 20, 1985, as amended at 63 FR 53281, Oct. 5, 1998; 65 FR 36629, June 9, 2000]

§ 1952.355 Level of Federal enforcement.

(a) As a result of the Assistant Secretary's determination granting final approval of the Arizona plan under section 18(e) of the Act, effective June 20, 1985, occupational safety and health standards which have been promulgated under section 6 of the Act do not apply with respect to issues covered under the Arizona plan. This determination also relinquishes concurrent Federal OSHA authority to issue citations for violation of such standards under sections 5(a)(2) and 9 of the Act; to conduct inspections and investigations under section 8 (except those necessary to conduct evaluation of the plan under section 18(f) and other inspections, investigations, or proceedings necessary to carry out Federal responsibilities not specifically preempted by section 18(e)); to conduct enforcement proceedings in contested cases under section 10; to institute proceedings to correct imminent dangers under section 13; and to propose civil penalties or initiate criminal proceedings for violations of the Federal Act under section 17. The Assistant Secretary retains jurisdiction under the above provisions in any proceeding commenced under section 9 or 10 before the effective date of the 18(e) determination.

(b)(1) In accordance with section 18(e), final approval relinquishes Federal OSHA authority only with regard to occupational safety and health issues covered by the Arizona plan. OSHA retains full authority over issues which are not subject to State enforcement under the plan. Thus, Federal OSHA retains its authority relative to safety and health in private sector maritime activities and will continue to enforce all provisions of the Act, rules or orders, and all Federal standards, current or future, specifically directed to maritime employment (29 CFR Part 1915, shipyard employment; Part 1917, marine terminals; Part 1918, longshoring; Part 1919, gear certification) as well as provisions of general industry and construction standards (29 CFR Parts 1910 and 1926) appropriate to hazards found in these employments. Federal jurisdiction is also retained with respect to Federal government employers and employees; enforcement relating to any contractors or subcontractors on any Federal establishment where the land is determined to be exclusive Federal jurisdiction; the U.S. Postal Service (USPS), including USPS employees, and contract employees and contractor-operated facilities engaged in USPS mail operations; in copper smelters; in concrete and asphalt batch plants which are physically connected to a mine or so interdependent with the mine as to form one integral enterprise; and within Indian reservations.

(2) In addition, any hazard, industry, geographical area, operation or facility over which the State is unable to effectively exercise jurisdiction for reasons not related to the required performance or structure of the plan shall be deemed to be an issue not covered by the finally approved plan, and shall be subject to Federal enforcement. Where enforcement jurisdiction is shared between Federal and State authorities for a particular area, project, or facility, in the interest of administrative practicability, Federal jurisdiction may be assumed over the entire project or facility. In either of the two aforementioned circumstances, Federal enforcement may be exercised immediately upon agreement between Federal and State OSHA.

(c) Federal authority under provisions of the Act not listed in section 18(e) is unaffected by final approval of the plan. Thus, for example, the Assistant Secretary retains his authority

under section 11(c) of the Act with regard to complaints alleging discrimination against employees because of the exercise of any right afforded to the employee by the Act, although such complaints may be referred to the State for investigation. The Assistant Secretary also retains his authority under section 6 of the Act to promulgate, modify or revoke occupational safety and health standards which address the working conditions of all employees, including those in States which have received an affirmative 18(e) determination, although such standards may not be Federally applied. In the event that the State's 18(e) status is subsequently withdrawn and Federal authority reinstated, all Federal standards, including any standards promulgated or modified during the 18(e) period, would be federally enforceable in that State.

(d) As required by section 18(f) of the Act, OSHA will continue to monitor the operations of the Arizona State program to assure that the provisions of the State plan are substantially complied with and that the program remains at least as effective as the Federal program. Failure by the State to comply with its obligations may result in the revocation of the Final determination under section 18(e), resumption of Federal enforcement, and/or proceedings for withdrawal of plan approval.

[50 FR 25571, June 20, 1985, as amended at 63 FR 53281, Oct. 5, 1998; 65 FR 36629, June 9, 2000]

§ 1952.356 Where the plan may be inspected.

A copy of the principal documents comprising the plan may be inspected and copied during normal business hours at the following locations:

Office of State Programs, Occupational Safety and Health Administration, U.S. Department of Labor, 200 Constitution Avenue, NW, Room N3700, Washington, DC 20210;

Office of the Regional Administrator, Occupational Safety and Health Administration, U.S. Department of Labor, 71 Stevenson Street, 4th Floor, San Francisco, California 94105; and

Office of the Director, Industrial Commission of Arizona, 800 W. Washington, Phoenix, Arizona 85007.

[65 FR 36629, June 9, 2000]

§ 1952.357 Changes to approved plans.

(a) *The Voluntary Protection Program.* On December 30, 1993, the Assistant Secretary approved Arizona's plan supplement, which is generally identical to the Federal Voluntary Protection Programs with the exception that the State's VPP is limited to the Star Program in general industry, excludes the Merit and Demonstration Programs and excludes the construction industry.

(b) *Legislation.* (1) On March 29, 1994, the Assistant Secretary approved Arizona's revised statutory penalty levels which are the same as the revised Federal penalty levels contained in section 17 of the Act as amended on November 5, 1990.

(2) [Reserved]

[59 FR 2295, Jan. 14, 1994, as amended at 59 FR 14556, Mar. 29, 1994]

Subpart DD—New Mexico

§ 1952.360 Description of the plan as initially approved.

(a)(1) The plan identifies the New Mexico Environmental Improvement Agency, with its subordinate organization, the Occupational and Radiation Protection Division, as the State agency designated to administer the plan throughout the State. It adopts the definition of occupational safety and health issues expressed in § 1909.2(c)(1) of this chapter. The State has adopted the Federal Field Operations Manual and all the Federal standards except those found in 29 CFR parts 1915, 1916, 1917, and 1918 (ship repairing, shipbuilding, shipbreaking, and longshoring). In addition, the Occupational and Radiation Protection Division will be enforcing State standards under the Radiation Protection Act (chapter 284, Laws of 1971, 12–9–1 through 12–9–11, New Mexico Statutes Annotated). However, since this Act provides protection to the general public, in the event of conflict between Radiation Protection Act standards and

occupational safety and health standards, employees will receive the protection provided under the more stringent regulation.

(2) The plan provides a description of personnel employed under a merit system; the coverage of employees of political subdivisions; procedures for the development and promulgation of standards, including standards for the protection of employees against new and unforeseen hazards; and procedures for the prompt restraint of imminent danger situations.

(b)(1) The plan includes legislation enacted by the New Mexico Legislature during its 1975 legislative session amending chapter 63, Laws of 1972, 59–14–1 through 59–14–23 of the New Mexico Statutes Annotated to bring them into conformity with the requirements of part 1902 of this chapter. Under the legislation, the Environmental Improvement Agency will have full authority to enforce and administer laws respecting the safety and health of employees in all workplaces of the State.

(2) The legislation is intended, among other things, to assure inspections in response to employee complaints; give employer and employee representatives an opportunity to accompany inspectors in order to aid inspections; notify employees of their protections and obligations; protect employees against discharge or discrimination in terms and conditions of employment; provide adequate safeguards to protect trade secrets; impose sanctions against employers for violations of standards and orders; insure employer right of review to an Occupational Health and Safety Review Commission and then the courts, and employee participation in the review proceedings. The plan also proposes a program of voluntary compliance by employers and employees, including a provision for on-site consultation. The State's consultation program will not detract from its enforcement program and the State's consultation program will meet the conditions set forth in the Washington Decision (38 FR 2421, January 26, 1973).

(c) The New Mexico Plan includes the following documents as of the date of approval:

(1) The plan description documents, in one volume.

(2) A copy of the enabling legislation as amended by the State legislature in its 1975 session.

(3) A letter from Aaron Bond, Director of the New Mexico Environmental Improvement Agency, to Barry J. White, Associate Assistant Secretary for Regional Programs, dated November 4, 1975, submitting information, clarification, and revisions on several issues raised during the review process, including proposals to be submitted to the New Mexico Legislature prior to the close of its 1977 legislative session.

[40 FR 57456, Dec. 10, 1975, as amended at 59 FR 42496, Aug. 18, 1994]

§ 1952.361 Developmental schedule.

The New Mexico State Plan is developmental. The following is the developmental schedule as provided by the plan:

(a) Development of a complete and operating management information and control system by January 1, 1976.

(b) Submission of the State's occupational safety and health poster for approval by January 31, 1976.

(c) Promulgation of Rules of Procedures for administrative review by the New Mexico Occupational Health and Safety Review Commission by January 31, 1976.

(d) Enforcement program to achieve operational status by December 1, 1976.

(e) Amendments to basic legislation to become effective by July 1, 1977.

(f) Public employee program to become operational by July 1, 1977.

[40 FR 57456, Dec. 10, 1975. Redesignated at 59 FR 42496, Aug. 18, 1994]

§ 1952.362 Completion of developmental steps and certification.

(a) In accordance with the requirements of § 1952.10, the New Mexico State poster was approved by the Assistant Secretary on July 2, 1976. A revised State poster reflecting legislative amendments and procedural changes was submitted on May 10, 1983, and approved by the Assistant Secretary on October 30, 1984.

(b) In accordance with the intent of 29 CFR 1952.363(e), on December 20, 1977, and June 3, 1983, New Mexico submitted procedural guidelines for its two-tier contested case procedures in lieu of

legislative amendments. The procedures establish maximum timeframes for completion of the first level, informal administrative review of contested cases, and immediate docketing of cases with the New Mexico Occupational Health and Safety Review Commission. A second 15 day contest period is provided for employer/employee appeal directly to the Review Commission. The New Mexico Occupational Health and Safety Act (section 50–9–1 *et seq.*, NMSA 1978) was amended in 1978, 1983 and 1984. These amendments deal with the imposition of penalties for serious violations by governmental entities; the private questioning of employees and employers by the Environmental Improvement Division officials at the worksite; the jurisdiction of the Environmental Improvement Division over working conditions in copper smelters; the use of interview statements as evidence in a civil or enforcement action; and the State's adoption of emergency temporary standards. These clarifications and legislative amendments were approved by the Assistant Secretary on October 30, 1984.

(c) In accordance with 29 CFR 1952.363(a), New Mexico submitted documentation on establishment of its Management Information System on August 18, 1976, and June 3, 1983. The June 3, 1983, amendment specifies New Mexico's participation in OSHA's Unified Management Information System. These supplements were approved by the Assistant Secretary on October 30, 1984.

(d) In accordance with 29 CFR 1952.363(c), New Mexico promulgated Review Commission Rules of Procedures on October 1, 1976. On January 11, 1984, New Mexico submitted revised Review Commission Rules of Procedures which parallel 29 CFR part 2200. The revised rules were approved by the Assistant Secretary on October 30, 1984.

(e) In accordance with 29 CFR 1952.363(d), New Mexico submitted documentation on December 20, 1977, showing that its enforcement program was operational effective June, 1976. The supplement was approved by the Assistant Secretary on October 30, 1984.

(f) In accordance with 29 CFR 1952.363(f), New Mexico by letter dated December 20, 1977, submitted a plan supplement regarding its development of an occupational health and safety program for public employees in June, 1976. A revision thereto was submitted on February 28, 1980. These supplements were approved by the Assistant Secretary on October 30, 1984.

(g) New Mexico regulations for recording and reporting occupational injuries and illnesses parallel to 29 CFR part 1904 which were originally promulgated on August 8, 1975, were revised on February 19, 1979, June 1, 1981, and October 26, 1983. The revised regulations were approved by the Assistant Secretary on October 30, 1984.

(h) New Mexico regulations for inspections, citations and proposed penalties parallel to 29 CFR part 1903 originally promulgated on August 8, 1975, were revised on April 14, 1981; May 10, 1981; May 27, 1981; June 1, 1981; April 6, 1982; May 11, 1983; June 8, 1983; June 14, 1983; and April 4, 1984. The revised regulations were approved by the Assistant Secretary on October 30, 1984.

(i) New Mexico rules of practice for variances, limitations, variations, tolerances and exemptions parallel to 29 CFR part 1905 which were originally promulgated on August 8, 1975, were revised on April 14, 1981. Subsequently, on June 18, 1981, and May 11, 1983, the State submitted amendments and assurances to its Field Operations Manual. These supplements were approved by the Assistant Secretary on October 30, 1984.

(j) New Mexico promulgated regulations for on-site consultation on March 7, 1979 and June 1, 1981 with an amendment dated October 17, 1983 and assurances dated April 4, 1984 and July 10, 1984. These supplements were approved by the Assistant Secretary on October 30, 1984.

(k) New Mexico adopted discrimination provisions parallel to 29 CFR part 1977 on March 29, 1982, with an amendment dated June 15, 1983. These supplements were approved by the Assistant Secretary on October 30, 1984.

(l) New Mexico submitted its field operations manual on May 16, 1980, with subsequent amendments dated March 4, 1983; May 11, 1983; May 23, 1983; June 8, 1983; June 16, 1983; June 17, 1983; and June 27, 1983. The manual reflects changes in the Federal program

through March 1983. On July 25, 1980, with a subsequent amendment dated July 24, 1984, the State adopted Federal OSHA's Industrial Hygiene Manual. These supplements were approved by the Assistant Secretary on October 30, 1984.

(m) New Mexico on February 28, 1980, submitted a supplement containing a revised plan narrative with further revisions dated June 16, 1983; June 21, 1983; June 27, 1983, April 4, 1984, and July 24, 1984. These supplements were approved by the Assistant Secretary on October 30, 1984.

(n) In accordance with § 1902.34 of this chapter, the New Mexico Occupational Health and Safety plan was certified effective December 4, 1984, as having completed all developmental steps specified in the plan as approved on December 4, 1975, on or before December 4, 1978. This certification attests to structural completion, but does not render judgment on adequacy of performance.

[49 FR 44205, Nov. 5, 1984, as amended at 49 FR 48918, Dec. 17, 1984. Redesignated at 59 FR 42497, Aug. 18, 1994]

§ 1952.363 Compliance staffing benchmarks.

Under the terms of the 1978 Court Order in *AFL-CIO* v. *Marshall*, compliance staffing levels (''benchmarks'') necessary for a ''fully effective'' enforcement program were required for each State operating an approved State plan. In May 1992, New Mexico completed, in conjunction with OSHA, a reassessment of the staffing levels initially established in 1980 and proposed revised benchmarks of 7 safety and 3 health compliance officers. After opportunity for public comment and service on the AFL-CIO, the Assistant Secretary approved these revised staffing requirements on August 11, 1994.

[59 FR 42497, Aug. 18, 1994]

§ 1952.364 [Reserved]

§ 1952.365 Level of Federal enforcement.

(a) Pursuant to §§ 1902.20(b)(1)(iii) and 1954.3 of this chapter, under which an operational status agreement has been entered into between OSHA and New Mexico, effective October 5, 1981, and based on a determination that New Mexico is operational in issues covered by the New Mexico occupational health and safety plan, discretionary Federal enforcement authority under section 18(e) of the Act (29 U.S.C. 667(e)) will not be initiated with regard to Federal occupational safety and health standards in issues covered under 29 CFR parts 1910, 1926 and 1928 except as provided in this section. The U.S. Department of Labor will continue to exercise authority, among other things, with regard to:

(1) Complaints filed with the U.S. Department of Labor alleging discrimination under section 11(c) of the Act (29 U.S.C. 660(c));

(2) Enforcement with respect to private sector maritime employment including 29 CFR parts 1915, 1917, 1918, 1919 (shipyard employment; marine terminals; longshoring and gear certification), and general industry and construction standards (29 CFR parts 1910 and 1926) appropriate to hazards found in these employments, which issues have been specifically excluded from coverage under the State plan;

(3) Enforcement in situations where the State is refused and is unable to obtain a warrant or enforce its right of entry;

(4) Enforcement of new Federal standards until the State adopts a comparable standard;

(5) Enforcement of unique and complex standards as determined by the Assistant Secretary;

(6) Enforcement in situations when the State is temporarily unable to exercise its enforcement authority fully or effectively;

(7) Enforcement of occupational safety and health standards at all Federal and private sector establishments on military facilities and bases, including but not limited to Kirkland Air Force Base, Fort Bliss Military Reservation, White Sands Missile Range Military Reservation, Holloman Air Force Base, Cannon Air Force Base, Fort Wingate Military Reservation , Fort Bayard Veterans' Hospital, Albuquerque Veterans' Hospital, Santa Fe National Cemetery;

(8) Enforcement of occuaptional safety and health standards, to the extent permitted by applicable law, over tribal or private sector employment within

any Indian reservation and lands under the control of a tribal government;

(9) Enforcement of occupational safety and health standards with regard to employment at the U.S. Department of Energy's Western Area Power Administration site at Elephant Butte; Federal government employers and employees; and the U.S. Postal Service (USPS), including USPS employees and contract employees and contractor-operated facilities engaged in USPS mail operations; and

(10) Investigations and inspections for the purpose of the evaluation of the New Mexico plan under sections 18(e) and (f) of the Act (29 U.S. C. 667 (e) and (f)).

(b) The Regional Administrator for Occupational Safety and Health will make a prompt recommendation for the resumption of the exercise of Federal enforcement authority under section 18(e) of the Act (29 U.S.C. 667(e)) whenever, and to the degree, necessary to assure occupational safety and health protection to employees in New Mexico.

[62 FR 49911, Sept. 24, 1997, as amended at 65 FR 36629, June 9, 2000; 71 FR 36991, June 29, 2006]

§ 1952.366 Where the plan may be inspected.

A copy of the principal documents comprising the plan may be inspected and copied during normal business hours at the following locations:

Office of State Programs, Occupational Safety and Health Administration, U.S. Department of Labor, 200 Constitution Avenue, N.W., Room N3700, Washington, D.C. 20210;

Office of the Regional Administrator, Occupational Safety and Health Administration, U.S. Department of Labor, Room 602, 525 Griffin Street, Dallas, Texas 75202; and

New Mexico Environment Department, Occupational Safety and Health Bureau, 1190 St. Francis Drive, Santa Fe, New Mexico 87502.

[59 FR 42497, Aug. 18, 1994]

§ 1952.367 Changes to approved plans.

(a) *Legislation.* (1) On March 29, 1994, the Assistant Secretary approved New Mexico's revised statutory penalty levels which are the same as the revised Federal penalty levels contained in section 17 of the Act as amended on November 5, 1990.

(2) [Reserved]

(b) In accordance with part 1953 of this chapter, New Mexico's State plan amendment, dated January 3, 1997, excluding coverage of all private sector employment on Federal military facilities and bases (*see* § 1952.365), and, to the extent permitted by applicable law, over tribal or private sector employment within any Indian reservation and lands under the control of a tribal government, from its State plan was approved by the Acting Assistant Secretary on September 24, 1997.

[59 FR 14556, Mar. 29, 1994. Redesignated at 59 FR 42496, Aug. 18, 1994, as amended at 62 FR 49911, Sept. 24, 1997; 67 FR 60129, Sept. 25, 2002]

Subpart EE—Virginia

§ 1952.370 Description of the plan as initially approved.

(a) The Virginia Department of Labor and Industry is the agency responsible for administering the plan and the Virginia Department of Health is designated as responsible for occupational health matters. The plan defines the covered occupational safety and health issues as defined by the Secretary of Labor in 29 CFR 1902.2(c)(1) and all safety and health standards adopted by the Secretary of Labor, except those found in 29 CFR parts 1915, 1916, 1917, and 1918 (ship repairing, shipbuilding, shipbreaking and longshoring), will be enforced by the State upon approval of the plan by the Assistant Secretary. The State will retain its existing standard applicable to ionizing radiation. New Federal standards will be adopted by the Safety and Health Codes Commission within 6 months after Federal promulgation.

(b)(1) The plan includes enabling legislation passed by the Virginia legislature in February 1973, and amendments thereto enacted in 1975 and 1976. The Commissioner of the Department of Labor and Industry will have authority to enforce and adminster laws regarding the safety and health of employees. Safety inspections will be conducted by the Department of Labor and Industry whereas health inspections will be conducted by the Department of Health.

The Department of Labor and Industry will issue citations, set abatement dates, and issue summons and/or warrants for a civil district court determination of violations and assessment of proposed penalties for such safety and health violations. Appeals of the district court's determination shall be to the circuit court sitting without a jury. Fire safety inspections and enforcement will be provided by agreement with the State Fire Marshal. The State plan provides for the coverage of all employees including coverage of public employees within the Commonwealth with the exception of maritime workers, employees of the United States, and employees whose working conditions are regulated by Federal agencies other than the U.S. Department of Labor under section 4(b)(1) of the Occupational Safety and Health Act of 1970. The Commissioner is authorized to establish a program applicable to employees of the State and its political subdivisions.

(2) The legislation also insures inspections in response to employee complaints; right of employer and employee representatives to accompany inspectors; notification to employees or their representatives when no compliance action is taken as a result of alleged violations; notification to employees of their protections and obligations; protection of employees against discharge or discrimination in terms and conditions of employment; adequate safeguards to protect trade secrets; prompt notice to employers and employees of alleged violations of standards and abatement requirements; effective sanctions against employers for violations of rules, regulations, standards and orders; employee right of review in the State civil courts and employee participation in this judicial review process. In addition, there is provision for prompt restraint of imminent danger situations by injunction and ''red-tag'' procedures. The plan also proposes to develop a program to encourage voluntary compliance by employers and employees, including provision for onsite consultation, which program will not detract from its enforcement program.

(c) The plan sets out goals and provides a timetable for bringing it into conformity with part 1902 of this chapter at the end of three years after commencement of operations under the plan. The plan also includes the State Administrative Process Act. A merit system of personnel administration will be utilized.

(d) The plan includes the following documents as of the date of approval:

(1) The plan document and appendices including revised legislation, submitted June 21, 1976.

(2) Letters from the Department of Labor and Industry dated January 15, March 4, and August 23, 1976, and from the Department of Health dated August 18, 1976.

[41 FR 42658, Sept. 28, 1976, as amended at 51 FR 2489, Jan. 17, 1986]

§ 1952.371 Developmental schedule.

The Virginia plan is developmental. Following is a schedule of major developmental steps:

(a) Standards identical to the Federal standards will be completely adopted by January 1, 1978.

(b) A plan for delegation of authority to the State Fire Marshal for fire standards development and enforcement will be completed by December 31, 1976, with necessary legislative action and program implementation by July 1, 1978.

(c) State poster(s) informing public and private employees of their rights and responsibilities will be developed and distributed within 6 months of plan approval.

(d) A voluntary compliance program (including on-site consultation services) will be initiated within 6 months of plan approval.

(e) Both safety and health conpliance programs will be fully staffed by FY 1979.

(f) Both safety and health consultation programs will be fully staffed by FY 1979.

(g) An automated Management Information System, including a court reporting system, will be developed within 6 months of plan approval.

(h) An Administrative Procedures Manual which will contain State regulations on standards promulgation, inspections, citations, proposal of penalties, review procedures, variances,

etc., will be developed within 6 months of plan approval.

(i) A Compliance Manual establishing procedures to be used by safety and health inspectors and voluntary compliance personnel will be developed within 6 months of plan approval.

(j) The State is now responsible for enforcement of the State explosive code. That code will be amended within 6 months of plan approval to contain only standards identical to OSHA's standards.

(k) Job descriptions for both safety and health personnel will be reviewed and revised to accurately reflect job functions within 12 months of plan approval.

(l) The Directors of the Industry and Construction Safety Divisions in the Department of Labor and Industry will be brought under State merit system coverage by January 1, 1977.

(m) An inspection scheduling system will be developed for the health program within 6 months of plan approval and for the safety program within 8 months of plan approval.

(n) A public employee program will be developed and implemented within 6 months of plan approval.

[41 FR 42658, Sept. 28, 1976, as amended at 42 FR 10989, Feb. 25, 1977. Redesignated at 51 FR 2489, Jan. 17, 1986]

§ 1952.372 Completion of developmental steps and certification.

(a) In accordance with 29 CFR 1952.373(b), Virginia was to develop a plan for delegation of authority to the State Fire Marshal for fire standards enforcement. The State has since announced that the authority for fire standards enforcement will rest with the Department of Labor and Industry, which has been enforcing fire standards since plan approval. This action is judged to have sufficiently fulfilled the commitments of this step.

(b) In accordance with 29 CFR 1952.373(c) and 1952.10. Virginia's safety and health posters for public and private employers were approved by the Assistant Secretary on November 13, 1980.

(c) In accordance with 29 CFR 1952.373(d), Virginia initiated a voluntary compliance program which includes on-site consultation services on March 15, 1977. (The State subsequently arranged for on-site consultation activities for the private sector to be covered by an agreement with the U.S. Department of Labor under section 7(c)(1) of the Act).

(d) In accordance with 29 CFR 1952.373(f), the State had met its developmental commitment for the staffing of its on-site consultation program in the public sector by fiscal year 1979. On-site consultation in the private sector is covered by a section 7(c)(1) agreement with the U.S. Department of Labor.

(e) In accordance with the relevant part of 29 CFR 1952.373(g), Virginia met its developmental commitment of developing and implementing an automated Management Information System on July 1, 1977.

(f) In accordance with 29 CFR 1952.373(l), the Directors of the Industry and the Construction Safety Divisions have been placed under the State merit system as of September 1, 1976.

(g) In accordance with 29 CFR 1952.373(a), Virginia was to completely adopt standards identical to the Federal standards by January 1, 1978. State standards identical to the Federal standards of 29 CFR part 1910 (General Industry) and part 1926 (Construction) and as effective as the Federal standards for ionizing radiation exposure became effective on April 15, 1977, and were approved by the Regional Administrator in the FEDERAL REGISTER of March 17, 1978 (43 FR 11274). State standards identical to the Federal standards in 29 CFR part 1928 (Agriculture) became effective on April 1, 1978, and were approved by the Regional Administrator in the FEDERAL REGISTER of June 12, 1979 (44 FR 3375). The State's subsequent adoption of standards identical to the Federal standards for ionizing radiation exposure was approved on August 20, 1982 (47 FR 36485). The State has continued to adopt standards, amendments and corrections identical to the Federal, as noted in separate standards approval notices.

(h) In accordance with 29 CFR 1952.373(e), the State met its developmental commitment for the staffing of its compliance program by Fiscal Year 1979 with the submission of its Fiscal

Year 1979 grant application on August 11, 1978, which allocated 38 safety and 18 health compliance officer positions. This supplement was approved by the Assistant Secretary on October 14, 1983.

(i) In accordance with 29 CFR 1952.373(g), Virginia met its developmental commitment for the development and implementation of a system for the reporting of court decisions resulting from the State's system for the judicial review of contested cases with the submission of a publication on May 27, 1981, which compiled final orders and decisions regarding cases contested to the Virginia General District and Circuit Courts. The State has subsequently submitted other compilations which are to be published annually. This amendment was approved by the Assistant Secretary on October 14, 1983.

(j) In accordance with 29 CFR 1952.373(j), Virginia submitted revised standards for explosives and blasting agents on March 23, 1977, which were found to be identical to the Federal standards and were approved by the Regional Administrator in the FEDERAL REGISTER of March 17, 1978 (43 FR 11274).

(k) In accordance with 29 CFR 1952.373(k), the State met its developmental commitment of reviewing and revising job descriptions for both safety and health personnel with the submission of revised job specifications on October 5, 1977. This supplement was approved by the Assistant Secretary on October 14, 1983.

(l) In accordance with 29 CFR 1952.373(m), Virginia submitted inspection scheduling systems for its health and safety programs on September 7 and November 2, 1977, and a revised health scheduling system on May 9, 1979. The State has subsequently adopted revisions identical to revisions to the Federal scheduling system for safety as well as health inspections with submissions dated December 11, 1980, October 30, 1981, and May 28, 1982. These amendments were approved by the Assistant Secretary on October 14, 1983.

(m) In accordance with 29 CFR 1952.373(h), Virginia submitted an administrative procedures manual containing State rules and regulations on standards promulgation, inspections, recordkeeping and reporting of occupational injuries and illnesses, nondiscrimination, citations, proposal of penalties, review procedures, variances, etc., on March 31, 1977. The State has subsequently submitted revised versions of and clarifications to the manual by letters dated September 8, 1978, May 26, 1981, November 12, 1982, January 20, 1983, March 16, 1983 and September 13, 1983 in response to OSHA comments, and these actions are adjudged to have sufficiently fulfilled the commitments of this step. The Virginia Occupational Safety and Health Administrative Regulations Manual (which became effective on October 31, 1983 and was clarified by a letter dated June 13, 1984) was approved by the Assistant Secretary on August 15, 1984.

(n) In accordance with 29 CFR 1952.373(i), the State was to develop a compliance manual establishing procedures to be used by safety and health compliance officers and voluntary compliance personnel. A voluntary compliance and training manual was initially submitted by the State on March 31, 1977 and a completely revised version was submitted by a letter dated March 21, 1984. The State submitted a compliance manual for safety and health compliance officers on August 2, 1977. By letters dated November 20, 1978 and August 2, 1979, Virginia informed OSHA that it would adopt and implement Federal OSHA's Field Operations Manual and Industrial Hygiene Field Operations Manual. The State has adopted subsequent Federal changes to these manuals by letters dated August 26, 1981, February 9, 1984, and June 18, 1984. On July 30, 1984, the State submitted a completely revised Field Operations Manual reflecting changes to the Federal manual through June 1, 1984. In addition, by a letter dated June 5, 1984, the State indicated its intent to utilize and adopt the March 30, 1984 Federal Industrial Hygiene Technical Manual. These supplements were approved by the Assistant Secretary on August 15, 1984.

(o) In accordance with 29 CFR 1952.373(n), Virginia met its developmental commitment of developing and implementing an occupational safety

and health program applicable to employees of the State and local governments. On March 31, 1977, the State submitted rules and regulations applying Virginia occupational safety and health law and standards to State, local and municipal governments. These regulations were subsequently revised and incorporated into the State's Administrative Regulations Manual as submitted on September 13, 1983. These supplements were approved by the Assistant Secretary on August 15, 1984.

(p) In accordance with part 1953 of this chapter, Virginia submitted legislative amendments to Title 40.1 of the Labor Laws of Virginia as enacted by the Virginia General Assembly of February 6, 1979. These legislative amendments, which dealt primarily with the Commissioner's delegation authority, procedures concerning Virginia's system of judicial review of contested cases, and penalty provisions, were approved by the Assistant Secretary on August 15, 1984.

(q) In accordance with § 1902.34 of this chapter, the Virginia occupational safety and health plan was certified effective August 15, 1984 as having completed all developmental steps specified in the plan as approved on September 23, 1976 on or before September 23, 1979. This certification attests to structural completion, but does not render judgment on adequacy of performance.

[45 FR 77003, Nov. 21, 1980, as amended at 48 FR 48823, Oct. 21, 1983; 49 FR 33122 and 33126, Aug. 21, 1984. Redesignated at 51 FR 2489, Jan. 17, 1986; 67 FR 60129, Sept. 25, 2002]

§ 1952.373 Compliance staffing benchmarks.

Under the terms of the 1978 Court Order in *AFL-CIO* v. *Marshall* compliance staffing levels (benchmarks) necessary for a ''fully effective'' enforcement program were required to be established for each State operating an approved State plan. In September 1984 Virginia, in conjunction with OSHA, completed a reassessment of the levels initially established in 1980 and proposed revised compliance staffing benchmarks of 38 safety and 21 health compliance officers. After opportunity for public comment and service on the AFL-CIO, the Assistant Secretary approved these revised staffing requirements on January 17, 1986.

[51 FR 2489, Jan. 17, 1986]

§ 1952.374 Final approval determination.

(a) In accordance with section 18(e) of the Act and procedures in 29 CFR part 1902, and after determination that the State met the ''fully effective'' compliance staffing benchmarks as revised in 1984 in response to a Court Order in *AFL-CIO* v. *Marshall* (CA 74–406), and was satisfactorily providing reports to OSHA through participation in the Federal-State Integrated Management Information System, the Assistant Secretary evaluated actual operations under the Virginia State plan for a period of at least one year following certification of completion of developmental steps (49 FR 33123). Based on the 18(e) Evaluation Report for the period of January 1, 1987 through March 31, 1988, and after opportunity for public comment, the Assistant Secretary determined that in operation the State of Virginia's occupational safety and health program is at least as effective as the Federal program in providing safe and healthful employment and places of employment and meets the criteria for final State plan approval in section 18(e) of the Act and implementing regulations at 29 CFR part 1902. Accordingly, the Virginia plan was granted final approval and concurrent Federal enforcement authority was relinquished under section 18(e) of the Act effective November 30, 1988.

(b) Except as otherwise noted, the plan which has received final approval covers all activities of employers and all places of employment in Virginia. The plan does not cover private sector maritime employment; worksites located within Federal military facilities as well as on other Federal enclaves where civil jurisdiction has been ceded by the State to the Federal government; employment at the U.S. Department of Energy's Southeastern Power Administration Kerr-Philpott System; Federal government employers and employees; and the U.S. Postal Service (USPS), including USPS employees, and contract employees and contractor-operated facilities engaged in USPS mail operations.

(c) Virginia is required to maintain a State program which is at least as effective as operations under the Federal program; to submit plan supplements in accordance with 29 CFR part 1953; to allocate sufficient safety and health enforcement staff to meet the benchmarks for State staffing established by the U.S. Department of Labor, or any revisions to those benchmarks; and, to furnish such reports in such form as the Assistant Secretary may from time to time require.

[53 FR 48258, Nov. 30, 1988, as amended at 65 FR 36630, June 9, 2000; 71 FR 36991, June 29, 2006]

§ 1952.375 Level of Federal Enforcement.

(a) As a result of the Assistant Secretary's determination granting final approval to the Virginia plan under section 18(e) of the Act, effective November 30, 1988, occupational safety and health standards which have been promulgated under section 6 of the Act do not apply with respect to issues covered under the Virginia plan. This determination also relinquishes concurrent Federal OSHA authority to issue citations for violations of such standards under section 5(a)(2) and 9 of the Act; to conduct inspections and investigations under section 8 (except those necessary to conduct evaluation of the plan under section 18(f) and other inspections, investigations, or proceedings necessary to carry out Federal responsibilities not specifically preempted by section 18(e)); to conduct enforcement proceedings in contested cases under section 10; to institute proceedings to correct imminent dangers under section 13; and to propose civil penalties or initiate criminal proceedings for violations of the Federal Act under section 17. The Assistant Secretary retains jurisdiction under the above provisions in any proceeding commenced under section 9 or 10 before the effective date of the 18(e) determination.

(b)(1) In accordance with section 18(e), final approval relinquishes Federal OSHA authority only with regard to occupational safety and health issues covered by the Virginia plan. OSHA retains full authority over issues which are not subject to State enforcement under the plan. Thus, Federal OSHA retains its authority relative to safety and health in private sector maritime activities and will continue to enforce all provisions of the Act, rules or orders, and all Federal standards, current or future, specifically directed to maritime employment (29 CFR Part 1915, shipyard employment; Part 1917, marine terminals; Part 1918, longshoring; Part 1919, gear certification) as well as provisions of general industry and construction standards (29 CFR Parts 1910 and 1926) appropriate to hazards found in these employments, and employment at worksites located within Federal military facilities as well as on other Federal enclaves where civil jurisdiction has been ceded by the State to the Federal government. Federal jurisdiction is also retained with respect to employment at the U.S. Department of Energy's Southeastern Power Administration Kerr-Philpott System; Federal government employers and employees; and the U.S. Postal Service (USPS), including USPS employees, and contract employees and contractor-operated facilities engaged in USPS mail operations.

(2) In addition, any hazard, industry, geographical area, operation or facility over which the State is unable to effectively exercise jurisdiction for reasons which OSHA determines are not related to the required performance or structure of the plan shall be deemed to be an issue not covered by plan which has received final approval, and shall be subject to Federal enforcement. Where enforcement jurisdiction is shared between Federal and State authorities for a particular area, project, or facility, in the interest of administrative practicability Federal jurisdiction may be assumed over the entire project or facility. In any of the aforementioned circumstances, Federal enforcement authority may be exercised after consultation with the State designated agency.

(c) Federal authority under provisions of the Act not listed in section 18(e) is unaffected by final approval of the plan. Thus, for example, the Assistant Secretary retains his authority under section 11(c) of the Act with regard to complaints alleging discrimination against employees because of the

exercise of any right afforded to the employee by the Act, although such complaints may be referred to the State for investigation. The Assistant Secretary also retains his authority under section 6 of the Act to promulgate, modify or revoke occupational safety and health standards which address the working conditions of all employees, including those in States which have received an affirmative 18(e) determination, although such standards may not be Federally applied. In the event that the State's 18(e) status is subsequently withdrawn and Federal authority reinstated, all Federal standards, including any standards promulgated or modified during the 18(e) period, would be Federally enforceable in that State.

(d) As required by section 18(f) of the Act, OSHA will continue to monitor the operations of the Virginia State program to assure that the provisions of the State plan are substantially complied with and that the program remains at least as effective as the Federal program. Fairlure by the State to comply with its obligations may result in the revocation of Federal enforcement, and/or proceedings for withdrawal of plan approval.

[53 FR 48258, Nov. 30, 1988, as amended at 65 FR 36630, June 9, 2000; 71 FR 36991, June 29, 2006]

§ 1952.376 Where the plan may be inspected.

A copy of the principal documents comprising the plan may be inspected and copied during normal business hours at the following locations:

Office of State Programs, Occupational Safety and Health Administration, U.S. Department of Labor, 200 Constitution Avenue, NW, Room N3700, Washington, DC 20210;

Office of the Regional Administrator, Occupational Safety and Health Administration, U.S. Department of Labor, The Curtis Center, 170 South Independence Mall West—Suite 740 West, Philadelphia, Pennsylvania

Office of the Commissioner, Virginia Department of Labor and Industry, Powers-Taylor Building, 13 South 13th Street, Richmond, Virginia 23219.

[65 FR 36630, June 9, 2000]

§ 1952.377 Changes to approved plans.

In accordance with part 1953 of this chapter, the following Virginia plan changes were approved by the Assistant Secretary:

(a) The State submitted legislative amendments related to the issuance and judicial review of administrative search warrants which became effective on July 1, 1987. The Assistant Secretary approved these amendments on 14 September, 1987.

(b) *Legislation.* (1) On March 29, 1994, the Assistant Secretary approved Virginia's revised statutory penalty levels which are the same as the revised Federal penalty levels contained in section 17 of the Act as amended on November 5, 1990.

[52 FR 35070, Sept. 17, 1987, as amended at 59 FR 14556, Mar. 29, 1994]

Subpart FF—Puerto Rico

§ 1952.380 Description of the plan.

(a) The plan designates the Puerto Rico Department of Labor and Human Resources as the agency responsible for the administration and enforcement of the plan throughout the Commonwealth. This includes the responsibility for administration of a public employee program for which the same enforcement provisions and procedures used for the private sector will apply, with the exception of penalties. Penalties in the Commonwealth's Act for the private sector are essentially identical to those in the Federal Act, and Puerto Rico intends to adopt all Federal standards. The Commonwealth will exclude from coverage all industries included within the classifications of Marine Cargo Handling (SIC 4463) and Shipbuilding and Repairing (SIC 3713), but will adopt and enforce standards for boilers and elevators and other issues where no Federal OSHA standards exist. The plan provides that program personnel will be employed under a merit system and provides for a Management Information System. It also provides procedures for the development and promulgation of standards and procedures for the prompt restraint or elimination of imminent danger situations.

(b) The Puerto Rico Occupational Safety and Health Act was enacted on July 7, 1975, and approved by the Governor on August 5, 1975. It is similar in most respect to the Federal Act. The Puerto Rico Act provides employers the right of administrative review of citations, abatement requirements, and proposed penalties, and employee review of abatement dates, by a hearing examiner appointed by the Puerto Rico Secretary of Labor. The decision by the Secretary may be appealed by the employer or employees to the civil courts. The plan contains a statement of support by the Governor and an opinion by the Secretary of Justice that the Act is consistent with the State's Law and Constitution. Federal procedural regulations will be incorporated into the Commonwealth's regulations and the Federal Compliance Manual will be adopted to fit Puerto Rico's Law. In addition, the Puerto Rico Act requires that a Spanish language version of OSHA standards be made available within three years of plan approval.

(c) The Puerto Rico Act provides for, among other things, inspections in response to employee complaints; an opportunity for employer and employee representatives to accompany inspectors in order to aid inspections; notification of employees or their representatives when no compliance action is taken as a result of a complaint; notification of employees of their protections and obligations; protection for employees against discharge or discrimination in terms and conditions of employment; adequate safeguards to protect trade secrets; sanctions against employers for violations of standards and orders; and review of citations by a hearing examiner, with appeal to the Secretary of Labor and the Commonwealth's courts.

(d) The plan also proposes a program of voluntary compliance by employers and employees, including a provision for on-site consultation.

(e) The Puerto Rico Plan includes the following documents as of the date of approval:

(1) The plan description documents, in two volumes.

(2) A copy of the enabling legislation as enacted on July 7, 1975, and signed by the Governor on August 5, 1975.

(3) An assurance of separability of the enforcement personnel from the hearing examiner.

(4) A letter of assurance of the authenticity of the English version of the Puerto Rico OSHA Act from John Cinque Sacarello, Assistant Secretary for Occupational Safety and Health, Puerto Rico Department of Labor, dated December 4, 1975.

[42 FR 43629, Aug. 30, 1977]

§ 1952.381 Where the plan may be inspected.

A copy of the principal documents comprising the plan may be inspected and copied during normal business hours at the following locations:

Office of State Programs, Occupational Safety and Health Administration, U.S. Department of Labor, 200 Constitution Avenue, NW, Room N3700, Washington, DC 20210;

Regional Administrator, Occupational Safety and Health Administration, U.S. Department of Labor, 201 Varick Street, Room 670, New York, New York 10014.

Office of the Secretary, Puerto Rico Department of Labor and Human Resources, Prudencio Rivera Martinez Building, 505 Munoz Rivera Avenue, Hato Rey, Puerto Rico 00918.

[65 FR 36630, June 9, 2000]

§ 1952.382 Level of Federal enforcement.

Pursuant to § 1902.20(b)(1)(iii) and § 1954.3 of this chapter under which an agreement has been entered into with Puerto Rico, effective December 8, 1981, and based on a determination that Puerto Rico is operational in the issues covered by the Puerto Rico occupational safety and health plan, discretionary Federal enforcement authority under section 18(e) of the Act (29 U.S.C. 667(e)) will not be initiated with regard to Federal occupational safety and health standards in issues covered under 29 CFR Parts 1910 and 1926 except as provided in this section. The U.S. Department of Labor will continue to exercise authority, among other things, with regard to: complaints filed with the U.S. Department of Labor alleging discrimination under section 11(c) of the Act (29 U.S.C. 660(c)); safety and health in private sector maritime activities and will continue to enforce

all provisions of the Act, rules of orders, and all Federal standards, current or future, specifically directed to maritime employment (29 CFR Part 1915, shipyard employment; Part 1917, marine terminals; Part 1918, longshoring; Part 1919, gear certification) as well as provisions of general industry and construction standards (29 CFR Parts 1910 and 1926) appropriate to hazards found in these employments; enforcement relating to any contractors or subcontractors on any Federal establishment where the State cannot obtain entry; enforcement of new Federal standards until the State adopts a comparable standard; situations where the State is refused entry and is unable to obtain a warrant or enforce the right of entry; enforcement of unique and complex standards as determined by the Assistant Secretary; situations when the State is temporarily unable to exercise its enforcement authority fully or effectively; completion of enforcement actions initiated prior to the effective date of the agreement; and investigations and inspections for the purpose of the evaluation of the Puerto Rico plan under sections 18(e) and (f) of the Act (29 U.S.C. 667(e) and (f)). Federal OSHA will also retain authority for coverage of Federal employers and employees, and the U.S. Postal Service (USPS), including USPS employees, and contract employees and contractor-operated facilities engaged in USPS mail operations. The OSHA Regional Administrator will make a prompt recommendation for the resumption of the exercise of Federal enforcement authority under section 18(e) of the Act (29 U.S.C. 667(e)) whenever, and to the degree, necessary to assure occupational safety and health protection to employees in Puerto Rico.

[65 FR 36630, June 9, 2000]

§ 1952.383 Completion of developmental steps and certification.

(a) Position descriptions of State plan personnel by March, 1978.

(b) Public information program (private sector), one year after plan approval.

(c) Analysis for inspection scheduling (private sector), March 1980.

(d) Submit administrative regulations, September, 1978.

(e) Affirmative action plan by July, 1980.

(f) File and promulgate standards, March, 1978.

(g) Adopt the Field Operations Manual, April, 1980.

(h) Adopt management information system, January, 1980.

(i) Internal training schedule, April, 1980.

(j) Employer, employee training schedule, August, 1978.

(k) Public information program (government sector), February, 1980.

(l) Analysis for inspection scheduling (government sector), June, 1980.

(m) Implementation of public employee program, October, 1978.

(n) On-site consultation regulations, March, 1979.

(o) Laboratory, August, 1980.

(p) Posters, February, 1978.

(q) Boiler and Elevator Program, June, 1980.

(r) Staffing on Board for consultation, laboratory, boiler and elevators, February, 1980.

(s) In accordance with § 1902.34 of this chapter, the Puerto Rico occupational safety and health plan was certified effective September 7, 1982, as having completed all developmental steps specified in the plan as approved on August 15, 1977 on or before August 14, 1980. This certification attests to structural completion, but does not render judgment on adequacy of performance.

[45 FR 54334, July 15, 1980, as amended at 47 FR 39166, Sept. 7, 1982]

§ 1952.384 Completed developmental steps.

(a) In accordance with the requirements of § 1952.10, Puerto Rico's safety and health posters for private and public employees were approved by the Assistant Secretary, on July 2, 1979.

(b) In accordance with 29 CFR 1952.383(a), Puerto Rico submitted position descriptions for State plan personnel on March 3, 1980, and submitted revised position descriptions on September 8, 1980.

(c) In accordance with 29 CFR 1952.383(b), Puerto Rico submitted its public information program for the private sector on August 10, 1978.

(d) In accordance with 29 CFR 1952.383(c), Puerto Rico submitted its

analysis for inspection scheduling in the private sector on June 3, 1980.

(e) In accordance with 29 CFR 1952.383(d), Puerto Rico submitted its administrative regulations on September 13, 1978, and submitted revisions to the regulations on October 27, 1978, March 12, 1979, and February 14, 1980.

(f) In accordance with 29 CFR 1952.383(e), Puerto Rico has developed an affirmative action plan that was found acceptable by the United States Office of Personnel Management on March 27, 1981.

(g) In accordance with 29 CFR 1952.383(f), Puerto Rico has promulgated standards identical to Federal standards and subsequent amendments to reflect changes in and additions to Federal standards. The Regional Administrator approved these supplements on July 14, 1978 (43 FR 37233), June 18, 1979 (44 FR 71470), June 12, 1979 (44 FR 33751), April 17, 1979 (44 FR 22830), and October 23, 1981 (46 FR 52060).

(h) In accordance with 29 CFR 1952.383(g), Puerto Rico submitted its Field Operations Manuals on July 31, 1980, and submitted a revised supplement adopting the Federal OSHA Field Operations Manuals on February 25, 1981.

(i) In accordance with 29 CFR 1952.383(h), Puerto Rico has participated in the Federal OSHA Management Information System since August of 1978.

(j) In accordance with 29 CFR 1952.383(i), Puerto Rico submitted its internal training schedule on May 5, 1980.

(k) In accordance with 29 CFR 1952.383(j), Puerto Rico submitted its employer/employee training schedule on March 11, 1980, and on February 13, 1981, submitted an updated training schedule.

(l) In accordance with 29 CFR 1952.383(k), Puerto Rico submitted its public information program for the government sector on March 13, 1980.

(m) In accordance with 29 CFR 1952.383(l), Puerto Rico submitted its analysis for inspection scheduling in the government sector on August 13, 1980.

(n) In accordance with 29 CFR 1952.383(m), Puerto Rico implemented its public employee program in October 1978.

(o) In accordance with 29 CFR 1952.383(n), Puerto Rico submitted its on-site consultation regulations on March 30, 1979.

(p) In accordance with 29 CFR 1952.383(o), Puerto Rico submitted a State plan supplement on its industrial hygiene laboratory on July 14, 1980.

(q) In accordance with 29 CFR 1952.383(q), Puerto Rico submitted its procedures for a boiler and elevator inspection program on November 28, 1979. Based on OSHA recommendations, Puerto Rico submitted a revision to this supplement deleting the boiler and elevator inspection program from the State plan on November 14, 1980.

(r) In accordance with 29 CFR 1952.383(r), Puerto Rico submitted documentation of staffing levels for the on-site consultation program and the industrial hygiene laboratory on March 3, 1980. Based on OSHA recommendations, Puerto Rico deleted staffing for the boiler and elevator inspection program from its State plan on November 14, 1980.

[44 FR 41429, July 17, 1979, as amended at 47 FR 25329, June 11, 1982]

§ 1952.385 Changes to approved plans.

(a) *The Voluntary Protection Programs.* On December 30, 1993, the Assistant Secretary approved Puerto Rico's plan supplement, which is generally identical to the Federal Voluntary Protection Program with the exception of changes to reflect different structure and exclusion of the Demonstration Program.

(b) *Legislation.* (1) On March 29, 1994, the Assistant Secretary approved Puerto Rico's revised statutory penalty levels which are the same as the revised Federal penalty levels contained in section 17 of the Act as amended on November 5, 1990.

(2) [Reserved]

[59 FR 2995, Jan. 14, 1994, as amended at 59 FR 14556, Mar. 29, 1994]

PART 1953—CHANGES TO STATE PLANS

Sec.
1953.1 Purpose and scope.
1953.2 Definitions.
1953.3 General policies and procedures.
1953.4 Submission of plan supplements.
1953.5 Special provisions for standards changes.
1953.6 Review and approval of plan supplements.

AUTHORITY: Sec. 18, 84 Stat. 1608 (29 U.S.C. 667); Secretary of Labor's Order No. 3–2000 (65 FR 50017, August 16, 2000).

SOURCE: 67 FR 60125, Sept. 25, 2002, unless otherwise noted.

§ 1953.1 Purpose and scope.

(a) This part implements the provisions of section 18 of the Occupational Safety and Health Act of 1970 (''OSH Act'' or the ''Act'') which provides for State plans for the development and enforcement of State occupational safety and health standards. These plans must meet the criteria in section 18(c) of the Act, and part 1902 of this chapter (for plans covering both private sector and State and local government employers) or part 1956 of this chapter (for plans covering only State and local government employers), either at the time of submission or—where the plan is developmental—within the three year period immediately following commencement of the plan's operation. Approval of a State plan is based on a finding that the State has, or will have, a program, pursuant to appropriate State law, for the adoption and enforcement of State standards that is ''at least as effective'' as the Federal program.

(b) When submitting plans, the States provide assurances that they will continue to meet the requirements in section 18(c) of the Act and part 1902 or part 1956 of this chapter for a program that is ''at least as effective'' as the Federal. Such assurances are a fundamental basis for approval of plans. (*See* § 1902.3 and § 1956.2 of this chapter.) From time to time after initial plan approval, States will need to make changes to their plans. This part establishes procedures for submission and review of State plan supplements documenting those changes that are necessary to fulfill the State's assurances, the requirements of the Act, and part 1902 or part 1956 of this chapter.

(c) Changes to a plan may be initiated in several ways. In the case of a developmental plan, changes are required to document establishment of those necessary structural program components that were not in place at the time of plan approval. These commitments are included in a developmental schedule approved as part of the initial plan. These ''developmental changes'' must be completed within the three year period immediately following the commencement of operations under the plan. Another circumstance requiring subsequent changes to a State plan would be the need to keep pace with changes to the Federal program, or ''Federal Program Changes.'' A third situation would be when changes are required as a result of the continuing evaluation of the State program. Such changes are called ''evaluation changes.'' Finally, changes to a State program's safety and health requirements or procedures initiated by the State without a Federal parallel could have an impact on the effectiveness of the State program. Such changes are called ''State-initiated changes.'' While requirements for submission of a plan supplement to OSHA differ depending on the type of change, all supplements are processed in accordance with the procedures in § 1953.6.

§ 1953.2 Definitions.

(a) *OSHA* means the Assistant Secretary of Labor for Occupational Safety and Health, or any representative authorized to perform any of the functions discussed in this part, as set out in implementing Instructions.

(b) *State* means an authorized representative of the agency designated to administer a State plan under § 1902.3(b) of this chapter.

(c) *Plan change* means any modification made by a State to its approved occupational safety and health State plan which has an impact on the plan's effectiveness.

(d) *Plan supplement* means all documents necessary to accomplish, implement, describe and evaluate the effectiveness of a change to a State plan

which differs from the parallel Federal legislation, regulation, policy or procedure. (This would include a copy of the complete legislation, regulation, policy or procedure adopted; an identification of each of the differences; and an explanation of how each provision is at least as effective as the comparable Federal provision.)

(e) *Identical plan change* means one in which the State adopts the same program provisions and documentation as the Federal program with the only differences being those modifications necessary to reflect a State's unique structure (e.g., organizational responsibility within a State and corresponding titles or internal State numbering system). *Different plan change* means one in which the State adopts program provisions and documentation that are not identical as defined in this paragraph.

(g) *Developmental change* is a change made to a State plan which documents the completion of a program component which was not fully developed at the time of initial plan approval.

(h) *Federal program change* is a change made to a State plan when OSHA determines that an alteration in the Federal program could render a State program less effective than OSHA's if it is not similarly modified.

(i) *Evaluation change* is a change made to a State plan when evaluations of a State program show that some substantive aspect of a State plan has an adverse impact on the implementation of the State's program and needs revision.

(j) *State-initiated change* is a change made to a State plan which is undertaken at a State's option and is not necessitated by Federal requirements.

§ 1953.3 General policies and procedures.

(a) *Effectiveness of State plan changes under State law*. Federal OSHA approval of a State plan under section 18(b) of the OSH Act in effect removes the barrier of Federal preemption, and permits the State to adopt and enforce State standards and other requirements regarding occupational safety or health issues regulated by OSHA. A State with an approved plan may modify or supplement the requirements contained in its plan, and may implement such requirements under State law, without prior approval of the plan change by Federal OSHA. Changes to approved State plans are subject to subsequent OSHA review. If OSHA finds reason to reject a State plan change, and this determination is upheld after an adjudicatory proceeding, the plan change would then be excluded from the State's Federally-approved plan.

(b) *Required State plan notifications and supplements*. Whenever a State makes a change to its legislation, regulations, standards, or major changes to policies or procedures, which affect the operation of the State plan, the State shall provide written notification to OSHA. When the change differs from a corresponding Federal program component, the State shall submit a formal, written plan supplement. When the State adopts a provision which is identical to a corresponding Federal provision, written notification, but no formal plan supplement, is required. However, the State is expected to maintain the necessary underlying State document (e.g., legislation or standard) and to make it available for review upon request. All plan change supplements or required documentation must be submitted within 60 days of adoption of the change. Submission of all notifications and supplements may be in electronic format.

(c) *Plan supplement availability*. Copies of all principal documents comprising the State plan, whether approved or pending approval, shall be available for inspection and copying at the Federal and State locations specified in the subpart of Part 1952 of this chapter relating to each State plan. The underlying documentation for identical plan changes shall be maintained by the State and shall similarly be available for inspection and copying at the State locations. Annually, States shall submit updated copies of the principal documents comprising the plan, or appropriate page changes, to the extent that these documents have been revised. To the extent possible, plan documents will be maintained and submitted by the State in electronic format and also made available in such manner.

(d) *Advisory opinions.* Upon State request, OSHA may issue an advisory opinion on the approvability of a proposed change which differs from the Federal program prior to promulgation or adoption by the State and submission as a formal supplement.

(e) *Alternative procedures.* Upon reasonable notice to interested persons, the Assistant Secretary may prescribe additional or alternative procedures in order to expedite the review process or for any other good cause which may be consistent with the applicable laws.

§ 1953.4 Submission of plan supplements.

(a) *Developmental changes.* (1) Sections 1902.2(b) and 1956.2(b) of this chapter require that each State with a developmental plan must set forth in its plan, as developmental steps, those changes which must be made to its initially-approved plan for its program to be at least as effective as the Federal program and a timetable for making these changes. The State must notify OSHA of a developmental change when it completes a developmental step or fails to meet any developmental step.

(2) If the completion of a developmental step is the adoption of a program component which is identical to the Federal program component, the State need only submit documentation, such as the cover page of an implementing directive or a notice of promulgation, that it has adopted the program component, within 60 days of adoption of the change, but must make the underlying documentation available for Federal and public review upon request.

(3) If the completion of a developmental step involves the adoption of policies or procedures which differ from the Federal program, the State must submit one copy of the required plan supplement within 60 days of adoption of the change.

(4) When a developmental step is missed, the State must submit a supplement which documents the impact on the program of the failure to complete the developmental step, an explanation of why the step was not completed on time and a revised timetable with a new completion date (generally not to exceed 90 days) and any other actions necessary to ensure completion. Where the State has an operational status agreement with OSHA under § 1954.3 of this Chapter, the State must provide an assurance that the missed step will not affect the effectiveness of State enforcement in any issues for which the State program has been deemed to be operational.

(5) If the State fails to submit the required documentation or supplement, as provided in § 1953.4(a)(2), (3) or (4), when the developmental step is scheduled for completion, OSHA shall notify the State that documentation or a supplement is required and set a timetable for submission of any required documentation or supplement, generally not to exceed 60 days.

(b) *Federal Program changes.* (1) When a significant change in the Federal program would have an adverse impact on the ''at least as effective'' status of the State program if a parallel State program modification were not made, State adoption of a change in response to the Federal program change shall be required. A Federal program change that would not result in any diminution of the effectiveness of a State plan compared to Federal OSHA generally would not require adoption by the State.

(2) Examples of significant changes to the Federal program that would normally require a State response would include a change in the Act, promulgation or revision of OSHA standards or regulations, or changes in policy or procedure of national importance. A Federal program change that only establishes procedures necessary to implement a new or established policy, standard or regulation does not require a State response, although the State would be expected to establish policies and procedures which are ''at least as effective,'' which must be available for review on request.

(3) When there is a change in the Federal program which requires State action, OSHA shall advise the States. This notification shall also contain a date by which States must adopt a corresponding change or submit a statement why a program change is not necessary. This date will generally be six months from the date of notification, except where the Assistant Secretary

determines that the nature or scope of the change requires a different time frame, for example, a change requiring legislative action where a State has a biennial legislature or a policy of major national implications requiring a shorter implementing time frame. State notification of intent may be required prior to adoption.

(4) If the State change is different from the Federal program change, the State shall submit one copy of the required supplement within 60 days of State adoption. The supplement shall contain a copy of the relevant legislation, regulation, policy or procedure and documentation on how the change maintains the ''at least as effective as'' status of the plan.

(5) If the State adopts a change identical to the Federal program change, the State is not required to submit a supplement. However, the State shall provide documentation that it has adopted the change, such as the cover page of an implementing directive or a notice of promulgation, within 60 days of State adoption.

(6) The State may demonstrate why a program change is not necessary because the State program is already the same as or at least as effective as the Federal program change. Such submissions will require review and approval as set forth in § 1953.6.

(7) Where there is a change in the Federal program which does not require State action but is of sufficient national interest to warrant indication of State intent, the State may be required to provide such notification within a specified time frame.

(c) *Evaluation changes.* (1) Special and periodic evaluations of a State program by OSHA in cooperation with the State may show that some portion of a State plan has an adverse impact on the effectiveness of the State program and accordingly requires modification to the State's underlying legislation, regulations, policy or procedures as an evaluation change. For example, OSHA could find that additional legislative or regulatory authority may be necessary to effectively pursue the State's right of entry into workplaces, or to assure various employer rights.

(2) OSHA shall advise the State of any evaluation findings that require a change to the State plan and the reasons supporting this decision. This notification shall also contain a date by which the State must accomplish this change and submit either the change supplement or a timetable for its accomplishment and interim steps to assure continued program effectiveness, documentation of adoption of a program component identical to the Federal program component, or, as explained in paragraph (c)(5) of this section, a statement demonstrating why a program change is not necessary.

(3) If the State adopts a program component which differs from a corresponding Federal program component, the State shall submit one copy of a required supplement within 60 days of adoption of the change. The supplement shall contain a copy of the relevant legislation, regulation, policy or procedure and documentation on how the change maintains the ''at least as effective as'' status of the plan.

(4) If the State adopts a program component identical to a Federal program component, submission of a supplement is not required. However, the State shall provide documentation that it has adopted the change, such as the cover page of an implementing directive or a notice of promulgation, within 60 days of adoption of the change and shall retain all other documentation within the State available for review upon request.

(5) The State may demonstrate why a program change is not necessary because the State program is meeting the requirements for an ''at least as effective'' program. Such submission will require review and approval as set forth in § 1953.6.

(d) *State-initiated changes.* (1) A State-initiated change is any change to the State plan which is undertaken at a State's option and is not necessitated by Federal requirements. State-initiated changes may include legislative, regulatory, administrative, policy or procedural changes which impact on the effectiveness of the State program.

(2) A State-initiated change supplement is required whenever the State takes an action not otherwise covered by this part that would impact on the effectiveness of the State program. The State shall notify OSHA as soon as it

becomes aware of any change which could affect the State's ability to meet the approval criteria in parts 1902 and 1956 of this chapter, e.g., changes to the State's legislation, and submit a supplement within 60 days. Other State initiated supplements must be submitted within 60 days after the change occurred. The State supplement shall contain a copy of the relevant legislation, regulation, policy or procedure and documentation on how the change maintains the ''at least as effective as'' status of the plan. If the State fails to notify OSHA of the change or fails to submit the required supplement within the specified time period, OSHA shall notify the State that a supplement is required and set a time period for submission of the supplement, generally not to exceed 30 days.

§ 1953.5 Special provisions for standards changes.

(a) *Permanent standards.* (1) Where a Federal program change is a new permanent standard, or a more stringent amendment to an existing permanent standard, the State shall promulgate a State standard adopting such new Federal standard, or more stringent amendment to an existing Federal standard, or an at least as effective equivalent thereof, within six months of the date of promulgation of the new Federal standard or more stringent amendment. The State may demonstrate that a standard change is not necessary because the State standard is already the same as or at least as effective as the Federal standard change. In order to avoid delays in worker protection, the effective date of the State standard and any of its delayed provisions must be the date of State promulgation or the Federal effective date whichever is later. The Assistant Secretary may permit a longer time period if the State makes a timely demonstration that good cause exists for extending the time limitation. State permanent standards adopted in response to a new or revised Federal standard shall be submitted as a State plan supplement within 60 days of State promulgation in accordance with § 1953.4(b), Federal Program changes.

(2) Because a State may include standards and standards provisions in addition to Federal standards within an issue covered by an approved plan, it would generally be unnecessary for a State to revoke a standard when the comparable Federal standard is revoked or made less stringent. If the State does not adopt the Federal action, it need only provide notification of its intent to retain the existing State standard to OSHA within 6 months of the Federal promulgation date. If the State adopts a change to its standard parallel to the Federal action, it shall submit the appropriate documentation as provided in §§ 1953.4(b)(3) or (4)—Federal program changes. However, in the case of standards applicable to products used or distributed in interstate commerce where section 18(c)(2) of the Act imposes certain restrictions on State plan authority, the modification, revision, or revocation of the Federal standard may necessitate the modification, revision, or revocation of the comparable State standard unless the State standard is required by compelling local conditions and does not unduly burden interstate commerce.

(3) Where a State on its own initiative adopts a permanent State standard for which there is no Federal parallel, the State shall submit it within 60 days of State promulgation in accordance with § 1953.4(d)—State-initiated changes,

(b) *Emergency temporary standards.* (1) Immediately upon publication of an emergency temporary standard in the FEDERAL REGISTER, OSHA shall advise the States of the standard and that a Federal program change supplement shall be required. This notification must also provide that the State has 30 days after the date of promulgation of the Federal standard to adopt a State emergency temporary standard if the State plan covers that issue. The State may demonstrate that promulgation of an emergency temporary standard is not necessary because the State standard is already the same as or at least as effective as the Federal standard change. The State standard must remain in effect for the duration of the Federal emergency temporary standard which may not exceed six (6) months.

(2) Within 15 days after receipt of the notice of a Federal emergency temporary standard, the State shall advise OSHA of the action it will take. State standards shall be submitted in accordance with the applicable procedures in §1953.4(b)—Federal Program Changes, except that the required documentation or plan supplement must be submitted within 5 days of State promulgation.

(3) If for any reason, a State on its own initiative adopts a State emergency temporary standard, it shall be submitted as a plan supplement in accordance with §1953.4(c), but within 10 days of promulgation.

§1953.6 Review and approval of plan supplements.

(a) OSHA shall review a supplement to determine whether it is at least as effective as the Federal program and meets the criteria in the Act and implementing regulations and the assurances in the State plan. If the review reveals any defect in the supplement, or if more information is needed, OSHA shall offer assistance to the State and shall provide the State an opportunity to clarify or correct the change.

(b) If upon review, OSHA determines that the differences from a corresponding Federal component are purely editorial and do not change the substance of the policy or requirements on employers, it shall deem the change identical. This includes ''plain language'' rewrites of new Federal standards or previously approved State standards which do not change the meaning or requirements of the standard. OSHA will inform the State of this determination. No further review or FEDERAL REGISTER publication is required.

(c) Federal OSHA may seek public comment during its review of plan supplements. Generally, OSHA will seek public comment if a State program component differs significantly from the comparable Federal program component and OSHA needs additional information on its compliance with the criteria in section 18(c) of the Act, including whether it is at least as effective as the Federal program and in the case of a standard applicable to products used or distributed in interstate commerce, whether it is required by compelling local conditions or unduly burdens interstate commerce under section 18(c)(2) of the Act.

(d) If the plan change meets the approval criteria, OSHA shall approve it and shall thereafter publish a FEDERAL REGISTER notice announcing the approval. OSHA reserves the right to reconsider its decision should subsequent information be brought to its attention.

(e) If a State fails to submit a required supplement or if examination discloses cause for rejecting a submitted supplement, OSHA shall provide the State a reasonable time, generally not to exceed 30 days, to submit a revised supplement or to show cause why a proceeding should not be commenced either for rejection of the supplement or for failure to adopt the change in accordance with the procedures in §1902.17 or Part 1955 of this chapter.

PART 1954—PROCEDURES FOR THE EVALUATION AND MONITORING OF APPROVED STATE PLANS

Subpart A—General

Sec.
1954.1 Purpose and scope.
1954.2 Monitoring system.
1954.3 Exercise of Federal discretionary authority.

Subpart B—State Monitoring Reports and Visits to State Agencies

1954.10 Reports from the States.
1954.11 Visits to State agencies.

Subpart C—Complaints About State Program Administration (CASPA)

1954.20 Complaints about State program administration.
1954.21 Processing and investigating a complaint.
1954.22 Notice provided by State.

AUTHORITY: Sec. 18, 84 Stat. 1608 (29 U.S.C. 667); Secretary of Labor's Order No. 3–2000 (65 FR 50017, August 16, 2000).

SOURCE: 39 FR 1838, Jan. 15, 1974, unless otherwise noted.

Subpart A—General

§ 1954.1 Purpose and scope.

(a) Section 18(f) of the Williams-Steiger Occupational Safety and Health Act of 1970 (hereinafter referred to as the Act) provides that ''the Secretary shall, on the basis of reports submitted by the State agency and his own inspections make a continuing evaluation of the manner in which each State having a plan approved * * * is carrying out such plan.''

(b) This part 1954 applies to the provisions of section 18(f) of the Act relating to the evaluation of approved plans for the development and enforcement of State occupational safety and health standards. The provisions of this part 1954 set forth the policies and procedures by which the Assistant Secretary for Occupational Safety and Health (hereinafter referred to as the Assistant Secretary) under a delegation of authority from the Secretary of Labor (Secretary's Order 12–71, 36 FR 8754, May 12, 1971) will continually monitor and evaluate the operation and administration of approved State plans.

(c) Following approval of a State plan under section 18(c) of the Act, workplaces in the State are subject to a period of concurrent Federal and State authority. The period of concurrent enforcement authority must last for at least three years. Before ending Federal enforcement authority, the Assistant Secretary is required to make a determination as to whether the State plan, in actual operation, is meeting the criteria in section 18(c) of the Act including the requirements in part 1902 of this chapter and the assurances in the approval plan itself. After an affirmative determination has been made, the provisions of sections 5(a)(2), 8 (except for the purpose of carrying out section 18(f) of the Act), 9, 10, 13, and 17 of the Act shall not apply with respect to any occupational safety or health issues covered under the plan. The Assistant Secretary may, however, retain jurisdiction under the above provisions in any proceeding commenced under section 9 or 10 of the Act before the date of the determination under section 18(e) of the Act.

(d) During this period of concurrent Federal and State authority, the operation and administration of the plan will be continually evaluated under section 18(f) of the Act. This evaluation will continue even after an affirmative determination has been made under section 18(e) of the Act.

§ 1954.2 Monitoring system.

(a) To carry out the responsibilities for continuing evaluation of State plans under section 18(f) of the Act, the Assistant Secretary has established a State Program Performance Monitoring System. Evaluation under this monitoring system encompasses both the period before and after a determination has been made under section 18(e) of the Act. The monitoring system is a three phased system designed to assure not only that developmental steps are completed and that the operational plan is, in fact, at least as effective as the Federal program with respect to standards and enforcement, but also to provide a method for continuing review of the implementation of the plan and any modifications thereto to assure compliance with the provisions of the plan during the time the State participates in the cooperative Federal-State program.

(b) Phase I of the system begins with the initial approval of a State plan and continues until the determination required by section 18(e) of the Act is made. During Phase I, the Assistant Secretary will secure monitoring data to make the following key decisions:

(1) What should be the level of Federal enforcement;

(2) Should plan approval be continued; and

(3) What level of technical assistance is needed by the State to enable it to have an effective program.

(c) Phase II of the system relates to the determination required by section 18(e) of the Act. The Assistant Secretary must decide, after no less than three years following approval of the plan, whether or not to relinquish Federal authority to the State for issues covered by the occupational safety and health program in the State plan. Phase II will be a comprehensive evaluation of the total State program, drawing upon all information collected during Phase I.

(d) Phase III of the system begins after an affirmative determination has been made under section 18(e) of the Act. The continuing evaluation responsibility will be exercised under Phase III, and will provide data concerning the total operations of a State program to enable the Assistant Secretary to determine whether or not the plan approval should be continued or withdrawn.

(e) The State program performance monitoring system provides for, but is not limited to, the following major data inputs:

(1) Quarterly and annual reports of State program activity;

(2) Visits to State agencies;

(3) On-the-job evaluation of State compliance officers; and

(4) Investigation of complaints about State program administration.

§ 1954.3 Exercise of Federal discretionary authority.

(a)(1) When a State plan is approved under section 18(c) of the Act, Federal authority for enforcement of standards continues in accordance with section 18(e) of the Act. That section prescribes a period of concurrent Federal-State enforcement authority which must last for at least three years, after which time the Assistant Secretary shall make a determination whether, based on actual operations, the State plan meets all the criteria set forth in section 18(c) of the Act and the implementing regulations in 29 CFR part 1902 and subpart A of 29 CFR part 1952. During this period of concurrent authority, the Assistant Secretary may, but shall not be required to, exercise his authority under sections 5(a)(2), 8, 9, 10, 13 and 17 of the Act with respect to standards promulgated under section 6 of the Act where the State has comparable standards. Accordingly, section 18(e) authorizes, but does not require, the Assistant Secretary to exercise his discretionary enforcement authority over all the issues covered by a State plan for the entire 18(e) period.

(2) Existing regulations at 29 CFR part 1902 set forth factors to be considered in determining how Federal enforcement authority should be exercised. These factors include:

(i) Whether the plan is developmental or complete;

(ii) Results of evaluations conducted by the Assistant Secretary;

(iii) The State's schedule for meeting Federal standards; and

(iv) Any other relevant matters.

(29 CFR 1902.1(c)(2) and 1902.20(b)(1)(iii).

(3) Other relevant matters requiring consideration in the decision as to the level of Federal enforcement include:

(i) Coordinated utilization of Federal and State resources to provide effective worker protection throughout the Nation;

(ii) Necessity for clarifying the rights and responsibilities of employers and employees with respect to Federal and State authority;

(iii) Increasing responsibility for administration and enforcement by States under an approved plan for evaluation of their effectiveness; and

(iv) The need to react promptly to any failure of the States in providing effective enforcement of standards.

(b) *Guidelines for determining the appropriate level of Federal enforcement.* In light of the requirements of 29 CFR part 1902 as well as the factors mentioned in paragraph (a)(3) of this section, the following guidelines for the extent of the exercise of discretionary Federal authority have been determined to be reasonable and appropriate. When a State plan meets all of these guidelines it will be considered operational, and the State will conduct all enforcement activity including inspections in response to employee complaints, in all issues where the State is operational. Federal enforcement activity will be reduced accordingly and the emphasis will be placed on monitoring State activity in accordance with the provisions of this part.

(1) *Enabling legislation.* A State with an approved plan must have enacted enabling legislation substantially in conformance with the requirements of section 18(c) and 29 CFR part 1902 in order to be considered operational. This legislation must have been reviewed and approved under 29 CFR part 1902. States without such legislation, or where State legislation as enacted requires substantial amendments to meet the requirements of 29 CFR part 1902, will not be considered operational.

(2) Approved State standards. The State must have standards promulgated under State law which are identical to Federal standards; or have been found to be at least as effective as the comparable Federal standards; or have been reviewed by OSHA and found to provide overall protection equal to comparable Federal standards. Review of the effectiveness of State standards and their enforcement will be a continuing function of the evaluation process. Where State standards in an issue have not been promulgated by the State or have been promulgated and found not to provide overall protection equal to comparable Federal standards, the State will not be considered operational as to those issues.

(3) *Personnel*. The State must have a sufficient number of qualified personnel who are enforcing the standards in accordance with the State's enabling legislation. Where a State lacks the qualified personnel to enforce in a particular issue; e.g., Occupational Health, the State will not be considered operational as to that issue even though it has enabling legislation and standards.

(4) *Review of enforcement actions*. Provisions for review of State citations and penalties, including the appointment of the reviewing authority and the promulgation of implementing regulations, must be in effect.

(c)(1) *Evaluation reports*. One of the factors to consider in determining the level of Federal enforcement is the result of evaluations conducted under the monitoring system described in this part. While completion of an initial comprehensive evaluation of State operations is not generally a prerequisite for a determination that a State is operational under paragraph (b) of this section, such evaluations will be used in determining the Federal enforcement responsibility in certain circumstances.

(2) Where evaluations have been completed prior to the time a determination as to the operational status of a State plan is made, the results of those evaluations will be included in the determination.

(3) Where the results of one or more evaluations conducted during the operation of a State plan and prior to an 18(e) determination reveal that actual operations as to one or more aspects of the plan fail in a substantial manner to be at least as effective as the Federal program, and the State does not adequately resolve the deficiencies in accordance with subpart C of part 1953, the appropriate level of Federal enforcement activity shall be reinstated. An example of such deficiency would be a finding that State standards and their enforcement in an issue are not at least as effective as comparable Federal standards and their enforcement. Federal enforcement activity may also be reinstated where the Assistant Secretary determines that such action is necessary to assure occupational safety and health protection to employees.

(d)(1) *Recognition of State procedures*. In order to resolve potential conflicting responsibilities of employers and employees, Federal authority will be exercised in a manner designed to recognize the implementation of State procedures in accordance with approved plans in areas such as variances, informing employees of their rights and obligations, and recordkeeping and reporting requirements.

(i) Subject to pertinent findings of effectiveness under this part, Federal enforcement proceedings will not be initiated where an employer is in compliance with a State standard which has been found to be at least as effective as the comparable Federal standard, or with any temporary or permanent variance granted to such employer with regard to the employment or place of employment from such State standard, or any order or interim order in connection therewith, or any modification or extension thereof: *Provided* such variance action was taken under the terms and procedures required under §1902.4(b)(2)(iv) of this chapter, and the employer has certified that he has not filed for such variance on the same set of facts with the Assistant Secretary.

(ii) Subject to pertinent findings of effectiveness under this part, and approval under Part 1953 of this chapter, Federal enforcement proceedings will not be initiated where an employer has posted the approved State poster in accordance with the applicable provisions of an approved State plan and §1952.10.

(iii) Subject to pertinent findings of effectiveness under this part, and approval under part 1953 of this chapter, Federal enforcement proceedings will not be initiated where an employer is in compliance with the recordkeeping and reporting requirements of an approved State plan as provided in § 1952.4.

(2) [Reserved]

(e) *Discrimination complaints.* State plan provisions on employee discrimination do not divest the Secretary of Labor of any authority under section 11(c) of the Act. The Federal authority to investigate discrimination complaints exists even after an affirmative 18(e) determination. (See South Carolina decision 37 FR 25932, December 6, 1972). Employee complaints alleging discrimination under section 11(c) of the Act will be subject to Federal jurisdiction.

(f)(1) *Procedural agreements.* A determination as to the operational status of a State plan shall be accompanied by an agreement with the State setting forth the Federal-State responsibilities as follows:

(i) Scope of the State's operational status including the issues excluded from the plan, the issues where State enforcement will not be operational at the time of the agreement and the dates for commencement of operations;

(ii) Procedures for referral, investigation and enforcement of employee requests for inspections;

(iii) Procedures for reporting fatalities and catastrophes by the agency which has received the report to the responsible enforcing authority both where the State has and has not adopted the requirement that employers report as provided in 29 CFR 1904.8;

(iv) Specifications as to when and by what means the operational guidelines of this section were met; and

(v) Provision for resumption of Federal enforcement activity for failure to substantially comply with this agreement, or as a result of evaluation or other relevant factors.

(2) Upon approval of these agreements, the Assistant Secretary shall cause to be published in the FEDERAL REGISTER, notice of the operational status of each approved State plan.

(3) Where subsequent changes in the level of Federal enforcement are made, similar FEDERAL REGISTER notices shall be published.

[39 FR 22126, June 20, 1974, as amended at 39 FR 29182, Aug. 14, 1974; 39 FR 39036, Nov. 5, 1974; 40 FR 25450, June 16, 1975; 67 FR 60129, Sept. 25, 2002]

Subpart B—State Monitoring Reports and Visits to State Agencies

§ 1954.10 Reports from the States.

(a) In addition to any other reports required by the Assistant Secretary under sections 18(c)(8) and 18(f) of the Act and § 1902.3(1) of this chapter, the State shall submit quarterly and annual reports as part of the evaluation and monitoring of State programs.[1]

(b) Each State with an approved State plan shall submit to the appropriate Regional Office an annual occupational safety and health report in the form and detail provided for in the report and the instructions contained therein.

(c) Each State with an approved State plan shall submit to the appropriate Regional Office a quarterly occupational safety and health compliance and standards activity report in the form and detail provided for in the report and the instructions contained therein.

§ 1954.11 Visits to State agencies.

As a part of the continuing monitoring and evaluation process, the Assistant Secretary or his representative shall conduct visits to the designated agency or agencies of State with approved plans at least every 6 months. An opportunity may also be provided for discussion and comments on the effectiveness of the State plan from other interested persons. These visits will be scheduled as needed. Periodic audits will be conducted to assess the progress of the overall State program in meeting the goal of becoming at least as effective as the Federal program. These audits will include case

[1] Such quarterly and annual reports forms may be obtained from the Office of the Assistant Regional Director in whose Region the State is located.

file review and follow-up inspections of workplaces.

Subpart C—Complaints About State Program Administration (CASPA)

§ 1954.20 Complaints about State program administration.

(a) Any interested person or representative of such person or groups of persons may submit a complaint concerning the operation or administration of any aspect of a State plan. The complaint may be submitted orally or in writing to the Assistant Regional Director for Occupational Safety and Health (hereinafter referred to as the Assistant Regional Director) or his representative in the Region where the State is located.

(b) Any such complaint should describe the grounds for the complaint and specify the aspect or aspects of the administration or operation of the plan which is believed to be inadequate. A pattern of delays in processing cases, of inadequate workplace inspections, or the granting of variances without regard to the specifications in the State plans, are examples.

(c)(1) If upon receipt of the complaint, the Assistant Regional Director determines that there are reasonable grounds to believe that an investigation should be made, he shall cause such investigation, including any workplace inspection, to be made as soon as practicable.

(2) In determining whether an investigation shall be conducted and in determining the timing of such investigation, the Assistant Regional Director shall consider such factors as:

(i) The extent to which the complaint affects any substantial number of persons;

(ii) The number of complaints received on the same or similar issues and whether the complaints relate to safety and health conditions at a particular establishment;

(iii) Whether the complainant has exhausted applicable State remedies; and

(iv) The extent to which the subject matter of the complaint is pertinent to the effectuation of Federal policy.

§ 1954.21 Processing and investigating a complaint.

(a) Upon receipt of a complaint about State program administration, the Assistant Regional Director will acknowledge its receipt and may forward a copy of the complaint to the designee under the State plan and to such other person as may be necessary to complete the investigation. The complainant's name and the names of other complainants mentioned therein will be deleted from the complaint and the names shall not appear in any record published, released or made available.

(b) In conducting the investigation, the Assistant Regional Director may obtain such supporting information as is appropriate to the complaint. Sources for this additional information may include ''spot-check'' follow-up inspections of workplaces, review of the relevant State files, and discussion with members of the public, employers, employees and the State.

(c) On the basis of the information obtained through the investigation, the Assistant Regional Director shall advise the complainant of the investigation findings and in general terms, any corrective action that may result. A copy of such notification shall be sent to the State and it shall be considered part of the evaluation of the State plan.

(d) If the Assistant Regional Director determines that there are no reasonable grounds for an investigation to be made with respect to a complaint under this Subpart, he shall notify the complaining party in writing of such determination. Upon request of the complainant, or the State, the Assistant Regional Director, at his discretion, may hold an informal conference. After considering all written and oral views presented the Assistant Regional Director shall affirm, modify, or reverse his original determination and furnish the complainant with written notification of his decision and the reasons therefore. Where appropriate the State may also receive such notification.

§ 1954.22 Notice provided by State.

(a)(1) In order to assure that employees, employers, and members of the public are informed of the procedures

for complaints about State program administration, each State with an approved State plan shall adopt not later than July 1, 1974, a procedure not inconsistent with these regulations or the Act, for notifying employees, employers and the public of their right to complain to the Occupational Safety and Health Administration about State program administration.

(2) Such notification may be by posting of notices in the workplace as part of the requirement in § 1902.4(c)(2)(iv) of this chapter and other appropriate sources of information calculated to reach the public.

(b) [Reserved]

PART 1955—PROCEDURES FOR WITHDRAWAL OF APPROVAL OF STATE PLANS

Subpart A—General

Sec.
1955.1 Purpose and scope.
1955.2 Definitions.
1955.3 General policy.
1955.4 Effect of withdrawal of approval.
1955.5 Petitions for withdrawal of approval.

Subpart B—Notice of Formal Proceeding

1955.10 Publication of notice of formal proceeding.
1955.11 Contents of notice of formal proceeding.
1955.12 Administrative law judge; powers and duties.
1955.13 Disqualification.
1955.14 Ex parte communications.
1955.15 Manner of service and filing.
1955.16 Time.
1955.17 Determination of parties.
1955.18 Provision for written comments.

Subpart C—Consent Findings and Summary Decisions

1955.20 Consent findings and orders.
1955.21 Motion for a summary decision.
1955.22 Summary decision.

Subpart D—Preliminary Conference and Discovery

1955.30 Submission of documentary evidence.
1955.31 Preliminary conference.
1955.32 Discovery.
1955.33 Sanctions for failure to comply with orders.
1955.34 Fees of witnesses.

Subpart E—Hearing and Decision

1955.40 Hearings.
1955.41 Decision of the administrative law judge.
1955.42 Exceptions.
1955.43 Transmission of the record.
1955.44 Final decision.
1955.45 Effect of appeal of administrative law judge's decision.
1955.46 Finality for purposes of judicial review.
1955.47 Judicial review.

AUTHORITY: Sec. 18, 84 Stat. 1608 (29 U.S.C. 667); Secretary of Labor's Order No. 3–2000 (65 FR 50017, August 16, 2000).

SOURCE: 40 FR 23467, May 30, 1975, unless otherwise noted.

Subpart A—General

§ 1955.1 Purpose and scope.

(a) This part contains rules of practice and procedure for formal administrative proceedings on the withdrawal of initial or final approval of State plans in accordance with section 18(f) of the Occupational Safety and Health Act of 1970 (29 U.S.C. 667).

(b) These rules shall be construed to secure a prompt and just conclusion of the proceedings subject thereto.

§ 1955.2 Definitions.

(a) As used in this part unless the context clearly requires otherwise:

(1) *Act* means the Occupational Safety and Health Act of 1970;

(2) *Assistant Secretary* means Assistant Secretary of Labor for Occupational Safety and Health;

(3) *Commencement of a case* under section 18(f) of the Act means, for the purpose of determining State jurisdiction following a final decision withdrawing approval of a plan, the issuance of a citation.

(4) *Developmental step* includes, but is not limited to, those items listed in the published developmental schedule, or any revisions thereto, for each plan contained in 29 CFR part 1952. A developmental step also includes those items in the plan as approved under section 18(c) of the Act, as well as those items in the approval decision which are subject to evaluations (*see e.g.*, approval of Michigan plan), which were deemed necessary to make the State program at least as effective as

the Federal program within the 3 year developmental period. (*See* part 1953 of this chapter.

(5) *Final approval* means approval of the State plan, or any modification thereof under section 18(e) of the Act and subpart D of 29 CFR part 1902.

(6) *Initial approval* means approval of a State plan, or any modification thereof under section 18(c) of the Act and subpart C of 29 CFR part 1902;

(7) *Party* includes the State agency or agencies designated to administer and enforce the State plan that is the subject of withdrawal proceedings, the Department of Labor, Occupational Safety and Health Administration (hereinafter called OSHA), represented by the Office of the Solicitor and any person participating in the proceedings pursuant to § 1955.17;

(8) *Person* means an individual, partnership, association, corporation, business trust, legal representative, an organized group of individuals, or an agency, authority, or instrumentality of the United States or of a State;

(9) *Secretary* means Secretary of Labor;

(10) *Separable portion of a plan* for purposes of withdrawal of approval generally means an issue as defined in 29 CFR 1902.2(c), *i.e.*, ''an industrial, occupational or hazard grouping which is at least as comprehensive as a corresponding grouping contained in (i) one or more sections in subpart B or R of part 1910 of this chapter, or (ii) one or more of the remaining subparts of part 1910'': *Provided,* That wherever the Assistant Secretary has determined that other industrial, occupational or hazard groupings are administratively practicable, such groupings shall be considered separable portions of a plan.

(b) [Reserved]

[40 FR 23467, May 30, 1975, as amended at 67 FR 60129, Sept. 25, 2002]

§ 1955.3 General policy.

(a) The following circumstances shall be cause for initiation of proceedings under this part for withdrawal of approval of a State plan, or any portion thereof.

(1) Whenever the Assistant Secretary determines that under § 1902.2(b) of this chapter a State has not substantially completed the developmental steps of its plan at the end of three years from the date of commencement of operations, a withdrawal proceeding shall be instituted. Examples of a lack of substantial completion of developmental steps include but are not limited to the following:

(i) A failure to develop the necessary regulations and administrative guidelines for an ''at least as effective'' enforcement program;

(ii) Failure to promulgate all or a majority of the occupational safety and health standards in an issue covered by the plan; or

(iii) Failure to enact the required enabling legislation.

(2) Whenever the Assistant Secretary determines that there is no longer a reasonable expectation that a State plan will meet the criteria of § 1902.3 of this chapter involving the completion of developmental steps within the three year period immediately following commencement of operations, a withdrawal proceeding shall be instituted. Examples of a lack of reasonable expectation include but are not limited to the following:

(i) A failure to enact enabling legislation in the first two years following commencement of operations where the remaining developmental steps are dependent on the passage of enabling legislation and cannot be completed within one year; or

(ii) Repeal or substantial amendment of the enabling legislation by the State legislature so that the State program fails to meet the criteria in § 1902.3 of this chapter; or

(iii) Inability to complete the developmental steps within the indicated three year period.

(3) Whenever the Assistant Secretary determines that in the operation or administration of a State plan, or as a result of any modifications to a plan, there is a failure to comply substantially with any provision of the plan, including assurances contained in the plan, a withdrawal proceeding shall be instituted in a State which has received final approval under section 18(e) of the Act, and may be instituted in a State which has received initial approval under section 18(c) of the Act.

Examples of a lack of substantial compliance include but are not limited to the following:

(i) Where a State over a period of time consistently fails to provide effective enforcement of standards;

(ii) Where the rights of employees are circumscribed in such a manner as to diminish the effectiveness of the program;

(iii) Where a State, without good cause, fails to continue to maintain its program in accordance with the appropriate changes in the Federal program;

(iv) Where a State fails to comply with the required assurances on a sufficient number of qualified personnel and/or adequate resources for administration and enforcement of the program; or

(v) Where, on the basis of actual operations, the Assistant Secretary determines that the criteria in section 18(c) of the Act are not being met, that the period of concurrent authority under section 18(e) of the Act should not be extended, and that final approval under section 18(e) of the Act should not be given.

(b) A State may, at any time both before or after a determination under section 18(e) of the Act, voluntarily withdraw its plan, or any portion thereof, by notifying the Assistant Secretary in writing setting forth the reasons for such withdrawal. Such notification shall be accompanied by a letter terminating the application for related grants authorized under section 23(g) of the Act in accordance with 29 CFR 1951.25(d). Upon receipt of the State notice the Assistant Secretary shall cause to be published in the FEDERAL REGISTER a notice of withdrawal of approval of the State plan or portion thereof (see Montana notice 39 FR 2361, June 27, 1974).

(c) Approval of a portion of a plan may be withdrawn under any of the paragraphs in this section when it is determined that that portion is reasonably separable from the remainder of the plan in a manner consistent with the provisions in § 1902.2(c) of this chapter defining the scope of a State plan. As an example, such a partial withdrawal of approval would be considered appropriate where a State fails to adopt, without good cause shown, Federal standards within a separable issue, such as occupational health.

[40 FR 23467, May 30, 1975, as amended at 67 FR 60129, Sept. 25, 2002]

§ 1955.4 Effect of withdrawal of approval.

(a) After receipt of notice of withdrawal of approval of a State plan, such plan, or any part thereof, shall cease to be in effect and the provisions of the Federal Act shall apply within that State. But the State, in accordance with section 18(f) of the Act, may retain jurisdiction in any case commenced before receipt of the notice of withdrawal of approval of the plan, in order to enforce standards under the plan, whenever the issues involved in the case or cases pending do not relate to the reasons for withdrawal of the plan.

(b) Such notice of withdrawal of approval shall operate constructively as notice of termination of all related grants authorized under section 23(g) of the Act in accordance with 29 CFR 1951.25(c).

§ 1955.5 Petitions for withdrawal of approval.

(a) At any time following the initial approval of a State plan under section 18(c) of the Act, any interested person may petition the Assistant Secretary in writing to initiate proceedings for withdrawal of approval of the plan under section 18(f) of the Act and this part. The petition shall contain a statement of the grounds for initiating a withdrawal proceeding, including facts to support the petition.

(b)(1) The Assistant Secretary may request the petitioner for additional facts and may take such other actions as are considered appropriate such as:

(i) Publishing the petition for public comment;

(ii) Holding informal discussion on the issues raised by the petition with the State and other persons affected; or

(iii) Holding an informal hearing in accordance with § 1902.13 of this chapter.

(2) Any such petition shall be considered and acted upon within a reasonable time. Prompt notice shall be given of the denial in whole or in part of any

petition and the notice shall be accompanied by a brief statement of the grounds for the denial. A denial of a petition does not preclude future action on those issues or any other issues raised regarding a State plan.

Subpart B—Notice of Formal Proceeding

§ 1955.10 Publication of notice of formal proceeding.

(a) The Assistant Secretary, prior to any notice of a formal proceeding under this subpart, shall by letter, provide the State with an opportunity to show cause within 45 days why a proceeding should not be instituted for withdrawal of approval of a plan or any portion thereof. When a State fails to show cause why a formal proceeding for withdrawal of approval should not be instituted, the State shall be deemed to have waived its right to a formal proceeding under paragraph (b) of this section and the Assistant Secretary shall cause to be published in the FEDERAL REGISTER a notice of withdrawal of approval of the State plan.

(b)(1) Whenever the Assistant Secretary, on the basis of a petition under § 1955.5 or on his own initiative, determines that approval of a State plan or any portion thereof should be withdrawn, and the State has not waived its right under § 1955.3(b) or paragraph (a) of this section to a formal proceeding, he shall publish a notice of proposed withdrawal in the FEDERAL REGISTER as set out in § 1955.11 and cause such notice, in the form of a complaint, to be served on the State in accordance with § 1955.15.

(2) Not later than 5 days following the publication of the notice in the FEDERAL REGISTER, the State agency shall publish, or cause to be published, within the State reasonable notice containing a summary of the information in the Federal notice, as well as the location or locations where a copy of the full notice is available for inspection and public copying.

(3) Two copies of such notice shall be served on the Assistant Secretary in accordance with § 1955.15.

(c) Not less than 30 days following publication of the notice in the FEDERAL REGISTER, the State shall submit a statement of those items in the notice which are being contested and a brief statement of the facts relied upon, including whether the use of witnesses is intended. This statement shall be served on the Assistant Secretary in accordance with § 1955.15. When a State fails to respond to the notice of proposed withdrawal under paragraph (b)(1) of this section, the State shall be deemed to have waived its right to a formal proceeding and the Assistant Secretary shall cause to be published in the FEDERAL REGISTER a notice of withdrawal of approval.

§ 1955.11 Contents of notice of formal proceeding.

(a) A notice of a formal proceeding published under § 1955.10 shall include:

(1) A statement on the nature of the proceeding and addresses for filing all papers;

(2) The legal authority under which the proceeding is to be held;

(3) A description of the issues and the grounds for the Assistant Secretary's proposed withdrawal of approval;

(4) A specified period, generally not less than 30 days after publication of the notice in the FEDERAL REGISTER, for the State to submit a response to the statement of issues in the notice;

(5) A provision for designation of an administrative law judge under 5 U.S.C. 3105 to preside over the proceeding.

(b) A copy of the notice of the proceeding stating the basis for the Assistant Secretary's determination that approval of the plan, or any portion thereof, should be withdrawn shall be referred to the administrative law judge.

§ 1955.12 Administrative law judge; powers and duties.

(a) The administrative law judge appointed under 5 U.S.C. 3105 and designated by the Chief Administrative Law Judge to preside over a proceeding shall have all powers necessary and appropriate to conduct a fair, full, and impartial proceeding, including the following:

(1) To administer oaths and affirmations;

(2) To rule upon offers of proof and receive relevant evidence;

(3) To provide for discovery, including the issuance of subpoenas authorized by section 8(b) of the Act and 5 U.S.C. 555(d) and 556(c)(2), and to determine the scope and time limits of the discovery;

(4) To regulate the course of the proceeding and the conduct of the parties and their counsel;

(5) To consider and rule upon procedural requests, e.g. motions for extension of time;

(6) To hold preliminary conferences for the settlement or simplification of issues;

(7) To take official notice of material facts not appearing in the evidence in the record in accordance with § 1955.40(c);

(8) To render an initial decision;

(9) To examine and cross-examine witnesses;

(10) To take any other appropriate action authorized by the Act, the implementing regulations, or the Administrative Procedure Act, 5 U.S.C. 554–557 (hereinafter called the APA).

(b) On any procedural question not otherwise regulated by this part, the Act, or the APA, the administrative law judge shall be guided to the extent practicable by the pertinent provisions of the Federal Rules of Civil Procedure.

§ 1955.13 Disqualification.

(a) If an administrative law judge deems himself disqualified to preside over a particular proceeding, he shall withdraw by notice on the record directed to the Chief Administrative Law Judge. Any party who deems an administrative law judge, for any reason, to be disqualified to preside, or to continue to preside, over a particular proceeding may file a motion to disqualify and remove the administrative law judge, provided the motion is filed prior to the time the administrative law judge files his decision. Such motion must be supported by affidavits setting forth the alleged ground for disqualification. The Chief Administrative Law Judge shall rule upon the motion.

(b) Contumacious conduct at any proceeding before the administrative law judge shall be ground for summary exclusion from the proceeding. If a witness or party refuses to answer a question after being so directed, or refuses to obey an order to provide or permit discovery, the administrative law judge may make such orders with regard to the refusal as are just and proper, including the striking of all testimony previously given by such witness on related matters.

§ 1955.14 Ex parte communications.

(a) Except to the extent required for the disposition of *ex parte* matters, the administrative law judge shall not consult any interested person or party or their representative on any fact in issue or on the merits of any matter before him except upon notice and opportunity for all parties to participate.

(b)(1) Written or oral communications from interested persons outside the Department of Labor involving any substantive or procedural issues in a proceeding directed to the administrative law judge, the Secretary of Labor, the Assistant Secretary, the Associate Assistant Secretary for Regional Programs, the Solicitor of Labor, or the Associate Solicitor for Occupational Safety and Health, or their staffs shall be deemed *ex parte* communications and are not to be considered part of any record or the basis for any official decision, unless the communication is made by motion to the administrative law judge and served upon all the parties.

(2) To facilitate implementation of this requirement, the above-mentioned offices shall keep a log of such communications which shall be made available to the public and which may, by motion, be entered into the record.

(c) No employee or agent of the Department of Labor engaged in the investigation or presentation of the withdrawal proceeding governed by this part shall participate or advise in the initial or final decision, except as a witness or counsel in the proceeding.

§ 1955.15 Manner of service and filing.

(a) Service of any document upon any party may be made by personal delivery of, or by mailing a copy of the document by certified mail, to the last known address of the party or his representative. The person serving the

document shall certify to the manner and date of service.

(b) In addition to serving a copy of any documents upon the parties, the original and two copies of each document shall be filed with the administrative law judge. With respect to exhibits and transcripts, only originals or certified copies need be filed.

§ 1955.16 Time.

Computation of any period of time under these rules shall begin with the first business day following that on which the act, event or development initiating such period of time shall have occurred. When the last day of the period so computed is a Saturday, Sunday, or national holiday, or other day on which the Department of Labor is closed, the period shall run until the end of the next following business day. When such period of time is 7 days or less, each of the Saturdays, Sundays, and such holidays shall be excluded from the computation.

§ 1955.17 Determination of parties.

(a) The designated State agency or agencies and the Department of Labor, OSHA, shall be the initial parties to the proceedings. Other interested persons may, at the discretion of the administrative law judge, be granted the right to participate as parties if he determines that the final decision could substantially affect them or the class they represent or that they may contribute materially to the disposition of the proceedings.

(b)(1) Any person wishing to participate in any proceeding as a party under paragraph (a) of this section shall submit a petition to the administrative law judge within 30 days after the notice of such proceeding has been published in the FEDERAL REGISTER. The petition shall also be served upon the other parties. Such petition shall concisely state:

(i) Petitioner's interest in the proceeding;

(ii) How his participation as a party will contribute materially to the disposition of the proceeding;

(iii) Who will appear for petitioner;

(iv) The issue or issues as set out in the notice published under § 1955.10 of this part on which petitioner wishes to participate; and

(v) Whether petitioner intends to present witnesses.

(2) The administrative law judge shall, within 5 days of receipt of the petition, ascertain what objections, if any, there are to the petition. He shall then determine whether the petitioner is qualified in his judgment to be a party in the proceedings and shall permit or deny participation accordingly. The administrative law judge shall give each petitioner written notice of the decision on his petition promptly. If the petition is denied, the notice shall briefly state the grounds for denial. Persons whose petition for party participation is denied may appeal the decision to the Secretary within 5 days of receipt of the notice of denial. The Secretary will make the final decision to grant or deny the petition no later than 20 days following receipt of the appeal.

(3) Where the petitions to participate as parties are made by individuals or groups with common interests, the administrative law judge may require all such petitioners to designate a single representative, or he may recognize one or more of such petitioners to represent all such petitioners.

§ 1955.18 Provision for written comments.

Any person who is not a party may submit a written statement of position with 4 copies to either the Assistant Secretary or the State at any time during the proceeding which statement shall be made available to all parties and may be introduced into evidence by a party. Mere statements of approval or opposition to the plan without any documentary support shall not be considered as falling within this provision.

Subpart C—Consent Findings and Summary Decisions

§ 1955.20 Consent findings and orders.

(a)(1) At any time during the proceeding a reasonable opportunity may be afforded to permit negotiation by the parties of an agreement containing consent findings and a rule or order disposing of the whole or any part of

the proceeding. The allowance of such opportunity and the duration thereof shall be in the discretion of the administrative law judge, after consideration of the requirements of section 18 of the Act, the nature of the proceeding, the requirements of the public interest, the representations of the parties, and the probability of an agreement which will result in a just disposition of the issues.

(2) Any agreement containing consent findings and a rule or order disposing of a proceeding shall also provide:

(i) That the rule or order shall have the same force and effect as if made after a full hearing;

(ii) A waiver of any further procedural steps before the administrative law judge and the Secretary; and

(iii) A waiver of any right to challenge or contest the validity of the findings and of the rule or order made in accordance with the agreement.

(b)(1) On or before the expiration of the time granted for negotiations, the parties or their counsel may:

(i) Submit the proposed agreement to the administrative law judge for his consideration; or

(ii) Inform the administrative law judge that agreement cannot be reached.

(2) In the event an agreement containing consent findings and a rule or order is submitted within the time allowed therefor, the administrative law judge may accept such agreement by issuing his decision based upon the agreed findings. Such decision shall be published in the FEDERAL REGISTER.

§ 1955.21 Motion for a summary decision.

(a)(1) Any party may move, with or without supporting affidavits, for a summary decision on all or any part of the proceeding. Any other party may, within 10 days after service of the motion, serve opposing affidavits or file a cross motion for summary decision. The administrative law judge may, in his discretion, set the matter for argument and call for submission of briefs. The filing of any documents under this section shall be with the administrative law judge and copies of any such document shall be served on all the parties.

(2) The administrative law judge may grant such motion if the pleadings, affidavits, material obtained by discovery or otherwise obtained, or matters officially noticed, show that there is no genuine issue as to any material fact and that a party is entitled to summary decision. Affidavits shall set forth such facts as would be admissible in evidence in the hearing and shall show affirmatively that the affiant is competent to testify to the matters stated therein. When a motion for summary decision is made and supported as provided in paragraph (a)(1) of this section, the party opposing the motion may not rest upon the mere allegations or denials of his pleading; his response must set forth specific facts showing that there is a genuine issue of fact for the hearing.

(3) Should it appear from the affidavits of a party opposing the motion that he cannot, for reasons stated, present by affidavit facts essential to justify his opposition, the administrative law judge may refuse the application for summary decision or may order a continuance to permit affidavits to be obtained, or depositions to be taken, or discovery to be had, or may make such other order as is just.

(b)(1) The denial of all or any part of a motion or cross motion for summary decision by the administrative law judge shall not be subject to interlocutory appeal to the Secretary unless the administrative law judge certifies in writing:

(i) That the ruling involves an important question of law or policy as to which there is substantial ground for difference of opinion; and

(ii) That an immediate appeal from the ruling may materially advance the ultimate termination of the proceeding.

(2) The allowance of such an interlocutory appeal shall not stay the proceeding before the administrative law judge unless the Secretary so orders.

§ 1955.22 Summary decision.

(a)(1) Where no genuine issue of material fact is found to have been raised, the administrative law judge shall issue an initial decision to become

final 30 days after service thereof upon each party unless, within those 30 days, any party has filed written exceptions to the decision with the Secretary. Requests for extension of time to file exceptions may be granted if the requests are received by the Secretary no later than 25 days after service of the decision.

(2) If any timely exceptions are filed, the Secretary may set a time for filing any response to the exceptions with supporting reasons. All exceptions and responses thereto shall be served on all the parties.

(b)(1) The Secretary, after consideration of the decision, the exceptions, and any supporting briefs filed therewith and any responses to the exceptions with supporting reasons, shall issue a final decision.

(2) An initial decision and a final decision under this section shall include a statement of:

(i) Findings of fact and conclusions of law and the reasons and bases therefor on all issues presented;

(ii) Reference to any material fact based on official notice; and

(iii) The terms and conditions of the rule or order made.

The final decision shall be published in the FEDERAL REGISTER and served on all the parties.

(c) Where a genuine material question of fact is raised, the administrative law judge shall, and in any other case may, set the case for an evidentiary hearing. A notice of such hearing shall be published in the FEDERAL REGISTER at least 30 days prior to the hearing date.

Subpart D—Preliminary Conference and Discovery

§ 1955.30 Submission of documentary evidence.

(a) Where there has been no consent finding or summary decision under subpart C of this part and a formal hearing is necessary, the administrative law judge shall set a date by which all documentary evidence, which is to be offered during the hearing, shall be submitted to the administrative law judge and served on the other parties. Such submission date shall be sufficiently in advance of the hearing as to permit study and preparation for cross-examination and rebuttal evidence. Documentary evidence not submitted in advance may be received into evidence upon a clear showing that the offering party had good cause for failure to produce the evidence sooner.

(b) The authenticity of all documents submitted in advance shall be deemed admitted unless written objections are filed prior to the hearing, except that a party will be permitted to challenge such authenticity at a later date upon clear showing of good cause for failure to have filed such written objections.

§ 1955.31 Preliminary conference.

(a) Upon his own motion, or the motion of a party, the administrative law judge may direct the parties to meet with him for a conference or conferences to consider:

(1) Simplification of the issues;

(2) The necessity or desirability of amendments to documents for purposes of clarification, simplification, or limitation;

(3) Stipulations of fact, and of the authenticity, of the contents of documents;

(4) Limitations on the number of parties and of witnesses;

(5) Scope of participation of petitioners under § 1955.17 of this part;

(6) Establishment of dates for discovery; and

(7) Such other matters as may tend to expedite the disposition of the proceedings, and to assure a just conclusion thereof.

(b) The administrative law judge shall enter an order which recites the action taken at the conference, the amendments allowed to any documents which have been filed, and the agreements made between the parties as to any of the matters considered. Such order shall limit the issues for hearing to those not disposed of by admissions or agreements, and control the subsequent course of the hearing, unless modified at the hearing to prevent manifest injustice.

§ 1955.32 Discovery.

(a)(1) At any time after the commencement of a proceeding under this part, but generally before the preliminary conference, if any, a party may

request of any other party admissions that relate to statements or opinions of fact, or of the application of law to fact, including the genuineness of any document described in the request. Copies of documents shall be served with the request unless they have been or are otherwise furnished or made available for inspection or copying. The matter shall be deemed admitted unless within 30 days after service of the request, or within such shorter or longer time as the administrative law judge may prescribe, the party to whom the request is directed serves upon the party requesting the admission a specific written response.

(2) If objection is made, the reasons therefor shall be stated. The answer shall specifically deny the matter or set forth in detail the reasons why the answering party cannot truthfully admit or deny the matter. A denial shall fairly meet the substance of the requested admission and when good faith requires that a party qualify his answer or deny only a part of the matter on which an admission is requested, he shall specify so much of it as is true and qualify or deny the remainder. An answering party may not give lack of information or knowledge as the reason for failure to admit or deny unless he states that he has made reasonable inquiry and that the information known or readily obtainable by him is insufficient to enable him to admit or deny.

(3) The party who has requested the admission may move to determine the sufficiency of the answers or objections. Unless the administrative law judge determines that an objection is justified, he may order either that the matter is admitted or that an amended answer be served. The administrative law judge may, in lieu of these orders, determine that final disposition of the requests be made at a preliminary conference, or at a designated time prior to the hearing. Any matter admitted under this section is conclusively established unless the administrative law judge on motion permits withdrawal or amendment of the admission. Copies of all requests and responses shall be served on all parties and filed with the administrative law judge.

(b)(1) The testimony of any witness may be taken by deposition. Depositions may be taken orally or upon written interrogatories before any person designated by the administrative law judge or having power to administer oaths.

(2) Any party desiring to take the deposition of a witness may make application in writing to the administrative law judge setting forth:

(i) The time when, the place where, and the name and post office address of the person before whom the deposition is to be taken;

(ii) The name and address of each witness; and

(iii) The subject matter concerning which each witness is expected to testify.

(3) Such notice as the administrative law judge may order shall be given by the party taking the deposition to every other party.

(c)(1) Each witness testifying upon deposition shall be sworn, and the parties not calling him shall have the right to cross-examine him. The questions propounded and the answers thereto, together with all objections made, shall be reduced to writing and shall be read to or by the witness unless such examination and reading are waived by the witness and the parties. Any changes in form or substance which the witness desires to make shall be entered upon the deposition by the officer with a statement of the reasons given by the witness for making them. The deposition shall then be signed by the witness and certified by the officer before whom the deposition was taken. Thereafter, the officer shall seal the deposition, with copies thereof, in an envelope and mail the same by registered or certified mail to the administrative law judge.

(2) Subject to such objections to the questions and answers as were noted at the time of taking the deposition, and to the provisions in §1955.40(b)(1), any part or all of a deposition may be offered into evidence by the party taking it as against any party who was present, represented at the taking of the deposition, or who had due notice thereof.

(d) Whenever appropriate to a just disposition of any issue in the proceeding the administrative law judge may allow discovery by any other appropriate procedure, such as by interrogatories upon a party or request for production of documents by a party.

(e) Upon motion by a party or by the person from whom discovery is sought, and for good cause shown, the administrative law judge may make any order which justice requires to limit or condition discovery in order to protect a party or person from annoyance, embarrassment, oppression, or undue burden or expense.

§ 1955.33 Sanctions for failure to comply with orders.

(a) If a party or an official or agent of a party fails, without good cause, to comply with an order including, but not limited to, an order for the taking of a deposition, written interrogatories, the production of documents, or an order to comply with a subpoena, the administrative law judge or the Secretary or both, for the purpose of permitting resolution of relevant issues and disposition of the proceeding without unnecessary delay despite such failure, may take such action as is just, including but not limited to the following:

(1) Infer that the admission, testimony, documents, or other evidence would have been adverse to the party;

(2) Rule that for the purposes of the proceeding, the matter or matters concerning which the order or subpoena was issued be taken as established adversely to the party;

(3) Rule that the party may not introduce into evidence or otherwise rely, in support of any claim or defense, upon testimony by such party, officer or agent, or the documents or other evidence;

(4) Rule that the party may not be heard to object to introduction and use of secondary evidence to show what the withheld admission, testimony, documents, or other evidence would have shown;

(5) Rule that a pleading, or part of a pleading, on a motion or other submission by the party, concerning which the order or subpoena was issued, be stricken or that decision on the pleading be rendered against the party, or both.

(b) Any such action may be taken by written or oral order issued in the course of the proceeding or by inclusion in the initial decision of the administrative law judge or an order or opinion of the Secretary. The parties may seek, and the administrative law judge may grant, such of the foregoing means of relief or other appropriate relief as may be sufficient to compensate for the lack of withheld testimony, documents, or other evidence.

§ 1955.34 Fees of witnesses.

Witnesses, including witnesses for depositions, shall be paid the same fees and mileage that are paid witnesses in the courts of the United States. Fees shall be paid by the party at whose instance the witness appears, and the person taking a deposition shall be paid by the party at whose instance the deposition is taken.

Subpart E—Hearing and Decision

§ 1955.40 Hearings.

(a)(1) Except as may be ordered otherwise by the administrative law judge, the Department of Labor shall proceed first at the hearing.

(2) The Department of Labor shall have the burden of proof to sustain the contentions alleged in the notice of proposed withdrawal, published under § 1955.10(b)(1) but the proponent of any factual proposition shall be required to sustain the burden of proof with respect thereto.

(b)(1) A party shall be entitled to present his case or defense by oral or documentary evidence, to submit rebuttal evidence, and to conduct such cross-examination as may be required for a full and true disclosure of the facts. Any oral or documentary evidence may be received, but the administrative law judge shall exclude evidence which is irrelevant, immaterial, or unduly repetitious.

(2) The testimony of a witness shall be upon oath or affirmation administered by the administrative law judge.

(3) If a party objects to the admission or rejection of any evidence, or to the limitation of the scope of any examination or cross-examination, or to the

failure to limit such scope, he shall state briefly the grounds for such objection. Rulings on all objections shall appear in the record. Only objections made before the administrative law judge may be relied upon subsequently in the proceeding.

(4) Formal exception to an adverse ruling is not required.

(c) Official notice may be taken of any material fact not appearing in evidence in the record, which is among the traditional matters of judicial notice, or concerning which the Department of Labor by reason of its functions is presumed to be expert: Provided, that the parties shall be given adequate notice, at the hearing or by reference in the administrative law judge's and the Secretary's decision of the matters so noticed and shall be given adequate opportunity to show the contrary.

(d) When an objection to a question propounded to a witness is sustained, the examining party may make a specific offer of proof of what the party expects to prove by the answer of the witness orally or in writing. Written offers of proof, adequately marked for identification, shall be retained in the record so as to be available for consideration by any reviewing authority.

(e) Hearings shall be stenographically reported. Copies of the transcript may be obtained by the parties and the public upon payment of the actual cost of duplication to the Department of Labor in accordance with 29 CFR 70.62(c).

(f) Corrections of the official transcript may be made only when they involve errors affecting substance and then only in the manner herein provided. Corrections may be ordered by the administrative law judge or agreed to in a written stipulation by all parties or their representatives. Where the parties are in disagreement, the administrative law judge shall determine the corrections to be made and so order. Corrections may be interlineated in the official transcript so as not to obliterate the original text.

§ 1955.41 Decision of the administrative law judge.

(a) Within 30 days after receipt of notice that the transcript of the testimony has been filed with the administrative law judge, or such additional time as the administrative law judge may allow, each party may file with the administrative law judge proposed findings of fact, conclusions of law, and rules or orders, together with a supporting brief expressing the reasons for such proposals. Such proposals and brief shall be served on all other parties and shall refer to all portions of the record and to all authorities relied upon in support of each proposal.

(b)(1) Within a reasonable time after the time allowed for the filing of proposed findings of fact, conclusions of law, and rules or orders, the administrative law judge shall make and serve upon each party his initial decision which shall become final upon the 30th day after service thereof unless exceptions are filed thereto.

(2) The decision of the administrative law judge shall be based solely upon substantial evidence on the record as a whole and shall state all facts officially noticed and relied upon. The decision of the administrative law judge shall include:

(i) A statement of the findings of fact and conclusions of law, with reasons and bases therefor upon each material issue of fact, law, or discretion presented on the record;

(ii) Reference to any material fact based on official notice; and

(iii) The appropriate rule, order, relief, or denial thereof.

§ 1955.42 Exceptions.

(a) Within 30 days after service of the decision of the administrative law judge, any party may file with the Secretary written exceptions thereto with supporting reasons. Such exceptions shall refer to the specific findings of fact, conclusions of law, or terms of the rule or order excepted to; and shall suggest corrected findings of fact, conclusions of law, or terms of the rule or order referencing the specific pages of the transcript relevant to the suggestions. Requests for extension of time to file exceptions may be granted if the requests are received by the Secretary no later than 25 days after service of the decision.

(b) If any timely exceptions are filed, the Secretary may set a time for filing

any response to the exceptions with supporting reasons. All exceptions and responses thereto shall be served on all the parties.

§ 1955.43 Transmission of the record.

If exceptions are filed, the Secretary shall request the administrative law judge to transmit the record of the proceeding to the Secretary for review. The record shall include the State plan; a copy of the Assistant Secretary's notice of proposed withdrawal; the State's statement of items in contention; the notice of the hearing if any; any motions and requests filed in written form and rulings thereon; the transcript of the testimony taken at the hearing, together with any documents or papers filed in connection with the preliminary conference and the hearing itself; such proposed findings of fact, conclusions of law, rules or orders, and supporting reasons as may have been filed; the administrative law judge's decision; and such exceptions, responses, and briefs in support thereof as may have been filed in the proceedings.

§ 1955.44 Final decision.

(a) After review of any exceptions, together with the record references and authorities cited in support thereof, the Secretary shall issue a final decision ruling upon each exception and objection filed. The final decision may affirm, modify, or set aside in whole or in part the findings, conclusions, and the rule or order contained in the decision of the administrative law judge. The final decision shall also include reference to any material fact based on official notice.

(b) The Secretary's final decision shall be served upon all the parties and shall become final upon the 30th day after service thereof unless the Secretary grants a stay pending judicial review.

§ 1955.45 Effect of appeal of administrative law judge's decision.

An administrative law judge's decision shall be stayed pending a decision on appeal to the Secretary. If there are no exceptions filed to the decisions of the administrative law judge, the administrative law judge's decision shall be published in the FEDERAL REGISTER as a final decision and served upon the parties.

§ 1955.46 Finality for purposes of judicial review.

Only a final decision by the Secretary under § 1955.44 shall be deemed final agency action for purposes of judicial review. A decision of an administrative law judge which becomes final for lack of appeal is not deemed final agency action for purposes of 5 U.S.C. 704.

§ 1955.47 Judicial review.

The State may obtain judicial review of a decision by the Secretary in accordance with section 18(g) of the Act.

PART 1956—STATE PLANS FOR THE DEVELOPMENT AND ENFORCEMENT OF STATE STANDARDS APPLICABLE TO STATE AND LOCAL GOVERNMENT EMPLOYEES IN STATES WITHOUT APPROVED PRIVATE EMPLOYEE PLANS

Subpart A—General

Sec.
1956.1 Purpose and scope.
1956.2 General policies.

Subpart B—Criteria

1956.10 Specific criteria.
1956.11 Indices of effectiveness.

Subpart C—Approval, Change, Evaluation and Withdrawal of Approval Procedures

1956.20 Procedures for submission, approval and rejection.
1956.21 Procedures for submitting changes.
1956.22 Procedures for evaluation and monitoring.
1956.23 Procedures for certification of completion of development and determination on application of criteria.
1956.24 Procedures for withdrawal of approval.

Subpart D—General Provisions and Conditions [Reserved]

Subpart E—Connecticut

1956.40 Description of the plan.
1956.41 Where the plan may be inspected.
1956.43 Developmental schedule.
1956.44 Completion of developmental steps and certification.

Subpart F—New York

1956.50 Description of the plan as certified.
1956.51 Developmental schedule.
1956.52 Completed developmental steps and certification.
1956.53 [Reserved]
1956.54 Location of basic State plan documentation.
1956.55 [Reserved]

Subpart G—New Jersey

1956.60 Description of the plan as initially approved.
1956.61 Developmental schedule.
1956.62 Completion of developmental steps and certification. [Reserved]
1956.63 Determination of operational effectiveness. [Reserved]
1956.64 Location of plan for inspection and copying.

Subpart H—The Virgin Islands

1956.70 Description of plan as approved.
1956.71 Developmental schedule.
1956.72 Changes to approved plan. [Reserved]
1956.73 Determination of operational effectiveness. [Reserved]
1956.74 Location of basic State plan documentation.

Subpart I—Illinois

1956.80 Description of the plan as initially approved.
1956.81 Developmental schedule.
1956.82–1956.83 [Reserved]
1956.84 Location of plan for inspection and copying.

AUTHORITY: Section 18 of the Occupational Safety and Health Act of 1970, (29 U.S.C. 667), 29 CFR 1902, 1952, and 1955, and Secretary of Labor's Order No. 5–2007 (72 FR 31160).

SOURCE: 41 FR 12429, Mar. 4, 1977, unless otherwise noted.

Subpart A—General

§ 1956.1 Purpose and scope.

(a) This part sets forth procedures and requirements for approval, continued evaluation, and operation of State plans submitted under section 18 of the Occupational Safety and Health Act of 1970 (29 U.S.C. 667) (hereinafter called the Act) for the development and enforcement of State standards applicable to State and local government employees in States without approved private employee plans. Although section 2(b) of the Act sets forth the policy of assuring every working man and woman safe and healthful working conditions, State and local government agencies are excluded from the definition of ''employer'' in section 3(5). Only under section 18 of the Act are such public employees ensured protection under the provisions of an approved State plan. Where no such plan is in effect with regard to private employees, State and local government employees have not heretofore been assured any protections under the Act. Section 18(b), however, permits States to submit plans with respect to any occupational safety and health issue with respect to which a Federal standard has been promulgated under section 6 of the Act. Under §1902.2(c) of this chapter, an issue is defined as ''any * * * industrial, occupational, or hazard grouping that is found to be administratively practicable and * * * not in conflict with the purposes of the Act.'' Since Federal standards are in effect with regard to hazards found in public employment, a State plan covering this occupational category meets the definition of section 18 and the regulations. It is the purpose of this part to assure the availability of the protections of the Act to public employees, where no State plan covering private employees is in effect, by adapting the requirements and procedures applicable to State plans covering private employees to the situation where State coverage under section 18(b) is proposed for public employees only.

(b) In adopting these requirements and procedures, consideration should be given to differences between public and private employment. For instance, a system of monetary penalties applicable to violations of public employers may not in all cases be necessarily the most appropriate method of achieving compliance. Further, the impact of the lack of Federal enforcement authority application to public employers requires certain adjustments of private employer plan procedures in adapting them to plans covering only public employees in a State.

§ 1956.2 General policies.

(a) *Policy*. The Assistant Secretary of Labor for Occupational Safety and Health (hereinafter referred to as the

Assistant Secretary) will approve a State plan which provides an occupational safety and health program for the protection of State and local government employees (hereinafter State and local government employees are referred to as public employees) that in his judgment meets or will meet the criteria set forth in §1956.10. Included among these criteria is the requirement that the State plan for public employees (hereinafter such a plan will be referred to as the plan) provides for the development and enforcement of standards relating to hazards in employment covered by the plan which are or will be at least as effective in providing safe and healthful employment and places of employment for public employees as standards promulgated and enforced under section 6 of the Act. In determining whether a plan satisfies the requirement of effectiveness, the Assistant Secretary will measure the plan against the indices of effectiveness, set forth in §1956.11.

(b) *Developmental plan.* (1) A State plan for an occupational safety and health program for public employees may be approved although, upon submission, it does ot fully meet the criteria set forth in §1956.10, if it includes satisfactory assurances by the State that it will take the necessary steps to bring the program into conformity with these criteria within the 3-year period immediately following the commencement of the plan's operation. In such a case, the plan shall include the specific actions the State proposes to take, and a time schedule for their accomplishment which is not to exceed 3 years, at the end of which the plan will meet the criteria in §1956.10. A developmental plan shall include the dates within which intermediate and final action will be accomplished. Although administrative actions, such as stages for application of standards and enforcement, related staffing, development of regulations may be developmental, to be considered for approval, a State plan for public employees must contain at time of plan approval basic State legislative and/or executive authority under which these actions will be taken. If necessary program changes require further implementing executive action by the Governor or supplementary legislative action by the State, a copy of the appropriate order, or the bill or a draft of legislation that will be or has been proposed for enactment shall be submitted, accompanied by:

(i) A statement of the Governor's support of the legislation or order and

(ii) A statement of legal opinion that the proposed legislation or executive action will meet the requirements of the Act and this part in a manner consistent with the State's constitution and laws.

(2) On the basis of the State's submission, the Assistant Secretary will approve the plan if he finds that there is a reasonable expectation that the plan for public employees will meet the criteria in §1956.10 within the indicated 3 year period. In such a case, the Assistant Secretary shall not make a determination that a State is fully applying the criteria in §1956.10 until the State has completed all the developmental steps specified in the plan which are designed to make it at least as effective as the Federal program for the private sector, and the Assistant Secretary has had at least 1 year to evaluate the plan on the basis of actual operations following the completion of all developmental steps. If at the end of 3 years from the date of commencement of the plan's operation, the State is found by the Assistant Secretary, after affording the State notice and an opportunity for a hearing, not to have substantially completed the developmental steps of the plan, he shall withdraw the approval of the plan.

(3) Where a State plan approved under part 1902 of this chapter is discontinued, except for its public employee component, or becomes approved after approval of a plan under this part, the developmental period applicable to the public employee component of the earlier plan will be controlling with regard to any such public employee coverage. For good cause, a State may demonstrate that an additional period of time is required to make adjustments on account of the transfer from one type of plan to another.

(c) *Scope of a State plan for public employees.* (1) A State plan for public employees must provide for the coverage

of both State and local government employees to the full extent permitted by the State laws and constitution. The qualification ''to the extent permitted by its law'' means only that where a State may not constitutionally regulate occupational safety and health conditions in certain political subdivisions, the plan may exclude such political subdivision employees from coverage.

(2) The State shall not exclude any occupational, industrial, or hazard grouping from coverage under its plan unless the Assistant Secretary finds that the State has shown there is no necessity for such coverage.

Subpart B—Criteria

§ 1956.10 Specific criteria.

(a) *General*. A State plan for public employees must meet the specific criteria set forth in this section.

(b) *Designation of State agency*. (1) The plan shall designate a State agency or agencies which will be responsible for administering the plan throughout the State.

(2) The plan shall also describe the authority and responsibilities vested in such agency or agencies. The plan shall contain assurances that any other responsibilities of the designated agency shall not detract significantly from the resources and priorities assigned to the administration of the plan.

(3) A State agency or agencies must be designated with overall responsibility for administering the plan throughout the State. Subject to this overall responsibility, enforcement of standards may be delegated to an appropriate agency having occupational safety and health responsibilities or expertise throughout the State. Included in this overall responsibility are the requirements that the designated agency have, or assure the provision of necessary qualified personnel, legal authority necessary for the enforcement of the standards and make reports as required by the Assistant Secretary.

(c) *Standards*. The State plan for public employees shall include, or provide for the development or adoption of, standards which are or will be at least as effective as those promulgated under section 6 of the Act. The plan shall also contain assurances that the State will continue to develop or adopt such standards. Indices of the effectiveness of standards and procedures for the development or adoption of standards against which the Assistant Secretary will measure the plan in determining whether it is approvable are set forth in § 1956.11(b).

(d) *Enforcement*. (1) The State plan for public employees shall provide a program for the enforcement of the State standards which is, or will be, at least as effective in assuring safe and healthful employment and places of employment as the standards promulgated by section 6 of the Act; and provide assurances that the State's enforcement program for public employees will continue to be at least as effective in this regard as the Federal program in the private sector. Indices of the effectiveness of a State's enforcement plan against which the Assistant Secretary will measure the plan in determining whether it is approvable are set forth in § 1956.11(c).

(2) The plan shall require State and local government agencies to comply with all applicable State occupational safety and health standards included in the plan and all applicable rules issued thereunder, and employees to comply with all standards, rules, and orders applicable to their conduct.

(e) *Right of entry and inspection*. The plan shall contain adequate assurances that inspectors will have a right to enter covered workplaces which is at least as effective as that provided in section 8 of the Act for the purpose of inspection or monitoring. Where such entry is refused, the State agency or agencies shall have the authority through appropriate legal process to compel such entry.

(f) *Prohibition against advance notice*. The State plan shall contain a prohibition against advance notice of inspections. Any exceptions must be expressly authorized by the head of the designated agency or agencies or his representative and such exceptions may be no broader than those authorized under the Act and the rules published in part 1903 of this chapter relating to advance notice.

(g) *Personnel*. The plan shall provide assurances that the designated agency

or agencies and all government agencies to which authority has been delegated, have, or will have, a sufficient number of adequately trained and qualified personnel necessary for the enforcement of standards. For this purpose, qualified personnel means persons employed on a merit basis, including all persons engaged in the development of standards and the administration of the plan. Subject to the results of evaluations, conformity with the Standards for a Merit System of Personnel Administration, 45 CFR part 70, issued by the Secretary of Labor, including any amendments thereto, and any standards prescribed by the U.S. Civil Service Commission, pursuant to section 208 of the Intergovernmental Personnel Act of 1970, modifying or superseding such standards, and guidelines on ''at least as effective as'' staffing derived from the Federal private employee program will be deemed to meet this requirement.

(h) *Resources*. The plan shall contain satisfactory assurances through the use of budget, organizational description, and any other appropriate means, that the State will devote adequate funds to the administration and enforcement of the public employee program. The Assistant Secretary will make the periodic evaluations of the adequacy of the resources the State has devoted to the plan.

(i) *Employer records and reports*. The plan shall provide assurances that public employers covered by the plan will maintain records and make reports on occupational injuries and illnesses in a manner similar to that required of private employers under the Act.

(j) *State agency reports to the Assistant Secretary*. The plan shall provide assurances that the designated agency or agencies shall make such reasonable reports to the Assistant Secretary in such form and containing such information as he may from time to time require. The agency or agencies shall establish specific goals consistent with the goals of the Act, including measures of performance, output, and results which will determine the efficiency and effectiveness of the State program for public employees, and shall make periodic reports to the Assistant Secretary on the extent to which the State, in implementation of its plan, has attained these goals. Reports will also include data and information on the implementation of the specific inspection and voluntary compliance activities included within the plan. Further, these reports shall contain such statistical information pertaining to work-related deaths, injuries and illnesses in employments and places of employment covered by the plan as the Assistant Secretary may from time to time require.

§ 1956.11 Indices of effectiveness.

(a) *General*. In order to satisfy the requirements of effectiveness under § 1956.10 (c)(1) and (d)(1), the State plan for public employees shall:

(1) Establish the same standards, procedures, criteria, and rules as have been established by the Assistant Secretary under the act; or

(2) Establish alternative standards, procedures, criteria, and rules which will be measured against each of the indices of effectiveness in paragraphs (b) and (c) of this section to determine whether the alternatives are at least as effective as the Federal program for private employees, where applicable, with respect to the subject of each index. For each index the State must demonstrate by the presentation of factual or other appropriate information that its plan for public employees will, to the extent practicable, be at least as effective as the Federal program for private employees.

(b) *Standards*. (1) The indices for measurement of a State plan for public employees with regard to standards follow in paragraph (b)(2) of this section. The Assistant Secretary will determine whether the State plan for public employees satisfies the requirements of effectiveness with regard to each index as provided in paragraph (a) of this section.

(2) The Assistant Secretary will determine whether the State plan for public employees:

(i) Provides for State standards which are or will be at least as effective as the standards promulgated under section 6 of the Act. In the case of any State standards dealing with toxic materials or harmful physical agents, they should adequately assure,

to the extent feasible, that no employee will suffer material impairment of health or functional capacity, even if such employee has regular exposure to the hazard dealt with by such standard for the period of his working life, by such means as, in the development and promulgation of standards, obtaining the best available evidence through research, demonstration, experiments, and experience under this and any other safety and health laws.

(ii) Provides an adequate method to assure that its standards will continue to be at least as effective as Federal standards, including Federal standards which become effective subsequent to any approval of the plan.

(iii) Provides a procedure for the development and promulgation of standards which allows for the consideration of pertinent factual information and affords interested persons, including employees, employers and the public, an opportunity to participate in such processes, by such means as establishing procedures for consideration of expert technical knowledge, and providing interested persons, including employers, employees, recognized standards-producing organizations, and the public, an opportunity to submit information requesting the development or promulgation of new standards or the modification or revocation of existing standards and to participate in any hearings. This index may also be satisfied by such means as the adoption of Federal standards, in which case the procedures at the Federal level before adoption of a standard under section 6 may be considered to meet the conditions of this index.

(iv) Provides authority for the granting of variances from State standards upon application of a public employer or employers which correspond to variances authorized under the Act, and for consideration of the views of interested parties, by such means as giving affected employees notice of each application and an opportunity to request and participate in hearings or other appropriate proceedings relating to applications for variances.

(v) Provides for prompt and effective standards setting actions for the protection of employees against new and unforeseen hazards, by such means as the authority to promulgate emergency temporary standards. Such authority is particularly appropriate for those situations where public employees are exposed to unique hazards for which existing standards do not provide adequate protection.

(vi) Provides that State standards contain appropriate provision for the furnishing to employees of information regarding hazards in the workplace, including information about suitable precautions, relevant symptoms, and emergency treatment in case of exposure; by such means as labelling, posting, and, where appropriate, results of medical examinations, being furnished only to appropriate State officials and, if the employee so requests, to his physician.

(vii) Provides that State standards where appropriate, contain specific provision for the protection of employees from exposure to hazards, by such means as containing appropriate provision for the use of suitable protective equipment and for control or technological procedures with respect to such hazards, including monitoring or measuring such exposure.

(c) *Enforcement*. (1) The indices for measurement of a State plan for public employees with regard to enforcement follow in paragraph (c)(2) of this section. The Assistant Secretary will determine whether the plan satisfies the requirements of effectiveness with regard to each index as provided in paragraph (a) of this section.

(2) The Assistant Secretary will determine whether the State plan for public employees:

(i) Provides for inspection of covered workplaces in the State by the designated agency or agencies or any other agency which is duly delegated authority, including inspections in response to complaints where there are reasonable grounds to believe a hazard exists, in order to assure, so far as possible, safe and healthful working conditions for covered employees by such means as providing for inspections under conditions such as those provided in section 8 of the Act.

(ii) Provides an opportunity for employees and their representative, before, during, and after inspections, to

bring possible violations to the attention of the State or local agency with enforcement responsibility in order to aid inspections, by such means as affording a representative of the employer, and a representative authorized by employees, an opportunity to accompany the inspector during the physical inspection of the workplace, or where there is no authorized representative, provide for consultation by the inspector with a reasonable number of employees.

(iii) Provides for notification of employees, or their representatives, when the State decides not to take compliance action as a result of violations alleged by such employees or their representative, and further provides for informal review of such decisions, by such means as written notification of decisions not to take compliance action and the reasons therefor, and procedures for informal review of such decisions and written statements of the disposition of such review.

(iv) Provides that public employees be informed of their protections and obligations under the Act, including the provisions of applicable standards, by such means as the posting of notices or other appropriate sources of information.

(v) Provides necessary and appropriate protection to an employee against discharge or discrimination in terms and conditions of employment because he has filed a complaint, testified, or otherwise acted to exercise rights under the State program for public employees for himself or others, by such means as providing for appropriate sanctions against the State or local agency for such actions, and by providing for the withholding, upon request, of the names of complainants from the employer.

(vi) Provides that public employees have access to information on their exposure to toxic materials or harmful physical agents and receive prompt information when they have been or are being exposed to such materials or agents in concentrations or at levels in excess of those prescribed by the applicable safety and health standards, by such means as the observation by employees of the monitoring or measuring of such materials or agents, employee access to the records of such monitoring or measuring, prompt notification by a public employer to any employee who has been or is being exposed to such agents or materials in excess of the applicable standards, and information to such employee of corrective action being taken.

(vii) Provides procedures for the prompt restraint or elimination of any conditions or practices in covered places of employment which could reasonably be expected to cause death or serious physical harm immediately or before the imminence of such danger can be eliminated through the enforcement procedures otherwise provided for in the plan, by such means as immediately informing employees and employers of such hazards, taking steps to obtain immediate abatement of the hazard by the employer, and, where appropriate, authority to initiate necessary legal proceedings to require such abatement.

(viii) Provides that the designated agency (or agencies) and any agency to which it has duly delegated authority, will have the necessary legal authority for the enforcement of standards by such means as provisions for appropriate compulsory process to obtain necessary evidence or testimony in connection with inspection and enforcement proceedings.

(ix) Provides for prompt notice to public employers and employees when an alleged violation of standards has occurred, including the proposed abatement requirements, by such means as the issuance of a written citation to the public employer and posting of the citation at or near the site of the violation; further provides for advising the public employer of any proposed sanctions, wherever appropriate, by such means as a notice to the employer by certified mail within a reasonable time of any proposed sanctions.

(x) Provides effective sanctions against public employers who violate State standards and orders, or applicable public agency standards, such as those prescribed in the Act. In lieu of monetary penalties a complex of enforcement tools and rights, such as various forms of equitable remedies

available to the designee including administrative orders; availability of employee rights such as right to contest citations, and provisions for strengthened employee participation in enforcement may be demonstrated to be as effective as monetary penalties in achieving complianace in public employment. In evaluating the effectiveness of an alternate system for compelling compliance, elements of the enforcement educational program such as a system of agency self inspection procedures, and in-house training programs, and employee complaint procedures may be taken into consideration.

(xi) Provides for an employer to have the right of review of violations alleged by the State or any agency to which it has duly delegated authority, abatement periods and proposed penalties, where appropriate, for employees or their representatives to challenge the reasonableness of the period of time fixed in the citation for the abatement of the hazard, and for employees or their representatives to have an opportunity to participate in review, proceedings, by such means as providing for admininistrative review, with an opportunity for a full hearing on the issues.

(xii) Provides that the State will undertake programs to encourage voluntary compliance by public employers and employees by such means as conducting training and consultation with such employers and employees, and encouraging agency self-inspection programs.

(d) *Additional indices*. Upon his own motion, or after consideration of data, views, and arguments received in any proceedings held under subpart C of this part, the Assistant Secretary may prescribe additional indices for any State plan for public employees which shall be in furtherance of the purpose of this section.

Subpart C—Approval, Change, Evaluation and Withdrawal of Approval Procedures

§ 1956.20 Procedures for submission, approval and rejection.

The procedures contained in subpart C of part 1902 of this chapter shall be applicable to submission, approval, and rejection of State plans submitted under this part, except that the information required in § 1902.20(b)(1)(iii) would not be included in decisions of approval.

§ 1956.21 Procedures for submitting changes.

The procedures contained in part 1953 of this chapter shall be applicable to submission and consideration of developmental, Federal program, evaluation, and State-initiated change supplements to plans approved under this part.

§ 1956.22 Procedures for evaluation and monitoring.

The procedures contained in part 1954 of this chapter shall be applicable to evaluation and monitoring of State plans approved under this part, except that the decision to relinquish Federal enforcement authority under section 18(e) of the Act is not relevant to Phase II and III monitoring under § 1954.2 and the guidelines of exercise of Federal discretionary enforcement authority provided in § 1954.3 are not applicable to plans approved under this part. The factors listed in § 1902.37(b) of this chapter, except those specified in § 1902.37(b)(11) and (12), which would be adapted to the State compliance program, provide the basis for monitoring.

§ 1956.23 Procedures for certification of completion of development and determination on application of criteria.

The procedures contained in §§ 1902.33 and 1902.34 of this chapter shall be applicable to certification of completion of developmental steps under plans approved in accordance with this part. Such certification shall initiate intensive monitoring of actual operations of the developed plan, which shall continue for at least a year after certification, at which time a determination shall be made under the procedures and criteria of §§ 1902.38, 1902.39, 1902.40 and 1902.41, that on the basis of actual operations, the criteria set forth in §§ 1956.10 and 1956.11 of this part are being applied under the plan. The factors listed in § 1902.37(b) of this chapter, except those specified in § 1902.37(b)(11) and (12) which would be adapted to the

State's compliance program provide the basis for making the determination of operational effectiveness.

§ 1956.24 Procedures for withdrawal of approval.

The procedures and standards contained in part 1955 of this chapter shall be applicable to the withdrawal of approval of plans approved under this part 1956, except that (because these plans, as do public employee programs aproved and financed in connection with a State plan covering private employees, must cover all employees of State and local agencies in a State whenever a State is constitutionally able to do so, at least developmentally), no industrial or occupational issues may be considered a separable portion of a plan under § 1955.2(a)(10); and, as Federal standards and enforcement do not apply to State and local government employers, withdrawal of approval of a plan approved under this part 1956 could not bring about application of the provisions of the Federal Act to such employers as set out in § 1955.4 of this chapter.

Subpart D—General Provisions and Conditions [Reserved]

Subpart E—Connecticut

SOURCE: 43 FR 51390, Nov. 3, 1978, unless otherwise noted.

§ 1956.40 Description of the plan.

(a) The plan designates the Connecticut Department of Labor as the State agency responsible for administering the plan throughout the State. The State has adopted all Federal standards promulgated as of September 1977 and has given assurances that it will continue to adopt all Federal standards, revisions, and amendments. The State further assured that in those situations where public employees are exposed to unique hazards for which existing standards do not provide adequate protection, effective State standards will be adopted. The plan includes legislation, Public Act 73–379, passed by the Connecticut Legislature in 1973 and amended as follows: P.A. 74–176, P.A. 75–285, P.A. 77–107, and P.A. 77–610. Under the legislation the Connecticut Department of Labor, Occupational Safety and Health Division has full authority to enforce and administer all laws and rules protecting the safety and health of employees of the State and its political subdivisions. The plan is accompanied by a statement of the Governor's support and a legal opinion that the Connecticut legislation meets the requirements of the Occupational Safety and Health Act of 1970 and is in accord with the constitution of the State.

(b) The plan establishes procedures for variances and the protection of employees from hazards under a variance; insures inspection in response to complaints; provides employer and employee representatives an opportunity to accompany inspectors and to call attention to possible violations before, during, and after inspections; notification to employees or their representatives when no compliance action is taken as a result of alleged violations, including informal review; notification of employees of their protection; protection of employees against discharge or discrimination in terms and conditions of employment; provision for prompt notices to employers and employees of violations of standards and abatement requirements; sanctions against employers for violation of standards and orders; employer's right to appeal citations for violations, abatement periods and proposed penalties; employee's right to appeal abatement periods; and employee participation in review proceedings. Also included are provisions for right of entry for inspection, ''prohibition'' of advance notice of inspection and the requirement for both employers and employees to comply with the applicable rules, standards, and orders, and employer obligations to maintain records and provide reports as required. Further, the plan provides assurances of a fully trained adequate staff and sufficient funding.

(c) The plan includes the following documents as of the date of approval:

(1) The plan document and appendixes submitted January 30, 1978;

(2) Letter from the Commissioner, Connecticut Department of Labor,

dated September 19, 1978, providing supplemental assurances.

§ 1956.41 Where the plan may be inspected.

A copy of the plan may be inspected and copied during normal business hours at the following locations: Office of State programs, 2100 M Street NW, Room 149, Washington, DC 20210; Office of the Regional Administrator, Occupational Safety and Health Administration, Room 1804, John F. Kennedy Federal Building, Boston, Mass. 02203; Connecticut Department of Labor, 200 Folly Brook Boulevard, Wethersfield, Conn. 06109.

§ 1956.43 Developmental schedule.

The Connecticut plan is developmental. The following is a schedule of major developmental steps as provided by the plan:

(a) A new State poster will be printed, by December 15, 1978, in order to reflect coverage of the public sector only.

(b) Standards identical to or at least as effective as all existing Federal standards will be adopted by February 1, 1979.

(c) Connecticut regulations equivalent to the following Federal provisions will be revised by April 1, 1979, to show coverage of the public sector only and to accurately reflect the current program: 29 CFR part 1903 (Inspections, Citations, and Proposed Penalties); 29 CFR part 1904 (Recording and Reporting Occupational Injuries and Illnesses); 29 CFR part 1905 (Variance Rules); 29 CFR part 2200 (Review Commission); and the Field Operations Manual.

(d) The State will submit revised and updated provisions dealing with employee discrimination by May 1, 1979.

(e) The State will prepare by June 1, 1979, a comprehensive list of government entities whose employees are covered by the plan, giving the number of employees for each entity, describing the work performed, and assigning for each entity a standard industrial classification (SIC) code.

(f) The State will resubmit its plan in the required outline format by October 1, 1979.

§ 1956.44 Completion of developmental steps and certification.

(a) In accordance with 29 CFR 1956.43(f), Connecticut's reformatted and revised public employee only plan and narrative description (including background information on program operations) were approved by the Assistant Secretary on August 3, 1983.

(b) In accordance with 29 CFR 1956.43(a), Connecticut's safety and health poster for public employees only was approved by the Assistant Secretary on August 3, 1983.

(c) In accordance with 29 CFR 1956.43(b), Connecticut has promulgated standards identical to all basic Federal standards in 29 CFR parts 1910, 1926, and 1928. The State has continued to adopt Federal standards, amendments and corrections as noted in separate standards approval notices.

(d) In accordance with 29 CFR 1956.43(c), Connecticut promulgated rules for inspections, citations, and proposed penalties (Administrative Regulation Section 31–371–1 through 20) parallel to 29 CFR part 1903; recording and reporting occupational injuries and illness (Administrative Regulation Section 31–374–1 through 15 parallel to 29 CFR part 1904; rules of practices for variances (Administrative Regulation Section 31–372–1 through 51) parallel to 29 CFR part 1905; and review commission procedures (Administrative Regulation Section 31–376–1 through 61) parallel to 29 CFR part 2200. In addition, Connecticut adopted Field Operations and Industrial Hygiene Manuals identical to the Federal. These supplements were approved by the Assistant Secretary on August 3, 1983.

(e) In accordance with 29 CFR 1956.43(d), Connecticut's employee discrimination provisions (Administrative Regulation Section 31–379–1 through 22) were approved by the Assistant Secretary on August 3, 1983.

(f) In accordance with 29 CFR 1956.43(e), Connecticut's comprehensive list classifying governmental entities covered by the plan was approved by the Assistant Secretary on August 3, 1983.

(g) In accordance with 29 CFR 1956.10(g), a State is required to have a sufficient number of adequately trained and competent personnel to

discharge its responsibilities under the plan. The Connecticut Public Employee Only State plan provides for three (3) safety compliance officers and one (1) health compliance officer as set forth in the Connecticut Fiscal Year 1986 grant. This staffing level meets the ''fully effective'' benchmarks established for Connecticut for both safety and health.

(h) In accordance with § 1956.23 of this chapter, the Connecticut occupational safety and health public employee only plan was certified effective August 19, 1986 as having completed all developmental steps specified in the plan as approved October 2, 1978, on or before October 2, 1979. This certification attests to the structured completeness of the plan, but does not render judgment on adequacy of performance.

[48 FR 37027, Aug. 16, 1983, as amended at 51 FR 32454, Sept. 12, 1986]

Subpart F—New York

AUTHORITY: Secs. 8(g), 18, 84 Stat. 1600, 1608 (29 U.S.C. 657(g), 667); 29 CFR part 1956, Secretary of Labor's Order 9–83 (48 FR 35736).

SOURCE: 49 FR 23000, June 1, 1984, unless otherwise noted.

§ 1956.50 Description of the plan as certified.

(a) *Authority and scope.* The New York State Plan for Public Employee Occupational Safety and Health received initial OSHA approval on June 1, 1984, and was certified as having successfully completed its developmental steps on August 16, 2006. The plan designates the New York Department of Labor as the State agency responsible for administering the plan throughout the State. The plan includes legislation, the New York Act (Public Employee Safety and Health Act, Chapter 729 of the Laws of 1980/Article 2, Section 27–a of the New York State Labor Law), enacted in 1980, and amended on April 17, 1984; August 2, 1985; May 25 and July 22, 1990; April 10, 1992; June 28, 1993; and April 1, 1997. Under this legislation, the Commissioner of Labor has full authority to enforce and administer all laws and rules protecting the safety and health of all employees of the State and its political subdivisions. In response to OSHA's concern that language in section 27–a.2 of the New York Act, regarding the Commissioner of Education's authority with respect to school buildings, raised questions about the coverage under the plan of public school employees, in 1984 New York submitted amendments to its plan consisting of Counsel's opinion and an assurance that public school employees are fully covered under the terms of the PESH Act.

(b) *Standards.* The New York plan, as of revisions dated April 28, 2006, provides for the adoption of all Federal OSHA standards promulgated as of that date, and for the incorporation of any subsequent revisions or additions thereto in a timely manner, including in response to Federal OSHA emergency temporary standards. The procedure for adoption of Federal OSHA standards calls for publication of the Commissioner of Labor's intent to adopt a standard in the New York State Register 45 days prior to such adoption. Subsequent to adoption and upon filing of the standard with the Secretary of State, a notice of final action will be published as soon as is practicable in the *State Register*. The plan also provides for the adoption of alternative or different occupational safety and health standards if a determination is made by the State that an issue is not properly addressed by OSHA standards and is relevant to the safety and health of public employees. In such cases, the Commissioner of Labor will develop an alternative standard to protect the safety and health of public employees in consultation with the Hazard Abatement Board, or on his/her own initiative. The procedures for adoption of alternative standards contain criteria for consideration of expert technical advice and allow interested persons to request development of any standard and to participate in any hearing for the development or modification of standards.

(c) *Variances.* The plan includes provisions for the granting of permanent and temporary variances from State standards in terms substantially similar to the variance provisions contained in the Federal program. The State provisions require employee notification of variance applications and

provide for employee participation in hearings held on variance applications. Variances may not be granted unless it is established that adequate protection is afforded employees under the terms of the variance, and variances may have only future effect.

(d) *Employee notice and discrimination protection*. The plan provides for notification to employees of their protections and obligations under the plan by such means as a State poster and required posting of notices of violations. The plan also provides for protection of employees against discharge or discrimination resulting from exercise of their rights under the State's Act in terms essentially identical to section 11(c) of the OSH Act.

(e) *Inspections and enforcement*. The plan provides for inspection of covered workplaces, including inspections in response to employee complaints. If a determination is made that an employee complaint does not warrant an inspection, the complainant shall be notified, in writing, of such determination and afforded an opportunity to seek informal review of the determination. The plan provides the opportunity for employer and employee representatives to accompany the inspector during an inspection for the purpose of aiding in the inspection. The plan also provides for right of entry for inspection and a prohibition of advance notice of inspection. In lieu of first-instance monetary sanctions for violations, the plan establishes a system for compelling compliance under which public employers are issued notices of violation and orders to comply. Such notices fix a reasonable period of time for compliance. If compliance is not achieved by the time of a follow-up inspection, daily failure-to-abate penalties of up to $50 for non-serious violations and up to $200 for serious violations, will be proposed. The Commissioner of Labor may seek judicial enforcement of orders to comply by commencing a proceeding pursuant to Article 78 of the New York Civil Practice Law. In addition, the plan provides for expedited judicial enforcement when non-compliance is limited to non-payment of penalties.

(f) *Review procedures*. Under the plan, public employers and employees may seek formal administrative review of New York Department of Labor citations, including penalties and the reasonableness of the abatement periods, by petitioning the New York Industrial Board of Appeals (IBA) no later than 60 days after the issuance of the citation. The IBA is the independent State agency authorized by section 27–a(6)(c) of the New York Act to consider petitions from affected parties for review of the Commissioner of Labor's determinations. A contest does not automatically stay a notice of violation, penalty or abatement date; a stay must be granted from the IBA. Judicial review of any decision of the IBA may be sought pursuant to Article 78 of the New York Civil Practice Law. Prior to contest, employers, employees and other affected parties may seek informal review of citations, penalties and abatement dates by the Department of Labor by requesting an informal conference in writing within 20 working days from the receipt of citation. If the informal conference does not produce agreement, the affected party may seek formal administrative review with the IBA. Public employees or their authorized representatives have the additional right under 12 NYCRR Part 805 to contest the abatement period by filing a petition with the Commissioner within 15 working days of the posting of the citation by filing a petition with the Department of Labor, or later if good cause for late filing is shown. If the Commissioner denies the employee contest of abatement period under Part 805 in whole or in part, the complaint will automatically be forwarded to the IBA for review. Under the IBA rules, public employees or their representatives may request permission to participate in an employer-initiated review process as ''intervenors.'' The plan includes an April 28, 2006, assurance that should an employee or employee representative request intervenor status in an employer-initiated case, the State will appropriately inform the IBA of its support for the request. Should an employee's or employee representative's request for participation be denied, the State will seek immediate corrective action to guarantee the right to employee party status in employer-initiated cases. The

period fixed in the plan for contesting notices of violation is 60 calendar days, which is significantly longer than the 15 working day period allowed under the Federal OSHA program. However, New York has provided assurance, by Counsel's opinion of March 3, 1984, that it has the authority under Article 78 of the New York Civil Practice Law to obtain judicial enforcement of an uncontested order to comply upon expiration of the abatement period, regardless of whether the 60 day contest period has expired. New York has also assured that should the State Labor Department's interpretation be successfully challenged, appropriate legislative correction would be sought.

(g) *Staffing and resources.* The plan as revised April 28, 2006, provides assurances of a fully trained, adequate staff, including 29 safety and 21 health compliance officers for enforcement inspections and 11 safety and 9 health consultants to perform consultation services in the public sector. The State has also given satisfactory assurances of continued adequate funding to support the plan.

(h) *Records and reports.* The plan provides that public employers in New York will maintain appropriate records and make timely reports on occupational injuries and illnesses in a manner substantially identical to that required for private sector employers under Federal OSHA. New York has assured that it will continue its participation in the Bureau of Labor Statistics Annual Survey of Injuries and Illnesses in the public sector. The plan also contains assurances that the Commissioner of Labor will provide reports to OSHA in such form as the Assistant Secretary may require, and that New York will participate in OSHA's Integrated Management Information System.

(i) *Voluntary compliance programs.* The plan provides for training for public employers and employees; seminars to familiarize affected public employers and employees with applicable standards, requirements and safe work practices; and an on-site consultation program in the public sector to provide services to public employers upon request.

[71 FR 47087, Aug. 16, 2006]

§ 1956.51 Developmental schedule.

The New York plan is developmental. The following is a schedule of major developmental steps as provided in the plan:

(a) Adopt all OSHA standards promulgated as of July 1, 1983 (within three months after plan approval).

(b) Promulgate regulations for inspections, citations and abatement, equivalent to 29 CFR part 1903 (within three years after plan approval).

(c) Submit State poster (within six months after plan approval).

(d) Extend BLS Survey of Injuries and Illnesses to State and local government (within one year after plan approval).

(e) Promulgate regulations for granting variances, equivalent to 29 CFR part 1905 (within one year after plan approval).

(f) Promulgate regulations for injury/illness recordkeeping, equivalent to 29 CFR part 1904 (within two years after plan approval).

(g) Develop employee nondiscrimination procedures (within three years after plan approval).

(h) Promulgate procedures for review of contested cases (within three years after plan approval).

(i) Promulgate regulations for development of alternative State standards, equivalent to 29 CFR part 1911 (within three years after plan approval).

(j) Develop Field Operations Manual (within three years after plan approval).

(k) Develop Industrial Hygiene Manual (within three years after plan approval).

(l) Develop on-site consultation procedures for state and local government employers (within three years after plan approval).

(m) Fully implement public employer/employee training and education program (within three years after plan approval).

[49 FR 23000, June 1, 1984, as amended at 52 FR 20073, May 29, 1987]

§ 1956.52 Completed developmental steps and certification.

(a) In accordance with 29 CFR 1956.51(a), the State of New York promulgated standards identical to all Federal OSHA standards as of July 1,

1983. A supplement to the State plan documenting this accomplishment was initially approved by the Assistant Secretary on August 26, 1986 (51 FR 30449). Subsequently, all OSHA standards promulgated through April 28, 2006, have been adopted as New York State standards applicable to public employees. These identical standards; the State's different Air Contaminants Standard (1910.1000); the additional hazard communication requirements, as applicable to public sector employers only, in the New York Toxic Substances Act; and the State's independent *Workplace Violence Prevention* law, were approved by the Assistant Secretary on August 16, 2006.

(b) In accordance with 29 CFR 1956.51(b), New York has promulgated regulations for inspections, citations and abatement equivalent to 29 CFR part 1903 at 12 NYCRR Part 802 and implementing procedures in the State compliance manual, as contained in the State's April 28, 2006, revised plan, which were approved by the Assistant Secretary on August 16, 2006.

(c) In accordance with 29 CFR 1956.51(c), the New York safety and health poster for public employees only, which was originally approved by the Assistant Secretary on May 16, 1985 (50 FR 21046), was approved, as contained in the State's April 28, 2006, revised plan, by the Assistant Secretary on August 16, 2006.

(d) In accordance with 29 CFR 1956.51(d), the State extended its participation in the Bureau of Labor Statistics (BLS) Survey of Injuries and Illnesses to the public sector. A supplement documenting this action was approved by the Assistant Secretary on December 29, 1989 (55 FR 1204) and is contained in the State's April 28, 2006, revised plan, which was approved by the Assistant Secretary on August 16, 2006.

(e) In accordance with 29 CFR 1956.51(e), the State promulgated regulations for granting variances equivalent to 29 CFR part 1905 at 12 NYCRR Part 803, which were approved by the Assistant Secretary on December 29, 1989 (55 FR 1204). These regulations, as revised and supplemented by implementing procedures in the State's Field Operations Manual, are contained in the April 28, 2006, revised State plan, and were approved by the Assistant Secretary on August 16, 2006.

(f) In accordance with 29 CFR 1956.51(f), the State initially promulgated regulations for injury/illness recordkeeping, equivalent to 29 CFR part 1904, which were approved by the Assistant Secretary on December 29, 1989 (55 FR 1204). The State's revised recordkeeping regulation, 12 NYCRR Part 801; corresponding instructions (SH 901); and supplemental assurances concerning amendments to the SH 901 Instructions, after-hours reporting of fatalities and catastrophes, required reporting of delayed hospitalizations, protected activity, and employee rights to receive a copy of the Annual Summary of workplace injuries and illnesses, are contained in the April 28, 2006, revised plan, and were approved by the Assistant Secretary on August 16, 2006.

(g) In accordance with 29 CFR 1956.51(g), the State developed and adopted employee non-discrimination procedures equivalent to 29 CFR part 1977, which were approved by the Assistant Secretary on December 29, 1989 (55 FR 1204). Updated procedures, as contained in the April 28, 2006, revised plan, were approved by the Assistant Secretary on August 16, 2006.

(h) In accordance with 29 CFR 1956.51(h), the State adopted procedures for the review of contested cases equivalent to 29 CFR part 2200, which were approved by the Assistant Secretary on December 29, 1989 (55 FR 1204). The State's contested case procedures at Section 101 of the Labor Law; the ''Rules of Procedure and Practice'' of the Industrial Board of Appeals, 12 NYCRR Chapter 1, Subchapter B, Parts 65 and 66; and 12 NYCRR 805, as contained in the April 28, 2006, revised plan, were approved by the Assistant Secretary on August 16, 2006.

(i) In accordance with 29 CFR 1956.51(i), the State revised its plan to reflect its procedures for the adoption of State standards identical to OSHA safety and health standards, which were approved by the Assistant Secretary on December 29, 1989 (55 FR 1204). Subsequently, the State's procedures were revised to provide that the

Commissioner of Labor, in consultation with the Hazard Abatement Board, or on his/her own initiative, can propose alternative or different occupational safety and health standards if a determination is made that an issue is not properly addressed by Federal OSHA standards and is necessary for the protection of public employees. The procedures for adoption of alternative standards contain criteria for development and consideration of expert technical knowledge in the field to be addressed by the standard and allow interested persons to submit information requesting development or promulgation of any standard and to participate in any hearing for the development, modification or establishment of standards. These procedures are contained in the April 28, 2006, revised plan, and were approved by the Assistant Secretary on August 16, 2006.

(j) In accordance with 29 CFR 1956.51(j), the State has developed a Field Operations Manual which parallels Federal OSHA's Field Operations Manual, CPL 02–00–045 [CPL 2.45B], incorporates other Federal compliance policy directives, and contains procedures for unique State requirements. This manual is contained in the April 28, 2006, revised plan, and was approved by the Assistant Secretary on August 16, 2006.

(k) In accordance with 29 CFR 1956.51(k), the State adopted the Federal Industrial Hygiene Manual, including changes one (1) and two (2), through April 7, 1987, which was approved by the Assistant Secretary on December 29, 1989 (55 FR 1204). The State's subsequent adoption of the OSHA Technical Manual is documented in the April 28, 2006, revised State plan and was approved by the Assistant Secretary on August 16, 2006.

(l) In accordance with 29 CFR 1956.51(l), the State issued a directive implementing an on-site consultation program in the public sector, which was approved by the Assistant Secretary on December 29, 1989 (55 FR 1204). The State's current Consultation Policy and Procedures Manual and its description of New York's on-site consultation program and other compliance assistance efforts, as contained in the April 28, 2006, revised plan, were approved by the Assistant Secretary on August 16, 2006.

(m) In accordance with 29 CFR 1956.51(m), the State has developed and implemented a public employer and employee training and education program with procedures described in the Field Operations Manual, which, as contained in the April 28, 2006, revised plan, was approved by the Assistant Secretary on August 16, 2006.

(n) A revised State plan as submitted on April 28, 2006, was approved and in accordance with 29 CFR 1956.23 of this chapter, the New York occupational safety and health State plan for public employees only was certified on August 16, 2006 as having successfully completed all developmental steps specified in the plan as initially approved on June 1, 1984. This certification attests to the structural completeness of the plan, but does not render judgment as to adequacy of performance.

[71 FR 47089, Aug. 16, 2006]

§ 1956.53 [Reserved]

§ 1956.54 Location of basic State plan documentation.

Copies of basic State plan documentation are maintained at the following locations. Specific documents are available upon request, and will also be provided in electronic format, to the extent possible. Contact the Directorate of Cooperative and State Programs, Office of State Programs, U.S. Department of Labor, Occupational Safety and Health Administration, 200 Constitution Avenue, NW., Room N–3700, Washington, DC 20210; Office of the Regional Administrator, U.S. Department of Labor, Occupational Safety and Health Administration, 201 Varick Street, Room 670, New York, New York 10014; and the New York Department of Labor, Public Employee Safety and Health Program, State Office Campus Building 12, Room 158, Albany, New York 12240. Current contact information for these offices (including telephone numbers and mailing addresses) is available on OSHA's Web site, *http://www.osha.gov*.

[71 FR 47090, Aug. 16, 2006]

§ 1956.55 [Reserved]

Subpart G—New Jersey

AUTHORITY: Section 18 of the OSH Act, (29 U.S.C. 667), 29 CFR Part 1902, 29 CFR 1956, and Secretary of Labor's Order No. 3–2000 (65 FR 50017).

SOURCE: 66 FR 2272, Jan. 11, 2001, unless otherwise noted.

§ 1956.60 Description of the plan as initially approved.

(a) *Authority and scope.* The New Jersey State Plan for Public Employee Occupational Safety and Health received initial OSHA approval on January 11, 2001. The plan designates the New Jersey Department of Labor as the State agency responsible for administering the plan throughout the State. The plan includes enabling legislation, Public Employees Occupational Safety and Health Act of 1995 (N.J.S.A. 34:6A–25 *et seq.*), enacted in 1984, and amended on July 25, 1995. Under this legislation, the State Commissioner of Labor has full authority to enforce and administer all laws and rules protecting the safety and health of all employees of the State and its political subdivisions under the Public Employee Occupational Safety and Health program (PEOSH). The Commissioner of Health and Senior Services has authority for occupational health matters including the authority to conduct health inspections, investigations and related activities. However, all standards adoption and enforcement authority for both occupational safety and health remain the responsibility of the New Jersey Department of Labor.

(b) *Standards.* New Jersey has adopted State standards identical to OSHA occupational safety and health standards promulgated as of December 7, 1998, with differences only in its hazard communication and fire protection standards. The State plan includes a commitment to bring those two (2) standards into conformance with OSHA requirements and to update all standards within one year after plan approval. The State plan also provides that future OSHA standards and revisions will be adopted by the State within six (6) months of Federal promulgation, in accordance with 29 CFR 1953.21. Any emergency temporary standards will be adopted within 30 days of Federal adoption. The State will adopt Federal OSHA standards in accordance with the provisions of New Jersey statute, N.J.S.A. 52:14B–5; Federal standards shall be deemed to be duly adopted as State regulations upon publication by the Commissioner of Labor. The plan also provides for the adoption of alternative or different occupational safety and health standards by the Commissioner of Labor in consultation with the Commissioner of Health and Senior Services, the Commissioner of Community Affairs, and the Public Employee Occupational Safety and Health Advisory Board, where no Federal standards are applicable to the conditions or circumstances or where standards more stringent than the Federal are deemed advisable.

(c) *Variances.* The plan includes provisions for the granting of permanent and temporary variances from State standards in terms substantially similar to the variance provisions contained in the OSH Act. The State provisions require employee notification of variance applications as well as employee rights to participate in hearings held on variance applications. Variances may not be granted unless it is established that adequate protection is afforded employees under the terms of the variance. The State has committed to amend its current variance procedures at N.J.A.C. 12:110–6 to bring them into conformance with Federal procedures at 29 CFR Part 1905 within two years after state plan approval.

(d) *Employee notice and discrimination protection.* The plan provides for notification to employees of their protections and obligations under the plan by such means as a State poster, and required posting of notices of violations. The plan also provides for protection of employees against discharge or discrimination resulting from exercise of their rights under the State's Act in terms similar to section 11(c) of the OSH Act. However, employees have 180 days to file complaints of discrimination with the Commissioner of Labor; and the Commissioner is authorized to both investigate and order all appropriate relief. The monetary penalty for

repeated violations (up to $70,000 per violation) may also be applicable to repeated employer acts of discrimination.

(e) *Inspections and enforcement.* The plan provides for inspection of covered workplaces including inspections in response to employee complaints, by both the Department of Labor, and by the Department of Health and Senior Services with regard to health issues. If a determination is made that an employee complaint does not warrant an inspection, the complainant shall be notified, in writing, of such determination and afforded an opportunity to seek informal review of the determination. The plan also provides the opportunity for employer and employee representatives to accompany the inspector during an inspection for the purpose of aiding in the inspection. Employee(s) accompanying an inspector are entitled to normal wages for the time spent during the inspection. The plan also provides for right of entry for inspection and prohibition of advance notice of inspection. The Commissioner of Labor is responsible for all enforcement actions including the issuance of citations/Orders to Comply which must also specify the abatement period, posting requirements and the employer's and employee's right to contest any or all orders. Although the plan does not provide for initial (first instance) monetary sanctions, the Commissioner of Labor has the authority to impose civil administrative penalties of up to $7,000 per day for each violation, for failure to abate, if the time for compliance with an order has elapsed, and the employer has not contested and has not made a good faith effort to comply. Willful or repeated violations also are subject to civil administrative penalties of up to $70,000 for each violation. Penalties may be recovered with costs in a civil action brought under the New Jersey Penalty Enforcement Act (N.J.S.2A.:58–1 *et seq.*)

(f) *Review procedures.* Under the plan, employers, employees and other affected parties may seek informal review with the Department of Labor relative to a notice of violation/Order to Comply, the reasonableness of the abatement period, any penalty and/or may seek formal administrative review with the Occupational Safety and Health Review Commission, a board appointed by the Governor and authorized under section 34:6A.42 of the New Jersey Act to hear and rule on appeals of orders to comply and any penalties proposed. Any employer, employee or employee representative affected by a determination of the Commissioner may file a contest within fifteen (15) working days of the issuance of an order to comply. The Review Commission will issue an order, based on a finding of fact, affirming, modifying, or vacating the commissioner's order to comply or the proposed penalty, or directing other appropriate relief, and the order shall become final 45 days after its issuance. Judicial review of the decision of the Review Commission may be sought at the Appellate Division of the Superior Court.

(g) *Staffing and Resources.* The plan further provides assurances of a fully trained, adequate staff, including 20 safety and 7 health compliance officers for enforcement inspections, and 4 safety and 3 health consultants to perform consultation services in the public sector, and 2 safety and 3 health training and education staff. The State has assured that it will continue to provide a sufficient number of adequately trained and qualified personnel necessary for the enforcement of standards as required by 29 CFR 1956.10. The State has also given satisfactory assurance of adequate funding to support the plan.

(h) *Records and reports.* The plan provides that public employers in New Jersey will maintain appropriate records and make timely reports on occupational injuries and illnesses in a manner substantially identical to that required for private sector employers under Federal OSHA. New Jersey has assured that it will continue its participation in the Bureau of Labor Statistics Annual Survey of Injuries and Illnesses with regard to both private and public sector employers. The State will comply with the provisions of 29 CFR 1904.7 which allows full employee and employee representative access, including employee's names, to the log of workplace injuries and illnesses; and will amend its regulations accordingly. The plan also contains assurances that

the Commissioner of Labor will provide reports to OSHA in such form as the Assistant Secretary may require, and that New Jersey will participate in OSHA's Integrated Management Information System.

(i) *Voluntary compliance programs.* The plan provides that training will be provided to public employers and employees; seminars will be conducted to familiarize affected individuals with OSHA standards, requirements and safe work practices; an on-site consultation program in the public sector will be established to provide services to public employers who so desire; and, all State agencies and political subdivisions will be encouraged to develop and maintain self inspection programs as well as internal safety and health programs as an adjunct to but not a substitute for the Commissioner of Labor's enforcement.

§ 1956.61 Developmental Schedule.

The New Jersey State plan is developmental. The following is a schedule of major developmental steps as provided in the plan:

(a) Adopt standards identical to or at least as effective as all existing OSHA standards within one year after plan approval.

(b) Adopt amendments to regulations regarding inspections, citations, and proposed penalties equivalent to 29 CFR part 1903 within one year after plan approval.

(c) Develop a five year strategic plan within two years after plan approval.

(d) Develop field inspection reference manual and/or field operations manual within two years after plan approval.

(e) Fully implement public employer/employee consultation, training and education program equivalent to 29 CFR part 1908 within three years after plan approval.

(f) Adopt amendments to regulations regarding discrimination against employees equivalent to 29 CFR part 1977 within two years after plan approval.

(g) Adopt amendments to regulations regarding variances equivalent to 29 CFR part 1905 within two years after plan approval.

(h) Adopt amendments to regulations regarding record keeping equivalent to 29 CFR part 1904 within two years after plan approval.

§ 1956.62 Completion of developmental steps and certification. [Reserved]

§ 1956.63 Determination of operational effectiveness. [Reserved]

§ 1956.64 Location of plan for inspection and copying.

A copy of the plan may be inspected and copied during normal business hours at the following locations: Office of State Programs, U.S. Department of Labor, Occupational Safety and Health Administration, 200 Constitution Avenue, NW., Room N–3700, Washington, DC 20210; Office of the Regional Administrator, U.S. Department of Labor, Occupational Safety and Health Administration, 1201 Varick Street, Room 670, New York, New York 10014; and New Jersey Department of Labor, Division of Public Safety and Occupational Safety and Health, Office of Public Employees' Safety, P.O. Box 386, 225 East State Street, 8th Floor West, Trenton, New Jersey 08625–0386.

Subpart H—The Virgin Islands

SOURCE: 68 FR 43460, July 23, 2003, unless otherwise noted.

§ 1956.70 Description of plan as approved.

(a) The Virgin Islands State plan was converted to a public employee only occupational safety and health program on July 1, 2003, and received initial approval on July 23, 2003. It is administered and enforced by the Virgin Islands Department of Labor, Division of Occupational Safety and Health (''the agency,'' or ''VIDOSH'') throughout the U.S. Virgin Islands (the ''Virgin Islands''). The Virgin Islands public employee program, established by Executive Order 200–76 on July 11, 1975, extends full authority under Virgin Islands Act No. 3421, Section 16 (April 27, 1973) and implementing regulations to the agency to enforce and administer all laws and rules protecting the safety and health of employees of the Government of the Virgin Islands, its departments, agencies and instrumentalities, including any political subdivisions. It

covers all activities of public employers and employees and places of public employment. The Territory has adopted all Federal standards promulgated as of June 2003, and has given assurances that it will continue to adopt and update all Federal standards, revisions and amendments. The plan is accompanied by a statement of the Governor's support.

(b) The plan establishes procedures for variances and the protection of employees from hazards under a variance; insures inspection in response to complaints; provides employer and employee representatives an opportunity to accompany inspectors and to call attention to possible violations before, during, and after inspections; notification to employees or their representatives when no compliance action is taken as a result of alleged violations, including informal review; notification of employees of their protection; protection of employees against discharge or discrimination in terms and conditions of employment; includes provision for prompt notices to employers and employees of violations of standards and abatement requirements and either sanctions or alternative mechanisms to assure abatement; employer's right to appeal citations for violations, abatement periods and any proposed sanctions and/or compulsory process; employee's right to appeal abatement periods; and employee participation in review proceedings. Also included are provisions for right of entry for inspection, prohibition of advance notice of inspection and the requirement for both employers and employees to comply with the applicable rules, standards, and orders, and employer obligations to maintain records and provide reports as required. Further, the plan provides assurances of a fully trained adequate staff and sufficient funding, and for voluntary compliance programs, including a public sector consultation program.

NOTE: The Virgin Islands' received initial approval for a comprehensive State plan covering the private (safety only) and public sectors on September 11, 1973 (38 FR 24896) and final approval under Section 18(e) of the Act on April 17, 1984 (49 FR 16766). Final approval status for that State plan was suspended and full Federal concurrent enforcement authority was reinstated on November 13, 1995 (60 FR 56950). Effective July 1, 2003, the Virgin Islands withdrew the portion of its State plan which covered private sector employment, and exclusive Federal enforcement jurisdiction for the private sector resumed.

§ 1956.71 Developmental schedule.

The Virgin Islands State plan for public employees only is developmental. The following is a schedule of major developmental steps to be completed:

(a) The Virgin Islands will review and amend its legislation and regulations, as appropriate, to assure proper statutory authority for ''at least as effective'' coverage of all public sector employers and employees including Territorial government employers and employees and any employers or employees of municipalities or other local governmental entities. The plan will be revised to include a legal opinion that the converted plan meets the requirements of the Occupational Safety and Health Act of 1970 and is consistent with the laws of the Virgin Islands. These actions will occur within one year of plan conversion approval.

(b) The Virgin Islands will review and amend its legislation and regulations as necessary to reflect its more limited coverage and to be consistent with formal withdrawal of Federal approval of the private sector portion of the State plan, within one year of plan conversion approval.

(c) The Virgin Islands will review its statutory authority regarding standards adoption and take appropriate legislative or administrative action to assure that it is consistent with 29 CFR part 1953 and that all standards applicable to the public sector will be promulgated within six months of the promulgation date of new Federal OSHA standards, within one year of plan conversion approval.

(d) The Virgin Islands will take appropriate legislative or administrative action to assure effective sanctions, either as monetary penalties, or an alternative mechanism for compelling abatement in the public sector within one year of plan conversion approval.

(e) The Virgin Islands will develop a five-year strategic plan and corresponding annual performance plan

within two years of plan conversion approval.

(f) A new State poster will be developed and distributed to reflect coverage of the public sector only within one year of plan conversion approval.

(g) The Virgin Islands will submit a revised State plan, in electronic format to the extent possible, reflecting its coverage of public employers and employees only in accordance with 29 CFR 1956, within one year of plan conversion approval.

(h) The Virgin Islands will hire and provide appropriate training for their public sector compliance and consultation staffs, within one year of plan conversion approval.

(i) The Virgin Islands will develop a public sector consultation program within two years of plan conversion approval.

§ 1956.72 Changes to approved plan. [Reserved]

§ 1956.73 Determination of operational effectiveness. [Reserved]

§ 1956.74 Location of basic State plan documentation.

Copies of basic State plan documentation are maintained at the following locations. Specific documents are available upon request, and will be provided in electronic format, to the extent possible. Contact the: Directorate of Cooperative and State Programs, Office of State Programs, U.S. Department of Labor, Occupational Safety and Health Administration, 200 Constitution Avenue, NW., Room N–3700, Washington, DC 20210; Office of the Regional Administrator, U.S. Department of Labor, Occupational Safety and Health Administration, 201 Varick Street, Room 670, New York, New York 10014; and the Virgin Islands Department of Labor, Division of Occupational Safety and Health, 3021 Golden Rock, Christiansted, St. Croix, Virgin Islands, 00840. Current contact information for these offices (including telephone numbers, mailing and e-mail addresses) is available on OSHA's Web site, *http://www.osha.gov*.

Subpart I—Illinois

SOURCE: 74 FR 45114, Sept. 1, 2009, unless otherwise noted.

§ 1956.80 Description of the plan as initially approved.

(a) *Authority and scope*. The Illinois State Plan for Public Employee Occupational Safety and Health received initial OSHA approval on September 1, 2009. The Plan designates the Illinois Department of Labor as the State agency responsible for administering the Plan throughout the State. The Plan includes as enabling legislation the Illinois Safety Inspection and Education Act (SIEA) [820 ILCS 220] and the Illinois Health and Safety Act (HSA) [820 ILCS 225]. Under the legislation, the State Director of Labor has full authority to adopt, enforce and administer all laws and rules protecting the safety and health of all employees of the State and its political subdivisions under the Illinois Public Employee Only State Plan.

(b) *Standards*. Illinois has adopted State standards identical to OSHA occupational safety and health standards promulgated through September 30, 2005. The State Plan provides that these standards will be updated within one year of plan approval and future OSHA standards and revisions will be adopted by the State within six months of Federal promulgation, in accordance with 29 CFR 1953.5. Any emergency temporary standards will be adopted within 30 days of Federal adoption. The State will adopt Federal OSHA standards in accordance with the provisions of the Illinois Health and Safety Act [820 ILCS 225/4.1]. The Plan also provides for the adoption of alternative or different occupational safety and health standards by the Director of Labor, where no Federal standards are applicable to the conditions or circumstances or where standards more stringent than Federal are deemed appropriate.

(c) *Variances*. The Plan includes provisions for the granting of permanent and temporary variances from State standards in terms substantially similar to the variance provisions contained in the OSH Act. The State provisions require employee notification

of variance applications as well as employee rights to participate in hearings held on variance applications. Variances may not be granted unless it is established that adequate protection is afforded employees under the terms of the variance. The State has committed to amend its current variance procedures at 56 ILAC 350.40 to bring them into conformance with Federal procedures at 29 CFR 1905 within two years of plan approval.

(d) *Employee notice and discrimination protection.* The Plan provides for notification to employees of their protections and obligations under the Plan by such means as the State poster and required posting of notices of violations. The Plan also provides for protection of employees against discharge or discrimination resulting from exercise of their rights under the State's Acts in terms similar to section 11(c) of the OSH Act. The SIEA provides that an employee who believes that he or she has been discharged or otherwise discriminated against by any person in violation of this section may, within 30 calendar days after the violation occurs, file a complaint with the Director of Labor alleging the discrimination. The Plan provides that the Director shall investigate such complaints as appropriate and make a determination within 90 days. If the Director determines that the provisions of this section have been violated, the Director shall bring an action in the circuit court for appropriate relief.

(e) *Inspections and enforcement.* The Plan provides for inspection of covered workplaces, including inspections in response to employee complaints by the Department of Labor. If a determination is made that an employee complaint does not warrant an inspection, the complainant shall be notified, in writing, of such determination and afforded an opportunity to seek informal review of the determination. The Plan provides the opportunity for employer and employee representatives to accompany the inspector during an inspection for the purpose of aiding in the inspection and in the absence of such a representative, the right to interview a reasonable number of employees during the inspection. The Plan also provides for the right of entry for inspection and prohibition of advance notice of inspection. The Director of Labor is responsible for all enforcement actions, including the issuance of all citations which must specify the abatement period, posting requirements, and the employer's and employees' right to contest any or all citations. Although the Plan contains authority for a system of first-instance monetary penalties, in practice it is the State's intent to issue monetary penalties only for failure to correct and egregious violations. The State has discretionary authority for civil penalties of not more than $10,000 for repeat and willful violations. Serious and other-than-serious violations may be assessed a penalty of up to $1,000 per violation and failure-to-correct violations may be assessed a penalty of up to $1,000 per violation per day. In addition, any public employer who willfully violates any standard, rule, or order can be charged by the Attorney General with a Class 4 felony if that violation causes death to any employee.

(f) *Review procedures.* Although the Director has statutory responsibility for both the enforcement and the appeals process (820 ILCS 220/2.4), in practice, Administrative Law Judges (ALJ) hear contested cases without any oversight or review by the Director. The State will make appropriate changes to its regulations and procedures to ensure the separation of these functions and the independence of the adjudicatory process within one year of plan approval. The Director of Labor will remain responsible for the enforcement process, including the issuance of citations and penalties, and their defense, if contested. Public employers or their representatives who receive a citation or a proposed penalty may within 15 working days contest the citation, proposed penalty and/or abatement period and request a hearing before an Administrative Law Judge. Any public employee or representative may within 15 working days request a hearing before an ALJ regarding the reasonableness of the abatement period. Informal review prior to contest may also be requested at the division level. The ALJ's decision is subject to appeal to the courts.

(g) *Staffing and resources.* The Plan further provides assurances of a fully

trained, adequate staff within three years of plan approval, including 11 safety and 3 health compliance officers for enforcement inspections, and 3 safety and 2 health consultants to perform consultation services in the public sector. The State has assured that it will continue to provide a sufficient number of adequately trained and qualified personnel necessary for the enforcement of standards as required by 29 CFR 1956.10. The State has also given satisfactory assurance of adequate funding to support the Plan.

(h) *Records and reports.* The Plan provides that public employers in Illinois will maintain appropriate records and make timely reports on occupational injuries and illnesses in a manner substantially identical to that required for private sector employers under Federal OSHA. Illinois has assured that it will coordinate with the Illinois Department of Health to expand its participation in the Bureau of Labor Statistics Annual Survey of Injuries and Illnesses to include public sector employers. The State will comply with the provisions of 29 CFR 1904.7, which allow full employee and employee representative access, including employee's names, to the log of workplace injuries and illnesses; and will amend its recordkeeping regulations within two years of plan approval. The Plan also contains assurances that the Director of Labor will provide reports to OSHA in such form as the Assistant Secretary may require, and that Illinois will participate in OSHA's Integrated Management Information System as well as it successor, OSHA Information System, once deployed.

(i) *Voluntary compliance programs.* The Plan provides that training will be provided to public employers and employees; a separate on-site consultation program in the public sector will be established to provide services to public employers who request assistance; and all State agencies and political subdivisions will be encouraged to develop and maintain internal safety and health programs as an adjunct to, but not a substitute for, the Director of Labor's enforcement.

§ 1956.81 Developmental schedule.

The Illinois State Plan is developmental. The following is a schedule of major developmental steps as provided in the Plan that will be accomplished within three years of plan approval:

(a) Illinois will adopt standards identical to or at least as effective as the applicable existing OSHA standards and revise the Rules of Procedures in Administrative Hearings (56 ILAC 120), clarifying the separation of the enforcement role of the Director of Labor from the adjudicatory role in contested cases, within one year after plan approval.

(b) Illinois will update and adopt amendments to the Illinois Administrative Rules (56 ILAC 350) regarding identical standards, variances, inspections, review system for contested cases and employee access to information equivalent to 29 CFR parts 1903, 1905, 1911 and 2200 within two years after plan approval.

(c) Illinois will adopt amendments to rules regarding recordkeeping substantially identical to 29 CFR part 1904 within two years after plan approval.

(d) An annual performance plan will be developed and submitted with the FY 2010 Grant Application. The performance plan will focus on achievement of developmental steps and activity reporting until such time as the program is fully operational, at which point objective, results-oriented performance goals will be established.

(e) Illinois will develop an inspection scheduling system that targets high hazard establishments within two years of plan approval.

(f) Illinois will develop a comprehensive field operations manual that is at least as effective as the Federal Field Operations Manual within two years after plan approval.

(g) Illinois will begin hiring critical program management staff and filling current vacancy positions within 30 days of plan approval.

(h) Illinois will hire the additional Enforcement program field and support staff within two years of plan approval.

(i) Illinois will fully implement and staff a public employer/employee Consultation program equivalent to 29

CFR part 1908, and training and education programs separate from Enforcement, within three years after plan approval.

(j) Illinois will have an authorized compliance staff of 11 Safety Inspectors and 3 Industrial Hygienists (nonsupervisory) and a public sector consultation staff of 3 Safety Consultants and 2 Industrial Hygiene Consultants within three years of plan approval.

(k) Illinois and OSHA will develop a plan for joining the OSHA Integrated Management Information System to report State plan activity, including specific information on inspections, consultation visits, etc., in conjunction with OSHA, within six months of plan approval. Illinois will convert to the new OSHA Information System upon its deployment. In the interim, Illinois will provide monthly reports on its activity in an agreed upon format.

(l) Illinois will coordinate with the Illinois Department of Public Health and the Bureau of Labor Statistics to expand the current Illinois survey to provide more detailed injury/illness/fatality rates on State and local government, within two years of plan approval.

(m) Illinois will revise and submit a State poster for posting at all public sector workplaces in the State within one year of plan approval.

§§ 1956.82–1956.83 [Reserved]

§ 1956.84 Location of plan for inspection and copying.

A copy of the plan may be inspected and copied during normal business hours at the following locations: Office of State Programs, U.S. Department of Labor, Occupational Safety and Health Administration, 200 Constitution Avenue, NW., Room N–3700, Washington, DC 20210; OSHA's Regional Office in Chicago, Illinois, at 230 South Dearborn Street, 32nd Floor, Room 3244, Chicago, IL 60604; and at: the Offices of the Illinois Department of Labor, Safety Inspection and Education Division at 1 West Old State Capitol Plaza, 3rd floor, Springfield, IL 62701; 160 North LaSalle Street, Suite C–1300, Chicago, IL 60601; or 2309 West Main Street, Suite 115, Marion, IL 62959.

PART 1960—BASIC PROGRAM ELEMENTS FOR FEDERAL EMPLOYEE OCCUPATIONAL SAFETY AND HEALTH PROGRAMS AND RELATED MATTERS

Subpart A—General

Sec.
1960.1 Purpose and scope.
1960.2 Definitions.

Subpart B—Administration

1960.6 Designation of agency safety and health officials.
1960.7 Financial management.
1960.8 Agency responsibilities.
1960.9 Supervisory responsibilities.
1960.10 Employee responsibilities and rights.
1960.11 Evaluation of occupational safety and health performance.
1960.12 Dissemination of occupational safety and health program information.

Subpart C—Standards

1960.16 Compliance with OSHA standards.
1960.17 Alternate standards.
1960.18 Supplementary standards.
1960.19 Other Federal agency standards affecting occupational safety and health.

Subpart D—Inspection and Abatement

1960.25 Qualifications of safety and health inspectors and agency inspections.
1960.26 Conduct of inspections.
1960.27 Representatives of officials in charge and representatives of employees.
1960.28 Employee reports of unsafe or unhealthful working conditions.
1960.29 Accident investigation.
1960.30 Abatement of unsafe or unhealthful working conditions.
1960.31 Inspections by OSHA.

Subpart E—General Services Administration and Other Federal Agencies

1960.34 General provisions.
1960.35 National Institute for Occupational Safety and Health.

Subpart F—Occupational Safety and Health Committees

1960.36 General provisions.
1960.37 Committee organization.
1960.38 Committee formation.
1960.39 Agency responsibilities.
1960.40 Establishment committee duties.
1960.41 National committee duties.

Subpart G—Allegations of Reprisal

1960.46 Agency responsibility.
1960.47 Results of investigations.

Subpart H—Training

1960.54 Training of top management officials.
1960.55 Training of supervisors.
1960.56 Training of safety and health specialists.
1960.57 Training of safety and health inspectors.
1960.58 Training of collateral duty safety and health personnel and committee members.
1960.59 Training of employees and employee representatives.
1960.60 Training assistance.

Subpart I—Recordkeeping and Reporting Requirements

1960.66 Purpose, scope, and general provisions.
1960.67 Federal agency certification of the injury and illness annual summary (OSHA 300–A or equivalent).
1960.68 Prohibition against discrimination.
1960.69 Retention and updating of old forms.
1960.70 Reporting of serious accidents.
1960.71 Agency annual reports.
1960.72 Reporting Federal Agency Injury and Illness Information.
1960.73 Federal agency injury and illness recordkeeping forms.
1960.74 [Reserved]

Subpart J—Evaulation of Federal Occupational Safety and Health Programs

1960.78 Purpose and scope.
1960.79 Self-evaluations of occupational safety and health programs.
1960.80 Secretary's evaluations of agency occupational safety and health programs.

Subpart K—Field Federal Safety and Health Councils

1960.84 Purpose.
1960.85 Role of the Secretary.
1960.86 Establishing councils.
1960.87 Objectives.
1960.88 Membership and participation.
1960.89 Organization.
1960.90 Operating procedures.

AUTHORITY: Sections 19 and 24 of the Occupational Safety and Health Act of 1970 (84 Stat. 1609, 1614; 29 U.S.C. 668, 673), 5 U.S.C. 553, Secretary of Labor's Order No. 1–90 (55 FR 9033), and Executive Order 12196.

SOURCE: 45 FR 69798, Oct. 21, 1980, unless otherwise noted.

Subpart A—General

§ 1960.1 Purpose and scope.

(a) Section 19 of the Occupational Safety and Health Act (the Act) contains special provisions to assure safe and healthful working conditions for Federal employees. Under that section, it is the responsibility of the head of each Federal agency to establish and maintain an effective and comprehensive occupational safety and health program which is consistent with the standards promulgated under section 6 of the Act. The Secretary of Labor (the Secretary), under section 19, is to report to the President certain evaluations and recommendations with respect to the programs of the various agencies, and the duties which section 24 of the Act imposes on the Secretary of Labor necessarily extend to the collection, compilation and analysis of occupational safety and health statistics from the Federal Government. The role of the General Services Administration in this area stems from its duties as the Government's principal landlord and from its specific safety and health responsibilities under 41 CFR part 101, subchapter D, Federal Property Management Regulations.

(b) Executive Order 12196, Occupational Safety and Health Programs for Federal Employees, issued February 26, 1980, prescribes additional responsibilities for the heads of agencies, the Secretary, and the General Services Administrator. Among other duties, the Secretary is required to issue basic program elements in accordance with which the heads of agencies shall operate their safety and health programs. The purpose of this part is to issue these basic program elements. Although agency heads are required to operate a program in accordance with the basic program elements, those elements contain numerous provisions which, by their terms, permit agency heads the flexibility necessary to implement their programs in a manner consistent with their respective missions, sizes, and organizations. Moreover, an agency head, after consultation with agency employees or their representatives and with appropriate

safety and health committees may request the Secretary to consider approval of alternate program elements; the Secretary, after consultation with the Federal Advisory Council on Occupational Safety and Health, may approve such alternate program elements.

(c) Under Executive Order 12196, the Secretary is required to perform various services for the agencies, including consultation, training, recordkeeping, inspections, and evaluations. Agencies are encouraged to seek such assistance from the Secretary as well as advice on how to comply with the basic program elements and operate effective occupational safety and health programs. Upon the request of an Agency, the Office of Federal Agency Safety and Health Programs will review proposed agency plans for the implementation of program elements.

(d) Section 19 of the Act and the Executive Order require specific opportunities for employee participation in the operation of agency safety and health programs. The manner of fulfilling these requirements is set forth in part in these program elements. These requirements are separate from but consistent with the Federal Service Labor Management Relations Statute (5 U.S.C. 71) and regulations dealing with labor-management relations within the Federal Government.

(e) Executive Order 12196 and these basic program elements apply to all agencies of the Executive Branch. They apply to all Federal employees. They apply to all working conditions of Federal employees except those involving uniquely military equipment, systems, and operations.

(f) No provision of the Executive Order or this part shall be construed in any manner to relieve any private employer, including Federal contractors, or their employees of any rights or responsibilities under the provisions of the Act, including compliance activities conducted by the Department of Labor or other appropriate authority.

(g) Federal employees who work in establishments of private employers are covered by their agencies' occupational safety and health programs. Although an agency may not have the authority to require abatement of hazardous conditions in a private sector workplace, the agency head must assure safe and healthful working conditions for his/her employees. This shall be accomplished by administrative controls, personal protective equipment, or withdrawal of Federal employees from the private sector facility to the extent necessary to assure that the employees are protected.

[45 FR 69798, Oct. 21, 1980, as amended at 60 FR 34852, July 5, 1995]

§ 1960.2 Definitions.

(a) The term *Act* means the Occupational Safety and Health Act of 1970 (84 Stat. 1590 *et seq.*, 29 U.S.C. 651 *et seq.*).

(b) The term *agency* for the purposes of this part means an Executive Department, as defined in 5 U.S.C. 101, or any employing unit of authority of the Executive Branch of the Government. For the purposes of this part to the extent it implements section 19 of the Act, the term *agency* does not include the United States Postal Service. By agreement between the Secretary of Labor and the head of an agency of the Legislative or Judicial Branches of the Government, these regulations may be applicable to such agencies.

(c) The term *agency liaison* means an agency person appointed with full authority and reponsibility to represent the occupant agency management with the official in charge of a facility or installation such as a GSA Building Manager.

(d) The term *building manager* means the person who manages one or several buildings under the authority of a Federal agency. For example, a building manager may be the GSA person who manages building(s) for GSA.

(e) As used in Executive Order 12196, the term *consultation with representatives of the employees thereof* shall include such consultation, conference, or negotiation with representatives of agency employees as is consistent with the Federal Service Labor Management Relations Statute (5 U.S.C. 71), or collective bargaining or other labor-management arrangements. As used in this part, the term *representative of employees* shall be interpreted with due regard for any obligation imposed by the aforementioned statute and any other

labor-management arrangement that may cover the employees involved.

(f) The term *Designated Agency Safety and Health Official* means the individual who is responsible for the management of the safety and health program within an agency, and is so designated or appointed by the head of the agency pursuant to § 1960.6 and the provisions of Executive Order 12196.

(g) The term *employee* as used in this part means any person, other than members of the Armed Forces, employed or otherwise suffered, permitted, or required to work by an *agency* as the latter term is defined in paragraph (b) of this section.

(h) The term *establishment* means a single physical location where business is conducted or where services or operations are performed. Where distinctly separate activities are performed at a single physical location, each activity shall be treated as a separate *establishment*. Typically, an *establishment* as used in this part refers to a field activity, regional office, area office, installation, or facility.

(i) The term *uniquely military equipment, systems, and operations* excludes from the scope of the order the design of Department of Defense equipment and systems that are unique to the national defense mission, such as military aircraft, ships, submarines, missiles, and missile sites, early warning systems, military space systems, artillery, tanks, and tactical vehicles; and excludes operations that are uniquely military such as field maneuvers, naval operations, military flight operations, associated research test and development activities, and actions required under emergency conditions. The term includes within the scope of the Order Department of Defense workplaces and operations comparable to those of industry in the private sector such as: Vessel, aircraft, and vehicle repair, overhaul, and modification (except for equipment trials); construction; supply services; civil engineering or public works; medical services; and office work.

(j) The term *incidence rates* means the number of injuries and illnesses, or lost workdays, per 100 full-time workers. Rates are calculated as

$$N \times 200{,}000 \div EH$$

N = number of injuries and illnesses, or number of lost workdays.
EH = total hours worked by all employees during a month, a quarter, or fiscal year.
200,000 = base for 100 full-time equivalent workers (working 40 hours per week, 50 weeks per year).

(k) The term *inspection* means a comprehensive survey of all or part of a workplace in order to detect safety and health hazards. Inspections are normally performed during the regular work hours of the agency, except as special circumstances may require. Inspections do not include routine, day-to-day visits by agency occupational safety and health personnel, or routine workplace surveillance of occupational health conditions.

(l) *Injury or illness*. An injury or illness is an abnormal condition or disorder. Injuries include cases such as, but not limited to, a cut, fracture, sprain, or amputation. Illness includes both acute and chronic illnesses, such as, but not limited to, a skin disease, respiratory disorder, or poisoning.

(m) The term *representative of management* means a supervisor or management official as defined in the applicable labor-management relations program covering the affected employees.

(n)–(p) [Reserved]

(q) The term *Safety and Health Inspector* means a safety and/or occupational health specialist or other person authorized pursuant to Executive Order 12196, section 1–201(g), to carry out inspections for the purpose of subpart D of this part, a person having equipment and competence to recognize safety and/or health hazards in the workplace.

(r) The term *Safety and Health Official* means an individual who manages the occupational safety and/or occupational health program at organizational levels below the Designated Agency Safety and Health Official.

(s) The term *Safety and Health Specialist* means a person or persons meeting the Office of Personnel Management standards for such occupations, which include but are not limited to:

Safety and Occupational Health Manager/Specialist GS–018
Safety Engineer GS–803
Fire Prevention Engineer GS–804
Industrial Hygienist GS–690
Fire Protection and Prevention Specialist/Marshal GS–081

Health Physicist GS–1306
Occupational Medicine Physician GS–602
Occupational Health Nurse GS–610
Safety Technician GS–019
Physical Science Technician GS–1311
Environmental Health Technician GS–699
Air Safety Investigation Officer GS–1815
Aviation Safety Specialist GS–1825
Chemist GS–1320
Health Technician GS–645
Highway Safety Manager GS–2125

or equally qualified military, agency, or nongovernment personnel. The agency head shall be responsible for determination and certification of equally qualified personnel.

(t) The term *workplace* means a physical location where the agency's work or operations are performed.

(u) The term *imminent danger* means any conditions or practices in any workplace which are such that a danger exists which could reasonably be expected to cause death or serious physical harm immediately or before the imminence of such danger can be eliminated through normal procedures.

(v) The word *serious* as used in *serious hazard*, *serious violation* or *serious condition* means a hazard, violation or condition such that there is a substantial probability that death or serious physical harm could result.

(w) The term *certified safety and health committee* means an agency safety and health committee that meets the provisions of section 1–3 of Executive Order 12196 and of this part, as listed and attested to by the head of each agency in writing to the Secretary.

(x) The term *reprisal* as used in this part means any act of restraint, interference, coercion or discrimination against an employee for exercising his or her rights under Executive Order 12196 and this part, or for participating in the agency's safety and health program.

[45 FR 69798, Oct. 21, 1980, as amended at 49 FR 3078, Jan. 25, 1984; 50 FR 40269, Oct. 2, 1985; 51 FR 28378, Aug. 7, 1986; 69 FR 68804, Nov. 26, 2004; 78 FR 47190, Aug. 5, 2013]

Subpart B—Administration

§ 1960.6 Designation of agency safety and health officials.

(a) The head of each agency shall designate an official with sufficient authority and responsibility to represent effectively the interest and support of the agency head in the management and administration of the agency occupational safety and health program. This Designated Agency Safety and Health Official should be of the rank of Assistant Secretary, or of equivalent rank, or equivalent degree of responsibility, and shall have sufficient headquarters staff with the necessary training and experience. The headquarters staff should report directly to, or have appropriate access to, the Designated Agency Safety and Health Official, in order to carry out the responsibilities under this part.

(b) The Designated Agency Safety and Health Official shall assist the agency head in establishing:

(1) An agency occupational safety and health policy and program to carry out the provisions of section 19 of the Act, Executive Order 12196, and this part;

(2) An organization, including provision for the designation of safety and health officials at appropriate levels, with adequate budgets and staffs to implement the occupational safety and health program at all operational levels;

(3) A set of procedures that ensures effective implementation of the agency policy and program as required by section 19 of the Act, Executive Order 12196, and the program elements of this part, considering the mission, size, and organization of the agency;

(4) Goals and objectives for reducing and eliminating occupational accidents, injuries, and illnesses;

(5) Plans and procedures for evaluating the agency's occupational safety and health program effectiveness at all operational levels; and

(6) Priorities with respect to the factors which cause occupational accidents, injuries, and illnesses in the agency's workplaces so that appropriate corrective actions can be taken.

(c) The agency head shall assure that safety and health officials are designated at each appropriate level with sufficient authority and responsibility to plan for and assure funds for necessary safety and health staff, equipment, materials, and training required

to ensure implementation of an effective occupational safety and health program.

§ 1960.7 Financial management.

(a) The head of each agency shall ensure that the agency budget submission includes appropriate financial and other resources to effectively implement and administer the agency's occupational safety and health program.

(b) The Designated Agency Safety and Health Official, management officials in charge of each establishment, safety and health officials at all appropriate levels, and other management officials shall be responsible for planning, requesting resources, implementing, and evaluating the occupational safety and health program budget in accordance with all relevant Office of Management and Budget regulations and documents.

(c) Appropriate resources for an agency's occupational safety and health program shall include, but not be limited to:

(1) Sufficient personnel to implement and administer the program at all levels, including necessary administrative costs such as training, travel, and personal protective equipment;

(2) Abatement of unsafe or unhealthful working conditions related to agency operations or facilities;

(3) Safety and health sampling, testing, and diagnostic and analytical tools and equipment, including laboratory analyses;

(4) Any necessary contracts to identify, analyze, or evaluate unsafe or unhealthful working conditions and operations;

(5) Program promotional costs such as publications, posters, or films;

(6) Technical information, documents, books, standards, codes, periodicals, and publications; and

(7) Medical surveillance programs for employees.

[45 FR 69798, Oct. 21, 1980, as amended at 78 FR 47190, Aug. 5, 2013]

§ 1960.8 Agency responsibilities.

(a) The head of each agency shall furnish to each employee employment and a place of employment which are free from recognized hazards that are causing or are likely to cause death or serious physical harm.

(b) The head of each agency shall comply with the Occupational Safety and Health Administration standards applicable to the agency.

(c) The head of each agency shall develop, implement, and evaluate an occupational safety and health program in accordance with the requirements of section 19 of the Act, Executive Order 12196, and the basic program elements prescribed in this part, or approved alternate program elements.

(d) The head of each agency shall acquire, maintain, and require the use of approved personal protective equipment, approved safety equipment, and other devices necessary to protect employees.

(e) In order to provide essential specialized expertise, agency heads shall authorize safety and health personnel to utilize such expertise from whatever source available, including but not limited to other agencies, professional groups, consultants, universities, labor organizations, and safety and health committees.

§ 1960.9 Supervisory responsibilities.

Employees who exercise supervisory functions shall, to the extent of their authority, furnish employees employment and a place of employment which are free from recognized hazards that are causing or are likely to cause death or serious physical harm. They shall also comply with the occupational safety and health standards applicable to their agency and with all rules, regulations, and orders issued by the head of the agency with respect to the agency occupational safety and health program.

§ 1960.10 Employee responsibilities and rights.

(a) Each employee shall comply with the standards, rules, regulations, and orders issued by his/her agency in accordance with section 19 of the Act, Executive Order 12196, and this part which are applicable to his/her own actions and conduct.

(b) Employees shall use safety equipment, personal protective equipment,

and other devices and procedures provided or directed by the agency and necessary for their protection.

(c) Employees shall have the right to report unsafe and unhealthful working conditions to appropriate officials.

(d) Employees shall be authorized official time to participate in the activities provided for in section 19 of the Act, Executive Order 12196, this part, and the agency occupational safety and health program.

§ 1960.11 Evaluation of occupational safety and health performance.

Each agency head shall ensure that any performance evaluation of any management official in charge of an establishment, any supervisory employee, or other appropriate management official, measures that employee's performance in meeting requirements of the agency occupational safety and health program, consistent with the employee's assigned responsibilities and authority, and taking into consideration any applicable regulations of the Office of Personnel Management or other appropriate authority. The recognition of superior performance in discharging safety and health responsibilities by an individual or group should be encouraged and noted.

§ 1960.12 Dissemination of occupational safety and health program information.

(a) Copies of the Act, Executive Order 12196, program elements published in this part, details of the agency's occupational safety and health program, and applicable safety and health standards shall be made available upon request to employees or employee representatives for review.

(b) A copy of the agency's written occupational safety and health program applicable to the establishment shall be made available to each supervisor, each occupational safety and health committee member, and to employee representatives.

(c) Each agency shall post conspicuously in each establishment, and keep posted, a poster informing employees of the provisions of the Act, Executive Order 12196, and the agency occupational safety and health program under this part. The Department of Labor will furnish the core text of a poster to agencies. Each agency shall add the following items:

(1) Details of the agency's procedures for responding to reports by employees of unsafe or unhealthful working conditions, and to allegations of discrimination or reprisal due to participation in safety and/or health activities;

(2) The location where employees may obtain information about the agency's occupational safety and health program, including the full text of agency occupational safety and health standards, and

(3) Relevant information about any agency safety and health committees.

Such posters and additions shall not be altered, defaced, or covered by other material.

(d) A copy of the agency's poster shall be provided to the Secretary. If the agency needs assistance and advice on the content and development of the poster, such shall be requested of the Secretary prior to printing and distribution.

(e) Agency heads shall promote employee awareness of occupational safety and health matters through their ordinary information channels, such as newsletters, bulletins and handbooks.

Subpart C—Standards

§ 1960.16 Compliance with OSHA standards.

Each agency head shall comply with all occupational safety and health standards issued under section 6 of the Act, or with alternate standards issued pursuant to this subpart. In complying with section 6 standards, an agency may, upon prior notification to the Secretary, prescribe and enforce more stringent permissible exposure levels or threshold limit values and may require more frequent monitoring of exposures without recourse to the approval procedures for alternate standards described in § 1960.17. In addition, after consultation with employees and safety and health committees and prior notification to the Secretary, an agency may utilize the latest edition of a reference standard if it is more stringent than the section 6 standard. After notification, the Secretary may require

the use of the approval procedures for alternate standards for any of the situations described in this paragraph.

§ 1960.17 Alternate standards.

An agency head may apply an alternate standard where deemed necessary, and shall, after consultation with employees or their representatives, including appropriate occupational safety and health committees, notify the Secretary and request approval of such alternate standards.

(a) Any request by the head of the agency for an alternate standard shall be transmitted to the Secretary.

(b) Any such request for an alternate standard shall not be approved by the Secretary unless it provides equivalent or greater protection for affected employees. Any such request shall include:

(1) A statement of why the agency cannot comply with the OSHA standard or wants to adopt an alternate standard;

(2) A description of the alternate standard;

(3) An explanation of how the alternate standard provides equivalent or greater protection for the affected employees;

(4) A description of interim protective measures afforded employees until a decision is rendered by the Secretary of Labor; and

(5) A summary of written comments, if any, from interested employees, employee representatives, and occupational safety and health committees.

§ 1960.18 Supplementary standards.

(a) In addition to complying with emergency temporary standards issued under section 6 of the Act, an agency head shall adopt such emergency temporary and permanent supplementary standards as necessary and appropriate for application to working conditions of agency employees for which there exists no appropriate OSHA standards. In order to avoid any possible duplication of effort, the agency head should notify the Secretary of the subject matter of such standard when the development of the standard begins.

(b) The agency head shall send a copy of the final draft of the permanent supplementary standard to the Secretary prior to official adoption by the agency, along with any written comments on the standard from interested employees, employee representatives, and occupational safety and health committees. If the Secretary finds the permanent supplementary standard to be adopted inconsistent with OSHA standards, or inconsistent with OSHA enforcement practices under section 5(a)(1) of the Act, the Secretary shall have 15 working days in which to notify the head of the agency of this finding. In such a case, the supplementary standard shall not be adopted, but the agency will be afforded an opportunity to resubmit a revised standard that is designed to provide adequate protection and is consistent with OSHA standards. Upon request of the agency head, the Secretary shall offer to the agency technical assistance in the development of the supplemental standard.

§ 1960.19 Other Federal agency standards affecting occupational safety and health.

(a) Where employees of different agencies engage in joint operations, and/or primarily report to work or carry out operations in the same establishment, the standards adopted under § 1960.17 or § 1960.18 of the host agency shall govern.

(b) There are situations in which the head of an agency is required to comply with standards affecting occupational safety and health issued by a Federal agency other than OSHA. For example, standards issued by the Federal Aviation Administration, the Department of Energy, or the General Services Administration may be applicable to certain Federal workplaces. Nothing in this subpart affects the duty of any agency head to comply with such standards. In addition, agency heads should comply with other standards issued by Federal agencies which deal with hazardous working conditions, but for which OSHA has no standards.

(c) Although it is not anticipated that standards of other Federal agencies will conflict with OSHA standards, should such conflict occur, the head of the agency shall inform the other Federal agency and the Secretary so that

joint efforts to resolve the issues may be undertaken. However, until conflicts are resolved, agencies shall comply with the more protective of the conflicting standards.

Subpart D—Inspection and Abatement

§ 1960.25 Qualifications of safety and health inspectors and agency inspections.

(a) Executive Order 12196 requires that each agency utilize as inspectors ''personnel with equipment and competence to recognize hazards.'' Inspections shall be conducted by inspectors qualified to recognize and evaluate hazards of the working environment and to suggest general abatement procedures. Safety and health specialists as defined in § 1960.2(s), with experience and/or up-to-date training in occupational safety and health hazard recognition and evaluation are considered as meeting the qualifications of safety and health inspectors. For those working environments where there are less complex hazards, such safety and health specializations as cited above may not be required, but inspectors in such environments shall have sufficient documented training and/or experience in the safety and health hazards of the workplace involved to recognize and evaluate those particular hazards and to suggest general abatement procedures. All inspection personnel must be provided the equipment necessary to conduct a thorough inspection of the workplace involved.

(b) Each agency which has workplaces containing information classified in the interest of national security shall provide access to safety and health inspectors who have obtained the appropriate security clearance.

(c) All areas and operations of each workplace, including office operations, shall be inspected at least annually. More frequent inspections shall be conducted in all workplaces where there is an increased risk of accident, injury, or illness due to the nature of the work performed. Sufficient unannounced inspections and unannounced follow-up inspections should be conducted by the agency to ensure the identification and abatement of hazardous conditions.

(d) When situations arise involving multiple agencies' responsibilities for conditions affecting employee safety and health, coordination of inspection functions is encouraged.

§ 1960.26 Conduct of inspections.

(a) *Preparation.* (1) Prior to commencement of the inspection, the Safety and Health Inspector shall be provided all available relevant information which pertains to the occupational safety and health of the workplace to be inspected, including safety and health hazard reports, injury and illness records, previous inspection reports, and reports of unsafe and unhealthful working conditions.

(2) The Safety and Health Inspector shall determine in advance, where possible, the actual work procedures and conditions to be inspected, in order to have the proper equipment available to conduct an effective inspection.

(b) *Inspection.* (1) For the purpose of assuring safe and healthful working conditions for employees of agencies, the head of the agency shall authorize safety and/or health inspectors: To enter without delay, and at reasonable times, any building, installation, facility, construction site, or other area, workplace, or environment where work is performed by employees of the agency; to inspect and investigate during regular working hours and at other reasonable times, and within reasonable limits and in a reasonable manner, any such place of employment and all pertinent conditions, structures, machines, apparatus, devices, equipment, and materials therein, and to question privately any agency employee, and/or any agency supervisory employee, and/or any official in charge of an establishment.

(2) If there are no authorized representatives of employees, the inspector shall consult with a reasonable number of employees during the walkaround.

(3) When, in the opinion of the inspector, it is necessary to conduct personal monitoring (sampling) of employee's work environments, the inspector may request employees to wear reasonable and necessary personal monitoring devices, e.g., noise dosimeters and air

sampling pumps, for periods determined by the inspector to be necessary for complete and effective sampling of the environment.

(4) Upon request of the inspector, the employer shall encourage employees to wear the personal environmental monitoring devices during an inspection.

(5) Whenever and as soon as it is concluded on the basis of an inspection that a danger exists which could reasonably be expected to cause death or serious physical harm immediately, the inspector shall inform the affected employees and official in charge of the workplace of the danger. The official in charge of the workplace, or a person empowered to act for that official, shall undertake immediate abatement and the withdrawal of employees who are not necessary for abatement of the dangerous conditions. In the event the official in charge of the workplace needs assistance to undertake full abatement, that official shall promptly contact the Designated Agency Safety and Health Official and other responsible agency officials, who shall assist the abatement effort. Safety and health committees shall be informed of all relevant actions and representatives of the employees shall be so informed.

(6) At the conclusion of an inspection, the Safety and Health Inspector shall confer with the official in charge of the workplace or that official's representative, and with an appropriate representative of the employees of the establishment, and informally advise them of any apparent unsafe or unhealthful working conditions disclosed by the inspection. During any such conference, the official in charge of the workplace and the employee representative shall be afforded an opportunity to bring to the attention of the Safety and Health Inspector any pertinent information regarding conditions in the workplace.

(c) *Written reports and notices of unsafe or unhealthful working conditions.* (1) The inspector shall, in writing, describe with particularity the procedures followed in the inspection and the findings which form the basis for the issuance of any Notice of Unsafe or Unhealthful Working Conditions.

(2) Each agency shall establish a procedure for the prompt issuance of a Notice of Unsafe or Unhealthful Working Conditions. Such notices shall be issued not later than 15 days after completion of the inspection for safety violations or not later than 30 days for health violations. If there are compelling reasons why such notice cannot be issued within the 15 days or 30 days indicated, the persons described in paragraph (c)(2)(iii) of this section shall be informed of the reasons for the delay. Such procedure shall include the following:

(i) Notices shall be in writing and shall describe with particularity the nature and degree of seriousness of the unsafe or unhealthful working condition, including a reference to the standard or other requirement involved;

(ii) The notice shall fix a reasonable time for the abatement of the unsafe or unhealthful working condition; and

(iii) A copy of the notice shall be sent to the official in charge of the workplace, the employee representative who participated in the closing conference, and/or the safety and health committee of the workplace, if any.

(3) Upon receipt of any notice of an unsafe or unhealthful working condition, the official in charge of a workplace shall immediately post such notice, or copy thereof, unedited, except for reason of national security, at or near each place an unsafe or unhealthful working condition referred to in the notice exists or existed. In addition, a notice shall be posted if any special procedures are in effect. Where, because of the nature of the workplace operations, it is not practicable to post the notice at or near each such place, such notice shall be posted, unedited, except for reason of national security, in a prominent place where it will be readily observable by all affected employees. For example, where workplace activities are physically dispersed, the notice may be posted at the location to which employees report each day. Where employees do not primarily work at or report to a single location, the notice may be posted at the location from which the employees operate to carry out their activities.

(4) Each notice of an unsafe or unhealthful working condition, or a copy thereof, shall remain posted until the unsafe or unhealthful working condition has been abated or for 3 working days whichever is later. A copy of the notice will be filed and maintained for a period of five years after abatement at the establishment and made available to the Secretary upon request.

[45 FR 69798, Oct. 21, 1980; 45 FR 77003, Nov. 21, 1980]

§ 1960.27 Representatives of officials in charge and representatives of employees.

(a) Safety and health inspectors shall be in charge of inspections and may interview any employee in private if the inspector deems it necessary. A representative of the official in charge of a workplace and a representative of employees shall be given an opportunity to accompany Safety and Health Inspectors during the physical inspection of any workplace, both to aid the inspection and to provide such representatives with more detailed knowledge of any existing or potential unsafe or unhealthful working conditions. The representative of employees shall be selected by the employees. Additional representatives of the official in charge and additional representatives of employees may accompany the Safety and Health Inspectors if it is determined by the inspector that such additional representatives will further aid the inspection. Different representatives of the employer and employees may be allowed to accompany the Inspector during each different phase of an inspection.

(b) Safety and health inspectors shall be authorized to deny the right of accompaniment under this section to any person whose participation interferes with a fair and orderly inspection.

(c) With regard to facilities classified in the interest of national security, only persons authorized to have access to such facilities shall be allowed to accompany a Safety and Health Inspector in such areas.

(d) Safety and health inspectors shall consult with employees concerning matters of occupational safety and health to the extent deemed necessary for the conduct of an effective and thorough inspection. During the course of an inspection, any employee shall be afforded an opportunity to bring to the attention of the Safety and Health Inspector any unsafe or unhealthful working condition which the employee has reason to believe exists in the workplace.

§ 1960.28 Employee reports of unsafe or unhealthful working conditions.

(a) The purpose of employee reports is to inform agencies of the existence of, or potential for, unsafe or unhealthful working conditions. A report under this part is not a grievance.

(b) This section provides guidance in establishing a channel of communication between agency employees and those with responsibilities for safety and health matters, e.g., their supervisor, the agency safety and health officials, safety and health committees, safety and health inspectors, the head of the agency, or the Secretary. These channels of communication are intended to assure prompt analysis and response to reports of unsafe or unhealthful working conditions in accordance with the requirements of Executive Order 12196. Since many safety and health problems can be eliminated as soon as they are identified, the existence of a formal channel of communication shall not preclude immediate corrective action by an employee's supervisor in response to oral reports of unsafe or unhealthful working conditions where such action is possible. Nor should an employee be required to await the outcome of such an oral report before filing a written report pursuant to the provisions of this section.

(c) Any employee or representative of employees, who believes that an unsafe or unhealthful working condition exists in any workplace where such employee is employed, shall have the right and is encouraged to make a report of the unsafe or unhealthful working condition to an appropriate agency safety and health official and request an inspection of such workplace for this purpose. The report shall be reduced to writing either by the individual submitting the report or, in the case of an oral notification, by the above official or other person designated to receive the reports in the

workplace. Any such report shall set forth the grounds for the report and shall contain the name of the employee or representative of employees. Upon the request of the individual making such report, no person shall disclose the name of the individual making the report or the names of individual employees referred to in the report, to anyone other than authorized representatives of the Secretary. In the case of imminent danger situations, employees shall make reports by the most expeditious means available.

(d) *Reports received by the agency.* (1) Each report of an existing or potential unsafe or unhealthful working condition should be recorded on a log maintained at the establishment. If an agency finds it inappropriate to maintain a log of written reports at the establishment level, it may avail itself of procedures set forth in §1960.71. A copy of each report received shall be sent to the appropriate establishment safety and health committee.

(2) A sequentially numbered case file, coded for identification, should be assigned for purposes of maintaining an accurate record of the report and the response thereto. As a minimum, each establishment's log should contain the following information: date, time, code/reference/file number, location of condition, brief description of the condition, classification (imminent danger, serious or other), and date and nature of action taken.

(3) Executive Order 12196 requires that agency inspections be conducted within 24 hours for employee reports of imminent danger conditions, within three working days for potentially serious conditions, and within 20 working days for other than serious safety and health conditions. However, an inspection may not be necessary if, through normal management action and with prompt notification to employees and safety and health committees, the hazardous condition(s) identified can be abated immediately.

(4) An employee submitting a report of unsafe or unhealthful conditions shall be notified in writing within 15 days if the official receiving the report determines there are not reasonable grounds to believe such a hazard exists and does not plan to make an inspection based on such report. A copy of each such notification shall be provided by the agency to the appropriate certified safety and health committee, where established under Executive Order 12196. An agency's inspection or investigation report, if any, shall be made available to the employee making the report within 15 days after completion of the inspection, for safety violations or within 30 days for health violations, unless there are compelling reasons, and shall be made available to the Secretary or the Secretary's authorized representative on request.

(e) *Reports received by the Secretary of Labor.* (1) Agency safety and health programs must have provisions for responding to employees' reports of unsafe or unhealthful working conditions and the Secretary encourages employees to use agency procedures as the most expeditious means of achieving abatement of hazardous conditions. It is recognized, however, that employee reports may be received directly by the Secretary.

(2) When such reports are received directly from an employee or employee representative, the Secretary shall, where a certified safety and health committee exists, forward the report to the agency for handling in accordance with procedures outlined in §1960.28(d). A copy of the response to the originator shall be sent to the Secretary.

(3) Where there is no certified safety and health committee, or when requested by half the members of a committee, the Secretary may initiate an inspection or other appropriate action. When the Secretary determines that an inspection is warranted, the Secretary shall observe the same response times as required of the agencies under the Executive Order and §1960.28(d)(3). When the Secretary determines not to make an inspection, the report shall be forwarded to the agency for handling in accordance with procedures outlined in §1960.28(d). A copy of the response to the originator shall be sent to the Secretary.

§1960.29 Accident investigation.

(a) While all accidents should be investigated, including accidents involving property damage only, the extent

of such investigation shall be reflective of the seriousness of the accident.

(b) In any case, each accident which results in a fatality or the hospitalization of three or more employees shall be investigated to determine the causal factors involved. Except to the extent necessary to protect employees and the public, evidence at the scene of an accident shall be left untouched until inspectors have an opportunity to examine it.

(c) Any information or evidence uncovered during accident investigations which would be of benefit in developing a new OSHA standard or in modifying or revoking an existing standard should be promptly transmitted to the Secretary.

(d) The investigative report of the accident shall include appropriate documentation on date, time, location, description of operations, description of accident, photographs, interviews of employees and witnesses, measurements, and other pertinent information. A copy of the investigative report required by this section shall be forwarded to the official in charge of the workplace, the appropriate safety and health committee, and the exclusive employee representative, if any. The investigative report shall be made available to the Secretary or his authorized representative on request.

[45 FR 69798, Oct. 21, 1980, as amended at 69 FR 68804, Nov. 26, 2004]

§ 1960.30 Abatement of unsafe or unhealthful working conditions.

(a) The agency shall ensure the prompt abatement of unsafe and unhealthful conditions. Where a Notice of an Unsafe or Unhealthful Working Condition has been issued, abatement shall be within the time set forth in the notice, or in accordance with the established abatement plan.

(b) The procedures for correcting unsafe or unhealthful working conditions shall include a follow-up, to the extent necessary, to determine whether the correction was made. If, upon the follow-up, it appears that the correction was not made, or was not carried out in accordance with an abatement plan prepared pursuant to paragraph (c) of this section, the official in charge of the establishment and the appropriate safety and health committee shall be notified of the failure to abate.

(c) The official in charge of the establishment shall promptly prepare an abatement plan with the appropriate participation of the establishment's Safety and Health Official or a designee, if in the judgment of the establishment official the abatement of an unsafe or unhealthful working condition will not be possible within 30 calendar days. Such plan shall contain an explanation of the circumstances of the delay in abatement, a proposed timetable for the abatement, and a summary of steps being taken in the interim to protect employees from being injured as a result of the unsafe or unhealthful working condition. A copy of the plan shall be sent to the safety and health committee, and, if no committee exists, to the representative of the employees. Any changes in an abatement plan will require the preparation of a new plan in accordance with the provisions of this section.

(d) When a hazard cannot be abated within the authority and resources of the official in charge of the establishment, that official shall request assistance from appropriate higher authority. The local safety and health official, any established committee and/or employee representatives, and all personnel subject to the hazard shall be advised of this action and of interim protective measures in effect, and shall be kept informed of subsequent progress on the abatement plan.

(e) When a hazard cannot be abated without assistance of the General Services Administration or other Federal lessor agency, the occupant agency shall act with the lessor agency to secure abatement. Procedures for coordination with the General Services Administration are contained in subpart E of this part.

(f) The procedures OSHA will use to verify Federal agency abatement are included in the private sector guidelines at 29 CFR 1903.19.

[45 FR 69798, Oct. 21, 1980, as amended at 78 FR 47190, Aug. 5, 2013]

§ 1960.31 Inspections by OSHA.

(a) The Secretary or the Secretary's representatives are authorized to conduct, when the Secretary deems necessary, announced or unannounced inspections in the following situations:

(1) Where an agency has not established occupational safety and health committees or where committees no longer operate in conformance to the requirements of subpart F of this part;

(2) In response to a request from half the membership of record of any certified safety and health committee; and

(3) In response to an employee's report of an imminent danger situation, where there is a certified committee, but where the Secretary determines that neither the agency nor the committee has responded to the employee.

(b) The Secretary's inspectors or evaluators are authorized: to enter without delay, and at reasonable times, any building, installation, facility, construction site, or other area, workplace, or environment where work is performed by employees of the agency; to inspect and investigate during regular working hours and at other reasonable times, and within reasonable limits and in a reasonable manner, any such place of employment, and all pertinent conditions, structures, machines, apparatus, devices, equipment, and materials therein, and to question privately any employee, any supervisory employee, and/or any official in charge of an establishment.

(c) The Secretary may also make scheduled inspections as an integral part of OSHA's evaluation of an agency's safety and health program in accordance with subpart J of this part.

(d) OSHA inspections shall follow the general format set forth for agency inspections in other applicable parts of this subpart.

Subpart E—General Services Administration and Other Federal Agencies

§ 1960.34 General provisions.

Within six months of the effective date of this part, the Secretary of Labor and the Administrator of the General Services Administration (GSA) shall initiate a study of conflicts that may exist in their standards concerning Federal buildings, leased space, products purchased or supplied, and other requirements affecting Federal employee safety and health. Both agencies shall establish and publish a joint procedure for resolving conflicting standards. All other Federal agencies that have authority for purchasing equipment, supplies, and materials, and for controlling Government space, as well as the leasing of space, shall also be subject to the requirements of this subpart, including publication of a procedure for resolving conflicting standards.

(a) In order to assist agencies in carrying out their duties under section 19 of the Act, Executive Order 12196, and this part, the Administrator or the Administrator's designee shall:

(1) Upon an agency's request, furnish for any owned or leased space offered to a Federal agency for occupancy:

(i) A report of a recent pre-occupancy inspection to identify serious hazards or serious violations of OSHA standards or approved alternate standards, and

(ii) A plan for abatement of the hazards and violations discovered;

(2) Provide space which:

(i) Meets any special safety and health requirements submitted by the requesting agency, and

(ii) Does not contain either serious hazards or serious violations of OSHA standards or approved alternate standards which cannot be abated;

(3) Repair, renovate, or alter, upon an agency's request, owned or leased space in a planned and controlled manner to reduce or eliminate, whenever possible, any hazardous exposure to the occupant agency's employees;

(4) Accompany, upon request, the Secretary or the Secretary's designee on any inspection or investigation of a facility subject to the authority of the General Services Administration. Requests made for this purpose shall, whenever possible, be made at the GSA regional level in order to facilitate prompt assistance;

(5) Investigate, upon an official agency request, reports of unsafe or unhealthful conditions within the

scope of GSA's responsibility. Such investigation, when requiring an on-site inspection, shall be completed within 24 hours for imminent danger situations, within three working days for potentially serious conditions, and within 20 working days for other safety and health risk conditions;

(6) Abate unsafe or unhealthful conditions disclosed by reports, investigation or inspection within 30 calendar days or submit to the occupant agency's designated liaison official an abatement plan. Such abatement plan shall give priority to the allocation of resources to bring about prompt abatement of the conditions. (GSA shall publish procedures for abatement of hazards in the Federal Property Management Regulations—41 CFR part 101);

(7) Establish an occupancy permit program which will regulate the types of activities and occupancies in facilities in order to avoid incompatible groupings, e.g., chemical or biological laboratories in office space. GSA shall seek to consolidate Federal laboratory operations in facilities designed for such purposes;

(8) Ensure, insofar as possible, that agency safety and health problems still outstanding are resolved, or otherwise answered by acceptable alternatives prior to renegotiation of leases; and

(9) Ensure that GSA or other Federal lessor agencies' building managers maintain a log of reports of unsafe or unhealthful conditions submitted by tenants to include: date of receipt of report, action taken, and final resolution.

(b) *Product safety*. Agencies such as GSA, DOD, and others which procure and provide supplies, equipment, devices, and material for their own use or use by other agencies, except for the design of uniquely military products as set forth in §1960.2(i), shall establish and maintain a product safety program which:

(1) Ensures that items procured will allow user agencies to use such products safely for their designed purpose and will facilitate user compliance with all applicable standards.

(2) Requires that products meet the applicable safety and health requirements of Federal law and regulations issued thereunder;

(3) Ensures that hazardous material will be labelled in accordance with current law or regulation to alert users, shippers, occupational safety and health, and emergency action personnel, and others, to basic information concerning flammability, toxicity, compatibility, first aid procedures, and normal as well as emergency handling and disposal procedures;

(4) Ensures availability of appropriate safety rescue and personal protective equipment to supply user agencies. The writing of Federal procurement specifications will be coordinated by GSA with OSHA/NIOSH as needed to assure purchase of approved products;

(5) Ensures that products recalled by the manufacturer, either voluntarily or by order from a regulatory authority, are removed from inventory. Each recall notice or order shall be forwarded to all agencies which have ordered such product from or through the procuring/supplying Federal agency, e.g., GSA, DOD, etc.;

(6) Includes preparation of FEDSTD 313, Material Safety Data Sheets (MSDS), involving all interested agencies in review to keep the standard current. MSDS provided by agencies or contractors shall meet the requirements of FEDSTD 313 and be furnished to DOD for filing and distribution.

(c) In order to assist agencies in carrying out their duties under section 19 of the Act, Executive Order 12196, and this part, the DOD operates and maintains an automated system to receive, file, reproduce, and make available MSDS data to other Federal agencies through the Government Printing Office or the National Technical Information Services.

(d) All Federal agencies shall use MSDS either provided by DOD, or acquired directly from suppliers, when purchasing hazardous materials (as defined in FEDSTD 313) for local use. These data will be used to develop detailed procedures to advise employees in the workplace of the hazards involved with the materials and to protect them therefrom.

(e) *Safety and health services*. GSA will operate and maintain for user agencies the following services:

(1) Listings in the ''Federal Supply Schedule'' of safety and health services

and equipment which are approved for use by agencies when needed. Examples of such services are: Workplace inspections, training, industrial hygiene surveys, asbestos bulk sampling, and mobile health testing; examples of such equipment are: personal protective equipment and apparel, safety devices, and environmental monitoring equipment;

(2) Rules for assistance in the preparation of agency ''Occupant Emergency Plans'' (formerly called ''Facility Self-Protection Plans''), to be published by GSA at 41 CFR part 101;

(3) An effective maintenance program in the Interagency Motorpool System which will ensure the safety and health of Federal employees utilizing the vehicles. Critical items to be included are: Exhaust systems, brakes, tires, lights, steering, and passenger restraint or other crash protection systems; and

(4) A rapid response system whereby agencies can alert GSA to unsafe or unhealthful items purchased or contracted for by GSA, which in turn will evaluate the reports, initiate corrective action, as appropriate, and advise use agencies of interim protective measures.

§ 1960.35 National Institute for Occupational Safety and Health.

(a) The Director of the National Institute for Occupational Safety and Health (NIOSH) shall, upon request by the Secretary, assist in:

(1) Evaluations of Federal agency safety and health programs;

(2) Investigations of possible safety and health hazards and

(3) Inspections resulting from employee or committee reports of unsafe or unhealthful working conditions.

(b) The Director of NIOSH shall provide a Hazard Evaluation (HE) program for Federal agencies. This program shall be designed to respond to requests for assistance in determining whether or not safety or health hazards are present in a Federal workplace. Requests for such Hazard Evaluations may be submitted to the Director by:

(1) The Secretary of Labor;

(2) The Head of a Federal agency;

(3) An agency safety and health committee if half the committee requests such service; and

(4) Employees who are not covered by a certified safety and health committee.

(c) The Director of NIOSH may assist agencies by providing hazard alerts, technical services, training materials and conducting training programs upon request by an agency and with reimbursement.

Subpart F—Occupational Safety and Health Committees

§ 1960.36 General provisions.

(a) The occupational safety and health committees described in this subpart are organized and maintained basically to monitor and assist an agency's safety and health program. These committees assist agencies to maintain an open channel of communication between employees and management concerning safety and health matters in agency workplaces. The committees provide a method by which employees can utilize their knowledge of workplace operations to assist agency management to improve policies, conditions, and practices.

(b) Agencies may elect to establish safety and health committees meeting the minimum requirements contained in this subpart. Where such committees are not established or fail to meet the minimum requirements established by the Secretary, the Secretary is authorized by section 1–401(i) of Executive Order 12196 to conduct unannounced inspections of agency workplaces when the Secretary determines them necessary.

§ 1960.37 Committee organization.

(a) For agencies which elect to utilize the committee concept, safety and health committees shall be formed at both the national level and, for agencies with field or regional offices, at appropriate levels within the agency. To realize exemption from unannounced OSHA inspections, an agency must form a committee at the national level and at any establishment or grouping of establishments that is to be exempt, keeping the Secretary advised of the locations and activities

where such committees are functioning.

(1) The principal function of the national level committee shall be to consult and provide policy advice on, and monitor the performance of, the agency-wide safety and health program.

(2) Committees at other appropriate levels shall be established at agency establishments or groupings of establishments consistent with the mission, size and organization of the agency and its collective bargaining configuration. The agency shall form committees at the lowest practicable local level. The principal function of the establishment (or local) committees is to monitor and assist in the execution of the agency's safety and health policies and program at the workplaces within their jurisdiction. Any dispute over the meaning of the term ''appropriate levels'' shall be resolved by the Secretary.

(b) Committees shall have equal representation of management and nonmanagement employees, who shall be members of record.

(1) Management members of both national level and establishment level committees shall be appointed in writing by the person empowered to make such appointments.

(2) Nonmanagement members of establishment level committees shall represent all employees of the establishment and shall be determined according to the following rules:

(i) Where employees are represented under collective bargaining arrangements, members shall be appointed from among those recommended by the exclusive bargaining representative;

(ii) Where employees are not represented under collective bargaining arrangements, members shall be determined through procedures devised by the agency which provide for effective representation of all employees; and

(iii) Where some employees of an establishment are covered under collective bargaining arrangements and others are not, members shall be representative of both groups.

(3) Nonmanagement members of national level committees shall be determined according to the following rules:

(i) Where employees are represented by organizations having exclusive recognition on an agency basis or by organizations having national consultation rights, some members shall be determined in accordance with the terms of collective bargaining agreements and some members shall be selected from those organizations having consultation rights, and

(ii) Where employees are not represented by organizations meeting the criteria of paragraph (b)(3)(i) of this section, members shall be determined through procedures devised by the agency which provide for effective representation of all employees.

(c) Committee members should serve overlapping terms. Such terms should be of at least two years duration, except when the committee is initially organized.

(d) The committee chairperson shall be nominated from among the committee's members and shall be elected by the committee members. Management and nonmanagement members should alternate in this position. Maximum service time as chairperson should be two consecutive years.

(e) Committees shall establish a regular schedule of meetings and special meetings shall be held as necessary; establishment level committees shall meet at least quarterly and national committees shall meet at least annually.

(f) Adequate advance notice of committee meetings shall be furnished to employees and each meeting shall be conducted pursuant to a prepared agenda.

(g) Written minutes of each committee meeting shall be maintained and distributed to each committee member, and upon request, shall be made available to employees and to the Secretary.

§ 1960.38 Committee formation.

(a) Upon forming such committees, heads of agencies shall submit information to the Secretary concerning the existence, location, and coverage, in terms of establishments and population, of such committees, certifying to the Secretary that such committees meet the requirements of this subpart. The information submitted should include the name and telephone numbers of the chairperson of each committee, and should be updated annually as part

of the annual report required by § 1960.74 to reflect any changes that may have occurred.

(b) If, upon evaluation, the Secretary determines that the operations of a committee do not meet the requirements of this subpart, the Secretary shall notify the agency and identify the deficiencies to be remedied. If the agency does not satisfy the Secretary within 90 days that the committee meets the requirements of this subpart, the committee shall not be deemed a committee under Executive Order 12196 and this part.

[45 FR 69798, Oct. 21, 1980; 45 FR 77003, Nov. 21, 1980, as amended at 49 FR 3080, Jan. 24, 1984]

§ 1960.39 Agency responsibilities.

(a) Agencies shall make available to committees all agency information relevant and necessary to their duties, except where prohibited by law. Examples of such information include, but are not limited to: The agency's safety and health policies and program; human and financial resources available to implement the program; accident, injury, and illness data; epidemiological data; employee exposure monitoring data; Material Safety Data Sheets; inspection reports; reprisal investigation reports; abatement plans; NIOSH hazard evaluation reports; and internal and external evaluation reports.

(b) Agencies shall provide all committee members appropriate training as required by subpart H of this part.

§ 1960.40 Establishment committee duties.

(a) The safety and health committee is an integral part of the safety and health program, and helps ensure effective implementation of the program at the establishment level.

(b) An establishment committee formed under this subpart shall, except where prohibited by law:

(1) Monitor and assist the safety and health program at establishments under its jurisdiction and make recommendations to the official in charge on the operation of the program;

(2) Monitor findings and reports of workplace inspections to confirm that appropriate corrective measures are implemented;

(3) When requested by the agency Safety and Health Official, or when the committee deems it necessary for effective monitoring of agency establishment inspection procedures, participate in inspections of the establishment;

(4) Review internal and external evaluation reports and make recommendations concerning the establishment safety and health program;

(5) Review, and recommend changes, as appropriate, to procedures for handling safety and health suggestions and recommendations from employees;

(6) When requested by the Designated Agency Safety and Health Official, or when the committee deems it necessary, comment on standards proposed pursuant to the provisions of subpart C of this part;

(7) Monitor and recommend changes, as required, in the level of resources allocated and spent on the establishment safety and health program;

(8) Review agency responses to reports of hazardous conditions, safety and health program deficiencies, and allegations of reprisal;

(9) Report their dissatisfaction to the Secretary if half a committee determines there are deficiencies in the establishment's safety and health program or is not satisfied with the agency's reports of reprisal investigations; and

(10) Request the Secretary to conduct an evaluation or inspection if half the members of record are not satisfied with an agency's response to a report of hazardous working conditions.

§ 1960.41 National committee duties.

National committees established under this subpart shall, except where prohibited by law:

(a) Monitor performance of the agency safety and health program and make policy recommendations to the head of the agency on the operation of the program;

(b) Monitor and assist in the development and operation of the agency's establishment committees. As the committee deems appropriate, monitor and review: Reports of inspections; internal

and external evaluation reports; agency safety and health training programs; proposed agency standards; agency plans for abating hazards; and responses to reports of hazardous conditions; safety and health program deficiencies; and allegations of reprisal;

(c) Monitor and recommend changes in the resources allocated to the entire agency safety and health program;

(d) Report their dissatisfaction to the Secretary if half a committee determines there are deficiencies in the agency's safety and health program or is not satisfied with the agency's reports of reprisal investigations; and

(e) Request the Secretary to conduct an evaluation or inspection if half the members of record are not satisfied with an agency's response to a report of hazardous working conditions.

Subpart G—Allegations of Reprisal

§ 1960.46 Agency responsibility.

(a) The head of each agency shall establish procedures to assure that no employee is subject to restraint, interference, coercion, discrimination or reprisal for filing a report of an unsafe or unhealthful working condition, or other participation in agency occupational safety and health program activities, or because of the exercise by such employee on behalf of himself or herself or others of any right afforded by section 19 of the Act, Executive Order 12196, or this part. These rights include, among other, the right of an employee to decline to perform his or her assigned task because of a reasonable belief that, under the circumstances the task poses an imminent risk of death or serious bodily harm coupled with a reasonable belief that there is insufficient time to seek effective redress through normal hazard reporting and abatement procedures established in accordance with this part.

(b) Based on the Secretary's evaluation of agencies' procedures for protecting employees from reprisal, the Secretary shall report to the President by September 30, 1982 his findings and recommendations for improvements in procedures for the investigation and resolution of allegations of reprisal.

§ 1960.47 Results of investigations.

Each agency shall keep occupational safety and health committees advised of agency activity regarding allegations of reprisal and any agency determinations thereof. Agency officials shall provide copies of reprisal investigation findings, if any, to the Secretary and to the appropriate safety and health committee.

Subpart H—Training

§ 1960.54 Training of top management officials.

Each agency shall provide top management officials with orientation and other learning experiences which will enable them to manage the occupational safety and health programs of their agencies. Such orientation should include coverage of section 19 of the Act, Executive Order 12196, the requirements of this part, and the agency safety and health program.

§ 1960.55 Training of supervisors.

(a) Each agency shall provide occupational safety and health training for supervisory employees that includes: supervisory responsibility for providing and maintaining safe and healthful working conditions for employees, the agency occupational safety and health program, section 19 of the Act, Executive Order 12196, this part, occupational safety and health standards applicable to the assigned workplaces, agency procedures for reporting hazards, agency procedures for reporting and investigating allegations of reprisal, and agency procedures for the abatement of hazards, as well as other appropriate rules and regulations.

(b) This supervisory training should include introductory and specialized courses and materials which will enable supervisors to recognize and eliminate, or reduce, occupational safety and health hazards in their working units. Such training shall also include the development of requisite skills in managing the agency's safety and health program within the work unit, including the training and motivation of subordinates toward assuring safe and healthful work practices.

§ 1960.56 Training of safety and health specialists.

(a) Each agency shall provide occupational safety and health training for safety and health specialists through courses, laboratory experiences, field study, and other formal learning experiences to prepare them to perform the necessary technical monitoring, consulting, testing, inspecting, designing, and other tasks related to program development and implementation, as well as hazard recognition, evaluation and control, equipment and facility design, standards, analysis of accident, injury, and illness data, and other related tasks.

(b) Each agency shall implement career development programs for their occupational safety and health specialists to enable the staff to meet present and future program needs of the agency.

§ 1960.57 Training of safety and health inspectors.

Each agency shall provide training for safety and health inspectors with respect to appropriate standards, and the use of appropriate equipment and testing procedures necessary to identify and evaluate hazards and suggest general abatement procedures during or following their assigned inspections, as well as preparation of reports and other documentation to support the inspection findings.

§ 1960.58 Training of collateral duty safety and health personnel and committee members.

Within six months after October 1, 1980, or on appointment of an employee to a collateral duty position or to a committee, each agency shall provide training for collateral duty safety and health personnel and all members of certified occupational safety and health committees commensurate with the scope of their assigned responsibilities. Such training shall include: The agency occupational safety and health program; section 19 of the Act; Executive Order 12196; this part; agency procedures for the reporting, evaluation and abatement of hazards; agency procedures for reporting and investigating allegations of reprisal, the recognition of hazardous conditions and environments; identification and use of occupational safety and health standards, and other appropriate rules and regulations.

§ 1960.59 Training of employees and employee representatives.

(a) Each agency shall provide appropriate safety and health training for employees including specialized job safety and health training appropriate to the work performed by the employee, for example: Clerical; printing; welding; crane operation; chemical analysis, and computer operations. Such training also shall inform employees of the agency occupational safety and health program, with emphasis on their rights and responsibilities.

(b) Occupational safety and health training for employees of the agency who are representatives of employee groups, such as labor organizations which are recognized by the agency, shall include both introductory and specialized courses and materials that will enable such groups to function appropriately in ensuring safe and healthful working conditions and practices in the workplace and enable them to effectively assist in conducting workplace safety and health inspections. Nothing in this paragraph shall be construed to alter training provisions provided by law, Executive Order, or collective bargaining arrangements.

§ 1960.60 Training assistance.

(a) Agency heads may seek training assistance from the Secretary of Labor, the National Institute for Occupational Safety and Health and other appropriate sources.

(b) After the effective date of Executive Order 12196, the Secretary shall, upon request and with reimbursement, conduct orientation for Designated Agency Safety and Health Officials and/or their designees which will enable them to manage the occupational safety and health programs of their agencies. Such orientation shall include coverage of section 19 of the Act, Executive Order 12196, and the requirements of this part.

(c) Upon request and with reimbursement, the Department of Labor shall

provide each agency with training materials to assist in fulfilling the training needs of this subpart, including resident and field training courses designed to meet selected training needs of agency safety and health specialists, safety and health inspectors, and collateral duty safety and health personnel. These materials and courses in no way reduce each agency's responsibility to provide whatever specialized training is required by the unique characteristics of its work.

(d) In cooperation with OPM, the Secretary will develop guidelines and/or provide materials for the safety and health training programs for high-level managers, supervisors, members of committees, and employee representatives.

Subpart I—Recordkeeping and Reporting Requirements

SOURCE: 69 FR 68804, Nov. 26, 2004, unless otherwise noted.

§ 1960.66 Purpose, scope and general provisions.

(a) The purpose of this subpart is to establish uniform requirements for collecting and compiling by agencies of occupational safety and health data, for proper evaluation and necessary corrective action, and to assist the Secretary in meeting the requirement to develop and maintain an effective program of collection, compilation, and analysis of occupational safety and health statistics.

(b) Except as modified by this subpart, Federal agency injury and illness recording and reporting requirements shall comply with the requirements under 29 CFR Part 1904, subparts C, D, E, and G, except that the definition of ''establishment'' found in 29 CFR 1960.2(h) will remain applicable to Federal agencies.

(c) Each agency shall utilize the information collected through its management information system to identify unsafe and unhealthful working conditions, and to establish program priorities.

(d) The provisions of this subpart are not intended to discourage agencies from utilizing recordkeeping and reporting forms which contain a more detailed breakdown of information than the recordkeeping and reporting forms provided by the Department of Labor. Because of the unique nature of the national recordkeeping program, Federal agencies must have recording and reporting requirements that are the same as 29 CFR Part 1904 for determining which injuries and illnesses will be entered into the records and how they are entered. All other injury and illness recording and reporting requirements used by any Federal agency may be more stringent than, or supplemental to, the requirements of 29 CFR Part 1904, but must not interfere with the agency's ability to provide the injury and illness information required by 29 CFR Part 1904.

(e) Information concerning occupational injuries and illnesses or accidents which, pursuant to statute or Executive Order, must be kept secret in the interest of national defense or foreign policy shall be recorded on separate forms. Such records shall not be submitted to the Department of Labor but may be used by the appropriate Federal agency in evaluating the agency's program to reduce occupational injuries, illnesses and accidents.

NOTE TO § 1960.66: The recording or reporting of a work-related injury, illness or fatality does not constitute an admission that the Federal agency, or other individual was at fault or otherwise responsible for purposes of liability. Such recording or reporting does not constitute an admission of the existence of an employer/employee relationship between the individual recording the injury and the injured individual. The recording or reporting of any such injury, illness or fatality does not mean that an OSHA rule has been violated or that the individual in question is eligible for workers' compensation or any other benefits. The requirements of this part do not diminish or modify in any way a Federal agency's responsibilities to report or record injuries and illnesses as required by the Office of Workers' Compensation Programs under the Federal Employees' Compensation Act (FECA), 5 U.S.C. 8101 *et seq*.

(f) Retention and access of employee exposure and medical records shall be in accordance with 29 CFR 1910.1020.

[69 FR 68804, Nov. 26, 2004, as amended at 78 FR 47190, Aug. 5, 2013]

§ 1960.67 Federal agency certification of the injury and illness annual summary (OSHA 300–A or equivalent).

As required by 29 CFR 1904.32, a company executive must certify that he or she has examined the OSHA 300 Log and that he or she believes, based on his or her knowledge of the process by which the information was recorded, that the annual summary is correct and complete. For Federal establishments, the person who performs the certification shall be one of the following:

(a) The senior establishment management official,

(b) The head of the Agency for which the senior establishment management official works, or

(c) Any management official who is in the direct chain of command between the senior establishment management official and the head of the Agency.

NOTE TO § 1960.67: The requirement for certification of Federal agency injury and illness records in this section is necessary because the private sector position titles contained in 29 CFR part 1904 do not fit the Federal agency position titles for agency executives. The Federal officials listed in this section are intended to be the equivalent of the private sector officials who are required to certify records under § 1904.32(b)(4).

§ 1960.68 Prohibition against discrimination.

Section 1904.36 of this chapter refers to Section 11(c) of the Occupational Safety and Health Act. For Federal agencies, the words ''Section 11(c)'' shall be read as ''Executive Order 12196 Section 1–201(f).''

NOTE TO § 1960.68: Section 11(c) of the Occupational Safety and Health Act only applies to private sector employers and the U.S. Postal Service. The corresponding prohibitions against discrimination applicable to Federal employers are contained in Section 1–201(f) of Executive Order 12196, 45 FR 12769, 3 CFR, 1980 Comp. p. 145.

§ 1960.69 Retention and updating of old forms.

Federal agencies must retain copies of the recordkeeping records utilized under the system in effect prior to January 1, 2005 for five years following the year to which they relate and continue to provide access to the data as though these forms were the OSHA Form 300 Log and Form 301 Incident Report. Agencies are not required to update the old forms.

§ 1960.70 Reporting of serious accidents.

Agencies must provide the Office of Federal Agency Programs with a summary report of each fatal and catastrophic accident investigation. The summaries shall address the date/time of accident, agency/establishment named and location, and consequences, description of operation and the accident, causal factors, applicable standards and their effectiveness, and agency corrective/preventive actions.

NOTE TO § 1960.70: The requirements of this section are in addition to the requirements for reporting fatalities and multiple hospitalization incidents to OSHA under 29 CFR 1904.39.

§ 1960.71 Agency annual reports.

(a) The Act and E.O. 12196 require all Federal agency heads to submit to the Secretary an annual report on their agency's occupational safety and health program, containing such information as the Secretary prescribes.

(1) Each agency must submit to the Secretary by May 1 of each year a report describing the agency's occupational safety and health program of the previous calendar year and objectives for the current fiscal year. The report shall include a summary of the agency's self-evaluation finding as required by § 1960.78(b).

(2) The Secretary must provide the agencies with the guidelines and format for the reports at the time they are requested.

(3) The agency reports will be used in preparing the Secretary's report to the President.

(b) The Secretary will submit to the President by January 1 of each year a summary report of the status of the occupational safety and health of Federal employees based on agency reports, evaluations of individual agency progress and problems in correcting

unsafe or unhealthful working conditions, and recommendations for improving their performance.

[69 FR 68804, Nov. 26, 2004, as amended at 78 FR 47190, Aug. 5, 2013]

§ 1960.72 Reporting Federal Agency Injury and Illness Information.

(a) Each agency must submit to the Secretary by May 1 of each year all information included on the agency's previous calendar year's occupational injury and illness recordkeeping forms. The information submitted must include all data entered on the OSHA Form 300, Log of Work-Related Injuries and Illnesses (or equivalent); OSHA Form 301, Injury and Illness Incident Report (or equivalent); and OSHA Form 300A, Summary of Work-Related Injuries and Illnesses (or equivalent).

(b) The Secretary must provide each agency by January 15 of each year with the format and guidelines for electronically submitting the agency's occupational injury and illness recordkeeping information.

(c) Each agency must submit to the Secretary by May 1, 2014, a list of all establishments. The list must include information about the department/agency affiliation, NAICS code, a street address, city, state and zip code. Federal agencies are also responsible for updating their list of establishments by May 1 of each year when they submit the annual report to the Secretary required by § 1960.71(a)(1).

[78 FR 47190, Aug. 5, 2013]

§ 1960.73 Federal agency injury and illness recordkeeping forms.

(a) When filling out the OSHA Form 300 or equivalent, each agency must enter the employee's OPM job series number and job title in Column (c).

(b) When recording the injuries and illnesses of uncompensated volunteers, each agency must enter a ''V'' before the OPM job series number in Column (c) of the OSH Form 300 log or equivalent.

(c) Each agency must calculate the total number of hours worked by uncompensated volunteers.

[78 FR 47191, Aug. 5, 2013]

§§ 1960.74 [Reserved]

Subpart J—Evaluation of Federal Occupational Safety and Health Programs

§ 1960.78 Purpose and scope.

(a) The purpose of this subpart is to establish a comprehensive program for the evaluation of Federal employee occupational safety and health programs. This subpart includes the responsibilities of agency heads in conducting self-evaluations of the effectiveness of their occupational safety and health programs, and the responsibilities of the Secretary in evaluating the extent to which each agency head has developed and implemented agency programs in accordance with the requirements of Executive Order 12196 and this part.

(b) Agency heads shall develop and implement a program for evaluating the effectiveness of their agency's occupational safety and health program. An annual summary report shall be submitted to the Secretary covering self-evaluations conducted during the previous year.

(c) The Secretary shall conduct a comprehensive evaluation of each Federal agency's occupational safety and health program. Evaluations shall be conducted on a regular schedule to determine the performance levels of each agency's program. The Secretary shall submit to the President each year: A summary report of the status of the occupational safety and health of Federal employees; Department of Labor evaluations, together with agency responses, of individual agency progress and problems in correcting unsafe and unhealthful working conditions, and recommendations for improving agency's performance.

§ 1960.79 Self-evaluations of occupational safety and health programs.

Agency heads shall develop and implement a program of self-evaluations to determine the effectiveness of their occupational safety and health programs. The self-evaluations are to include qualitative assessments of the extent to which their agency safety and health programs are:

(a) Developed in accordance with the requirements set forth in Executive Order 12196 and this part and,

(b) Implemented effectively in all agency field activities.

Agencies needing assistance in developing a self-evaluation program should contact the Secretary.

§ 1960.80 Secretary's evaluations of agency occupational safety and health programs.

(a) In accordance with section 1–401(h), the Secretary shall develop a comprehensive program for evaluating an agency's occupational safety and health program. To accomplish this, the Secretary shall conduct:

(1) A complete and extensive evaluation of all elements of an agency's occupational safety and health program on a regular basis;

(2) Special studies of limited areas of an agency's occupational safety and health program as deemed necessary by the Secretary; and

(3) Field reviews and scheduled inspections of agency workplaces as deemed necessary by the Secretary.

(b) The Secretary shall develop and distribute to Federal agencies detailed information on the Department of Labor's evaluation program. The information shall include, but is not limited to:

(1) The major program elements included in a complete and extensive evaluation of an agency's occupational safety and health program;

(2) The methods and factors used to determine the effectiveness of each element of an agency's program;

(3) The factors used to define ''large'' or ''more hazardous'' Federal agencies, establishments, or operations;

(4) The procedures for conducting evaluations including field visits and scheduled inspections; and

(5) The reporting format for agency heads in submitting annual summaries of their self-evaluation programs.

(c) Prior to the initiation of an agency evaluation, the Department of Labor will review the annual agency self-evaluation summary report. The Secretary will then develop a program evaluation plan before the initiation of an agency evaluation. A copy of the plan shall be furnished to the agency to be evaluated at the time of the notification of the evaluation.

(d) To facilitate the evaluation process and to insure full understanding of the procedures to be followed and the support required from the agency, the Secretary, or the Secretary's representative, shall conduct an opening conference with the agency head or designee. At the opening conference, the Secretary's authority and evaluation plan will be explained.

(e) The agency evaluation should be completed within 90 calendar days of the date of the opening conference.

(f) A report of the evaluation shall be submitted to the agency head by the Secretary within 90 calendar days from the date of the closing conference.

(g) Agency heads shall respond to the evaluation report within 60 calendar days of receipt of the report.

[45 FR 69798, Oct. 21, 1980; 45 FR 77003, Nov. 21, 1980]

Subpart K—Field Federal Safety and Health Councils

§ 1960.84 Purpose.

(a) Executive Order 12196 provides that the Secretary shall ''facilitate the exchange of ideas and information throughout the Government about occupational safety and health.''

(b) Consistent with this objective, the Secretary will continue to sponsor and/or provide guidance for those Field Federal Safety and Health Councils now established and in operation, and establish new field councils as necessary. The field councils will consist primarily of qualified representatives of local area Federal field activities whose duties pertain to occupational safety and health, and also of representatives of recognized local labor organizations, or other civilian employee organizations, at local area Federal field activities. For the purpose of this subpart the definition of field activity will be provided by each agency.

§ 1960.85 Role of the Secretary.

(a) The Secretary shall maintain liaison with agency heads to ensure that they encourage their field activities to participate actively in field council

programs. To ensure maximum participation, the field councils' annual reports to the Secretary shall provide descriptions of the degree of management and employee participation by the defined Federal field activities. The Secretary shall annually furnish each agency head with a report consolidating the information received as to the participation of the agency's several field installations in field council activities.

(b) The Secretary shall provide leadership and guidance and make available necessary equipment, supplies, and staff services to the Field Federal Safety and Health Councils to assist them in carrying out their responsibilities. The Secretary shall also provide consultative and technical services to field councils. These services shall involve aid in any phase of developing and planning programs; and in sponsoring, conducting or supporting safety and health training courses.

§ 1960.86 Establishing councils.

(a) Those field councils established and in operation prior to the effective date of this subpart will continue to function without interruption provided they are operating in accordance with the provision of their charter and this subpart.

(b) The Secretary may establish a council in any area where ten or more Federal establishments totaling 300 or more employees are located within an area having a radius of 50 miles, and there is substantial agreement among the agencies that such a council would be useful. In any such area where there is no council already established, a field representative of the Secretary may, upon his own initiative or at the request of any establishment within the area, contact representatives of all establishments within the area and encourage the organization of a field council.

(c) After a new council has been organized, officers elected, and articles of organization drafted and accepted by the council membership, a formal request for recognition as a field council shall be sent to the Secretary. Upon approval of the Articles of Organization, a charter will be issued.

(d) At the first general meeting of the council, committees should be appointed and the cooperation of all participants should be solicited to aid the functioning of committees and the successful accomplishment of the council's objectives.

§ 1960.87 Objectives.

The basic objective of field councils is to facilitate the exchange of ideas and information to assist agencies to reduce the incidence, severity and cost of occupational accidents, injuries, and illnesses. Field councils shall act on behalf of the Secretary or his designees on occupational safety and health activities in carrying out within their respective geographic areas the following functions:

(a) To act as a clearinghouse on information and data on occupational accidents, injuries, and illnesses and their prevention.

(b) To plan, organize and conduct field council meetings or programs which will give technical advice and information on occupational safety and health to representatives of participating agencies and employee organizations.

(c) To promote improvement of safety and health programs and organizations in each Federal agency represented or participating in council activities.

(d) To promote coordination, cooperation, and sharing of resources and expertise to aid agencies with inadequate or limited resources. These objectives can be accomplished in a variety of ways. For example, field councils could organize and conduct training programs for employee representatives, collateral duty and professional safety and health personnel, coordinate or promote programs for inspections, or, on request, conduct inspections and evaluations of the agencies' safety and health programs.

(e) To provide Federal Executive Boards, Federal Executive Associations, labor union organizations and other employee representatives with information on the administrative and technical aspects of safety and health programs.

(f) To evaluate the safety and health problems peculiar to local conditions

and facilitate solutions to these problems through council activities.

(g) To develop a cooperative relationship with local community leaders by informing them of the existing functions and objectives of the council and by calling on them for support and participation in council meetings and activities.

§ 1960.88 Membership and participation.

(a) Each field council shall consist of the designated representatives of local Federal activities appointed by their respective activity heads, after consultation with appropriate employee representatives and appropriate certified safety and health committees.

(b) Federal agency heads should encourage each field activity having responsibility for the safety and health of agency employees to participate in the programs of these councils.

(c) Each activity head shall appoint an equal number of officially designated representatives (with designated alternates), from management and from nonmanagement employees, consistent with applicable collective bargaining arrangements.

(d) Representatives shall be selected from individuals in the following categories:

(1) Federal occupational safety and health professionals.

(2) Related Federal professionals, or collateral duty personnel. This includes persons employed in professions or occupations related to or concerned with safety and health of employees.

(3) Line management officials.

(4) Representatives of recognized Federal labor or other employee organizations.

(i) Where certified occupational safety and health committees exist, nonmanagement members of the committees shall be given the opportunity to select one individual for official appointment to field councils by the activity head.

(ii) Where employees are represented by collective bargaining arrangements, but no committee exists, nonmanagement members of field councils shall be selected from among those recommended by the exclusive bargaining representatives for official appointment to field councils by the activity head.

(iii) Where some employees in an activity are represented by collective bargaining arrangements and others are not, the agency head should solicit nominations for the agency's designated nonmanagement representative and alternate both from lawful labor organization(s) with collective bargaining status and from employees not represented through collective bargaining and should select from the nominees for official appointment as designated employee representatives on the field council.

(e) Representatives from non-Federal organizations. Associate membership may be granted to any non-Federally employed person who demonstrated interest in occupational safety and health. An associate member has no voting rights and may not hold any office.

(f) No maximum limitation shall be imposed by a council on itself, in regard to the numbers of personnel in any of the above categories that may attend meetings and/or participate in field council activities. An agency is free to have any number of individuals, in addition to the officially designated representatives participate in council activities.

(g) Only officially designated agency representatives or their alternates shall have voting privileges. All representatives and participants shall serve without additional compensation.

(h) Travel funds shall be made available equally to management and nonmanagement employee representatives.

§ 1960.89 Organization.

(a) Field council officers shall include, as a minimum, a chairperson, vice chairperson, and secretary. Officers shall be elected for a one or two-year term on a calendar year basis by a majority vote of the designated representatives. Election of officers shall be held at least 60 days before the beginning of a calendar year. The election may be conducted at a regularly scheduled meeting or by letter ballot.

(b) Each council shall notify the appropriate OSHA Regional Office and the Office of Federal Agency Safety and Health Programs of the name,

agency address, and telephone number of each newly elected official.

(c) Each council shall have an Executive Committee consisting of all elected officers, chairpersons of appointed committees and the immediate past chairperson of the field council.

(d) In addition to the Executive Committee, each council shall have either a membership committee, a program committee and a finance committee, or a council official designated responsibility in these areas. Additional committees may be appointed by the chairperson for specific purposes as warranted.

§ 1960.90 Operating procedures.

(a) The Executive Committee of each council shall meet at least 45 days before the beginning of each calendar year to approve an annual program for the council designed to accomplish the objectives and functions stated in § 1960.87. In addition, the Executive Committee shall meet periodically to ensure that the meetings and other activities of the council are being conducted as outlined in the council schedule.

(b) The council program shall include at least four meetings or activities per year dealing with occupational safety and health issues.

(c) Each field council shall submit to the Secretary or his designee by March 15 of each year a report describing the activities and programs of the previous calendar year and plans for the current year. In addition, the report shall address the participation and attendance of designated representatives of the council. The Office of Federal Agency Safety and Health Programs, OSHA, shall furnish guidelines to field councils concerning the preparation of this report.

(d) Upon determination that a council is not operating in accordance with its charter and the provisions of this subpart, and after consultation with appropriate OSHA regional officials, the Secretary shall revoke the council's charter. Upon revocation of a charter, the council shall surrender all its government property to the appropriate OSHA regional official. Any continuing or future organization in the same geographical area shall not use the title Field Federal Safety and Health Council, or any derivation thereof, unless formally rechartered by the Secretary. Notification of revocation of a council's charter shall be sent to the chairperson, where identifiable, and to the appropriate OSHA Regional Office.

PART 1975—COVERAGE OF EMPLOYERS UNDER THE WILLIAMS-STEIGER OCCUPATIONAL SAFETY AND HEALTH ACT OF 1970

Sec.

1975.1 Purpose and scope.
1975.2 Basis of authority.
1975.3 Extent of coverage.
1975.4 Coverage.
1975.5 States and political subdivisions thereof.
1975.6 Policy as to domestic household employment activities in private residences.

AUTHORITY: Secs. 2, 3, 4, 8, Occupational Safety and Health Act of 1970 (29 U.S.C. 651, 652, 653, 657); Secretary of Labor's Order No. 12–71 (36 FR 8754).

SOURCE: 37 FR 929, Jan. 21, 1972, unless otherwise noted.

§ 1975.1 Purpose and scope.

(a) Among other things, the Williams-Steiger Act poses certain duties on employers. This part has the limited purpose and scope of clarifying which persons are considered to be employers either as a matter of interpretation of the intent and terms of the Act or as a matter of policy appropriate to administering and enforcing the Act. In short, the purpose and scope of this part is to indicate which persons are covered by the Act as employers and, as such, subject to the requirements of the Act.

(b) It is not the purpose of this part to indicate the legal effect of the Act, once coverage is determined. Section 4(b)(1) of the Act provides that the statute shall be inapplicable to working conditions to the extent they are subject to another Federal agency's exercise of different statutory authority affecting the occupational safety and health aspects of those conditions. Therefore, a person may be considered an employer covered by the Act, and

yet standards issued under the Act respecting certain working conditions would not be applicable to the extent those conditions were subject to another agency's authority.

§ 1975.2 Basis of authority.

The power of Congress to regulate employment conditions under the Williams-Steiger Occupational Safety and Health Act of 1970, is derived mainly from the Commerce Clause of the Constitution. (section 2(b), Pub. L. 91–596; U.S. Constitution, Art. I, Sec. 8, Cl. 3; ''United States v. Darby,'' 312 U.S. 100.) The reach of the Commerce Clause extends beyond Federal regulation of the channels and instrumentalities of interstate commerce so as to empower Congress to regulate conditions or activities which affect commerce even though the activity or condition may itself not be commerce and may be purely intrastate in character. (''Gibbons v. Ogden,'' 9 Wheat. 1, 195; ''United States v. Darby,'' supra; ''Wickard v. Filburn,'' 317 U.S. 111, 117; and ''Perez v. United States,'' 91 S. Ct. 1357 (1971).) And it is not necessary to prove that any particular intrastate activity affects commerce, if the activity is included in a class of activities which Congress intended to regulate because the class affects commerce. (''Heart of Atlanta Motel, Inc. v. United States,'' 379 U.S. 241; ''Katzenbach v. McClung,'' 379 U.S. 294; and ''Perez v. United States,'' supra.) Generally speaking, the class of activities which Congress may regulate under the commerce power may be as broad and as inclusive as Congress intends, since the commerce power is plenary and has no restrictions placed on it except specific constitutional prohibitions and those restrictions Congress, itself, places on it. (''United States v. Wrightwood Dairy Co.,'' 315 U.S. 110; and ''United States v. Darby,'' supra.) Since there are no specific constitutional prohibitions involved, the issue is reduced to the question: How inclusive did Congress intend the class of activities to be under the Williams-Steiger Act?

§ 1975.3 Extent of coverage.

(a) Section 2(b) of the Williams-Steiger Occupational Safety and Health Act (Public Law 91–596) sets forth the purpose and policy of Congress in enacting this legislation. In pertinent part, that section reads as follows:

> (b) Congress declares it to be its purpose and policy, through the exercise of its powers to regulate commerce among the several States and with foreign nations and to provide for the general welfare, to assure so far as possible every working man and woman in the Nation safe and healthful working conditions and to preserve our human resources * * *

Congressman William Steiger described the scope of the Act's coverage in the following words during a discussion of the legislation on the floor of the House of Representatives:

> The coverage of this bill is as broad, generally speaking, as the authority vested in the Federal Government by the commerce clause of the Constitution (Cong. Rec., vol. 116, p. H–11899, Dec. 17, 1970)

The legislative history, as a whole, clearly shows that every amendment or other proposal which would have resulted in any employee's being left outside the protections afforded by the Act was rejected. The reason for excluding no employee, either by exemption or limitation on coverage, lies in the most fundamental of social purposes of this legislation which is to protect the lives and health of human beings in the context of their employment.

(b) The Williams-Steiger Act includes special provisions (sections 19 and 18(c)(6)) for the protection of Federal and State employees to whom the Act's other provisions are made inapplicable under section 3(5), which excludes from the definition of the term ''employer'' both the United States and any State or political subdivision of a State.

(c) In the case of section 4(b)(1) of the Act, which makes the Act inapplicable to working conditions to the extent they are protected under laws administered by other Federal agencies, Congress did not intend to grant any general exemptions under the Act; its sole purpose was to avoid duplication of effort by Federal agencies in establishing a national policy of occupational safety and health protection.

(d) Interpretation of the provisions and terms of the Williams-Steiger Act

must of necessity be consistent with the express intent of Congress to exercise its commerce power to the extent that, ''so far as possible, every working man and woman in the Nation'' would be protected as provided for in the Act. The words ''so far as possible'' refer to the practical extent to which governmental regulation and expended resources are capable of achieving safe and healthful working conditions; the words are not ones of limitation on coverage. The controlling definition for the purpose of coverage under the Act is that of ''employer'' contained in section 3(5). This term is defined as follows:

(5) The term ''employer'' means any person engaged in a business affecting commerce who has employees, but does not include the United States or any State or political subdivision of a State.

In carrying out the broad coverage mandate of Congress, we interpret the term ''business'' in the above definition as including any commercial or noncommercial activity affecting commerce and involving the employment of one or more employees; the term ''commerce'' is defined in the Act itself, in section 3(3). Since the legislative history and the words of the statute, itself, indicate that Congress intended the full exercise of its commerce power in order to reduce employment-related hazards which, as a whole impose a substantial burden on commerce, it follows that all employments where such hazards exist or could exist (that is, those involving the employment of one or more employees) were intended to be regulated as a class of activities which affects commerce.

§ 1975.4 Coverage.

(a) *General.* Any employer employing one or more employees would be an ''employer engaged in a business affecting commerce who has employees'' and, therefore, he is covered by the Act as such.

(b) *Clarification as to certain employers*—(1) *The professions, such as physicians, attorneys, etc.* Where a member of a profession, such as an attorney or physician, employs one or more employees such member comes within the definition of an employer as defined in the Act and interpreted thereunder and, therefore, such member is covered as an employer under the Act and required to comply with its provisions and with the regulations issued thereunder to the extent applicable.

(2) *Agricultural employers.* Any person engaged in an agricultural activity employing one or more employees comes within the definition of an employer under the Act, and therefore, is covered by its provisions. However, members of the immediate family of the farm employer are not regarded as employees for the purposes of this definition.

(3) *Indians.* The Williams-Steiger Act contains no special provisions with respect to different treatment in the case of Indians. It is well settled that under statutes of general application, such as the Williams-Steiger Act, Indians are treated as any other person, unless Congress expressly provided for special treatment. ''FPC v. Tuscarora Indian Nation,'' 362 U.S. 99, 115–118 (1960); ''Navajo Tribe v. N.L.R.B.,'' 288 F.2d 162, 164–165 (D.C. Cir. 1961), cert. den. 366 U.S. 928 (1961). Therefore, provided they otherwise come within the definition of the term ''employer'' as interpreted in this part, Indians and Indian tribes, whether on or off reservations, and non-Indians on reservations, will be treated as employers subject to the requirements of the Act.

(4) *Nonprofit and charitable organizations.* The basic purpose of the Williams-Steiger Act is to improve working environments in the sense that they impair, or could impair, the lives and health of employees. Therefore, certain economic tests such as whether the employer's business is operated for the purpose of making a profit or has other economic ends, may not properly be used as tests for coverage of an employer's activity under the Williams-Steiger Act. To permit such economic tests to serve as criteria for excluding certain employers, such as nonprofit and charitable organizations which employ one or more employees, would result in thousands of employees being left outside the protections of the Williams-Steiger Act in disregard of the clear mandate of Congress to assure ''every working man and woman in the

Nation safe and healthful working conditions * * *''. Therefore, any charitable or non-profit organization which employs one or more employees is covered under the Williams-Steiger Act and is required to comply with its provisions and the regulations issued thereunder. (Some examples of covered charitable or non-profit organizations would be disaster relief organizations, philanthropic organizations, trade associations, private educational institutions, labor organizations, and private hospitals.)

(c) *Coverage of churches and special policy as to certain church activities*—(1) *Churches*. Churches or religious organizations, like charitable and nonprofit organizations, are considered employers under the Act where they employ one or more persons in secular activities. As a matter of enforcement policy, the performance of, or participation in, religious services (as distinguished from secular or proprietary activities whether for charitable or religion-related purposes) will be regarded as not constituting employment under the Act. Any person, while performing religious services or participating in them in any degree is not regarded as an employer or employee under the Act, notwithstanding the fact that such person may be regarded as an employer or employee for other purposes—for example, giving or receiving remuneration in connection with the performance of religious services.

(2) *Examples*. Some examples of coverage of religious organizations as employers would be: A private hospital owned or operated by a religious organization; a private school or orphanage owned or operated by a religious organization; commercial establishments of religious organizations engaged in producing or selling products such as alcoholic beverages, bakery goods, religious goods, etc.; and administrative, executive, and other office personnel employed by religious organizations. Some examples of noncoverage in the case of religious organizations would be: Clergymen while performing or participating in religious services; and other participants in religious services; namely, choir masters, organists, other musicians, choir members, ushers, and the like.

§ 1975.5 States and political subdivisions thereof.

(a) *General*. The definition of the term ''employer'' in section 3(5) of the Act excludes the United States and States and political subdivisions of a State:

> (5) The term ''employer'' means a person engaged in a business affecting commerce who has employees, but does not include the United States or any State or political subdivision of a State.

The term ''State'' is defined as follows in section 3(7) of the Act:

> (7) The term ''State'' includes a State of the United States, the District of Columbia, Puerto Rico, the Virgin Islands, American Samoa, Guam, and the Trust Territory of the Pacific Islands.

Since States, as defined in section 3(7) of the Act, and political subdivisions thereof are not regarded as employers under section 3(5) of the Act, they would not be covered as employers under the Act, except to the extent that section 18(c)(6), and the pertinent regulations thereunder, require as a condition of approval by the Secretary of Labor of a State plan that such plan:

> (6) Contain[s] satisfactory assurances that such State will, to the extent permitted by its law, establish and maintain an effective and comprehensive occupational safety and health program applicable to all employees of public agencies of the State and its political subdivisions, which program is as effective as the standards contained in an approved plan.

(b) *Tests*. Any entity which has been (1) created directly by the State, so as to constitute a department or administrative arm of the government, or (2) administered by individuals who are controlled by public officials and responsible to such officials or to the general electorate, shall be deemed to be a ''State or political subdivision thereof'' under section 3(5) of the Act and, therefore, not within the definition of employer, and, consequently, not subject to the Act as an employer.

(c) *Factors for meeting the tests*. Various factors will be taken into consideration in determining whether an entity meets the test discussed above. Some examples of these factors are:

Are the individuals who administer the entity appointed by a public official or elected by the general electorate?

What are the terms and conditions of the appointment?

Who may dismiss such individuals and under what procedures?

What is the financial source of the salary of these individuals?

Does the entity earn a profit? Are such profits treated as revenue?

How are the entity's functions financed? What are the powers of the entity and are they usually characteristic of a government rather than a private instrumentality like the power of eminent domain?

How is the entity regarded under State and local law as well as under other Federal laws?

Is the entity exempted from State and local tax laws?

Are the entity's bonds, if any, tax-exempt? As to the entity's employees, are they regarded like employees of other State and political subdivisions?

What is the financial source of the employee-payroll?

How do employee fringe benefits, rights, obligations, and restrictions of the entity's employees compare to those of the employees of other State and local departments and agencies?

In evaluating these factors, due regard will be given to whether any occupational safety and health program exists to protect the entity's employees.

(d) *Weight of the factors.* The above list of factors is not exhaustive and no factor, isolated from the particular facts of a case, is assigned any particular weight for the purpose of a determination by the Secretary of Labor as to whether a given entity is a ''State or political subdivision of a State'' and, as such, not subject to the Act as an ''employer''. Each case must be viewed on its merits; and whether a single factor will be decisive, or whether the factors must be viewed in their relationship to each other as part of a sum total, also depends on the merits of each case.

(e) *Examples.* (1) The following types of entities would normally be regarded as not being employers under section 3(5) of the Act: the State Department of Labor and Industry; the State Highway and Motor Vehicle Department; State, county, and municipal law enforcement agencies as well as penal institutions; State, county, and municipal judicial bodies; State University Boards of Trustees; State, county, and municipal public school boards and commissions; and public libraries.

(2) Depending on the facts in the particular situation, the following types of entities would probably be excluded as employers under section 3(5) of the Act: harbor districts, irrigation districts, port authorities, bi-State authorities over bridges, highways, rivers, harbors, etc.; municipal transit entities; and State, county, and local hospitals and related institutions.

(3) The following examples are of entities which would normally not be regarded as a ''State or political subdivision of a State'', but unusual factors to the contrary in a particular case may indicate otherwise: Public utility companies, merely regulated by State or local bodies; businesses, such as alcoholic beverage distributors, licensed under State or local law; other business entities which under agreement perform certain functions for the State, such as gasoline stations conducting automobile inspections for State and county governments.

§ 1975.6 Policy as to domestic household employment activities in private residences.

As a matter of policy, individuals who, in their own residences, privately employ persons for the purpose of performing for the benefit of such individuals what are commonly regarded as ordinary domestic household tasks, such as house cleaning, cooking, and caring for children, shall not be subject to the requirements of the Act with respect to such employment.

PART 1977—DISCRIMINATION AGAINST EMPLOYEES EXERCISING RIGHTS UNDER THE WILLIAMS-STEIGER OCCUPATIONAL SAFETY AND HEALTH ACT OF 1970

GENERAL

Sec.
1977.1 Introductory statement.
1977.2 Purpose of this part.
1977.3 General requirements of section 11(c) of the Act.
1977.4 Persons prohibited from discriminating.
1977.5 Persons protected by section 11(c).

1977.6 Unprotected activities distinguished.

SPECIFIC PROTECTIONS

1977.9 Complaints under or related to the Act.
1977.10 Proceedings under or related to the Act.
1977.11 Testimony.
1977.12 Exercise of any right afforded by the Act.

PROCEDURES

1977.15 Filing of complaint for discrimination.
1977.16 Notification of Secretary of Labor's determination.
1977.17 Withdrawal of complaint.
1977.18 Arbitration or other agency proceedings.

SOME SPECIFIC SUBJECTS

1977.22 Employee refusal to comply with safety rules.
1977.23 State plans.

AUTHORITY: Secs. 8, 11, Occupational Safety and Health Act of 1970 (29 U.S.C. 657, 660); Secretary of Labor's Order No. 12–71 (36 FR 8754).

SOURCE: 38 FR 2681, Jan. 29, 1973, unless otherwise noted.

GENERAL

§ 1977.1 Introductory statement.

(a) The Occupational Safety and Health Act of 1970 (29 U.S.C. 651, *et seq.*), hereinafter referred to as the Act, is a Federal statute of general application designed to regulate employment conditions relating to occupational safety and health and to achieve safer and healthier workplaces throughout the Nation. By terms of the Act, every person engaged in a business affecting commerce who has employees is required to furnish each of his employees employment and a place of employment free from recognized hazards that are causing or likely to cause death or serious physical harm, and, further, to comply with occupational safety and health standards promulgated under the Act. See part 1975 of this chapter concerning coverage of the Act.

(b) The Act provides, among other things, for the adoption of occupational safety and health standards, research and development activities, inspections and investigations of workplaces, and recordkeeping requirements. Enforcement procedures initiated by the Department of Labor, review proceedings before an independent quasi-judicial agency (the Occupational Safety and Health Review Commission), and express judicial review are provided by the Act. In addition, States which desire to assume responsibility for development and enforcement of standards which are at least as effective as the Federal standards published in this chapter may submit plans for such development and enforcement of the Secretary of Labor.

(c) Employees and representatives of employees are afforded a wide range of substantive and procedural rights under the Act. Moreover, effective implementation of the Act and achievement of its goals depend in large part upon the active but orderly participation of employees, individually and through their representatives, at every level of safety and health activity.

(d) This part deals essentially with the rights of employees afforded under section 11(c) of the Act. Section 11(c) of the Act prohibits reprisals, in any form, against employees who exercise rights under the Act.

§ 1977.2 Purpose of this part.

The purpose of this part is to make available in one place interpretations of the various provisions of section 11(c) of the Act which will guide the Secretary of Labor in the performance of his duties thereunder unless and until otherwise directed by authoritative decisions of the courts, or concluding, upon reexamination of an interpretation, that it is incorrect.

§ 1977.3 General requirements of section 11(c) of the Act.

Section 11(c) provides in general that no person shall discharge or in any manner discriminate against any employee because the employee has:

(a) Filed any complaint under or related to the Act;

(b) Instituted or caused to be instituted any proceeding under or related to the Act;

(c) Testified or is about to testify in any proceeding under the Act or related to the Act; or

(d) Exercised on his own behalf or on behalf of others any right afforded by the Act.

Any employee who believes that he has been discriminated against in violation of section 11(c) of the Act may, within 30 days after such violation occurs, lodge a complaint with the Secretary of Labor alleging such violation. The Secretary shall then cause appropriate investigation to be made. If, as a result of such investigation, the Secretary determines that the provisions of section 11(c) have been violated civil action may be instituted in any appropriate United States district court, to restrain violations of section 11(c)(1) and to obtain other appropriate relief, including rehiring or reinstatement of the employee to his former position with back pay. Section 11(c) further provides for notification of complainants by the Secretary of determinations made pursuant to their complaints.

§ 1977.4 Persons prohibited from discriminating.

Section 11(c) specifically states that ''no person shall discharge or in any manner discriminate against any employee'' because the employee has exercised rights under the Act. Section 3(4) of the Act defines ''person'' as ''one or more individuals, partnerships, associations, corporations, business trusts, legal representatives, or any group of persons.'' Consequently, the prohibitions of section 11(c) are not limited to actions taken by employers against their own employees. A person may be chargeable with discriminatory action against an employee of another person. Section 11(c) would extend to such entities as organizations representing employees for collective bargaining purposes, employment agencies, or any other person in a position to discriminate against an employee. See, *Meek* v. *United States*, 136 F. 2d 679 (6th Cir., 1943); *Bowe* v. *Judson C. Burns*, 137 F. 2d 37 (3rd Cir., 1943).

§ 1977.5 Persons protected by section 11(c).

(a) All employees are afforded the full protection of section 11(c). For purposes of the Act, an employee is defined as ''an employee of an employer who is employed in a business of his employer which affects commerce.'' The Act does not define the term ''employ.'' However, the broad remedial nature of this legislation demonstrates a clear congressional intent that the existence of an employment relationship, for purposes of section 11(c), is to be based upon economic realities rather than upon common law doctrines and concepts. See, *U.S.* v. *Silk*, 331 U.S. 704 (1947); *Rutherford Food Corporation* v. *McComb*, 331 U.S. 722 (1947).

(b) For purposes of section 11(c), even an applicant for employment could be considered an employee. See, *NLRB* v. *Lamar Creamery*, 246 F. 2d 8 (5th Cir., 1957). Further, because section 11(c) speaks in terms of any employee, it is also clear that the employee need not be an employee of the discriminator. The principal consideration would be whether the person alleging discrimination was an ''employee'' at the time of engaging in protected activity.

(c) In view of the definitions of ''employer'' and ''employee'' contained in the Act, employees of a State or political subdivision thereof would not ordinarily be within the contemplated coverage of section 11(c).

§ 1977.6 Unprotected activities distinguished.

(a) Actions taken by an employer, or others, which adversely affect an employee may be predicated upon nondiscriminatory grounds. The proscriptions of section 11(c) apply when the adverse action occurs because the employee has engaged in protected activities. An employee's engagement in activities protected by the Act does not automatically render him immune from discharge or discipline for legitimate reasons, or from adverse action dictated by non-prohibited considerations. See, *NLRB* v. *Dixie Motor Coach Corp.*, 128 F. 2d 201 (5th Cir., 1942).

(b) At the same time, to establish a violation of section 11(c), the employee's engagement in protected activity need not be the sole consideration behind discharge or other adverse action. If protected activity was a substantial reason for the action, or if the discharge or other adverse action would not have taken place ''but for'' engagement in protected activity, section 11(c) has been violated. See, *Mitchell* v. *Goodyear Tire & Rubber Co.*, 278 F. 2d 562

(8th Cir., 1960); *Goldberg* v. *Bama Manufacturing*, 302 F. 2d 152 (5th Cir., 1962). Ultimately, the issue as to whether a discharge was because of protected activity will have to be determined on the basis of the facts in the particular case.

SPECIFIC PROTECTIONS

§ 1977.9 Complaints under or related to the Act.

(a) Discharge of, or discrimination against, an employee because the employee has filed ''any complaint * * * under or related to this Act * * *'' is prohibited by section 11(c). An example of a complaint made ''under'' the Act would be an employee request for inspection pursuant to section 8(f). However, this would not be the only type of complaint protected by section 11(c). The range of complaints ''related to'' the Act is commensurate with the broad remedial purposes of this legislation and the sweeping scope of its application, which entails the full extent of the commerce power. (See Cong. Rec., vol. 116 p. P. 42206 Dec. 17, 1970).

(b) Complaints registered with other Federal agencies which have the authority to regulate or investigate occupational safety and health conditions are complaints ''related to'' this Act. Likewise, complaints made to State or local agencies regarding occupational safety and health conditions would be ''related to'' the Act. Such complaints, however, must relate to conditions at the workplace, as distinguished from complaints touching only upon general public safety and health.

(c) Further, the salutary principles of the Act would be seriously undermined if employees were discouraged from lodging complaints about occupational safety and health matters with their employers. (Section 2(1), (2), and (3)). Such complaints to employers, if made in good faith, therefore would be related to the Act, and an employee would be protected against discharge or discrimination caused by a complaint to the employer.

§ 1977.10 Proceedings under or related to the Act.

(a) Discharge of, or discrimination against, any employee because the employee has ''instituted or caused to be instituted any proceeding under or related to this Act'' is also prohibited by section 11(c). Examples of proceedings which could arise specifically under the Act would be inspections of worksites under section 8 of the Act, employee contest of abatement date under section 10(c) of the Act, employee initiation of proceedings for promulgation of an occupational safety and health standard under section 6(b) of the Act and part 1911 of this chapter, employee application for modification of revocation of a variance under section 6(d) of the Act and part 1905 of this chapter, employee judicial challenge to a standard under section 6(f) of the Act and employee appeal of an Occupational Safety and Health Review Commission order under section 11(a) of the Act. In determining whether a ''proceeding'' is ''related to'' the Act, the considerations discussed in § 1977.9 would also be applicable.

(b) An employee need not himself directly institute the proceedings. It is sufficient if he sets into motion activities of others which result in proceedings under or related to the Act.

§ 1977.11 Testimony.

Discharge of, or discrimination against, any employee because the employee ''has testified or is about to testify'' in proceedings under or related to the Act is also prohibited by section 11(c). This protection would of course not be limited to testimony in proceedings instituted or caused to be instituted by the employee, but would extend to any statements given in the course of judicial, quasi-judicial, and administrative proceedings, including inspections, investigations, and administrative rule making or adjudicative functions. If the employee is giving or is about to give testimony in any proceeding under or related to the Act, he would be protected against discrimination resulting from such testimony.

§ 1977.12 Exercise of any right afforded by the Act.

(a) In addition to protecting employees who file complaints, institute proceedings, or testify in proceedings under or related to the Act, section

11(c) also protects employees from discrimination occurring because of the exercise ''of any right afforded by this Act.'' Certain rights are explicitly provided in the Act; for example, there is a right to participate as a party in enforcement proceedings (section 10). Certain other rights exist by necessary implication. For example, employees may request information from the Occupational Safety and Health Administration; such requests would constitute the exercise of a right afforded by the Act. Likewise, employees interviewed by agents of the Secretary in the course of inspections or investigations could not subsequently be discriminated against because of their cooperation.

(b)(1) On the other hand, review of the Act and examination of the legislative history discloses that, as a general matter, there is no right afforded by the Act which would entitle employees to walk off the job because of potential unsafe conditions at the workplace. Hazardous conditions which may be violative of the Act will ordinarily be corrected by the employer, once brought to his attention. If corrections are not accomplished, or if there is dispute about the existence of a hazard, the employee will normally have opportunity to request inspection of the workplace pursuant to section 8(f) of the Act, or to seek the assistance of other public agencies which have responsibility in the field of safety and health. Under such circumstances, therefore, an employer would not ordinarily be in violation of section 11(c) by taking action to discipline an employee for refusing to perform normal job activities because of alleged safety or health hazards.

(2) However, occasions might arise when an employee is confronted with a choice between not performing assigned tasks or subjecting himself to serious injury or death arising from a hazardous condition at the workplace. If the employee, with no reasonable alternative, refuses in good faith to expose himself to the dangerous condition, he would be protected against subsequent discrimination. The condition causing the employee's apprehension of death or injury must be of such a nature that a reasonable person, under the circumstances then confronting the employee, would conclude that there is a real danger of death or serious injury and that there is insufficient time, due to the urgency of the situation, to eliminate the danger through resort to regular statutory enforcement channels. In addition, in such circumstances, the employee, where possible, must also have sought from his employer, and been unable to obtain, a correction of the dangerous condition.

[38 FR 2681, Jan. 29, 1973, as amended at 38 FR 4577, Feb. 16, 1973]

PROCEDURES

§ 1977.15 Filing of complaint for discrimination.

(a) *Who may file.* A complaint of section 11(c) discrimination may be filed by the employee himself, or by a representative authorized to do so on his behalf.

(b) *Nature of filing.* No particular form of complaint is required.

(c) *Place of filing.* Complaint should be filed with the Area Director (Occupational Safety and Health Administration) responsible for enforcement activities in the geographical area where the employee resides or was employed.

(d) *Time for filing.* (1) Section 11(c)(2) provides that an employee who believes that he has been discriminated against in violation of section 11(c)(1) ''may, within 30 days after such violation occurs,'' file a complaint with the Secretary of Labor.

(2) A major purpose of the 30-day period in this provision is to allow the Secretary to decline to entertain complaints which have become stale. Accordingly, complaints not filed within 30 days of an alleged violation will ordinarily be presumed to be untimely.

(3) However, there may be circumstances which would justify tolling of the 30-day period on recognized equitable principles or because of strongly extenuating circumstances, e.g., where the employer has concealed, or misled the employee regarding the grounds for discharge or other adverse action; or where the discrimination is in the nature of a continuing violation. The

pendency of grievance-arbitration proceedings or filing with another agency, among others, are circumstances which do not justify tolling the 30-day period. In the absence of circumstances justifying a tolling of the 30-day period, untimely complaints will not be processed.

[38 FR 2681, Jan. 29, 1973, as amended at 50 FR 32846, Aug. 15, 1985]

§ 1977.16 Notification of Secretary of Labor's determination.

Section 11(c)(3) provides that the Secretary is to notify a complainant within 90 days of the complaint of his determination whether prohibited discrimination has occurred. This 90-day provision is considered directory in nature. While every effort will be made to notify complainants of the Secretary's determination within 90 days, there may be instances when it is not possible to meet the directory period set forth in section 11(c)(3).

§ 1977.17 Withdrawal of complaint.

Enforcement of the provisions of section 11(c) is not only a matter of protecting rights of individual employees, but also of public interest. Attempts by an employee to withdraw a previously filed complaint will not necessarily result in termination of the Secretary's investigation. The Secretary's jurisdiction cannot be foreclosed as a matter of law by unilateral action of the employee. However, a voluntary and uncoerced request from a complainant to withdraw his complaint will be given careful consideration and substantial weight as a matter of policy and sound enforcement procedure.

§ 1977.18 Arbitration or other agency proceedings.

(a) *General.* (1) An employee who files a complaint under section 11(c) of the Act may also pursue remedies under grievance arbitration proceedings in collective bargaining agreements. In addition, the complainant may concurrently resort to other agencies for relief, such as the National Labor Relations Board. The Secretary's jurisdiction to entertain section 11(c) complaints, to investigate, and to determine whether discrimination has occurred, is independent of the jurisdiction of other agencies or bodies. The Secretary may file action in U.S. district court regardless of the pendency of other proceedings.

(2) However, the Secretary also recognizes the national policy favoring voluntary resolution of disputes under procedures in collective bargaining agreements. See, e.g., *Boy's Markets, Inc.* v. *Retail Clerks*, 398 U.S. 235 (1970); *Republic Steel Corp.* v. *Maddox*, 379 U.S. 650 (1965); *Carey* v. *Westinghouse Electric Co.*, 375 U.S. 261 (1964); Collier Insulated Wire, 192 NLRB No. 150 (1971). By the same token, due deference should be paid to the jurisdiction of other forums established to resolve disputes which may also be related to section 11(c) complaints.

(3) Where a complainant is in fact pursuing remedies other than those provided by section 11(c), postponement of the Secretary's determination and deferral to the results of such proceedings may be in order. See, *Burlington Truck Lines, Inc.*, v. *U.S.*, 371 U.S. 156 (1962).

(b) *Postponement of determination.* Postponement of determination would be justified where the rights asserted in other proceedings are substantially the same as rights under section 11(c) and those proceedings are not likely to violate the rights guaranteed by section 11(c). The factual issues in such proceedings must be substantially the same as those raised by section 11(c) complaint, and the forum hearing the matter must have the power to determine the ultimate issue of discrimination. See *Rios* v. *Reynolds Metals Co.*, F.2d (5th Cir., 1972), 41 U.S.L.W. 1049 (Oct. 10, 1972); *Newman* v. *Avco Corp.*, 451 F.2d 743 (6th Cir., 1971).

(c) *Deferral to outcome of other proceedings.* A determination to defer to the outcome of other proceedings initiated by a complainant must necessarily be made on a case-to-case basis, after careful scrutiny of all available information. Before deferring to the results of other proceedings, it must be clear that those proceedings dealt adequately with all factual issues, that the proceedings were fair, regular, and free of procedural infirmities, and that the outcome of the proceedings was not repugnant to the purpose and policy of the Act. In this

regard, if such other actions initiated by a complainant are dismissed without adjudicatory hearing thereof, such dismissal will not ordinarily be regarded as determinative of the section 11(c) complaint.

SOME SPECIFIC SUBJECTS

§ 1977.22 Employee refusal to comply with safety rules.

Employees who refuse to comply with occupational safety and health standards or valid safety rules implemented by the employer in furtherance of the Act are not exercising any rights afforded by the Act. Disciplinary measures taken by employers solely in response to employee refusal to comply with appropriate safety rules and regulations, will not ordinarily be regarded as discriminatory action prohibited by section 11(c). This situation should be distinguished from refusals to work, as discussed in § 1977.12.

§ 1977.23 State plans.

A State which is implementing its own occupational safety and health enforcement program pursuant to section 18 of the Act and parts 1902 and 1952 of this chapter must have provisions as effective as those of section 11(c) to protect employees from discharge or discrimination. Such provisions do not divest either the Secretary of Labor or Federal district courts of jurisdiction over employee complaints of discrimination. However, the Secretary of Labor may refer complaints of employees adequately protected by State Plans' provisions to the appropriate state agency. The basic principles outlined in § 1977.18, supra will be observed as to deferrals to findings of state agencies.

PART 1978—PROCEDURES FOR THE HANDLING OF RETALIATION COMPLAINTS UNDER THE EMPLOYEE PROTECTION PROVISION OF THE SURFACE TRANSPORTATION ASSISTANCE ACT OF 1982 (STAA), AS AMENDED

Subpart A—Complaints, Investigations, Findings, and Preliminary Orders

Sec.
1978.100 Purpose and scope.
1978.101 Definitions.
1978.102 Obligations and prohibited acts.
1978.103 Filing of retaliation complaints.
1978.104 Investigation.
1978.105 Issuance of findings and preliminary orders.

Subpart B—Litigation

1978.106 Objections to the findings and the preliminary order and request for a hearing.
1978.107 Hearings.
1978.108 Role of Federal agencies.
1978.109 Decisions and orders of the administrative law judge.
1978.110 Decisions and orders of the Administrative Review Board.

Subpart C—Miscellaneous Provisions

1978.111 Withdrawal of STAA complaints, findings, objections, and petitions for review; settlement.
1978.112 Judicial review.
1978.113 Judicial enforcement.
1978.114 District court jurisdiction of retaliation complaints under STAA.
1978.115 Special circumstances; waiver of rules.

AUTHORITY: 49 U.S.C. 31101 and 31105; Secretary's Order 1–2012 (Jan. 18, 2012), 77 FR 3912 (Jan. 25, 2012); Secretary's Order 1–2010 (Jan. 15, 2010), 75 FR 3924 (Jan. 25, 2010).

SOURCE: 77 FR 44134, July 27, 2012, unless otherwise noted.

Subpart A—Complaints, Investigations, Findings, and Preliminary Orders

§ 1978.100 Purpose and scope.

(a) This part sets forth, the procedures for, and interpretations of, the employee protection (whistleblower) provision of the Surface Transportation Assistance Act of 1982 (STAA),

49 U.S.C. 31105, as amended, which protects employees from retaliation because the employee has engaged in, or is perceived to have engaged in, protected activity pertaining to commercial motor vehicle safety, health, or security matters.

(b) This part establishes procedures under STAA for the expeditious handling of retaliation complaints filed by employees, or by persons acting on their behalf. These rules, together with those rules codified at 29 CFR part 18, set forth the procedures for submission of complaints, investigations, issuance of findings and preliminary orders, objections to findings and orders, litigation before administrative law judges (ALJs), post-hearing administrative review, and withdrawals and settlements. This part also sets forth interpretations of STAA.

§ 1978.101 Definitions.

(a) *Act* means the Surface Transportation Assistance Act of 1982 (STAA), as amended.

(b) *Assistant Secretary* means the Assistant Secretary of Labor for Occupational Safety and Health or the person or persons to whom he or she delegates authority under the Act.

(c) *Business days* means days other than Saturdays, Sundays, and Federal holidays.

(d) *Commercial motor carrier* means any person engaged in a business affecting commerce between States or between a State and a place outside thereof who owns or leases a commercial motor vehicle in connection with that business, or assigns employees to operate such a vehicle.

(e) *Commercial motor vehicle* means a vehicle as defined by 49 U.S.C. 31101(1).

(f) *Complainant* means the employee who filed a STAA complaint or on whose behalf a complaint was filed.

(g) *Complaint*, for purposes of § 1978.102(b)(1) and (e)(1), includes both written and oral complaints to employers, government agencies, and others.

(h) *Employee* means a driver of a commercial motor vehicle (including an independent contractor when personally operating a commercial motor vehicle), a mechanic, a freight handler, or an individual not an employer, who:

(1) Directly affects commercial motor vehicle safety or security in the course of employment by a commercial motor carrier; and

(2) Is not an employee of the United States Government, a State, or a political subdivision of a State acting in the course of employment.

(3) The term includes an individual formerly performing the work described above or an applicant for such work.

(i) *Employer* means a person engaged in a business affecting commerce that owns or leases a commercial motor vehicle in connection with that business, or assigns an employee to operate the vehicle in commerce, but does not include the Government, a State, or a political subdivision of a State.

(j) *OSHA* means the Occupational Safety and Health Administration of the United States Department of Labor.

(k) *Person* means one or more individuals, partnerships, associations, corporations, business trusts, legal representatives, or any other organized group of individuals.

(l) *Respondent* means the person alleged to have violated 49 U.S.C. 31105.

(m) *Secretary* means the Secretary of Labor or persons to whom authority under the Act has been delegated.

(n) *State* means a State of the United States, the District of Columbia, Puerto Rico, the Virgin Islands, American Samoa, Guam, and the Northern Mariana Islands.

(o) Any future statutory amendments that affect the definition of a term or terms listed in this section will apply in lieu of the definition stated herein.

§ 1978.102 Obligations and prohibited acts.

(a) No person may discharge or otherwise retaliate against any employee with respect to the employee's compensation, terms, conditions, or privileges of employment because the employee engaged in any of the activities specified in paragraphs (b) or (c) of this section. In addition, no person may discharge or otherwise retaliate against any employee with respect to the employee's compensation, terms, conditions, or privileges of employment because a person acting pursuant to the

employee's request engaged in any of the activities specified in paragraph (b).

(b) It is a violation for any person to intimidate, threaten, restrain, coerce, blacklist, discharge, discipline, harass, suspend, demote, or in any other manner retaliate against any employee because the employee or a person acting pursuant to the employee's request has:

(1) Filed orally or in writing a complaint with an employer, government agency, or others or begun a proceeding related to a violation of a commercial motor vehicle safety or security regulation, standard, or order; or

(2) Testified or will testify at any proceeding related to a violation of a commercial motor vehicle safety or security regulation, standard, or order.

(c) It is a violation for any person to intimidate, threaten, restrain, coerce, blacklist, discharge, discipline, harass, suspend, demote, or in any other manner retaliate against any employee because the employee:

(1) Refuses to operate a vehicle because:

(i) The operation violates a regulation, standard, or order of the United States related to commercial motor vehicle safety, health, or security; or

(ii) He or she has a reasonable apprehension of serious injury to himself or herself or the public because of the vehicle's hazardous safety or security condition;

(2) Accurately reports hours on duty pursuant to Chapter 315 of Title 49 of the United States Code; or

(3) Cooperates with a safety or security investigation by the Secretary of Transportation, the Secretary of Homeland Security, or the National Transportation Safety Board; or

(4) Furnishes information to the Secretary of Transportation, the Secretary of Homeland Security, the National Transportation Safety Board, or any Federal, State, or local regulatory or law enforcement agency as to the facts relating to any accident or incident resulting in injury or death to an individual or damage to property occurring in connection with commercial motor vehicle transportation.

(d) No person may discharge or otherwise retaliate against any employee with respect to the employee's compensation, terms, conditions, or privileges of employment because the person perceives that the employee has engaged in any of the activities specified in paragraph (e) of this section.

(e) It is a violation for any person to intimidate, threaten, restrain, coerce, blacklist, discharge, discipline, harass, suspend, demote, or in any other manner retaliate against any employee because the employer perceives that:

(1) The employee has filed orally or in writing or is about to file orally or in writing a complaint with an employer, government agency, or others or has begun or is about to begin a proceeding related to a violation of a commercial motor vehicle safety or security regulation, standard or order;

(2) The employee is about to cooperate with a safety or security investigation by the Secretary of Transportation, the Secretary of Homeland Security, or the National Transportation Safety Board; or

(3) The employee has furnished or is about to furnish information to the Secretary of Transportation, the Secretary of Homeland Security, the National Transportation Safety Board, or any Federal, State, or local regulatory or law enforcement agency as to the facts relating to any accident or incident resulting in injury or death to an individual or damage to property occurring in connection with commercial motor vehicle transportation.

(f) For purposes of this section, an employee's apprehension of serious injury is reasonable only if a reasonable individual in the circumstances then confronting the employee would conclude that the hazardous safety or security condition establishes a real danger of accident, injury or serious impairment to health. To qualify for protection, the employee must have sought from the employer, and been unable to obtain, correction of the hazardous safety or security condition.

§ 1978.103 Filing of retaliation complaints.

(a) *Who may file.* An employee who believes that he or she has been retaliated against by an employer in violation of STAA may file, or have filed by

any person on the employee's behalf, a complaint alleging such retaliation.

(b) *Nature of filing.* No particular form of complaint is required. A complaint may be filed orally or in writing. Oral complaints will be reduced to writing by OSHA. If the complainant is unable to file a complaint in English, OSHA will accept the complaint in any other language.

(c) *Place of filing.* The complaint should be filed with the OSHA office responsible for enforcement activities in the geographical area where the employee resides or was employed, but may be filed with any OSHA officer or employee. Addresses and telephone numbers for these officials are set forth in local directories and at the following Internet address: *http://www.osha.gov.*

(d) *Time for filing.* Within 180 days after an alleged violation of STAA occurs, any employee who believes that he or she has been retaliated against in violation of STAA may file, or have filed by any person on the employee's behalf, a complaint alleging such retaliation. The date of the postmark, facsimile transmittal, electronic communication transmittal, telephone call, hand-delivery, delivery to a third-party commercial carrier, or in-person filing at an OSHA office will be considered the date of filing. The time for filing a complaint may be tolled for reasons warranted by applicable case law.

(e) *Relationship to section 11(c) complaints.* A complaint filed under STAA alleging facts that would also constitute a violation of section 11(c) of the Occupational Safety and Health Act, 29 U.S.C. 660(c), will be deemed to be a complaint under both STAA and section 11(c). Similarly, a complaint filed under section 11(c) that alleges facts that would also constitute a violation of STAA will be deemed to be a complaint filed under both STAA and section 11(c). Normal procedures and timeliness requirements under the respective statutes and regulations will be followed.

§ 1978.104 Investigation.

(a) Upon receipt of a complaint in the investigating office, the Assistant Secretary will notify the respondent of the filing of the complaint by providing the respondent with a copy of the complaint, redacted in accordance with the Privacy Act of 1974, 5 U.S.C. 552a and other applicable confidentiality laws. The Assistant Secretary will also notify the respondent of the respondent's rights under paragraphs (b) and (f) of this section. The Assistant Secretary will provide a copy of the unredacted complaint to the complainant (or complainant's legal counsel, if complainant is represented by counsel) and to the Federal Motor Carrier Safety Administration.

(b) Within 20 days of receipt of the notice of the filing of the complaint provided under paragraph (a) of this section, the respondent may submit to the Assistant Secretary a written statement and any affidavits or documents substantiating its position. Within the same 20 days, the respondent may request a meeting with the Assistant Secretary to present its position.

(c) Throughout the investigation, the agency will provide to the complainant (or the complainant's legal counsel, if complainant is represented by counsel) a copy of all of respondent's submissions to the agency that are responsive to the complainant's whistleblower complaint. Before providing such materials to the complainant, the agency will redact them, if necessary, in accordance with the Privacy Act of 1974, 5 U.S.C. 552a, and other applicable confidentiality laws. The agency will also provide the complainant with an opportunity to respond to such submissions.

(d) Investigations will be conducted in a manner that protects the confidentiality of any person who provides information on a confidential basis, other than the complainant, in accordance with part 70 of this title.

(e)(1) A complaint will be dismissed unless the complainant has made a prima facie showing that protected activity was a contributing factor in the adverse action alleged in the complaint.

(2) The complaint, supplemented as appropriate by interviews of the complainant, must allege the existence of facts and evidence to make a prima facie showing as follows:

(i) The employee engaged in a protected activity, either actual activity or activity about to be undertaken;

(ii) The respondent knew or suspected, actually or constructively, that the employee engaged in the protected activity;

(iii) The employee suffered an adverse action; and

(iv) The circumstances were sufficient to raise the inference that the protected activity was a contributing factor in the adverse action.

(3) For purposes of determining whether to investigate, the complainant will be considered to have met the required burden if the complaint on its face, supplemented as appropriate through interviews of the complainant, alleges the existence of facts and either direct or circumstantial evidence to meet the required showing, *i.e.*, to give rise to an inference that the respondent knew or suspected that the employee engaged in protected activity and that the protected activity was a contributing factor in the adverse action. The burden may be satisfied, for example, if the complainant shows that the adverse action took place shortly after the protected activity, giving rise to the inference that it was a contributing factor in the adverse action. If the required showing has not been made, the complainant (or the complainant's legal counsel, if complainant is represented by counsel) will be so notified and the investigation will not commence.

(4) Notwithstanding a finding that a complainant has made a prima facie showing, as required by this section, an investigation of the complaint will not be conducted or will be discontinued if the respondent demonstrates by clear and convincing evidence that it would have taken the same adverse action in the absence of the complainant's protected activity.

(5) If the respondent fails to make a timely response or fails to satisfy the burden set forth in the prior paragraph, the Assistant Secretary will proceed with the investigation. The investigation will proceed whenever it is necessary or appropriate to confirm or verify the information provided by the respondent.

(f) Prior to the issuance of findings and a preliminary order as provided for in § 1978.105, if the Assistant Secretary has reasonable cause, on the basis of information gathered under the procedures of this part, to believe that the respondent has violated the Act and that preliminary reinstatement is warranted, the Assistant Secretary will again contact the respondent (or the respondent's legal counsel, if respondent is represented by counsel) to give notice of the substance of the relevant evidence supporting the complainant's allegations as developed during the course of the investigation. This evidence includes any witness statements, which will be redacted to protect the identity of confidential informants where statements were given in confidence; if the statements cannot be redacted without revealing the identity of confidential informants, summaries of their contents will be provided. The complainant will also receive a copy of the materials that must be provided to the respondent under this paragraph. Before providing such materials to the complainant, the agency will redact them, if necessary, in accordance with the Privacy Act of 1974, 5 U.S.C. 552a, and other applicable confidentiality laws. The respondent will be given the opportunity to submit a written response, to meet with the investigators, to present statements from witnesses in support of its position, and to present legal and factual arguments. The respondent must present this evidence within 10 business days of the Assistant Secretary's notification pursuant to this paragraph, or as soon thereafter as the Assistant Secretary and the respondent can agree, if the interests of justice so require.

§ 1978.105 Issuance of findings and preliminary orders.

(a) After considering all the relevant information collected during the investigation, the Assistant Secretary will issue, within 60 days of the filing of the complaint, written findings as to whether there is reasonable cause to believe that the respondent has retaliated against the complainant in violation of STAA.

(1) If the Assistant Secretary concludes that there is reasonable cause to

believe that a violation has occurred, the Assistant Secretary will accompany the findings with a preliminary order providing relief. Such order will require, where appropriate: affirmative action to abate the violation; reinstatement of the complainant to his or her former position, with the same compensation, terms, conditions and privileges of the complainant's employment; and payment of compensatory damages (backpay with interest and compensation for any special damages sustained as a result of the retaliation, including any litigation costs, expert witness fees, and reasonable attorney fees which the complainant has incurred). Interest on backpay will be calculated using the interest rate applicable to underpayment of taxes under 26 U.S.C. 6621 and will be compounded daily. The preliminary order may also require the respondent to pay punitive damages up to $250,000.

(2) If the Assistant Secretary concludes that a violation has not occurred, the Assistant Secretary will notify the parties of that finding.

(b) The findings and, where appropriate, the preliminary order will be sent by certified mail, return receipt requested, to all parties of record (and each party's legal counsel if the party is represented by counsel). The findings and, where appropriate, the preliminary order will inform the parties of the right to object to the findings and/or the order and to request a hearing. The findings and, where appropriate, the preliminary order also will give the address of the Chief Administrative Law Judge, U.S. Department of Labor. At the same time, the Assistant Secretary will file with the Chief Administrative Law Judge a copy of the original complaint and a copy of the findings and/or order.

(c) The findings and the preliminary order will be effective 30 days after receipt by the respondent (or the respondent's legal counsel if the respondent is represented by counsel), or on the compliance date set forth in the preliminary order, whichever is later, unless an objection and request for a hearing have been timely filed as provided at § 1978.106. However, the portion of any preliminary order requiring reinstatement will be effective immediately upon the respondent's receipt of the findings and the preliminary order, regardless of any objections to the findings and/or the order.

Subpart B—Litigation

§ 1978.106 Objections to the findings and the preliminary order and request for a hearing.

(a) Any party who desires review, including judicial review, must file any objections and a request for a hearing on the record within 30 days of receipt of the findings and preliminary order pursuant to § 1978.105(c). The objections and request for a hearing must be in writing and state whether the objections are to the findings and/or the preliminary order. The date of the postmark, facsimile transmittal, or electronic communication transmittal is considered the date of filing; if the objection is filed in person, by hand-delivery or other means, the objection is filed upon receipt. Objections must be filed with the Chief Administrative Law Judge, U.S. Department of Labor, and copies of the objections must be mailed at the same time to the other parties of record and the OSHA official who issued the findings.

(b) If a timely objection is filed, all provisions of the preliminary order will be stayed, except for the portion requiring preliminary reinstatement, which will not be automatically stayed. The portion of the preliminary order requiring reinstatement will be effective immediately upon the respondent's receipt of the findings and preliminary order, regardless of any objections to the order. The respondent may file a motion with the Office of Administrative Law Judges for a stay of the Assistant Secretary's preliminary order of reinstatement, which shall be granted only based on exceptional circumstances. If no timely objection is filed with respect to either the findings or the preliminary order, the findings and/or the preliminary order will become the final decision of the Secretary, not subject to judicial review.

§ 1978.107 Hearings.

(a) Except as provided in this part, proceedings will be conducted in accordance with the rules of practice and procedure for administrative hearings before the Office of Administrative Law Judges, codified at subpart A of part 18 of this title.

(b) Upon receipt of an objection and request for hearing, the Chief Administrative Law Judge will promptly assign the case to an ALJ who will notify the parties, by certified mail, of the day, time, and place of hearing. The hearing is to commence expeditiously, except upon a showing of good cause or unless otherwise agreed to by the parties. Hearings will be conducted de novo on the record. Administrative law judges have broad discretion to limit discovery in order to expedite the hearing.

(c) If both the complainant and the respondent object to the findings and/or order, the objections will be consolidated and a single hearing will be conducted.

(d) Formal rules of evidence will not apply, but rules or principles designed to assure production of the most probative evidence will be applied. The ALJ may exclude evidence that is immaterial, irrelevant, or unduly repetitious.

§ 1978.108 Role of Federal agencies.

(a)(1) The complainant and the respondent will be parties in every proceeding. In any case in which the respondent objects to the findings or the preliminary order the Assistant Secretary ordinarily will be the prosecuting party. In any other cases, at the Assistant Secretary's discretion, the Assistant Secretary may participate as a party or participate as amicus curiae at any stage of the proceeding. This right to participate includes, but is not limited to, the right to petition for review of a decision of an ALJ, including a decision approving or rejecting a settlement agreement between the complainant and the respondent.

(2) If the Assistant Secretary assumes the role of prosecuting party in accordance with paragraph (a)(1) of this section, he or she may, upon written notice to the ALJ or the Administrative Review Board, as the case may be, and the other parties, withdraw as the prosecuting party in the exercise of prosecutorial discretion. If the Assistant Secretary withdraws, the complainant will become the prosecuting party and the ALJ or the Administrative Review Board, as the case may be, will issue appropriate orders to regulate the course of future proceedings.

(3) Copies of documents in all cases shall be sent to the parties or, if they are represented by counsel, to the latter. In cases in which the Assistant Secretary is a party, copies of documents shall be sent to the Regional Solicitor's Office representing the Assistant Secretary.

(b) The Federal Motor Carrier Safety Administration, if interested in a proceeding, may participate as amicus curiae at any time in the proceeding, at its discretion. At the request of the Federal Motor Carrier Safety Administration, copies of all documents in a case must be sent to that agency, whether or not that agency is participating in the proceeding.

§ 1978.109 Decisions and orders of the administrative law judge.

(a) The decision of the ALJ will contain appropriate findings, conclusions, and an order pertaining to the remedies provided in paragraph (d) of this section, as appropriate. A determination that a violation has occurred may be made only if the complainant has demonstrated by a preponderance of the evidence that protected activity was a contributing factor in the adverse action alleged in the complaint.

(b) If the complainant or the Assistant Secretary has satisfied the burden set forth in the prior paragraph, relief may not be ordered if the respondent demonstrates by clear and convincing evidence that it would have taken the same adverse action in the absence of any protected activity.

(c) Neither the Assistant Secretary's determination to dismiss a complaint without completing an investigation pursuant to § 1978.104(e) nor the Assistant Secretary's determination to proceed with an investigation is subject to review by the ALJ, and a complaint

may not be remanded for the completion of an investigation or for additional findings on the basis that a determination to dismiss was made in error. Rather, if there otherwise is jurisdiction, the ALJ will hear the case on the merits or dispose of the matter without a hearing if the facts and circumstances warrant.

(d)(1) If the ALJ concludes that the respondent has violated the law, the ALJ will issue an order that will require, where appropriate: affirmative action to abate the violation; reinstatement of the complainant to his or her former position with the same compensation, terms, conditions, and privileges of the complainant's employment; payment of compensatory damages (backpay with interest and compensation for any special damages sustained as a result of the retaliation, including any litigation costs, expert witness fees, and reasonable attorney fees which the complainant may have incurred); and payment of punitive damages up to $250,000. Interest on backpay will be calculated using the interest rate applicable to underpayment of taxes under 26 U.S.C. 6621 and will be compounded daily.

(2) If the ALJ determines that the respondent has not violated the law, an order will be issued denying the complaint.

(e) The decision will be served upon all parties to the proceeding, the Assistant Secretary, and the Associate Solicitor, Division of Occupational Safety and Health, U.S. Department of Labor. Any ALJ's decision requiring reinstatement or lifting an order of reinstatement by the Assistant Secretary will be effective immediately upon receipt of the decision by the respondent. For ALJ decisions issued on or after the effective date of the interim final rule, August 31, 2010, all other portions of the ALJ's order will be effective 14 days after the date of the decision unless a timely petition for review has been filed with the Administrative Review Board (ARB), U.S. Department of Labor. Any ALJ decision issued on or after the effective date of the interim final rule, August 31, 2010, will become the final order of the Secretary unless a petition for review is timely filed with the ARB and the ARB accepts the decision for review.

§ 1978.110 Decisions and orders of the Administrative Review Board.

(a) The Assistant Secretary or any other party desiring to seek review, including judicial review, of a decision of the ALJ must file a written petition for review with the ARB, which has been delegated the authority to act for the Secretary and issue final decisions under this part. The parties should identify in their petitions for review the legal conclusions or orders to which they object, or the objections may be deemed waived. A petition must be filed within 14 days of the date of the decision of the ALJ. The date of the postmark, facsimile transmittal, or electronic communication transmittal will be considered to be the date of filing; if the petition is filed in person, by hand-delivery or other means, the petition is considered filed upon receipt. The petition must be served on all parties and on the Chief Administrative Law Judge at the time it is filed with the ARB. Copies of the petition for review and all briefs must be served on the Assistant Secretary and, in cases in which the Assistant Secretary is a party, on the Associate Solicitor, Division of Occupational Safety and Health, U.S. Department of Labor.

(b) If a timely petition for review is filed pursuant to paragraph (a) of this section, the decision of the ALJ will become the final order of the Secretary unless the ARB, within 30 days of the filing of the petition, issues an order notifying the parties that the case has been accepted for review. If a case is accepted for review, the decision of the ALJ will be inoperative unless and until the ARB issues an order adopting the decision, except that any order of reinstatement will be effective while review is conducted by the ARB unless the ARB grants a motion by the respondent to stay that order based on exceptional circumstances. The ARB will specify the terms under which any briefs are to be filed. The ARB will review the factual determinations of the ALJ under the substantial evidence standard. If no timely petition for review is filed, or the ARB denies review, the decision of the ALJ will become

the final order of the Secretary. If no timely petition for review is filed, the resulting final order is not subject to judicial review.

(c) The final decision of the ARB will be issued within 120 days of the conclusion of the hearing, which will be deemed to be 14 days after the date of the decision of the ALJ, unless a motion for reconsideration has been filed with the ALJ in the interim. In such case, the conclusion of the hearing is the date the motion for reconsideration is ruled upon or 14 days after a new decision is issued. The ARB's final decision will be served upon all parties and the Chief Administrative Law Judge by mail. The final decision also will be served on the Assistant Secretary, and on the Associate Solicitor, Division of Occupational Safety and Health, U.S, Department of Labor, even if the Assistant Secretary is not a party.

(d) If the ARB concludes that the respondent has violated the law, the ARB will issue a final order providing relief to the complainant. The final order will require, where appropriate: affirmative action to abate the violation; reinstatement of the complainant to his or her former position with the same compensation, terms, conditions, and privileges of the complainant's employment; payment of compensatory damages (backpay with interest and compensation for any special damages sustained as a result of the retaliation, including any litigation costs, expert witness fees, and reasonable attorney fees the complainant may have incurred); and payment of punitive damages up to $250,000. Interest on backpay will be calculated using the interest rate applicable to underpayment of taxes under 26 U.S.C. 6621 and will be compounded daily.

(e) If the ARB determines that the respondent has not violated the law, an order will be issued denying the complaint.

(f) Paragraphs (a) and (b) of this section apply to all cases in which the decision of the ALJ was issued on or after August 31, 2010.

Subpart C—Miscellaneous Provisions

§ 1978.111 Withdrawal of STAA complaints, findings, objections, and petitions for review; settlement.

(a) At any time prior to the filing of objections to the Assistant Secretary's findings and/or preliminary order, a complainant may withdraw his or her complaint by notifying the Assistant Secretary, orally or in writing, of his or her withdrawal. The Assistant Secretary then will confirm in writing the complainant's desire to withdraw and determine whether to approve the withdrawal. The Assistant Secretary will notify the parties (and each party's legal counsel if the party is represented by counsel) of the approval of any withdrawal. If the complaint is withdrawn because of settlement, the settlement must be submitted for approval in accordance with paragraph (d) of this section. A complainant may not withdraw his or her complaint after the filing of objections to the Assistant Secretary's findings and/or preliminary order.

(b) The Assistant Secretary may withdraw the findings and/or preliminary order at any time before the expiration of the 30-day objection period described in § 1978.106, provided that no objection has been filed yet, and substitute new findings and/or a new preliminary order. The date of the receipt of the substituted findings or order will begin a new 30-day objection period.

(c) At any time before the Assistant Secretary's findings and/or preliminary order become final, a party may withdraw objections to the Assistant Secretary's findings and/or preliminary order by filing a written withdrawal with the ALJ. If a case is on review with the ARB, a party may withdraw a petition for review of an ALJ's decision at any time before that decision becomes final by filing a written withdrawal with the ARB. The ALJ or the ARB, as the case may be, will determine whether to approve the withdrawal of the objections or the petition for review. If the ALJ approves a request to withdraw objections to the Assistant Secretary's findings and/or order, and there are no other pending objections, the Assistant Secretary's

findings and/or order will become the final order of the Secretary. If the ARB approves a request to withdraw a petition for review of an ALJ decision, and there are no other pending petitions for review of that decision, the ALJ's decision will become the final order of the Secretary. If objections or a petition for review are withdrawn because of settlement, the settlement must be submitted for approval in accordance with paragraph (d) of this section.

(d)(1) *Investigative settlements.* At any time after the filing of a STAA complaint and before the findings and/or order are objected to or become a final order by operation of law, the case may be settled if the Assistant Secretary, the complainant, and the respondent agree to a settlement. The Assistant Secretary's approval of a settlement reached by the respondent and the complainant demonstrates the Assistant Secretary's consent and achieves the consent of all three parties.

(2) *Adjudicatory settlements.* At any time after the filing of objections to the Assistant Secretary's findings and/or order, the case may be settled if the participating parties agree to a settlement and the settlement is approved by the ALJ if the case is before the ALJ or by the ARB, if the ARB has accepted the case for review. A copy of the settlement will be filed with the ALJ or the ARB, as the case may be.

(e) Any settlement approved by the Assistant Secretary, the ALJ, or the ARB will constitute the final order of the Secretary and may be enforced in United States district court pursuant to 49 U.S.C. 31105(e).

§ 1978.112 Judicial review.

(a) Within 60 days after the issuance of a final order under §§ 1978.109 and 1978.110, any person adversely affected or aggrieved by the order may file a petition for review of the order in the United States Court of Appeals for the circuit in which the violation allegedly occurred or the circuit in which the person resided on the date of the violation.

(b) A final order is not subject to judicial review in any criminal or other civil proceeding.

(c) If a timely petition for review is filed, the record of a case, including the record of proceedings before the ALJ, will be transmitted by the ARB or the ALJ, as the case may be, to the appropriate court pursuant to the Federal Rules of Appellate Procedure and the local rules of such court.

§ 1978.113 Judicial enforcement.

Whenever any person has failed to comply with a preliminary order of reinstatement or a final order, including one approving a settlement agreement issued under STAA, the Secretary may file a civil action seeking enforcement of the order in the United States district court for the district in which the violation was found to have occurred.

§ 1978.114 District court jurisdiction of retaliation complaints under STAA.

(a) If there is no final order of the Secretary, 210 days have passed since the filing of the complaint, and there is no showing that there has been delay due to the bad faith of the complainant, the complainant may bring an action at law or equity for de novo review in the appropriate district court of the United States, which will have jurisdiction over such an action without regard to the amount in controversy. The action shall, at the request of either party to such action, be tried by the court with a jury.

(b) Within seven days after filing a complaint in federal court, a complainant must file with the Assistant Secretary, the ALJ, or the ARB, depending on where the proceeding is pending, a copy of the file-stamped complaint. A copy of the complaint also must be served on the OSHA official who issued the findings and/or preliminary order, the Assistant Secretary, and the Associate Solicitor, Division of Occupational Safety and Health, U.S. Department of Labor.

§ 1978.115 Special circumstances; waiver of rules.

In special circumstances not contemplated by the provisions of these rules, or for good cause shown, the ALJ or the ARB on review may, upon application, after three days notice to all parties, waive any rule or issue such orders as justice or the administration of STAA requires.

PART 1979—PROCEDURES FOR THE HANDLING OF DISCRIMINATION COMPLAINTS UNDER SECTION 519 OF THE WENDELL H. FORD AVIATION INVESTMENT AND REFORM ACT FOR THE 21ST CENTURY

Subpart A—Complaints, Investigations, Findings and Preliminary Orders

Sec.
1979.100 Purpose and scope.
1979.101 Definitions.
1979.102 Obligations and prohibited acts.
1979.103 Filing of discrimination complaint.
1979.104 Investigation.
1979.105 Issuance of findings and preliminary orders.

Subpart B—Litigation

1979.106 Objections to the findings and the preliminary order and request for a hearing.
1979.107 Hearings.
1979.108 Role of Federal agencies.
1979.109 Decision and orders of the administrative law judge.
1979.110 Decision and orders of the Administrative Review Board.

Subpart C—Miscellaneous Provisions

1979.111 Withdrawal of complaints, objections, and findings; settlement.
1979.112 Judicial review.
1979.113 Judicial enforcement.
1979.114 Special circumstances; waiver of rules.

AUTHORITY: 49 U.S.C. 42121; Secretary of Labor's Order 5–2002, 67 FR 65008 (October 22, 2002).

SOURCE: 68 FR 14107, Mar. 21, 2003, unless otherwise noted.

Subpart A—Complaints, Investigations, Findings and Preliminary Orders

§ 1979.100 Purpose and scope.

(a) This part implements procedures under section 519 of the Wendell H. Ford Aviation Investment and Reform Act for the 21st Century, 49 U.S.C. 42121 (''AIR21''), which provides for employee protection from discrimination by air carriers or contractors or subcontractors of air carriers because the employee has engaged in protected activity pertaining to a violation or alleged violation of any order, regulation, or standard of the Federal Aviation Administration or any other provision of Federal law relating to air carrier safety.

(b) This part establishes procedures pursuant to AIR21 for the expeditious handling of discrimination complaints made by employees, or by persons acting on their behalf. These rules, together with those rules codified at 29 CFR part 18, set forth the procedures for submission of complaints under AIR21, investigations, issuance of findings and preliminary orders, objections to findings and orders, litigation before administrative law judges, post-hearing administrative review, and withdrawals and settlements.

§ 1979.101 Definitions.

Act or *AIR21* means section 519 of the Wendell H. Ford Aviation Investment and Reform Act for the 21st Century, Public Law 106–181, April 5, 2000, 49 U.S.C. 42121.

Air carrier means a citizen of the United States undertaking by any means, directly or indirectly, to provide air transportation.

Assistant Secretary means the Assistant Secretary of Labor for Occupational Safety and Health or the person or persons to whom he or she delegates authority under the Act.

Complainant means the employee who filed a complaint under the Act or on whose behalf a complaint was filed.

Contractor means a company that performs safety-sensitive functions by contract for an air carrier.

Employee means an individual presently or formerly working for an air carrier or contractor or subcontractor of an air carrier, an individual applying to work for an air carrier or contractor or subcontractor of an air carrier, or an individual whose employment could be affected by an air carrier or contractor or subcontractor of an air carrier.

Named person means the person alleged to have violated the Act.

OSHA means the Occupational Safety and Health Administration of the United States Department of Labor.

Person means one or more individuals, partnerships, associations, corporations, business trusts, legal representatives, or any group of persons.

Secretary means the Secretary of Labor or persons to whom authority under the Act has been delegated.

§ 1979.102 Obligations and prohibited acts.

(a) No air carrier or contractor or subcontractor of an air carrier may discharge any employee or otherwise discriminate against any employee with respect to the employee's compensation, terms, conditions, or privileges of employment because the employee, or any person acting pursuant to the employee's request, engaged in any of the activities specified in paragraphs (b)(1) through (4) of this section.

(b) It is a violation of the Act for any air carrier or contractor or subcontractor of an air carrier to intimidate, threaten, restrain, coerce, blacklist, discharge or in any other manner discriminate against any employee because the employee has:

(1) Provided, caused to be provided, or is about to provide (with any knowledge of the employer) or cause to be provided to the air carrier or contractor or subcontractor of an air carrier or the Federal Government, information relating to any violation or alleged violation of any order, regulation, or standard of the Federal Aviation Administration or any other provision of Federal law relating to air carrier safety under subtitle VII of title 49 of the United States Code or under any other law of the United States;

(2) Filed, caused to be filed, or is about to file (with any knowledge of the employer) or cause to be filed a proceeding relating to any violation or alleged violation of any order, regulation, or standard of the Federal Aviation Administration or any other provision of Federal law relating to air carrier safety under subtitle VII of title 49 of the United States Code, or under any other law of the United States;

(3) Testified or is about to testify in such a proceeding; or

(4) Assisted or participated or is about to assist or participate in such a proceeding.

(c) This part shall have no application to any employee of an air carrier, contractor, or subcontractor who, acting without direction from an air carrier, contractor, or subcontractor (or such person's agent) deliberately causes a violation of any requirement relating to air carrier safety under Subtitle VII Aviation Programs of Title 49 of the United States Code or any other law of the United States.

§ 1979.103 Filing of discrimination complaint.

(a) *Who may file.* An employee who believes that he or she has been discriminated against by an air carrier or contractor or subcontractor of an air carrier in violation of the Act may file, or have filed by any person on the employee's behalf, a complaint alleging such discrimination.

(b) *Nature of filing.* No particular form of complaint is required, except that a complaint must be in writing and should include a full statement of the acts and omissions, with pertinent dates, which are believed to constitute the violations.

(c) *Place of filing.* The complaint should be filed with the OSHA Area Director responsible for enforcement activities in the geographical area where the employee resides or was employed, but may be filed with any OSHA officer or employee. Addresses and telephone numbers for these officials are set forth in local directories and at the following Internet address: *http://www.osha.gov*.

(d) *Time for filing.* Within 90 days after an alleged violation of the Act occurs (*i.e.*, when the discriminatory decision has been both made and communicated to the complainant), an employee who believes that he or she has been discriminated against in violation of the Act may file, or have filed by any person on the employee's behalf, a complaint alleging such discrimination. The date of the postmark, facsimile transmittal, or e-mail communication will be considered to be the date of filing; if the complaint is filed in person, by hand-delivery, or other means, the complaint is filed upon receipt.

(e) *Relationship to section 11(c) complaints.* A complaint filed under AIR21 that alleges facts which would constitute a violation of section 11(c) of the Occupational Safety and Health

Act, 29 U.S.C. 660(c), shall be deemed to be a complaint filed under both AIR21 and section 11(c). Similarly, a complaint filed under section 11(c) that alleges facts that would constitute a violation of AIR21 shall be deemed to be a complaint filed under both AIR21 and section 11(c). Normal procedures and timeliness requirements for investigations under the respective laws and regulations will be followed.

§ 1979.104 Investigation.

(a) Upon receipt of a complaint in the investigating office, the Assistant Secretary will notify the named person of the filing of the complaint, of the allegations contained in the complaint, and of the substance of the evidence supporting the complaint (redacted to protect the identity of any confidential informants). The Assistant Secretary will also notify the named person of his or her rights under paragraphs (b) and (c) of this section and paragraph (e) of § 1979.110. A copy of the notice to the named person will also be provided to the Federal Aviation Administration.

(b) A complaint of alleged violation will be dismissed unless the complainant has made a prima facie showing that protected behavior or conduct was a contributing factor in the unfavorable personnel action alleged in the complaint.

(1) The complaint, supplemented as appropriate by interviews of the complainant, must allege the existence of facts and evidence to make a prima facie showing as follows:

(i) The employee engaged in a protected activity or conduct;

(ii) The named person knew or suspected, actually or constructively, that the employee engaged in the protected activity;

(iii) The employee suffered an unfavorable personnel action; and

(iv) The circumstances were sufficient to raise the inference that the protected activity was a contributing factor in the unfavorable action.

(2) For purposes of determining whether to investigate, the complainant will be considered to have met the required burden if the complaint on its face, supplemented as appropriate through interviews of the complainant, alleges the existence of facts and either direct or circumstantial evidence to meet the required showing, *i.e.*, to give rise to an inference that the named person knew or suspected that the employee engaged in protected activity and that the protected activity was a contributing factor in the unfavorable personnel action. Normally the burden is satisfied, for example, if the complaint shows that the adverse personnel action took place shortly after the protected activity, giving rise to the inference that it was a factor in the adverse action. If the required showing has not been made, the complainant will be so advised and the investigation will not commence.

(c) Notwithstanding a finding that a complainant has made a prima facie showing, as required by this section, an investigation of the complaint will not be conducted if the named person, pursuant to the procedures provided in this paragraph, demonstrates by clear and convincing evidence that it would have taken the same unfavorable personnel action in the absence of the complainant's protected behavior or conduct. Within 20 days of receipt of the notice of the filing of the complaint, the named person may submit to the Assistant Secretary a written statement and any affidavits or documents substantiating his or her position. Within the same 20 days the named person may request a meeting with the Assistant Secretary to present his or her position.

(d) If the named person fails to demonstrate by clear and convincing evidence that it would have taken the same unfavorable personnel action in the absence of the behavior protected by the Act, the Assistant Secretary will conduct an investigation. Investigations will be conducted in a manner that protects the confidentiality of any person who provides information on a confidential basis, other than the complainant, in accordance with 29 CFR part 70.

(e) Prior to the issuance of findings and a preliminary order as provided for in § 1979.105, if the Assistant Secretary has reasonable cause, on the basis of information gathered under the procedures of this part, to believe that the named person has violated the Act and

that preliminary reinstatement is warranted, the Assistant Secretary will again contact the named person to give notice of the substance of the relevant evidence supporting the complainant's allegations as developed during the course of the investigation. This evidence includes any witness statements, which will be redacted to protect the identity of confidential informants where statements were given in confidence; if the statements cannot be redacted without revealing the identity of confidential informants, summaries of their contents will be provided. The named person shall be given the opportunity to submit a written response, to meet with the investigators to present statements from witnesses in support of his or her position, and to present legal and factual arguments. The named person shall present this evidence within ten business days of the Assistant Secretary's notification pursuant to this paragraph, or as soon afterwards as the Assistant Secretary and the named person can agree, if the interests of justice so require.

§ 1979.105 Issuance of findings and preliminary orders.

(a) After considering all the relevant information collected during the investigation, the Assistant Secretary will issue, within 60 days of filing of the complaint, written findings as to whether or not there is reasonable cause to believe that the named person has discriminated against the complainant in violation of the Act.

(1) If the Assistant Secretary concludes that there is reasonable cause to believe that a violation has occurred, he or she will accompany the findings with a preliminary order providing relief to the complainant. The preliminary order will include, where appropriate, a requirement that the named person abate the violation; reinstatement of the complainant to his or her former position, together with the compensation (including back pay), terms, conditions and privileges of the complainant's employment; and payment of compensatory damages. Where the named person establishes that the complainant is a security risk (whether or not the information is obtained after the complainant's discharge), a preliminary order of reinstatement would not be appropriate. At the complainant's request the order shall also assess against the named person the complainant's costs and expenses (including attorney's and expert witness fees) reasonably incurred in connection with the filing of the complaint.

(2) If the Assistant Secretary concludes that a violation has not occurred, the Assistant Secretary will notify the parties of that finding.

(b) The findings and the preliminary order will be sent by certified mail, return receipt requested, to all parties of record. The letter accompanying the findings and order will inform the parties of their right to file objections and to request a hearing, and of the right of the named person to request attorney's fees from the administrative law judge, regardless of whether the named person has filed objections, if the named person alleges that the complaint was frivolous or brought in bad faith. The letter also will give the address of the Chief Administrative Law Judge. At the same time, the Assistant Secretary will file with the Chief Administrative Law Judge, U.S. Department of Labor, a copy of the original complaint and a copy of the findings and order.

(c) The findings and the preliminary order shall be effective 30 days after receipt by the named person pursuant to paragraph (b) of this section, unless an objection and a request for a hearing has been filed as provided at § 1979.106. However, the portion of any preliminary order requiring reinstatement shall be effective immediately upon receipt of the findings and preliminary order.

Subpart B—Litigation

§ 1979.106 Objections to the findings and the preliminary order and request for a hearing.

(a) Any party who desires review, including judicial review, of the findings and preliminary order, or a named person alleging that the complaint was frivolous or brought in bad faith who seeks an award of attorney's fees, must file any objections and/or a request for a hearing on the record within 30 days of receipt of the findings and preliminary order pursuant to paragraph (b) of

§ 1979.105. The objection or request for attorney's fees and request for a hearing must be in writing and state whether the objection is to the findings, the preliminary order, and/or whether there should be an award of attorney's fees. The date of the postmark, facsimile transmittal, or e-mail communication will be considered to be the date of filing; if the objection is filed in person, by hand-delivery or other means, the objection is filed upon receipt. Objections must be filed with the Chief Administrative Law Judge, U.S. Department of Labor, Washington, DC 20001, and copies of the objections must be mailed at the same time to the other parties of record, the OSHA official who issued the findings and order, and the Associate Solicitor, Division of Fair Labor Standards, U.S. Department of Labor, Washington, DC 20210.

(b)(1) If a timely objection is filed, all provisions of the preliminary order shall be stayed, except for the portion requiring preliminary reinstatement. The portion of the preliminary order requiring reinstatement shall be effective immediately upon the named person's receipt of the findings and preliminary order, regardless of any objections to the order.

(2) If no timely objection is filed with respect to either the findings or the preliminary order, the findings or preliminary order, as the case may be, shall become the final decision of the Secretary, not subject to judicial review.

§ 1979.107 Hearings.

(a) Except as provided in this part, proceedings will be conducted in accordance with the rules of practice and procedure for administrative hearings before the Office of Administrative Law Judges, codified at subpart A, of 29 CFR part 18.

(b) Upon receipt of an objection and request for hearing, the Chief Administrative Law Judge will promptly assign the case to a judge who will notify the parties, by certified mail, of the day, time, and place of hearing. The hearing is to commence expeditiously, except upon a showing of good cause or unless otherwise agreed to by the parties. Hearings will be conducted as hearings de novo, on the record. Administrative law judges shall have broad discretion to limit discovery in order to expedite the hearing.

(c) If both the complainant and the named person object to the findings and/or order, the objections will be consolidated and a single hearing will be conducted.

(d) Formal rules of evidence shall not apply, but rules or principles designed to assure production of the most probative evidence shall be applied. The administrative law judge may exclude evidence which is immaterial, irrelevant, or unduly repetitious.

§ 1979.108 Role of Federal agencies.

(a)(1) The complainant and the named person shall be parties in every proceeding. At the Assistant Secretary's discretion, the Assistant Secretary may participate as a party or may participate as amicus curiae at any time in the proceedings. This right to participate shall include, but is not limited to, the right to petition for review of a decision of an administrative law judge, including a decision based on a settlement agreement between complainant and the named person, to dismiss a complaint or to issue an order encompassing the terms of the settlement.

(2) Copies of pleadings in all cases, whether or not the Assistant Secretary is participating in the proceeding, must be sent to the Assistant Secretary, Occupational Safety and Health Administration, and to the Associate Solicitor, Division of Fair Labor Standards, U.S. Department of Labor, Washington, DC 20210.

(b) The FAA may participate as amicus curiae at any time in the proceedings, at the FAA's discretion. At the request of the FAA, copies of all pleadings in a case must be sent to the FAA, whether or not the FAA is participating in the proceeding.

§ 1979.109 Decision and orders of the administrative law judge.

(a) The decision of the administrative law judge will contain appropriate findings, conclusions, and an order pertaining to the remedies provided in paragraph (b) of this section, as appropriate. A determination that a violation has occurred may only be made if

the complainant has demonstrated that protected behavior or conduct was a contributing factor in the unfavorable personnel action alleged in the complaint. Relief may not be ordered if the named person demonstrates by clear and convincing evidence that it would have taken the same unfavorable personnel action in the absence of any protected behavior. Neither the Assistant Secretary's determination to dismiss a complaint without completing an investigation pursuant to § 1979.104(b) nor the Assistant Secretary's determination to proceed with an investigation is subject to review by the administrative law judge, and a complaint may not be remanded for the completion of an investigation or for additional findings on the basis that a determination to dismiss was made in error. Rather, if there otherwise is jurisdiction, the administrative law judge shall hear the case on the merits.

(b) If the administrative law judge concludes that the party charged has violated the law, the order shall direct the party charged to take appropriate affirmative action to abate the violation, including, where appropriate, reinstatement of the complainant to that person's former position, together with the compensation (including back pay), terms, conditions, and privileges of that employment, and compensatory damages. At the request of the complainant, the administrative law judge shall assess against the named person all costs and expenses (including attorney's and expert witness fees) reasonably incurred. If, upon the request of the named person, the administrative law judge determines that a complaint was frivolous or was brought in bad faith, the judge may award to the named person a reasonable attorney's fee, not exceeding $1,000.

(c) The decision will be served upon all parties to the proceeding. Any administrative law judge's decision requiring reinstatement or lifting an order of reinstatement by the Assistant Secretary shall be effective immediately upon receipt of the decision by the named person, and may not be stayed. All other portions of the judge's order shall be effective ten business days after the date of the decision unless a timely petition for review has been filed with the Administrative Review Board.

§ 1979.110 Decision and orders of the Administrative Review Board.

(a) Any party desiring to seek review, including judicial review, of a decision of the administrative law judge, or a named person alleging that the complaint was frivolous or brought in bad faith who seeks an award of attorney's fees, must file a written petition for review with the Administrative Review Board (''the Board''), which has been delegated the authority to act for the Secretary and issue final decisions under this part. The decision of the administrative law judge shall become the final order of the Secretary unless, pursuant to this section, a petition for review is timely filed with the Board. The petition for review must specifically identify the findings, conclusions or orders to which exception is taken. Any exception not specifically urged ordinarily shall be deemed to have been waived by the parties. To be effective, a petition must be filed within ten business days of the date of the decision of the administrative law judge. The date of the postmark, facsimile transmittal, or e-mail communication will be considered to be the date of filing; if the petition is filed in person, by hand-delivery or other means, the petition is considered filed upon receipt. The petition must be served on all parties and on the Chief Administrative Law Judge at the time it is filed with the Board. Copies of the petition for review and all briefs must be served on the Assistant Secretary, Occupational Safety and Health Administration, and on the Associate Solicitor, Division of Fair Labor Standards, U.S. Department of Labor, Washington, DC 20210.

(b) If a timely petition for review is filed pursuant to paragraph (a) of this section, the decision of the administrative law judge shall become the final order of the Secretary unless the Board, within 30 days of the filing of the petition, issues an order notifying the parties that the case has been accepted for review. If a case is accepted for review, the decision of the administrative law judge shall be inoperative unless and until the Board issues an order adopting the decision, except

that a preliminary order of reinstatement shall be effective while review is conducted by the Board. The Board will specify the terms under which any briefs are to be filed. The Board will review the factual determinations of the administrative law judge under the substantial evidence standard.

(c) The final decision of the Board shall be issued within 120 days of the conclusion of the hearing, which shall be deemed to be the conclusion of all proceedings before the administrative law judge—*i.e.*, ten business days after the date of the decision of the administrative law judge unless a motion for reconsideration has been filed with the administrative law judge in the interim. The decision will be served upon all parties and the Chief Administrative Law Judge by mail to the last known address. The final decision will also be served on the Assistant Secretary, Occupational Safety and Health Administration, and on the Associate Solicitor, Division of Fair Labor Standards, U.S. Department of Labor, Washington, DC 20210, even if the Assistant Secretary is not a party.

(d) If the Board concludes that the party charged has violated the law, the final order shall order the party charged to take appropriate affirmative action to abate the violation, including, where appropriate, reinstatement of the complainant to that person's former position, together with the compensation (including back pay), terms, conditions, and privileges of that employment, and compensatory damages. At the request of the complainant, the Board shall assess against the named person all costs and expenses (including attorney's and expert witness fees) reasonably incurred.

(e) If the Board determines that the named person has not violated the law, an order shall be issued denying the complaint. If, upon the request of the named person, the Board determines that a complaint was frivolous or was brought in bad faith, the Board may award to the named person a reasonable attorney's fee, not exceeding $1,000.

Subpart C—Miscellaneous Provisions

§ 1979.111 Withdrawal of complaints, objections, and findings; settlement.

(a) At any time prior to the filing of objections to the findings or preliminary order, a complainant may withdraw his or her complaint under the Act by filing a written withdrawal with the Assistant Secretary. The Assistant Secretary will then determine whether the withdrawal will be approved. The Assistant Secretary will notify the named person of the approval of any withdrawal. If the complaint is withdrawn because of settlement, the settlement shall be approved in accordance with paragraph (d) of this section.

(b) The Assistant Secretary may withdraw his or her findings or a preliminary order at any time before the expiration of the 30-day objection period described in § 1979.106, provided that no objection has yet been filed, and substitute new findings or preliminary order. The date of the receipt of the substituted findings or order will begin a new 30-day objection period.

(c) At any time before the findings or order become final, a party may withdraw his or her objections to the findings or order by filing a written withdrawal with the administrative law judge or, if the case is on review, with the Board. The judge or the Board, as the case may be, will determine whether the withdrawal will be approved. If the objections are withdrawn because of settlement, the settlement shall be approved in accordance with paragraph (d) of this section.

(d)(1) *Investigative settlements.* At any time after the filing of a complaint, and before the findings and/or order are objected to or become a final order by operation of law, the case may be settled if the Assistant Secretary, the complainant and the named person agree to a settlement.

(2) *Adjudicatory settlements.* At any time after the filing of objections to the Assistant Secretary's findings and/or order, the case may be settled if the participating parties agree to a settlement and the settlement is approved by the administrative law judge if the case is before the judge, or by the Board if a timely petition for review

has been filed with the Board. A copy of the settlement shall be filed with the administrative law judge or the Board, as the case may be.

(e) Any settlement approved by the Assistant Secretary, the administrative law judge, or the Board, shall constitute the final order of the Secretary and may be enforced pursuant to § 1979.113.

§ 1979.112 Judicial review.

(a) Within 60 days after the issuance of a final order by the Board under § 1979.110, any person adversely affected or aggrieved by the order may file a petition for review of the order in the United States Court of Appeals for the circuit in which the violation allegedly occurred or the circuit in which the complainant resided on the date of the violation. A final order of the Board is not subject to judicial review in any criminal or other civil proceeding.

(b) If a timely petition for review is filed, the record of a case, including the record of proceedings before the administrative law judge, will be transmitted by the Board to the appropriate court pursuant to the rules of the court.

§ 1979.113 Judicial enforcement.

Whenever any person has failed to comply with a preliminary order of reinstatement or a final order or the terms of a settlement agreement, the Secretary or a person on whose behalf the order was issued may file a civil action seeking enforcement of the order in the United States district court for the district in which the violation was found to have occurred.

§ 1979.114 Special circumstances; waiver of rules.

In special circumstances not contemplated by the provisions of this part, or for good cause shown, the administrative law judge or the Board on review may, upon application, after three days notice to all parties and interveners, waive any rule or issue any orders that justice or the administration of the Act requires.

PART 1980—PROCEDURES FOR THE HANDLING OF RETALIATION COMPLAINTS UNDER SECTION 806 OF THE SARBANES-OXLEY ACT OF 2002, AS AMENDED

Subpart A—Complaints, Investigations, Findings and Preliminary Orders

Sec.
1980.100 Purpose and scope.
1980.101 Definitions.
1980.102 Obligations and prohibited acts.
1980.103 Filing of retaliation complaints.
1980.104 Investigation.
1980.105 Issuance of findings and preliminary orders.

Subpart B—Litigation

1980.106 Objections to the findings and the preliminary order and request for a hearing.
1980.107 Hearings.
1980.108 Role of Federal agencies.
1980.109 Decision and orders of the administrative law judge.
1980.110 Decision and orders of the Administrative Review Board.

Subpart C—Miscellaneous Provisions

1980.111 Withdrawal of complaints, objections, and findings; settlement.
1980.112 Judicial review.
1980.113 Judicial enforcement.
1980.114 District court jurisdiction of retaliation complaints.
1980.115 Special circumstances; waiver of rules.

AUTHORITY: 18 U.S.C. 1514A, as amended by the Dodd-Frank Wall Street Reform and Consumer Protection Act of 2010, Pub. L. 111–203 (July 21, 2010); Secretary of Labor's Order No. 4–2010 (Sept. 2, 2010), 75 FR 55355 (Sept. 10, 2010); Secretary of Labor's Order No. 1–2010 (Jan. 15, 2010), 75 FR 3924 (Jan. 25, 2010).

SOURCE: 76 FR 68092, Nov. 3, 2011, unless otherwise noted.

Subpart A—Complaints, Investigations, Findings and Preliminary Orders

§ 1980.100 Purpose and scope.

(a) This part implements procedures under section 806 of the Corporate and Criminal Fraud Accountability Act of 2002, Title VIII of the Sarbanes-Oxley

Act of 2002 (Sarbanes-Oxley or Act), enacted into law July 30, 2002, as amended by the Dodd-Frank Wall Street Reform and Consumer Protection Act of 2010, enacted into law July 21, 2010. Sarbanes-Oxley provides for employee protection from retaliation by companies, their subsidiaries and affiliates, officers, employees, contractors, subcontractors, and agents because the employee has engaged in protected activity pertaining to a violation or alleged violation of 18 U.S.C. 1341, 1343, 1344, or 1348, or any rule or regulation of the Securities and Exchange Commission, or any provision of Federal law relating to fraud against shareholders. Sarbanes-Oxley also provides for employee protection from retaliation by nationally recognized statistical rating organizations, their officers, employees, contractors, subcontractors or agents because the employee has engaged in protected activity.

(b) This part establishes procedures pursuant to Sarbanes-Oxley for the expeditious handling of retaliation complaints made by employees, or by persons acting on their behalf. These rules, together with those codified at 29 CFR part 18, set forth the procedures for submission of complaints under Sarbanes-Oxley, investigations, issuance of findings and preliminary orders, objections to findings and orders, litigation before administrative law judges, post-hearing administrative review, withdrawals, and settlements.

§ 1980.101 Definitions.

As used in this part:

(a) *Act* means section 806 of the Corporate and Criminal Fraud Accountability Act of 2002, Title VIII of the Sarbanes-Oxley Act of 2002, Pub. L. 107–204, July 30, 2002, codified at 18 U.S.C. 1514A, as amended by the Dodd-Frank Wall Street Reform and Consumer Protection Act of 2010, Pub. L. 111–203, July 21, 2010.

(b) *Assistant Secretary* means the Assistant Secretary of Labor for Occupational Safety and Health or the person or persons to whom he or she delegates authority under the Act.

(c) *Business days* means days other than Saturdays, Sundays, and Federal holidays.

(d) *Company* means any company with a class of securities registered under section 12 of the Securities Exchange Act of 1934 (15 U.S.C. 78*l*) or any company required to file reports under section 15(d) of the Securities Exchange Act of 1934 (15 U.S.C. 78*o*(d)) including any subsidiary or affiliate whose financial information is included in the consolidated financial statements of such company.

(e) *Complainant* means the employee who filed a complaint under the Act or on whose behalf a complaint was filed.

(f) *Covered person* means any company, including any subsidiary or affiliate whose financial information is included in the consolidated financial statements of such company, or any nationally recognized statistical rating organization, or any officer, employee, contractor, subcontractor, or agent of such company or nationally recognized statistical rating organization.

(g) *Employee* means an individual presently or formerly working for a covered person, an individual applying to work for a covered person, or an individual whose employment could be affected by a covered person.

(h) *Nationally recognized statistical rating organization* means a credit rating agency under 15 U.S.C. 78c(61) that:

(1) Issues credit ratings certified by qualified institutional buyers, in accordance with 15 U.S.C. 78*o*–7(a)(1)(B)(ix), with respect to:

(i) Financial institutions, brokers, or dealers;

(ii) Insurance companies;

(iii) Corporate issuers;

(iv) Issuers of asset-backed securities (as that term is defined in section 1101(c) of part 229 of title 17, Code of Federal Regulations, as in effect on September 29, 2006);

(v) Issuers of government securities, municipal securities, or securities issued by a foreign government; or

(vi) A combination of one or more categories of obligors described in any of paragraphs (h)(1)(i) through (v) of this section; and

(2) Is registered under 15 U.S.C. 78*o*–7.

(i) *OSHA* means the Occupational Safety and Health Administration of

the United States Department of Labor.

(j) *Person* means one or more individuals, partnerships, associations, companies, corporations, business trusts, legal representatives or any group of persons.

(k) *Respondent* means the person named in the complaint who is alleged to have violated the Act.

(l) *Secretary* means the Secretary of Labor or persons to whom authority under the Act has been delegated.

(m) Any future statutory amendments that affect the definition of a term or terms listed in this section will apply in lieu of the definition stated herein.

§ 1980.102 Obligations and prohibited acts.

(a) No covered person may discharge, demote, suspend, threaten, harass or in any other manner retaliate against, including, but not limited to, intimidating, threatening, restraining, coercing, blacklisting or disciplining, any employee with respect to the employee's compensation, terms, conditions, or privileges of employment because the employee, or any person acting pursuant to the employee's request, has engaged in any of the activities specified in paragraphs (b)(1) and (2) of this section.

(b) An employee is protected against retaliation (as described in paragraph (a) of this section) by a covered person for any lawful act done by the employee:

(1) To provide information, cause information to be provided, or otherwise assist in an investigation regarding any conduct which the employee reasonably believes constitutes a violation of 18 U.S.C. 1341, 1343, 1344, or 1348, any rule or regulation of the Securities and Exchange Commission, or any provision of Federal law relating to fraud against shareholders, when the information or assistance is provided to or the investigation is conducted by—

(i) A Federal regulatory or law enforcement agency;

(ii) Any Member of Congress or any committee of Congress; or

(iii) A person with supervisory authority over the employee (or such other person working for the employer who has the authority to investigate, discover, or terminate misconduct); or

(2) To file, cause to be filed, testify, participate in, or otherwise assist in a proceeding filed or about to be filed (with any knowledge of the employer) relating to an alleged violation of 18 U.S.C. 1341, 1343, 1344, or 1348, any rule or regulation of the Securities and Exchange Commission, or any provision of Federal law relating to fraud against shareholders.

[76 FR 68092, Nov. 3, 2011, as amended at 76 FR 78151, Dec. 16, 2011]

§ 1980.103 Filing of retaliation complaints.

(a) *Who may file*. An employee who believes that he or she has been retaliated against by a covered person in violation of the Act may file, or have filed on the employee's behalf, a complaint alleging such retaliation.

(b) *Nature of filing*. No particular form of complaint is required. A complaint may be filed orally or in writing. Oral complaints will be reduced to writing by OSHA. If the complainant is unable to file the complaint in English, OSHA will accept the complaint in any language.

(c) *Place of filing*. The complaint should be filed with the OSHA office responsible for enforcement activities in the geographical area where the employee resides or was employed, but may be filed with any OSHA officer or employee. Addresses and telephone numbers for these officials are set forth in local directories and at the following Internet address: *http://www.osha.gov*

(d) *Time for filing*. Within 180 days after an alleged violation of the Act occurs or after the date on which the employee became aware of the alleged violation of the Act, any employee who believes that he or she has been retaliated against in violation of the Act may file, or have filed on the employee's behalf, a complaint alleging such retaliation. The date of the postmark, facsimile transmittal, email communication, telephone call, hand-delivery, delivery to a third-party commercial carrier, or in-person filing at an OSHA office will be considered the date of filing. The time for filing a complaint

may be tolled for reasons warranted by applicable case law.

§ 1980.104 Investigation.

(a) Upon receipt of a complaint in the investigating office, the Assistant Secretary will notify the respondent of the filing of the complaint by providing a copy of the complaint, redacted, if necessary, in accordance with the Privacy Act of 1974, 5 U.S.C. 552a, and other applicable confidentiality laws, and will also notify the respondent of its rights under paragraphs (b) and (f) of this section and paragraph (e) of § 1980.110. The Assistant Secretary will provide a copy of the unredacted complaint to the complainant (or complainant's legal counsel, if complainant is represented by counsel) and to the Securities and Exchange Commission.

(b) Within 20 days of receipt of the notice of the filing of the complaint provided under paragraph (a) of this section, the respondent may submit to the Assistant Secretary a written statement and any affidavits or documents substantiating its position. Within the same 20 days, the respondent may request a meeting with the Assistant Secretary to present its position.

(c) Throughout the investigation, the agency will provide to the complainant (or the complainant's legal counsel if complainant is represented by counsel) a copy of all of respondent's submissions to the agency that are responsive to the complainant's whistleblower complaint. Before providing such materials to the complainant, the agency will redact them, if necessary, in accordance with the Privacy Act of 1974, 5 U.S.C. 552a, and other applicable confidentiality laws. The agency will also provide the complainant with an opportunity to respond to such submissions.

(d) Investigations will be conducted in a manner that protects the confidentiality of any person who provides information on a confidential basis, other than the complainant, in accordance with part 70 of this title.

(e)(1) A complaint will be dismissed unless the complainant has made a *prima facie* showing that protected activity was a contributing factor in the adverse action alleged in the complaint.

(2) The complaint, supplemented as appropriate by interviews of the complainant, must allege the existence of facts and evidence to make a *prima facie* showing as follows:

(i) The employee engaged in a protected activity;

(ii) The respondent knew or suspected that the employee engaged in the protected activity;

(iii) The employee suffered an adverse action; and

(iv) The circumstances were sufficient to raise the inference that the protected activity was a contributing factor in the adverse action.

(3) For purposes of determining whether to investigate, the complainant will be considered to have met the required burden if the complaint on its face, supplemented as appropriate through interviews of the complainant, alleges the existence of facts and either direct or circumstantial evidence to meet the required showing, *i.e.*, to give rise to an inference that the respondent knew or suspected that the employee engaged in protected activity and that the protected activity was a contributing factor in the adverse action. The burden may be satisfied, for example, if the complaint shows that the adverse personnel action took place shortly after the protected activity, giving rise to the inference that it was a factor in the adverse action. If the required showing has not been made, the complainant (or the complainant's legal counsel, if complainant is represented by counsel) will be so notified and the investigation will not commence.

(4) Notwithstanding a finding that a complainant has made a *prima facie* showing, as required by this section, an investigation of the complaint shall not be conducted or will be discontinued if the respondent demonstrates by clear and convincing evidence that it would have taken the same adverse action in the absence of the complainant's protected activity.

(5) If the respondent fails to make a timely response or fails to satisfy the burden set forth in the prior paragraph, the Assistant Secretary will proceed with the investigation. The investigation will proceed whenever it is necessary or appropriate to confirm or

verify the information provided by the respondent.

(f) Prior to the issuance of findings and a preliminary order as provided for in § 1980.105, if the Assistant Secretary has reasonable cause, on the basis of information gathered under the procedures of this part, to believe that the respondent has violated the Act and that preliminary reinstatement is warranted, the Assistant Secretary will again contact the respondent (or the respondent's legal counsel, if respondent is represented by counsel) to give notice of the substance of the relevant evidence supporting the complainant's allegations as developed during the course of the investigation. This evidence includes any witness statements, which will be redacted to protect the identity of confidential informants where statements were given in confidence; if the statements cannot be redacted without revealing the identity of confidential informants, summaries of their contents will be provided. The complainant will also receive a copy of the materials that must be provided to the respondent under this paragraph. Before providing such materials to the complainant, the agency will redact them, if necessary, in accordance with the Privacy Act of 1974, 5 U.S.C. 552a, and other applicable confidentiality laws. The respondent will be given the opportunity to submit a written response, to meet with the investigators, to present statements from witnesses in support of its position, and to present legal and factual arguments. The respondent will present this evidence within 10 business days of the Assistant Secretary's notification pursuant to this paragraph, or as soon afterwards as the Assistant Secretary and the respondent can agree, if the interests of justice so require.

§ 1980.105 Issuance of findings and preliminary orders.

(a) After considering all the relevant information collected during the investigation, the Assistant Secretary shall issue, within 60 days of filing of the complaint, written findings as to whether or not there is reasonable cause to believe that the respondent has retaliated against the complainant in violation of the Act.

(1) If the Assistant Secretary concludes that there is reasonable cause to believe that a violation has occurred, he or she shall accompany the findings with a preliminary order providing relief to the complainant. The preliminary order will include all relief necessary to make the employee whole, including reinstatement with the same seniority status that the complainant would have had but for the retaliation; back pay with interest; and compensation for any special damages sustained as a result of the retaliation, including litigation costs, expert witness fees, and reasonable attorney's fees. Interest on back pay will be calculated using the interest rate applicable to underpayment of taxes under 26 U.S.C. 6621 and will be compounded daily.

(2) If the Assistant Secretary concludes that a violation has not occurred, the Assistant Secretary will notify the parties of that finding.

(b) The findings, and where appropriate, the preliminary order will be sent by certified mail, return receipt requested, to all parties of record (and each party's legal counsel if the party is represented by counsel). The findings, and where appropriate, the preliminary order will inform the parties of the right to object to the findings and/or order and to request a hearing, and of the right of the respondent to request an award of attorney's fees not exceeding $1,000 from the administrative law judge (ALJ) regardless of whether the respondent has filed objections, if the complaint was frivolous or brought in bad faith. The findings, and where appropriate, the preliminary order, also will give the address of the Chief Administrative Law Judge. At the same time, the Assistant Secretary will file with the Chief Administrative Law Judge, U.S. Department of Labor, a copy of the original complaint and a copy of the findings and/or order.

(c) The findings and any preliminary order will be effective 30 days after receipt by the respondent (or the respondent's legal counsel if the respondent is represented by counsel), or on the compliance date set forth in the preliminary order, whichever is later, unless an objection and/or a request for hearing has been timely filed as provided at § 1980.106. However, the portion

of any preliminary order requiring reinstatement will be effective immediately upon the respondent's receipt of the findings and the preliminary order, regardless of any objections to the findings and/or the order.

Subpart B—Litigation

§ 1980.106 Objections to the findings and the preliminary order and request for a hearing.

(a) Any party who desires review, including judicial review, of the findings and preliminary order, or a respondent alleging that the complaint was frivolous or brought in bad faith who seeks an award of attorney's fees under the Act, must file any objections and/or a request for a hearing on the record within 30 days of receipt of the findings and preliminary order pursuant to § 1980.105(b). The objections, request for a hearing, and/or request for attorney's fees must be in writing and state whether the objections are to the findings, the preliminary order, and/or whether there should be an award of attorney's fees. The date of the postmark, facsimile transmittal, or email communication is considered the date of filing; if the objection is filed in person, by hand-delivery or other means, the objection is filed upon receipt. Objections must be filed with the Chief Administrative Law Judge, U.S. Department of Labor, Washington, DC 20001, and copies of the objections must be mailed at the same time to the other parties of record, the OSHA official who issued the findings and order, the Assistant Secretary, and the Associate Solicitor, Division of Fair Labor Standards, U.S. Department of Labor.

(b) If a timely objection is filed, all provisions of the preliminary order will be stayed, except for the portion requiring preliminary reinstatement, which shall not be automatically stayed. The portion of the preliminary order requiring reinstatement will be effective immediately upon the respondent's receipt of the findings and preliminary order, regardless of any objections to the order. The respondent may file a motion with the Office of Administrative Law Judges for a stay of the Assistant Secretary's preliminary order of reinstatement, which shall be granted only based on exceptional circumstances. If no timely objection is filed with respect to either the findings or the preliminary order, the findings and/or preliminary order shall become the final decision of the Secretary, not subject to judicial review.

§ 1980.107 Hearings.

(a) Except as provided in this part, proceedings will be conducted in accordance with the rules of practice and procedure for administrative hearings before the Office of Administrative Law Judges, codified at subpart A of Part 18 of this title.

(b) Upon receipt of an objection and request for hearing, the Chief Administrative Law Judge will promptly assign the case to an ALJ who will notify the parties, by certified mail, of the day, time, and place of hearing. The hearing is to commence expeditiously, except upon a showing of good cause or unless otherwise agreed to by the parties. Hearings will be conducted *de novo*, on the record. Administrative law judges have broad discretion to limit discovery in order to expedite the hearing.

(c) If both the complainant and the respondent object to the findings and/or order, the objections will be consolidated and a single hearing will be conducted.

(d) Formal rules of evidence will not apply, but rules or principles designed to assure production of the most probative evidence will be applied. The administrative law judge may exclude evidence that is immaterial, irrelevant, or unduly repetitious.

§ 1980.108 Role of Federal agencies.

(a)(1) The complainant and the respondent will be parties in every proceeding. At the Assistant Secretary's discretion, the Assistant Secretary may participate as a party or as *amicus curiae* at any time at any stage of the proceedings. This right to participate includes, but is not limited to, the right to petition for review of a decision of an ALJ, including a decision approving or rejecting a settlement agreement between the complainant and the respondent.

(2) Copies of documents in all cases, whether or not the Assistant Secretary

is participating in the proceeding, must be sent to the Assistant Secretary, Occupational Safety and Health Administration, and to the Associate Solicitor, Division of Fair Labor Standards, U.S. Department of Labor, as well as all other parties.

(b) The Securities and Exchange Commission, if interested in a proceeding, may participate as *amicus curiae* at any time in the proceeding, at the Commission's discretion. At the request of the Securities and Exchange Commission, copies of all pleadings in a case must be sent to the Commission, whether or not the Commission is participating in the proceeding.

§ 1980.109 Decision and orders of the administrative law judge.

(a) The decision of the ALJ will contain appropriate findings, conclusions, and an order pertaining to the remedies provided in paragraph (d) of this section, as appropriate. A determination that a violation has occurred may be made only if the complainant has demonstrated by a preponderance of the evidence that protected activity was a contributing factor in the adverse action alleged in the complaint.

(b) If the complainant has satisfied the burden set forth in the prior paragraph, relief may not be ordered if the respondent demonstrates by clear and convincing evidence that it would have taken the same adverse action in the absence of any protected activity.

(c) Neither the Assistant Secretary's determination to dismiss a complaint without completing an investigation pursuant to § 1980.104(e) nor the Assistant Secretary's determination to proceed with an investigation is subject to review by the ALJ, and a complaint may not be remanded for the completion of an investigation or for additional findings on the basis that a determination to dismiss was made in error. Rather, if there otherwise is jurisdiction, the ALJ will hear the case on the merits or dispose of the matter without a hearing if the facts and circumstances warrant.

(d)(1) If the ALJ concludes that the respondent has violated the law, the order will provide all relief necessary to make the employee whole, including reinstatement with the same seniority status that the complainant would have had but for the retaliation; back pay with interest; and compensation for any special damages sustained as a result of the retaliation, including litigation costs, expert witness fees, and reasonable attorney's fees. Interest on back pay will be calculated using the interest rate applicable to underpayment of taxes under 26 U.S.C. 6621 and will be compounded daily.

(2) If the ALJ determines that the respondent has not violated the law, an order will be issued denying the complaint. If, upon the request of the respondent, the ALJ determines that a complaint was frivolous or was brought in bad faith, the judge may award to the respondent a reasonable attorney's fee, not exceeding $1,000.

(e) The decision will be served upon all parties to the proceeding, the Assistant Secretary, and the Associate Solicitor, Division of Fair Labor Standards, U.S. Department of Labor. Any ALJ's decision requiring reinstatement or lifting an order of reinstatement by the Assistant Secretary will be effective immediately upon receipt of the decision by the respondent. All other portions of the ALJ's order will be effective 10 business days after the date of the decision unless a timely petition for review has been filed with the Administrative Review Board.

§ 1980.110 Decision and orders of the Administrative Review Board.

(a) Any party desiring to seek review, including judicial review, of a decision of the ALJ, or a respondent alleging that the complaint was frivolous or brought in bad faith who seeks an award of attorney's fees, must file a written petition for review with the Administrative Review Board, U.S. Department of Labor (ARB), which has been delegated the authority to act for the Secretary and issue final decisions under this part. The decision of the ALJ will become the final order of the Secretary unless, pursuant to this section, a petition for review is timely filed with the ARB, and the ARB accepts the petition for review. The parties should identify in their petitions

for review the legal conclusions or orders to which they object, or the objections may be deemed waived. A petition must be filed within 10 business days of the date of the decision of the ALJ. The date of the postmark, facsimile transmittal, or email communication will be considered to be the date of filing; if the petition is filed in person, by hand-delivery or other means, the petition is considered filed upon receipt. The petition must be served on all parties and on the Chief Administrative Law Judge at the time it is filed with the ARB. Copies of the petition for review and all briefs must be served on the Assistant Secretary, Occupational Safety and Health Administration, and on the Associate Solicitor, Division of Fair Labor Standards, U.S. Department of Labor.

(b) If a timely petition for review is filed pursuant to paragraph (a) of this section, the decision of the ALJ will become the final order of the Secretary unless the ARB, within 30 days of the filing of the petition, issues an order notifying the parties that the case has been accepted for review. If a case is accepted for review, the decision of the ALJ will be inoperative unless and until the ARB issues an order adopting the decision, except that a preliminary order of reinstatement will be effective while review is conducted by the ARB, unless the ARB grants a motion by the respondent to stay the order based on exceptional circumstances. The ARB will specify the terms under which any briefs are to be filed. The ARB will review the factual determinations of the ALJ under the substantial evidence standard. If no timely petition for review is filed, or the ARB denies review, the decision of the ALJ will become the final order of the Secretary. If no timely petition for review is filed, the resulting final order is not subject to judicial review.

(c) The final decision of the ARB shall be issued within 120 days of the conclusion of the hearing, which will be deemed to be 10 business days after the date of the decision of the ALJ unless a motion for reconsideration has been filed with the ALJ in the interim. The ARB's final decision will be served upon all parties and the Chief Administrative Law Judge by mail. The final decision will also be served on the Assistant Secretary, Occupational Safety and Health Administration, and on the Associate Solicitor, Division of Fair Labor Standards, even if the Assistant Secretary is not a party.

(d) If the ARB concludes that the respondent has violated the law, the final order will include all relief necessary to make the complainant whole, including reinstatement with the same seniority status that the complainant would have had but for the retaliation; back pay with interest; and compensation for any special damages sustained as a result of the retaliation, including litigation costs, expert witness fees, and reasonable attorney's fees. Interest on back pay will be calculated using the interest rate applicable to underpayment of taxes under 26 U.S.C. 6621 and will be compounded daily.

(e) If the ARB determines that the respondent has not violated the law, an order will be issued denying the complaint. If, upon the request of the respondent, the ARB determines that a complaint was frivolous or was brought in bad faith, the ARB may award to the respondent a reasonable attorney's fee, not exceeding $1,000.

Subpart C—Miscellaneous Provisions

§ 1980.111 Withdrawal of complaints, objections, and findings; settlement.

(a) At any time prior to the filing of objections to the Assistant Secretary's findings and/or preliminary order, a complainant may withdraw his or her complaint by notifying the Assistant Secretary, orally or in writing, of his or her withdrawal. The Assistant Secretary then will confirm in writing the complainant's desire to withdraw and determine whether to approve the withdrawal. The Assistant Secretary will notify the parties (and each party's legal counsel if the party is represented by counsel) of the approval of any withdrawal. If the complaint is withdrawn because of settlement, the settlement must be submitted for approval in accordance with paragraph (d) of this section. A complainant may not withdraw his or her complaint

after the filing of objections to the Assistant Secretary's findings and/or preliminary order.

(b) The Assistant Secretary may withdraw his or her findings and/or preliminary order at any time before the expiration of the 30-day objection period described in §1980.106, provided that no objection has yet been filed, and substitute new findings and/or preliminary order. The date of the receipt of the substituted findings and/or order will begin a new 30-day objection period.

(c) At any time before the Assistant Secretary's findings and/or order become final, a party may withdraw its objections to the Assistant Secretary's findings and/or order by filing a written withdrawal with the ALJ. If the case is on review with the ARB, a party may withdraw its petition for review of an ALJ's decision at any time before that decision becomes final by filing a written withdrawal with the ARB. The ALJ or the ARB, as the case may be, will determine whether to approve the withdrawal of the objections or the petition for review. If the ALJ approves a request to withdraw objections to the Assistant Secretary's findings or order, and there are no other pending objections, the Assistant Secretary's findings and order will become the final order of the Secretary. If the ARB approves a request to withdraw a petition for review of an ALJ decision, and there are no other pending petitions for review of that decision, the ALJ's decision will become the final order of the Secretary. If objections or a petition for review are withdrawn because of settlement, the settlement must be submitted for approval in accordance with paragraph (d) of this section.

(d)(1) *Investigative settlements.* At any time after the filing of a complaint, and before the findings and/or order are objected to or become a final order by operation of law, the case may be settled if the Assistant Secretary, the complainant and the respondent agree to a settlement. The Assistant Secretary's approval of a settlement reached by the respondent and the complainant demonstrates his or her consent and achieves the consent of all three parties.

(2) *Adjudicatory settlements.* At any time after the filing of objections to the Assistant Secretary's findings and/or order, the case may be settled if the participating parties agree to a settlement and the settlement is approved by the ALJ if the case is before the judge, or by the ARB if the ARB has accepted the case for review. A copy of the settlement will be filed with the ALJ or the ARB, as the case may be.

(e) Any settlement approved by the Assistant Secretary, the ALJ, or the ARB, will constitute the final order of the Secretary and may be enforced pursuant to §1980.113.

§1980.112 Judicial review.

(a) Within 60 days after the issuance of a final order under §§1980.109 and 1980.110, any person adversely affected or aggrieved by the order may file a petition for review of the order in the United States Court of Appeals for the circuit in which the violation allegedly occurred or the circuit in which the complainant resided on the date of the violation.

(b) A final order of the ARB is not subject to judicial review in any criminal or other civil proceeding.

(c) If a timely petition for review is filed, the record of a case, including the record of proceedings before the ALJ, will be transmitted by the ARB to the appropriate court pursuant to the Federal Rules of Appellate Procedure and the local rules of such court.

§1980.113 Judicial enforcement.

Whenever any person has failed to comply with a preliminary order of reinstatement, or a final order, including one approving a settlement agreement, issued under the Act, the Secretary or a person on whose behalf the order was issued may file a civil action seeking enforcement of the order in the United States district court for the district in which the violation was found to have occurred. In such civil actions, the district court will have jurisdiction to grant all appropriate relief, including, but not limited to, injunctive relief and compensatory damages, including:

(a) Reinstatement with the same seniority status that the employee would have had, but for the discharge or retaliation;

(b) The amount of back pay, with interest; and

(c) Compensation for any special damages sustained as a result of the discharge or retaliation, including litigation costs, expert witness fees, and reasonable attorney's fees.

§ 1980.114 District court jurisdiction of retaliation complaints.

(a) If the Secretary has not issued a final decision within 180 days of the filing of the complaint, and there is no showing that there has been delay due to the bad faith of the complainant, the complainant may bring an action at law or equity for *de novo* review in the appropriate district court of the United States, which will have jurisdiction over such an action without regard to the amount in controversy. A party to an action brought under this paragraph shall be entitled to trial by jury.

(b) Within seven days after filing a complaint in Federal court, a complainant must file with the Assistant Secretary, the ALJ, or the ARB, depending on where the proceeding is pending, a copy of the file-stamped complaint. A copy of the complaint also must be served on the Regional Administrator, the Assistant Secretary, Occupational Safety and Health Administration, and on the Associate Solicitor, Division of Fair Labor Standards, U.S. Department of Labor.

§ 1980.115 Special circumstances; waiver of rules.

In special circumstances not contemplated by the provisions of this part, or for good cause shown, the ALJ or the ARB on review may, upon application, after three days notice to all parties, waive any rule or issue any orders that justice or the administration of the Act requires.

PART 1981—PROCEDURES FOR THE HANDLING OF DISCRIMINATION COMPLAINTS UNDER SECTION 6 OF THE PIPELINE SAFETY IMPROVEMENT ACT OF 2002

Subpart A—Complaints, Investigations, Findings, and Preliminary Orders

Sec.
1981.100 Purpose and scope.
1981.101 Definitions.
1981.102 Obligations and prohibited acts.
1981.103 Filing of discrimination complaint.
1981.104 Investigation.
1981.105 Issuance of findings and preliminary orders.

Subpart B—Litigation

1981.106 Objections to the findings and the preliminary order and request for a hearing.
1981.107 Hearings.
1981.108 Role of Federal agencies.
1981.109 Decision and orders of the administrative law judge.
1981.110 Decision and orders of the Administrative Review Board.

Subpart C—Miscellaneous Provisions

1981.111 Withdrawal of complaints, objections, and findings; settlement.
1981.112 Judicial review.
1981.113 Judicial enforcement.
1981.114 Special circumstances; waiver of rules.

AUTHORITY: 49 U.S.C. 60129; Secretary of Labor's Order 5–2002, 67 FR 65008 (October 22, 2002).

SOURCE: 69 FR 17591, Apr. 5, 2004, unless otherwise noted.

Subpart A—Complaints, Investigations, Findings, and Preliminary Orders

§ 1981.100 Purpose and scope.

(a) This part implements procedures under section 6 of the Pipeline Safety Improvement Act of 2002, 49 U.S.C. 60129 (''the Pipeline Safety Act''), which provides for employee protection from discrimination by a person owning or operating a pipeline facility or a contractor or subcontractor of such person because the employee has engaged in protected activity pertaining to a violation or alleged violation of any order, regulation, or standard under chapter 601, subtitle VIII of title

49 of the United States Code or any other provision of Federal law relating to pipeline safety.

(b) This part establishes procedures pursuant to the Pipeline Safety Act for the expeditious handling of discrimination complaints made by employees, or by persons acting on their behalf. These rules, together with those rules codified at 29 CFR part 18, set forth the procedures for submission of complaints under the Pipeline Safety Act, investigations, issuance of findings and preliminary orders, objections to findings and orders, litigation before administrative law judges, post-hearing administrative review, and withdrawals and settlements.

§ 1981.101 Definitions.

''Act'' or ''Pipeline Safety Act'' means section 6 of the Pipeline Safety Improvement Act of 2002, Public Law No. 107–355, December 17, 2002, 49 U.S.C. 60129.

''Assistant Secretary'' means the Assistant Secretary of Labor for Occupational Safety and Health or the person or persons to whom he or she delegates authority under the Act.

''Complainant'' means the employee who filed a complaint under the Act or on whose behalf a complaint was filed.

''Employee'' means an individual presently or formerly working for a person owning or operating a pipeline facility or a contractor or subcontractor of such a person, an individual applying to work for a person owning or operating a pipeline facility or a contractor or subcontractor of such a person, or an individual whose employment could be affected by a person owning or operating a pipeline facility or a contractor or subcontractor of such a person.

''Employer'' means a person owning or operating a pipeline facility or a contractor or subcontractor of such a person.

''Gas pipeline facility'' includes a pipeline, a right of way, a facility, a building, or equipment used in transporting gas or treating gas during its transportation.

''Hazardous liquid pipeline facility'' includes a pipeline, a right of way, a facility, a building, or equipment used or intended to be used in transporting hazardous liquid.

''Named person'' means the person alleged to have violated the Act.

''OSHA'' means the Occupational Safety and Health Administration of the United States Department of Labor.

''Person'' means a corporation, company, association, firm, partnership, joint stock company, an individual, a State, a municipality, and a trustee, receiver, assignee, or personal representative of a person.

''Pipeline facility'' means a gas pipeline facility and a hazardous liquid pipeline facility.

''Secretary'' means the Secretary of Labor or persons to whom authority under the Act has been delegated.

§ 1981.102 Obligations and prohibited acts.

(a) No employer may discharge any employee or otherwise discriminate against any employee with respect to the employee's compensation, terms, conditions, or privileges of employment because the employee, or any person acting pursuant to the employee's request, engaged in any of the activities specified in paragraphs (b)(1) through (5) of this section.

(b) It is a violation of the Act for any employer to intimidate, threaten, restrain, coerce, blacklist, discharge or in any other manner discriminate against any employee because the employee has:

(1) Provided, caused to be provided, or is about to provide or cause to be provided to the employer or the Federal Government, information relating to any violation or alleged violation of any order, regulation, or standard under chapter 601, subtitle VIII of title 49 of the United States Code or any other Federal law relating to pipeline safety;

(2) Refused to engage in any practice made unlawful by chapter 601, in subtitle VIII of title 49 of the United States Code or any other Federal law relating to pipeline safety, if the employee has identified the alleged illegality to the employer;

(3) Provided, caused to be provided, or is about to provide or cause to be provided, testimony before Congress or

at any Federal or State proceeding regarding any provision (or proposed provision) of chapter 601, subtitle VIII of title 49 of the United States Code or any other Federal law relating to pipeline safety, or testimony in any proceeding under chapter 601, subtitle VIII of title 49 of the United States Code or any other Federal law relating to pipeline safety, or a proceeding for the administration or enforcement of any requirement imposed under chapter 601, subtitle VIII of title 49 of the United States Code or any other Federal law relating to pipeline safety;

(4) Commenced, caused to be commenced, or is about to commence or cause to be commenced a proceeding under chapter 601, subtitle VIII of title 49 of the United States Code or any other Federal law relating to pipeline safety, or a proceeding for the administration or enforcement of any requirement imposed under chapter 601, subtitle VIII of title 49 of the United States Code or any other Federal law relating to pipeline safety; or

(5) Assisted or participated or is about to assist or participate in any manner in such a proceeding or in any other action to carry out the purposes of chapter 601, subtitle VIII of title 49 of the United States Code or any other Federal law relating to pipeline safety.

(c) This part shall have no application to any employee of an employer who, acting without direction from the employer (or such employer's agent), deliberately causes a violation of any requirement relating to pipeline safety under chapter 601, subtitle VIII of title 49 of the United States Code or any other Federal law.

§ 1981.103 Filing of discrimination complaint.

(a) Who may file. An employee who believes that he or she has been discriminated against by an employer in violation of the Act may file, or have filed by any person on the employee's behalf, a complaint alleging such discrimination.

(b) Nature of filing. No particular form of complaint is required, except that a complaint must be in writing and should include a full statement of the acts and omissions, with pertinent dates, which are believed to constitute the violations.

(c) Place of filing. The complaint should be filed with the OSHA Area Director responsible for enforcement activities in the geographical area where the employee resides or was employed, but may be filed with any OSHA officer or employee. Addresses and telephone numbers for these officials are set forth in local directories and at the following Internet address: *http://www.osha.gov*.

(d) Time for filing. Within 180 days after an alleged violation of the Act occurs (*i.e.*, when the discriminatory decision has been both made and communicated to the complainant), an employee who believes that he or she has been discriminated against in violation of the Act may file, or have filed by any person on the employee's behalf, a complaint alleging such discrimination. The date of the postmark, facsimile transmittal, or e-mail communication will be considered to be the date of filing; if the complaint is filed in person, by hand-delivery or other means, the complaint is filed upon receipt.

(e) Relationship to section 11(c) complaints. A complaint filed under the Pipeline Safety Act that alleges facts which would constitute a violation of section 11(c) of the Occupational Safety and Health Act, 29 U.S.C. 660(c), will be deemed to be a complaint filed under both the Pipeline Safety Act and section 11(c). Similarly, a complaint filed under section 11(c) that alleges facts that would constitute a violation of the Pipeline Safety Act will be deemed to be a complaint filed under both the Pipeline Safety Act and section 11(c). Normal procedures and timeliness requirements for investigations under the respective laws and regulations will be followed.

§ 1981.104 Investigation.

(a) Upon receipt of a complaint in the investigating office, the Assistant Secretary will notify the named person of the filing of the complaint, of the allegations contained in the complaint, and of the substance of the evidence supporting the complaint (redacted to protect the identity of any confidential informants). The Assistant Secretary

will also notify the named person of his or her rights under paragraphs (b) and (c) of this section and paragraph (e) of § 1981.110. A copy of the notice to the named person will also be provided to the Department of Transportation.

(b) A complaint of alleged violation shall be dismissed unless the complainant has made a *prima facie* showing that protected behavior or conduct was a contributing factor in the unfavorable personnel action alleged in the complaint.

(1) The complaint, supplemented as appropriate by interviews of the complainant, must allege the existence of facts and evidence to make a *prima facie* showing as follows:

(i) The employee engaged in a protected activity or conduct;

(ii) The named person knew or suspected, actually or constructively, that the employee engaged in the protected activity;

(iii) The employee suffered an unfavorable personnel action; and

(iv) The circumstances were sufficient to raise the inference that the protected activity was a contributing factor in the unfavorable action.

(2) For purposes of determining whether to investigate, the complainant will be considered to have met the required burden if the complaint on its face, supplemented as appropriate through interviews of the complainant, alleges the existence of facts and either direct or circumstantial evidence to meet the required showing, *i.e.*, to give rise to an inference that the named person knew or suspected that the employee engaged in protected activity and that the protected activity was a contributing factor in the unfavorable personnel action. Normally the burden is satisfied, for example, if the complaint shows that the adverse personnel action took place shortly after the protected activity, giving rise to the inference that it was a factor in the adverse action. If the required showing has not been made, the complainant will be so advised and the investigation will not commence.

(c) Notwithstanding a finding that a complainant has made a *prima facie* showing, as required by this section, an investigation of the complaint shall not be conducted if the named person, pursuant to the procedures provided in this paragraph, demonstrates by clear and convincing evidence that it would have taken the same unfavorable personnel action in the absence of the complainant's protected behavior or conduct. Within 20 days of receipt of the notice of the filing of the complaint, the named person may submit to the Assistant Secretary a written statement and any affidavits or documents substantiating his or her position. Within the same 20 days, the named person may request a meeting with the Assistant Secretary to present his or her position.

(d) If the named person fails to demonstrate by clear and convincing evidence that it would have taken the same unfavorable personnel action in the absence of the behavior protected by the Act, the Assistant Secretary will conduct an investigation. Investigations will be conducted in a manner that protects the confidentiality of any person who provides information on a confidential basis, other than the complainant, in accordance with part 70 of title 29 of the Code of Federal Regulations.

(e) Prior to the issuance of findings and a preliminary order as provided for in § 1981.105, if the Assistant Secretary has reasonable cause, on the basis of information gathered under the procedures of this part, to believe that the named person has violated the Act and that preliminary reinstatement is warranted, the Assistant Secretary will again contact the named person to give notice of the substance of the relevant evidence supporting the complainant's allegations as developed during the course of the investigation. This evidence includes any witness statements, which will be redacted to protect the identity of confidential informants where statements were given in confidence; if the statements cannot be redacted without revealing the identity of confidential informants, summaries of their contents will be provided. The named person will be given the opportunity to submit a written response, to meet with the investigators to present statements from witnesses in support of his or her position, and to present legal and factual arguments. The

named person will present this evidence within 10 business days of the Assistant Secretary's notification pursuant to this paragraph, or as soon afterwards as the Assistant Secretary and the named person can agree, if the interests of justice so require.

§ 1981.105 Issuance of findings and preliminary orders.

(a) After considering all the relevant information collected during the investigation, the Assistant Secretary shall issue, within 60 days of filing of the complaint, written findings as to whether or not there is reasonable cause to believe that the named person has discriminated against the complainant in violation of the Act.

(1) If the Assistant Secretary concludes that there is reasonable cause to believe that a violation has occurred, he or she shall accompany the findings with a preliminary order providing relief to the complainant. The preliminary order shall include, where appropriate, a requirement that the named person abate the violation; reinstatement of the complainant to his or her former position, together with the compensation (including back pay), terms, conditions and privileges of the complainant's employment; and payment of compensatory damages. Where the named person establishes that the complainant is a security risk (whether or not the information is obtained after the complainant's discharge), a preliminary order of reinstatement would not be appropriate. At the complainant's request the order shall also assess against the named person the complainant's costs and expenses (including attorney's and expert witness fees) reasonably incurred in connection with the filing of the complaint.

(2) If the Assistant Secretary concludes that a violation has not occurred, the Assistant Secretary will notify the parties of that finding.

(b) The findings and the preliminary order will be sent by certified mail, return receipt requested, to all parties of record. The letter accompanying the findings and order will inform the parties of their right to file objections and to request a hearing, and of the right of the named person to request attorney's fees from the administrative law judge, regardless of whether the named person has filed objections, if the named person alleges that the complaint was frivolous or brought in bad faith. The letter also will give the address of the Chief Administrative Law Judge. At the same time, the Assistant Secretary will file with the Chief Administrative Law Judge, U.S. Department of Labor, a copy of the original complaint and a copy of the findings and order.

(c) The findings and the preliminary order will be effective 60 days after receipt by the named person pursuant to paragraph (b) of this section, unless an objection and a request for a hearing has been filed as provided at § 1981.106. However, the portion of any preliminary order requiring reinstatement will be effective immediately upon receipt of the findings and preliminary order.

Subpart B—Litigation

§ 1981.106 Objections to the findings and the preliminary order and request for a hearing.

(a) Any party who desires review, including judicial review, of the findings and preliminary order, or a named person alleging that the complaint was frivolous or brought in bad faith who seeks an award of attorney's fees, must file any objections and/or a request for a hearing on the record within 60 days of receipt of the findings and preliminary order pursuant to paragraph (b) of § 1981.105. The objection or request for attorney's fees and request for a hearing must be in writing and state whether the objection is to the findings, the preliminary order, and/or whether there should be an award of attorney's fees. The date of the postmark, facsimile transmittal, or e-mail communication will be considered to be the date of filing; if the objection is filed in person, by hand-delivery or other means, the objection is filed upon receipt. Objections must be filed with the Chief Administrative Law Judge, U.S. Department of Labor, Washington, DC 20001 and copies of the objections must be mailed at the same time to the other parties of record, the OSHA official who issued the findings and order, and the Associate Solicitor, Division of

Fair Labor Standards, U.S. Department of Labor, Washington, DC 20210.

(b)(1) If a timely objection is filed, all provisions of the preliminary order will be stayed, except for the portion requiring preliminary reinstatement, which shall not be automatically stayed. The portion of the preliminary order requiring reinstatement will be effective immediately upon the named person's receipt of the findings and preliminary order, regardless of any objections to the order. The named person may file a motion with the Office of Administrative Law Judges for stay of the Assistant Secretary's preliminary order.

(2) If no timely objection is filed with respect to either the findings or the preliminary order, the findings or preliminary order, as the case may be, shall become the final decision of the Secretary, not subject to judicial review.

§ 1981.107 Hearings.

(a) Except as provided in this part, proceedings will be conducted in accordance with the rules of practice and procedure for administrative hearings before the Office of Administrative Law Judges, codified at subpart A, part 18 of title 29 of the Code of Federal Regulations.

(b) Upon receipt of an objection and request for hearing, the Chief Administrative Law Judge will promptly assign the case to a judge who will notify the parties, by certified mail, of the day, time, and place of hearing. The hearing is to commence expeditiously, except upon a showing of good cause or unless otherwise agreed to by the parties. Hearings will be conducted *de novo*, on the record. Administrative law judges have broad discretion to limit discovery in order to expedite the hearing.

(c) If both the complainant and the named person object to the findings and/or order, the objections will be consolidated and a single hearing will be conducted.

(d) Formal rules of evidence will not apply, but rules or principles designed to assure production of the most probative evidence will be applied. The administrative law judge may exclude evidence that is immaterial, irrelevant, or unduly repetitious.

§ 1981.108 Role of Federal agencies.

(a)(1) The complainant and the named person will be parties in every proceeding. At the Assistant Secretary's discretion, the Assistant Secretary may participate as a party or as *amicus curiae* at any time at any stage of the proceedings. This right to participate includes, but is not limited to, the right to petition for review of a decision of an administrative law judge, including a decision approving or rejecting a settlement agreement between the complainant and the named person.

(2) Copies of pleadings in all cases, whether or not the Assistant Secretary is participating in the proceeding, must be sent to the Assistant Secretary, Occupational Safety and Health Administration, and to the Associate Solicitor, Division of Fair Labor Standards, U.S. Department of Labor, Washington, DC 20210.

(b) The Secretary of Transportation may participate as *amicus curiae* at any time in the proceedings, at the Secretary of Transportation's discretion. At the request of the Secretary of Transportation, copies of all pleadings in a case must be sent to the Secretary of Transportation, whether or not the Secretary of Transportation is participating in the proceeding.

§ 1981.109 Decision and orders of the administrative law judge.

(a) The decision of the administrative law judge will contain appropriate findings, conclusions, and an order pertaining to the remedies provided in paragraph (b) of this section, as appropriate. A determination that a violation has occurred may only be made if the complainant has demonstrated that protected behavior or conduct was a contributing factor in the unfavorable personnel action alleged in the complaint. Relief may not be ordered if the named person demonstrates by clear and convincing evidence that it would have taken the same unfavorable personnel action in the absence of any protected behavior. Neither the Assistant Secretary's determination to dismiss a complaint without completing an investigation pursuant to § 1981.104(b) nor the Assistant Secretary's determination to proceed with

an investigation is subject to review by the administrative law judge, and a complaint may not be remanded for the completion of an investigation or for additional findings on the basis that a determination to dismiss was made in error. Rather, if there otherwise is jurisdiction, the administrative law judge will hear the case on the merits.

(b) If the administrative law judge concludes that the party charged has violated the law, the order shall direct the party charged to take appropriate affirmative action to abate the violation, including, where appropriate, reinstatement of the complainant to that person's former position, together with the compensation (including back pay), terms, conditions, and privileges of that employment, and compensatory damages. At the request of the complainant, the administrative law judge shall assess against the named person all costs and expenses (including attorney and expert witness fees) reasonably incurred. If, upon the request of the named person, the administrative law judge determines that a complaint was frivolous or was brought in bad faith, the judge may award to the named person a reasonable attorney's fee, not exceeding $1,000.

(c) The decision will be served upon all parties to the proceeding. Any administrative law judge's decision requiring reinstatement or lifting an order of reinstatement by the Assistant Secretary will be effective immediately upon receipt of the decision by the named person, and will not be stayed by the filing of a timely petition for review with the Administrative Review Board. All other portions of the judge's order will be effective 10 business days after the date of the decision unless a timely petition for review has been filed with the Administrative Review Board.

§ 1981.110 Decision and orders of the Administrative Review Board.

(a) Any party desiring to seek review, including judicial review, of a decision of the administrative law judge, or a named person alleging that the complaint was frivolous or brought in bad faith who seeks an award of attorney's fees, must file a written petition for review with the Administrative Review Board (''the Board''), which has been delegated the authority to act for the Secretary and issue final decisions under this part. The decision of the administrative law judge will become the final order of the Secretary unless, pursuant to this section, a petition for review is timely filed with the Board. The petition for review must specifically identify the findings, conclusions or orders to which exception is taken. Any exception not specifically urged ordinarily will be deemed to have been waived by the parties. To be effective, a petition must be filed within 10 business days of the date of the decision of the administrative law judge. The date of the postmark, facsimile transmittal, or e-mail communication will be considered to be the date of filing; if the petition is filed in person, by hand-delivery or other means, the petition is considered filed upon receipt. The petition must be served on all parties and on the Chief Administrative Law Judge at the time it is filed with the Board. Copies of the petition for review and all briefs must be served on the Assistant Secretary, Occupational Safety and Health Administration, and on the Associate Solicitor, Division of Fair Labor Standards, U.S. Department of Labor, Washington, DC 20210.

(b) If a timely petition for review is filed pursuant to paragraph (a) of this section, the decision of the administrative law judge will become the final order of the Secretary unless the Board, within 30 days of the filing of the petition, issues an order notifying the parties that the case has been accepted for review. If a case is accepted for review, the decision of the administrative law judge will be inoperative unless and until the Board issues an order adopting the decision, except that a preliminary order of reinstatement will be effective while review is conducted by the Board, unless the Board grants a motion to stay the order. The Board will specify the terms under which any briefs are to be filed. The Board will review the factual determinations of the administrative law judge under the substantial evidence standard.

(c) The final decision of the Board shall be issued within 90 days of the conclusion of the hearing, which will

be deemed to be the conclusion of all proceedings before the administrative law judge—*i.e.*, 10 business days after the date of the decision of the administrative law judge unless a motion for reconsideration has been filed with the administrative law judge in the interim. The decision will be served upon all parties and the Chief Administrative Law Judge by mail to the last known address. The final decision will also be served on the Assistant Secretary, Occupational Safety and Health Administration, and on the Associate Solicitor, Division of Fair Labor Standards, U.S. Department of Labor, Washington, DC 20210, even if the Assistant Secretary is not a party.

(d) If the Board concludes that the party charged has violated the law, the final order will order the party charged to take appropriate affirmative action to abate the violation, including, where appropriate, reinstatement of the complainant to that person's former position, together with the compensation (including back pay), terms, conditions, and privileges of that employment, and compensatory damages. At the request of the complainant, the Board shall assess against the named person all costs and expenses (including attorney's and expert witness fees) reasonably incurred.

(e) If the Board determines that the named person has not violated the law, an order will be issued denying the complaint. If, upon the request of the named person, the Board determines that a complaint was frivolous or was brought in bad faith, the Board may award to the named person a reasonable attorney's fee, not exceeding $1,000.

Subpart C—Miscellaneous Provisions

§ 1981.111 Withdrawal of complaints, objections, and findings; settlement.

(a) At any time prior to the filing of objections to the findings or preliminary order, a complainant may withdraw his or her complaint under the Act by filing a written withdrawal with the Assistant Secretary. The Assistant Secretary will then determine whether to approve the withdrawal. The Assistant Secretary will notify the named person of the approval of any withdrawal. If the complaint is withdrawn because of settlement, the settlement will be approved in accordance with paragraph (d) of this section.

(b) The Assistant Secretary may withdraw his or her findings or a preliminary order at any time before the expiration of the 60-day objection period described in § 1981.106, provided that no objection has yet been filed, and substitute new findings or preliminary order. The date of the receipt of the substituted findings or order will begin a new 60-day objection period.

(c) At any time before the findings or order become final, a party may withdraw his or her objections to the findings or order by filing a written withdrawal with the administrative law judge or, if the case is on review, with the Board. The judge or the Board, as the case may be, will determine whether to approve the withdrawal. If the objections are withdrawn because of settlement, the settlement will be approved in accordance with paragraph (d) of this section.

(d)(1) Investigative settlements. At any time after the filing of a complaint, and before the findings and/or order are objected to or become a final order by operation of law, the case may be settled if the Assistant Secretary, the complainant and the named person agree to a settlement.

(2) Adjudicatory settlements. At any time after the filing of objections to the Assistant Secretary's findings and/or order, the case may be settled if the participating parties agree to a settlement and the settlement is approved by the administrative law judge if the case is before the judge, or by the Board if a timely petition for review has been filed with the Board. A copy of the settlement will be filed with the administrative law judge or the Board, as the case may be.

(e) Any settlement approved by the Assistant Secretary, the administrative law judge, or the Board will constitute the final order of the Secretary and may be enforced pursuant to § 1981.113.

§ 1981.112 Judicial review.

(a) Within 60 days after the issuance of a final order by the Board (Secretary) under § 1981.110, any person adversely affected or aggrieved by the order may file a petition for review of the order in the United States Court of Appeals for the circuit in which the violation allegedly occurred or the circuit in which the complainant resided on the date of the violation. A final order of the Board is not subject to judicial review in any criminal or other civil proceeding.

(b) If a timely petition for review is filed, the record of a case, including the record of proceedings before the administrative law judge, will be transmitted by the Board to the appropriate court pursuant to the rules of the court.

§ 1981.113 Judicial enforcement.

Whenever any person has failed to comply with a preliminary order of reinstatement or a final order or the terms of a settlement agreement, the Secretary or a person on whose behalf the order was issued may file a civil action seeking enforcement of the order in the United States district court for the district in which the violation was found to have occurred.

§ 1981.114 Special circumstances; waiver of rules.

In special circumstances not contemplated by the provisions of this part, or for good cause shown, the administrative law judge or the Board on review may, upon application, after three days notice to all parties, waive any rule or issue any orders that justice or the administration of the Act requires.

PART 1982—PROCEDURES FOR THE HANDLING OF RETALIATION COMPLAINTS UNDER THE NATIONAL TRANSIT SYSTEMS SECURITY ACT OF 2007, ENACTED AS SECTION 1413 OF THE IMPLEMENTING RECOMMENDATIONS OF THE 9/11 COMMISSION ACT OF 2007, AND THE FEDERAL RAILROAD SAFETY ACT, AS AMENDED BY SECTION 1521 OF THE IMPLEMENTING RECOMMENDATIONS OF THE 9/11 COMMISSION ACT OF 2007

Subpart A—Complaints, Investigations, Findings and Preliminary Orders

Sec.
1982.100 Purpose and scope.
1982.101 Definitions.
1982.102 Obligations and prohibited acts.
1982.103 Filing of retaliation complaints.
1982.104 Investigation.
1982.105 Issuance of findings and preliminary orders.

Subpart B—Litigation

1982.106 Objections to the findings and the preliminary order and request for a hearing.
1982.107 Hearings.
1982.108 Role of Federal agencies.
1982.109 Decision and orders of the administrative law judge.
1982.110 Decision and orders of the Administrative Review Board.

Subpart C—Miscellaneous Provisions

1982.111 Withdrawal of complaints, objections, and petitions for review; settlement.
1982.112 Judicial review.
1982.113 Judicial enforcement.
1982.114 District court jurisdiction of retaliation complaints.
1982.115 Special circumstances; waiver of rules.

AUTHORITY: 6 U.S.C. 1142 and 49 U.S.C. 20109; Secretary of Labor's Order No. 5–2007, 72 FR 31160 (June 5, 2007); Secretary of Labor's Order No. 1–2010 (Jan. 15, 2010), 75 FR 3924–01 (Jan. 25, 2010).

SOURCE: 75 FR 53527, Aug. 31, 2010, unless otherwise noted.

Subpart A—Complaints, Investigations, Findings and Preliminary Orders

§ 1982.100 Purpose and scope.

(a) This part implements procedures of NTSSA, 6 U.S.C. 1142, and FRSA, 49 U.S.C. 20109, as amended. NTSSA provides for employee protection from retaliation because the employee has engaged in protected activity pertaining to public transportation safety or security (or, in circumstances covered by the statutes, the employee is perceived to have engaged or to be about to engage in protected activity). FRSA provides for employee protection from retaliation because the employee has engaged in protected activity pertaining to railroad safety or security (or, in circumstances covered by the statutes, the employee is perceived to have engaged or to be about to engage in protected activity), has requested medical or first aid treatment, or has followed orders or a treatment plan of a treating physician.

(b) This part establishes procedures pursuant to NTSSA and FRSA for the expeditious handling of retaliation complaints filed by employees, or by persons acting on their behalf. These rules, together with those codified at 29 CFR part 18, set forth the procedures for submission of complaints under NTSSA or FRSA, investigations, issuance of findings and preliminary orders, objections to findings and orders, litigation before administrative law judges, post-hearing administrative review, and withdrawals and settlements.

§ 1982.101 Definitions.

(a) *Assistant Secretary* means the Assistant Secretary of Labor for Occupational Safety and Health or the person or persons to whom he or she delegates authority under NTSSA or FRSA.

(b) *Business days* means days other than Saturdays, Sundays, and Federal holidays.

(c) *Complainant* means the employee who filed a NTSSA or FRSA complaint or on whose behalf a complaint was filed.

(d) *Employee* means an individual presently or formerly working for, an individual applying to work for, or an individual whose employment could be affected by a public transportation agency or a railroad carrier, or a contractor or subcontractor of a public transportation agency or a railroad carrier.

(e) *FRSA* means Section 1521 of the Implementing Recommendations of the 9/11 Commission Act of 2007, Public Law 110–053, August 3, 2007, as further amended by Public Law 110–432, October, 16, 2008, codified at 49 U.S.C. 20109.

(f) *NTSSA* means Section 1413 of the Implementing Recommendations of the 9/11 Commission Act of 2007, Public Law 110–053, August 3, 2007, codified at 6 U.S.C. 1142.

(g) *OSHA* means the Occupational Safety and Health Administration of the United States Department of Labor.

(h) *Public transportation* means transportation by a conveyance that provides regular and continuous general or special transportation to the public, but does not include school buses, charter, or intercity bus transportation or intercity passenger rail transportation provided by Amtrak.

(i) *Public transportation agency* means a publicly owned operator of public transportation eligible to receive Federal assistance under 49 U.S.C. chapter 53.

(j) *Railroad* means any form of nonhighway ground transportation that runs on rails or electromagnetic guideways, including commuter or other short-haul railroad passenger service in a metropolitan or suburban area and commuter railroad service that was operated by the Consolidated Rail Corporation on January 1, 1979 and high speed ground transportation systems that connect metropolitan areas, without regard to whether those systems use new technologies not associated with traditional railroads, but does not include rapid transit operations in an urban area that are not connected to the general railroad system of transportation.

(k) *Railroad carrier* means a person providing railroad transportation.

(l) *Respondent* means the person alleged to have violated NTSSA or FRSA.

(m) *Secretary* means the Secretary of Labor or person to whom authority

under NTSSA or FRSA has been delegated.

(n) Any future statutory amendments that affect the definition of a term or terms listed in this section will apply in lieu of the definition stated herein.

§ 1982.102 Obligations and prohibited acts.

(a) *National Transit Systems Security Act*. (1) A public transportation agency, contractor, or subcontractor of such agency, or officer or employee of such agency shall not discharge, demote, suspend, reprimand, or in any other way discriminate against, including but not limited to intimidating, threatening, restraining, coercing, blacklisting, or disciplining an employee if such discrimination is due, in whole or in part, to the employee's lawful, good faith act done, or perceived by the employer to have been done or about to be done—

(i) To provide information, directly cause information to be provided, or otherwise directly assist in any investigation regarding any conduct which the employee reasonably believes constitutes a violation of any Federal law, rule, or regulation relating to public transportation safety or security, or fraud, waste, or abuse of Federal grants or other public funds intended to be used for public transportation safety or security, if the information or assistance is provided to, or an investigation stemming from the provided information is conducted by—

(A) A Federal, State or local regulatory or law enforcement agency (including an office of the Inspector General under the Inspector General Act of 1978 (5 U.S.C. App.; Pub. L. 95–452));

(B) Any Member of Congress, any Committee of Congress, or the Government Accountability Office; or

(C) A person with supervisory authority over the employee or such other person who has the authority to investigate, discover, or terminate the misconduct;

(ii) To refuse to violate or assist in the violation of any Federal law, rule, or regulation relating to public transportation safety or security;

(iii) To file a complaint or directly cause to be brought a proceeding related to the enforcement of this section or to testify in that proceeding;

(iv) To cooperate with a safety or security investigation by the Secretary of Transportation, the Secretary of Homeland Security, or the National Transportation Safety Board; or

(v) To furnish information to the Secretary of Transportation, the Secretary of Homeland Security, the National Transportation Safety Board, or any Federal, State, or local regulatory or law enforcement agency as to the facts relating to any accident or incident resulting in injury or death to an individual or damage to property occurring in connection with public transportation.

(2)(i) A public transportation agency, contractor, or subcontractor of such agency, or officer or employee of such agency shall not discharge, demote, suspend, reprimand, or in any other way discriminate against, including but not limited to intimidating, threatening, restraining, coercing, blacklisting, or disciplining an employee for—

(A) Reporting a hazardous safety or security condition;

(B) Refusing to work when confronted by a hazardous safety or security condition related to the performance of the employee's duties, if the conditions described in paragraph (a)(2)(ii) of this section exist; or

(C) Refusing to authorize the use of any safety- or security-related equipment, track, or structures, if the employee is responsible for the inspection or repair of the equipment, track, or structures, when the employee believes that the equipment, track, or structures are in a hazardous safety or security condition, if the conditions described in paragraph (a)(2)(ii) of this section exist.

(ii) A refusal is protected under paragraph (a)(2)(i)(B) and (C) of this section if—

(A) The refusal is made in good faith and no reasonable alternative to the refusal is available to the employee;

(B) A reasonable individual in the circumstances then confronting the employee would conclude that—

(*1*) The hazardous condition presents an imminent danger of death or serious injury; and

(*2*) The urgency of the situation does not allow sufficient time to eliminate the danger without such refusal; and

(C) The employee, where possible, has notified the public transportation agency of the existence of the hazardous condition and the intention not to perform further work, or not to authorize the use of the hazardous equipment, track, or structures, unless the condition is corrected immediately or the equipment, track, or structures are repaired properly or replaced.

(iii) In paragraph (a)(2)(ii) of this section, only paragraph (a)(2)(ii)(A) shall apply to security personnel, including transit police, employed or utilized by a public transportation agency to protect riders, equipment, assets, or facilities.

(b) *Federal Railroad Safety Act*. (1) A railroad carrier engaged in interstate or foreign commerce, a contractor or a subcontractor of such a railroad carrier, or an officer or employee of such a railroad carrier, may not discharge, demote, suspend, reprimand, or in any other way discriminate against, including but not limited to intimidating, threatening, restraining, coercing, blacklisting, or disciplining an employee if such discrimination is due, in whole or in part, to the employee's lawful, good faith act done, or perceived by the employer to have been done or about to be done—

(i) To provide information, directly cause information to be provided, or otherwise directly assist in any investigation regarding any conduct which the employee reasonably believes constitutes a violation of any Federal law, rule, or regulation relating to railroad safety or security, or gross fraud, waste, or abuse of Federal grants or other public funds intended to be used for railroad safety or security, if the information or assistance is provided to or an investigation stemming from the provided information is conducted by—

(A) A Federal, State, or local regulatory or law enforcement agency (including an office of the Inspector General under the Inspector General Act of 1978 (5 U.S.C. App.; Pub. L. 95–452));

(B) Any Member of Congress, any committee of Congress, or the Government Accountability Office; or

(C) A person with supervisory authority over the employee or such other person who has the authority to investigate, discover, or terminate the misconduct;

(ii) To refuse to violate or assist in the violation of any Federal law, rule, or regulation relating to railroad safety or security;

(iii) To file a complaint, or directly cause to be brought a proceeding related to the enforcement of 49 U.S.C. part A of subtitle V or, as applicable to railroad safety or security, 49 U.S.C. chapter 51 or 57, or to testify in that proceeding;

(iv) To notify, or attempt to notify, the railroad carrier or the Secretary of Transportation of a work-related personal injury or work-related illness of an employee;

(v) To cooperate with a safety or security investigation by the Secretary of Transportation, the Secretary of Homeland Security, or the National Transportation Safety Board;

(vi) To furnish information to the Secretary of Transportation, the Secretary of Homeland Security, the National Transportation Safety Board, or any Federal, State, or local regulatory or law enforcement agency as to the facts relating to any accident or incident resulting in injury or death to an individual or damage to property occurring in connection with railroad transportation; or

(vii) To accurately report hours on duty pursuant to 49 U.S.C. chapter 211.

(2)(i) A railroad carrier engaged in interstate or foreign commerce, or an officer or employee of such a railroad carrier, shall not discharge, demote, suspend, reprimand, or in any other way discriminate against, including but not limited to intimidating, threatening, restraining, coercing, blacklisting, or disciplining an employee for—

(A) Reporting, in good faith, a hazardous safety or security condition;

(B) Refusing to work when confronted by a hazardous safety or security condition related to the performance of the employee's duties, if the conditions described in paragraph (b)(2)(ii) of this section exist; or

(C) Refusing to authorize the use of any safety-related equipment, track, or

structures, if the employee is responsible for the inspection or repair of the equipment, track, or structures, when the employee believes that the equipment, track, or structures are in a hazardous safety or security condition, if the conditions described in paragraph (b)(2)(ii) of this section exist.

(ii) A refusal is protected under paragraphs (b)(2)(i)(B) and (C) of this section if—

(A) The refusal is made in good faith and no reasonable alternative to the refusal is available to the employee;

(B) A reasonable individual in the circumstances then confronting the employee would conclude that—

(*1*) The hazardous condition presents an imminent danger of death or serious injury; and

(*2*) The urgency of the situation does not allow sufficient time to eliminate the danger without such refusal; and

(C) The employee, where possible, has notified the railroad carrier of the existence of the hazardous condition and the intention not to perform further work, or not to authorize the use of the hazardous equipment, track, or structures, unless the condition is corrected immediately or the equipment, track, or structures are repaired properly or replaced.

(iii) In paragraph (b)(2)(ii) of this section, only paragraph (b)(2)(ii)(A) shall apply to security personnel employed by a railroad carrier to protect individuals and property transported by railroad.

(3) A railroad carrier engaged in interstate or foreign commerce, a contractor or a subcontractor of such a railroad carrier, or an officer or employee of such a railroad carrier may not discipline, or threaten discipline to, an employee for requesting medical or first aid treatment, or for following orders or a treatment plan of a treating physician, except that—

(i) A railroad carrier's refusal to permit an employee to return to work following medical treatment shall not be considered a violation of FRSA if the refusal is pursuant to Federal Railroad Administration medical standards for fitness of duty or, if there are no pertinent Federal Railroad Administration standards, a carrier's medical standards for fitness for duty.

(ii) For purposes of this paragraph, the term ''discipline'' means to bring charges against a person in a disciplinary proceeding, suspend, terminate, place on probation, or make note of reprimand on an employee's record.

§ 1982.103 Filing of retaliation complaints.

(a) *Who may file.* An employee who believes that he or she has been retaliated against by an employer in violation of NTSSA or FRSA may file, or have filed by any person on the employee's behalf, a complaint alleging such retaliation.

(b) *Nature of filing.* No particular form of complaint is required. A complaint may be filed orally or in writing. Oral complaints will be reduced to writing by OSHA. If a complainant is unable to file the complaint in English, OSHA will accept the complaint in any language.

(c) *Place of filing.* The complaint should be filed with the OSHA Area Director responsible for enforcement activities in the geographical area where the employee resides or was employed, but may be filed with any OSHA officer or employee. Addresses and telephone numbers for these officials are set forth in local directories and at the following Internet address: *http://www.osha.gov.*

(d) *Time for Filing.* Within 180 days after an alleged violation of NTSSA or FRSA occurs, an employee who believes that he or she has been retaliated against in violation of NTSSA or FRSA may file, or have filed by any person on the employee's behalf, a complaint alleging such retaliation. The date of the postmark, facsimile transmittal, e-mail communication, telephone call, hand-delivery, delivery to a third-party commercial carrier, or in-person filing at an OSHA office will be considered the date of filing. The time for filing a complaint may be tolled for reasons warranted by applicable case law.

§ 1982.104 Investigation.

(a) Upon receipt of a complaint in the investigating office, the Assistant Secretary will notify the respondent of the filing of the complaint by providing a

copy of the complaint, redacted, if necessary, in accordance with the Privacy Act of 1974, 5 U.S.C. 552a, *et seq.*, and other applicable confidentiality laws, and will also notify the respondent of its rights under paragraphs (b) and (f) of this section and paragraph (e) of § 1982.110. The Assistant Secretary will provide a copy of the unredacted complaint to the complainant (or to the complainant's legal counsel, if complainant is represented by counsel), and to the Federal Railroad Administration, the Federal Transit Administration, or the Transportation Security Administration as appropriate.

(b) Within 20 days of receipt of the notice of the filing of the complaint provided under paragraph (a) of this section, the respondent may submit to the Assistant Secretary a written statement and any affidavits or documents substantiating its position. Within the same 20 days, the respondent may request a meeting with the Assistant Secretary to present its position.

(c) Throughout the investigation, the agency will provide to the complainant (or the complainant's legal counsel if complainant is represented by counsel) a copy of all of respondent's submissions to the agency that are responsive to the complainant's whistleblower complaint. Before providing such materials to the complainant, the agency will redact them, if necessary, in accordance with the Privacy Act of 1974, 5 U.S.C. 552a, *et seq.*, and other applicable confidentiality laws.

(d) Investigations will be conducted in a manner that protects the confidentiality of any person who provides information on a confidential basis, other than the complainant, in accordance with part 70 of title 29 of the Code of Federal Regulations.

(e)(1) A complaint of alleged violation will be dismissed unless the complainant has made a prima facie showing that protected activity was a contributing factor in the adverse action alleged in the complaint.

(2) The complaint, supplemented as appropriate by interviews of the complainant, must allege the existence of facts and evidence to make a prima facie showing as follows:

(i) The employee engaged in a protected activity (or, in circumstances covered by the statutes, was perceived to have engaged or to be about to engage in protected activity);

(ii) The respondent knew or suspected, actually or constructively, that the employee engaged in the protected activity (or, in circumstances covered by the statutes, perceived the employee to have engaged or to be about to engage in protected activity);

(iii) The employee suffered an adverse action; and

(iv) The circumstances were sufficient to raise the inference that the protected activity (or perception thereof) was a contributing factor in the adverse action.

(3) For purposes of determining whether to investigate, the complainant will be considered to have met the required burden if the complaint on its face, supplemented as appropriate through interviews of the complainant, alleges the existence of facts and either direct or circumstantial evidence to meet the required showing, *i.e.*, to give rise to an inference that the respondent knew or suspected that the employee engaged in protected activity (or, in circumstances covered by the statutes, perceived the employee to have engaged or to be about to engage in protected activity), and that the protected activity (or perception thereof) was a contributing factor in the adverse action. The burden may be satisfied, for example, if the complaint shows that the adverse action took place shortly after the protected activity, giving rise to the inference that it was a contributing factor in the adverse action. If the required showing has not been made, the complainant (or the complainant's legal counsel if complainant is represented by counsel) will be so notified and the investigation will not commence.

(4) Notwithstanding a finding that a complainant has made a prima facie showing, as required by this section, an investigation of the complaint will not be conducted or will be discontinued if the respondent, pursuant to the procedures provided in this paragraph, demonstrates by clear and convincing evidence that it would have taken the

same adverse action in the absence of the complainant's protected activity.

(5) If the respondent fails to make a timely response or fails to satisfy the burden set for in the prior paragraph, the Assistant Secretary will proceed with the investigation. The investigation will proceed whenever it is necessary or appropriate to confirm or verify the information provided by the respondent.

(f) Prior to the issuance of findings and a preliminary order as provided for in § 1982.105, if the Assistant Secretary has reasonable cause, on the basis of information gathered under the procedures of this part, to believe that the respondent has violated NTSSA or FRSA and that preliminary reinstatement is warranted, the Assistant Secretary will again contact the respondent (or the respondent's legal counsel if respondent is represented by counsel) to give notice of the substance of the relevant evidence supporting the complainant's allegations as developed during the course of the investigation. This evidence includes any witness statements, which will be redacted to protect the identity of confidential informants where statements were given in confidence; if the statements cannot be redacted without revealing the identity of confidential informants, summaries of their contents will be provided. The respondent will be given the opportunity to submit a written response, to meet with the investigators, to present statements from witnesses in support of its position, and to present legal and factual arguments. The respondent will present this evidence within 10 business days of the Assistant Secretary's notification pursuant to this paragraph, or as soon thereafter as the Assistant Secretary and the respondent can agree, if the interests of justice so require.

§ 1982.105 Issuance of findings and preliminary orders.

(a) After considering all the relevant information collected during the investigation, the Assistant Secretary will issue, within 60 days of filing of the complaint, written findings as to whether or not there is reasonable cause to believe that the respondent has retaliated against the complainant in violation of NTSSA or FRSA.

(1) If the Assistant Secretary concludes that there is reasonable cause to believe that a violation has occurred, he or she will accompany the findings with a preliminary order providing relief to the complainant. The preliminary order will include, where appropriate: a requirement that the respondent abate the violation; reinstatement of the complainant to his or her former position, together with the compensation (including back pay), terms, conditions and privileges of the complainant's employment; payment of compensatory damages, including, at the request of the complainant, the aggregate amount of all costs and expenses (including attorney's and expert witness fees) reasonably incurred. It may also include payment of punitive damages up to $250,000.

(2) If the Assistant Secretary concludes that a violation has not occurred, the Assistant Secretary will notify the parties of that finding.

(b) The findings and the preliminary order will be sent by certified mail, return receipt requested, to all parties of record (and each party's legal counsel if the party is represented by counsel). The findings and, where appropriate, the preliminary order will inform the parties of the right to object to the findings and/or order and to request a hearing, and of the right of the respondent under NTSSA to request attorney's fees not exceeding $1,000 from the administrative law judge (''ALJ'') regardless of whether the respondent has filed objections, if the respondent alleges that the complaint was frivolous or brought in bad faith, and will also give the address of the Chief Administrative Law Judge. At the same time, the Assistant Secretary will file with the Chief Administrative Law Judge, U.S. Department of Labor, a copy of the original complaint and a copy of the findings and/or order.

(c) The findings and the preliminary order will be effective 30 days after receipt by the respondent (or the respondent's legal counsel if the respondent is represented by counsel) or on the compliance date set forth in the preliminary order, whichever is later, unless an objection and/or a request for a

hearing has been timely filed as provided at § 1982.106. However, the portion of any preliminary order requiring reinstatement will be effective immediately upon the respondent's receipt of the findings and preliminary order, regardless of any objections to the findings and/or order.

Subpart B—Litigation

§ 1982.106 Objections to the findings and the preliminary order and request for a hearing.

(a) Any party who desires review, including judicial review, of the findings and preliminary order, or a respondent alleging that the complaint was frivolous or brought in bad faith who seeks an award of attorney's fees up to $1,000 under NTSSA, must file any objections and/or a request for a hearing on the record within 30 days of receipt of the findings and preliminary order pursuant to paragraph (b) of § 1982.105. The objections, request for a hearing, and/or request for attorney's fees must in writing and state whether the objections are to the findings, the preliminary order, and/or whether there should be an award of attorney's fees. The date of the postmark, facsimile transmittal, or e-mail communication will be considered to be the date of filing; if the objection is filed in person, by hand-delivery or other means, the objection is filed upon receipt. Objections must be filed with the Chief Administrative Law Judge, U.S. Department of Labor, Washington, DC 20001 and copies of the objections must be mailed at the same time to the other parties of record, the OSHA official who issued the findings and order, the Assistant Secretary, and the Associate Solicitor, Division of Fair Labor Standards, U.S. Department of Labor.

(b) If a timely objection is filed, all provisions of the preliminary order will be stayed, except for the portion requiring preliminary reinstatement, which will not be automatically stayed. The portion of the preliminary order requiring reinstatement will be effective immediately upon the respondent's receipt of the findings and preliminary order, regardless of any objections to the order. The respondent may file a motion with the Office of Administrative Judges for a stay of the Assistant Secretary's preliminary order of reinstatement. If no timely objection is filed with respect to either the findings or the preliminary order, the findings or preliminary order will become the final decision of the Secretary, not subject to judicial review.

§ 1982.107 Hearings.

(a) Except as provided in this part, proceedings will be conducted in accordance with the rules of practice and procedure, and the rules of evidence, for administrative hearings before the Office of Administrative Law Judges, codified at part 18 of title 29 of the Code of Federal Regulations.

(b) Upon receipt of an objection and request for hearing, the Chief Administrative Law Judge will promptly assign the case to a judge who will notify the parties, by certified mail, of the day, time, and place of hearing. The hearing is to commence expeditiously, except upon a showing of good cause or unless otherwise agreed to by the parties. Hearings will be conducted *de novo* and on the record.

(c) If both the complainant and the respondent object to the findings and/or order, the objections will be consolidated and a single hearing will be conducted.

§ 1982.108 Role of Federal agencies.

(a)(1) The complainant and the respondent will be parties in every proceeding. At the Assistant Secretary's discretion, the Assistant Secretary may participate as a party or as amicus curiae at any time at any stage of the proceeding. This right to participate includes, but is not limited to, the right to petition for review of a decision of an ALJ, including a decision approving or rejecting a settlement agreement between the complainant and the respondent.

(2) Copies of documents in all cases, whether or not the Assistant Secretary is participating in the proceeding, must be sent to the Assistant Secretary, Occupational Safety and Health Administration, and to the Associate Solicitor, Division of Fair Labor Standards, U.S. Department of Labor, as well as all other parties.

(b) The Department of Homeland Security or the Department of Transportation, if interested in a proceeding, may participate as amicus curiae at any time in the proceeding, at the agency's discretion. At the request of the interested Federal agency, copies of all pleadings in a case must be sent to the Federal agency, whether or not the agency is participating in the proceeding.

§ 1982.109 Decision and orders of the administrative law judge.

(a) The decision of the ALJ will contain appropriate findings, conclusions, and an order pertaining to the remedies provided in paragraph (d) of this section, as appropriate. A determination that a violation has occurred may be made only if the complainant has demonstrated by a preponderance of the evidence that protected activity was a contributing factor in the adverse action alleged in the complaint.

(b) If the complainant has satisfied the burden set forth in the prior paragraph, relief may not be ordered if the respondent demonstrates by clear and convincing evidence that it would have taken the same adverse action in the absence of any protected behavior.

(c) Neither the Assistant Secretary's determination to dismiss a complaint without completing an investigation pursuant to § 1982.104(e) nor the Assistant Secretary's determination to proceed with an investigation is subject to review by the ALJ, and a complaint may not be remanded for the completion of an investigation or for additional findings on the basis that a determination to dismiss was made in error. Rather, if there otherwise is jurisdiction, the ALJ will hear the case on the merits or dispose of the matter without a hearing if the facts and circumstances warrant.

(d)(1) If the ALJ concludes that the respondent has violated the law, the order will direct the respondent to take appropriate affirmative action to make the employee whole, including, where appropriate: a requirement that the respondent abate the violation; reinstatement with the same seniority status that the employee would have had but for the retaliation; back pay with interest; and compensation for any special damages sustained as a result of the retaliation, including litigation costs, expert witness fees, and reasonable attorney's fees. The order may also include payment of punitive damages up to $250,000.

(2) If the ALJ determines that the respondent has not violated the law, an order will be issued denying the complaint. If, upon the request of the respondent, the ALJ determines that a complaint filed under NTSSA was frivolous or was brought in bad faith, the ALJ may award to the respondent a reasonable attorney's fee, not exceeding $1,000.

(e) The decision will be served upon all parties to the proceeding, the Assistant Secretary, and the Associate Solicitor, Division of Fair Labor Standards. Any ALJ's decision requiring reinstatement or lifting an order of reinstatement by the Assistant Secretary will be effective immediately upon receipt of the decision by the respondent. All other portions of the ALJ's order will be effective 10 business days after the date of the decision unless a timely petition for review has been filed with the Administrative Review Board (''ARB'').

§ 1982.110 Decision and orders of the Administrative Review Board.

(a) Any party desiring to seek review, including judicial review, of a decision of the ALJ, or a respondent alleging that the complaint under NTSSA was frivolous or brought in bad faith who seeks an award of attorney's fees up to $1,000, must file a written petition for review with the ARB, U.S. Department of Labor (200 Constitution Avenue, NW., Washington, DC 20210), which has been delegated the authority to act for the Secretary and issue final decisions under this part. The decision of the ALJ will become the final order of the Secretary unless, pursuant to this section, a petition for review is timely filed with the ARB and the ARB accepts the petition for review. The parties should identify in their petitions for review the legal conclusions or orders to which they object, or the objections will ordinarily be deemed waived. A petition must be filed within 10 business days of the date of the decision of the ALJ. The date of the postmark,

facsimile transmittal, or e-mail communication will be considered to be the date of filing; if the petition is filed in person, by hand-delivery or other means, the petition is considered filed upon receipt. The petition must be served on all parties and on the Chief Administrative Law Judge at the time it is filed with the ARB. Copies of the petition for review and all briefs must be served on the Assistant Secretary, and on the Associate Solicitor, Division of Fair Labor Standards, U.S. Department of Labor.

(b) If a timely petition for review is filed pursuant to paragraph (a) of this section, the decision of the ALJ will become the final order of the Secretary unless the ARB, within 30 days of the filing of the petition, issues an order notifying the parties that the case has been accepted for review. If a case is accepted for review, the decision of the ALJ will be inoperative unless and until the ARB issues an order adopting the decision, except that a preliminary order of reinstatement will be effective while review is conducted by the ARB, unless the ARB grants a motion by the respondent to stay that order based on exceptional circumstances. The ARB will specify the terms under which any briefs are to be filed. The ARB will review the factual determinations of the ALJ under the substantial evidence standard. If no timely petition for review is filed, or the ARB denies review, the decision of the ALJ will become the final order of the Secretary. If no timely petition for review is filed, the resulting final order is not subject to judicial review.

(c) The final decision of the ARB will be issued within 120 days of the conclusion of the hearing, which will be deemed to be 10 business days after the date of the decision of the ALJ unless a motion for reconsideration has been filed with the ALJ in the interim, in which case the conclusion of the hearing is the date the motion for reconsideration is denied or ten business days after a new decision is issued. The ARB's final decision will be served upon all parties and the Chief Administrative Law Judge by mail. The final decision also will be served on the Assistant Secretary, and on the Associate Solicitor, Division of Fair Labor Standards, U.S. Department of Labor, even if the Assistant Secretary is not a party.

(d) If the ARB concludes that the respondent has violated the law, the final order will order the respondent to take appropriate affirmative action to make the employee whole, including, where appropriate: a requirement that the respondent abate the violation; reinstatement with the same seniority status that the employee would have had but for the retaliation; back pay with interest; and compensation for any special damages sustained as a result of the retaliation, including litigation costs, expert witness fees, and reasonable attorney's fees. The order also may include payment of punitive damages up to $250,000.

(e) If the ARB determines that the respondent has not violated the law, an order will be issued denying the complaint. If, upon the request of the respondent, the ARB determines that a complaint under NTSSA was frivolous or was brought in bad faith, the ARB may award to the respondent a reasonable attorney's fee, not exceeding $1,000.

Subpart C—Miscellaneous Provisions

§ 1982.111 Withdrawal of complaints, objections, and petitions for review; settlement.

(a) At any time prior to the filing of objections to the Assistant Secretary's findings and/or preliminary order, a complainant may withdraw his or her complaint under NTSSA or FRSA by filing a written withdrawal with the Assistant Secretary. The Assistant Secretary then will determine whether to approve the withdrawal. The Assistant Secretary will notify the respondent (or the respondent's legal counsel if respondent is represented by counsel) of the approval of any withdrawal. If the complaint is withdrawn because of settlement, the settlement must be submitted for approval in accordance with paragraph (d) of this section. A complainant may not withdraw his or her complaint after the filing of objections to the Assistant Secretary's findings and preliminary order.

(b) The Assistant Secretary may withdraw his or her findings and/or a preliminary order at any time before the expiration of the 30-day objection period described in § 1982.106, provided that no objection yet has been filed, and substitute new findings and/or a preliminary order. The date of the receipt of the substituted findings or order will begin a new 30-day objection period.

(c) At any time before the Assistant Secretary's findings and/or order become final, a party may withdraw its objections to the Assistant Secretary's findings and/or order by filing a written withdrawal with the ALJ. If a case is on review with the ARB, a party may withdraw its petition for review of an ALJ's decision at any time before that decision becomes final by filing a written withdrawal with the ARB. The ALJ or the ARB, as the case may be, will determine whether to approve the withdrawal of the objections or the petition for review. If the ALJ approves a request to withdraw objections to the Assistant Secretary's findings and/or order, and there are no other pending objections, the Assistant Secretary's findings and/or order will become the final order of the Secretary. If the ARB approves a request to withdraw a petition for review of an ALJ decision, and there are no other pending petitions for review of that decision, the ALJ's decision will become the final order of the Secretary. If objections or a petition for review are withdrawn because of settlement, the settlement must be submitted for approval in accordance with paragraph (d) of this section.

(d)(1) *Investigative settlements*. At any time after the filing of a complaint, and before the findings and/or order are objected to or become a final order by operation of law, the case may be settled if the Assistant Secretary, the complainant, and the respondent agree to a settlement. The Assistant Secretary's approval of a settlement reached by the respondent and the complainant demonstrates his or her consent and achieves the consent of all three parties.

(2) *Adjudicatory settlements*. At any time after the filing of objections to the Assistant Secretary's findings and/or order, the case may be settled if the participating parties agree to a settlement and the settlement is approved by the ALJ if the case is before the ALJ, or by the ARB if the ARB has accepted the case for review. A copy of the settlement will be filed with the ALJ or the ARB, as the case may be.

(e) Any settlement approved by the Assistant Secretary, the ALJ, or the ARB will constitute the final order of the Secretary and may be enforced pursuant to § 1982.113.

§ 1982.112 Judicial review.

(a) Within 60 days after the issuance of a final order under §§ 1982.109 and 1982.110, any person adversely affected or aggrieved by the order may file a petition for review of the order in the United States Court of Appeals for the circuit in which the violation allegedly occurred or the circuit in which the complainant resided on the date of the violation.

(b) A final order of the ARB is not subject to judicial review in any criminal or other civil proceeding.

(c) If a timely petition for review is filed, the record of a case, including the record of proceedings before the ALJ, will be transmitted by the ARB to the appropriate court pursuant to the Federal Rules of Appellate Procedure and the local rules of the court.

§ 1982.113 Judicial enforcement.

Whenever any person has failed to comply with a preliminary order of reinstatement, or a final order, including one approving a settlement agreement, issued under NTSSA, the Secretary or a person on whose behalf the order was issued may file a civil action seeking enforcement of the order in the United States district court for the district in which the violation was found to have occurred. Whenever a person has failed to comply with a preliminary order of reinstatement, or a final order, including one approving a settlement agreement, issued under FRSA, the Secretary may file a civil action seeking enforcement of the order in the United States district court for the district in which the violation was found to have occurred. In such civil actions under NTSSA and FRSA, the district court

will have jurisdiction to grant all appropriate relief, including, but not limited to, injunctive relief and compensatory damages, including:

(1) Reinstatement with the same seniority status that the employee would have had, but for the retaliation;

(2) The amount of back pay, with interest; and

(3) Compensation for any special damages sustained as a result of the retaliation, including litigation costs, expert witness fees, and reasonable attorney's fees.

§ 1982.114 District Court jurisdiction of retaliation complaints.

(a) If there is no final order of the Secretary, 210 days have passed since the filing of the complaint, and there is no showing that there has been delay due to the bad faith of the complainant, the complainant may bring an action at law or equity for *de novo* review in the appropriate district court of the United States, which will have jurisdiction over such an action without regard to the amount in controversy.

(b) Fifteen days in advance of filing a complaint in Federal court, a complainant must file with the Assistant Secretary, the ALJ, or the ARB, depending upon where the proceeding is pending, a notice of his or her intention to file such complaint. The notice must be served on all parties to the proceeding. A copy of the notice must be served on the Regional Administrator, the Assistant Secretary, Occupational Safety and Health Administration, and on the Associate Solicitor, Division of Fair Labor Standards, U.S. Department of Labor. The complainant shall file and serve a copy of the district court complaint on the above as soon as possible after the district court complaint has been filed with the court.

§ 1982.115 Special circumstances; waiver of rules.

In special circumstances not contemplated by the provisions of these rules, or for good cause shown, the ALJ or the ARB on review may, upon application, after three days notice to all parties, waive any rule or issue such orders that justice or the administration of NTSSA or FRSA requires.

PART 1983—PROCEDURES FOR THE HANDLING OF RETALIATION COMPLAINTS UNDER SECTION 219 OF THE CONSUMER PRODUCT SAFETY IMPROVEMENT ACT OF 2008

Subpart A—Complaints, Investigations, Findings and Preliminary Orders

Sec.
1983.100 Purpose and scope.
1983.101 Definitions.
1983.102 Obligations and prohibited acts.
1983.103 Filing of retaliation complaint.
1983.104 Investigation.
1983.105 Issuance of findings and preliminary orders.

Subpart B—Litigation

1983.106 Objections to the findings and the preliminary order and requests for a hearing.
1983.107 Hearings.
1983.108 Role of Federal agencies.
1983.109 Decision and orders of the administrative law judge.
1983.110 Decision and orders of the Administrative Review Board.

Subpart C—Miscellaneous Provisions

1983.111 Withdrawal of complaints, findings, objections, and petitions for review; settlement.
1983.112 Judicial review.
1983.113 Judicial enforcement.
1983.114 District court jurisdiction of retaliation complaints.
1983.115 Special circumstances; waiver of rules.

AUTHORITY: 15 U.S.C. 2087; Secretary's Order 1–2012 (Jan. 18, 2012), 77 FR 3912 (Jan. 25, 2012); Secretary's Order 1–2010 (Jan. 15, 2010), 75 FR 3924 (Jan. 25, 2010).

SOURCE: 77 FR 40503, July 10, 2012, unless otherwise noted.

Subpart A—Complaints, Investigations, Findings and Preliminary Orders

§ 1983.100 Purpose and scope.

(a) This part implements procedures of the employee protection provisions of the Consumer Product Safety Improvement Act (CPSIA), 15 U.S.C. 2087.

CPSIA provides for employee protection from retaliation because the employee has engaged in protected activity pertaining to consumer product safety.

(b) This part establishes procedures under CPSIA for the expeditious handling of retaliation complaints filed by employees, or by persons acting on their behalf. These rules, together with those codified at 29 CFR part 18, set forth the procedures under CPSIA for submission of complaints, investigations, issuance of findings and preliminary orders, objections to findings and orders, litigation before administrative law judges (ALJs), post-hearing administrative review, and withdrawals and settlements.

§ 1983.101 Definitions.

As used in this part:

(a) *Assistant Secretary* means the Assistant Secretary of Labor for Occupational Safety and Health or the person or persons to whom he or she delegates authority under CPSIA.

(b) *Business days* means days other than Saturdays, Sundays, and Federal holidays.

(c) *Commission* means the Consumer Product Safety Commission.

(d) *Complainant* means the employee who filed a CPSIA complaint or on whose behalf a complaint was filed.

(e)(1) *Consumer product* means any article, or component part thereof, produced or distributed:

(i) For sale to a consumer for use in or around a permanent or temporary household or residence, a school, in recreation, or otherwise; or

(ii) For the personal use, consumption or enjoyment of a consumer in or around a permanent or temporary household or residence, a school, in recreation, or otherwise.

(iii) The term ''consumer product'' includes any mechanical device which carries or conveys passengers along, around, or over a fixed or restricted route or course or within a defined area for the purpose of giving its passengers amusement, which is customarily controlled or directed by an individual who is employed for that purpose and who is not a consumer with respect to such device, and which is not permanently fixed to a site, but does not include such a device that is permanently fixed to a site.

(2) The term *consumer product* does not include:

(i) Any article which is not customarily produced or distributed for sale to, or use or consumption by, or enjoyment of, a consumer;

(ii) Tobacco and tobacco products;

(iii) Motor vehicles or motor vehicle equipment (as defined by 49 U.S.C. 30102(a)(6) and (7));

(iv) Pesticides (as defined by the Federal Insecticide, Fungicide, and Rodenticide Act (7 U.S.C. 136 *et seq.*));

(v) Any article or any component of any such article which, if sold by the manufacturer, producer, or importer, would be subject to the tax imposed by 26 U.S.C. 4181;

(vi) Aircraft, aircraft engines, propellers, or appliances (as defined in 49 U.S.C. 40102(a));

(vii) Boats which could be subjected to safety regulation under 46 U.S.C. chapter 43; vessels, and appurtenances to vessels (other than such boats), which could be subjected to safety regulation under title 52 of the Revised Statutes or other marine safety statutes administered by the department in which the Coast Guard is operating; and equipment (including associated equipment, as defined in 46 U.S.C. 2101(1)), to the extent that a risk of injury associated with the use of such equipment on boats or vessels could be eliminated or reduced by actions taken under any statute referred to in this definitional section;

(viii) Drugs, devices, or cosmetics (as such terms are defined in 21 U.S.C. 321(g), (h), and (i)); or

(ix) Food (the term ''food'' means all ''food,'' as defined in 21 U.S.C. 321(f), including poultry and poultry products (as defined in 21 U.S.C. 453(e) and (f)), meat, meat food products (as defined in 21 U.S.C. 601(j)), and eggs and egg products (as defined in 21 U.S.C. 1033)).

(f) *CPSIA* means Section 219 of the Consumer Product Safety Improvement Act of 2008, Public Law 110–314, 122 Stat. 3016 (Aug. 14, 2008) (codified at 15 U.S.C. 2087).

(g) *Distributor* means a person to whom a consumer product is delivered or sold for purposes of distribution in commerce, except that such term does

not include a manufacturer or retailer of such product.

(h) *Employee* means an individual presently or formerly working for, an individual applying to work for, or an individual whose employment could be affected by a manufacturer, private labeler, distributor, or retailer.

(i) *Manufacturer* means any person who manufactures or imports a consumer product. A product is manufactured if it is manufactured, produced, or assembled.

(j) *OSHA* means the Occupational Safety and Health Administration of the United States Department of Labor.

(k) *Private labeler* means an owner of a brand or trademark on the label of a consumer product which bears a private label. A consumer product bears a private label if:

(1) The product (or its container) is labeled with the brand or trademark of a person other than a manufacturer of the product,

(2) The person with whose brand or trademark the product (or container) is labeled has authorized or caused the product to be so labeled, and

(3) The brand or trademark of a manufacturer of such product does not appear on such label.

(l) *Retailer* means a person to whom a consumer product is delivered or sold for purposes of sale or distribution by such person to a consumer.

(m) *Respondent* means the employer named in the complaint who is alleged to have violated CPSIA.

(n) *Secretary* means the Secretary of Labor or person to whom authority under CPSIA has been delegated.

(o) Any future statutory amendments that affect the definition of a term or terms listed in this section will apply in lieu of the definition stated herein.

§ 1983.102 Obligations and prohibited acts.

(a) No manufacturer, private labeler, distributor, or retailer may discharge or otherwise retaliate against, including, but not limited to, intimidating, threatening, restraining, coercing, blacklisting or disciplining, any employee with respect to the employee's compensation, terms, conditions, or privileges of employment because the employee, whether at the employee's initiative or in the ordinary course of the employee's duties (or any person acting pursuant to a request of the employee), engaged in any of the activities specified in paragraphs (b)(1) through (4) of this section.

(b) An employee is protected against retaliation (as described in paragraph (a) of this section) by a manufacturer, private labeler, distributor, or retailer because the employee (or any person acting pursuant to a request of the employee):

(1) Provided, caused to be provided, or is about to provide or cause to be provided to the employer, the Federal Government, or the attorney general of a State information relating to any violation of, or any act or omission the employee reasonably believes to be a violation of any provision of the Consumer Product Safety Act, as amended by CPSIA, or any other Act enforced by the Commission, or any order, rule, regulation, standard, or ban under any such Acts;

(2) Testified or is about to testify in a proceeding concerning such violation;

(3) Assisted or participated or is about to assist or participate in such a proceeding; or

(4) Objected to, or refused to participate in, any activity, policy, practice, or assigned task that the employee (or other such person) reasonably believed to be in violation of any provision of the Consumer Product Safety Act, as amended by CPSIA, or any other Act enforced by the Commission, or any order, rule, regulation, standard, or ban under any such Acts.

(c) This part shall have no application with respect to an employee of a manufacturer, private labeler, distributor, or retailer who, acting without direction from such manufacturer, private labeler, distributor, or retailer (or such person's agent), deliberately causes a violation of any requirement relating to any violation or alleged violation of any order, regulation, or consumer product safety standard under the Consumer Product Safety Act, as amended by CPSIA, or any other law enforced by the Commission.

§ 1983.103 Filing of retaliation complaint.

(a) *Who may file.* An employee who believes that he or she has been retaliated against by a manufacturer, private labeler, distributor, or retailer in violation of CPSIA may file, or have filed by any person on the employee's behalf, a complaint alleging such retaliation.

(b) *Nature of filing.* No particular form of complaint is required. A complaint may be filed orally or in writing. Oral complaints will be reduced to writing by OSHA. If the complainant is unable to file the complaint in English, OSHA will accept the complaint in any language.

(c) *Place of filing.* The complaint should be filed with the OSHA office responsible for enforcement activities in the geographical area where the employee resides or was employed, but may be filed with any OSHA officer or employee. Addresses and telephone numbers for these officials are set forth in local directories and at the following Internet address: *http://www.osha.gov.*

(d) *Time for filing.* Within 180 days after an alleged violation of CPSIA occurs, any employee who believes that he or she has been retaliated against in violation of CPSIA may file, or have filed by any person on the employee's behalf, a complaint alleging such retaliation. The date of the postmark, facsimile transmittal, electronic communication transmittal, telephone call, hand-delivery, delivery to a third-party commercial carrier, or in-person filing at an OSHA office will be considered the date of filing. The time for filing a complaint may be tolled for reasons warranted by applicable case law.

§ 1983.104 Investigation.

(a) Upon receipt of a complaint in the investigating office, the Assistant Secretary will notify the respondent of the filing of the complaint, of the allegations contained in the complaint, and of the substance of the evidence supporting the complaint. Such materials will be redacted, if necessary, in accordance with the Privacy Act of 1974, 5 U.S.C. 552a, and other applicable confidentiality laws. The Assistant Secretary will also notify the respondent of its rights under paragraphs (b) and (f) of this section and § 1983.110(e). The Assistant Secretary will provide an unredacted copy of these same materials to the complainant (or the complainant's legal counsel if complainant is represented by counsel), and to the Consumer Product Safety Commission.

(b) Within 20 days of receipt of the notice of the filing of the complaint provided under paragraph (a) of this section, the respondent and the complainant each may submit to the Assistant Secretary a written statement and any affidavits or documents substantiating its position. Within the same 20 days, the respondent and the complainant each may request a meeting with the Assistant Secretary to present its position.

(c) Throughout the investigation, the agency will provide to the complainant (or the complainant's legal counsel if complainant is represented by counsel) a copy of all of respondent's submissions to the agency that are responsive to the complainant's whistleblower complaint. Before providing such materials to the complainant, the agency will redact them, if necessary, in accordance with the Privacy Act of 1974, 5 U.S.C. 552a, and other applicable confidentiality laws. The agency will also provide the complainant with an opportunity to respond to such submissions.

(d) Investigations will be conducted in a manner that protects the confidentiality of any person who provides information on a confidential basis, other than the complainant, in accordance with part 70 of this title.

(e)(1) A complaint will be dismissed unless the complainant has made a prima facie showing that protected activity was a contributing factor in the adverse action alleged in the complaint.

(2) The complaint, supplemented as appropriate by interviews of the complainant, must allege the existence of facts and evidence to make a prima facie showing as follows:

(i) The employee engaged in a protected activity;

(ii) The respondent knew or suspected that the employee engaged in the protected activity;

(iii) The employee suffered an adverse action; and

(iv) The circumstances were sufficient to raise the inference that the protected activity was a contributing factor in the adverse action.

(3) For purposes of determining whether to investigate, the complainant will be considered to have met the required burden if the complaint on its face, supplemented as appropriate through interviews of the complainant, alleges the existence of facts and either direct or circumstantial evidence to meet the required showing, *i.e.*, to give rise to an inference that the respondent knew or suspected that the employee engaged in protected activity and that the protected activity was a contributing factor in the adverse action. The burden may be satisfied, for example, if the complaint shows that the adverse action took place shortly after the protected activity, giving rise to the inference that it was a contributing factor in the adverse action. If the required showing has not been made, the complainant (or the complainant's legal counsel if complainant is represented by counsel) will be so notified and the investigation will not commence.

(4) Notwithstanding a finding that a complainant has made a prima facie showing, as required by this section, an investigation of the complaint will not be conducted or will be discontinued if the respondent demonstrates by clear and convincing evidence that it would have taken the same adverse action in the absence of the complainant's protected activity.

(5) If the respondent fails to make a timely response or fails to satisfy the burden set forth in the prior paragraph, the Assistant Secretary will proceed with the investigation. The investigation will proceed whenever it is necessary or appropriate to confirm or verify the information provided by the respondent.

(f) Prior to the issuance of findings and a preliminary order as provided for in § 1983.105, if the Assistant Secretary has reasonable cause, on the basis of information gathered under the procedures of this part, to believe that the respondent has violated CPSIA and that preliminary reinstatement is warranted, the Assistant Secretary will again contact the respondent (or the respondent's legal counsel if respondent is represented by counsel) to give notice of the substance of the relevant evidence supporting the complainant's allegations as developed during the course of the investigation. This evidence includes any witness statements, which will be redacted to protect the identity of confidential informants where statements were given in confidence; if the statements cannot be redacted without revealing the identity of confidential informants, summaries of their contents will be provided. The complainant will also receive a copy of the materials that must be provided to the respondent under this paragraph. Before providing such materials to the complainant, the agency will redact them, if necessary, in accordance with the Privacy Act of 1974, 5 U.S.C. 552a, and other applicable confidentiality laws. The respondent will be given the opportunity to submit a written response, to meet with the investigators, to present statements from witnesses in support of its position, and to present legal and factual arguments. The respondent must present this evidence within 10 business days of the Assistant Secretary's notification pursuant to this paragraph, or as soon thereafter as the Assistant Secretary and the respondent can agree, if the interests of justice so require.

§ 1983.105 Issuance of findings and preliminary orders.

(a) After considering all the relevant information collected during the investigation, the Assistant Secretary will issue, within 60 days of the filing of the complaint, written findings as to whether or not there is reasonable cause to believe that the respondent has retaliated against the complainant in violation of CPSIA.

(1) If the Assistant Secretary concludes that there is reasonable cause to believe that a violation has occurred, the Assistant Secretary will accompany the findings with a preliminary order providing relief to the complainant. The preliminary order will require, where appropriate: affirmative action to abate the violation; reinstatement of the complainant to his or her former position, together with the compensation (including back pay and

interest), terms, conditions and privileges of the complainant's employment; and payment of compensatory damages, including, at the request of the complainant, the aggregate amount of all costs and expenses (including attorney's and expert witness fees) reasonably incurred. Interest on back pay will be calculated using the interest rate applicable to underpayment of taxes under 26 U.S.C. 6621 and will be compounded daily.

(2) If the Assistant Secretary concludes that a violation has not occurred, the Assistant Secretary will notify the parties of that finding.

(b) The findings and, where appropriate, the preliminary order will be sent by certified mail, return receipt requested, to all parties of record (and each party's legal counsel if the party is represented by counsel). The findings and, where appropriate, the preliminary order will inform the parties of the right to object to the findings and/or order and to request a hearing, and of the right of the respondent to request an award of attorney's fees not exceeding $1,000 from the ALJ, regardless of whether the respondent has filed objections, if the respondent alleges that the complaint was frivolous or brought in bad faith. The findings and, where appropriate, the preliminary order also will give the address of the Chief Administrative Law Judge, U.S. Department of Labor. At the same time, the Assistant Secretary will file with the Chief Administrative Law Judge a copy of the original complaint and a copy of the findings and/or order.

(c) The findings and any preliminary order will be effective 30 days after receipt by the respondent (or the respondent's legal counsel if the respondent is represented by counsel), or on the compliance date set forth in the preliminary order, whichever is later, unless an objection and/or a request for hearing has been timely filed as provided at § 1983.106. However, the portion of any preliminary order requiring reinstatement will be effective immediately upon the respondent's receipt of the findings and the preliminary order, regardless of any objections to the findings and/or the order.

Subpart B—Litigation

§ 1983.106 Objections to the findings and the preliminary order and requests for a hearing.

(a) Any party who desires review, including judicial review, of the findings and/or preliminary order, or a respondent alleging that the complaint was frivolous or brought in bad faith who seeks an award of attorney's fees under CPSIA, must file any objections and/or a request for a hearing on the record within 30 days of receipt of the findings and preliminary order pursuant to § 1983.105. The objections, request for a hearing, and/or request for attorney's fees must be in writing and state whether the objections are to the findings, the preliminary order, and/or whether there should be an award of attorney's fees. The date of the postmark, facsimile transmittal, or electronic communication transmittal is considered the date of filing; if the objection is filed in person, by hand-delivery or other means, the objection is filed upon receipt. Objections must be filed with the Chief Administrative Law Judge, U.S. Department of Labor, and copies of the objections must be mailed at the same time to the other parties of record, the OSHA official who issued the findings and order, the Assistant Secretary, and the Associate Solicitor, Division of Fair Labor Standards, U.S. Department of Labor.

(b) If a timely objection is filed, all provisions of the preliminary order will be stayed, except for the portion requiring preliminary reinstatement, which will not be automatically stayed. The portion of the preliminary order requiring reinstatement will be effective immediately upon the respondent's receipt of the findings and preliminary order, regardless of any objections to the order. The respondent may file a motion with the Office of Administrative Law Judges for a stay of the Assistant Secretary's preliminary order of reinstatement, which shall be granted only based on exceptional circumstances. If no timely objection is filed with respect to either the findings or the preliminary order, the findings and/or the preliminary order will become the final decision of

the Secretary, not subject to judicial review.

§ 1983.107 Hearings.

(a) Except as provided in this part, proceedings will be conducted in accordance with the rules of practice and procedure for administrative hearings before the Office of Administrative Law Judges, codified at subpart A of part 18 of this title.

(b) Upon receipt of an objection and request for hearing, the Chief Administrative Law Judge will promptly assign the case to an ALJ who will notify the parties, by certified mail, of the day, time, and place of hearing. The hearing is to commence expeditiously, except upon a showing of good cause or unless otherwise agreed to by the parties. Hearings will be conducted de novo on the record. ALJs have broad discretion to limit discovery in order to expedite the hearing.

(c) If both the complainant and the respondent object to the findings and/or order, the objections will be consolidated and a single hearing will be conducted.

(d) Formal rules of evidence will not apply, but rules or principles designed to assure production of the most probative evidence will be applied. The ALJ may exclude evidence that is immaterial, irrelevant, or unduly repetitious.

§ 1983.108 Role of Federal agencies.

(a)(1) The complainant and the respondent will be parties in every proceeding and must be served with copies of all documents in the case. At the Assistant Secretary's discretion, the Assistant Secretary may participate as a party or as amicus curiae at any time at any stage of the proceeding. This right to participate includes, but is not limited to, the right to petition for review of a decision of an ALJ, including a decision approving or rejecting a settlement agreement between the complainant and the respondent.

(2) Copies of documents must be sent to the Assistant Secretary and to the Associate Solicitor, Division of Fair Labor Standards, U.S. Department of Labor, only upon request of the Assistant Secretary, or where the Assistant Secretary is participating in the proceeding, or where service on the Assistant Secretary and the Associate Solicitor is otherwise required by these rules.

(b) The Consumer Product Safety Commission, if interested in a proceeding, may participate as amicus curiae at any time in the proceeding, at the Commission's discretion. At the request of the Commission, copies of all documents in a case must be sent to the Commission, whether or not it is participating in the proceeding.

§ 1983.109 Decision and orders of the administrative law judge.

(a) The decision of the ALJ will contain appropriate findings, conclusions, and an order pertaining to the remedies provided in paragraph (d) of this section, as appropriate. A determination that a violation has occurred may be made only if the complainant has demonstrated by a preponderance of the evidence that protected activity was a contributing factor in the adverse action alleged in the complaint.

(b) If the complainant has satisfied the burden set forth in the prior paragraph, relief may not be ordered if the respondent demonstrates by clear and convincing evidence that it would have taken the same adverse action in the absence of any protected activity.

(c) Neither the Assistant Secretary's determination to dismiss a complaint without completing an investigation pursuant to § 1983.104(e) nor the Assistant Secretary's determination to proceed with an investigation is subject to review by the ALJ, and a complaint may not be remanded for the completion of an investigation or for additional findings on the basis that a determination to dismiss was made in error. Rather, if there otherwise is jurisdiction, the ALJ will hear the case on the merits or dispose of the matter without a hearing if the facts and circumstances warrant.

(d)(1) If the ALJ concludes that the respondent has violated the law, the ALJ will issue an order that will require, where appropriate: affirmative action to abate the violation; reinstatement of the complainant to his or her former position, together with the compensation (including back pay and

interest), terms, conditions, and privileges of the complainant's employment; and payment of compensatory damages, including, at the request of the complainant, the aggregate amount of all costs and expenses (including attorney's and expert witness fees) reasonably incurred. Interest on back pay will be calculated using the interest rate applicable to underpayment of taxes under 26 U.S.C. 6621 and will be compounded daily.

(2) If the ALJ determines that the respondent has not violated the law, an order will be issued denying the complaint. If, upon the request of the respondent, the ALJ determines that a complaint was frivolous or was brought in bad faith, the ALJ may award to the respondent a reasonable attorney's fee, not exceeding $1,000.

(e) The decision will be served upon all parties to the proceeding, the Assistant Secretary, and the Associate Solicitor, Division of Fair Labor Standards, U.S. Department of Labor. Any ALJ's decision requiring reinstatement or lifting an order of reinstatement by the Assistant Secretary will be effective immediately upon receipt of the decision by the respondent. All other portions of the ALJ's order will be effective 14 days after the date of the decision unless a timely petition for review has been filed with the Administrative Review Board (ARB), U.S. Department of Labor. The decision of the ALJ will become the final order of the Secretary unless a petition for review is timely filed with the ARB and the ARB accepts the petition for review.

§ 1983.110 Decision and orders of the Administrative Review Board.

(a) Any party desiring to seek review, including judicial review, of a decision of the ALJ, or a respondent alleging that the complaint was frivolous or brought in bad faith who seeks an award of attorney's fees, must file a written petition for review with the ARB, which has been delegated the authority to act for the Secretary and issue final decisions under this part. The parties should identify in their petitions for review the legal conclusions or orders to which they object, or the objections may be deemed waived. A petition must be filed within 14 days of the date of the decision of the ALJ. The date of the postmark, facsimile transmittal, or electronic communication transmittal will be considered to be the date of filing; if the petition is filed in person, by hand-delivery or other means, the petition is considered filed upon receipt. The petition must be served on all parties and on the Chief Administrative Law Judge at the time it is filed with the ARB. Copies of the petition for review must be served on the Assistant Secretary and on the Associate Solicitor, Division of Fair Labor Standards, U.S. Department of Labor.

(b) If a timely petition for review is filed pursuant to paragraph (a) of this section, the decision of the ALJ will become the final order of the Secretary unless the ARB, within 30 days of the filing of the petition, issues an order notifying the parties that the case has been accepted for review. If a case is accepted for review, the decision of the ALJ will be inoperative unless and until the ARB issues an order adopting the decision, except that any order of reinstatement will be effective while review is conducted by the ARB, unless the ARB grants a motion by the respondent to stay that order based on exceptional circumstances. The ARB will specify the terms under which any briefs are to be filed. The ARB will review the factual determinations of the ALJ under the substantial evidence standard. If no timely petition for review is filed, or the ARB denies review, the decision of the ALJ will become the final order of the Secretary. If no timely petition for review is filed, the resulting final order is not subject to judicial review.

(c) The final decision of the ARB will be issued within 120 days of the conclusion of the hearing, which will be deemed to be 14 days after the date of the decision of the ALJ, unless a motion for reconsideration has been filed with the ALJ in the interim. In such case, the conclusion of the hearing is the date the motion for reconsideration is ruled upon or 14 days after a new decision is issued. The ARB's final decision will be served upon all parties and the Chief Administrative Law Judge by mail. The final decision will also be

served on the Assistant Secretary and on the Associate Solicitor, Division of Fair Labor Standards, U.S. Department of Labor, even if the Assistant Secretary is not a party.

(d) If the ARB concludes that the respondent has violated the law, the ARB will issue a final order providing relief to the complainant. The final order will require, where appropriate: affirmative action to abate the violation; reinstatement of the complainant to his or her former position, together with the compensation (including back pay and interest), terms, conditions, and privileges of the complainant's employment; and payment of compensatory damages, including, at the request of the complainant, the aggregate amount of all costs and expenses (including attorney's and expert witness fees) reasonably incurred. Interest on back pay will be calculated using the interest rate applicable to underpayment of taxes under 26 U.S.C. 6621 and will be compounded daily.

(e) If the ARB determines that the respondent has not violated the law, an order will be issued denying the complaint. If, upon the request of the respondent, the ARB determines that a complaint was frivolous or was brought in bad faith, the ARB may award to the respondent a reasonable attorney's fee, not exceeding $1,000.

Subpart C—Miscellaneous Provisions

§ 1983.111 Withdrawal of complaints, findings, objections, and petitions for review; settlement.

(a) At any time prior to the filing of objections to the Assistant Secretary's findings and/or preliminary order, a complainant may withdraw his or her complaint by notifying the Assistant Secretary, orally or in writing, of his or her withdrawal. The Assistant Secretary then will confirm in writing the complainant's desire to withdraw and determine whether to approve the withdrawal. The Assistant Secretary will notify the parties (and each party's legal counsel if the party is represented by counsel) of the approval of any withdrawal. If the complaint is withdrawn because of settlement, the settlement must be submitted for approval in accordance with paragraph (d) of this section. A complainant may not withdraw his or her complaint after the filing of objections to the Assistant Secretary's findings and/or preliminary order.

(b) The Assistant Secretary may withdraw the findings and/or preliminary order at any time before the expiration of the 30-day objection period described in § 1983.106, provided that no objection has been filed yet, and substitute new findings and/or a new preliminary order. The date of the receipt of the substituted findings or order will begin a new 30-day objection period.

(c) At any time before the Assistant Secretary's findings and/or order become final, a party may withdraw objections to the Assistant Secretary's findings and/or order by filing a written withdrawal with the ALJ. If the case is on review with the ARB, a party may withdraw a petition for review of an ALJ's decision at any time before that decision becomes final by filing a written withdrawal with the ARB. The ALJ or the ARB, as the case may be, will determine whether to approve the withdrawal of the objections or the petition for review. If the ALJ approves a request to withdraw objections to the Assistant Secretary's findings and/or order, and there are no other pending objections, the Assistant Secretary's findings and/or order will become the final order of the Secretary. If the ARB approves a request to withdraw a petition for review of an ALJ decision, and there are no other pending petitions for review of that decision, the ALJ's decision will become the final order of the Secretary. If objections or a petition for review are withdrawn because of settlement, the settlement must be submitted for approval in accordance with paragraph (d) of this section.

(d)(1) *Investigative settlements.* At any time after the filing of a complaint, and before the findings and/or order are objected to or become a final order by operation of law, the case may be settled if the Assistant Secretary, the complainant, and the respondent agree to a settlement. The Assistant Secretary's approval of a settlement reached by the respondent and the

complainant demonstrates the Assistant Secretary's consent and achieves the consent of all three parties.

(2) *Adjudicatory settlements.* At any time after the filing of objections to the Assistant Secretary's findings and/or order, the case may be settled if the participating parties agree to a settlement and the settlement is approved by the ALJ if the case is before the ALJ, or by the ARB if the ARB has accepted the case for review. A copy of the settlement will be filed with the ALJ or the ARB, as the case may be.

(e) Any settlement approved by the Assistant Secretary, the ALJ, or the ARB will constitute the final order of the Secretary and may be enforced in United States district court pursuant to § 1983.113.

§ 1983.112 Judicial review.

(a) Within 60 days after the issuance of a final order under §§ 1983.109 and 1983.110, any person adversely affected or aggrieved by the order may file a petition for review of the order in the United States Court of Appeals for the circuit in which the violation allegedly occurred or the circuit in which the complainant resided on the date of the violation.

(b) A final order is not subject to judicial review in any criminal or other civil proceeding.

(c) If a timely petition for review is filed, the record of a case, including the record of proceedings before the ALJ, will be transmitted by the ARB or the ALJ, as the case may be, to the appropriate court pursuant to the Federal Rules of Appellate Procedure and the local rules of such court.

§ 1983.113 Judicial enforcement.

Whenever any person has failed to comply with a preliminary order of reinstatement, or a final order, including one approving a settlement agreement, issued under CPSIA, the Secretary or a person on whose behalf the order was issued may file a civil action seeking enforcement of the order in the United States district court for the district in which the violation was found to have occurred. The Secretary also may file a civil action seeking enforcement of the order in the United States district court for the District of Columbia. In civil actions under this section, the district court will have jurisdiction to grant all appropriate relief, including, but not limited to, injunctive relief and compensatory damages, including:

(a) Reinstatement with the same seniority status that the employee would have had, but for the discharge or retaliation;

(b) The amount of back pay, with interest; and

(c) Compensation for any special damages sustained as a result of the discharge or retaliation, including litigation costs, expert witness fees, and reasonable attorney's fees.

§ 1983.114 District court jurisdiction of retaliation complaints.

(a) The complainant may bring an action at law or equity for de novo review in the appropriate district court of the United States, which will have jurisdiction over such an action without regard to the amount in controversy, either:

(1) Within 90 days after receiving a written determination under § 1983.105(a) provided that there has been no final decision of the Secretary; or

(2) If there has been no final decision of the Secretary within 210 days of the filing of the complaint.

(3) At the request of either party, the action shall be tried by the court with a jury.

(b) Within seven days after filing a complaint in federal court, a complainant must file with the Assistant Secretary, the ALJ, or the ARB, depending on where the proceeding is pending, a copy of the file-stamped complaint. A copy of the complaint also must be served on the OSHA official who issued the findings and/or preliminary order, the Assistant Secretary, and the Associate Solicitor, Division of Fair Labor Standards, U.S. Department of Labor.

§ 1983.115 Special circumstances; waiver of rules.

In special circumstances not contemplated by the provisions of these rules, or for good cause shown, the ALJ or the ARB on review may, upon application, after three days notice to all parties, waive any rule or issue such

orders that justice or the administration of CPSIA requires.

PART 1984—PROCEDURES FOR THE HANDLING OF RETALIATION COMPLAINTS UNDER SECTION 1558 OF THE AFFORDABLE CARE ACT

Subpart A—Complaints, Investigations, Findings and Preliminary Orders

Sec.
1984.100 Purpose and scope.
1984.101 Definitions.
1984.102 Obligations and prohibited acts.
1984.103 Filing of retaliation complaint.
1984.104 Investigation.
1984.105 Issuance of findings and preliminary orders.

Subpart B—Litigation

1984.106 Objections to the findings and the preliminary order and requests for a hearing.
1984.107 Hearings.
1984.108 Role of Federal agencies.
1984.109 Decision and orders of the administrative law judge.
1984.110 Decision and orders of the Administrative Review Board.

Subpart C—Miscellaneous Provisions

1984.111 Withdrawal of complaints, findings, objections, and petitions for review; settlement.
1984.112 Judicial review.
1984.113 Judicial enforcement.
1984.114 District court jurisdiction of retaliation complaints.
1984.115 Special circumstances; waiver of rules.

AUTHORITY: 29 U.S.C. 218C; Secretary's Order 1–2012 (Jan. 18, 2012), 77 FR 3912 (Jan. 25, 2012); Secretary's Order 1–2010 (Jan. 15, 2010), 75 FR 3924 (Jan. 25, 2010).

SOURCE: 78 FR 13231, Feb. 27, 2013, unless otherwise noted.

Subpart A—Complaints, Investigations, Findings and Preliminary Orders

§ 1984.100 Purpose and scope.

(a) This part implements procedures under section 1558 of the Patient Protection and Affordable Care Act, Public Law 111–148, 124 Stat. 119, which was signed into law on March 23, 2010 and was amended by the Health Care and Education Reconciliation Act of 2010, Public Law 111–152, 124 Stat. 1029, signed into law on March 30, 2010. The terms ''Affordable Care Act'' or ''the Act'' are used in this part to refer to the final, amended version of the law. Section 1558 of the Act amended the Fair Labor Standards Act, 29 U.S.C. 201 *et seq.* (FLSA) by adding new section 18C. 29 U.S.C. 218C. Section 18C of the FLSA provides protection for an employee from retaliation because the employee has received a credit under section 36B of the Internal Revenue Code of 1986, 26 U.S.C. 36B, or a cost-sharing reduction (referred to as a ''subsidy'' in section 18C) under the Affordable Care Act section 1402, 42 U.S.C. 18071, or because the employee has engaged in protected activity pertaining to title I of the Affordable Care Act or any amendment made by title I of the Affordable Care Act.

(b) This part establishes procedures under section 18C of the FLSA for the expeditious handling of retaliation complaints filed by employees, or by persons acting on their behalf. These rules, together with those codified at 29 CFR part 18, set forth the procedures under section 18C of the FLSA for submission of complaints, investigations, issuance of findings and preliminary orders, objections to findings and orders, litigation before administrative law judges (ALJs), post-hearing administrative review, and withdrawals and settlements.

§ 1984.101 Definitions.

As used in this part:

(a) *Affordable Care Act or ''the Act''* means The Patient Protection and Affordable Care Act, Public Law 111–148, 124 Stat. 119 (Mar. 23, 2010), as amended by the Health Care and Education Reconciliation Act of 2010, Public Law 111–152.

(b) *Assistant Secretary* means the Assistant Secretary of Labor for Occupational Safety and Health or the person or persons to whom he or she delegates authority under section 18C of the FLSA.

(c) *Business days* means days other than Saturdays, Sundays, and Federal holidays.

(d) *Complainant* means the employee who filed an FLSA section 18C complaint or on whose behalf a complaint was filed.

(e)(1) *Employee* means any individual employed by an employer. In the case of an individual employed by a public agency, the term employee means any individual employed by the Government of the United States: As a civilian in the military departments (as defined in 5 U.S.C. 102), in any executive agency (as defined in 5 U.S.C. 105), in any unit of the judicial branch of the Government which has positions in the competitive service, in a nonappropriated fund instrumentality under the jurisdiction of the Armed Forces, in the Library of Congress, or in the Government Printing Office. The term employee also means any individual employed by the United States Postal Service or the Postal Regulatory Commission; and any individual employed by a State, political subdivision of a State, or an interstate governmental agency, other than an individual who is not subject to the civil service laws of the State, political subdivision, or agency which employs him; and who holds a public elective office of that State, political subdivision, or agency, is selected by the holder of such an office to be a member of his personal staff, is appointed by such an officeholder to serve on a policymaking level, is an immediate adviser to such an officeholder with respect to the constitutional or legal powers of his office, or is an employee in the legislative branch or legislative body of that State, political subdivision, or agency and is not employed by the legislative library of such State, political subdivision, or agency.

(2) The term *employee* does not include:

(i) Any individual who volunteers to perform services for a public agency which is a State, a political subdivision of a State, or an interstate governmental agency, if the individual receives no compensation or is paid expenses, reasonable benefits, or a nominal fee to perform the services for which the individual volunteered—and such services are not the same type of services which the individual is employed to perform for such public agency;

(ii) Any employee of a public agency which is a State, political subdivision of a State, or an interstate governmental agency that volunteers to perform services for any other State, political subdivision, or interstate governmental agency, including a State, political subdivision or agency with which the employing State, political subdivision, or agency has a mutual aid agreement; or

(iii) Any individual who volunteers their services solely for humanitarian purposes to private non-profit food banks and who receive groceries from the food banks.

(3) The term employee includes former employees and applicants for employment.

(f) *Employer* includes any person acting directly or indirectly in the interest of an employer in relation to an employee and includes a public agency, but does not include any labor organization (other than when acting as an employer) or anyone acting in the capacity of officer or agent of such labor organization.

(g) *OSHA* means the Occupational Safety and Health Administration of the United States Department of Labor.

(h) *Person* means an individual, partnership, association, corporation, business trust, legal representative, or any organized group of persons.

(i) *Respondent* means the employer named in the complaint who is alleged to have violated the Act.

(j) *Secretary* means the Secretary of Labor or person to whom authority under the Affordable Care Act has been delegated.

(k) Any future statutory amendments that affect the definition of a term or terms listed in this section will apply in lieu of the definition stated herein.

§ 1984.102 Obligations and prohibited acts.

(a) No employer may discharge or otherwise retaliate against, including, but not limited to, intimidating, threatening, restraining, coercing, blacklisting or disciplining, any employee with respect to the employee's

compensation, terms, conditions, or privileges of employment because the employee (or an individual acting at the request of the employee), has engaged in any of the activities specified in paragraphs (b)(1) through (5) of this section.

(b) An employee is protected against retaliation because the employee (or an individual acting at the request of the employee) has:

(1) Received a credit under section 36B of the Internal Revenue Code of 1986, 26 U.S.C. 36B, or a subsidy under section 1402 of the Affordable Care Act, 42 U.S.C. 18071;

(2) Provided, caused to be provided, or is about to provide or cause to be provided to the employer, the Federal Government, or the attorney general of a State information relating to any violation of, or any act or omission the employee reasonably believes to be a violation of, any provision of title I of the Affordable Care Act (or an amendment made by title I of the Affordable Care Act);

(3) Testified or is about to testify in a proceeding concerning such violation;

(4) Assisted or participated, or is about to assist or participate, in such a proceeding; or

(5) Objected to, or refused to participate in, any activity, policy, practice, or assigned task that the employee (or other such person) reasonably believed to be in violation of any provision of title I of the Affordable Care Act (or amendment), or any order, rule, regulation, standard, or ban under title I of the Affordable Care Act (or amendment).

§ 1984.103 Filing of retaliation complaint.

(a) *Who may file.* An employee who believes that he or she has been retaliated against in violation of section 18C of the FLSA may file, or have filed by any person on the employee's behalf, a complaint alleging such retaliation.

(b) *Nature of filing.* No particular form of complaint is required. A complaint may be filed orally or in writing. Oral complaints will be reduced to writing by OSHA. If the complainant is unable to file the complaint in English, OSHA will accept the complaint in any language.

(c) *Place of filing.* The complaint should be filed with the OSHA office responsible for enforcement activities in the geographical area where the employee resides or was employed, but may be filed with any OSHA officer or employee. Addresses and telephone numbers for these officials are set forth in local directories and at the following Internet address: *http://www.osha.gov.*

(d) *Time for filing.* Within 180 days after an alleged violation of section 18C of the FLSA occurs, any employee who believes that he or she has been retaliated against in violation of that section may file, or have filed by any person on the employee's behalf, a complaint alleging such retaliation. The date of the postmark, facsimile transmittal, electronic communication transmittal, telephone call, hand-delivery, delivery to a third-party commercial carrier, or in-person filing at an OSHA office will be considered the date of filing. The time for filing a complaint may be tolled for reasons warranted by applicable case law.

§ 1984.104 Investigation.

(a) Upon receipt of a complaint in the investigating office, the Assistant Secretary will notify the respondent of the filing of the complaint, of the allegations contained in the complaint, and of the substance of the evidence supporting the complaint. Such materials will be redacted, if necessary, in accordance with the Privacy Act of 1974, 5 U.S.C. 552a, and other applicable confidentiality laws. The Assistant Secretary will also notify the respondent of its rights under paragraphs (b) and (f) of this section and paragraph (e) of § 1984.110. The Assistant Secretary will provide an unredacted copy of these same materials to the complainant (or complainant's legal counsel if complainant is represented by counsel) and to the appropriate office of the Federal agency charged with the administration of the general provisions of the Affordable Care Act under which the complaint is filed: Either the Internal Revenue Service of the United States Department of the Treasury (IRS), the United States Department of Health

and Human Services (HHS), or the Employee Benefits Security Administration of the United States Department of Labor (EBSA).

(b) Within 20 days of receipt of the notice of the filing of the complaint provided under paragraph (a) of this section, the respondent and the complainant each may submit to the Assistant Secretary a written statement and any affidavits or documents substantiating its position. Within the same 20 days, the respondent and the complainant each may request a meeting with the Assistant Secretary to present its position.

(c) Throughout the investigation, the Agency will provide to the complainant (or the complainant's legal counsel if complainant is represented by counsel) a copy of all of respondent's submissions to the Agency that are responsive to the complainant's whistleblower complaint. Before providing such materials to the complainant, the Agency will redact them, if necessary, in accordance with the Privacy Act of 1974, 5 U.S.C. 552a, and other applicable confidentiality laws. The Agency will also provide the complainant with an opportunity to respond to such submissions.

(d) Investigations will be conducted in a manner that protects the confidentiality of any person who provides information on a confidential basis, other than the complainant, in accordance with part 70 of this title.

(e)(1) A complaint will be dismissed unless the complainant has made a prima facie showing that protected activity was a contributing factor in the adverse action alleged in the complaint.

(2) The complaint, supplemented as appropriate by interviews of the complainant, must allege the existence of facts and evidence to make a prima facie showing as follows:

(i) The employee engaged in a protected activity;

(ii) The respondent knew or suspected that the employee engaged in the protected activity;

(iii) The employee suffered an adverse action; and

(iv) The circumstances were sufficient to raise the inference that the protected activity was a contributing factor in the adverse action.

(3) For purposes of determining whether to investigate, the complainant will be considered to have met the required burden if the complaint on its face, supplemented as appropriate through interviews of the complainant, alleges the existence of facts and either direct or circumstantial evidence to meet the required showing, i.e., to give rise to an inference that the respondent knew or suspected that the employee engaged in protected activity and that the protected activity was a contributing factor in the adverse action. The burden may be satisfied, for example, if the complaint shows that the adverse action took place shortly after the protected activity, giving rise to the inference that it was a contributing factor in the adverse action. If the required showing has not been made, the complainant (or the complainant's legal counsel, if complainant is represented by counsel) will be so notified and the investigation will not commence.

(4) Notwithstanding a finding that a complainant has made a prima facie showing, as required by this section, an investigation of the complaint will not be conducted or will be discontinued if the respondent demonstrates by clear and convincing evidence that it would have taken the same adverse action in the absence of the complainant's protected activity.

(5) If the respondent fails to make a timely response or fails to satisfy the burden set forth in the prior paragraph, the Assistant Secretary will proceed with the investigation. The investigation will proceed whenever it is necessary or appropriate to confirm or verify the information provided by the respondent.

(f) Prior to the issuance of findings and a preliminary order as provided for in § 1984.105, if the Assistant Secretary has reasonable cause, on the basis of information gathered under the procedures of this part, to believe that the respondent has violated section 18C of the FLSA and that preliminary reinstatement is warranted, the Assistant Secretary will again contact the respondent (or the respondent's legal counsel if respondent is represented by counsel) to give notice of the substance of the relevant evidence supporting the

complainant's allegations as developed during the course of the investigation. This evidence includes any witness statements, which will be redacted to protect the identity of confidential informants where statements were given in confidence; if the statements cannot be redacted without revealing the identity of confidential informants, summaries of their contents will be provided. The complainant will also receive a copy of the materials that must be provided to the respondent under this paragraph. Before providing such materials to the complainant, the Agency will redact them, if necessary, in accordance with the Privacy Act of 1974, 5 U.S.C. 552a, and other applicable confidentiality laws. The respondent will be given the opportunity to submit a written response, to meet with the investigators, to present statements from witnesses in support of its position, and to present legal and factual arguments. The respondent must present this evidence within 10 business days of the Assistant Secretary's notification pursuant to this paragraph, or as soon thereafter as the Assistant Secretary and the respondent can agree, if the interests of justice so require.

§ 1984.105 Issuance of findings and preliminary orders.

(a) After considering all the relevant information collected during the investigation, the Assistant Secretary will issue, within 60 days of the filing of the complaint, written findings as to whether or not there is reasonable cause to believe that the respondent has retaliated against the complainant in violation of section 18C of the FLSA.

(1) If the Assistant Secretary concludes that there is reasonable cause to believe that a violation has occurred, the Assistant Secretary will accompany the findings with a preliminary order providing relief to the complainant. The preliminary order will require, where appropriate: Affirmative action to abate the violation; reinstatement of the complainant to his or her former position, together with the compensation (including back pay and interest), terms, conditions and privileges of the complainant's employment; and payment of compensatory damages, including, at the request of the complainant, the aggregate amount of all costs and expenses (including attorney's and expert witness fees) reasonably incurred. Interest on back pay will be calculated using the interest rate applicable to underpayment of taxes under 26 U.S.C. 6621 and will be compounded daily.

(2) If the Assistant Secretary concludes that a violation has not occurred, the Assistant Secretary will notify the parties of that finding.

(b) The findings and, where appropriate, the preliminary order will be sent by certified mail, return receipt requested, to all parties of record (and each party's legal counsel if the party is represented by counsel). The findings and, where appropriate, the preliminary order will inform the parties of the right to object to the findings and/or order and to request a hearing, and of the right of the respondent to request an award of attorney's fees not exceeding $1,000 from the ALJ, regardless of whether the respondent has filed objections, if respondent alleges that the complaint was frivolous or brought in bad faith. The findings and, where appropriate, the preliminary order also will give the address of the Chief Administrative Law Judge, U.S. Department of Labor. At the same time, the Assistant Secretary will file with the Chief Administrative Law Judge a copy of the original complaint and a copy of the findings and/or order.

(c) The findings and any preliminary order will be effective 30 days after receipt by the respondent (or the respondent's legal counsel if the respondent is represented by counsel), or on the compliance date set forth in the preliminary order, whichever is later, unless an objection and/or a request for hearing has been timely filed as provided at § 1984.106. However, the portion of any preliminary order requiring reinstatement will be effective immediately upon the respondent's receipt of the findings and the preliminary order, regardless of any objections to the findings and/or the order.

Subpart B—Litigation

§ 1984.106 Objections to the findings and the preliminary order and requests for a hearing.

(a) Any party who desires review, including judicial review, of the findings and/or preliminary order, or a respondent alleging that the complaint was frivolous or brought in bad faith who seeks an award of attorney's fees under section 18C of the FLSA, must file any objections and/or a request for a hearing on the record within 30 days of receipt of the findings and preliminary order pursuant to § 1984.105. The objections, request for a hearing, and/or request for attorney's fees must be in writing and state whether the objections are to the findings, the preliminary order, and/or whether there should be an award of attorney's fees. The date of the postmark, facsimile transmittal, or electronic communication transmittal is considered the date of filing; if the objection is filed in person, by hand delivery or other means, the objection is filed upon receipt. Objections must be filed with the Chief Administrative Law Judge, U.S. Department of Labor, and copies of the objections must be mailed at the same time to the other parties of record, the OSHA official who issued the findings and order, the Assistant Secretary, and the Associate Solicitor, Division of Fair Labor Standards, U.S. Department of Labor.

(b) If a timely objection is filed, all provisions of the preliminary order will be stayed, except for the portion requiring preliminary reinstatement, which will not be automatically stayed. The portion of the preliminary order requiring reinstatement will be effective immediately upon the respondent's receipt of the findings and preliminary order, regardless of any objections to the order. The respondent may file a motion with the Office of Administrative Law Judges for a stay of the Assistant Secretary's preliminary order of reinstatement, which shall be granted only based on exceptional circumstances. If no timely objection is filed with respect to either the findings or the preliminary order, the findings and/or the preliminary order will become the final decision of the Secretary, not subject to judicial review.

§ 1984.107 Hearings.

(a) Except as provided in this part, proceedings will be conducted in accordance with the rules of practice and procedure for administrative hearings before the Office of Administrative Law Judges, codified at subpart A of part 18 of this title.

(b) Upon receipt of an objection and request for hearing, the Chief Administrative Law Judge will promptly assign the case to an ALJ who will notify the parties, by certified mail, of the day, time, and place of hearing. The hearing is to commence expeditiously, except upon a showing of good cause or unless otherwise agreed to by the parties. Hearings will be conducted de novo on the record. ALJs have broad discretion to limit discovery in order to expedite the hearing.

(c) If both the complainant and the respondent object to the findings and/or order, the objections will be consolidated and a single hearing will be conducted.

(d) Formal rules of evidence will not apply, but rules or principles designed to assure production of the most probative evidence will be applied. The ALJ may exclude evidence that is immaterial, irrelevant, or unduly repetitious.

§ 1984.108 Role of Federal agencies.

(a)(1) The complainant and the respondent will be parties in every proceeding and must be served with copies of all documents in the case. At the Assistant Secretary's discretion, the Assistant Secretary may participate as a party or as amicus curiae at any time at any stage of the proceeding. This right to participate includes, but is not limited to, the right to petition for review of a decision of an ALJ, including a decision approving or rejecting a settlement agreement between the complainant and the respondent.

(2) Copies of documents must be sent to the Assistant Secretary, and to the Associate Solicitor, Division of Fair Labor Standards, U.S. Department of Labor, only upon request of the Assistant Secretary, or where the Assistant

Secretary is participating in the proceeding, or where service on the Assistant Secretary and the Associate Solicitor is otherwise required by these rules.

(b) The IRS, HHS, and EBSA, if interested in a proceeding, may participate as amicus curiae at any time in the proceeding, at those agencies' discretion. At the request of the interested Federal agency, copies of all documents in a case must be sent to the Federal agency, whether or not the agency is participating in the proceeding.

§ 1984.109 Decision and orders of the administrative law judge.

(a) The decision of the ALJ will contain appropriate findings, conclusions, and an order pertaining to the remedies provided in paragraph (d) of this section, as appropriate. A determination that a violation has occurred may be made only if the complainant has demonstrated by a preponderance of the evidence that protected activity was a contributing factor in the adverse action alleged in the complaint.

(b) If the complainant has satisfied the burden set forth in the prior paragraph, relief may not be ordered if the respondent demonstrates by clear and convincing evidence that it would have taken the same adverse action in the absence of any protected activity.

(c) Neither the Assistant Secretary's determination to dismiss a complaint without completing an investigation pursuant to § 1984.104(e) nor the Assistant Secretary's determination to proceed with an investigation is subject to review by the ALJ, and a complaint may not be remanded for the completion of an investigation or for additional findings on the basis that a determination to dismiss was made in error. Rather, if there otherwise is jurisdiction, the ALJ will hear the case on the merits or dispose of the matter without a hearing if the facts and circumstances warrant.

(d)(1) If the ALJ concludes that the respondent has violated the law, the ALJ will issue an order that will require, where appropriate: Affirmative action to abate the violation; reinstatement of the complainant to his or her former position, together with the compensation (including back pay and interest), terms, conditions, and privileges of the complainant's employment; and payment of compensatory damages, including, at the request of the complainant, the aggregate amount of all costs and expenses (including attorney's and expert witness fees) reasonably incurred. Interest on back pay will be calculated using the interest rate applicable to underpayment of taxes under 26 U.S.C. 6621 and will be compounded daily.

(2) If the ALJ determines that the respondent has not violated the law, an order will be issued denying the complaint. If, upon the request of the respondent, the ALJ determines that a complaint was frivolous or was brought in bad faith, the ALJ may award to the respondent a reasonable attorney's fee, not exceeding $1,000.

(e) The decision will be served upon all parties to the proceeding, the Assistant Secretary, and the Associate Solicitor, Division of Fair Labor Standards, U.S. Department of Labor. Any ALJ's decision requiring reinstatement or lifting an order of reinstatement by the Assistant Secretary will be effective immediately upon receipt of the decision by the respondent. All other portions of the ALJ's order will be effective 14 days after the date of the decision unless a timely petition for review has been filed with the Administrative Review Board (ARB), U.S. Department of Labor. The decision of the ALJ will become the final order of the Secretary unless a petition for review is timely filed with the ARB and the ARB accepts the petition for review.

§ 1984.110 Decision and orders of the Administrative Review Board.

(a) Any party desiring to seek review, including judicial review, of a decision of the ALJ, or a respondent alleging that the complaint was frivolous or brought in bad faith who seeks an award of attorney's fees, must file a written petition for review with the ARB, which has been delegated the authority to act for the Secretary and issue final decisions under this part. The parties should identify in their petitions for review the legal conclusions or orders to which they object, or the

objections may be deemed waived. A petition must be filed within 14 days of the date of the decision of the ALJ. The date of the postmark, facsimile transmittal, or electronic communication transmittal will be considered to be the date of filing; if the petition is filed in person, by hand delivery or other means, the petition is considered filed upon receipt. The petition must be served on all parties and on the Chief Administrative Law Judge at the time it is filed with the ARB. Copies of the petition for review must be served on the Assistant Secretary, and on the Associate Solicitor, Division of Fair Labor Standards, U.S. Department of Labor.

(b) If a timely petition for review is filed pursuant to paragraph (a) of this section, the decision of the ALJ will become the final order of the Secretary unless the ARB, within 30 days of the filing of the petition, issues an order notifying the parties that the case has been accepted for review. If a case is accepted for review, the decision of the ALJ will be inoperative unless and until the ARB issues an order adopting the decision, except that any order of reinstatement will be effective while review is conducted by the ARB, unless the ARB grants a motion by the respondent to stay that order based on exceptional circumstances. The ARB will specify the terms under which any briefs are to be filed. The ARB will review the factual determinations of the ALJ under the substantial evidence standard. If no timely petition for review is filed, or the ARB denies review, the decision of the ALJ will become the final order of the Secretary. If no timely petition for review is filed, the resulting final order is not subject to judicial review.

(c) The final decision of the ARB will be issued within 120 days of the conclusion of the hearing, which will be deemed to be 14 days after the date of the decision of the ALJ, unless a motion for reconsideration has been filed with the ALJ in the interim. In such case, the conclusion of the hearing is the date the motion for reconsideration is ruled upon or 14 days after a new decision is issued. The ARB's final decision will be served upon all parties and the Chief Administrative Law Judge by mail. The final decision will also be served on the Assistant Secretary, and on the Associate Solicitor, Division of Fair Labor Standards, U.S. Department of Labor, even if the Assistant Secretary is not a party.

(d) If the ARB concludes that the respondent has violated the law, the ARB will issue a final order providing relief to the complainant. The final order will require, where appropriate: Affirmative action to abate the violation; reinstatement of the complainant to the complainant's former position, together with the compensation (including back pay and interest), terms, conditions, and privileges of the complainant's employment; and payment of compensatory damages, including, at the request of the complainant, the aggregate amount of all costs and expenses (including attorney's and expert witness fees) reasonably incurred. Interest on back pay will be calculated using the interest rate applicable to underpayment of taxes under 26 U.S.C. 6621 and will be compounded daily.

(e) If the ARB determines that the respondent has not violated the law, an order will be issued denying the complaint. If, upon the request of the respondent, the ARB determines that a complaint was frivolous or was brought in bad faith, the ARB may award to the respondent a reasonable attorney's fee, not exceeding $1,000.

Subpart C—Miscellaneous Provisions

§ 1984.111 Withdrawal of complaints, findings, objections, and petitions for review; settlement.

(a) At any time prior to the filing of objections to the Assistant Secretary's findings and/or preliminary order, a complainant may withdraw his or her complaint by notifying the Assistant Secretary, orally or in writing, of his or her withdrawal. The Assistant Secretary then will confirm in writing the complainant's desire to withdraw and determine whether to approve the withdrawal. The Assistant Secretary will notify the parties (and each party's legal counsel if the party is represented by counsel) of the approval of any withdrawal. If the complaint is withdrawn because of settlement, the

settlement must be submitted for approval in accordance with paragraph (d) of this section. A complainant may not withdraw his or her complaint after the filing of objections to the Assistant Secretary's findings and/or preliminary order.

(b) The Assistant Secretary may withdraw the findings and/or preliminary order at any time before the expiration of the 30-day objection period described in § 1984.106, provided that no objection has been filed yet, and substitute new findings and/or a new preliminary order. The date of the receipt of the substituted findings or order will begin a new 30-day objection period.

(c) At any time before the Assistant Secretary's findings and/or order become final, a party may withdraw objections to the Assistant Secretary's findings and/or order by filing a written withdrawal with the ALJ. If the case is on review with the ARB, a party may withdraw a petition for review of an ALJ's decision at any time before that decision becomes final by filing a written withdrawal with the ARB. The ALJ or the ARB, as the case may be, will determine whether to approve the withdrawal of the objections or the petition for review. If the ALJ approves a request to withdraw objections to the Assistant Secretary's findings and/or order, and there are no other pending objections, the Assistant Secretary's findings and/or order will become the final order of the Secretary. If the ARB approves a request to withdraw a petition for review of an ALJ decision, and there are no other pending petitions for review of that decision, the ALJ's decision will become the final order of the Secretary. If objections or a petition for review are withdrawn because of settlement, the settlement must be submitted for approval in accordance with paragraph (d) of this section.

(d)(1) *Investigative settlements.* At any time after the filing of a complaint, and before the findings and/or order are objected to or become a final order by operation of law, the case may be settled if the Assistant Secretary, the complainant, and the respondent agree to a settlement. The Assistant Secretary's approval of a settlement reached by the respondent and the complainant demonstrates the Assistant Secretary's consent and achieves the consent of all three parties.

(2) *Adjudicatory settlements.* At any time after the filing of objections to the Assistant Secretary's findings and/or order, the case may be settled if the participating parties agree to a settlement and the settlement is approved by the ALJ if the case is before the ALJ, or by the ARB if the ARB has accepted the case for review. A copy of the settlement will be filed with the ALJ or the ARB, as the case may be.

(e) Any settlement approved by the Assistant Secretary, the ALJ, or the ARB will constitute the final order of the Secretary and may be enforced in United States district court pursuant to § 1984.113.

§ 1984.112 Judicial review.

(a) Within 60 days after the issuance of a final order under §§ 1984.109 and 1984.110, any person adversely affected or aggrieved by the order may file a petition for review of the order in the United States Court of Appeals for the circuit in which the violation allegedly occurred or the circuit in which the complainant resided on the date of the violation.

(b) A final order is not subject to judicial review in any criminal or other civil proceeding.

(c) If a timely petition for review is filed, the record of a case, including the record of proceedings before the ALJ, will be transmitted by the ARB or the ALJ, as the case may be, to the appropriate court pursuant to the Federal Rules of Appellate Procedure and the local rules of such court.

§ 1984.113 Judicial enforcement.

Whenever any person has failed to comply with a preliminary order of reinstatement, or a final order, including one approving a settlement agreement, issued under section 18C of the FLSA, the Secretary or a person on whose behalf the order was issued may file a civil action seeking enforcement of the order in the United States district court for the district in which the violation was found to have occurred. The Secretary also may file a civil action seeking enforcement of the order in the United States district court for the District of Columbia.

§ 1984.114 District court jurisdiction of retaliation complaints.

(a) The complainant may bring an action at law or equity for de novo review in the appropriate district court of the United States, which will have jurisdiction over such an action without regard to the amount in controversy, either:

(1) Within 90 days after receiving a written determination under § 1984.105(a) provided that there has been no final decision of the Secretary; or

(2) If there has been no final decision of the Secretary within 210 days of the filing of the complaint.

(3) At the request of either party, the action shall be tried by the court with a jury.

(b) A proceeding under paragraph (a) of this section shall be governed by the same legal burdens of proof specified in section 1984.109. The court shall have jurisdiction to grant all relief necessary to make the employee whole, including injunctive relief and compensatory damages, including:

(1) Reinstatement with the same seniority status that the employee would have had, but for the discharge or discrimination;

(2) The amount of back pay, with interest; and

(3) Compensation for any special damages sustained as a result of the discharge or discrimination, including litigation costs, expert witness fees, and reasonable attorney fees.

(c) Within seven days after filing a complaint in federal court, a complainant must file with the Assistant Secretary, the ALJ, or the ARB, depending on where the proceeding is pending, a copy of the file-stamped complaint. A copy of the complaint also must be served on the OSHA official who issued the findings and/or preliminary order, the Assistant Secretary, and the Associate Solicitor, Division of Fair Labor Standards, U.S. Department of Labor.

§ 1984.115 Special circumstances; waiver of rules.

In special circumstances not contemplated by the provisions of these rules, or for good cause shown, the ALJ or the ARB on review may, upon application, after three- days notice to all parties, waive any rule or issue such orders that justice or the administration of section 18C of the FLSA requires.

PART 1985—PROCEDURES FOR HANDLING RETALIATION COMPLAINTS UNDER THE EMPLOYEE PROTECTION PROVISION OF THE CONSUMER FINANCIAL PROTECTION ACT OF 2010

SOURCE: 79 FR 18639, Apr. 3, 2014, unless otherwise noted.

Subpart A—Complaints, Investigations, Findings, and Preliminary Orders

Sec.
1985.100 Purpose and scope.
1985.101 Definitions.
1985.102 Obligations and prohibited acts.
1985.103 Filing of retaliation complaint.
1985.104 Investigation.
1985.105 Issuance of findings and preliminary orders.

Subpart B—Litigation

1985.106 Objections to the findings and the preliminary order and requests for a hearing.
1985.107 Hearings.
1985.108 Role of Federal agencies.
1985.109 Decision and orders of the administrative law judge.
1985.110 Decision and orders of the Administrative Review Board.

Subpart C—Miscellaneous Provisions

1985.111 Withdrawal of complaints, findings, objections, and petitions for review; settlement.
1985.112 Judicial review.
1985.113 Judicial enforcement.
1985.114 District court jurisdiction of retaliation complaints.
1985.115 Special circumstances; waiver of rules.

AUTHORITY: 12 U.S.C. 5567; Secretary of Labor's Order No. 1–2012 (Jan. 18, 2012), 77 FR 3912 (Jan. 25, 2012); Secretary of Labor's Order No. 2–2012, 77 Fed. Reg. 69378 (Nov. 16, 2012).

Subpart A—Complaints, Investigations, Findings, and Preliminary Orders

§ 1985.100 Purpose and scope.

(a) This part implements procedures of the employee protection provision of the Consumer Financial Protection Act of 2010, Section 1057 of the Dodd-Frank Wall Street Reform and Consumer Protection Act of 2010 (CFPA or the Act), Public Law 111–203, 124 Stat. 1376, 1955 (July 21, 2010) (codified at 12 U.S.C. 5567). CFPA provides for employee protection from retaliation because the employee has engaged in protected activity pertaining to the offering or provision of consumer financial products or services.

(b) This part establishes procedures under CFPA for the expeditious handling of retaliation complaints filed by employees, or by persons acting on their behalf, and sets forth OSHA's interpretations of CFPA. These rules, together with those codified at 29 CFR part 18, set forth the procedures under CFPA for submission of complaints, investigations, issuance of findings and preliminary orders, objections to findings and orders, litigation before administrative law judges (ALJs), post-hearing administrative review, and withdrawals and settlements.

§ 1985.101 Definitions.

As used in this part:

(a) *Affiliate* means any person that controls, is controlled by, or is under common control with another person.

(b) *Assistant Secretary* means the Assistant Secretary of Labor for Occupational Safety and Health or the person or persons to whom he or she delegates authority under CFPA.

(c) *Bureau* means the Bureau of Consumer Financial Protection.

(d) *Business days* means days other than Saturdays, Sundays, and Federal holidays.

(e) *CFPA* means Section 1057 of the Dodd-Frank Wall Street Reform and Consumer Protection Act of 2010, Public Law 111–203, 124 Stat. 1376, 1955 (July 21, 2010) (codified at 12 U.S.C. 5567).

(f) *Complainant* means the person who filed a CFPA complaint or on whose behalf a complaint was filed.

(g) *Consumer* means an individual or an agent, trustee, or representative acting on behalf of an individual.

(h) *Consumer financial product or service* means any financial product or service that is:

(1) Described in one or more categories in 12 U.S.C. 5481(15) and is offered or provided for use by consumers primarily for personal, family, or household purposes; or

(2) Described in clause (i), (iii), (ix), or (x) of 12 U.S.C. 5481(15)(A), and is delivered, offered, or provided in connection with a consumer financial product or service referred to in paragraph (h)(1) of this section.

(i) *Covered employee* means any individual performing tasks related to the offering or provision of a consumer financial product or service. The term ''covered employee'' includes an individual presently or formerly working for, an individual applying to work for, or an individual whose employment could be affected by a covered person or service provider where such individual was performing tasks related to the offering or provision of a consumer financial product or service at the time that the individual engaged in protected activity under CFPA.

(j) *Covered person* means—

(1) Any person that engages in offering or providing a consumer financial product or service, or

(2) Any affiliate of such a person if such affiliate acts as a service provider to such person, or

(3) Any service provider to the extent that such person engages in the offering or provision of its own consumer financial product or service.

(k) *Federal consumer financial law* means any law described in 12 U.S.C. 5481(14).

(l) *OSHA* means the Occupational Safety and Health Administration of the United States Department of Labor.

(m) *Person* means an individual, partnership, company, corporation, association (incorporated or unincorporated), trust, estate, cooperative organization, or other entity.

(n) *Respondent* means the person named in the complaint who is alleged to have violated the Act.

(o) *Secretary* means the Secretary of Labor or person to whom authority under CFPA has been delegated.

(p) *Service provider* means any person that provides a material service to a covered person in connection with the offering or provision by such covered person of a consumer financial product or service, including a person that—

(1) Participates in designing, operating, or maintaining the consumer financial product or service; or

(2) Processes transactions relating to the consumer financial product or service (other than unknowingly or incidentally transmitting or processing financial data in a manner that such data is undifferentiated from other types of data of the same form as the person transmits or processes);

(3) The term ''service provider'' does not include a person solely by virtue of such person offering or providing to a covered person:

(i) A support service of a type provided to businesses generally or a similar ministerial service; or

(ii) Time or space for an advertisement for a consumer financial product or service through print, newspaper, or electronic media.

(q) Any future statutory amendments that affect the definition of a term or terms listed in this section will apply in lieu of the definition stated herein.

§ 1985.102 Obligations and prohibited acts.

(a) No covered person or service provider may terminate or in any other way retaliate against, or cause to be terminated or retaliated against, including, but not limited to, intimidating, threatening, restraining, coercing, blacklisting or disciplining, any covered employee or any authorized representative of covered employees because such employee or representative, whether at the employee's initiative or in the ordinary course of the employee's duties (or any person acting pursuant to a request of the employee), engaged in any of the activities specified in paragraphs (b)(1) through (4) of this section.

(b) A covered employee or authorized representative is protected against retaliation (as described in paragraph (a) of this section) by a covered person or service provider because he or she:

(1) Provided, caused to be provided, or is about to provide or cause to be provided to the employer, the Bureau, or any other State, local, or Federal, government authority or law enforcement agency, information relating to any violation of, or any act or omission that the employee reasonably believes to be a violation of, any provision of Title X of the Dodd-Frank Wall Street Reform and Consumer Protection Act of 2010, Public Law 111–203, 124 Stat. 1376, 1955 (July 21, 2010), or any other provision of law that is subject to the jurisdiction of the Bureau, or any rule, order, standard, or prohibition prescribed by the Bureau;

(2) Testified or will testify in any proceeding resulting from the administration or enforcement of any provision of Title X of the Dodd-Frank Wall Street Reform and Consumer Protection Act of 2010, Public Law 111–203, 124 Stat. 1376, 1955 (July 21, 2010), or any other provision of law that is subject to the jurisdiction of the Bureau, or any rule, order, standard, or prohibition prescribed by the Bureau;

(3) Filed, instituted, or caused to be filed or instituted any proceeding under any Federal consumer financial law; or

(4) Objected to, or refused to participate in, any activity, policy, practice, or assigned task that the employee (or other such person) reasonably believed to be in violation of any law, rule, order, standard, or prohibition subject to the jurisdiction of, or enforceable by, the Bureau.

§ 1985.103 Filing of retaliation complaint.

(a) *Who may file*. A person who believes that he or she has been discharged or otherwise retaliated against by any person in violation of CFPA may file, or have filed by any person on his or her behalf, a complaint alleging such retaliation.

(b) *Nature of filing*. No particular form of complaint is required. A complaint may be filed orally or in writing. Oral complaints will be reduced to writing by OSHA. If the complainant is unable to file the complaint in English,

OSHA will accept the complaint in any language.

(c) *Place of filing*. The complaint should be filed with the OSHA office responsible for enforcement activities in the geographical area where the complainant resides or was employed, but may be filed with any OSHA officer or employee. Addresses and telephone numbers for these officials are set forth in local directories and at the following Internet address: *http://www.osha.gov*.

(d) *Time for filing*. Within 180 days after an alleged violation of CFPA occurs, any person who believes that he or she has been retaliated against in violation of the Act may file, or have filed by any person on his or her behalf, a complaint alleging such retaliation. The date of the postmark, facsimile transmittal, electronic communication transmittal, telephone call, hand-delivery, delivery to a third-party commercial carrier, or in-person filing at an OSHA office will be considered the date of filing. The time for filing a complaint may be tolled for reasons warranted by applicable case law. For example, OSHA may consider the time for filing a complaint equitably tolled if a complainant mistakenly files a complaint with an agency other than OSHA within 180 days after an alleged adverse action.

§ 1985.104 Investigation.

(a) Upon receipt of a complaint in the investigating office, OSHA will notify the respondent of the filing of the complaint, of the allegations contained in the complaint, and of the substance of the evidence supporting the complaint. Such materials will be redacted, if necessary, in accordance with the Privacy Act of 1974, 5 U.S.C. 552a, and other applicable confidentiality laws. OSHA will also notify the respondent of its rights under paragraphs (b) and (f) of this section and § 1985.110(e). OSHA will provide an unredacted copy of these same materials to the complainant (or the complainant's legal counsel if complainant is represented by counsel) and to the Bureau.

(b) Within 20 days of receipt of the notice of the filing of the complaint provided under paragraph (a) of this section, the respondent and the complainant each may submit to OSHA a written statement and any affidavits or documents substantiating its position. Within the same 20 days, the respondent and the complainant each may request a meeting with OSHA to present its position.

(c) OSHA will provide to the complainant (or the complainant's legal counsel if complainant is represented by counsel) a copy of all of respondent's submissions to OSHA that are responsive to the complainant's whistleblower complaint at a time permitting the complainant an opportunity to respond. Before providing such materials to the complainant, OSHA will redact them, if necessary, in accordance with the Privacy Act of 1974, 5 U.S.C. 552a, and other applicable confidentiality laws. OSHA will also provide the complainant with an opportunity to respond to such submissions.

(d) Investigations will be conducted in a manner that protects the confidentiality of any person who provides information on a confidential basis, other than the complainant, in accordance with part 70 of this title.

(e)(1) A complaint will be dismissed unless the complainant has made a prima facie showing (*i.e.* a non-frivolous allegation) that a protected activity was a contributing factor in the adverse action alleged in the complaint.

(2) The complaint, supplemented as appropriate by interviews of the complainant, must allege the existence of facts and evidence to make a prima facie showing as follows:

(i) The employee engaged in a protected activity;

(ii) The respondent knew or suspected that the employee engaged in the protected activity;

(iii) The employee suffered an adverse action; and

(iv) The circumstances were sufficient to raise the inference that the protected activity was a contributing factor in the adverse action.

(3) For purposes of determining whether to investigate, the complainant will be considered to have met the required burden if the complaint on its face, supplemented as appropriate through interviews of the complainant, alleges the existence of facts and either direct or circumstantial evidence to

meet the required showing, *i.e.*, to give rise to an inference that the respondent knew or suspected that the employee engaged in protected activity and that the protected activity was a contributing factor in the adverse action. The burden may be satisfied, for example, if the complaint shows that the adverse action took place within a temporal proximity of the protected activity, or at the first opportunity available to the respondent, giving rise to the inference that it was a contributing factor in the adverse action. If the required showing has not been made, the complainant (or the complainant's legal counsel if complainant is represented by counsel) will be so notified and the investigation will not commence.

(4) Notwithstanding a finding that a complainant has made a prima facie showing, as required by this section, further investigation of the complaint will not be conducted if the respondent demonstrates by clear and convincing evidence that it would have taken the same adverse action in the absence of the complainant's protected activity.

(5) If the respondent fails to make a timely response or fails to satisfy the burden set forth in the prior paragraph, OSHA will proceed with the investigation. The investigation will proceed whenever it is necessary or appropriate to confirm or verify the information provided by the respondent.

(f) Prior to the issuance of findings and a preliminary order as provided for in § 1985.105, if OSHA has reasonable cause, on the basis of information gathered under the procedures of this part, to believe that the respondent has violated CFPA and that preliminary reinstatement is warranted, OSHA will contact the respondent (or the respondent's legal counsel if respondent is represented by counsel) to give notice of the substance of the relevant evidence supporting the complainant's allegations as developed during the course of the investigation. This evidence includes any witness statements, which will be redacted to protect the identity of confidential informants where statements were given in confidence; if the statements cannot be redacted without revealing the identity of confidential informants, summaries of their contents will be provided. The complainant will also receive a copy of the materials that must be provided to the respondent under this paragraph. Before providing such materials, OSHA will redact them, if necessary, in accordance with the Privacy Act of 1974, 5 U.S.C. 552a, and other applicable confidentiality laws. The respondent will be given the opportunity to submit a written response, to meet with the investigators, to present statements from witnesses in support of its position, and to present legal and factual arguments. The respondent must present this evidence within 10 business days of OSHA's notification pursuant to this paragraph, or as soon thereafter as OSHA and the respondent can agree, if the interests of justice so require.

§ 1985.105 Issuance of findings and preliminary orders.

(a) After considering all the relevant information collected during the investigation, the Assistant Secretary will issue, within 60 days of the filing of the complaint, written findings as to whether or not there is reasonable cause to believe that the respondent has retaliated against the complainant in violation of CFPA.

(1) If the Assistant Secretary concludes that there is reasonable cause to believe that a violation has occurred, the Assistant Secretary will accompany the findings with a preliminary order providing relief to the complainant. The preliminary order will require, where appropriate: affirmative action to abate the violation; reinstatement of the complainant to his or her former position, together with the compensation (including back pay and interest), terms, conditions and privileges of the complainant's employment; and payment of compensatory damages, including, at the request of the complainant, the aggregate amount of all costs and expenses (including attorney and expert witness fees) reasonably incurred. Interest on back pay will be calculated using the interest rate applicable to underpayment of taxes under 26 U.S.C. 6621

and will be compounded daily. The preliminary order will also require the respondent to submit appropriate documentation to the Social Security Administration (SSA) allocating any back pay award to the appropriate calendar quarters.

(2) If the Assistant Secretary concludes that a violation has not occurred, the Assistant Secretary will notify the parties of that finding.

(b) The findings and, where appropriate, the preliminary order will be sent by certified mail, return receipt requested (or other means that allow OSHA to confirm receipt), to all parties of record (and each party's legal counsel if the party is represented by counsel). The findings and, where appropriate, the preliminary order will inform the parties of the right to object to the findings and/or order and to request a hearing, and of the right of the respondent to request an award of attorney fees not exceeding $1,000 from the ALJ, regardless of whether the respondent has filed objections, if the respondent alleges that the complaint was frivolous or brought in bad faith. The findings and, where appropriate, the preliminary order also will give the address of the Chief Administrative Law Judge, U.S. Department of Labor. At the same time, the Assistant Secretary will file with the Chief Administrative Law Judge a copy of the original complaint and a copy of the findings and/or order.

(c) The findings and any preliminary order will be effective 30 days after receipt by the respondent (or the respondent's legal counsel if the respondent is represented by counsel), or on the compliance date set forth in the preliminary order, whichever is later, unless an objection and/or a request for hearing has been timely filed as provided at § 1985.106. However, the portion of any preliminary order requiring reinstatement will be effective immediately upon the respondent's receipt of the findings and the preliminary order, regardless of any objections to the findings and/or the order.

Subpart B—Litigation

§ 1985.106 Objections to the findings and the preliminary order and requests for a hearing.

(a) Any party who desires review, including judicial review, of the findings and/or preliminary order, or a respondent alleging that the complaint was frivolous or brought in bad faith who seeks an award of attorney fees under CFPA, must file any objections and/or a request for a hearing on the record within 30 days of receipt of the findings and preliminary order pursuant to § 1985.105. The objections, request for a hearing, and/or request for attorney fees must be in writing and state whether the objections are to the findings, the preliminary order, and/or whether there should be an award of attorney fees. The date of the postmark, facsimile transmittal, or electronic communication transmittal is considered the date of filing; if the objection is filed in person, by hand delivery or other means, the objection is filed upon receipt. Objections must be filed with the Chief Administrative Law Judge, U.S. Department of Labor, and copies of the objections must be mailed at the same time to the other parties of record, the OSHA official who issued the findings and order, the Assistant Secretary, and the Associate Solicitor, Division of Fair Labor Standards, U.S. Department of Labor.

(b) If a timely objection is filed, all provisions of the preliminary order will be stayed, except for the portion requiring preliminary reinstatement, which will not be automatically stayed. The portion of the preliminary order requiring reinstatement will be effective immediately upon the respondent's receipt of the findings and preliminary order, regardless of any objections to the order. The respondent may file a motion with the Office of Administrative Law Judges for a stay of the Assistant Secretary's preliminary order of reinstatement, which shall be granted only based on exceptional circumstances. If no timely objection is filed with respect to either the findings or the preliminary order, the findings and/or the preliminary order will become the final decision of

the Secretary, not subject to judicial review.

§ 1985.107 Hearings.

(a) Except as provided in this part, proceedings will be conducted in accordance with the rules of practice and procedure for administrative hearings before the Office of Administrative Law Judges, codified at subpart A of part 18 of this title.

(b) Upon receipt of an objection and request for hearing, the Chief Administrative Law Judge will promptly assign the case to an ALJ who will notify the parties, by certified mail, of the day, time, and place of hearing. The hearing is to commence expeditiously, except upon a showing of good cause or unless otherwise agreed to by the parties. Hearings will be conducted de novo on the record. ALJs have broad discretion to limit discovery in order to expedite the hearing.

(c) If both the complainant and the respondent object to the findings and/or order, the objections will be consolidated and a single hearing will be conducted.

(d) Formal rules of evidence will not apply, but rules or principles designed to assure production of the most probative evidence will be applied. The ALJ may exclude evidence that is immaterial, irrelevant, or unduly repetitious.

§ 1985.108 Role of Federal agencies.

(a)(1) The complainant and the respondent will be parties in every proceeding and must be served with copies of all documents in the case. At the Assistant Secretary's discretion, the Assistant Secretary may participate as a party or as amicus curiae at any time at any stage of the proceeding. This right to participate includes, but is not limited to, the right to petition for review of a decision of an ALJ, including a decision approving or rejecting a settlement agreement between the complainant and the respondent.

(2) Copies of documents must be sent to OSHA and to the Associate Solicitor, Division of Fair Labor Standards, U.S. Department of Labor, only upon request of OSHA, or where the Assistant Secretary is participating in the proceeding, or where service on OSHA and the Associate Solicitor is otherwise required by these rules.

(b) The Bureau, if interested in a proceeding, may participate as amicus curiae at any time in the proceeding, at the Bureau's discretion. At the request of the Bureau, copies of all documents in a case must be sent to the Bureau, whether or not it is participating in the proceeding.

§ 1985.109 Decision and orders of the administrative law judge.

(a) The decision of the ALJ will contain appropriate findings, conclusions, and an order pertaining to the remedies provided in paragraph (d) of this section, as appropriate. A determination that a violation has occurred may be made only if the complainant has demonstrated by a preponderance of the evidence that protected activity was a contributing factor in the adverse action alleged in the complaint.

(b) If the complainant has satisfied the burden set forth in the prior paragraph, relief may not be ordered if the respondent demonstrates by clear and convincing evidence that it would have taken the same adverse action in the absence of any protected activity.

(c) Neither OSHA's determination to dismiss a complaint without completing an investigation pursuant to § 1985.104(e) nor OSHA's determination to proceed with an investigation is subject to review by the ALJ, and a complaint may not be remanded for the completion of an investigation or for additional findings on the basis that a determination to dismiss was made in error. Rather, if there otherwise is jurisdiction, the ALJ will hear the case on the merits or dispose of the matter without a hearing if the facts and circumstances warrant.

(d)(1) If the ALJ concludes that the respondent has violated the law, the ALJ will issue an order that will require, where appropriate: affirmative action to abate the violation; reinstatement of the complainant to his or her former position, together with the compensation (including back pay and interest), terms, conditions, and privileges of the complainant's employment; and payment of compensatory damages, including, at the request of the complainant, the aggregate

amount of all costs and expenses (including attorney and expert witness fees) reasonably incurred. Interest on back pay will be calculated using the interest rate applicable to underpayment of taxes under 26 U.S.C. 6621 and will be compounded daily. The order will also require the respondent to submit appropriate documentation to the Social Security Administration (SSA) allocating any back pay award to the appropriate calendar quarters.

(2) If the ALJ determines that the respondent has not violated the law, an order will be issued denying the complaint. If, upon the request of the respondent, the ALJ determines that a complaint was frivolous or was brought in bad faith, the ALJ may award to the respondent reasonable attorney fees, not exceeding $1,000.

(e) The decision will be served upon all parties to the proceeding, the Assistant Secretary, and the Associate Solicitor, Division of Fair Labor Standards, U.S. Department of Labor. Any ALJ's decision requiring reinstatement or lifting an order of reinstatement by the Assistant Secretary will be effective immediately upon receipt of the decision by the respondent. All other portions of the ALJ's order will be effective 14 days after the date of the decision unless a timely petition for review has been filed with the Administrative Review Board (ARB), U.S. Department of Labor. The decision of the ALJ will become the final order of the Secretary unless a petition for review is timely filed with the ARB and the ARB accepts the petition for review.

§ 1985.110 Decision and orders of the Administrative Review Board.

(a) Any party desiring to seek review, including judicial review, of a decision of the ALJ, or a respondent alleging that the complaint was frivolous or brought in bad faith who seeks an award of attorney fees, must file a written petition for review with the ARB, which has been delegated the authority to act for the Secretary and issue final decisions under this part. The parties should identify in their petitions for review the legal conclusions or orders to which they object, or the objections may be deemed waived. A petition must be filed within 14 days of the date of the decision of the ALJ. The date of the postmark, facsimile transmittal, or electronic communication transmittal will be considered to be the date of filing; if the petition is filed in person, by hand delivery or other means, the petition is considered filed upon receipt. The petition must be served on all parties and on the Chief Administrative Law Judge at the time it is filed with the ARB. Copies of the petition for review must be served on the Assistant Secretary and on the Associate Solicitor, Division of Fair Labor Standards, U.S. Department of Labor.

(b) If a timely petition for review is filed pursuant to paragraph (a) of this section, the decision of the ALJ will become the final order of the Secretary unless the ARB, within 30 days of the filing of the petition, issues an order notifying the parties that the case has been accepted for review. If a case is accepted for review, the decision of the ALJ will be inoperative unless and until the ARB issues an order adopting the decision, except that any order of reinstatement will be effective while review is conducted by the ARB, unless the ARB grants a motion by the respondent to stay that order based on exceptional circumstances. The ARB will specify the terms under which any briefs are to be filed. The ARB will review the factual determinations of the ALJ under the substantial evidence standard. If no timely petition for review is filed, or the ARB denies review, the decision of the ALJ will become the final order of the Secretary. If no timely petition for review is filed, the resulting final order is not subject to judicial review.

(c) The final decision of the ARB will be issued within 120 days of the conclusion of the hearing, which will be deemed to be 14 days after the decision of the ALJ, unless a motion for reconsideration has been filed with the ALJ in the interim. In such case, the conclusion of the hearing is the date the motion for reconsideration is ruled upon or 14 days after a new decision is issued. The ARB's final decision will be served upon all parties and the Chief Administrative Law Judge by mail. The final decision will also be served

on the Assistant Secretary and on the Associate Solicitor, Division of Fair Labor Standards, U.S. Department of Labor, even if the Assistant Secretary is not a party.

(d) If the ARB concludes that the respondent has violated the law, the ARB will issue a final order providing relief to the complainant. The final order will require, where appropriate: Affirmative action to abate the violation; reinstatement of the complainant to his or her former position, together with the compensation (including back pay and interest), terms, conditions, and privileges of the complainant's employment; and payment of compensatory damages, including, at the request of the complainant, the aggregate amount of all costs and expenses (including attorney and expert witness fees) reasonably incurred. Interest on back pay will be calculated using the interest rate applicable to underpayment of taxes under 26 U.S.C. 6621 and will be compounded daily. The order will also require the respondent to submit appropriate documentation to the Social Security Administration (SSA) allocating any back pay award to the appropriate calendar quarters.

(e) If the ARB determines that the respondent has not violated the law, an order will be issued denying the complaint. If, upon the request of the respondent, the ARB determines that a complaint was frivolous or was brought in bad faith, the ARB may award to the respondent reasonable attorney fees, not exceeding $1,000.

Subpart C—Miscellaneous Provisions

§ 1985.111 Withdrawal of complaints, findings, objections, and petitions for review; settlement.

(a) At any time prior to the filing of objections to the Assistant Secretary's findings and/or preliminary order, a complainant may withdraw his or her complaint by notifying OSHA, orally or in writing, of his or her withdrawal. OSHA then will confirm in writing the complainant's desire to withdraw and determine whether to approve the withdrawal. OSHA will notify the parties (and each party's legal counsel if the party is represented by counsel) of the approval of any withdrawal. If the complaint is withdrawn because of settlement, the settlement must be submitted for approval in accordance with paragraph (d) of this section. A complainant may not withdraw his or her complaint after the filing of objections to the Assistant Secretary's findings and/or preliminary order.

(b) The Assistant Secretary may withdraw the findings and/or preliminary order at any time before the expiration of the 30-day objection period described in § 1985.106, provided that no objection has been filed yet, and substitute new findings and/or a new preliminary order. The date of the receipt of the substituted findings or order will begin a new 30-day objection period.

(c) At any time before the Assistant Secretary's findings and/or order become final, a party may withdraw objections to the Assistant Secretary's findings and/or order by filing a written withdrawal with the ALJ. If the case is on review with the ARB, a party may withdraw a petition for review of an ALJ's decision at any time before that decision becomes final by filing a written withdrawal with the ARB. The ALJ or the ARB, as the case may be, will determine whether to approve the withdrawal of the objections or the petition for review. If the ALJ approves a request to withdraw objections to the Assistant Secretary's findings and/or order, and there are no other pending objections, the Assistant Secretary's findings and/or order will become the final order of the Secretary. If the ARB approves a request to withdraw a petition for review of an ALJ decision, and there are no other pending petitions for review of that decision, the ALJ's decision will become the final order of the Secretary. If objections or a petition for review are withdrawn because of settlement, the settlement must be submitted for approval in accordance with paragraph (d) of this section.

(d)(1) *Investigative settlements.* At any time after the filing of a complaint, but before the findings and/or order are objected to or become a final order by operation of law, the case may be settled if OSHA, the complainant, and the respondent agree to a settlement. OSHA's approval of a settlement reached by the respondent and the

complainant demonstrates OSHA's consent and achieves the consent of all three parties.

(2) *Adjudicatory settlements*. At any time after the filing of objections to the Assistant Secretary's findings and/or order, the case may be settled if the participating parties agree to a settlement and the settlement is approved by the ALJ if the case is before the ALJ, or by the ARB if the ARB has accepted the case for review. A copy of the settlement will be filed with the ALJ or the ARB, as appropriate.

(e) Any settlement approved by OSHA, the ALJ, or the ARB will constitute the final order of the Secretary and may be enforced in United States district court pursuant to § 1985.113.

§ 1985.112 Judicial review.

(a) Within 60 days after the issuance of a final order under §§ 1985.109 and 1985.110, any person adversely affected or aggrieved by the order may file a petition for review of the order in the United States Court of Appeals for the circuit in which the violation allegedly occurred or the circuit in which the complainant resided on the date of the violation.

(b) A final order is not subject to judicial review in any criminal or other civil proceeding.

(c) If a timely petition for review is filed, the record of a case, including the record of proceedings before the ALJ, will be transmitted by the ARB or the ALJ, as the case may be, to the appropriate court pursuant to the Federal Rules of Appellate Procedure and the local rules of such court.

§ 1985.113 Judicial enforcement.

Whenever any person has failed to comply with a final order, including one approving a settlement agreement, issued under CFPA, the Secretary or a person on whose behalf the order was issued may file a civil action seeking enforcement of the order in the United States district court for the district in which the violation was found to have occurred. The Secretary also may file a civil action seeking enforcement of the order in the United States district court for the District of Columbia. Whenever any person has failed to comply with a preliminary order of reinstatement, the person on whose behalf the order was issued may file a civil action seeking enforcement of the order in the appropriate district court of the United States.

§ 1985.114 District court jurisdiction of retaliation complaints.

(a) The complainant may bring an action at law or equity for de novo review in the appropriate district court of the United States, which will have jurisdiction over such an action without regard to the amount in controversy, either:

(1) Within 90 days after receiving a written determination under § 1985.105(a) provided that there has been no final decision of the Secretary; or

(2) If there has been no final decision of the Secretary within 210 days of the filing of the complaint.

(b) At the request of either party, the action shall be tried by the court with a jury.

(c) A proceeding under paragraph (a) of this section shall be governed by the same legal burdens of proof specified in § 1985.109. The court shall have jurisdiction to grant all relief necessary to make the employee whole, including injunctive relief and compensatory damages, including:

(1) Reinstatement with the same seniority status that the employee would have had, but for the discharge or discrimination;

(2) The amount of back pay, with interest;

(3) Compensation for any special damages sustained as a result of the discharge or discrimination; and

(4) Litigation costs, expert witness fees, and reasonable attorney fees.

(d) Within seven days after filing a complaint in Federal court, a complainant must file with OSHA, the ALJ, or the ARB, depending on where the proceeding is pending, a copy of the file-stamped complaint. A copy of the complaint also must be served on the OSHA official who issued the findings and/or preliminary order, the Assistant Secretary, and the Associate Solicitor, Division of Fair Labor Standards, U.S. Department of Labor.

§ 1985.115 Special circumstances; waiver of rules.

In special circumstances not contemplated by the provisions of these rules, or for good cause shown, the ALJ or the ARB on review may, upon application, after three days notice to all parties, waive any rule or issue such orders that justice or the administration of CFPA requires.

PART 1986—PROCEDURES FOR THE HANDLING OF RETALIATION COMPLAINTS UNDER THE EMPLOYEE PROTECTION PROVISION OF THE SEAMAN'S PROTECTION ACT (SPA), AS AMENDED

Subpart A—Complaints, Investigations, Findings, and Preliminary Orders

Sec.
1986.100 Purpose and scope.
1986.101 Definitions.
1986.102 Obligations and prohibited acts.
1986.103 Filing of retaliation complaints.
1986.104 Investigation.
1986.105 Issuance of findings and preliminary orders.

Subpart B—Litigation

1986.106 Objections to the findings and the preliminary order and request for a hearing.
1986.107 Hearings.
1986.108 Role of Federal agencies.
1986.109 Decisions and orders of the administrative law judge.
1986.110 Decisions and orders of the Administrative Review Board.

Subpart C—Miscellaneous Provisions

1986.111 Withdrawal of SPA complaints, findings, objections, and petitions for review; settlement.
1986.112 Judicial review.
1986.113 Judicial enforcement.
1986.114 District court jurisdiction of retaliation complaints under SPA.
1986.115 Special circumstances; waiver of rules.

AUTHORITY: 46 U.S.C. 2114; 49 U.S.C. 31105; Secretary's Order 1–2012 (Jan. 18, 2012), 77 FR 3912 (Jan. 25, 2012); Secretary's Order 1–2010 (Jan. 15, 2010), 75 FR 3924–01 (Jan. 25, 2010).

SOURCE: 78 FR 8402, Feb. 6, 2013, unless otherwise noted.

Subpart A—Complaints, Investigations, Findings, and Preliminary Orders

§ 1986.100 Purpose and scope.

(a) This part sets forth the procedures for, and interpretations of, the Seaman's Protection Act (SPA), 46 U.S.C. 2114, as amended, which protects a seaman from retaliation because the seaman has engaged in protected activity pertaining to compliance with maritime safety laws and accompanying regulations. SPA incorporates the procedures, requirements, and rights described in the whistleblower provision of the Surface Transportation Assistance Act (STAA), 49 U.S.C. 31105.

(b) This part establishes procedures pursuant to the statutory provisions set forth above for the expeditious handling of retaliation complaints filed by seamen or persons acting on their behalf. These rules, together with those rules codified at 29 CFR part 18, set forth the procedures for submission of complaints, investigations, issuance of findings and preliminary orders, objections to findings, litigation before administrative law judges (ALJs), post-hearing administrative review, withdrawals and settlements, and judicial review and enforcement. In addition, these rules provide the Secretary's interpretations on certain statutory issues.

§ 1986.101 Definitions.

As used in this part:

(a) *Act* means the Seaman's Protection Act (SPA), 46 U.S.C. 2114, as amended.

(b) *Assistant Secretary* means the Assistant Secretary of Labor for Occupational Safety and Health or the person or persons to whom he or she delegates authority under the Act.

(c) *Business days* means days other than Saturdays, Sundays, and Federal holidays.

(d) *Citizen of the United States* means:

(1) An individual who is a national of the United States as defined in section 101(a)(22) of the Immigration and Nationality Act (8 U.S.C. 1101 (a)(22)) or a corporation, partnership, association, or other business entity if the controlling interest is owned by citizens of the United States. The controlling interest

in a corporation is owned by citizens of the United States if:

(i) Title to the majority of the stock in the corporation is vested in citizens of the United States free from any trust or fiduciary obligation in favor of a person not a citizen of the United States;

(ii) The majority of the voting power in the corporation is vested in citizens of the United States;

(iii) There is no contract or understanding by which the majority of the voting power in the corporation may be exercised, directly or indirectly, in behalf of a person not a citizen of the United States; and

(iv) There is no other means by which control of the corporation is given to or permitted to be exercised by a person not a citizen of the United States.

(2) Furthermore, a corporation is only a citizen of the United States if:

(i) It is incorporated under the laws of the United States or a State;

(ii) Its chief executive officer, by whatever title, and the chairman of its board of directors are citizens of the United States; and

(iii) No more of its directors are noncitizens than a minority of the number necessary to constitute a quorum.

(e) *Complainant* means the seaman who filed a SPA whistleblower complaint or on whose behalf a complaint was filed.

(f) *Cooperated* means any assistance or participation with an investigation, at any stage of the investigation, and regardless of the outcome of the investigation.

(g) *Maritime safety law or regulation* includes any statute or regulation regarding health or safety that applies to any person or equipment on a vessel.

(h) *Notify* or *notified* includes any oral or written communications.

(i) *OSHA* means the Occupational Safety and Health Administration of the United States Department of Labor.

(j) *Person* means one or more individuals or other entities, including but not limited to corporations, companies, associations, firms, partnerships, societies, and joint stock companies.

(k) *Report* or *reported* means any oral or written communications.

(l) *Respondent* means the person alleged to have violated 46 U.S.C. 2114.

(m) *Seaman* means any individual engaged or employed in any capacity on board a vessel owned by a citizen of the United States. The term includes an individual formerly performing the work described above or an applicant for such work.

(n) *Secretary* means the Secretary of Labor or persons to whom authority under the Act has been delegated.

(o) *State* means a State of the United States, the District of Columbia, Puerto Rico, the Virgin Islands, American Samoa, Guam, and the Northern Mariana Islands.

(p) *Vessel* means every description of watercraft or other artificial contrivance used, or capable of being used, as a means of transportation on water.

(q) *Vessel owner* includes all of the agents of the owner, including the vessel's master.

(r) Any future amendments to SPA that affect the definition of a term or terms listed in this section will apply in lieu of the definition stated herein.

§ 1986.102 Obligations and prohibited acts.

(a) A person may not retaliate against any seaman because the seaman:

(1) In good faith reported or is about to report to the Coast Guard or other appropriate Federal agency or department that the seaman believes that a violation of a maritime safety law or regulation prescribed under that law or regulation has occurred;

(2) Refused to perform duties ordered by the seaman's employer because the seaman has a reasonable apprehension or expectation that performing such duties would result in serious injury to the seaman, other seamen, or the public;

(3) Testified in a proceeding brought to enforce a maritime safety law or regulation prescribed under that law;

(4) Notified, or attempted to notify, the vessel owner or the Secretary of the department in which the Coast Guard is operating of a work-related personal injury or work-related illness of a seaman;

(5) Cooperated with a safety investigation by the Secretary of the department in which the Coast Guard is operating or the National Transportation Safety Board;

(6) Furnished information to the Secretary of the department in which the Coast Guard is operating, the National Transportation Safety Board, or any other public official as to the facts relating to any marine casualty resulting in injury or death to an individual or damage to property occurring in connection with vessel transportation; or

(7) Accurately reported hours of duty under part A of subtitle II of title 46 of the United States Code.

(b) Retaliation means any discrimination against a seaman including, but is not limited to, discharging, demoting, suspending, harassing, intimidating, threatening, restraining, coercing, blacklisting, or disciplining a seaman.

(c) For purposes of paragraph (a)(2) of this section, the circumstances causing a seaman's apprehension of serious injury must be of such a nature that a reasonable person, under similar circumstances, would conclude that there is a real danger of an injury or serious impairment of health resulting from the performance of duties as ordered by the seaman's employer. To qualify for protection based on activity described in paragraph (a)(2) of this section, the seaman must have sought from the employer, and been unable to obtain, correction of the unsafe condition. Any seaman who requests such a correction shall be protected against retaliation because of the request.

§ 1986.103 Filing of retaliation complaints.

(a) *Who may file.* A seaman who believes that he or she has been retaliated against by a person in violation of SPA may file, or have filed by any person on the seaman's behalf, a complaint alleging such retaliation.

(b) *Nature of filing.* No particular form of complaint is required. A complaint may be filed orally or in writing. Oral complaints will be reduced to writing by OSHA. If a seaman is unable to file a complaint in English, OSHA will accept the complaint in any other language.

(c) *Place of filing.* The complaint should be filed with the OSHA office responsible for enforcement activities in the geographical area where the seaman resides or was employed, but may be filed with any OSHA officer or employee. Addresses and telephone numbers for these officials are set forth in local directories and at the following Internet address: *http://www.osha.gov.*

(d) *Time for filing.* Not later than 180 days after an alleged violation occurs, a seaman who believes that he or she has been retaliated against in violation of SPA may file, or have filed by any person on his or her behalf, a complaint alleging such retaliation. The date of the postmark, facsimile transmittal, electronic communication transmittal, telephone call, hand-delivery, delivery to a third-party commercial carrier, or in-person filing at an OSHA office will be considered the date of filing. The time for filing a complaint may be tolled for reasons warranted by applicable case law.

(e) *Relationship to section 11(c) complaints.* A complaint filed under SPA alleging facts that would also constitute a violation of section 11(c) of the Occupational Safety and Health Act, 29 U.S.C. 660(c), will be deemed to be a complaint under both SPA and section 11(c). Similarly, a complaint filed under section 11(c) that alleges facts that would also constitute a violation of SPA will be deemed to be a complaint filed under both SPA and section 11(c). Normal procedures and timeliness requirements under the respective statutes and regulations will be followed.

§ 1986.104 Investigation.

(a) Upon receipt of a complaint in the investigating office, the Assistant Secretary will notify the respondent of the filing of the complaint by providing the respondent with a copy of the complaint, redacted in accordance with the Privacy Act of 1974, 5 U.S.C. 552a, and other applicable confidentiality laws. The Assistant Secretary will also notify the respondent of the respondent's rights under paragraphs (b) and (f) of this section. The Assistant Secretary will provide a copy of the unredacted complaint to the complainant (or complainant's legal counsel, if complainant

is represented by counsel) and to the U.S. Coast Guard.

(b) Within 20 days of receipt of the notice of the filing of the complaint provided under paragraph (a) of this section, the respondent may submit to the Assistant Secretary a written statement and any affidavits or documents substantiating its position. Within the same 20 days, the respondent may request a meeting with the Assistant Secretary to present its position.

(c) Throughout the investigation, the Agency will provide to the complainant (or the complainant's legal counsel if complainant is represented by counsel) a copy of all of respondent's submissions to the Agency that are responsive to the complainant's whistleblower complaint. Before providing such materials to the complainant, the Agency will redact them, if necessary, in accordance with the Privacy Act of 1974, 5 U.S.C. 552a, and other applicable confidentiality laws. The Agency will also provide the complainant with an opportunity to respond to such submissions.

(d) Investigations will be conducted in a manner that protects the confidentiality of any person who provides information on a confidential basis, other than the complainant, in accordance with part 70 of this title.

(e)(1) A complaint will be dismissed unless the complainant has made a prima facie showing that protected activity was a contributing factor in the adverse action alleged in the complaint.

(2) The complaint, supplemented as appropriate by interviews of the complainant, must allege the existence of facts and evidence to make a prima facie showing as follows:

(i) The seaman engaged in a protected activity;

(ii) The respondent knew or suspected that the seaman engaged in the protected activity;

(iii) The seaman suffered an adverse action; and

(iv) The circumstances were sufficient to raise the inference that the protected activity was a contributing factor in the adverse action.

(3) For purposes of determining whether to investigate, the complainant will be considered to have met the required burden if the complaint on its face, supplemented as appropriate through interviews of the complainant, alleges the existence of facts and either direct or circumstantial evidence to meet the required showing, *i.e.*, to give rise to an inference that the respondent knew or suspected that the seaman engaged in protected activity and that the protected activity was a contributing factor in the adverse action. The burden may be satisfied, for example, if the complainant shows that the adverse action took place shortly after the protected activity, giving rise to the inference that it was a contributing factor in the adverse action. If the required showing has not been made, the complainant (or the complainant's legal counsel if complainant is represented by counsel) will be so notified and the investigation will not commence.

(4) Notwithstanding a finding that a complainant has made a prima facie showing, as required by this section, an investigation of the complaint will not be conducted or will be discontinued if the respondent demonstrates by clear and convincing evidence that it would have taken the same adverse action in the absence of the complainant's protected activity.

(5) If the respondent fails to make a timely response or fails to satisfy the burden set forth in the prior paragraph, the Assistant Secretary will proceed with the investigation. The investigation will proceed whenever it is necessary or appropriate to confirm or verify the information provided by the respondent.

(f) Prior to the issuance of findings and a preliminary order as provided for in § 1986.105, if the Assistant Secretary has reasonable cause, on the basis of information gathered under the procedures of this part, to believe that the respondent has violated the Act and that preliminary reinstatement is warranted, the Assistant Secretary will again contact the respondent (or the respondent's legal counsel, if respondent is represented by counsel) to give notice of the substance of the relevant evidence supporting the complainant's allegations as developed during the course of the investigation. This evidence includes any witness statements,

which will be redacted to protect the identity of confidential informants where statements were given in confidence; if the statements cannot be redacted without revealing the identity of confidential informants, summaries of their contents will be provided. The complainant will also receive a copy of the materials that must be provided to the respondent under this paragraph. Before providing such materials to the complainant, the Agency will redact them, if necessary, in accordance with the Privacy Act of 1974, 5 U.S.C. 552a, and other applicable confidentiality laws. The respondent will be given the opportunity to submit a written response, to meet with the investigators, to present statements from witnesses in support of its position, and to present legal and factual arguments. The respondent must present this evidence within 10 business days of the Assistant Secretary's notification pursuant to this paragraph, or as soon thereafter as the Assistant Secretary and the respondent can agree, if the interests of justice so require.

§ 1986.105 Issuance of findings and preliminary orders.

(a) After considering all the relevant information collected during the investigation, the Assistant Secretary will issue, within 60 days of the filing of the complaint, written findings as to whether there is reasonable cause to believe that the respondent retaliated against the complainant in violation of SPA.

(1) If the Assistant Secretary concludes that there is reasonable cause to believe that a violation has occurred, the Assistant Secretary will accompany the findings with a preliminary order providing relief. Such order will require, where appropriate: affirmative action to abate the violation; reinstatement of the complainant to his or her former position, with the same compensation, terms, conditions and privileges of the complainant's employment; payment of compensatory damages (back pay with interest and compensation for any special damages sustained as a result of the retaliation, including any litigation costs, expert witness fees, and reasonable attorney fees which the complainant has incurred). Interest on back pay will be calculated using the interest rate applicable to underpayment of taxes under 26 U.S.C. 6621 and will be compounded daily. The preliminary order may also require the respondent to pay punitive damages of up to $250,000.

(2) If the Assistant Secretary concludes that a violation has not occurred, the Assistant Secretary will notify the parties of that finding.

(b) The findings and, where appropriate, the preliminary order will be sent by certified mail, return receipt requested, to all parties of record (and each party's legal counsel if the party is represented by counsel). The findings and, where appropriate, the preliminary order will inform the parties of the right to object to the findings and/or the order and to request a hearing. The findings and, where appropriate, the preliminary order also will give the address of the Chief Administrative Law Judge, U.S. Department of Labor. At the same time, the Assistant Secretary will file with the Chief Administrative Law Judge, a copy of the original complaint and a copy of the findings and/or order.

(c) The findings and the preliminary order will be effective 30 days after receipt by the respondent (or the respondent's legal counsel if the respondent is represented by counsel), or on the compliance date set forth in the preliminary order, whichever is later, unless an objection and request for a hearing have been timely filed as provided at § 1986.106. However, the portion of any preliminary order requiring reinstatement will be effective immediately upon the respondent's receipt of the findings and the preliminary order, regardless of any objections to the findings and/or the order.

Subpart B—Litigation

§ 1986.106 Objections to the findings and the preliminary order and request for a hearing.

(a) Any party who desires review, including judicial review, must file any objections and a request for a hearing on the record within 30 days of receipt of the findings and preliminary order pursuant to § 1986.105(c). The objections and request for a hearing must be in

writing and state whether the objections are to the findings and/or the preliminary order. The date of the postmark, facsimile transmittal, or electronic communication transmittal is considered the date of filing; if the objection is filed in person, by hand-delivery or other means, the objection is filed upon receipt. Objections must be filed with the Chief Administrative Law Judge, U.S. Department of Labor, and copies of the objections must be mailed at the same time to the other parties of record, and the OSHA official who issued the findings.

(b) If a timely objection is filed, all provisions of the preliminary order will be stayed, except for the portion requiring preliminary reinstatement, which will not be automatically stayed. The portion of the preliminary order requiring reinstatement will be effective immediately upon the respondent's receipt of the findings and preliminary order, regardless of any objections to the order. The respondent may file a motion with the Office of Administrative Law Judges for a stay of the Assistant Secretary's preliminary order of reinstatement, which shall be granted only based on exceptional circumstances. If no timely objection is filed with respect to either the findings or the preliminary order, the findings and/or preliminary order will become the final decision of the Secretary, not subject to judicial review.

§ 1986.107 Hearings.

(a) Except as provided in this part, proceedings will be conducted in accordance with the rules of practice and procedure for administrative hearings before the Office of Administrative Law Judges, codified at subpart A of part 18 of this title.

(b) Upon receipt of an objection and request for hearing, the Chief Administrative Law Judge will promptly assign the case to an ALJ who will notify the parties, by certified mail, of the day, time, and place of hearing. The hearing is to commence expeditiously, except upon a showing of good cause or unless otherwise agreed to by the parties. Hearings will be conducted de novo on the record. ALJs have broad discretion to limit discovery in order to expedite the hearing.

(c) If both the complainant and the respondent object to the findings and/or order, the objections will be consolidated, and a single hearing will be conducted.

(d) Formal rules of evidence will not apply, but rules or principles designed to assure production of the most probative evidence will be applied. The ALJ may exclude evidence that is immaterial, irrelevant, or unduly repetitious.

§ 1986.108 Role of Federal agencies.

(a)(1) The complainant and the respondent will be parties in every proceeding. In any case in which the respondent objects to the findings or the preliminary order, the Assistant Secretary ordinarily will be the prosecuting party. In any other cases, at the Assistant Secretary's discretion, the Assistant Secretary may participate as a party or participate as amicus curiae at any stage of the proceeding. This right to participate includes, but is not limited to, the right to petition for review of a decision of an ALJ, including a decision approving or rejecting a settlement agreement between the complainant and the respondent.

(2) If the Assistant Secretary assumes the role of prosecuting party in accordance with paragraph (a)(1) of this section, he or she may, upon written notice to the ALJ or the Administrative Review Board, as the case may be, and the other parties, withdraw as the prosecuting party in the exercise of prosecutorial discretion. If the Assistant Secretary withdraws, the complainant will become the prosecuting party and the ALJ or the Administrative Review Board, as the case may be, will issue appropriate orders to regulate the course of future proceedings.

(3) Copies of documents in all cases shall be sent to all parties, or if they are represented by counsel, to the latter. In cases in which the Assistant Secretary is a party, copies of the documents shall be sent to the Regional Solicitor's Office representing the Assistant Secretary.

(b) The U.S. Coast Guard, if interested in a proceeding, may participate

as amicus curiae at any time in the proceeding, at its discretion. At the request of the U.S. Coast Guard, copies of all documents in a case must be sent to that agency, whether or not that agency is participating in the proceeding.

§ 1986.109 Decisions and orders of the administrative law judge.

(a) The decision of the ALJ will contain appropriate findings, conclusions, and an order pertaining to the remedies provided in paragraph (d) of this section, as appropriate. A determination that a violation has occurred may be made only if the complainant has demonstrated by a preponderance of the evidence that protected activity was a contributing factor in the adverse action alleged in the complaint.

(b) If the complainant or the Assistant Secretary has satisfied the burden set forth in the prior paragraph, relief may not be ordered if the respondent demonstrates by clear and convincing evidence that it would have taken the same adverse action in the absence of any protected activity.

(c) Neither the Assistant Secretary's determination to dismiss a complaint without completing an investigation pursuant to § 1986.104(e) nor the Assistant Secretary's determination to proceed with an investigation is subject to review by the ALJ, and a complaint may not be remanded for the completion of an investigation or for additional findings on the basis that a determination to dismiss was made in error. Rather, if there otherwise is jurisdiction, the ALJ will hear the case on the merits or dispose of the matter without a hearing if the facts and circumstances warrant.

(d)(1) If the ALJ concludes that the respondent has violated the law, the ALJ will issue an order that will require, where appropriate: affirmative action to abate the violation, reinstatement of the complainant to his or her former position, with the same compensation, terms, conditions, and privileges of the complainant's employment; payment of compensatory damages (back pay with interest and compensation for any special damages sustained as a result of the retaliation, including any litigation costs, expert witness fees, and reasonable attorney fees which the complainant may have incurred); and payment of punitive damages up to $250,000. Interest on back pay will be calculated using the interest rate applicable to underpayment of taxes under 26 U.S.C. 6621 and will be compounded daily.

(2) If the ALJ determines that the respondent has not violated the law, an order will be issued denying the complaint.

(e) The decision will be served upon all parties to the proceeding, the Assistant Secretary, and the Associate Solicitor, Division of Occupational Safety and Health, U.S. Department of Labor. Any ALJ's decision requiring reinstatement or lifting an order of reinstatement by the Assistant Secretary will be effective immediately upon receipt of the decision by the respondent. All other portions of the ALJ's order will be effective 14 days after the date of the decision unless a timely petition for review has been filed with the Administrative Review Board (ARB), U.S. Department of Labor. The ALJ decision will become the final order of the Secretary unless a petition for review is timely filed with the ARB and the ARB accepts the decision for review.

§ 1986.110 Decisions and orders of the Administrative Review Board.

(a) The Assistant Secretary or any other party desiring to seek review, including judicial review, of a decision of the ALJ must file a written petition for review with the ARB, which has been delegated the authority to act for the Secretary and issue final decisions under this part. The parties should identify in their petitions for review the legal conclusions or orders to which they object, or the objections may be deemed waived. A petition must be filed within 14 days of the date of the decision of the ALJ. The date of the postmark, facsimile transmittal, or electronic communication transmittal will be considered to be the date of filing; if the petition is filed in person, by hand-delivery or other means, the petition is considered filed upon receipt. The petition must be served on all parties and on the Chief Administrative Law Judge at the time it is filed with

the ARB. Copies of the petition for review and all briefs must be served on the Assistant Secretary and, in cases in which the Assistant Secretary is a party, on the Associate Solicitor, Division of Occupational Safety and Health, U.S. Department of Labor.

(b) If a timely petition for review is filed pursuant to paragraph (a) of this section, the decision of the ALJ will become the final order of the Secretary unless the ARB, within 30 days of the filing of the petition, issues an order notifying the parties that the case has been accepted for review. If a case is accepted for review, the decision of the ALJ will be inoperative unless and until the ARB issues an order adopting the decision, except that any order of reinstatement will be effective while review is conducted by the ARB unless the ARB grants a motion by the respondent to stay that order based on exceptional circumstances. The ARB will specify the terms under which any briefs are to be filed. The ARB will review the factual determinations of the ALJ under the substantial evidence standard. If no timely petition for review is filed, or the ARB denies review, the decision of the ALJ will become the final order of the Secretary. If no timely petition for review is filed, the resulting final order is not subject to judicial review.

(c) The final decision of the ARB will be issued within 120 days of the conclusion of the hearing, which will be deemed to be 14 days after the date of the decision of the ALJ, unless a motion for reconsideration has been filed with the ALJ in the interim. In such case, the conclusion of the hearing is the date the motion for reconsideration is ruled upon or 14 days after a new decision is issued. The ARB's final decision will be served upon all parties and the Chief Administrative Law Judge by mail. The final decision also will be served on the Assistant Secretary and on the Associate Solicitor, Division of Occupational Safety and Health, U.S. Department of Labor, even if the Assistant Secretary is not a party.

(d) If the ARB concludes that the respondent has violated the law, the ARB will issue a final order providing relief to the complainant. The final order will require, where appropriate: affirmative action to abate the violation; reinstatement of the complainant to his or her former position, with the same compensation, terms, conditions, and privileges of the complainant's employment; payment of compensatory damages (backpay with interest and compensation for any special damages sustained as a result of the retaliation, including any litigation costs, expert witness fees, and reasonable attorney fees the complainant may have incurred); and payment of punitive damages up to $250,000. Interest on backpay will be calculated using the interest rate applicable to underpayment of taxes under 26 U.S.C. 6621 and will be compounded daily.

(e) If the ARB determines that the respondent has not violated the law, an order will be issued denying the complaint.

Subpart C—Miscellaneous Provisions

§ 1986.111 Withdrawal of SPA complaints, findings, objections, and petitions for review; settlement.

(a) At any time prior to the filing of objections to the Assistant Secretary's findings and/or preliminary order, a complainant may withdraw his or her complaint by notifying the Assistant Secretary, orally or in writing, of his or her withdrawal. The Assistant Secretary then will confirm in writing the complainant's desire to withdraw and determine whether to approve the withdrawal. The Assistant Secretary will notify the parties (and each party's legal counsel if the party is represented by counsel) of the approval of any withdrawal. If the complaint is withdrawn because of settlement, the settlement must be submitted for approval in accordance with paragraph (d) of this section. A complainant may not withdraw his or her complaint after the filing of objections to the Assistant Secretary's findings and/or preliminary order.

(b) The Assistant Secretary may withdraw the findings and/or a preliminary order at any time before the expiration of the 30-day objection period described in § 1986.106, provided that no

objection has been filed yet, and substitute new findings and/or a new preliminary order. The date of the receipt of the substituted findings or order will begin a new 30-day objection period.

(c) At any time before the Assistant Secretary's findings and/or preliminary order become final, a party may withdraw objections to the Assistant Secretary's findings and/or preliminary order by filing a written withdrawal with the ALJ. If a case is on review with the ARB, a party may withdraw a petition for review of an ALJ's decision at any time before that decision becomes final by filing a written withdrawal with the ARB. The ALJ or the ARB, as the case may be, will determine whether to approve the withdrawal of the objections or the petition for review. If the ALJ approves a request to withdraw objections to the Assistant Secretary's findings and/or order, and there are no other pending objections, the Assistant Secretary's findings and/or order will become the final order of the Secretary. If the ARB approves a request to withdraw a petition for review of an ALJ decision, and there are no other pending petitions for review of that decision, the ALJ's decision will become the final order of the Secretary. If objections or a petition for review are withdrawn because of settlement, the settlement must be submitted for approval in accordance with paragraph (d) of this section.

(d)(1) *Investigative settlements.* At any time after the filing of a SPA complaint and before the findings and/or order are objected to or become a final order by operation of law, the case may be settled if the Assistant Secretary, the complainant, and the respondent agree to a settlement. The Assistant Secretary's approval of a settlement reached by the respondent and the complainant demonstrates the Assistant Secretary's consent and achieves the consent of all three parties.

(2) *Adjudicatory settlements.* At any time after the filing of objections to the Assistant Secretary's findings and/or order, the case may be settled if the participating parties agree to a settlement and the settlement is approved by the ALJ if the case is before the ALJ or by the ARB, if the ARB has accepted the case for review. A copy of the settlement will be filed with the ALJ or the ARB as the case may be.

(e) Any settlement approved by the Assistant Secretary, the ALJ, or the ARB will constitute the final order of the Secretary and may be enforced in a United States district court pursuant to 49 U.S.C. 31105(e), as incorporated by 46 U.S.C. 2114(b).

§ 1986.112 Judicial review.

(a) Within 60 days after the issuance of a final order under §§ 1986.109 and 1986.110, any person adversely affected or aggrieved by the order may file a petition for review of the order in the United States Court of Appeals for the circuit in which the violation allegedly occurred or the circuit in which the complainant resided on the date of the violation.

(b) A final order is not subject to judicial review in any criminal or other civil proceeding.

(c) If a timely petition for review is filed, the record of a case, including the record of proceedings before the ALJ, will be transmitted by the ARB, or the ALJ, as the case may be, to the appropriate court pursuant to the Federal Rules of Appellate Procedure and the local rules of such court.

§ 1986.113 Judicial enforcement.

Whenever any person has failed to comply with a preliminary order of reinstatement or a final order, including one approving a settlement agreement issued under SPA, the Secretary may file a civil action seeking enforcement of the order in the United States district court for the district in which the violation was found to have occurred.

§ 1986.114 District court jurisdiction of retaliation complaints under SPA.

(a) If there is no final order of the Secretary, 210 days have passed since the filing of the complaint, and there is no showing that there has been delay due to the bad faith of the complainant, the complainant may bring an action at law or equity for de novo review in the appropriate district court of the United States, which will have jurisdiction over such an action without regard to the amount in controversy. The action shall, at the request of either

party to such action, be tried by the court with a jury.

(b) Within seven days after filing a complaint in federal court, a complainant must file with the Assistant Secretary, the ALJ, or the ARB, depending on where the proceeding is pending, a copy of the file-stamped complaint. A copy of the complaint also must be served on the OSHA official who issued the findings and/or preliminary order, the Assistant Secretary, and the Associate Solicitor, Division of Occupational Safety and Health, U.S. Department of Labor.

§ 1986.115 Special circumstances; waiver of rules.

In special circumstances not contemplated by the provisions of these rules, or for good cause shown, the ALJ or the ARB on review may, upon application, after three days notice to all parties, waive any rule or issue such orders as justice or the administration of SPA requires.

PART 1987—PROCEDURES FOR HANDLING RETALIATION COMPLAINTS UNDER SECTION 402 OF THE FDA FOOD SAFETY MODERNIZATION ACT

Subpart A—Complaints, Investigations, Findings and Preliminary Orders

Sec.
1987.100 Purpose and scope.
1987.101 Definitions.
1987.102 Obligations and prohibited acts.
1987.103 Filing of retaliation complaint.
1987.104 Investigation.
1987.105 Issuance of findings and preliminary orders.

Subpart B—Litigation

1987.106 Objections to the findings and the preliminary order and requests for a hearing.
1987.107 Hearings.
1987.108 Role of Federal agencies.
1987.109 Decision and orders of the administrative law judge.
1987.110 Decision and orders of the Administrative Review Board.

Subpart C—Miscellaneous Provisions

1987.111 Withdrawal of complaints, findings, objections, and petitions for review; settlement.
1987.112 Judicial review.
1987.113 Judicial enforcement.
1987.114 District court jurisdiction of retaliation complaints.
1987.115 Special circumstances; waiver of rules.

AUTHORITY: 21 U.S.C. 399d; Secretary of Labor's Order No. 1–2012 (Jan. 18, 2012), 77 FR 3912 (Jan. 25, 2012); Secretary of Labor's Order No. 2–2012 (Oct. 19, 2012), 77 FR 69378 (Nov. 16, 2012).

SOURCE: 79 FR 8627, Feb. 13, 2014, unless otherwise noted.

Subpart A—Complaints, Investigations, Findings and Preliminary Orders

§ 1987.100 Purpose and scope.

(a) This part sets forth the procedures for, and interpretations of, section 402 of the FDA Food Safety Modernization Act (FSMA), Public Law 111–353, 124 Stat. 3885, which was signed into law on January 4, 2011. Section 402 of the FDA Food Safety Modernization Act amended the Federal Food, Drug, and Cosmetic Act (FD&C), 21 U.S.C. 301 *et seq.*, by adding new section 1012. *See* 21 U.S.C. 399d. Section 1012 of the FD&C provides protection for an employee from retaliation because the employee has engaged in protected activity pertaining to a violation or alleged violation of the FD&C, or any order, rule, regulation, standard, or ban under the FD&C.

(b) This part establishes procedures under section 1012 of the FD&C for the expeditious handling of retaliation complaints filed by employees, or by persons acting on their behalf. The rules in this part, together with those codified at 29 CFR part 18, set forth the procedures under section 1012 of the FD&C for submission of complaints, investigations, issuance of findings and preliminary orders, objections to findings and orders, litigation before administrative law judges, post-hearing administrative review, and withdrawals and settlements. In addition, the rules in this part provide the Secretary's interpretations on certain statutory issues.

§ 1987.101 Definitions.

As used in this part:

(a) *Assistant Secretary* means the Assistant Secretary of Labor for Occupational Safety and Health or the person or persons to whom he or she delegates authority under FSMA.

(b) *Business days* means days other than Saturdays, Sundays, and Federal holidays.

(c) *Complainant* means the employee who filed a complaint under FSMA or on whose behalf a complaint was filed.

(d) *Covered entity* means an entity engaged in the manufacture, processing, packing, transporting, distribution, reception, holding, or importation of food.

(e) *Employee* means an individual presently or formerly working for a covered entity, an individual applying to work for a covered entity, or an individual whose employment could be affected by a covered entity.

(f) *FD&C* means the Federal Food, Drug, and Cosmetic Act, 21 U.S.C. 301 *et seq.*, which is chapter 9 of title 21.

(g) *FDA* means the Food and Drug Administration of the United States Department of Health and Human Services.

(h) *Food* means articles used for food or drink for man or other animals, chewing gum, and articles used for components of any such article.

(i) *FSMA* means section 402 of the FDA Food Safety Modernization Act, Public Law 111–353, 124 Stat. 3885 (Jan. 4, 2011) (codified at 21 U.S.C. 399d).

(j) *OSHA* means the Occupational Safety and Health Administration of the United States Department of Labor.

(k) *Person* includes an individual, partnership, corporation, and association.

(l) *Respondent* means the employer named in the complaint who is alleged to have violated the FSMA.

(m) *Secretary* means the Secretary of Labor or person to whom authority under the FSMA has been delegated.

(n) Any future statutory amendments that affect the definition of a term or terms listed in this section will apply in lieu of the definition stated herein.

§ 1987.102 Obligations and prohibited acts.

(a) No covered entity may discharge or otherwise retaliate against, including, but not limited to, intimidating, threatening, restraining, coercing, blacklisting or disciplining, any employee with respect to the employee's compensation, terms, conditions, or privileges of employment because the employee, whether at the employee's initiative or in the ordinary course of the employee's duties (or any person acting pursuant to a request of the employee), has engaged in any of the activities specified in paragraphs (b)(1) through (4) of this section.

(b) An employee is protected against retaliation because the employee (or any person acting pursuant to a request of the employee) has:

(1) Provided, caused to be provided, or is about to provide or cause to be provided to the employer, the Federal Government, or the attorney general of a State information relating to any violation of, or any act or omission the employee reasonably believes to be a violation of any provision of the FD&C or any order, rule, regulation, standard, or ban under the FD&C;

(2) Testified or is about to testify in a proceeding concerning such violation;

(3) Assisted or participated or is about to assist or participate in such a proceeding; or

(4) Objected to, or refused to participate in, any activity, policy, practice, or assigned task that the employee (or other such person) reasonably believed to be in violation of any provision of the FD&C, or any order, rule, regulation, standard, or ban under the FD&C.

§ 1987.103 Filing of retaliation complaint.

(a) *Who may file.* An employee who believes that he or she has been retaliated against in violation of FSMA may file, or have filed by any person on the employee's behalf, a complaint alleging such retaliation.

(b) *Nature of filing.* No particular form of complaint is required. A complaint may be filed orally or in writing. Oral complaints will be reduced to writing by OSHA. If the complainant is unable to file the complaint in English,

OSHA will accept the complaint in any language.

(c) *Place of filing*. The complaint should be filed with the OSHA office responsible for enforcement activities in the geographical area where the employee resides or was employed, but may be filed with any OSHA officer or employee. Addresses and telephone numbers for these officials are set forth in local directories and at the following Internet address: *http://www.osha.gov*.

(d) *Time for filing*. Within 180 days after an alleged violation of FSMA occurs, any employee who believes that he or she has been retaliated against in violation of that section may file, or have filed by any person on the employee's behalf, a complaint alleging such retaliation. The date of the postmark, facsimile transmittal, electronic communication transmittal, telephone call, hand-delivery, delivery to a third-party commercial carrier, or in-person filing at an OSHA office will be considered the date of filing. The time for filing a complaint may be tolled for reasons warranted by applicable case law. For example, OSHA may consider the time for filing a complaint to be tolled if a complainant mistakenly files a complaint with an agency other than OSHA within 180 days after an alleged adverse action.

§ 1987.104 Investigation.

(a) Upon receipt of a complaint in the investigating office, OSHA will notify the respondent of the filing of the complaint, of the allegations contained in the complaint, and of the substance of the evidence supporting the complaint. Such materials will be redacted, if necessary, in accordance with the Privacy Act of 1974, 5 U.S.C. 552a, and other applicable confidentiality laws. OSHA will also notify the respondent of its rights under paragraphs (b) and (f) of this section and § 1987.110(e). OSHA will provide an unredacted copy of these same materials to the complainant (or the complainant's legal counsel if complainant is represented by counsel) and to the FDA.

(b) Within 20 days of receipt of the notice of the filing of the complaint provided under paragraph (a) of this section, the respondent and the complainant each may submit to OSHA a written statement and any affidavits or documents substantiating its position. Within the same 20 days, the respondent and the complainant each may request a meeting with OSHA to present its position.

(c) OSHA will provide to the complainant (or the complainant's legal counsel if complainant is represented by counsel) a copy of all of respondent's submissions to OSHA that are responsive to the complainant's whistleblower complaint at a time permitting the complainant an opportunity to respond. Before providing such materials to the complainant, OSHA will redact them, if necessary, in accordance with the Privacy Act of 1974, 5 U.S.C. 552a, and other applicable confidentiality laws. OSHA will also provide the complainant with an opportunity to respond to such submissions.

(d) Investigations will be conducted in a manner that protects the confidentiality of any person who provides information on a confidential basis, other than the complainant, in accordance with part 70 of this title.

(e)(1) A complaint will be dismissed unless the complainant has made a prima facie showing (*i.e.* a non-frivolous allegation) that a protected activity was a contributing factor in the adverse action alleged in the complaint.

(2) The complaint, supplemented as appropriate by interviews of the complainant, must allege the existence of facts and evidence to make a prima facie showing as follows:

(i) The employee engaged in a protected activity;

(ii) The respondent knew or suspected that the employee engaged in the protected activity;

(iii) The employee suffered an adverse action; and

(iv) The circumstances were sufficient to raise the inference that the protected activity was a contributing factor in the adverse action.

(3) For purposes of determining whether to investigate, the complainant will be considered to have met the required burden if the complaint on its face, supplemented as appropriate through interviews of the complainant, alleges the existence of facts and either direct or circumstantial evidence to

meet the required showing, *i.e.*, to give rise to an inference that the respondent knew or suspected that the employee engaged in protected activity and that the protected activity was a contributing factor in the adverse action. The burden may be satisfied, for example, if the complaint shows that the adverse action took place within a temporal proximity of the protected activity, or at the first opportunity available to the respondent, giving rise to the inference that it was a contributing factor in the adverse action. If the required showing has not been made, the complainant (or the complainant's legal counsel if complainant is represented by counsel) will be so notified and the investigation will not commence.

(4) Notwithstanding a finding that a complainant has made a prima facie showing, as required by this section, further investigation of the complaint will not be conducted if the respondent demonstrates by clear and convincing evidence that it would have taken the same adverse action in the absence of the complainant's protected activity.

(5) If the respondent fails to make a timely response or fails to satisfy the burden set forth in paragraph (e)(4) of this section, OSHA will proceed with the investigation. The investigation will proceed whenever it is necessary or appropriate to confirm or verify the information provided by the respondent.

(f) Prior to the issuance of findings and a preliminary order as provided for in § 1987.105, if OSHA has reasonable cause, on the basis of information gathered under the procedures of this part, to believe that the respondent has violated FSMA and that preliminary reinstatement is warranted, OSHA will contact the respondent (or the respondent's legal counsel if respondent is represented by counsel) to give notice of the substance of the relevant evidence supporting the complainant's allegations as developed during the course of the investigation. This evidence includes any witness statements, which will be redacted to protect the identity of confidential informants where statements were given in confidence; if the statements cannot be redacted without revealing the identity of confidential informants, summaries of their contents will be provided. The complainant will also receive a copy of the materials that must be provided to the respondent under this paragraph. Before providing such materials, OSHA will redact them, if necessary, in accordance with the Privacy Act of 1974, 5 U.S.C. 552a, and other applicable confidentiality laws. The respondent will be given the opportunity to submit a written response, to meet with the investigators, to present statements from witnesses in support of its position, and to present legal and factual arguments. The respondent must present this evidence within 10 business days of OSHA's notification pursuant to this paragraph, or as soon thereafter as OSHA and the respondent can agree, if the interests of justice so require.

§ 1987.105 Issuance of findings and preliminary orders.

(a) After considering all the relevant information collected during the investigation, the Assistant Secretary will issue, within 60 days of the filing of the complaint, written findings as to whether or not there is reasonable cause to believe that the respondent has retaliated against the complainant in violation of FSMA.

(1) If the Assistant Secretary concludes that there is reasonable cause to believe that a violation has occurred, the Assistant Secretary will accompany the findings with a preliminary order providing relief to the complainant. The preliminary order will require, where appropriate: affirmative action to abate the violation; reinstatement of the complainant to his or her former position, together with the compensation (including back pay and interest), terms, conditions and privileges of the complainant's employment; and payment of compensatory damages, including, at the request of the complainant, the aggregate amount of all costs and expenses (including attorney and expert witness fees) reasonably incurred. Interest on back pay will be calculated using the interest rate applicable to underpayment of taxes under 26 U.S.C. 6621

and will be compounded daily. The preliminary order will also require the respondent to submit appropriate documentation to the Social Security Administration (SSA) allocating any back pay award to the appropriate calendar quarters.

(2) If the Assistant Secretary concludes that a violation has not occurred, the Assistant Secretary will notify the parties of that finding.

(b) The findings and, where appropriate, the preliminary order will be sent by certified mail, return receipt requested (or other means that allow OSHA to confirm receipt), to all parties of record (and each party's legal counsel if the party is represented by counsel). The findings and, where appropriate, the preliminary order will inform the parties of the right to object to the findings and/or order and to request a hearing, and of the right of the respondent to request an award of attorney fees not exceeding $1,000 from the administrative law judge (ALJ), regardless of whether the respondent has filed objections, if the respondent alleges that the complaint was frivolous or brought in bad faith. The findings and, where appropriate, the preliminary order also will give the address of the Chief Administrative Law Judge, U.S. Department of Labor. At the same time, the Assistant Secretary will file with the Chief Administrative Law Judge a copy of the original complaint and a copy of the findings and/or order.

(c) The findings and any preliminary order will be effective 30 days after receipt by the respondent (or the respondent's legal counsel if the respondent is represented by counsel), or on the compliance date set forth in the preliminary order, whichever is later, unless an objection and/or a request for hearing has been timely filed as provided at § 1987.106. However, the portion of any preliminary order requiring reinstatement will be effective immediately upon the respondent's receipt of the findings and the preliminary order, regardless of any objections to the findings and/or the order.

Subpart B—Litigation

§ 1987.106 Objections to the findings and the preliminary order and requests for a hearing.

(a) Any party who desires review, including judicial review, of the findings and/or preliminary order, or a respondent alleging that the complaint was frivolous or brought in bad faith who seeks an award of attorney fees under FSMA, must file any objections and/or a request for a hearing on the record within 30 days of receipt of the findings and preliminary order pursuant to § 1987.105. The objections, request for a hearing, and/or request for attorney fees must be in writing and state whether the objections are to the findings, the preliminary order, and/or whether there should be an award of attorney fees. The date of the postmark, facsimile transmittal, or electronic communication transmittal is considered the date of filing; if the objection is filed in person, by hand delivery or other means, the objection is filed upon receipt. Objections must be filed with the Chief Administrative Law Judge, U.S. Department of Labor, and copies of the objections must be mailed at the same time to the other parties of record, the OSHA official who issued the findings and order, the Assistant Secretary, and the Associate Solicitor, Division of Fair Labor Standards, U.S. Department of Labor.

(b) If a timely objection is filed, all provisions of the preliminary order will be stayed, except for the portion requiring preliminary reinstatement, which will not be automatically stayed. The portion of the preliminary order requiring reinstatement will be effective immediately upon the respondent's receipt of the findings and preliminary order, regardless of any objections to the order. The respondent may file a motion with the Office of Administrative Law Judges for a stay of the Assistant Secretary's preliminary order of reinstatement, which shall be granted only based on exceptional circumstances. If no timely objection is filed with respect to either the findings or the preliminary order, the findings and/or the preliminary order will become the final decision of

the Secretary, not subject to judicial review.

§ 1987.107 Hearings.

(a) Except as provided in this part, proceedings will be conducted in accordance with the rules of practice and procedure for administrative hearings before the Office of Administrative Law Judges, codified at subpart A of part 18 of this title.

(b) Upon receipt of an objection and request for hearing, the Chief Administrative Law Judge will promptly assign the case to an ALJ who will notify the parties, by certified mail, of the day, time, and place of hearing. The hearing is to commence expeditiously, except upon a showing of good cause or unless otherwise agreed to by the parties. Hearings will be conducted de novo on the record. ALJs have broad discretion to limit discovery in order to expedite the hearing.

(c) If both the complainant and the respondent object to the findings and/or order, the objections will be consolidated and a single hearing will be conducted.

(d) Formal rules of evidence will not apply, but rules or principles designed to assure production of the most probative evidence will be applied. The ALJ may exclude evidence that is immaterial, irrelevant, or unduly repetitious.

§ 1987.108 Role of Federal agencies.

(a)(1) The complainant and the respondent will be parties in every proceeding and must be served with copies of all documents in the case. At the Assistant Secretary's discretion, the Assistant Secretary may participate as a party or as amicus curiae at any time at any stage of the proceeding. This right to participate includes, but is not limited to, the right to petition for review of a decision of an ALJ, including a decision approving or rejecting a settlement agreement between the complainant and the respondent.

(2) Copies of documents must be sent to OSHA and to the Associate Solicitor, Division of Fair Labor Standards, U.S. Department of Labor, only upon request of OSHA, or where the Assistant Secretary is participating in the proceeding, or where service on OSHA and the Associate Solicitor is otherwise required by the rules in this part.

(b) The FDA, if interested in a proceeding, may participate as amicus curiae at any time in the proceeding, at the FDA's discretion. At the request of the FDA, copies of all documents in a case must be sent to the FDA, whether or not the FDA is participating in the proceeding.

§ 1987.109 Decision and orders of the administrative law judge.

(a) The decision of the ALJ will contain appropriate findings, conclusions, and an order pertaining to the remedies provided in paragraph (d) of this section, as appropriate. A determination that a violation has occurred may be made only if the complainant has demonstrated by a preponderance of the evidence that protected activity was a contributing factor in the adverse action alleged in the complaint.

(b) If the complainant has satisfied the burden set forth in the prior paragraph, relief may not be ordered if the respondent demonstrates by clear and convincing evidence that it would have taken the same adverse action in the absence of any protected activity.

(c) Neither OSHA's determination to dismiss a complaint without completing an investigation pursuant to § 1987.104(e) nor OSHA's determination to proceed with an investigation is subject to review by the ALJ, and a complaint may not be remanded for the completion of an investigation or for additional findings on the basis that a determination to dismiss was made in error. Rather, if there otherwise is jurisdiction, the ALJ will hear the case on the merits or dispose of the matter without a hearing if the facts and circumstances warrant.

(d)(1) If the ALJ concludes that the respondent has violated the law, the ALJ will issue an order that will require, where appropriate: affirmative action to abate the violation; reinstatement of the complainant to his or her former position, together with the compensation (including back pay and interest), terms, conditions, and privileges of the complainant's employment; and payment of compensatory damages, including, at the request of the complainant, the aggregate

amount of all costs and expenses (including attorney and expert witness fees) reasonably incurred. Interest on back pay will be calculated using the interest rate applicable to underpayment of taxes under 26 U.S.C. 6621 and will be compounded daily. The order will also require the respondent to submit appropriate documentation to the Social Security Administration (SSA) allocating any back pay award to the appropriate calendar quarters.

(2) If the ALJ determines that the respondent has not violated the law, an order will be issued denying the complaint. If, upon the request of the respondent, the ALJ determines that a complaint was frivolous or was brought in bad faith, the ALJ may award to the respondent a reasonable attorney fee, not exceeding $1,000.

(e) The decision will be served upon all parties to the proceeding, the Assistant Secretary, and the Associate Solicitor, Division of Fair Labor Standards, U.S. Department of Labor. Any ALJ's decision requiring reinstatement or lifting an order of reinstatement by the Assistant Secretary will be effective immediately upon receipt of the decision by the respondent. All other portions of the ALJ's order will be effective 14 days after the date of the decision unless a timely petition for review has been filed with the Administrative Review Board (ARB), U.S. Department of Labor. The decision of the ALJ will become the final order of the Secretary unless a petition for review is timely filed with the ARB and the ARB accepts the petition for review.

§ 1987.110 Decision and orders of the Administrative Review Board.

(a) Any party desiring to seek review, including judicial review, of a decision of the ALJ, or a respondent alleging that the complaint was frivolous or brought in bad faith who seeks an award of attorney fees, must file a written petition for review with the ARB, which has been delegated the authority to act for the Secretary and issue final decisions under this part. The parties should identify in their petitions for review the legal conclusions or orders to which they object, or the objections may be deemed waived. A petition must be filed within 14 days of the date of the decision of the ALJ. The date of the postmark, facsimile transmittal, or electronic communication transmittal will be considered to be the date of filing; if the petition is filed in person, by hand delivery or other means, the petition is considered filed upon receipt. The petition must be served on all parties and on the Chief Administrative Law Judge at the time it is filed with the ARB. Copies of the petition for review must be served on the Assistant Secretary and on the Associate Solicitor, Division of Fair Labor Standards, U.S. Department of Labor.

(b) If a timely petition for review is filed pursuant to paragraph (a) of this section, the decision of the ALJ will become the final order of the Secretary unless the ARB, within 30 days of the filing of the petition, issues an order notifying the parties that the case has been accepted for review. If a case is accepted for review, the decision of the ALJ will be inoperative unless and until the ARB issues an order adopting the decision, except that any order of reinstatement will be effective while review is conducted by the ARB, unless the ARB grants a motion by the respondent to stay that order based on exceptional circumstances. The ARB will specify the terms under which any briefs are to be filed. The ARB will review the factual determinations of the ALJ under the substantial evidence standard. If no timely petition for review is filed, or the ARB denies review, the decision of the ALJ will become the final order of the Secretary. If no timely petition for review is filed, the resulting final order is not subject to judicial review.

(c) The final decision of the ARB will be issued within 120 days of the conclusion of the hearing, which will be deemed to be 14 days after the date of the decision of the ALJ, unless a motion for reconsideration has been filed with the ALJ in the interim. In such case the conclusion of the hearing is the date the motion for reconsideration is denied or 14 days after a new decision is issued. The ARB's final decision will be served upon all parties and the Chief Administrative Law Judge by mail. The final decision will also be

served on the Assistant Secretary and on the Associate Solicitor, Division of Fair Labor Standards, U.S. Department of Labor, even if the Assistant Secretary is not a party.

(d) If the ARB concludes that the respondent has violated the law, the ARB will issue a final order providing relief to the complainant. The final order will require, where appropriate: affirmative action to abate the violation; reinstatement of the complainant to his or her former position, together with the compensation (including back pay and interest), terms, conditions, and privileges of the complainant's employment; and payment of compensatory damages, including, at the request of the complainant, the aggregate amount of all costs and expenses (including attorney and expert witness fees) reasonably incurred. Interest on back pay will be calculated using the interest rate applicable to underpayment of taxes under 26 U.S.C. 6621 and will be compounded daily. The order will also require the respondent to submit appropriate documentation to the Social Security Administration (SSA) allocating any back pay award to the appropriate calendar quarters.

(e) If the ARB determines that the respondent has not violated the law, an order will be issued denying the complaint. If, upon the request of the respondent, the ARB determines that a complaint was frivolous or was brought in bad faith, the ARB may award to the respondent a reasonable attorney fee, not exceeding $1,000.

Subpart C—Miscellaneous Provisions

§ 1987.111 Withdrawal of complaints, findings, objections, and petitions for review; settlement.

(a) At any time prior to the filing of objections to the Assistant Secretary's findings and/or preliminary order, a complainant may withdraw his or her complaint by notifying OSHA, orally or in writing, of his or her withdrawal. OSHA then will confirm in writing the complainant's desire to withdraw and determine whether to approve the withdrawal. OSHA will notify the parties (and each party's legal counsel if the party is represented by counsel) of the approval of any withdrawal. If the complaint is withdrawn because of settlement, the settlement must be submitted for approval in accordance with paragraph (d) of this section. A complainant may not withdraw his or her complaint after the filing of objections to the Assistant Secretary's findings and/or preliminary order.

(b) The Assistant Secretary may withdraw the findings and/or preliminary order at any time before the expiration of the 30-day objection period described in § 1987.106, provided that no objection has been filed yet, and substitute new findings and/or a new preliminary order. The date of the receipt of the substituted findings or order will begin a new 30-day objection period.

(c) At any time before the Assistant Secretary's findings and/or order become final, a party may withdraw objections to the Assistant Secretary's findings and/or order by filing a written withdrawal with the ALJ. If the case is on review with the ARB, a party may withdraw a petition for review of an ALJ's decision at any time before that decision becomes final by filing a written withdrawal with the ARB. The ALJ or the ARB, as the case may be, will determine whether to approve the withdrawal of the objections or the petition for review. If the ALJ approves a request to withdraw objections to the Assistant Secretary's findings and/or order, and there are no other pending objections, the Assistant Secretary's findings and/or order will become the final order of the Secretary. If the ARB approves a request to withdraw a petition for review of an ALJ decision, and there are no other pending petitions for review of that decision, the ALJ's decision will become the final order of the Secretary. If objections or a petition for review are withdrawn because of settlement, the settlement must be submitted for approval in accordance with paragraph (d) of this section.

(d)(1) *Investigative settlements.* At any time after the filing of a complaint, but before the findings and/or order are objected to or become a final order by operation of law, the case may be settled if OSHA, the complainant, and the respondent agree to a settlement. OSHA's approval of a settlement reached by the respondent and the

complainant demonstrates OSHA's consent and achieves the consent of all three parties.

(2) *Adjudicatory settlements.* At any time after the filing of objections to the Assistant Secretary's findings and/or order, the case may be settled if the participating parties agree to a settlement and the settlement is approved by the ALJ if the case is before the ALJ, or by the ARB if the ARB has accepted the case for review. A copy of the settlement will be filed with the ALJ or the ARB, as appropriate.

(e) Any settlement approved by OSHA, the ALJ, or the ARB will constitute the final order of the Secretary and may be enforced in United States district court pursuant to § 1987.113.

§ 1987.112 Judicial review.

(a) Within 60 days after the issuance of a final order under §§ 1987.109 and 1987.110, any person adversely affected or aggrieved by the order may file a petition for review of the order in the United States Court of Appeals for the circuit in which the violation allegedly occurred or the circuit in which the complainant resided on the date of the violation.

(b) A final order is not subject to judicial review in any criminal or other civil proceeding.

(c) If a timely petition for review is filed, the record of a case, including the record of proceedings before the ALJ, will be transmitted by the ARB or the ALJ, as the case may be, to the appropriate court pursuant to the Federal Rules of Appellate Procedure and the local rules of such court.

§ 1987.113 Judicial enforcement.

Whenever any person has failed to comply with a preliminary order of reinstatement, or a final order, including one approving a settlement agreement, issued under FSMA, the Secretary or a person on whose behalf the order was issued may file a civil action seeking enforcement of the order in the United States district court for the district in which the violation was found to have occurred. The Secretary also may file a civil action seeking enforcement of the order in the United States district court for the District of Columbia.

§ 1987.114 District court jurisdiction of retaliation complaints.

(a) The complainant may bring an action at law or equity for de novo review in the appropriate district court of the United States, which will have jurisdiction over such an action without regard to the amount in controversy, either:

(1) Within 90 days after receiving a written determination under § 1987.105(a) provided that there has been no final decision of the Secretary; or

(2) If there has been no final decision of the Secretary within 210 days of the filing of the complaint.

(b) At the request of either party, the action shall be tried by the court with a jury.

(c) A proceeding under paragraph (a) of this section shall be governed by the same legal burdens of proof specified in § 1987.109. The court shall have jurisdiction to grant all relief necessary to make the employee whole, including injunctive relief and compensatory damages, including:

(1) Reinstatement with the same seniority status that the employee would have had, but for the discharge or discrimination;

(2) The amount of back pay, with interest;

(3) Compensation for any special damages sustained as a result of the discharge or discrimination; and

(4) Litigation costs, expert witness fees, and reasonable attorney fees.

(d) Within seven days after filing a complaint in federal court, a complainant must file with OSHA, the ALJ, or the ARB, depending on where the proceeding is pending, a copy of the file-stamped complaint. A copy of the complaint also must be served on the OSHA official who issued the findings and/or preliminary order, the Assistant Secretary, and the Associate Solicitor, Division of Fair Labor Standards, U.S. Department of Labor.

§ 1987.115 Special circumstances; waiver of rules.

In special circumstances not contemplated by the provisions of the rules in this part, or for good cause shown, the ALJ or the ARB on review may, upon application, after three days

notice to all parties, waive any rule or issue such orders that justice or the administration of FSMA requires.

PART 1990—IDENTIFICATION, CLASSIFICATION, AND REGULATION OF POTENTIAL OCCUPATIONAL CARCINOGENS

GENERAL

Sec.
1990.101 Scope.
1990.102 Purpose.
1990.103 Definitions.
1990.104 Scientific review panel.
1990.105 Advisory committees.
1990.106 Amendments to this policy.

THE OSHA CANCER POLICY

1990.111 General statement of regulatory policy.
1990.112 Classification of potential carcinogens.

PRIORITY SETTING

1990.121 Candidate list of potential occupational carcinogens.
1990.122 Response to petitions.
1990.131 Priority lists for regulating potential occupational carcinogens.
1990.132 Factors to be considered.
1990.133 Publication.

REGULATION OF POTENTIAL OCCUPATIONAL CARCINOGENS

1990.141 Advance notice of proposed rulemaking.
1990.142 Initiation of a rulemaking.
1990.143 General provisions for the use of human and animal data.
1990.144 Criteria for consideration of arguments on certain issues.
1990.145 Consideration of substantial new issues or substantial new evidence.
1990.146 Issues to be considered in the rulemaking.
1990.147 Final action.

MODEL STANDARDS

1990.151 Model standard pursuant to section 6(b) of the Act.
1990.152 Model emergency temporary standard pursuant to section 6(c) of the Act.

AUTHORITY: Secs. 4, 6, 8, Occupational Safety and Health Act of 1970 (29 U.S.C. 653, 655, 657); Secretary of Labor's Order No. 8–76 (41 FR 25059); and 29 CFR part 1911.

SOURCE: 45 FR 5282, Jan. 22, 1980, unless otherwise noted.

GENERAL

§ 1990.101 Scope.

This part establishes criteria and procedures for the identification, classification, and regulation of potential occupational carcinogens found in each workplace in the United States regulated by the Occupational Safety and Health Act of 1970 (the Act). The procedures contained in this part supplement the procedural regulations in other parts of this chapter. In the event of a conflict, the procedures contained in this part shall govern the identification, classification, and regulation of potential occupational carcinogens. This part may be referred to as ''The OSHA Cancer Policy.''

§ 1990.102 Purpose.

The Act provides, among other things, that

> the Secretary, in promulgating standards dealing with toxic materials or harmful physical agents under this section, shall set the standard which most adequately assures, to the extent feasible, on the basis of the best available evidence, that no employee will suffer material impairment of health or functional capacity even if such employee has regular exposure to the hazard dealt with by such standard for the period of his or her working life. Development of standards under this section shall be based upon research, demonstrations, experiments, and such other information as may be appropriate. In addition to the attainment of the highest degree of health and safety protection for the employee, other considerations shall be the latest available scientific data in the field, the feasibility of the standards, and experience gained under this and other health and safety laws. Whenever practicable, the standard promulgated shall be expressed in terms of objective criteria and of the performance desired (section 6(b)(5)).

It is the purpose of the regulations of this part to carry out the intent of the Act with respect to the identification, classification, and regulation of potential occupational carcinogens.

§ 1990.103 Definitions.

Terms used in this part shall have the meanings set forth in the Act. In addition, as used in this part, the following terms shall have the meanings set forth below:

Act means the Occupational Safety and Health Act of 1970 (Pub. L. 91–596, 84 Stat. 1590 *et seq.*, 29 U.S.C. 551 *et seq.).*

Administrator of EPA means the Administrator of the United States Environmental Protection Agency, or designee.

Chairperson of CPSC means the Chairman of the United States Consumer Product Safety Commission, or designee.

Commissioner of FDA means the Commissioner of the Food and Drug Administration, United States Department of Health and Human Services, or designee.

Director of NCI means the Director of the National Cancer Institute, United States Department of Health and Human Services, or designee.

Director of NIEHS means the Director of the National Institute of Environmental Health Sciences, United States Department of Health and Human Services, or designee.

Director of NIOSH means the Director of the National Institute for Occupational Safety and Health, United States Department of Health and Human Services, or designee.

Mutagenesis means the induction of heritable changes in the genetic material of either somatic or germinal cells.

Positive results in short-term tests means positive results in assays for two or more of the following types of effect:

(1) The induction of DNA damage and/or repair;

(2) Mutagenesis in bacteria, yeast, *Neurospora* or *Drosophila melanogaster;*

(3) Mutagenesis in mammalian somatic cells;

(4) Mutagenesis in mammalian germinal cells; or

(5) Neoplastic transformation of mammalian cells in culture.

Potential occupational carcinogen means any substance, or combination or mixture of substances, which causes an increased incidence of benign and/or malignant neoplasms, or a substantial decrease in the latency period between exposure and onset of neoplasms in humans or in one or more experimental mammalian species as the result of any oral, respiratory or dermal exposure, or any other exposure which results in the induction of tumors at a site other than the site of administration. This definition also includes any substance which is metabolized into one or more potential occupational carcinogens by mammals.

Secretary of HHS means the Secretary of the United States Department of Health and Human Services, or designee.

§ 1990.104 Scientific review panel.

(a) *General.* At any time, the Secretary may request the Director of NCI, the Director of NIEHS and/or the Director of NIOSH to convene a scientific review panel (''the panel'') to provide recommendations to the Secretary in the identification, classification, or regulation of any potential occupational carcinogen.

(b) *Membership.* The panel will consist of individuals chosen by the respective Director(s). The panel will consist of individuals who are appropriately qualified in the disciplines relevant to the issues to be considered, and who are employed by the United States. The panel does not constitute an advisory committee within the meaning of section 6(b) or 7(b) of the Act, or the Federal Advisory Committee Act (Pub. L. 92–463, 86 Stat. 770).

(c) *Report.* The Secretary shall request that the panel submit a report of its evaluation within ninety (90) days after the appointment of the members of the panel. The Secretary shall place a copy of the report in the record of any relevant rulemaking undertaken pursuant to this part and allow an appropriate time for public review and comment. If a panel is not established or fails to file a timely report, or if the Secretary determines that it is necessary to proceed without waiting for the panel's report, the Secretary may proceed in making any determination without such report.

(d) *Other aid and assistance.* Nothing herein precludes the Secretary from obtaining advice or other aid from any person or organization including NCI, NIEHS, and NIOSH.

§ 1990.105 Advisory committees.

The Secretary may appoint an Advisory Committee, pursuant to sections 6(b) and 7 of the Act, and 29 CFR part

1912, concerning any potential occupational carcinogen. The Secretary shall require the Advisory Committee to submit its recommendations to assist the Secretary in standard setting no later than ninety (90) days from the date of the Advisory Committee's appointment, unless extended by the Secretary for exceptional circumstances. If an Advisory Committee fails to file a timely report, the Secretary may proceed in standard setting activities without such a report.

§ 1990.106 Amendments to this policy.

(a) *Initiation of review of this policy*—(1) *Secretary's request*. No later than every three (3) years from the effective date of this part, or from the last general review, the Secretary shall request the Director of NCI, the Director of NIEHS and/or the Director of NIOSH, to review this part and render their opinions on whether significant scientific or technical advances made since the effective date of this part warrant any amendment to this part. The request shall ask that the answer be provided to the Secretary within one hundred twenty (120) days.

(2) *Recommendations by the institutes*. At any time, the Director of NCI, the Director of NIEHS and/or the Director of NIOSH may submit recommendations to the Secretary for amendments to this part whenever any of them believes that scientific or technical advances justify such amendments.

(3) *Petitions from the public*. (i) Any interested person may petition the Secretary concerning amendments to this part based upon substantial new issues or substantial new evidence.

(ii) For the purposes of this part, substantial new evidence is evidence which differs significantly from that presented in establishing this part, including amendments.

(iii) For the purposes of this part, substantial new issues are issues which differ significantly from those upon which the Secretary has reached a conclusion in the rulemaking establishing this part (including the conclusions reached in the preamble).

(iv) Each petition to amend this part shall contain at least the following information:

(A) Name and address of petitioner;

(B) The provisions which the petitioner believes are inappropriate;

(C) All data, views and arguments relied upon by the petitioner; and

(D) A detailed statement and analysis as to why the petitioner believes that the data, views and arguments presented by petitioner:

(*1*) Constitute substantial new issues or substantial new evidence; and

(*2*) Are so significant as to warrant amendment of this part.

(b) *Response to recommendations and petitions*—(1) *By the institutes*. Whenever any Director recommends an amendment to this part, the Secretary shall, within one hundred twenty (120) days after receipt of the recommendation, publish in the FEDERAL REGISTER, a notice which:

(i) States the reasons why the Secretary has determined not to commence a rulemaking proceeding to amend this part, in whole or in part, at that time; or

(ii) Commences a rulemaking proceeding to consider amending this part accordingly; or

(iii) Appoints an Advisory Committee as provided for by § 1990.105 of this part and sections 6(b) and 7 of the Act.

(2) *By the public*. Within ninety (90) days, or as soon thereafter as possible, after receipt of a petition pursuant to § 1990.106(a)(3), the Secretary shall:

(i) Refer the petition to the Director of NCI, the Director of NIEHS and/or the Director of NIOSH, in which case the provisions of § 1990.106 (a)(1) and (b)(1) are applicable; or

(ii) Appoint an advisory committee;

(iii) Deny the petition, briefly giving the reasons therefor; or

(iv) Commence a rulemaking proceeding to consider amending this part accordingly.

(3) *On the Secretary's motion*. At any time, the Secretary may, on his own motion, commence a rulemaking proceeding to amend this part.

[45 FR 5282, Jan. 22, 1980; 45 FR 43405, June 27, 1980]

THE OSHA CANCER POLICY

§ 1990.111 General statement of regulatory policy.

(a) This part establishes the criteria and procedures under which substances

will be regulated by OSHA as potential occupational carcinogens. Although the conclusive identification of ''carcinogens'' is a complex matter ''on the frontiers of science,'' (*IUD* v. *Hodgson* 499 F. 2d 467, 474 (D.C. Cir. 1974)), responsible health regulatory policy requires that criteria should be specified for the identification of substances which should be regulated as posing potential cancer risks to workers.

(b) The criteria established by this part are based on an extensive review of scientific data and opinions. The part provides for amending these criteria in light of new scientific developments. Decisions as to whether any particular substance meets the criteria or not will be consistent with the policies and procedures established by this part and will be based upon scientific evaluation of the evidence on that substance.

(c) This part applies to individual substances, groups of substances, or combinations or mixtures of substances which may be found in workplaces in the United States. In individual rulemaking proceedings under this part, the identity and range of substances and mixtures to be covered by the standard will be specified and the appropriateness of applying the available evidence to the range of substances and mixtures proposed for regulation will be subject to scientific and policy review.

(d) Potential occupational carcinogens will be identified and classified on the basis of human epidemiological studies and/or experimental carcinogenesis bioassays in mammals. Positive results in short term tests will also be used as concordant evidence.

(e) Potential occupational carcinogens will be classified and regulated in accordance with the policy. The scientific evidence as to whether individual substances meet these criteria will be considered in individual rulemakings. The issues which may be considered in these rulemakings will be limited as specified herein.

(f) This policy provides for the classification of potential occupational carcinogens into two categories depending on the nature and extent of the available scientific evidence. The two categories of potential occupational carcinogens may be regulated differently.

(g) The policy establishes a procedure for setting priorities and making them public.

(h) Worker exposure to Category I Potential Carcinogens will be reduced primarily through the use of engineering and work practice controls.

(i) Worker exposure to Category II Potential Carcinogens will be reduced as appropriate and consistent with the statutory requirements on a case-by-case basis in the rulemaking proceedings on individual substances. Any permissible exposure level so established shall be met primarily through engineering and work practice controls.

(j) The assessment of cancer risk to workers resulting from exposure to a potential occupational carcinogen will be made on the basis of available data. Because of the uncertainties and serious consequences to workers if the estimated risk is understated, cautious and prudent assumptions will be utilized to perform risk assessments.

(k) Where the Secretary determines that one or more suitable substitutes exist for certain uses of Category I Potential Carcinogens that are less hazardous to humans, a no occupational exposure level shall be set for those uses, to be achieved solely through the use of engineering and work practice controls to encourage substitution. In determining whether a substitute is suitable, the Secretary will consider the technological and economic feasibility of the introduction of the substitute, including its relative effectiveness and other relevant factors, such as regulatory requirements and the time needed for an orderly transition to the substitute.

[45 FR 5282, Jan. 22, 1980, as amended at 46 FR 5881, Jan. 21, 1981]

§ 1990.112 Classification of potential carcinogens.

The following criteria for identification, classification and regulation of potential occupational carcinogens will be applied, unless the Secretary considers evidence under the provisions of §§ 1990.143, 1990.144 and 1990.145 and determines that such evidence warrants an exception to these criteria.

(a) *Category I Potential Carcinogens.* A substance shall be identified, classified, and regulated as a Category I Potential Carcinogen if, upon scientific evaluation, the Secretary determines that the substance meets the definition of a potential occupational carcinogen in (1) humans, or (2) in a single mammalian species in a long-term bioassay where the results are in concordance with some other scientifically evaluated evidence of a potential carcinogenic hazard, or (3) in a single mammalian species in an adequately conducted long-term bioassay, in appropriate circumstances where the Secretary determines the requirement for concordance is not necessary. Evidence of concordance is any of the following: positive results from independent testing in the same or other species, positive results in short-term tests, or induction of tumors at injection or implantation sites.

(b) *Category II Potential Carcinogens.* A substance shall be identified, classified, and regulated as a Category II Potential Carcinogen if, upon scientific evaluation, the Secretary determines that:

(1) The substance meets the criteria set forth in § 1990.112(a), but the evidence is found by the Secretary to be only ''suggestive''; or

(2) The substance meets the criteria set forth in § 1990.112(a) in a single mammalian species without evidence of concordance.

PRIORITY SETTING

§ 1990.121 Candidate list of potential occupational carcinogens.

(a) *Contents.* The Secretary shall prepare a list of substances (the ''Candidate List'') which are reported to be present in any American workplace and which, on the basis of a brief scientific review of available data, may be considered candidates for further scientific review and possible regulation as Category I Potential Carcinogens or Category II Potential Carcinogens. For the purposes of this paragraph, ''available data'' means:

(1) The data submitted by any person;

(2) Any data referred to by the Secretary of HHS or by the Director of NIOSH, either in the latest list entitled ''Suspected Carcinogens'' or any other communication;

(3) Literature referred to in U.S. Public Health Service, Publication No. 149;

(4) Data summarized and reviewed in Monographs of the International Agency for Research on Cancer (IARC) of the World Health Organization;

(5) The Toxic Substances Control Act Inventory of Chemical Substances, published by the Administrator of EPA;

(6) The Secretary of HHS's Annual Report to the President and the Congress as required by the Community Mental Health Centers Extension Act of 1978, section 404(a)(9), 42 U.S.C. 285.

(7) Any other relevant data of which the Secretary has actual knowledge.

(b) *Tentative classification.* The Secretary may tentatively designate substances on the Candidate List as candidates for classification as Category I Potential Carcinogens or as Category II Potential Carcinogens, or may list substances without a tentative designation, based on the brief scientific review of available data for the purpose of initiating a more extensive scientific review.

(c) *No legal rights established.* The inclusion or exclusion of any substance from the Candidate List shall not be subject to judicial review nor be the basis of any legal action, nor shall the exclusion of any substance from the list prevent the regulation of that substance as a potential occupational carcinogen. The inclusion of a substance on the Candidate List and its possible tentative designation as a Category I Potential Carcinogen or a Category II Potential Carcinogen therein do not reflect a final scientific determination that the substance is, in fact, a Category I Potential Carcinogen or a Category II Potential Carcinogen. It is a policy determination based on the brief scientific review that the Secretary should conduct a thorough review of all relevant scientific data concerning the substance.

EFFECTIVE DATE NOTE: At 48 FR 243, Jan. 4, 1983, in § 1990.121, paragraphs (a) and (b) were stayed in order to evaluate the impact of publishing the Candidate Lists and Priority

List and to reconsider the criteria used in establishing the lists (see also 47 FR 187, Jan. 5, 1982).

§ 1990.122 Response to petitions.

Whenever the Secretary receives any information submitted in writing by any interested person concerning the inclusion or omission of any substance from the Candidate List, the Secretary shall briefly review the information and any other available data, as defined in § 1990.121(a). The results of the Secretary's review shall be transmitted to the petitioner, together with a short statement of the Secretary's reasons therefor, and made public upon request.

EFFECTIVE DATE NOTE: At 48 FR 243, Jan. 4, 1983, § 1990.122 was stayed in order to evaluate the impact of publishing the Candidate List and Priority Lists and to reconsider the criteria used in establishing the lists (see also 47 FR 187, Jan. 5, 1982).

§ 1990.131 Priority lists for regulating potential occupational carcinogens.

The Secretary shall establish two priority lists for regulating potential occupational carcinogens. One list should include approximately ten (10) candidates for rulemaking as Category I Potential Carcinogens; the other approximately ten (10) candidates for rulemaking as Category II Potential Carcinogens. The order of placement of substances on these lists will not reflect the Secretary's determination of the exact order in which these substances should be regulated in rulemaking proceedings but rather a policy determination that the Secretary plans to address some or all of these substances prior to proceeding with a thorough scientific review of data concerning other substances on the Candidate List. The inclusion or exclusion of any substance on these lists shall not be subject to judicial review or be the basis for any legal action. The Secretary may regulate a potential occupational carcinogen which has not been placed on these lists. The inclusion of a substance on either of these lists does not reflect a final scientific determination that the substance is, in fact, a Category I Potential Carcinogen or a Category II Potential Carcinogen.

EFFECTIVE DATE NOTE: At 48 FR 243, Jan. 4, 1983, § 1990.131 was stayed in order to evaluate the impact of publishing the Candidate List and Priority Lists and to reconsider the criteria used in establishing the lists (see also 47 FR 187, Jan. 5, 1982).

§ 1990.132 Factors to be considered.

(a) The setting of priorities is a complex matter which requires subjective and policy judgments. It is not appropriate to establish a rigid formula or to assign predetermined weight to each factor. The identification of some of the elements is to guide the OSHA staff and inform the public on the development of priorities. It is not intended to create any legal rights with respect to the setting of priorities.

(b) Some factors which may be taken into account in setting priorities for regulating potential occupational carcinogens, when such data are available, are:

(1) The estimated number of workers exposed;

(2) The estimated levels of human exposure;

(3) The levels of exposure to the substance which have been reported to cause an increased incidence of neoplasms in exposed humans, animals or both;

(4) The extent to which regulatory action could reduce not only risks of contracting cancer but also other occupational and environmental health hazards;

(5) Whether the molecular structure of the substance is similar to the molecular structure of another substance which meets the definition of a potential occupational carcinogen;

(6) Whether there are substitutes that pose a lower risk of cancer or other serious human health problems, or available evidence otherwise suggests that the social and economic costs of regulation would be small; and

(7) OSHA will also consider its responsibilities for dealing with other health and safety hazards and will consider the actions being taken or planned by other governmental agencies in dealing with the same or similar health and safety hazards.

§ 1990.133 Publication.

(a) The Secretary shall publish the Candidate List in the FEDERAL REGISTER at least annually.

(b) The Secretary shall publish the Priority Lists in the FEDERAL REGISTER at least every six months and may seek public comment thereon.

(c) The Secretary may periodically publish in the FEDERAL REGISTER a notice requesting information concerning the classification and establishment of priorities for substances on the Candidate List together with a brief statement describing the type of information being sought.

EFFECTIVE DATE NOTE: At 48 FR 243, Jan. 4, 1983, § 1990.133 was stayed in order to evaluate the impact of publishing the Candidate List and Priority Lists and to reconsider the criteria used in establishing the lists (see also 47 FR 187, Jan. 5, 1982).

REGULATION OF POTENTIAL OCCUPATIONAL CARCINOGENS

§ 1990.141 Advance notice of proposed rulemaking.

(a) Within thirty (30) days after OSHA initiates a study concerning the economic and/or technological feasibility of specific standards that might be applied in the regulation of a potential occupational carcinogen, the Secretary will normally publish, in the FEDERAL REGISTER, a notice which includes at least the following:

(1) The name of the substance(s),

(2) The scope of the study, including where possible,

(i) Affected industries,

(ii) Levels of exposure being studied,

(iii) The anticipated completion date of the study;

(3) A brief summary of the available data on health effects;

(4) An estimate of when the Secretary anticipates the issuance of a proposal;

(5) An invitation to interested parties to provide relevant information;

(6) A statement that persons wishing to provide OSHA with their own study should complete it within 30 days after the anticipated proposal date; and

(7) A statement of the procedural requirements that must be met before substantial new issues or substantial new evidence will be considered in the proceeding pursuant to § 1990.145.

(b) Where the Secretary determines to discontinue a feasibility study, the Secretary should publish, within 30 days, a notice in the FEDERAL REGISTER so indicating.

§ 1990.142 Initiation of a rulemaking.

Where the Secretary decides to regulate a potential occupational carcinogen, the Secretary shall initiate a rulemaking proceeding in accordance with one of the following procedures, as appropriate.

(a) *Notice of proposed rulemakings (section 6(b) of the Act)*—(1) *General.* The Secretary may issue a notice of proposed rulemaking in the FEDERAL REGISTER, pursuant to section 6(b) of the Act and part 1911 of this chapter. The notice shall provide for no more than a sixty (60) day comment period, and may provide for a hearing, which shall be scheduled for no later than one hundred (100) days after publication of the Notice of Proposed Rulemaking. The commencement of the hearing may be postponed once, for no more than thirty (30) days, for good cause shown.

(2) *Provisions of the proposed standard for Category I Potential Carcinogens.* Whenever the Secretary issues a notice of proposed rulemaking to regulate a substance as a Category I Potential Carcinogen:

(i) The proposed standard shall contain at least provisions for scope and application, definitions, notification of use, a permissible exposure limit, monitoring, regulated areas, methods of compliance including the development of a compliance plan, respiratory protection, protective clothing and equipment, housekeeping, waste disposal, hygiene facilities, medical surveillance, employee information and training, signs and labels, recordkeeping, and employee observation of monitoring as set forth in § 1990.151, unless the Secretary explains why any or all such provisions are not appropriate;

(ii) The model standard set forth in § 1990.151 shall be used as a guideline, and

(iii) The permissible exposure limit shall be achieved primarily through engineering and work practice controls except that if a suitable substitute is

available for one or more uses no occupational exposure shall be permitted for those uses.

(3) *Provisions of the proposed standard for Category II Potential Carcinogens.* Whenever the Secretary issues a Notice of Proposed Rulemaking to regulate a substance as a Category II Potential Carcinogen:

(i) The proposed standard shall contain at least provisions for scope and application, definitions, notification of use, monitoring, respiratory protection, protective clothing and equipment, housekeeping, waste disposal, medical surveillance, employee information and training, recordkeeping and employee observation of monitoring as set forth in § 1990.151, unless the Secretary explains why any or all such provisions are not appropriate; and

(ii) The model standard set forth in § 1990.151 shall be used as a guideline; and

(iii) Worker exposure to Category II Potential Carcinogens will be reduced as appropriate and consistent with the statutory requirements on a case-by-case basis in the individual rulemaking proceedings. Any permissible exposure level so established shall be met primarily through engineering and work practice controls.

(b) *Emergency temporary standards (section 6(c) of the Act)*—(1) *General.* The Secretary may issue an Emergency Temporary Standard (ETS) for a Category I Potential Carcinogen in accordance with section 6(c) of the Act.

(2) *Provisions of the ETS.* (i) The ETS shall contain at least provisions for scope and application, definitions, notification of use, a permissible exposure limit, monitoring, methods of compliance including the development of a compliance plan, respiratory protection, protective clothing and equipment, housekeeping, waste disposal, medical surveillance, employee information and training, signs and labels, recordkeeping and employee observation of monitoring, unless the Secretary explains why any or all such provisions are not appropriate.

(ii) The model standard set forth in § 1990.152 shall be used as a guideline.

(iii) The permissible exposure limit shall be achieved through any practicable combination of engineering controls, work practice controls and respiratory protection.

[45 FR 5282, Jan. 22, 1980, as amended at 46 FR 5881, Jan. 21, 1981]

§ 1990.143 General provisions for the use of human and animal data.

Human and animal data which are scientifically evaluated to be positive evidence for carcinogenicity including the following policies shall be uniformly relied upon for the identification of potential occupational carcinogens. Arguments challenging the following provisions or their application to specific substances will be considered in individual rulemaking proceedings only if the evidence presented in support of the arguments meets the criteria for consideration specified in § 1990.144 or § 1990.145.

(a) *Positive human studies.* Positive results obtained in one or more human epidemiologic studies will be used to establish the qualitative inference of carcinogenic hazards to workers.

(b) *Positive animal studies.* Positive results obtained in one or more experimental studies conducted in one or more mammalian species will be used to establish the qualitative inference of carcinogenic hazard to workers. Arguments that positive results obtained in mammalian species should not be relied upon will be considered only if evidence is presented which meets the criteria for consideration specified in § 1990.144(c) or 1990.144(f).

(c) *Non-positive human studies.* Positive results in human or mammalian studies generally will be used for the qualitative identification of potential occupational carcinogens, even where non-positive results from human studies exist. Such non-positive results will be considered by the Secretary only if the studies or results meet the criteria set forth in § 1990.144(a).

(d) *Non-positive animal studies.* Positive results in one or more mammalian studies will be used for the qualitative identification of potential occupational carcinogens, even where non-positive studies exist in other mammalian species. Where non-positive and positive results exist in studies in the same species, the non-positive results will be evaluated.

(e) *Spontaneous tumors.* Positive results in human or mammalian studies for the induction or acceleration of induction of tumors of a type which occurs ''spontaneously'' in unexposed individuals will be used for the qualitative identification of potential occupational carcinogens.

(f) *Routes of exposure.* (1) Positive results in studies in which mammals are exposed via the oral, respiratory or dermal routes will be used for the qualitative identification of potential occupational carcinogens, whether tumors are induced at the site of application or distant sites.

(2) Positive results in studies in which mammals are exposed via any route of exposure and in which tumors are induced at sites distant from the site of administration will be used for the qualitative identification of potential occupational carcinogens.

(3)(i) Positive results in mammalian studies in which tumors are induced only at the site of administration, in which a substance or mixture of substances is administered by routes other than oral, respiratory or dermal, will be used as ''concordant'' evidence that a substance is a potential occupational carcinogen.

(ii) Arguments that such studies should not be relied upon will be considered only if evidence which meets the criteria set forth in § 1990.144(b) is provided.

(g) *Use of high doses in animal testing.* Positive results for carcinogenicity obtained in mammals exposed to high doses of a substance will be used to establish the qualitative inference of carcinogenic hazard to workers. Arguments that such studies should not be relied upon will be considered only if evidence which meets the criteria set forth in § 1990.144(d) is provided.

(h) *''Threshold'' or ''No-effect'' Levels.* No determination will be made that a ''threshold'' or ''no-effect'' level of exposure can be established for a human population exposed to carcinogens in general, or to any specific substance.

(i) *Benign tumors.* Results based on the induction of benign or malignant tumors, or both, will be used to establish a qualitative inference of carcinogenic hazard to workers. Arguments that substances that induce benign tumors do not present a carcinogenic risk to workers will be considered only if evidence that meets the criteria set forth in § 1990.144(e) is provided.

(j) *Statistical evaluation.* Statistical evaluation will be used in the determination of whether results in human, animal or short-term studies provide positive evidence for carcinogenicity, but will not be the exclusive means for such evaluation.

(k) *Carcinogenicity of metabolites.* A substance which is metabolized by mammals to yield one or more potential occupational carcinogens will itself be identified and classified as a potential occupational carcinogen, whether or not there is direct evidence that it induces tumors in humans or experimental animals. Evidence for such metabolism will normally be derived from *in vivo* studies in mammals. In appropriate circumstances, evidence may be derived from *in vitro* studies of mammalian tissues or fractions thereof. Arguments that evidence from *in vivo* metabolic studies in mammals is not relevant to the inference of carcinogenic hazard to humans will be considered only if such evidence meets the criteria set forth in § 1990.144(c).

[45 FR 5282, Jan. 22, 1980; 45 FR 43405, June 27, 1980]

§ 1990.144 Criteria for consideration of arguments on certain issues.

Arguments on the following issues will be considered by the Secretary in identifying or classifying any substance pursuant to this part, if evidence for the specific substance subject to the rulemaking conforms to the following criteria. Such arguments and evidence will be evaluated based upon scientific and policy judgments.

(a) *Non-positive results obtained in human epidemiologic studies.* Non-positive results obtained in human epidemiologic studies regarding the substance subject to the rulemaking or to a similar or closely related substance will be considered by the Secretary only if they meet the following criteria:

Criteria. (i) The epidemiologic study involved at least 20 years' exposure of a group of subjects to the substance and at least 30 years' observation of the subjects after initial exposure;

(ii) Documented reasons are provided for predicting the site(s) at which the substance would induce cancer if it were carcinogenic in humans; and

(iii) The group of exposed subjects was large enough for an increase in cancer incidence of 50% above that in unexposed controls to have been detected at any of the predicted sites.

Arguments that non-positive results obtained in human epidemiologic studies should be used to establish numerical upper limits on potential risks to humans exposed to specific levels of a substance will be considered only if criteria (i) and (ii) are met and, in addition:

(iv) Specific data on the level of exposure of the group of workers are provided, based either on direct measurements made periodically throughout the period of exposure, or upon other data which provide reliable evidence of the magnitude of exposure.

(b) *Tumors induced at site of administration.* Arguments that tumors at the site of administration should not be considered will be considered only if:

(i) The route of administration is not oral, respiratory or dermal; and

(ii) Evidence is provided which establishes that induction of local tumors is related to the physical configuration or formulation of the material administered (e.g., crystalline form or dimensions of a solid material, or matrix of an impregnated implant) and that tumors are not induced when the same material is administered in a different configuration or formula.

(c) *Metabolic differences.* Arguments that differences in metabolic profiles can be used to demonstrate that a chemical found positive in an experimental study in a mammalian species would pose no potential carcinogenic risk to exposed workers will be considered by the Secretary only if the evidence presented for the specific substance subject to the rulemaking meets the following criteria:

Criteria. (i) A complete metabolic profile, including identities of trace metabolites, is presented for the experimental animal species;

(ii) A complete metabolic profile, including identities of trace metabolites, is available for a human population group representative of those who are occupationally exposed;

(iii) Documented evidence is provided for ascribing the carcinogenic activity of the substance in the test animal species to metabolite(s) produced only in that species and not in humans; and

(iv) Documented evidence is provided to show that other metabolites produced also in humans have been adequately tested and have not been shown to be carcinogenic.

(d) *Use of high doses in animal testing.* Arguments that positive results obtained in carcinogenesis bioassays with experimental animals subjected to high doses of a substance are not relevant to potential carcinogenic risks to exposed workers will be considered by the Secretary only if the evidence for the specific substance subject to the rulemaking meets the following criteria:

Criteria. (i) Documented evidence is presented to show that the substance in question is metabolized by the experimental animal species exposed at the dose levels used in the bioassay(s) to metabolic products which include one or more that are not produced in the same species at lower doses.

(ii) Documented evidence is presented to show that the metabolite(s) produced only at high doses in the experimental animal species are the ultimate carcinogen(s) and that the metabolites produced at low doses are not also carcinogenic; and

(iii) Documented evidence is presented to show that the metabolite(s) produced only at high doses in the experimental animal species are not produced in humans exposed to low doses.

(e) *Benign tumors.* The Secretary will consider evidence that the substance subject to the rulemaking proceeding is capable only of inducing benign tumors in humans or experimental animals provided that the evidence for the specific substance meets the following criteria:

Criteria. (i) Data are available from at least two well-conducted bioassays in each of two species of mammals (or from equivalent evidence in more than two species);

(ii) Each of the bioassays to be considered has been conducted for the full lifetime of the experimental animals;

(iii) The relevant tissue slides are made available to OSHA or its designee and the diagnoses of the tumors as benign are made by at least one qualified pathologist who has personally examined each of the slides and who provides specific diagnostic criteria and descriptions; and

(iv) All of the induced tumors must be shown to belong to a type which is known not to progress to malignancy or to be at a benign stage when observed. In the latter case, data must be presented to show that multiple sections of the affected organ(s)

were adequately examined to search for invasion of the tumor cells into adjacent tissue, and that multiple sections of other organs were adequately examined to search for tumor metastases.

(f) *Indirect mechanisms.* The Secretary will consider evidence that positive results obtained in a carcinogenesis bioassay with experimental animals are not relevant to a determination of a carcinogenic risk to exposed workers, if the evidence demonstrates that the mechanism by which the observed tumor incidence is effected is indirect and would not occur if humans were exposed. As examples, evidence will be considered that a substance causes a carcinogenic effect by augmenting caloric intake or that the carcinogenic effect from exposure to a substance is demonstrated to be the result of the presence of a carcinogenic virus and it is demonstrated that, in either case, the effect would not take place in the absence of the particular carcinogenic virus or the augmented caloric intake.

[45 FR 5282, Jan. 22, 1980, as amended at 46 FR 5881, Jan. 21, 1981]

§ 1990.145 Consideration of substantial new issues or substantial new evidence.

(a) *Substantial new issues.* Notwithstanding any other provision of this part, the Secretary will consider in a rulemaking proceeding on a specific substance any substantial new issues upon which the Secretary did not reach a conclusion in the rulemaking proceeding(s) underlying this part including conclusions presented in the preamble.

(b) *Substantial new evidence.* Notwithstanding any other provision of this part, the Secretary will consider in a rulemaking proceeding on a specific substance any arguments, data or views which he determines are based upon substantial new evidence which may warrant the amendment of one or more provisions of this part. For the purposes of this part, ''substantial new evidence'' is evidence directly relevant to any provision of this part and is based upon data, views or arguments which differ significantly from those presented in establishing this part, including amendments thereto.

(c) *Petitions for consideration of substantial new evidence*—(1) *Petition.* Any interested person may file a written petition with the Secretary to consider ''substantial new evidence'' or one or more ''substantial new issues'' which contains the information specified in paragraph (c)(2) of this section. The Secretary shall treat such a petition as a request to amend this part, as well as a petition to consider ''substantial new evidence''.

(2) *Contents.* Each petition for consideration of ''substantial new evidence'' or one or more ''substantial new issues'' shall contain at least the following information:

(i) Name and address of the petitioner;

(ii) All of the data, views and arguments that the petitioner would like the Secretary to consider;

(iii) The provision or provisions that petitioner believes are inappropriate or should be added to this part in light of the new data, views, and arguments;

(iv) A statement which demonstrates that the data, views, and arguments relied upon by petitioners are directly relevant to the substance or class of substances that is the subject of a rulemaking or an Advance Notice of Proposed Rulemaking;

(v) A detailed statement and analysis as to why the petitioner believes that the data, views, and arguments presented by the petitioner:

(A) Differ significantly from those presented in the proceeding(s) which establish this part;

(B) Are so substantial as to warrant amendment of this part; and

(C) Constitute a new issue or new evidence within the meaning of paragraphs (a) and (b) of this section.

(3) *Deadline for petitions.* (i) Petitions which comply with paragraph (c) of this section, shall be filed in accordance with the schedule set forth in the Advanced Notice of Proposed Rulemaking.

(ii) In extraordinary cases the Secretary may consider evidence submitted after the deadline if the petitioner establishes that the evidence relied upon was not available and could not have reasonably been available in

whole or substantial part by the deadline and that it is being submitted at the earliest possible time.

(d) *Secretary's response.* (1) The Secretary shall respond to petitions under this paragraph in accordance with § 1990.106.

(2) Whenever the Secretary determines that the ''substantial new issue'' or the ''substantial new evidence'' submitted under this paragraph is sufficient to initiate a proceeding to amend this part, the Secretary shall:

(i) Issue a notice to consider amendment to this part and not proceed on the rulemaking concerning the individual substance until completion of the amendment proceeding; or

(ii) Issue a notice to consider amendment to this part and consolidate it with the proceeding on the individual substance.

§ 1990.146 Issues to be considered in the rulemaking.

Except as provided in § 1990.145, after issuance of the advance notice of rulemaking, the proceedings for individual substances under this part shall be limited to consideration of the following issues:

(a) Whether the substance, group of substances or combination of substances subject to the proposed rulemaking is appropriately considered in a single proceeding;

(b) Whether the substance or group of substances subject to the rulemaking meets the definition of a potential occupational carcinogen set forth in § 1990.103, including whether the scientific studies are reliable;

(c) Whether the available data can appropriately be applied to the substance, group of substances or combination of substances covered by the rulemaking;

(d) Whether information, data, and views that are submitted in accordance with § 1990.144 are sufficient to warrant an exception to this part;

(e) Whether the data, views and arguments that are submitted in accordance with § 1990.145 are sufficient to warrant amendment of this part;

(f) Whether the potential occupational carcinogen meets the criteria for a Category I Potential Carcinogen or a Category II Potential Carcinogen.

(g) The environmental impact arising from regulation of the substance;

(h) Any issues required by statute or executive order;

(i) The determination of the level to control exposures to Category I Potential Carcinogens primarily through the use of engineering and work practice controls including technological and economic considerations.

(j) The determination of the appropriate employee exposure level, consistent with the Act's requirements, for Category II Potential Carcinogens;

(k) Whether suitable substitutes are available for one or more uses of Category I Potential Carcinogens and; if so, the no occupational exposure level to be achieved solely with engineering and work practice controls and other issues relevant to substitution; and

(l) Whether the provisions of the proposal and of §§ 1990.151 and 1990.152 (model standards) are appropriate, except as limited by § 1990.142 and whether additional regulatory provisions may be appropriate.

[45 FR 5282, Jan. 22, 1980, as amended at 46 FR 5881, Jan. 21, 1981]

§ 1990.147 Final action.

(a) Within one hundred twenty (120) days from the last day of any hearing or ninety (90) days from the close of any post hearing comment period, whichever occurs first, the Secretary shall publish in the FEDERAL REGISTER:

(1) A final standard based upon the record in the proceeding; or

(2) A statement that no final standard will be issued, and the reasons therefor, or

(3) A statement that the Secretary intends to issue a final rule, but that he is unable to do so at the present time, including:

(i) The reasons therefor; and

(ii) The date by which the standard will be published, which may not exceed one hundred twenty (120) days thereafter.

(iii) The Secretary may issue no more than one such notice, unless the Secretary determines that (A) new evidence which was unavailable during the rulemaking proceeding has just become available; (B) the evidence is so important that a final rule could not

reasonably be issued without this evidence, and; (C) the record is reopened for receipt of comments and/or a hearing on this evidence. This paragraph does not require the Secretary to consider any evidence which is submitted after the dates established for the submission of evidence.

(b) The failure of the Secretary to comply with the required timeframes shall not be a basis to set aside any standard or to require the issuance of a new proposal on any individual substance.

(c) The final standard shall state whether the substance or group of substances subject to the rulemaking is classified as a Category I Potential Carcinogen or as a Category II Potential Carcinogen. If the classification differs from that in the notice of proposed rulemaking, the Secretary shall explain the reasons for the change in classification in the preamble to the final standard.

(d) If the substance is classified as a Category I Potential Carcinogen, the final standard shall conform to the provisions of § 1990.142(a)(2)(iii). If the final standard contains other provisions that substantially differ from the proposed provisions, the Secretary shall explain the reasons for the changes in the preamble to the final standard.

(e) If the substance is classified as a Category II potential carcinogen, the final standard shall conform to the provisions of § 1990.142(a)(3)(iii). If the final standard contains other provisions that substantially differ from the proposed provisions, the Secretary shall explain the reasons for the changes in the preamble to the final standard.

(f) If the substance is classified as a Category II potential carcinogen, the Secretary shall notify the applicable federal and state agencies, including the Administrator of EPA, the Director of NCI, the Director of NIEHS, the Director of NIOSH, the Commissioner of FDA and the Chairperson of CPSC of such determination and request that the applicable agencies engage in, or stimulate, further research pursuant to their legislative authority, to develop new and additional scientific data.

(g) If, after a rulemaking, the Secretary determines that the substance under consideration should not be classified as a Category I potential carcinogen or a Category II potential carcinogen, the Secretary shall publish a notice of this determination in the FEDERAL REGISTER, together with the reasons therefor.

MODEL STANDARDS

§ 1990.151 Model standard pursuant to section 6(b) of the Act.

Occupational Exposure to _____

Permanent Standard (insert section number of standard)

(a) *Scope and application*—(1) *General.* This section applies to all occupational exposures to _____ or to (specify those uses or classes of uses of _____ [Chemical Abstracts Service Registry Number 0000] which are covered by the standard, including, where appropriate, the type of exposure to be regulated by the standard) except as provided in paragraph (a)(2).

(2) *Exemptions.* This section does not apply to (insert those uses or classes of uses of _____ which are exempted from compliance with the standard, including, where appropriate,

(i) Workplaces where exposure to _____ results from solid or liquid mixtures containing a specified percentage of _____ or less;

(ii) Workplaces where another Federal agency is exercising statutory authority to prescribe or enforce standards or regulations affecting occupational exposure to _____; or

(iii) Workplaces which are appropriately addressed in a separate standard).

(b) *Definitions.*

_____ means (definition of the substance, group of substances, *or combination of substances, to be regulated*).

Action level means an airborne concentration of _____ of (insert appropriate level of exposure).

NOTE: Where appropriate, consider an action level as a limitation on requirements for periodic monitoring (para. (e)(3)), medical surveillance (para. (n)), training (para. (o)), labels (para. (p)(3)), and other provisions.

Assistant Secretary means the Assistant Secretary of Labor for Occupational Safety and Health, U.S. Department of Labor, or designee.

Authorized person means any person specifically authorized by the employer whose duties require the person to enter regulated areas or any person entering such an area as a designated representative of employees for the purpose of exercising the opportunity to observe monitoring procedures under paragraph (r) of this section.

Director means the Director, National Institute for Occupational Safety and Health, U.S. Department of Health, and Health Services, or designee.

Emergency means in any occurrence such as, but not limited to, equipment failure, rupture of containers, or failure of control equipment which may result in a massive release of _____ which is (insert appropriate quantitative or qualitative level of release which constitutes an emergency).

OSHA Area Office means the Area Office of the Occupational Safety and Health Administration having jurisdiction over the geographic area where the affected workplace is located.

(c) *Permissible exposure limits provisions*—(1) *Inhalation*—(i) *Time weighted average limit (TWA)*. Within (insert appropriate time period) of the effective date of this section, the employer shall assure that no employee is exposed to an airborne concentration of _____in excess of: (insert appropriate exposure limit or when it is determined by the Secretary that there are available suitable substitutes for uses or classes of uses that are less hazardous to humans, the proposal shall permit no occupational exposure) as an eight (8)-hour-time-weighted average.

(Where the Secretary finds that suitable substitutes for _____may exist, the determination of the _____level shall include consideration of the availability, practicability, relative degree of hazard, and economic consequences of the substitutes.)

(ii) *Ceiling limit (if appropriate)*. Within (insert appropriate time period) of the effective date of this section, the employer shall assure that no employee is exposed to an airborne concentration of _____in excess of: (insert exposure limit) as averaged over any: (insert appropriate time period) during the working day.

(2) *Dermal and eye exposure*. (As appropriate.) (i) Within (insert appropriate time period) of the effective date of this section, the employer shall (If eye exposure to _____does not create a risk of cancer, insert exposure level or criteria which will prevent other adverse health effects of eye exposure to _____if any. If eye exposure creates a risk of cancer, insert exposure level or criteria which represents the level of eye exposure to _____).

(ii) Within (insert appropriate time period) of the effective date of this section, the employer shall (If skin exposure to _____does not create a risk of cancer, insert exposure level or criteria which will prevent other adverse health effects of skin exposure to _____if any. If skin exposure creates a risk of cancer, insert exposure level or criteria which represents the level of skin exposure to _____).

(d) *Notification of use and emergencies*—(1) *Use*. Within (insert appropriate time period and additional information requirements if appropriate), of the effective date of this standard or within thirty days of the introduction of _____ into the workplace, every employer who has a place of employment in which _____ is present shall report the address and location of each place of employment to the OSHA Area Office and an estimate of the number of employees exposed.

(2) *Emergencies*. Emergencies, and the facts obtainable at that time, shall be reported within (insert appropriate number) hours of, or during the first federal working day after, the time the employer becomes aware of the emergency to the OSHA Area Office, whichever is longer. Upon request of the OSHA Area Office, the employer shall submit additional information in writing relevant to the nature and extent of employee exposures and measures taken to prevent future emergencies of a similar nature.

(e) *Exposure monitoring*—(1) *General*. (i) Determinations of airborne exposure levels shall be made from air samples that are representative of each employee's exposure to _____ over an eight (8) hour period. (Modify the time period as appropriate to be practical in the relevant industries yet reasonably representative of full shift exposures.) Monitoring of exposure levels required under this paragraph shall be made as

follows: [insert method or alternative methods to be used to meet the requirements of this paragraph].

(ii) For the purpose of this section, employee exposure is that exposure which would occur if the employee were not using a respirator.

(2) *Initial monitoring.* Each employer who has one or more workplaces where (specify the types of workplaces subject to the monitoring requirement) shall, within (insert appropriate period) of the effective date of this section (insert requirements for initial monitoring, as appropriate).

(3) *Frequency.* (Insert, if appropriate, provisions prescribing the minimum frequency at which monitoring must be repeated, the conditions under which such frequency must be increased or may be reduced, and conditions under which such routine monitoring may be discontinued (for example, where the action level is not exceeded). Where appropriate, specify different frequency requirements for certain types of workplaces where, for example, exposure levels are subject to greater or less variability.)

(4) *Additional monitoring.* (Insert, if appropriate, provisions for monitoring, in addition to the requirements (if any) of paragraph (e)(3). This may include a production, process, control or personnel change which might result in new or additional exposure to _____,

or whenever the employer has any other reason to suspect a change which might result in new or additional exposures to _____.)

(5) *Employee notification.* (i) Within (insert appropriate period) after the receipt of monitoring results, the employer shall notify each employee in writing of the results which represent that employee's exposure.

(ii) Whenever the results indicate that the representative employee exposure exceeds the permissible exposure limits, the employer shall include in the written notice a statement that the permissible exposure limits were exceeded and a description of the corrective action being taken to reduce exposure to or below the permissible exposure limits.

(6) *Accuracy of measurement.* (Insert requirements for accuracy of methods of measurement or detection used to comply with the paragraph).

(f) *Regulated areas*—(1) Within (insert appropriate time period) of the effective date of this section, the employer shall, where practicable, establish regulated areas where _____ concentrations are in excess of the permissible exposure limits.

(2) Regulated areas shall be demarcated and segregated from the rest of the workplace, in any manner that minimizes the number of persons who will be exposed to _____.

(3) Access to regulated areas shall be limited to authorized persons or to persons otherwise authorized by the Act or regulations issued pursuant thereto.

(4) The employer shall assure that in the regulated area, food or beverages are not present or consumed, smoking products are not present or used, and cosmetics are not applied (except that these activities may be conducted in the lunchroom, change rooms and showers required under paragraphs (m)(1) through (m)(3) of this section).

(g) *Methods of compliance*—(1) *Engineering and work practice controls.* (i) The employer shall institute engineering or work practice controls to reduce and maintain employee exposures to _____ to or below the permissible exposure limits, except to the extent that the employer establishes that such controls are not feasible.

(ii) Engineering and work practice controls shall be implemented to reduce exposures even if they will not be sufficient to reduce exposures to or below the permissible exposure limits.

(2) *Compliance program.* (i) Within (insert appropriate period) of the effective date of this section, the employer shall establish and implement a written program to reduce exposures to or below the permissible exposure limits by means of engineering and work practice controls, as required by paragraph (g)(1) of this section.

(ii) Written plans for these compliance programs shall include at least the following:

(A) A description of each operation or process resulting in employee exposure to _____;

(B) Engineering plans and other studies contemplated or used to determine the controls for each process;

(C) A report of the technology considered or to be considered in meeting the permissible exposure limits;

(D) A detailed schedule for the implementation of engineering or work practice controls; and

(E) Other relevant information reasonably requested by OSHA.

(iii) Written plans for such a program shall be submitted, upon request, to the Assistant Secretary and the Director, and shall be available at the worksite for examination and copying by the Assistant Secretary, the Director, or any affected employee or designated representative.

(iv) The plans required by this paragraph shall be revised and updated periodically to reflect the current status of the program.

(h) *Respiratory protection*—(1) *General*. The employer shall assure that respirators are used where required pursuant to this section to reduce employee exposures to or below the permissible exposure limits and in emergencies. Compliance with the permissible exposure limits may not be achieved by the use of respirators except:

(i) During the time period necessary to install or implement feasible engineering and work practice controls; or

(ii) In work operations in which the employer establishes that engineering and work practice controls are not feasible; or

(iii) In work situations where feasible engineering and work practice controls are not yet sufficient to reduce exposure to or below the permissible exposure limits; or

(iv) In emergencies.

(2) *Respirator selection*. (i) Where respiratory protection is required under this section, the employer shall select and provide at no cost to the employee, the appropriate type of respirator from Table 1 below and shall assure that the employee wears the respirator provided.

TABLE 1—RESPIRATORY PROTECTION

FOR _____

(The table will contain a listing of the appropriate type of respirator for various conditions of exposure to _____).

(ii) The employer shall select respirators from those approved by the National Institute for Occupational Safety and Health under the provisions of 30 CFR part 11.

(3) *Respirator program*. (i) The employer shall institute a respiratory protection program in accordance with 29 CFR 1910.134 (b), (d), (e), and (f).

(ii) Employees who wear respirators shall be allowed to wash their face and respirator facepiece to prevent potential skin irritation associated with respirator use.

(iii) The employer shall assure that the respirator issued to each employee is properly fitted (as appropriate, indicate the requirement for a qualitative or quantitative respirator fit testing program).

(i) *Emergency situations*—(1) *Written plans*. (i) A written plan for emergency situations shall be developed for each workplace where _____ is present. Appropriate portions of the plan shall be implemented in the event of an emergency.

(ii) The plan shall specifically provide that employees engaged in correcting emergency conditions shall be equipped with respirators as required in paragraph (h) of this section and other necessary personal protective equipment as required in paragraph (j) until the emergency is abated.

(2) *Alerting employees*—(i) *Alarms*. Where there is the possibility of employee exposure to _____ due to the occurrence of an emergency, a general alarm shall be installed and maintained to promptly alert employees of such occurrences.

(ii) *Evacuation*. Employees not engaged in correcting the emergency shall be restricted from the area and shall not be permitted to return until the emergency is abated.

(j) *Protective clothing and equipment*—(1) *Provision and use*. Where employees are exposed to eye or skin contact with _____ (insert criteria which trigger this requirement as appropriate), the employer shall, within (insert appropriate time period) of the effective date of this section provide at no cost to such employees, and assure that such employees wear, appropriate protective clothing or other equipment in accordance with 29 CFR 1910.132 and 1910.133 to protect the area of the body which may come in contact with _____.

(2) *Cleaning and replacement*. (i) The employer shall clean, launder, maintain, or replace protective clothing and equipment required to maintain their effectiveness.

(k) *Housekeeping*—(1) *General*. The employer shall, within appropriate time period of the effective date of this section, implement a housekeeping program to minimize accumulation of _____.

(2) *Specific provisions*. The program shall include (insert appropriate elements).

(i) Periodic scheduling of routine housekeeping.

(ii) Provision for periodic cleaning of dust collection systems.

(iii) Provision for maintaining clean surfaces.

(iv) Provision for assigning personnel to housekeeping procedures; and the

(v) Provision for informing employees about housekeeping program.

(l) *Waste disposal*—(1) *General*. The employer shall assure that no waste material containing _____ is dispersed into the workplace, to the extent practicable.

(2) The employer shall label, or otherwise inform employees who may contact waste material containing _____, the contents of such waste material.

(3) (Insert specific disposal methods, as appropriate.)

(m) *Hygiene facilities and practices*. Where employees are exposed to airborne concentrations of _____ in excess of the permissible exposure limits specified in paragraph (c)(1), or where employees are required to wear protective clothing or equipment pursuant to paragraph (j) of this section, or where otherwise found to be appropriate, the following facilities shall be provided by the employer for the use of those employees and the employer shall assure that the employees use the facilities provided.

[Specify appropriate hygiene facilities and practices such as]:

(1) *Change rooms*. The employer shall provide clean change rooms in accordance with 29 CFR 1910.141(e).

(2) *Showers*. (i) The employer shall provide shower facilities in accordance with 29 CFR 1910.141(d)(3).

(ii) The employer shall assure that employees exposed to _____ shower at the end of the work shift.

(3) *Lunchrooms* (if appropriate or other suitable requirements depending on the circumstances). Whenever food or beverages are consumed in the workplace, the employer shall provide lunchroom facilities which have a temperature controlled, positive pressure, filtered air supply, and which are readily accessible to employees exposed to _____.

(n) *Medical surveillance*—(1) *General*. (i) The employer shall institute a program of medical surveillance for (specify the types of employees subject to the medical surveillance requirement, for example, by specifying the level, duration, and frequency of exposure to _____ which make medical surveillance appropriate for individual employees). The employer shall provide each such employee with an opportunity for medical examinations and tests in accordance with this paragraph.

(ii) The employer shall assure that all medical examinations and procedures are performed by or under the supervision of a licensed physician, and shall be provided without cost to the employee.

(2) *Initial examinations*. Within (insert appropriate time period) of the effective date of this section or thereafter at the time of initial assignment, the employer shall provide each employee specified in paragraph (n)(1) of this section an opportunity for a medical examination, including at least the following elements:

(i) A work history and a medical history which shall include: (insert specific areas to be covered pertinent to the health hazards posed by _____).

(ii) A physical examination which shall include: (insert specific tests, procedures, etc., pertinent to the health hazards posed by _____.) Where appropriate, provide that the examining physician shall conduct such additional examinations and tests as are needed according to his professional judgment).

NOTE: Where appropriate, require or permit different medical protocols, or different frequencies of medical examinations, for separate sub-populations of employees covered under paragraph (n)(1).

(3) *Periodic examinations.* (i) The employer shall provide the examinations specified below in this subparagraph at least (insert appropriate time) for all employees specified in paragraph (n)(3)(i) of this section: (insert appropriate medical protocol for periodic examinations).

(ii) If an employee has not had the examinations prescribed in paragraph (n)(3)(i) of this section within (insert appropriate time period) prior to termination of employment, the employer shall make such examination available to the employee upon such termination.

(4) *Additional examinations.* If the employee for any reason develops signs or symptoms commonly associated with exposure to _____, the employer shall provide appropriate examination and emergency medical treatment.

(5) *Information provided to the physician.* The employer shall provide the following information to the examining physician:

(i) A copy of this standard and its appendices;

(ii) A description of the affected employee's duties as they relate to the employee's exposure;

(iii) The employee's actual or representative exposure level;

(iv) The employee's anticipated or estimated exposure level (for preplacement examinations or in cases of exposure due to an emergency);

(v) A description of any personal protective equipment used or to be used; and

(vi) The names and addresses of physicians who, under the sponsorship of the employer, provided previous medical examinations of the affected employee, if such records are not otherwise available to the examining physician.

(6) *Physician's written opinion.* (i) The employer shall obtain a written opinion from the examining physician which shall include:

(A) The physician's certification that he has received the information from the employer required under the paragraph (n)(5) and has performed all medical examinations and tests which are in his opinion appropriate under this standard;

(B) The physician's opinion as to whether the employee has any detected medical condition which would place the employee at an increased risk of material impairment of the employee's health from exposure to _____;

(C) Any recommended limitations upon the employee's exposure to _____ or upon the use of protective clothing and equipment such as respirators; and

(D) A statement that the employee has been informed by the physician of the results of the medical examination and any medical conditions which require further examination or treatment.

(ii) The employer shall instruct the physician not to reveal in the written opinion specific findings or diagnoses unrelated to occupational exposure to _____;

(iii) The employer shall provide a copy of the written opinion to the affected employee.

(o) *Employee information and training*—(1) *Training program.* (i) Within (insert appropriate time period) from the effective date of this section, the employer shall institute a training program for all employees who (specify the employees subject to the training requirement), and shall assure their participation in the training program.

(ii) The training program shall be provided at the time of initial assignment, or upon institution of the training program, and at least (insert appropriate time period) thereafter, and the employer shall assure that each employee is informed of the following:

NOTE: Specify, as appropriate, some or all of the following information, or any other appropriate information. Where appropriate, require training programs with different contents, or different frequencies, for separate subpopulations of the employees specified in paragraph (o)(1).

(A) The information contained in the Appendices;

(B) The quantity, location, manner of use, release or storage of _____ and the specific nature of operations which could result in exposure to _____, as well as any necessary protective steps;

(C) The purpose, proper use, and limitations of respirators;

(D) The purpose and a description of the medical surveillance program required by paragraph (n) of this section;

(E) The emergency procedures developed, as required by paragraph (i) of this section;

(F) The engineering and work practice controls, their function and the employee's relationship thereto; and

(G) A review of this standard.

(2) *Access to training materials.* (i) The employer shall make a copy of this standard and its appendices readily available to all affected employees.

(ii) The employer shall provide, upon request, all materials relating to the employee information and training program to the Assistant Secretary and the Director.

(p) *Signs and labels*—(1) *General.* (i) The employer may use labels or signs required by other statutes, regulations, or ordinances in addition to, or in combination with, signs and labels required by this paragraph.

(ii) The employer shall assure that no statement appears on or near any sign or label, required by this paragraph, which contradicts or detracts from the meaning of the required sign or label.

(2) *Signs.* (i) The employer shall post signs to clearly indicate all workplaces. (Specify as appropriate the description of the area to be signposted such as ''where employees are exposed to _____,'' or ''where exposures exceed the action level,'' or ''where exposures exceed the PEL,'' or ''which are regulated areas''). The signs shall bear the following legend:

DANGER

_____

(insert appropriate trade or common names)

CANCER HAZARD

AUTHORIZED PERSONNEL ONLY

(ii) The employer shall assure that signs required by this paragraph are illuminated and cleaned as necessary so that the legend is readily visible.

(iii) Where airborne concentrations of _____ exceed the permissible exposure limits, the signs shall bear the additional legend: ''Respirator Required'' or ''Respirator May Be Required'' as appropriate.

(3) *Labels.* (i) The employer shall assure that precautionary labels are affixed to all containers of _____ and of products containing _____ (specify if appropriate suitable modifications), and that the labels remain affixed when the _____ or products containing _____ are sold, distributed or otherwise leave the employer's workplace.

(ii) The employer shall assure that the precautionary labels required by this paragraph are readily visible and legible. The labels shall bear the following legend:

DANGER

CONTAINS _____

CANCER HAZARD

NOTE: Utilize the clause ''POTENTIAL CANCER HAZARD'' if it is appropriate to include a signs and labels provision for a Category II potential carcinogen.

(q) *Recordkeeping*—(1) *Exposure monitoring.* (i) The employer shall establish and maintain an accurate record of all monitoring required by paragraph (e) of this section.

(ii) This record shall include:

(A) The dates, number, duration, and results of each of the samples taken, including a description of the sampling procedure used to determine representative employees exposure;

(B) A description of the sampling and analytical methods used;

(C) Type of respiratory protective devices worn, if any; and

(D) Name, social security number and job classification of the employees monitored and of all other employees whose exposure the measurement is intended to represent.

(iii) The employer shall maintain this record for (insert appropriate period) or for the duration of employment plus (insert appropriate period) whichever is longer.

(2) *Medical surveillance.* (i) The employer shall establish and maintain an accurate record of each employee subject to medical surveillance as required by paragraph (n) of this section.

(ii) This record shall include:

(A) A copy of the physicians' written opinions or a written explanation of

the absence of any such opinion or employee refusal to take the medical examination:

(B) Any employees medical complaints related to exposure

to _____;

(C) A copy of the information provided to the physician as required by paragraphs (n)(5)(ii) through (v) of this section unless it is systematically retained elsewhere by the employer for the period of time specified in paragraph (q)(2)(ii); and

(D) A copy of the employee's work history.

(iii) The employer shall assure that this record be maintained for (insert appropriate period) or for the duration of employment plus (insert appropriate period) whichever is longer.

(3) *Availability*. (i) The employer shall assure that all records required to be maintained by this section be made available upon request to the Assistant Secretary and the Director for examination and copying.

(ii) Employee exposure measurement records and employee medical records required by this section shall be provided upon request to employees, designated representatives, and the Assistant Secretary in accordance with 29 CFR 1910.20(a) through (e) and (g) through (i).

(4) *Transfer of records*. (i) Whenever the employer ceases to do business, the successor employer shall receive and retain all records required to be maintained by this section.

(ii) Whenever the employer ceases to do business and there is no successor employer to receive and retain the records for the prescribed period, these records shall be transmitted to the Director.

(iii) At the expiration of the retention period for the records required to be maintained pursuant to this section, the employer shall transmit these records to the Director.

(iv) The employer shall also comply with any additional requirements involving transfer of records set forth in 29 CFR 1910.20(h).

NOTE: Include other recordkeeping requirements if appropriate.

(r) *Observation of monitoring*—(1) *Employee observation*. The employer shall provide affected employees, or their designated representatives, an opportunity to observe any monitoring of employee exposure to _____ conducted pursuant to paragraph (e) of this section.

(2) *Observation procedures*. (i) Whenever observation of the monitoring of employee exposure to _____ requires entry into an area where the use of protective clothing or equipment is required, the employer shall provide the observer with personal protective clothing or equipment required to be worn by employees working in the area, assure the use of such clothing and equipment, and require the observer to comply with all other applicable safety and health procedures.

(ii) Without interfering with the monitoring, observers shall be entitled to:

(A) Receive an explanation of the measurement procedures;

(B) Observe all steps related to the measurement of airborne concentrations of _____ performed at the place of exposure; and

(C) Record the results obtained, and receive results supplied by the laboratory.

(s) *Effective date*. This section shall become effective (insert effective date).

(t) *Appendices*. The information contained in the appendices is not intended, by itself, to create any additional obligations not otherwise imposed or to detract from any existing obligation. (In normal circumstances three appendices will be included in each standard, an ''Appendix A—Substance Safety Data Sheet,'' an ''Appendix B—Substance Technical Guidelines,'' and an ''Appendix C—Medical Surveillance Guidelines.'' Insert additional appendices or delete any of the suggested appendices as appropriate.)

[45 FR 5282, Jan. 22, 1980; 45 FR 43405–43406, June 27, 1980, as amended at 46 FR 5881, Jan. 21, 1981]

§ 1990.152 Model emergency temporary standard pursuant to section 6(c) of the Act.

Occupational Exposure to _____;

Emergency Temporary Standard (insert section number of standard)

(a) *Scope and application*—(1) *General.* This section applies to all occupational exposures to _____, or to (specify the uses of classes of uses of _____ [Chemical Abstracts Service Registry Number 00000], which are covered by the standard, including, where appropriate, the type of exposure to be regulated by the standard) except as provided in paragraph (a)(2).

(2) *Exemption.* This section does not apply to (insert those uses or classes of uses of _____ which are exempted from compliance with the standard, including, where appropriate,

(i) Workplaces where exposure to _____ results from solid or liquid mixtures containing a specified percentage of _____ or less;

(ii) Workplaces where another Federal agency is exercising statutory authority to prescribe or enforce standards or regulations affecting occupational exposure to _____ or

(iii) Workplaces which are appropriately addressed in a separate standard.

(b) *Definitions.*

_____ means (definition of the substance, group of substances, or combination of substances, to be regulated).

Action level means an airborne concentration of _____ of (insert appropriate level of exposure).

NOTE: Where appropriate, consider an action level as a limitation on requirements for periodic monitoring (para. (e)(3)), medical surveillance (para. (n)), training (para, (o)), and other provisions.

Assistant Secretary means the Assistant Secretary of Labor for Occupational Safety and Health, U.S. Department of Labor, or designee.

Authorized person means any person specifically authorized by the employer whose duties require the person to enter a regulated area or any person entering such an area as a designated representative of employees exercising the opportunity to observe monitoring procedures under paragraph (r) of this section.

Director means the Director, National Institute for Occupational Safety and Health, U.S. Department of Health, Education and Welfare, or designee.

Emergency means any occurrence such as, but not limited to, equipment failure, rupture of containers, or failure of control equipment which may result in a release of _____ which is (insert appropriate quantitative or qualitative level of release which constitutes an emergency).

OSHA Area Office means the Area Office of the Occupational Safety and Health Administration having jurisdiction over the geographic area where the affected workplace is located.

(c) *Permissible exposure limits*—(1) *Inhalation*—(i) *Time-weighted average limit (TWA).* Within (insert appropriate time) from the effective date of this emergency temporary standard, the employer shall assure that no employee is exposed to an airborne concentration of _____in excess of: (insert appropriate exposure limit representing a level that can be complied with immediately) as an eight (8)-hour-time-weighted average.

(ii) *Ceiling limit (if appropriate).* The employer shall assure that no employee is exposed to an airborne concentration of _____in excess of: (insert appropriate exposure limit representing a level that can be complied with immediately) as averaged over any: (insert appropriate time period) during the working day.

(2) *Dermal and eye exposure.* (As appropriate.) (i) Within (insert appropriate time period) of the effective date of this section, the employer shall (If eye exposure to _____does not create a risk of cancer, insert exposure level or criteria which will prevent other adverse effects of eye exposure to _____, if any. If eye exposure creates a risk of cancer, insert exposure level or criteria which represent the level of eye exposure to _____.)

(ii) Within (insert appropriate time period) of the effective date of this section, the employer shall (If skin exposure to _____does not create a risk of cancer, insert exposure level or criteria which will prevent other adverse health affects of skin exposure to

_____if any. If skin exposure creates a risk of cancer, insert exposure level or criteria which represents the level of skin exposure to _____).

(d) *Notification of use.* Within (insert appropriate time and omit specific categories of information if appropriate) of the effective date of this section, or within fifteen (15) days following the introduction of _____ into the workplace, every employer shall report the following information to the nearest OSHA Area Office for each such workplace:

(1) The address and location of each workplace in which _____ is present;

(2) A brief description of each process or operation which may result in employee exposure to _____;

(3) The number of employees engaged in each process or operation who may be exposed _____ and an estimate of the frequency and degree of exposure that occurs; and

(4) A brief description of the employer's safety and health program as it relates to limitation of employee exposure to _____;

(e) *Exposure monitoring*—(1) *General.* (i) Determinations of airborne exposure levels shall be made from air samples that are representative of each employee's exposure to _____ over an eight (8) hour period. (Modify the time period as appropriate to be practical in the relevant industries yet reasonably representative of full shift exposures). Monitoring of exposure levels required under this paragraph shall be made as follows: [insert method or alternative methods to be used to meet the requirements of this paragraph].

(ii) For the purposes of this section, employee exposure is that exposure which would occur if the employee were not using a respirator.

(2) *Initial monitoring.* Each employer who has one or more workplaces where (specify the types of workplaces subject to the monitoring requirement), shall within (insert appropriate period) of the effective date of this section (insert requirements for initial monitoring, as appropriate).

(3) *Frequency.* (Insert, if appropriate, provisions prescribing the minimum frequency at which monitoring must be repeated, the conditions under which such frequency must be increased, or may be reduced, and conditions under which such routine monitoring may be discontinued (for example where the action level is not exceeded). Where appropriate, specify different frequency requirements for certain types of workplaces where, for example, exposure levels are subject to greater or less variability.)

(4) *Additional monitoring.* (Insert, if appropriate, provisions for monitoring, in addition to the requirements (if any) of paragraph (e)(3). This may include a production, process, control or personnel change which might result in new or additional exposure to _____ or whenever the employer has any other reason to suspect a change which might result in new or additional exposures to _____.)

(5) *Employee notification.* (i) Within (insert appropriate period) after the receipt of monitoring results, the employer shall notify each employee in writing of the results which represent that employee's exposure.

(ii) Whenever the results indicate that the representative employee exposure exceeds the permissible exposure limits, the employer shall include in the written notice a statement that permissible exposure limits were exceeded and a description of the corrective action being taken to reduce exposure to or below the permissible exposure limits.

(6) *Accuracy of measurement.* (Insert requirements for accuracy of methods of measurement or detection used to comply with the paragraph.)

(f) [Reserved]

(g) *Methods of compliance*—(1) *General.* (i) Employee exposures to _____ shall be controlled to or below the permissible exposure limits by any practicable combination of engineering controls, work practices and personal protective devices and equipment, during the effective period of this emergency temporary standard.

NOTE: Where engineering controls or work practices can reduce employee exposures to _____ it is recommended that they be implemented where practicable, even where they do not themselves reduce exposures to, or below the permissible exposure limits. Work practices which can be implemented by the employer to help reduce employee exposures to _____ include limiting access to work areas to authorized personnel, prohibiting

smoking and consumption of food and beverages in work areas, and establishing good maintance and housekeeping practices, including the prompt clean-up of spills and repair of leaks.

(2) *Engineering and work practice control plan.* (i) Within (insert appropriate time period) of the effective date of this emergency temporary standard, the employer shall develop a written plan describing proposed means to reduce employee exposures to the lowest feasible level by means of engineering and work practice controls (which will be eventually required by a permanent standard for occupational exposure to _____, as provided for by § 1990.151(g) of this subpart).

(ii) Written plans required by this paragraph shall be submitted, upon request, to the Assistant Secretary and the Director and shall be available at the worksite for examination and copying by the Assistant Secretary, the Director, and any affected employee or designated representative.

(h) *Respiratory protection*—(1) *Required use.* The employer shall assure that respirators are used where required pursuant to this section to reduce employee exposures to within the permissible exposure limits and in emergencies.

(2) *Respirator selection.* (i) Where respiratory protection is required under this section, the employer shall select and provide at no cost to the employee, the appropriate respirator from Table 1 below and shall assure that the employee wears the respirator provided.

TABLE 1—RESPIRATORY PROTECTION FOR

_____

(The table will contain a listing of the appropriate type of respirator for various conditions of exposure to _____.)

(ii) The employer shall select respirators from those approved by the National Institute for Occupational Safety and Health under the provisions of 30 CFR part 11.

(3) *Respirator program.* (i) The employer shall institute a respirator protection program in accordance with 29 CFR 1910.134 (b), (d), (e) and (f).

(ii) Employees who wear respirators shall be allowed to wash their face and respirator face piece to prevent potential skin irritation associated with respirator use.

(iii) The employer shall assure that the respirator issued to each employee is properly fitted (as appropriate, indicate the requirement for a qualitative or quantitative respirator fit testing program.)

(i) [Reserved]

(j) *Protective clothing and equipment*—(1) *Provision and use.* Where employees are exposed to eye or skin contact with _____ (insert criteria which trigger this requirement as appropriate), the employer shall within (insert appropriate time period) of the effective date of this standard provide, at no cost to the employees, and assure that employees wear, appropriate protective clothing or other equipment in accordance with 29 CFR 1910.132 and 1910.133 to protect the area of the body which may come in contact with _____.

(2) *Cleaning and replacement.* (i) The employer shall clean, launder, maintain, or replace protective clothing and equipment required by this paragraph, as needed to maintain their effectiveness.

(k) *Housekeeping*—(1) *General.* The employer shall, within (insert appropriate time period) of the effective date of this section, implement a housekeeping program to minimize accumulations of _____.

(2) *Specific provisions.* The program shall include (insert appropriate elements):

(i) Periodic scheduling of routine housekeeping procedures;

(ii) Provision for periodic cleaning of dust collection systems;

(iii) Provision for maintaining clean surfaces;

(iv) Provision for assigning personnel to housekeeping procedures; and

(v) Provision for informing employees about housekeeping program.

(l) *Waste disposal*—(1) *General.* The employer shall assure that no waste material containing _____ is dispersed into the workplace, to the extent practicable.

(2) The employer shall label, or otherwise inform employees who may contact waste material containing _____ of the contents of such waste material.

(3) (Insert specific disposal methods, as appropriate.)

(m) [Reserved]

(n) *Medical surveillance*—(1) *General.* (i) The employer shall institute a program of medical surveillance for (specify the types of employees subject to the medical surveillance requirement, for example, by specifying the level, duration, and frequency of exposure to _____ which make medical surveillance appropriate for individual employees). The employer shall provide each such employee with an opportunity for medical examinations and tests in accordance with this paragraph.

(ii) The employer shall assure that all medical examinations and procedures are performed by or under the supervision of a licensed physician, and shall be provided without cost to the employee.

(2) *Initial examinations.* Within (insert appropriate time period) of the effective date of this section, or thereafter at the time of initial assignment, the employer shall provide each employee specified in paragraph (n)(1) of this section an opportunity for a medical examination, including at least the following elements:

(i) A work history and a medical history which shall include (insert specific areas to be covered pertinent to the health hazards posed by _____).

(ii) A physical examination which shall include: (insert specific tests, procedures, etc., pertinent to the health hazards posed by _____. Where appropriate, provide that the examining physician shall conduct such additional examinations and tests as are needed according to his professional judgement).

NOTE: Where appropriate, require or permit different medical protocols, or different frequencies of medical examinations, for separate sub-populations of employees covered under paragaph (n)(1).

(3) *Periodic examinations.* (If appropriate insert appropriate medical protocol and time.)

(4) *Additional examinations.* If the employee for any reason develops signs or symptoms commonly associated with exposure to _____, the employer shall provide an appropriate examination and emergency medical treatment.

(5) *Information provided to the physician.* The employer shall provide the following information to the examining physician:

(i) A copy of this emergency temporary standard and its appendices;

(ii) A description of the affected employee's duties as they relate to the employee's exposure;

(iii) The employee's actual or representative exposure level;

(iv) The employee's anticipated or estimated exposure level (for preplacement examinations or in cases of exposures due to an emergency);

(v) A description of any personal protective equipment used or to be used; and

(vi) The names and addresses of physicians who, under the sponsorship of the employer, provided previous medical examinations of the affected employee, if such records are not otherwise available to the examining physician.

(6) *Physician's written opinion.* (i) The employer shall obtain a written opinion from the examining physician which shall include:

(A) The results of the medical tests performed;

(B) The physician's opinion as to whether the employee has any detected medical condition which would place the employee at an increased risk of material impairment of the employee's health from exposure to _____;

(C) Any recommended limitations upon the employee's exposure to _____ or upon the use of protective clothing and equipment such as respirators; and

(D) A statement that the employee has been informed by the physician of the results of the medical examination and any medical conditions which require further examination or treatment.

(ii) The employer shall instruct the physician not to reveal in the written opinion specific findings or diagnoses unrelated to occupational exposure to _____;

(iii) The employer shall provide a copy of the written opinion to the affected employee.

(o) *Employee information and training*—(1) *Training program.* (i) Within (insert appropriate time period) from the effective date of this standard, the employer shall institute a training program for all employees who (specify

the employees subject to the training requirement), and shall assure their participation in the training program.

(ii) The employer shall assure that each employee is informed of the following:

(A) The information contained in the Appendices;

(B) The quantity, location, manner of use, release, or storage of _____ and the specific nature of operations which could result in exposure to _____, as well as any necessary protective steps;

(C) The purpose, proper use, and limitations of respirators;

(D) The purpose and description of the medical surveillance program required by paragraph (n) of this section; and

(E) A review of this standard.

(2) *Access to training materials*. (i) The employer shall make a copy of this standard and its appendices readily available to all affected employees.

(ii) The employer shall provide, upon request, all materials relating to the employee information and training program to the Assistant Secretary and the Director.

(p) *Signs and labels* (include a signs or a signs and labels provision if it is appropriate for the duration of the ETS)—(1) *General*. (i) The employer may use labels or signs required by other statutes, regulations, or ordinances in addition to, or in combination with, signs and labels required by this paragraph.

(ii) The employer shall assure that no statement appears on or near any sign or label, required by this paragraph, which contradicts or detracts from the meaning of the required sign or label.

(2) *Signs*. (i) The employer shall post signs to clearly indicate all workplaces (specify as appropriate the description of the area to be signposted such as ''where employees are exposed to _____,'' or ''where exposures exceed the PEL,'' or ''which are regulated areas''). The signs shall bear the following legend:

DANGER

_____

(insert appropriate trade or common names)

CANCER HAZARD

AUTHORIZED PERSONNEL ONLY

(ii) The employer shall assure that signs required by this paragraph are illuminated and cleaned as necessary so that the legend is readily visible.

(iii) Where airborne concentrations of _____ exceed the permissible exposure limits, the signs shall bear the additional legend: (''Respirator Required'' or ''Respirator may be Required'' as appropriate).

(3) *Labels*. (i) The employer shall assure that precautionary labels are affixed to all containers of _____ and of products containing _____ (specify if appropriate suitable modifications), and that the labels remain affixed when _____ or products containing _____ are sold, distributed or otherwise leave the employer's workplace.

(ii) The employer shall assure that the precautionary labels required by this paragraph are readily visible and legible. The labels shall bear the following legend:

DANGER

CONTAINS _____

CANCER HAZARD

(q) *Recordkeeping*—(1) *Exposure monitoring*. (i) The employer shall establish and maintain an accurate record of all monitoring required by paragraph (e) of this section.

(ii) This record shall include:

(A) The dates, number, duration, and results of each of the samples taken, including a description of the sampling procedures used to determine representative employee exposure;

(B) A description of the sampling and analytical methods used;

(C) Type of respiratory protective devices worn, if any; and

(D) Name, social security number, and job classification of the employee monitored and of all other employees whose exposure the measurement is intended to represent.

(iii) The employer shall maintain this record for the effective period of this emergency temporary standard, and for any additional period required by the permanent standard.

(2) *Medical surveillance.* (i) The employer shall establish and maintain an accurate record for each employee subject to medical surveillance as required by paragraph (n) of this section.

(ii) This record shall include:

(A) A copy of the physicians' written opinions or a written explanation of the absence of any such opinion or employee refusal to take the medical examination;

(B) Any employee medical complaints related to exposure to _____;

(C) A copy of the information provided to the physician as required by paragraphs (n)(5)(ii)–(iv) of this section unless it is systematically retained elsewhere by the employer for the period of time specified in paragraph (q)(2)(iii); and,

(D) A copy of the employee's work history. (*1*) The employer shall assure that employee exposure measurement records, as required by this section, be made available upon request to the Assistant Secretary and the Director for examination and copying.

(iii) The employer shall assure that this record be maintained for the effective period of this emergency temporary standard, and for any additional period required by the permanent standard.

(3) *Availability.* (i) The employer shall assure that all records required to be maintained by this section be made available upon request, to the Assistant Secretary and the Director for examination and copying.

(ii) Employee exposure measurement records and employee medical records required by this section shall be provided upon request to employees, designated representatives, and the Assistant Secretary in accordance with 29 CFR 1910.20 (a) through (e) and (g) through (i).

(r) *Observation of monitoring.* (1) Employee observation. The employer shall provide affected employees, or their designated representatives, an opportunity to observe any monitoring of employee exposure to _____ conducted pursuant to paragraph (e) of this section.

(2) *Observation procedures.* (i) Whenever observation of the monitoring of employee exposure to _____ requires entry into an area where the use of protective clothing or equipment is required, the employer shall provide the observer with personal protective clothing or equipment required to be worn by employees working in the area, assure the use of such clothing and equipment, and require the observer to comply with all other applicable safety and health procedures.

(ii) Without interfering with the monitoring, observers shall be entitled to:

(A) Receive an explanation of measurement procedures;

(B) Observe all steps related to the measurement of airborne concentrations of _____ performed at the place of exposure; and

(C) Record the results obtained and receive results supplied by the laboratory.

(s) *Effective date.* This section shall become effective (insert effective date).

(t) *Appendices.* The information contained in the appendices is not intended, itself, to create any additional obligations not otherwise imposed or to detract from any existing obligation. (In normal circumstances three appendices will be included in each standard, an ''Appendix A—Substance Safety Data Sheet,'' an ''Appendix B—Substance Technical Guidelines,'' and an ''Appendix C—Medical Surveillance Guidelines.'' Insert additional appendices or delete any of the suggested appendices as appropriate.)

[45 FR 5282, Jan. 22, 1980; 45 FR 43406–43407, June 27, 1980, as amended at 46 FR 5882, Jan. 21, 1981]

PARTS 1991–1999 [RESERVED]

CHAPTER XX—OCCUPATIONAL SAFETY AND HEALTH REVIEW COMMISSION

Part		*Page*
2200	Rules of procedure	345
2201	Regulations implementing the Freedom of Information Act	380
2202	[Reserved]	
2203	Regulations implementing the Government in the Sunshine Act	389
2204	Implementation of the Equal Access to Justice Act in proceedings before the Occupational Safety and Health Review Commission	394
2205	Enforcement of nondiscrimination on the basis of disability in programs or activities conducted by the Occupational Safety and Health Review Commission and in accessibility of Commission electronic and information technology	399
2400	Regulations implementing the Privacy Act	406
2401–2499	[Reserved]	

PART 2200—RULES OF PROCEDURE

Subpart A—General Provisions

Sec.
2200.1 Definitions.
2200.2 Scope of rules; applicability of Federal Rules of Civil Procedure; construction.
2200.3 Use of gender and number.
2200.4 Computation of time.
2200.5 Extension of time.
2200.6 Record address.
2200.7 Service and notice.
2200.8 Filing.
2200.9 Consolidation.
2200.10 Severance.
2200.11 [Reserved]
2200.12 References to cases.

Subpart B—Parties and Representatives

2200.20 Party status.
2200.21 Intervention; appearance by nonparties.
2200.22 Representation of parties and intervenors.
2200.23 Appearances and withdrawals.
2200.24 Brief of an amicus curiae.

Subpart C—Pleadings and Motions

2200.30 General rules.
2200.31 Caption; titles of cases.
2200.32 Signing of pleadings and motions.
2200.33 Notices of contest.
2200.34 Employer contests.
2200.35 Disclosure of corporate parents, subsidiaries, and affiliates.
2200.36 [Reserved]
2200.37 Petitions for modification of the abatement period.
2200.38 Employee contests.
2200.39 Statement of position.
2200.40 Motions and requests.
2200.41 [Reserved]

Subpart D—Prehearing Procedures and Discovery

2200.50 [Reserved]
2200.51 Prehearing conferences and orders.
2200.52 General provisions governing discovery.
2200.53 Production of documents and things.
2200.54 Requests for admissions.
2200.55 Interrogatories.
2200.56 Depositions.
2200.57 Issuance of subpoenas; petitions to revoke or modify subpoenas; right to inspect or copy data.

Subpart E—Hearings

2200.60 Notice of hearing; location.
2200.61 Submission without hearing.
2200.62 Postponement of hearing.
2200.63 Stay of proceedings.
2200.64 Failure to appear.
2200.65 Payment of witness fees and mileage; fees of persons taking depositions.
2200.66 Transcript of testimony.
2200.67 Duties and powers of Judges.
2200.68 Disqualification of the Judge.
2200.69 Examination of witnesses.
2200.70 Exhibits.
2200.71 Rules of evidence.
2200.72 Objections.
2200.73 Interlocutory review.
2200.74 Filing of briefs and proposed findings with the Judge; oral argument at the hearing.

Subpart F—Posthearing Procedures

2200.90 Decisions of Judges.
2200.91 Discretionary review; petitions for discretionary review; statements in opposition to petitions.
2200.92 Review by the Commission.
2200.93 Briefs before the Commission.
2200.94 Stay of final order.
2200.95 Oral argument before the Commission.
2200.96 Commission receipt pursuant to 28 U.S.C. 2112(a)(1) of copies of petitions for judicial review of Commission orders when petitions for review are filed in two or more courts of appeals with respect to the same order.

Subpart G—Miscellaneous Provisions

2200.100 Settlement.
2200.101 Failure to obey rules.
2200.102 Withdrawal.
2200.103 Expedited proceeding.
2200.104 Standards of conduct.
2200.105 Ex parte communication.
2200.106 Amendment to rules.
2200.107 Special circumstances; waiver of rules.
2200.108 Official Seal of the Occupational Safety and Health Review Commission.

Subpart H—Settlement Part

2200.120 Settlement procedure.

Subparts I–L [Reserved]

Subpart M—Simplified Proceedings

2200.200 Purpose.
2200.201 Application.
2200.202 Eligibility for Simplified Proceedings.
2200.203 Commencing Simplified Proceedings.
2200.204 Discontinuance of Simplified Proceedings.
2200.205 Filing of pleadings.
2200.206 Disclosure of information.
2200.207 Pre-hearing conference.
2200.208 Discovery.

2200.209 Hearing.
2200.210 Review of Judge's decision.
2200.211 Applicability of subparts A through G.

AUTHORITY: 29 U.S.C. 661(g), unless otherwise noted.

Section 2200.96 is also issued under 28 U.S.C. 2112(a).

SOURCE: 51 FR 32015, Sept. 8, 1986, unless otherwise noted.

Subpart A—General Provisions

§ 2200.1 Definitions.

As used herein:

(a) *Act* means the Occupational Safety and Health Act of 1970, 29 U.S.C. 651–678.

(b) *Commission*, *person*, *employer*, and *employee* have the meanings set forth in section 3 of the Act, 29 U.S.C. 652.

(c) *Secretary* means the Secretary of Labor or his duly authorized representative.

(d) *Executive Secretary* means the Executive Secretary of the Commission.

(e) *Affected employee* means an employee of a cited employer who is exposed to or has access to the hazard arising out of the allegedly violative circumstances, conditions, practices or operations.

(f) *Judge* means an Administrative Law Judge appointed by the Chairman of the Commission pursuant to section 12(j) of the Act, 29 U.S.C. 661(j), as amended by Pub. L. 95–251, 92 Stat. 183, 184 (1978).

(g) *Authorized employee representative* means a labor organization that has a collective bargaining relationship with the cited employer and that represents affected employees.

(h) *Representative* means any person, including an authorized employee representative, authorized by a party or intervenor to represent him in a proceeding.

(i) *Citation* means a written communication issued by the Secretary to an employer pursuant to 9(a) of the Act, 29 U.S.C. 658(a).

(j) *Notification of proposed penalty* means a written communication issued by the Secretary to an employer pursuant to 10 (a) or (b) of the Act, 29 U.S.C. 659(a) or (b).

(k) *Day* means a calendar day.

(l) *Working day* means all days except Saturdays, Sundays, or Federal holidays.

(m) *Proceeding* means any proceeding before the Commission or before a Judge.

(n) *Pleadings* are complaints and answers filed under § 2200.34, statements of reasons and contestants' responses filed under § 2200.38, and petitions for modification of abatement and objecting parties' responses filed under § 2200.37. A motion is not a *pleading* within the meaning of these rules.

[51 FR 32015, Sept. 8, 1986, as amended at 74 FR 63986, Dec. 7, 2009]

§ 2200.2 Scope of rules; applicability of Federal Rules of Civil Procedure; construction.

(a) *Scope*. These rules shall govern all proceedings before the Commission and its Judges.

(b) *Applicability of Federal Rules of Civil Procedure*. In the absence of a specific provision, procedure shall be in accordance with the Federal Rules of Civil Procedure.

(c) *Construction*. These rules shall be construed to secure an expeditious, just and inexpensive determination of every case.

§ 2200.3 Use of gender and number.

(a) *Number*. Words importing the singular number may extend and be applied to the plural and vice versa.

(b) *Gender*. Words importing the masculine gender may be applied to the feminine gender.

§ 2200.4 Computation of time.

(a) *Computation*. In computing any period of time prescribed or allowed in these rules, the day from which the designated period begins to run shall not be included. The last day of the period so computed shall be included unless it is a Saturday, Sunday or Federal holiday, in which event the period runs until the end of the next day which is not a Saturday, Sunday, or Federal holiday. When the period of time prescribed or allowed is less than 11 days, the period shall commence on the first day which is not a Saturday,

Sunday, or Federal holiday, and intermediate Saturdays, Sundays, and Federal holidays shall likewise be excluded from the computation.

(b) *Service by mail.* Where service of a document, including documents issued by the Commission or Judge, is made by mail pursuant to § 2200.7, a separate period of 3 days shall be allowed, in addition to the prescribed period, for the filing of a response. This additional 3-day period shall commence on the calendar day following the day on which service has been made and shall include all calendar days; that is, paragraph (a) of this section shall not apply to the extent it requires the exclusion of Saturdays, Sundays, or Federal holidays. The prescribed period for the responsive filing shall commence on the first day following the expiration of the 3-day period, except when the prescribed period is less than 11 days. Where the period is less than 11 days, it shall commence on the first day following the expiration of the 3-day period that is not a Saturday, Sunday, or Federal holiday.

(c) *Exclusion.* Paragraph (b) of this section does not apply to petitions for discretionary review. The period of time for filing a petition for discretionary review is governed by § 2200.91(b).

[57 FR 41683, Sept. 11, 1992]

§ 2200.5 Extension of time.

The Commission or Judge on their own initiative or, upon motion of a party, for good cause shown, may enlarge or shorten any time prescribed by these rules or prescribed by an order. All such motions shall be in writing but, in exigent circumstances in a case pending before a Judge, an oral request may be made and thereafter shall be followed by a written motion filed with the Judge within 3 working days. A request for an extension of time should be received in advance of the date on which the pleading or document is due to be filed. However, in exigent circumstances, an extension of time may be granted even though the request was filed after the designated time for filing has expired. In such circumstances, the party requesting the extension must show, in writing, the reasons for the party's failure to make the request before the time prescribed for the filing had expired. The motion may be acted upon before the time for response has expired.

[70 FR 22787, May 3, 2005]

§ 2200.6 Record address.

Every pleading or document filed by any party or intervenor shall contain the name, current address and telephone number of his representative or, if he has no representative, his own name, current address and telephone number. Any change in such information shall be communicated promptly in writing to the Judge, or the Executive Secretary if no Judge has been assigned, and to all other parties and intervenors. A party or intervenor who fails to furnish such information shall be deemed to have waived his right to notice and service under these rules.

[51 FR 32015, Sept. 8, 1986; 52 FR 13831, Apr. 27, 1987]

§ 2200.7 Service and notice.

(a) *When service is required.* At the time of filing pleadings or other documents, a copy thereof shall be served by the filing party or intervenor on every other party or intervenor. Every paper relating to discovery required to be served on a party shall be served on all parties and intervenors. Every order required by its terms to be served shall be served upon each of the parties and intervenors.

(b) *Service on represented parties or intervenors.* Service upon a party or intervenor who has appeared through a representative shall be made only upon such representative.

(c) *How accomplished.* Unless otherwise ordered, service may be accomplished by postage pre-paid first class mail at the last known address, by electronic transmission, or by personal delivery. Service is deemed effected at the time of mailing (if by mail), at the time of receipt (if by electronic transmission), or at the time of personal delivery (if by personal delivery). Facsimile transmission of documents and documents sent by an overnight delivery service shall be considered personal delivery. Legibility of documents served by facsimile transmission is the responsibility of the serving party.

Documents may be served by electronic transmission only when all parties consent in writing and the certificate of service of the electronic transmission states such consent and the method of transmission. All parties must be electronically served. Electronic service must be accomplished by following the requirements set forth on the Commission's Web site (*http://www.OSHRC.gov*.).

(d) *Proof of service*. Proof of service shall be accomplished by a written statement of the same which sets forth the date and manner of service. Such statement shall be filed with the pleading or document.

(e) *Proof of posting*. Where service is accomplished by posting, proof of such posting shall be filed not later than the first working day following the posting.

(f) *Service on represented employees*. Service and notice to employees represented by an authorized employee representative shall be deemed accomplished by serving the representative in the manner prescribed in paragraph (c) of this section.

(g) *Service on unrepresented employees*. In the event that there are any affected employees who are not represented by an authorized employee representative, the employer shall, immediately upon receipt of notice of the docketing of the notice of contest or petition for modification of the abatement period, post, where the citation is required to be posted, a copy of the notice of contest and a notice informing such affected employees of their right to party status and of the availability of all pleadings for inspection and copying at reasonable times. A notice in the following form shall be deemed to comply with this paragraph:

(Name of employer)

Your employer has been cited by the Secretary of Labor for violation of the Occupational Safety and Health Act of 1970. The citation has been contested and will be the subject of a hearing before the OCCUPATIONAL SAFETY AND HEALTH REVIEW COMMISSION. Affected employees are entitled to participate in this hearing as parties under terms and conditions established by the OCCUPATIONAL SAFETY AND HEALTH REVIEW COMMISSION in its Rules of Procedure. Notice of intent to participate must be filed no later than 10 days before the hearing. Any notice of intent to participate should be sent to: Occupational Safety and Health Review Commission, Office of the Executive Secretary, One Lafayette Centre, 1120 20th Street, NW., Suite 980, Washington, DC 20036–3457. All pleadings relevant to this matter may be inspected at: (Place reasonably convenient to employees, preferably at or near workplace.)

Where appropriate, the second sentence of the above notice will be deleted and the following sentence will be substituted:

The reasonableness of the period prescribed by the Secretary of Labor for abatement of the violation has been contested and will be the subject of a hearing before the OCCUPATIONAL SAFETY AND HEALTH REVIEW COMMISSION.

(h) *Special service requirements; authorized employee representatives*. The authorized employee representative, if any, shall be served with the notice set forth in paragraph (g) of this section and with a copy of the notice of contest.

(i) *Notice of hearing to unrepresented employees*. Immediately upon receipt, a copy of the notice of the hearing to be held before the Judge shall be served by the employer on affected employees who are not represented by an authorized employee representative by posting a copy of the notice of such hearing at or near the place where the citation is required to be posted.

(j) *Notice of hearing to represented employees*. Immediately upon receipt, a copy of the notice of the hearing to be held before the Judge shall be served by the employer on the authorized employee representative of affected employees in the manner prescribed in paragraph (c) of this section, if the employer has not been informed that the authorized employee representative has entered an appearance as of the date such notice is received by the employer.

(k) *Employee contest; service on other employees*. Where a notice of contest is filed by an affected employee who is not represented by an authorized employee representative and there are other affected employees who are represented by an authorized employee

representative, the unrepresented employee shall, upon receipt of the statement filed in conformance with § 2200.38, serve a copy thereof on such authorized employee representative in the manner prescribed in paragraph (c) of this section and shall file proof of such service.

(l) *Employee contest; Service on employer.* Where a notice of contest is filed by an affected employee or an authorized employee representative, a copy of the notice of contest and response filed in support thereof shall be provided to the employer for posting in the manner prescribed in paragraph (g) of this section.

(m) *Employee contest; service on other authorized employee representatives.* An authorized employee representative who files a notice of contest shall be responsible for serving any other authorized employee representative whose members are affected employees.

(n) *Duration of posting.* Where posting is required by this section, such posting shall be maintained until the commencement of the hearing or until earlier disposition.

[51 FR 32015, Sept. 8, 1986; 52 FR 13831, Apr. 27, 1987, as amended at 57 FR 41684, Sept. 11, 1992; 58 FR 26065, Apr. 30, 1993; 62 FR 35963, July 3, 1997; 70 FR 22787, May 3, 2005; 70 FR 25652, May 13, 2005]

§ 2200.8 Filing.

(a) *What to file.* All papers required to be served on a party or intervenor, except for those papers associated with part of a discovery request under Rules 52 through 56, shall be filed either before service or within a reasonable time thereafter.

(b) *Where to file.* Prior to assignment of a case to a Judge, all papers shall be filed with the Executive Secretary at One Lafayette Centre, 1120 20th Street, NW., Suite 980, Washington, DC 20036–3457. Subsequent to the assignment of the case to a Judge, all papers shall be filed with the Judge at the address given in the notice informing of such assignment. Subsequent to the docketing of the Judge's report, all papers shall be filed with the Executive Secretary, except as provided in § 2200.90(b)(3).

(c) *How to file.* Unless otherwise ordered, filings may be accomplished by postage-prepaid first class mail, personal delivery, or electronic transmission or facsimile transmission.

(d) *Number of copies.* Unless otherwise ordered or stated in this part, only the original of a document shall be filed.

(e) *Filing date.* (1) Except for the documents listed in paragraph (e)(2) of this section, filing is effective upon mailing, if by mail, upon receipt by the Commission, if filing is by personal delivery, overnight delivery service, facsimile transmission or electronic transmission.

(2) Filing is effective upon receipt for petitions for interlocutory review (§ 2200.73), petitions for discretionary review (§ 2200.91), and EAJA applications (§ 2204.301).

(3) Counsel and the parties shall have sole responsibility for ensuring that the document is timely received by the Commission.

(f) *Facsimile transmissions.* (1) Any document may be filed with the Commission or its Judges by facsimile transmission. Filing shall be deemed completed at the time that the facsimile transmission is received by the Commission or the Judge. The filed facsimile shall have the same force and effect as an original.

(2) All facsimile transmissions shall include a facsimile of the appropriate certificate of service.

(3) It is the responsibility of parties desiring to file documents by the use of facsimile transmission equipment to utilize equipment that is compatible with facsimile transmission equipment operated by the Commission. Legibility of the transmitted documents is the responsibility of the serving party.

(g) *Electronic filing.* (1) Where all parties consent to electronic service and electronic filing, a document may be filed by electronic transmission with the Commission and its Judges. The certificate of service accompanying the document must state that the other parties consent to filing by electronic transmission. The electronic transmission shall be in the manner specified by the Commission's Web site (*http://www.OSHRC.gov*).

(2) A document filed in conformance with these rules constitutes a written document for the purpose of applying these rules, and a copy printed by the

Commission and placed in the case file shall have the same force and effect as the original.

(3) A certificate of service shall accompany each document electronically filed. The certificate shall set forth the dates and manner of filing and service. It is the responsibility of the transmitting party to retain records showing the date of transmission, including receipts.

(4) A party that files a document by an electronic transmission shall utilize equipment and software that is compatible with equipment operated by the Commission and shall be responsible for the legibility of the document.

(5) Information that is sensitive but not privileged shall be filed as follows:

(i) If Social Security numbers must be included in a document, only the last four digits of that number shall be used;

(ii) If names of minor children must be mentioned, only the initials of that child shall be used;

(iii) If dates of birth must be included, only the year shall be used;

(iv) If financial account numbers must be filed, only the last four digits of these numbers shall be used;

(v) If a personal identifying number, such as a driver's license number must be filed, only the last four digits shall be used. Parties shall exercise caution when filing medical records, medical treatment records, medical diagnosis records, employment history, and individual financial information, and shall redact or exclude certain materials unnecessary to a disposition of the case.

(6) A transmittal letter shall not be filed electronically or by other means when a document is transmitted noting:

(i) The transmittal of a document;

(ii) The inclusion of an attachment;

(iii) A request for a return receipt; or

(iv) A request for additional information concerning the filing.

(7) The signature line of any document shall include the notation ''/s/'' followed by the typewritten name or graphical duplicate of the handwritten signature of the party representative filing the document. Such representation of the signature shall be deemed to be the original signature of the representative for all purposes unless the party representative shows that such representation of the signature was unauthorized.

(8) Privileged information shall not be filed electronically. Privileged information or information that is asserted by any party to be privileged shall not be filed electronically.

[70 FR 22787, May 3, 2005; 70 FR 25652, May 13, 2005; 74 FR 63986, Dec. 7, 2009]

§ 2200.9 Consolidation.

Cases may be consolidated on the motion of any party, on the Judge's own motion, or on the Commission's own motion, where there exist common parties, common questions of law or fact or in such other circumstances as justice or the administration of the Act require.

[51 FR 32015, Sept. 8, 1986; 52 FR 13831, Apr. 27, 1987; 52 FR 19631, May 26, 1987]

§ 2200.10 Severance.

Upon its own motion, or upon motion of any party or intervenor, where a showing of good cause has been made by the party or intervenor, the Commission or the Judge may order any proceeding severed with respect to some or all claims or parties.

[57 FR 41684, Sept. 11, 1992]

§ 2200.11 [Reserved]

§ 2200.12 References to cases.

(a) *Citing decisions by Commission and Judges*—(1) *Generally*. Parties citing decisions by the Commission should include in the citation the name of the employer, a citation to either the Bureau of National Affairs' Occupational Safety and Health Cases (''BNA OSHC'') or Commerce Clearing House's Occupational Safety and Health Decisions (''CCH OSHD''), the OSHRC docket number and the year of the decision. For example, *Clement Food Co.*, 11 BNA OSHC 2120 (No. 80–607, 1984).

(2) *Parenthetical statements*. When citing the decision of a Judge, the digest of an opinion, or the opinion of a single Commissioner, a parenthetical statement to that effect should be included. For example, *Rust Engineering Co.*, 1984 CCH OSHD ¶27,023 (No. 79–2090, 1984)

(view of Chairman _____), *vacating direction for review of* 1980 CCH OSHD ¶24,269 (1980) (ALJ) (digest).

(3) *Additional reference to OSAHRC Reports optional.* A parallel reference to the Commission's official reporter, OSAHRC Reports, which prints the full text of all Commission and Judges' decisions in microfiche form, may also be included. For example, *Texaco, Inc.*, 80 OSAHRC 74/B1, 8 BNA OSHC 1758 (No. 77–3040, 1980). *See generally* 29 CFR 2201.4(c) (on OSAHRC Reports).

(b) *References to court decisions*—(1) *Parallel references to BNA and CCH reporters.* When citing a court decision, a parallel reference to either the Bureau of National Affairs' Occupational Safety and Health Cases (''BNA OSHC'') or Commerce Clearing House's Occupational Safety and Health Decisions (''CCH OSHD'') is desirable. For example, *Simplex Time Recorder Co.* v. *Secretary of Labor*, 766 F.2d 575, 12 BNA OSHC 1401 (D.C. Cir. 1985); *Deering Milliken, Inc.* v. *OSHRC*, 630 F.2d 1094, 1980 CCH OSHD ¶24,991 (5th Cir. 1980).

(2) *Name of employer to be indicated.* When a court decision is cited in which the first-listed party on each side is either the Secretary of Labor (or the name of a particular Secretary of Labor), the Commission, or a labor union, the citation should include in parenthesis the name of the employer in the Commission proceeding. For example, *Donovan* v. *Allied Industrial Workers (Archer Daniels Midland Co.)*, 760 F.2d 783, 12 BNA OSHC 1310 (7th Cir. 1985); *Donovan* v. *OSHRC (Mobil Oil Corp.)*, 713 F.2d 918, 1983 CCH OSHD ¶26,627 (2d Cir. 1983).

[51 FR 32015, Sept. 8, 1986; 52 FR 13831, Apr. 27, 1987]

Subpart B—Parties and Representatives

§ 2200.20 Party status.

(a) *Affected employees.* Affected employees and authorized employee representatives may elect party status concerning any matter in which the Act confers a right to participate. The election shall be accomplished by filing a written notice of election at least 10 days before the hearing. A notice of election filed less than 10 days prior to the hearing is ineffective unless good cause is shown for not timely filing the notice. A notice of election shall be served on all other parties in accordance with § 2200.7.

(b) *Employee contest.* Where a notice of contest is filed by an employee or by an authorized employee representative with respect to the reasonableness of the period for abatement of a violation, the employer charged with the responsibility of abating the violation may elect party status by a notice filed at least 10 days before the hearing. A notice filed less than 10 days prior to the hearing is ineffective unless good cause is shown for not timely filing the notice.

[51 FR 32015, Sept. 8, 1986, as amended at 57 FR 41684, Sept. 11, 1992; 74 FR 63986, Dec. 7, 2009]

§ 2200.21 Intervention; appearance by non-parties.

(a) *When allowed.* A petition for leave to intervene may be filed at any time prior to 10 days before commencement of the hearing. A petition filed less than 10 days prior to the commencement of the hearing will be denied unless good cause is shown for not timely filing the petition. A petition shall be served on all parties in accordance with § 2200.7.

(b) *Requirements of petition.* The petition shall set forth the interest of the petitioner in the proceeding and show that the participation of the petitioner will assist in the determination of the issues in question, and that the intervention will not unduly delay the proceeding.

(c) *Granting of petition.* The Commission or Judge may grant a petition for intervention to such an extent and upon such terms as the Commission or the Judge shall determine.

[51 FR 32015, Sept. 8, 1986, as amended at 74 FR 63986, Dec. 7, 2009]

§ 2200.22 Representation of parties and intervenors.

(a) *Representation.* Any party or intervenor may appear in person, through an attorney, or through another representative who is not an attorney. A representative must file an appearance in accordance with § 2200.23. In the absence of an appearance by a

representative, a party or intervenor will be deemed to appear for himself. A corporation or unincorporated association may be represented by an authorized officer or agent.

(b) *Affected employees in collective bargaining unit.* Where an authorized employee representative (see § 2200.1(g)) elects to participate as a party, affected employees who are members of the collective bargaining unit may not separately elect party status. If the authorized employee representative does not elect party status, affected employees who are members of the collective bargaining unit may elect party status in the same manner as affected employees who are not members of the collective bargaining unit. See paragraph (c) of this section.

(c) *Affected employees not in collective bargaining unit.* Affected employees who are not members of a collective bargaining unit may elect party status under § 2200.20(a). If more than one employee so elects, the Judge shall provide for them to be treated as one party.

(d) *Control of proceeding.* A representative of a party or intervenor shall be deemed to control all matters respecting the interest of such party or intervenor in the proceeding.

[51 FR 32015, Sept. 8, 1986; 52 FR 13831, Apr. 27, 1987]

§ 2200.23 Appearances and withdrawals.

(a) *Entry of appearance*—(1) *General.* A representative of a party or intervenor shall enter an appearance by signing the first document filed on behalf of the party or intervenor in accordance with paragraph (a)(2) of this section, or thereafter by filing an entry of appearance in accordance with paragraph (a)(3) of this section.

(2) *Appearance in first document or pleading.* If the first document filed on behalf of a party or intervenor is signed by a representative, he shall be recognized as representing that party. No separate entry of appearance by him is necessary, provided the document contains the information required by § 2200.6.

(3) *Subsequent appearance.* Where a representative has not previously appeared on behalf of a party or intervenor, he shall file an entry of appearance with the Executive Secretary, or Judge if the case has been assigned. The entry of appearance shall be signed by the representative and contain the information required by § 2200.6.

(b) *Withdrawal of counsel.* Any counsel or representative of record desiring to withdraw his appearance, or any party desiring to withdraw the appearance of counsel or representative of record for him, must file a motion with the Commission or Judge requesting leave therefor, and showing that prior notice of the motion has been given by him to his client or counsel or representative, as the case may be. The motion of counsel to withdraw may, in the discretion of the Commission or Judge, be denied where it is necessary to avoid undue delay or prejudice to the rights of a party or intervenor.

§ 2200.24 Brief of an amicus curiae.

The brief of an amicus curiae may be filed only by leave of the Judge or Commission. The brief may be conditionally filed with the motion for leave. A motion for leave shall identify the interest of the applicant and shall state the reasons why a brief of an amicus curiae is desirable. Any amicus curiae shall file its brief within the time allowed the party whose position the amicus will support unless the Judge or Commission, for good cause shown, grants leave for later filing. In that event, the Judge or Commission shall specify within what period an opposing party may answer.

[57 FR 41684, Sept. 11, 1992]

Subpart C—Pleadings and Motions

§ 2200.30 General rules.

(a) *Format.* Pleadings and other documents (other than exhibits) shall be typewritten, double spaced, on letter size opaque paper (approximately 8½ inches by 11 inches). All margins shall be approximately 1½ inches. Pleadings and other documents shall be fastened at the upper left corner.

(b) *Clarity.* Each allegation or response of a pleading or motion shall be simple, concise and direct.

(c) *Separation of claims*. Each allegation or response shall be made in separate numbered paragraphs. Each paragraph shall be limited as far as practicable to a statement of a single set of circumstances.

(d) *Adoption by reference*. Statements in a pleading may be adopted by reference in a different part of the same pleading or in another pleading or in any motion. A copy of any written instrument which is an exhibit to a pleading is a part thereof for all purposes.

(e) *Alternative pleading*. A party may set forth two or more statements of a claim or defense alternatively or hypothetically. When two or more statements are made in the alternative and one of them would be sufficient if made independently, the pleading is not made insufficient by the insufficiency of one or more of the alternative statements. A party may state as many separate claims or defenses as he has regardless of their consistency or the grounds on which based. All statements shall be made subject to the signature requirements of § 2200.32.

(f) *Content of motions and miscellaneous pleadings*. A motion shall contain a caption complying with § 2200.31, a signature complying with § 2200.32, and a clear and plain statement of the relief that is sought together with the grounds therefor. These requirements also apply to any pleading not governed by more specific requirements in this subpart.

(g) *Burden of persuasion*. The rules of pleading established by this subpart are not determinative in deciding which party bears the burden of persuasion on an issue. By pleading a matter affirmatively, a party does not waive its right to argue that the burden of persuasion on the matter is on another party.

(h) *Enforcement of pleading rules*. The Commission or the Judge may refuse for filing any pleading or motion that does not comply with the requirements of this subpart.

[51 FR 32015, Sept. 8, 1986, as amended at 57 FR 41685, Sept. 11, 1992]

§ 2200.31 Caption; titles of cases.

(a) *Notice of contest cases*. Cases initiated by a notice of contest shall be titled:

Secretary of Labor,

Complainant,

v.

(Name of Contestant),

Respondent.

(b) *Petitions for modification of abatement period*. Cases initiated by a petition for modification of the abatement period shall be titled:

(Name of employer),

Petitioner,

v.

Secretary of Labor,

Respondent.

(c) *Location of title*. The titles listed in paragraphs (a) and (b) of this section shall appear at the left upper portion of the initial page of any pleading or document (other than exhibits) filed.

(d) *Docket number*. The initial page of any pleading or document (other than exhibits) shall show, at the upper right of the page, opposite the title, the docket number, if known, assigned by the Commission.

§ 2200.32 Signing of pleadings and motions.

Pleadings and motions shall be signed by the filing party or by the party's representative. The signature of a representative constitutes a representation by him that he is authorized to represent the party or parties on whose behalf the pleading is filed. The signature of a representative or party also constitutes a certificate by him that he has read the pleading, motion, or other paper, that to the best of his knowledge, information, and belief, formed after reasonable inquiry, it is well grounded in fact and is warranted by existing law or a good faith argument for the extension, modification, or reversal of existing law, and that it is not interposed for any improper purpose, such as to harass or to cause unnecessary delay or needless increase in

the cost of litigation. If a pleading, motion or other paper is signed in violation of this rule, such signing party or its representative shall be subject to the sanctions set forth in § 2200.101 or § 2200.104. A signature by a party representative constitutes a representation by him that he understands that the rules and orders of the Commission and its Judges apply equally to attorney and non-attorney representatives.

[70 FR 22788, May 3, 2005; 70 FR 25652, May 13, 2005]

§ 2200.33 Notices of contest.

Within 15 working days after receipt of—

(a) Notification that the employer intends to contest a citation or proposed penalty under section 10(a) of the Act, 29 U.S.C. 659(a); or

(b) Notification that the employer wishes to contest a notice of a failure to abate or a proposed penalty under section 10(b) of the Act, 29 U.S.C. 659(b); or

(c) A notice of contest filed by an employee or representative of employees under section 10(c) of the Act, 29 U.S.C. 659(c),

the Secretary shall notify the Commission of the receipt in writing and shall promptly furnish to the Executive Secretary of the Commission the original of any documents or records filed by the contesting party and copies of all other documents or records relevant to the contest.

[51 FR 32015, Sept. 8, 1986; 52 FR 13831, Apr. 27, 1987]

§ 2200.34 Employer contests.

(a) *Complaint*. (1) The Secretary shall file a complaint with the Commission no later than 20 days after receipt of the notice of contest.

(2) The complaint shall set forth all alleged violations and proposed penalties which are contested, stating with particularity:

(i) The basis for jurisdiction;

(ii) The time, location, place, and circumstances of each such alleged violation; and

(iii) The considerations upon which the period for abatement and the proposed penalty of each such alleged violation are based.

(3) Where the Secretary seeks in his complaint to amend his citation or proposed penalty, he shall set forth the reasons for amendment and shall state with particularity the change sought.

(b) *Answer*. (1) Within 20 days after service of the complaint, the party against whom the complaint was issued shall file an answer with the Commission.

(2) The answer shall contain a short and plain statement denying those allegations in the complaint which the party intends to contest. Any allegation not denied shall be deemed admitted.

(3) The answer shall include all affirmative defenses being asserted. Such affirmative defenses include, but are not limited to, ''infeasibility,'' ''unpreventable employee misconduct,'' and ''greater hazard.''

(4) The failure to raise an affirmative defense in the answer may result in the party being prohibited from raising the defense at a later stage in the proceeding, unless the Judge finds that the party has asserted the defense as soon as practicable.

[57 FR 41685, Sept. 11, 1992]

§ 2200.35 Disclosure of corporate parents, subsidiaries, and affiliates.

(a) *General*. All answers, petitions for modification of abatement period, or other initial pleadings filed under these rules by a corporation shall be accompanied by a separate declaration listing all parents, subsidiaries, and affiliates of that corporation or stating that the corporation has no parents, subsidiaries, or affiliates, whichever is applicable.

(b) *Failure to disclose*. The Commission or Judge in its discretion may refuse to accept for filing an answer or other initial pleading that lacks the disclosure declaration required by this paragraph. A party that fails to file an adequate declaration may be held in default after being given an opportunity to show cause why it should not be held in default.

(c) *Continuing duty to disclose*. A party subject to the disclosure requirement of this paragraph has a continuing duty to notify the Commission or the Judge of any change in the information on the disclosure declaration until the

Commission issues a final order disposing of the proceeding.

(d) *Show cause orders.* All show cause orders issued by the Commission or Judge under paragraph (b) of this section shall be served upon the affected party by certified mail, return receipt requested.

[57 FR 41685, Sept. 11, 1992]

§ 2200.36 [Reserved]

§ 2200.37 Petitions for modification of the abatement period.

(a) *Grounds for modifying abatement date.* An employer may file a petition for modification of abatement date when such employer has made a good faith effort to comply with the abatement requirements of a citation, but such abatement has not been completed because of factors beyond the employer's reasonable control.

(b) *Contents of petition.* A petition for modification of abatement date shall be in writing and shall include the following information:

(1) All steps taken by the employer, and the dates of such action, in an effort to achieve compliance during the prescribed abatement period.

(2) The specific additional abatement time necessary in order to achieve compliance.

(3) The reasons such additional time is necessary, including the unavailability of professional or technical personnel or of materials and equipment, or because necessary construction or alteration of facilities cannot be completed by the original abatement date.

(4) All available interim steps being taken to safeguard the employees against the cited hazard during the abatement period.

(c) *When and where filed; Posting requirement; Responses to petition.* A petition for modification of abatement date shall be filed with the Area Director of the United States Department of Labor who issued the citation no later than the close of the next working day following the date on which abatement was originally required. A later-filed petition shall be accompanied by the employer's statement of exceptional circumstances explaining the delay.

(1) A copy of such petition shall be posted in a conspicuous place where all affected employees will have notice thereof or near each location where the violation occurred. The petition shall remain posted for a period of 10 days.

(2) Affected employees or their representatives may file an objection in writing to such petition with the aforesaid Area Director. Failure to file such objection within 10 working days of the date of posting of such petition shall constitute a waiver of any further right to object to said petition.

(3) The Secretary or his duly authorized agent shall have the authority to approve any uncontested petition for modification of abatement date filed pursuant to paragraphs (b) and (c) of this section. Such uncontested petitions shall become final orders pursuant to sections 10 (a) and (c) of the Act, 29 U.S.C. 659(a) and (c).

(4) The Secretary or his authorized representative shall not exercise his approval power until the expiration of 15 working days from the date the petition was posted pursuant to paragraphs (c)(1) and (2) of this section by the employer.

(d) *Contested petitions.* Where any petition is objected to by the Secretary or affected employees, such petition shall be processed as follows:

(1) The Secretary shall forward the petition, citation and any objections to the Commission within 10 working days after the expiration of the 15 working day period set out in paragraph (c)(4) of this section.

(2) The Commission shall docket and process such petitions as expedited proceedings as provided for in § 2200.103 of this part.

(3) An employer petitioning for a modification of the abatement period shall have the burden of proving in accordance with the requirements of section 10(c) of the Act, 29 U.S.C. 659(c), that such employer has made a good faith effort to comply with the abatement requirements of the citation and that abatement has not been completed because of factors beyond the employer's control.

(4) Where the petitioner is a corporation, it shall file a separate declaration listing all parents, subsidiaries, and affiliates of that corporation or stating that the corporation has no parents, subsidiaries, or affiliates, whichever is

applicable, within 10 working days after the receipt of notice of the docketing by the Commission of the petition for modification of the abatement date. The requirements set forth in § 2200.35(b) through (d) shall apply.

(5) Each objecting party shall file a response setting forth the reasons for opposing the abatement date requested in the petition, within 10 working days after the receipt of notice of the docketing by the Commission of the petition for modification of the abatement date.

[51 FR 32015, Sept. 8, 1986; 52 FR 13832, Apr. 27, 1987, as amended at 55 FR 22782, June 4, 1990; 74 FR 63986, Dec. 7, 2009]

§ 2200.38 Employee contests.

(a) *Secretary's statement of reasons.* Where an affected employee or authorized employee representative files a notice of contest with respect to the abatement period, the Secretary shall, within 10 days from his receipt of the notice of contest, file a clear and concise statement of the reasons the abatement period prescribed by him is not unreasonable.

(b) *Response to Secretary's statement.* Not later than 10 days after receipt of the statement referred to in paragraph (a) of this section, the contestant shall file a response.

(c) *Expedited proceedings.* All contests under this section shall be handled as expedited proceedings as provided for in § 2200.103 of this part.

§ 2200.39 Statement of position.

At any time prior to the commencement of the hearing before the Judge, any person entitled to appear as a party, or any person who has been granted leave to intervene, may file a statement of position with respect to any or all issues to be heard. The Judge may order the filing of a statement of position.

§ 2200.40 Motions and requests.

(a) *How to make.* A request for an order shall be made by motion. Motions shall be in writing or, unless the Judge directs otherwise, may be made orally during a hearing on the record and shall be included in the transcript. In exigent circumstances in cases pending before Judges, a motion may be made telephonically if it is reduced to writing and filed as soon as possible but no later than 3 working days following the time the motion was made. A motion shall state with particularity the grounds on which it is based and shall set forth the relief or order sought. A motion shall not be included in another document, such as a brief or a petition for discretionary review, but shall be made in a separate document. Prior to filing a motion, the moving party shall confer or make reasonable efforts to confer with the other parties and shall state in the motion if any other party opposes or does not oppose the motion.

(b) *When to make.* A motion filed in lieu of an answer pursuant to § 2200.34(b) shall be filed no later than 20 days after the service of the complaint. Any other motion shall be made as soon as the grounds therefor are known.

(c) *Responses.* Any party or intervenor upon whom a motion is served shall have 10 days from service of the motion to file a response. A procedural motion may be ruled upon prior to the expiration of the time for response; a party adversely affected by the ruling may within 5 days of service of the ruling seek reconsideration.

(d) *Postponement not automatic upon filing of motion.* The filing of a motion, including a motion for a postponement, does not automatically postpone a hearing. See § 2200.62 with respect to motions for postponement.

[51 FR 32015, Sept. 8, 1986; 52 FR 13832, Apr. 27, 1987, as amended at 57 FR 41685, Sept. 11, 1992; 62 FR 35963, July 3, 1997; 74 FR 63986, Dec. 7, 2009]

§ 2200.41 [Reserved]

Subpart D—Prehearing Procedures and Discovery

§ 2200.50 [Reserved]

§ 2200.51 Prehearing conferences and orders.

(a) *Scheduling conference.* (1) The Judge may, upon his or her discretion, consult with all attorneys and any unrepresented parties, by a scheduling conference, telephone, mail, or other suitable means, and within 30 days

after the filing of the answer, enter a scheduling order that limits the time:

(i) To join other parties and to amend the pleadings;

(ii) To file and hear motions; and

(iii) To complete discovery.

(2) The scheduling order also may include:

(i) The date or dates for conferences before hearing, a final prehearing conference, and hearing; and

(ii) Any other matters appropriate to the circumstances of the case.

(b) *Prehearing conference.* In addition to the prehearing procedures set forth in Federal Rule of Civil Procedure 16, the Judge may upon his own initiative or on the motion of a party direct the parties to confer among themselves to consider settlement, stipulation of facts, or any other matter that may expedite the hearing.

[57 FR 41685, Sept. 11, 1992, as amended at 70 FR 22788, May 3, 2005; 74 FR 63986, Dec. 7, 2009]

§ 2200.52 General provisions governing discovery.

(a) *General*—(1) *Methods and limitations.* In conformity with these rules, any party may, without leave of the Commission or Judge, obtain discovery by one or more of the following methods:

(i) Production of documents or things or permission to enter upon land or other property for inspection and other purposes (§ 2200.53);

(ii) Requests for admission to the extent provided in § 2200.54; and

(iii) Interrogatories to the extent provided in § 2200.55. Discovery is not available under these rules through depositions except to the extent provided in § 2200.56. In the absence of a specific provision, procedure shall be in accordance with the Federal Rules of Civil Procedure, except that the provisions of Federal Rule of Civil Procedure 26(a) do not apply to Commission proceedings.

(2) *Time for discovery.* A party may initiate all forms of discovery in conformity with these Rules at any time after the filing of the first responsive pleading or motion that delays the filing of an answer, such as a motion to dismiss. Discovery shall be initiated early enough to permit completion of discovery no later than 7 days prior to the date set for hearing, unless the Judge orders otherwise.

(3) *Service of discovery papers.* Every paper relating to discovery required to be served on a party shall be served on all parties.

(b) *Scope of discovery.* The information or response sought through discovery may concern any matter that is not privileged and that is relevant to the subject matter involved in the pending case. It is not ground for objection that the information or response sought will be inadmissible at the hearing, if the information or response appears reasonably calculated to lead to discovery of admissible evidence, regardless of which party has the burden of proof.

(c) *Limitations.* The frequency or extent of the discovery methods provided by these rules may be limited by the Commission or Judge if it is determined that:

(1) The discovery sought is unreasonably cumulative or duplicative, or is obtainable from some other source that is more convenient, less burdensome, or less expensive;

(2) The party seeking discovery has had ample opportunity to obtain the information sought by discovery in the action; or

(3) The discovery is unduly burdensome or expensive, taking into account the needs of the case, limitations on the parties' resources, and the importance of the issues in litigation.

(d) *Privilege*—(1) *Claims of privilege.* The initial claim of privilege shall specify the privilege claimed and the general nature of the material for which the privilege is claimed. In response to an order from the Judge or the Commission, or in response to a motion to compel, the claim shall: Identify the information that would be disclosed; set forth the privilege that is claimed; and allege the facts showing that the information is privileged. The claim shall be supported by affidavits, depositions, or testimony and shall specify the relief sought. The claim may be accompanied by a motion for a protective order or by a motion that the allegedly privileged information be received and the claim ruled upon in camera, that is, with the record and

hearing room closed to the public, or *ex parte*, that is, without the participation of parties and their representatives. The Judge may enter an order and impose terms and conditions on his or her examination of the claim as justice may require, including an order designed to ensure that the allegedly privileged information not be disclosed until after the examination is completed.

(2) *Upholding or rejecting claims of privilege.* If the Judge upholds the claim of privilege, the Judge may order and impose terms and conditions as justice may require, including a protective order. If the Judge overrules the claim, the person claiming the privilege may obtain as of right an order sealing from the public those portions of the record containing the allegedly privileged information pending interlocutory or final review of the ruling, or final disposition of the case, by the Commission. Interlocutory review of such an order shall be given priority consideration by the Commission.

(e) *Protective orders.* In connection with any discovery procedures and where a showing of good cause has been made, the Commission or Judge may make any order including, but not limited to, one or more of the following:

(1) That the discovery not be had;

(2) That the discovery may be had only on specified terms and conditions, including a designation of the time or place;

(3) That the discovery may be had only by a method of discovery other than that selected by the party seeking discovery;

(4) That certain matters not be inquired into, or that the scope of the discovery be limited to certain matters;

(5) That discovery be conducted with no one present except persons designated by the Commission or Judge;

(6) That a deposition after being sealed be opened only by order of the Commission or Judge;

(7) That a trade secret or other confidential research, development, or commercial information not be disclosed or be disclosed only in a designated way;

(8) That the parties simultaneously file specified documents or information enclosed in sealed envelopes to be opened as directed by the Commission or Judge.

(f) *Failure to cooperate; Sanctions.* A party may apply for an order compelling discovery when another party refuses or obstructs discovery. For purposes of this paragraph, an evasive or incomplete answer is to be treated as a failure to answer. If a Judge enters an order compelling discovery and there is a failure to comply with that order, the Judge may make such orders with regard to the failure as are just. The orders may issue upon the initiative of a Judge, after affording an opportunity to show cause why the order should not be entered, or upon the motion of a party. The orders may include any sanction stated in Federal Rule of Civil Procedure 37, including the following:

(1) An order that designated facts shall be taken to be established for purposes of the case in accordance with the claim of the party obtaining that order;

(2) An order refusing to permit the disobedient party to support or to oppose designated claims or defenses, or prohibiting it from introducing designated matters in evidence;

(3) An order striking out pleadings or parts thereof, or staying further proceedings until the order is obeyed; and

(4) An order dismissing the action or proceeding or any part thereof, or rendering a judgment by default against the disobedient party.

(g) *Unreasonable delays.* None of the discovery procedures set forth in these rules shall be used in a manner or at a time which shall delay or impede the progress of the case toward hearing status or the hearing of the case on the date for which it is scheduled, unless, in the interests of justice, the Judge shall order otherwise. Unreasonable delays in utilizing discovery procedures may result in termination of the party's right to conduct discovery.

(h) *Show cause orders.* All show cause orders issued by the Commission or Judge under paragraph (f) of this section shall be served upon the affected party by certified mail, return receipt requested.

(i) *Supplementation of responses.* A party who has responded to a request for discovery with a response that was

complete when made is under no duty to supplement the response to include information thereafter acquired, except as follows:

(1) A party is under a duty seasonably to supplement the response with respect to any question directly addressed to:

(i) The identity and location of persons having knowledge of discoverable matters; and

(ii) The identity of each person expected to be called as an expert witness at the hearing, the subject matter on which the person is expected to testify, and the substance of the person's testimony.

(2) A party is under a duty seasonably to amend a prior response if the party obtains information upon the basis of which:

(i) The party knows that the response was incorrect when made; or

(ii) The party knows that the response though correct when made is no longer true and the circumstances are such that a failure to amend the response is in substance a knowing concealment.

(3) A duty to supplement responses may be imposed by order of the court, agreement of the parties, or at any time prior to the hearing through new requests for supplementation of prior responses.

(j) *Filing of discovery*. Requests for production or inspection under § 2200.53, requests for admission under § 2200.54 and responses thereto, interrogatories under § 2200.55 and the answers thereto, and depositions under § 2200.56 shall be served upon other counsel or parties, but shall not be filed with the Commission or the Judge. The party responsible for service of the discovery material shall retain the original and become the custodian.

(k) *Relief from discovery requests*. If relief is sought under §§ 2200.101 or 2200.52(e), (f), or (g) concerning any interrogatories, requests for production or inspection, requests for admissions, answers to interrogatories, or responses to requests for admissions, copies of the portions of the interrogatories, requests, answers, or responses in dispute shall be filed with the Judge or Commission contemporaneously with any motion filed under §§ 2200.101 or 2200.52(e), (f), or (g).

(l) *Use at hearing*. If interrogatories, requests, answers, responses, or depositions are to be used at the hearing or are necessary to a prehearing motion which might result in a final order on any claim, the portions to be used shall be filed with the Judge or the Commission at the outset of the hearing or at the filing of the motion insofar as their use can be reasonably anticipated.

(m) *Use on review or appeal*. When documentation of discovery not previously in the record is needed for review or appeal purposes, upon an application and order of the Judge or Commission the necessary discovery papers shall be filed with the Executive Secretary of the Commission.

[51 FR 32015, Sept. 8, 1986; 52 FR 13832, Apr. 27, 1987, as amended at 55 FR 22782, June 4, 1990; 57 FR 41686, Sept. 11, 1992; 70 FR 22788, May 3, 2005; 70 FR 25652, May 13, 2005; 74 FR 63987, Dec. 7, 2009]

§ 2200.53 Production of documents and things.

(a) *Scope*. At any time after the filing of the first responsive pleading or motion that delays the filing of an answer, such as a motion to dismiss, any party may serve on any other party a request to:

(1) Produce and permit the party making the request, or a person acting on his or her behalf, to inspect and copy any designated documents, or to inspect and copy, test, or sample any tangible things which are in the possession, custody, or control of the party upon whom the request is served;

(2) Permit entry upon designated land or other property in the possession or control of the party upon whom the request is served for the purpose of inspection and measuring, surveying, photographing, testing or sampling the property or any designated object or operation thereon.

(b) *Procedure*. The request shall set forth the items to be inspected, either by individual item or by category and describe each item and category with reasonable particularity. It shall specify a reasonable time, place and manner of making the inspection and performing related acts. The party upon whom the request is served shall serve

a written response within 30 days after service of the request, unless the requesting party allows a longer time. The Commission or Judge may allow a shorter time or a longer time, should the requesting party deny an extension. The response shall state, with respect to each item or category, that inspection and related activities will be permitted as requested, unless the request is objected to in whole or in part, in which event the reasons for objection shall be stated. If objection is made to part of an item or category, that part shall be specified. To obtain a ruling on an objection by the responding party, the requesting party shall file a motion with the Judge and shall annex thereto his request, together with the response and objections, if any.

[51 FR 32015, Sept. 8, 1986, as amended at 57 FR 41686, Sept. 11, 1992]

§ 2200.54 Requests for admissions.

(a) *Scope.* At any time after the filing of the first responsive pleading or motion that delays the filing of an answer, such as a motion to dismiss, any party may serve upon any other party written requests for admissions, for purposes of the pending action only, of the genuineness and authenticity of any document described in or attached to the requests, or of the truth of any specified matter of fact. Each matter of which an admission is requested shall be separately set forth. The number of requested admissions shall not exceed 25, including subparts, without an order of the Commission or Judge. The party seeking to serve more than 25 requested admissions, including subparts, shall have the burden of persuasion to establish that the complexity of the case or the number of citation items necessitates a greater number of requested admissions.

(b) *Response to requests.* Each matter is deemed admitted unless, within 30 days after service of the requests or within such shorter or longer time as the Commission or Judge may allow, the party to whom the requests are directed serves upon the requesting party a written answer specifically admitting or denying the matter involved in whole or in part, or asserting that it cannot be truthfully admitted or denied and setting forth in detail the reasons why this is so, or an objection, stating in detail the reasons therefor. The response shall be made under oath or affirmation and signed by the party or his representative.

(c) *Effect of admission.* Any matter admitted under this section is conclusively established unless the Judge or Commission on motion permits withdrawal or modification of the admission. Withdrawal or modification may be permitted when the presentation of the merits of the case will be subserved thereby, and the party who obtained the admission fails to satisfy the Commission or Judge that the withdrawal or modification will prejudice him in presenting his case or defense on the merits.

[51 FR 32015, Sept. 8, 1986, as amended at 70 FR 22790, May 3, 2005; 70 FR 25652, May 13, 2005]

§ 2200.55 Interrogatories.

(a) *General.* At any time after the filing of the first responsive pleading or motion that delays the filing of an answer, such as a motion to dismiss, any party may serve interrogatories upon any other party. The number of interrogatories shall not exceed 25 questions, including subparts, without an order of the Commission or Judge. The party seeking to serve more than 25 questions, including subparts, shall have the burden of persuasion to establish that the complexity of the case or the number of citation items necessitates a greater number of interrogatories.

(b) *Answers.* All answers shall be made in good faith and as completely as the answering party's information will permit. The answering party is required to make reasonable inquiry and ascertain readily obtainable information. An answering party may not give lack of information or knowledge as an answer or as a reason for failure to answer, unless he states that he has made reasonable inquiry and that information known or readily obtainable by him is insufficient to enable him to answer the substance of the interrogatory.

(c) *Procedure.* Each interrogatory shall be answered separately and fully

under oath or affirmation. If the interrogatory is objected to, the objection shall be stated in lieu of the answer. The answers are to be signed by the person making them and the objections shall be signed by the party or his counsel. The party on whom the interrogatories have been served shall serve a copy of his answers or objections upon the propounding party within 30 days after the service of the interrogatories. The Judge may allow a shorter or longer time. The burden shall be on the party submitting the interrogatories to move for an order with respect to any objection or other failure to answer an interrogatory.

§ 2200.56 Depositions.

(a) *General*. Depositions of parties, intervenors, or witnesses shall be allowed only by agreement of all the parties, or on order of the Commission or Judge following the filing of a motion of a party stating good and just reasons. All depositions shall be before an officer authorized to administer oaths and affirmations at the place of examination. The deposition shall be taken in accordance with the Federal Rules of Civil Procedure, particularly Federal Rule of Civil Procedure 30.

(b) *When to file*. A motion to take depositions may be filed after the filing of the first responsive pleading or motion that delays the filing of an answer, such as a motion to dismiss.

(c) *Notice of taking*. Any depositions allowed by the Commission or Judge may be taken after 10 days written notice to the other party or parties. The 10-day notice requirement may be waived by the parties.

(d) *Expenses*. Expenses for a court reporter and the preparing and serving of depositions shall be borne by the party at whose instance the deposition is taken.

(e) *Use of depositions*. Depositions taken under this rule may be used for discovery, to contradict or impeach the testimony of a deponent as a witness, or for any other purpose permitted by the Federal Rules of Evidence and the Federal Rules of Civil Procedure, particularly Federal Rule of Civil Procedure 32.

(f) *Excerpts from depositions to be offered at hearing*. Except when used for purposes of impeachment, at least 5 working days prior to the hearing, the parties or counsel shall furnish to the Judge and all opposing parties or counsel the excerpts from depositions (by page and line number) which they expect to introduce at the hearing. Four working days thereafter, the adverse party or counsel for the adverse party shall furnish to the Judge and all opposing parties or counsel additional excerpts from the depositions (by page and line number) which they expect to be read pursuant to Federal Rule of Civil Procedure 32(a)(4), as well as any objections (by page and line number) to opposing party's or counsel's depositions. With reasonable notice to the Judge and all parties or counsel, other excerpts may be read.

(g) *Telephone depositions*. (1) Telephone depositions may be conducted pursuant to Federal Rule of Civil Procedure 30(b)(4).

(2) If a party objects to a telephone deposition, he shall make known his objections at least 5 days prior to the taking of the deposition. If the objection is not resolved by the parties or the Judge before the scheduled deposition date, the deposition shall be stayed pending resolution of the dispute.

(h) *Video depositions*. By indicating in its notice of a deposition that it wishes to record the deposition by videotape (and identifying the proposed videotape operator), a party shall be deemed to have moved for such an order under Federal Rule of Civil Procedure 30(b)(3). Unless an objection is filed and served within 10 days after such notice is received, the Judge shall be deemed to have granted the motion pursuant to the following terms and conditions:

(1) *Stenographic recording*. The videotaped deposition shall be simultaneously recorded stenographically by a qualified court reporter. The court reporter shall administer the oath or affirmation to the deponents on camera. The written transcript by the court reporter shall constitute the official record of the deposition for purposes of Federal Rule of Civil Procedure 30(e) (submission to witness).

(2) *Cost*. The noticing party shall bear the expense of both the videotaping and the stenographic recording. Any

party may at its own expense obtain a copy of the videotape and the stenographic transcript.

(3) *Video operator*. The operator(s) of the videotape recording equipment shall be subject to the provisions of Federal Rule of Civil Procedure 28 (c). At the commencement of the deposition the operator(s) shall swear or affirm to record the proceedings fairly and accurately.

(4) *Attendance*. Each witness, attorney, and other person attending the deposition shall be identified on camera at the commencement of the deposition. Thereafter, only the deponent (and demonstrative materials used during the deposition) will be videotaped. Identification on camera of each witness, attorney, and other person attending the deposition may be waived by the attorneys for the parties.

(5) *Standards*. The deposition will be conducted in a manner to replicate, to the extent feasible, the presentation of evidence at a hearing. Unless physically incapacitated, the deponent shall be seated at a table or in a witness box except when reviewing or presenting demonstrative materials for which a change in position is needed. To the extent practicable, the deposition will be conducted in a neutral setting, against a solid background, with only such lighting as is required for accurate video recording. Lighting, camera angle, lens setting, and field of view will be changed only as necessary to record accurately the natural body movements of the deponent or to portray exhibits and materials used during the deposition. Sound levels will be altered only as necessary to record satisfactorily the voices of counsel and the deponent. Eating and smoking by deponents or counsel during the deposition will not be permitted.

(6) *Interruptions*. Videotape recording will be suspended during all ''off the record'' discussions.

(7) *Index*. The videotape operator shall use a counter on the recording equipment and after completion of the deposition shall prepare a log, cross-referenced to counter numbers, that identifies the positions on the tape at which examination by different counsel begins and ends; at which objections are made and examination resumes; at which exhibits are identified; and at which any interruption of continuous tape recording occurs, whether for recesses, ''off the record'' discussions, mechanical failure, or otherwise.

(8) *Filing*. If a videotaped deposition is used at the hearing, the original of the videotape recording, together with the transcript, the operator's log index, and a certificate of the operator attesting to the accuracy of the tape, shall be filed with the Judge. No part of a videotaped deposition shall be released or made available to any member of the public unless authorized by the Commission or the Judge.

(9) *Objections*. Requests for prehearing rulings on the admissibility of evidence obtained during a videotaped deposition shall be accompanied by appropriate pages of the written transcript. If the objection involves matters peculiar to the videotaping, a copy of the videotape and equipment for viewing the tape shall also be provided to the Commission or Judge.

(10) *Use at hearing; purged tapes*. A party desiring to offer a videotape deposition at the hearing shall be responsible for having available appropriate playback equipment and a trained operator. After the designation by all parties of the portions of a videotape to be used at the hearing, an edited copy of the tape, purged of unnecessary portions (and any portions to which objections have been sustained), must be prepared by the offering party to facilitate continuous playback; but a copy of the edited tape shall be made available to other parties at least 10 days before it is used, and the unedited original of the tape shall also be available at the hearing.

[51 FR 32015, Sept. 8, 1986; 52 FR 13832, Apr. 27, 1987, as amended at 57 FR 41686, Sept. 11, 1992; 74 FR 63987, Dec. 7, 2009]

§ 2200.57 Issuance of subpoenas; petitions to revoke or modify subpoenas; right to inspect or copy data.

(a) *Issuance of subpoenas*. On behalf of the Commission or any member thereof, the Judge shall, on the application of any party, issue to the applying party subpoenas requiring the attendance and testimony of witnesses and

the production of any evidence, including relevant books, records, correspondence, or documents, in his possession or under his control. The party to whom the subpoena is issued shall be responsible for its service. Applications for subpoenas, if filed prior to the assignment of the case to a Judge, shall be filed with the Executive Secretary at One Lafayette Centre, 1120–20th Street NW., 9th Floor, Washington, DC 20036–3457. After the case has been assigned to a Judge, applications shall be filed with the Judge. Applications for subpoena(s) may be made ex parte. The subpoena shall show on its face the name and address of the party at whose request the subpoena was issued.

(b) *Service of subpoenas.* A subpoena may be served by any person who is not a party and is not less than 18 years of age. Service of a subpoena upon a person named therein may be made by service on the person named, by certified mail return receipt requested, or by leaving a copy at the person's principal place of business or at the person's residence with some person of suitable age and discretion residing therein.

(c) *Revocation or modification of subpoenas.* Any person served with a subpoena, whether ad testificandum or duces tecum, shall, within 5 days after the date of service of the subpoena upon him, move in writing to revoke or modify the subpoena if he does not intend to comply. All motions to revoke or modify shall be served on the party at whose request the subpoena was issued. The Judge or the Commission shall revoke or modify the subpoena if in its opinion the evidence whose production is required does not relate to any matter under investigation or in question in the proceedings or the subpoena does not describe with sufficient particularity the evidence whose production is required, or if for any other reason sufficient in law the subpoena is otherwise invalid. The Judge or the Commission, as the case may be, shall make a simple statement of procedural or other grounds for the ruling on the motion to revoke or modify. The motion to revoke or modify, any answer filed thereto, and any ruling thereon shall become a part of the record.

(d) *Rights of persons compelled to submit data.* Persons compelled to submit data or evidence at a public proceeding are entitled to retain or, on payment of lawfully prescribed costs, to procure copies of transcripts of the data or evidence submitted by them.

(e) *Failure to comply with subpoena.* Upon the failure of any person to comply with a subpoena issued upon the request of a party, the Commission by its counsel shall initiate proceedings in the appropriate district court for the enforcement thereof, if in its judgment the enforcement of such subpoena would be consistent with law and with policies of the Act. Neither the Commission nor its counsel shall be deemed thereby to have assumed responsibility for the effective prosecution of the same before the court.

[51 FR 32015, Sept. 8, 1986; 52 FR 13832, Apr. 27, 1987, as amended at 57 FR 41687, Sept. 11, 1992; 58 FR 26065, Apr. 30, 1993; 62 FR 35963, July 3, 1997; 73 FR 56492, Sept. 29, 2008]

Subpart E—Hearings

§ 2200.60 Notice of hearing; location.

Except by agreement of the parties, or in an expedited proceeding under § 2200.103, notice of the time, place, and nature of the first setting of a hearing shall be given to the parties and intervenors at least 30 days in advance of the hearing. If a hearing is being rescheduled, or if exigent circumstances are present, at least 10 days notice shall be given. The Judge will designate a place and time of hearing that involves as little inconvenience and expense to the parties as is practicable.

[51 FR 32015, Sept. 8, 1986; 52 FR 13832, Apr. 27, 1987, as amended at 62 FR 35963, July 3, 1997; 74 FR 63987, Dec. 7, 2009]

§ 2200.61 Submission without hearing.

A case may be fully stipulated by the parties and submitted to the Commission or Judge for a decision at any time. The stipulation of facts shall be in writing and signed by the parties or their representatives. The submission of a case under this rule does not alter the burden of proof, the requirements otherwise applicable with respect to adducing proof, or the effect of failure

of proof. Motions for summary judgment are covered by Federal Rule of Civil Procedure 56.

[51 FR 32015, Sept. 8, 1986, as amended at 74 FR 63987, Dec. 7, 2009]

§ 2200.62 Postponement of hearing.

(a) *Motion to postpone*. A hearing may be postponed by the Judge on his own initiative or for good cause shown upon the motion of a party. A motion for postponement shall state the position of the other parties, either by a joint motion or by a representation of the moving party. The filing of a motion for postponement does not automatically postpone a hearing.

(b) *Grounds for postponement*. A motion for postponement grounded on conflicting engagements of counsel or employment of new counsel shall be filed promptly after notice is given of the hearing, or as soon as the conflict is learned of or the engagement occurs.

(c) *When motion must be received*. A motion to postpone a hearing must be received at least 7 days prior to the hearing. A motion for postponement received less than 7 days prior to the hearing will generally be denied unless good cause is shown for late filing.

(d) *Postponement in excess of 60 days*. No postponement in excess of 60 days shall be granted without the concurrence of the Chief Administrative Law Judge. The original of any motion seeking a postponement in excess of 60 days shall be filed with the Judge and a copy sent to the Chief Administrative Law Judge.

[51 FR 32015, Sept. 8, 1986; 52 FR 13832, Apr. 27, 1987; 74 FR 63987, Dec. 7, 2009]

§ 2200.63 Stay of proceedings.

(a) *Motion for stay*. Stays are not favored. A party seeking a stay of a case assigned to a Judge shall file a motion for stay with the Judge and send a copy to the Chief Administrative Law Judge. A motion for a stay shall state the position of the other parties, either by a joint motion or by the representation of the moving party. The motion shall set forth the reasons a stay is sought and the length of the stay requested.

(b) *Ruling on motion to stay*. The Judge, with the concurrence of the Chief Administrative Law Judge, may grant any motion for stay for the period requested or for such period as is deemed appropriate.

(c) *Periodic reports required*. The parties in a stayed proceeding shall be required to submit periodic reports on such terms and conditions as the Judge may direct. The length of time between the reports shall be no longer than 90 days unless the Commission or the Judge otherwise orders.

[51 FR 32015, Sept. 8, 1986, as amended at 57 FR 41687, Sept. 11, 1992; 73 FR 56492, Sept. 29, 2008]

§ 2200.64 Failure to appear.

(a) *Attendance at hearing*. The failure of a party to appear at a hearing may result in a decision against that party.

(b) *Requests for reinstatement*. Requests for reinstatement must be made, in the absence of extraordinary circumstances, within 5 days after the scheduled hearing date. See § 2200.90(b)(3).

(c) *Rescheduling hearing*. The Commission or the Judge, upon a showing of good cause, may excuse such failure to appear. In such event, the hearing will be rescheduled as expeditiously as possible from the issuance of the Judge's order.

[51 FR 32015, Sept. 8, 1986; 52 FR 13832, Apr. 27, 1987, as amended at 57 FR 41687, Sept. 11, 1992; 74 FR 63987, Dec. 7, 2009]

§ 2200.65 Payment of witness fees and mileage; fees of persons taking depositions.

Witnesses summoned before the Commission or the Judge shall be paid the same fees and mileage that are paid witnesses in the courts of the United States, and witnesses whose depositions are taken and the persons taking the same shall severally be entitled to the same fees as are paid for like services in the courts of the United States. Witness fees and mileage shall be paid by the party at whose instance the witness appears, and the person taking a deposition shall be paid by the party at whose instance the deposition is taken.

§ 2200.66 Transcript of testimony.

(a) *Hearings*. Hearings shall be transcribed verbatim. A copy of the transcript of testimony taken at the hearing, duly certified by the reporter, shall be filed with the Judge before whom the matter was heard.

(b) *Payment for transcript*. The Commission shall bear all expenses for court reporters' fees and for copies of the hearing transcript received by it. Each party is responsible for securing and paying for its copy of the transcript.

(c) *Correction of errors*. Error in the transcript of the hearing may be corrected by the Judge on his own motion, on joint motion by the parties, or on motion by any party. The motion shall state the error in the transcript and the correction to be made. Corrections will be made by hand with pen and ink and by the appending of an errata sheet.

§ 2200.67 Duties and powers of Judges.

It shall be the duty of the Judge to conduct a fair and impartial hearing, to assure that the facts are fully elicited, to adjudicate all issues and avoid delay. The Judge shall have authority with respect to cases assigned to him, between the time he is designated and the time he issues his decision, subject to the rules and regulations of the Commission, to:

(a) Administer oaths and affirmations;

(b) Issue authorized subpoenas;

(c) Rule upon petitions to revoke subpoenas;

(d) Rule upon offers of proof and receive relevant evidence;

(e) Take or cause depositions to be taken whenever the needs of justice would be served;

(f) Regulate the course of the hearing and, if appropriate or necessary, exclude persons or counsel from the hearing for contemptuous conduct and strike all related testimony of witnesses refusing to answer any proper questions;

(g) Hold conferences for the settlement or simplification of the issues;

(h) Dispose of procedural requests or similar matters, including motions referred to the Judge by the Commission and motions to amend pleadings; also to dismiss complaints or portions thereof, and to order hearings reopened or, upon motion, consolidated prior to issuance of his decision;

(i) Make decisions in conformity with section 557 of title 5, United States Code;

(j) Call and examine witnesses and to introduce into the record documentary or other evidence;

(k) Request the parties to state their respective positions concerning any issue in the case or theory in support thereof;

(l) Adjourn the hearing as the needs of justice and good administration require;

(m) Take any other action necessary under the foregoing and authorized by the published rules and regulations of the Commission.

[51 FR 32015, Sept. 8, 1986, as amended at 62 FR 35963, July 3, 1997; 74 FR 63987, Dec. 7, 2009]

§ 2200.68 Disqualification of the Judge.

(a) *Discretionary withdrawal*. A Judge may withdraw from a proceeding whenever he deems himself disqualified.

(b) *Request for withdrawal*. Any party may request the Judge, at any time following his designation and before the filing of his decision, to withdraw on ground of personal bias or disqualification, by filing with him promptly upon the discovery of the alleged facts an affidavit setting forth in detail the matters alleged to constitute grounds for disqualification.

(c) *Granting request*. If, in the opinion of the Judge, the affidavit referred to in paragraph (b) of this section is filed with due diligence and is sufficient on its face, the Judge shall forthwith disqualify himself and withdraw from the proceeding.

(d) *Denial of request*. If the Judge does not disqualify himself and withdraw from the proceedings, he shall so rule upon the record, stating the grounds for his ruling and shall proceed with the hearing, or, if the hearing has closed, he shall proceed with the issuance of his decision, and the provisions of § 2200.90 shall thereupon apply.

[51 FR 32015, Sept. 8, 1986, as amended at 74 FR 63987, Dec. 7, 2009]

§ 2200.69 Examination of witnesses.

Witnesses shall be examined orally under oath or affirmation. Opposing parties have the right to cross-examine any witness whose testimony is introduced by an adverse party. All parties shall have the right to cross-examine any witness called by the Judge pursuant to § 2200.67(j).

§ 2200.70 Exhibits.

(a) *Marking exhibits.* All exhibits offered in evidence by a party shall be marked for identification before or during the hearing. Exhibits shall be marked with the case docket number, with a designation identifying the party or intervenor offering the exhibit, and numbered consecutively.

(b) *Removal or substitution of exhibits in evidence.* Unless the Judge finds it impractical, a copy of each exhibit shall be given to the other parties and intervenors. A party may remove an exhibit from the official record during the hearing or at the conclusion of the hearing only upon permission of the Judge. The Judge, in his discretion, may permit the substitution of a duplicate for any original document offered into evidence.

(c) *Reasons for denial of admitting exhibit.* A Judge may, in his discretion, deny the admission of any exhibit because of its excessive size, weight, or other characteristic that prohibits its convenient transportation and storage. A party may offer into evidence photographs, models or other representations of any such exhibit.

(d) *Rejected exhibits.* All exhibits offered but denied admission into evidence, except exhibits referred to in paragraph (c) of this section, shall be placed in a separate file designated for rejected exhibits.

(e) *Return of physical exhibits.* A party may on motion request the return of a physical exhibit within 30 days after expiration of the time for filing a petition for review of a Commission final order in a United States Court of Appeals under section 11 of the Act, 29 U.S.C. 660, or within 30 days after completion of any proceedings initiated thereunder. The motion shall be addressed to the Executive Secretary and provide supporting reasons. The exhibit shall be returned if the Executive Secretary determines that it is no longer necessary for use in any Commission proceeding.

(f) *Request for custody of physical exhibit.* Any person may on motion to the Executive Secretary request custody of a physical exhibit for use in any court or tribunal. The motion shall state the reasons for the request and the duration of custody requested. If the exhibit has been admitted in a pending Commission case, the motion shall be served on all parties to the proceeding. Any person granted custody of an exhibit shall inform the Executive Secretary of the status every 6 months of his continuing need for the exhibit and return the exhibit after completion of the proceeding.

(g) *Disposal of physical exhibit.* Any physical exhibit may be disposed of by the Commission's Executive Secretary at any time more than 30 days after expiration of the time for filing a petition for review of a Commission final order in a United States Court of Appeals under section 11 of the Act, 29 U.S.C. 660, or 30 days after completion of any proceedings initiated thereunder.

[51 FR 32015, Sept. 8, 1986; 52 FR 13832, Apr. 27, 1987; 74 FR 63987, Dec. 7, 2009]

§ 2200.71 Rules of evidence.

The Federal Rules of Evidence are applicable.

§ 2200.72 Objections.

(a) *Statement of objection.* Any objection with respect to the conduct of the hearing, including any objection to the introduction of evidence or a ruling by the Judge, may be stated orally or in writing, accompanied by a short statement of the grounds for the objection, and shall be included in the record. No such objection shall be deemed waived by further participation in the hearing.

(b) *Offer of proof.* Whenever evidence is excluded from the record, the party offering such evidence may make an offer of proof, which shall be included in the record of the proceeding.

§ 2200.73 Interlocutory review.

(a) *General.* Interlocutory review of a Judge's ruling is discretionary with the Commission. A petition for interlocutory review may be granted only where

the petition asserts and the Commission finds:

(1) That the review involves an important question of law or policy about which there is substantial ground for difference of opinion and that immediate review of the ruling may materially expedite the final disposition of the proceedings; or

(2) That the ruling will result in a disclosure, before the Commission may review the Judge's report, of information that is alleged to be privileged.

(b) *Petition for interlocutory review.* Within 5 days following the receipt of a Judge's ruling from which review is sought, a party may file a petition for interlocutory review with the Commission. Responses to the petition, if any, shall be filed within 5 days following service of the petition. A copy of the petition and responses shall be filed with the Judge. The petition is denied unless granted within 30 days of the date of receipt by the Commission's Executive Secretary. A corporate party that files a petition for interlocutory review or a response to such a petition under this section shall file with the Commission a copy of its declaration of corporate parents, subsidiaries, and affiliates previously filed with the Judge under the requirements of § 2200.35 or § 2200.37(d)(4). In its discretion the Commission may refuse to accept for filing a petition or response that fails to comply with this disclosure requirement. A corporate party filing the declaration required by this paragraph shall have a continuing duty to advise the Executive Secretary of any changes to its declaration until the Commission either denies the petition for interlocutory appeal or issues its decision on the merits of the appeal.

(c) *Denial without prejudice.* The Commission's action in denying a petition for interlocutory review shall not preclude a party from raising an objection to the Judge's interlocutory ruling in a petition for discretionary review.

(d) *Stay*—(1) *Trade secret matters.* The filing of a petition for interlocutory review of a Judge's ruling concerning an alleged trade secret shall stay the effect of the ruling until the Commission denies the petition or rules on the merits.

(2) *Other cases.* In all other cases, the filing or granting of a petition for interlocutory review shall not stay a proceeding or the effect of a ruling unless otherwise ordered.

(e) *Judge's comments.* The Judge may be requested to provide the Commission with his written views on whether the petition is meritorious. The Judge shall serve copies of these comments on all parties when he files them with the Commission.

(f) *Briefs.* Should the Commission desire briefs on the issues raised by an interlocutory review, it shall give notice to the parties. See § 2200.93—Briefs before the Commission.

(g) *When filing effective.* A petition for interlocutory review is deemed to be filed only when received by the Commission.

[51 FR 32015, Sept. 8, 1986, as amended at 54 FR 18491, May 1, 1989; 55 FR 22782, June 4, 1990; 74 FR 63987, Dec. 7, 2009]

§ 2200.74 Filing of briefs and proposed findings with the Judge; oral argument at the hearing.

(a) *General.* A party is entitled to a reasonable period at the close of the hearing for oral argument, which shall be included in the stenographic report of the hearing. Any party shall be entitled, upon request made before the close of hearing, to file a brief, proposed findings of fact and conclusions of law, or both, with the Judge. In lieu of briefs, the Judge may permit or direct the parties to file memoranda or statements of authority.

(b) *Time.* Briefs shall be filed simultaneously on a date established by the Judge. A motion for extension of time for filing any brief shall be made at least 3 days prior to the due date and shall recite that the moving party has advised the other parties of the motion. Reply briefs shall not be allowed except by order of the Judge.

(c) *Untimely briefs.* Untimely briefs will not be accepted unless accompanied by a motion setting forth good cause for the delay.

[51 FR 32015, Sept. 8, 1986, as amended at 74 FR 63987, Dec. 7, 2009]

Subpart F—Posthearing Procedures

§ 2200.90 Decisions of Judges.

(a) *Contents.* The Judge shall prepare a decision that constitutes his final disposition of the proceedings. The decision shall be in writing and shall include findings of fact, conclusions of law, and the reasons or bases for them, on all the material issues of fact, law or discretion presented on the record. The decision shall include an order affirming, modifying or vacating each contested citation item and each proposed penalty, or directing other appropriate relief. A decision finally disposing of a petition for modification of the abatement period shall contain an order affirming or modifying the abatement period.

(b) *The Judge's report*—(1) *Mailing to parties.* The Judge shall mail or otherwise transmit a copy of his decision to each party.

(2) *Docketing of Judge's report by Executive Secretary.* On the eleventh day after the transmittal of his decision to the parties, the Judge shall file his report with the Executive Secretary for docketing. The report shall consist of the record, including the Judge's decision, any petitions for discretionary review and statements in opposition to such petitions. Promptly upon receipt of the Judge's report, the Executive Secretary shall docket the report and notify all parties of the docketing date. The date of docketing of the Judge's report is the date that the Judge's report is made for purposes of section 12(j) of the Act, 29 U.S.C. 661(j).

(3) *Correction of errors; Relief from default.* Until the Judge's report has been directed for review or, in the absence of a direction for review, until the decision has become a final order, the Judge may correct clerical errors and errors arising through oversight or inadvertence in decisions, orders or other parts of the record. If a Judge's report has been directed for review the decision may be corrected during the pendency of review with leave of the Commission. Until the Judge's report has been docketed by the Executive Secretary, the Judge may relieve a party of default or grant reinstatement under §§ 2200.101(b), 2200.52(f) or 2200.64(b).

(c) *Filing documents after the docketing date.* Except for papers filed under paragraph (b)(3) of this section, which shall be filed with the Judge, on or after the date of the docketing of the Judge's report all documents shall be filed with the Executive Secretary.

(d) *Judge's decision final unless review directed.* If no Commissioner directs review of a report on or before the thirtieth day following the date of docketing of the Judge's report, the decision of the Judge shall become a final order of the Commission.

[51 FR 32015, Sept. 8, 1986; 52 FR 13832, Apr. 27, 1987, as amended at 62 FR 35963, July 3, 1997; 70 FR 22790, May 3, 2005]

§ 2200.91 Discretionary review; petitions for discretionary review; statements in opposition to petitions.

(a) *Review discretionary.* Review by the Commission is not a right. A Commissioner may, as a matter of discretion, direct review on his own motion or on the petition of a party.

(b) *Petitions for discretionary review.* A party adversely affected or aggrieved by the decision of the Judge may seek review by the Commission by filing a petition for discretionary review. Discretionary review by the Commission may be sought by filing with the Judge a petition for discretionary review within the 10-day period provided by § 2200.90(b)(2). Review by the Commission may also be sought by filing directly with the Executive Secretary a petition for discretionary review. A petition filed directly with the Executive Secretary shall be filed within 20 days after the date of docketing of the Judge's report. The earlier a petition is filed, the more consideration it can be given. A petition for discretionary review may be conditional, and may state that review is sought only if a Commissioner were to direct review on the petition of an opposing party.

(c) *Cross-petitions for discretionary review.* Where a petition for discretionary review has been filed by one party, any other party adversely affected or aggrieved by the decision of the Judge may seek review by the Commission by filing a cross-petition for discretionary

review. The cross-petition may be conditional. See paragraph (b) of this section. A cross-petition shall be filed with the Judge during the 10 days provided by § 2200.90(b) or directly with the Executive Secretary within 27 days after the date of docketing of the Judge's report. The earlier a cross-petition is filed, the more consideration it can be given.

(d) *Contents of the petition.* No particular form is required for a petition for discretionary review. A petition should state why review should be directed, including: Whether the Judge's decision raises an important question of law, policy or discretion; whether review by the Commission will resolve a question about which the Commission's Judges have rendered differing opinions; whether the Judge's decision is contrary to law or Commission precedent; whether a finding of material fact is not supported by a preponderance of the evidence; whether a prejudicial error of procedure or an abuse of discretion was committed. A petition should concisely state the portions of the decision for which review is sought and should refer to the citations and citation items (for example, citation 3, item 4a) for which review is sought. A petition shall not incorporate by reference a brief or legal memorandum. Brevity and the inclusion of precise references to the record and legal authorities will facilitate prompt review of the petition.

(e) *When filing effective.* A petition for discretionary review is filed when received. If a petition has been filed with the Judge, another petition need not be filed with the Commission.

(f) *Failure to file.* The failure of a party adversely affected or aggrieved by the Judge's decision to file a petition for discretionary review may foreclose court review of the objections to the Judge's decision. *See Keystone Roofing Co.* v. *Dunlop*, 539 F.2d 960 (3d Cir. 1976).

(g) *Statements in opposition to petition.* Statements in opposition to petitions for discretionary review may be filed in the manner specified in this section for the filing of petitions for discretionary review. Statements in opposition shall concisely state why the Judge's decision should not be reviewed with respect to each portion of the petition to which it is addressed.

[51 FR 32015, Sept. 8, 1986; 52 FR 13832, Apr. 27, 1987, as amended at 55 FR 22783, June 4, 1990; 62 FR 35963, July 3, 1997; 73 FR 56492, Sept. 29, 2008; 74 FR 63987, Dec. 7, 2009]

§ 2200.92 Review by the Commission.

(a) *Jurisdiction of the Commission; issues on review.* Unless the Commission orders otherwise, a direction for review establishes jurisdiction in the Commission to review the entire case. The issues to be decided on review are within the discretion of the Commission but ordinarily will be those stated in the direction for review, those raised in the petitions for discretionary review, or those stated in any later order.

(b) *Review on a Commissioner's motion; issues on review.* At any time within 30 days after the docketing date of the Judge's report, a Commissioner may, on his own motion, direct that a Judge's decision be reviewed. In the absence of a petition for discretionary review, a Commissioner will normally not direct review unless the case raises novel questions of law or policy or questions involving conflict in Administrative Law Judges' decisions. When a Commissioner directs review on his own motion, the issues ordinarily will be those specified in the direction for review or any later order.

(c) *Issues not raised before Judge.* The Commission will ordinarily not review issues that the Judge did not have the opportunity to pass upon. In exercising discretion to review issues that the Judge did not have the opportunity to pass upon, the Commission may consider such factors as whether there was good cause for not raising the issue before the Judge, the degree to which the issue is factual, the degree to which proceedings will be disrupted or delayed by raising the issue on review, whether the ability of an adverse party to press a claim or defense would be impaired, and whether considering the new issue would avoid injustice or ensure that judgment will be rendered in accordance with the law and facts.

§ 2200.93 Briefs before the Commission.

(a) *Requests for briefs.* The Commission ordinarily will request the parties

to file briefs on issues before the Commission. After briefs are requested, a party may, instead of filing a brief, file a letter setting forth its arguments, a letter stating that it will rely on its petition for discretionary review or previous brief, or a letter stating that it wishes the case decided without its brief. The provisions of this section apply to the filing of briefs and letters filed in lieu of briefs.

(b) *Filing briefs*. Unless the briefing notice states otherwise:

(1) *Time for filing briefs*. The party required to file the first brief shall do so within 40 days after the date of the briefing notice. All other parties shall file their briefs within 30 days after the first brief is served. Any reply brief permitted by these rules or by order shall be filed within 15 days after the second brief is served.

(2) *Sequence of filing*. (i) If one petition for discretionary or interlocutory review has been filed, the petitioning party shall file the first brief.

(ii) If more than one petition has been filed but only one was granted, the party whose petition was granted shall file the first brief.

(iii) If more than one petition has been filed, and more than one has been granted or none has been granted, the Secretary shall file the first brief.

(iv) If no petition has been filed, the Secretary shall file the first brief.

(3) *Reply briefs*. The party who filed the first brief may file a reply brief. Additional briefs are otherwise not allowed except by leave of the Commission.

(c) *Motion for extension of time for filing brief*. An extension of time to file a brief will ordinarily not be granted except for good cause shown. A motion for extension of time to file a brief shall be filed at the Commission no later than 3 days prior to the expiration of the time limit prescribed in paragraph (b) of this section, shall comply with § 2200.40 and shall include the following information: When the brief is due, the number and duration of extensions of time that have been granted to each party, the length of extension being requested, the specific reason for the extension being requested, and an assurance that the brief will be filed within the time extension requested.

(d) *Consequences of failure to timely file brief*. The Commission may decline to accept a brief that is not timely filed. If a petitioning party fails to respond to a briefing notice or expresses no interest in review, the Commission may vacate the direction for review, or it may decide the case without that party's brief. If the non-petitioning party fails to respond to a briefing notice or expresses no interest in review, the Commission may decide the case without that party's brief. If a case was directed for review upon a Commissioner's own motion, and any party fails to respond to the briefing notice, the Commission may either vacate the direction for review or decide the case without briefs.

(e) *Length of brief*. Except by permission of the Commission, a main brief, including briefs and legal memoranda it incorporates by reference, shall contain no more than 35 pages of text. A reply brief, including briefs and legal memoranda it incorporates by reference, shall contain no more than 20 pages of text.

(f) *Table of contents*. A brief in excess of 15 pages shall include a table of contents.

(g) *Failure to meet requirements*. The Commission may return briefs that do not meet the requirements of paragraphs (e) and (f) of this section.

(h) *Brief of an amicus curiae*. The Commission may allow a brief of an amicus curiae pursuant to the criteria of § 2200.24. Any brief of an amicus curiae must meet the requirements of paragraphs (b) through (g) of this section. No reply brief of an amicus curiae will be received.

[51 FR 32015, Sept. 8, 1986, as amended at 57 FR 41687, Sept. 11, 1992; 62 FR 35963, July 3, 1997; 74 FR 63987, Dec. 7, 2009]

§ 2200.94 Stay of final order.

(a) *Who may file*. Any party aggrieved by a final order of the Commission may, while the matter is within the jurisdiction of the Commission, file a motion for a stay.

(b) *Contents of motion*. Such motion shall set forth the reasons a stay is sought and the length of the stay requested.

(c) *Ruling on motion*. The Commission may order such stay for the period requested or for such longer or shorter period as it deems appropriate.

§ 2200.95 Oral argument before the Commission.

(a) *When ordered*. Upon motion of any party, or upon its own motion, the Commission may order oral argument. Parties requesting oral argument must demonstrate why oral argument would facilitate resolution of the issues before the Commission. Normally, motions for oral argument shall not be considered until after all briefs have been filed.

(b) *Notice of argument*. The Executive Secretary shall advise all parties whether oral argument is to be heard. Within a reasonable time before the oral argument is scheduled, the Executive Secretary shall inform the parties of the time and place therefor, the issues to be heard, and the time allotted to the parties.

(c) *Postponement*. (1) Except under extraordinary circumstances, a request for postponement must be filed at least 7 days before oral argument is scheduled.

(2) The Executive Secretary shall notify the parties of a postponement in a manner best calculated to avoid unnecessary travel or inconvenience to the parties. The Executive Secretary shall inform all parties of the new time and place for the oral argument.

(d) *Order and content of argument*. (1) Counsel shall be afforded such time for oral argument as the Commission may provide by order. Requests for enlargement of time may be made by motion filed reasonably in advance of the date fixed for the argument.

(2) The petitioning party shall argue first. If the case is before the Commission on cross-petitions, the Commission will inform the parties in advance of the order of appearance.

(3) Counsel are expected to cover all anticipated issues in their arguments in chief. Therefore, rebuttal will normally not be allowed. Should unexpected matters arise, the Commission, in its discretion, may give counsel additional time.

(4) Oral argument should undertake to emphasize and clarify the written arguments appearing in the briefs. The Commission will look with disfavor on any oral argument that is read from a previously filed document.

(5) At any time, the Commission may terminate a party's argument or interrupt the party's presentation for questioning by the Commissioners.

(e) *Failure to appear*. Should either party fail to appear for oral argument, the party present may be allowed to proceed with its argument.

(f) *Consolidated cases*. Where two or more consolidated cases are scheduled for oral argument, the consolidated cases shall be considered as one case for the purpose of allotting time to the parties unless the Commission otherwise directs.

(g) *Multiple counsel*. Where more than one counsel argues for a party to the case or for multiple parties on the same side in the case, it is counsels' responsibility to agree upon a fair division of the total time allotted. In the event of a failure to agree, the Commission will allocate the time. The Commission may, in its discretion, limit the number of counsel heard for each party or side in the argument. No later than 3 days prior to the date of scheduled argument, the Commission must be notified of the names of the counsel who will argue.

(h) *Exhibits/visual aids*. (1) The parties may use models, specimens, samples, charts or exhibits introduced into evidence at the hearing. If a party wishes to use a visual aid not part of the record, written notice of the proposed use shall be given to opposing counsel 15 days prior to the argument. Objections, if any, shall be in writing, served on all adverse parties, and filed not fewer than 5 days before the argument.

(2) No visual aid shall introduce or rely upon facts or evidence not already part of the record.

(3) If visual aids or exhibits other than documents are to be used at the argument, counsel shall arrange with the Executive Secretary to have them placed in the hearing room on the date of the argument before the Commission convenes.

(4) Parties using visual aids not introduced into evidence shall have them removed from the hearing room unless the Commission directs otherwise. If

such visual aids are not reclaimed by the party within a reasonable time after notice is given by the Executive Secretary, such visual aids shall be disposed of at the discretion of the Executive Secretary.

(i) *Recording oral argument.* (1) Unless the Commission directs otherwise, oral arguments shall be electronically recorded and made part of the record. Any other sound recording in the hearing room is prohibited. Oral arguments shall also be transcribed verbatim. A copy of the transcript of the oral argument taken by a qualified court reporter, shall be filed with the Commission. The Commission shall bear all expenses for court reporters' fees and for copies of the hearing transcript received by it.

(2) Persons desiring to listen to the recordings shall make appropriate arrangements with the Executive Secretary. Any party desiring a written copy of the transcript is responsible for securing and paying for its copy.

(3) Error in the transcript of the oral argument may be corrected by the Commission on its own motion, on joint motion by the parties, or on motion by any party. The motion shall state the error in the transcript and the correction to be made. Corrections will be made by hand with pen and ink and by the appending of an errata sheet.

(j) *Failure to file brief.* A party who fails to file a brief shall not be heard at the time of oral argument except by permission of the Commission.

(k) *Participation in oral argument by amicus curiae.* (1) An amicus curiae will not be permitted to participate in oral argument without leave of the Commission upon proper motion.

(2) A motion by amicus curiae seeking leave to participate in oral argument shall be filed no later than 14 days prior to the date oral argument is scheduled.

(3) The motion of an amicus curiae for leave to participate at oral argument shall identify the interest of the applicant and shall state the reason(s) why its participation at oral argument is desirable.

(4) Motions in opposition to the motion of an amicus curiae for leave to participate in the oral argument must be filed within 7 days of the date of the motion.

[55 FR 22783, June 4, 1990, as amended at 57 FR 41688, Sept. 11, 1992; 70 FR 22790, May 3, 2005; 74 FR 63987, Dec. 7, 2009]

§ 2200.96 Commission receipt pursuant to 28 U.S.C. 2112(a)(1) of copies of petitions for judicial review of Commission orders when petitions for review are filed in two or more courts of appeals with respect to the same order.

The Commission officer and office designated to receive, pursuant to 28 U.S.C. 2112(a)(1), copies of petitions for review of Commission orders, from the persons instituting the review proceedings in a court of appeals, are the Executive Secretary and the Office of the Executive Secretary at the Commission's office, One Lafayette Centre, 1120–20th Street NW., 9th Floor, Washington, DC 20036–3457. Five copies of the petition shall be submitted pursuant to this section. Each copy shall state that it is being submitted to the Commission pursuant to 28 U.S.C. 2112 by the persons or person who filed the petition in the court of appeals and shall be stamped by the court with the date of filing.

NOTE: 28 U.S.C. 2112(a) contains certain applicable requirements.

[54 FR 18491, May 1, 1989, as amended at 58 FR 26065, Apr. 30, 1993; 73 FR 56492, Sept. 29, 2008]

Subpart G—Miscellaneous Provisions

§ 2200.100 Settlement.

(a) *Policy.* Settlement is permitted and encouraged by the Commission at any stage of the proceedings.

(b) *Requirements.* The Commission does not require that the parties include any particular language in a settlement agreement, but does require that the agreement specify the terms of settlement for each contested item, specify any contested item or issue that remains to be decided (if any remain), and state whether any affected employees who have elected party status have raised an objection to the reasonableness of any abatement time. Unless the settlement agreement states otherwise, the withdrawal of a

notice of contest, citation, notification of proposed penalty, or petition for modification of abatement period will be with prejudice.

(c) *Filing; service and notice.* A settlement submitted for approval after the Judge's report has been directed for review shall be filed with the Executive Secretary. When a settlement agreement is filed with the Judge or the Executive Secretary, proof of service shall be filed with the settlement agreement, showing service upon all parties and authorized employee representatives in the manner prescribed by § 2200.7(c) and the posting of notice to non-party affected employees in the manner prescribed by § 2200.7(g). The parties shall also file a final consent order for adoption by the Judge. If the time has not expired under these rules for electing party status, or if party status has been elected, an order terminating the litigation before the Commission because of the settlement shall not be issued until at least 10 days after service or posting to consider any affected employee's or authorized employee representative's objection to the reasonableness of any abatement time. The affected employee or authorized employee representative shall file any such objection within this time. If such objection is filed or stated in the settlement agreement, the Commission or the Judge shall provide an opportunity for the affected employees or authorized employee representative to be heard and present evidence on the objection, which shall be limited to the reasonableness of the abatement time.

(d) *Form of settlement document.* It is preferred that settlement documents be typewritten in conformance with § 2200.30(a). However, a settlement document that is hand-written or printed in ink and is legible shall be acceptable for filing.

[51 FR 32015, Sept. 8, 1986, as amended at 57 FR 41688, Sept. 11, 1992]

§ 2200.101 Failure to obey rules.

(a) *Sanctions.* When any party has failed to plead or otherwise proceed as provided by these rules or as required by the Commission or Judge, he may be declared to be in default either on the initiative of the Commission or Judge, after having been afforded an opportunity to show cause why he should not be declared to be in default, or on the motion of a party. Thereafter, the Commission or Judge, in their discretion, may enter a decision against the defaulting party or strike any pleading or document not filed in accordance with these rules.

(b) *Motion to set aside sanctions.* For reasons deemed sufficient by the Commission or Judge and upon motion expeditiously made, the Commission or Judge may set aside a sanction imposed under paragraph (a) of this section. See § 2200.90(b)(3).

(c) *Discovery sanctions.* This section does not apply to sanctions for failure to comply with orders compelling discovery, which are governed by § 2200.52(f).

(d) *Show cause orders.* All show cause orders issued by the Commission or Judge under paragraph (a) of this section shall be served upon the affected party by certified mail, return receipt requested.

[70 FR 22790, May 3, 2005]

§ 2200.102 Withdrawal.

A party may withdraw its notice of contest, citation, notification of proposed penalty, or petition for modification of abatement period at any stage of a proceeding. The notice of withdrawal shall be served in accordance with § 2200.7(c) upon all parties and authorized employee representatives that are eligible to elect, but have not elected, party status. It shall also be posted in the manner prescribed in § 2200.7(g) for the benefit of any affected employees not represented by an authorized employee representative who are eligible to elect, but have not elected, party status. Proof of service shall accompany the notice of withdrawal.

[51 FR 32015, Sept. 8, 1986; 52 FR 13832, Apr. 27, 1987]

§ 2200.103 Expedited proceeding.

(a) *When ordered.* Upon application of any party or intervenor or upon its own motion, the Commission may order an expedited proceeding. When an expedited proceeding is ordered by the Commission, the Executive Secretary shall notify all parties and intervenors.

(b) *Automatic expedition.* Cases initiated by employee contests and petitions for modification of abatement period shall be expedited.

(c) *Effect of ordering expedited proceeding.* When an expedited proceeding is required by these rules or ordered by the Commission, it shall take precedence on the docket of the Judge to whom it is assigned, or on the Commission's review docket, as applicable, over all other classes of cases, and shall be set for hearing or for the submission of briefs at the earliest practicable date.

(d) *Time sequence set by Judge.* The assigned Judge shall make rulings with respect to time for filing of pleadings and with respect to all other matters, without reference to times set forth in these rules, may order daily transcripts of the hearing, and shall do all other things appropriate to complete the proceeding in the minimum time consistent with fairness.

§ 2200.104 Standards of conduct.

(a) *General.* All representatives appearing before the Commission and its Judges shall comply with the letter and spirit of the Model Rules of Professional Conduct of the American Bar Association.

(b) *Misbehavior before a Judge*—(1) *Exclusion from a proceeding.* A Judge may exclude from participation in a proceeding any person, including a party or its representative, who engages in disruptive behavior, refuses to comply with orders or rules of procedure, continuously uses dilatory tactics, refuses to adhere to standards of orderly or ethical conduct, or fails to act in good faith. The cause for the exclusion shall be stated in writing, or may be stated in the record if the exclusion occurs during the course of the hearing. Where the person removed is a party's attorney or other representative, the Judge shall suspend the proceeding for a reasonable time for the purpose of enabling the party to obtain another attorney or other representative.

(2) *Appeal rights if excluded.* Any attorney or other representative excluded from a proceeding by a Judge may, within 5 days of the exclusion, appeal to the Commission for reinstatement. No proceeding shall be delayed or suspended pending disposition of the appeal.

(c) *Disciplinary action by the Commission.* If an attorney or other representative practicing before the Commission engages in unethical or unprofessional conduct or fails to comply with any rule or order of the Commission or its Judges, the Commission may, after reasonable notice and an opportunity to show cause to the contrary, and after hearing, if requested, take any appropriate disciplinary action, including suspension or disbarment from practice before the Commission.

(d) *Show cause orders.* All show cause orders issued by the Commission under paragraph (c) of this section shall be served upon the affected party by certified mail, return receipt requested.

[51 FR 32015, Sept. 8, 1986, as amended at 55 FR 22783, June 4, 1990; 74 FR 63987, Dec. 7, 2009]

§ 2200.105 Ex parte communication.

(a) *General.* Except as permitted by § 2200.120 or as otherwise authorized by law, there shall be no ex parte communication with respect to the merits of any case not concluded, between any Commissioner, Judge, employee, or agent of the Commission who is employed in the decisional process and any of the parties or intervenors, representatives or other interested persons.

(b) *Disciplinary action.* In the event an ex parte communication occurs, the Commission or the Judge may make such orders or take such actions as fairness requires. The exclusion of a person by a Judge from a proceeding shall be governed by § 2200.104(b). Any disciplinary action by the Commission, including suspension or disbarment, shall be governed by § 2200.104(c).

(c) *Placement on public record.* All ex parte communications in violation of this section shall be placed on the public record of the proceeding.

[51 FR 32015, Sept. 8, 1986, as amended at 70 FR 22790, May 3, 2005]

§ 2200.106 Amendment to rules.

The Commission may at any time upon its own motion or initiative, or upon written suggestion of any interested person setting forth reasonable

grounds therefor, amend or revoke any of the rules contained herein. The Commission invites suggestions from interested parties to amend or revoke rules of procedure. Such suggestions should be addressed to the Executive Secretary of the Commission at One Lafayette Centre, 1120 20th Street, NW., Suite 980, Washington, DC 20036–3457.

[70 FR 22790, May 3, 2005]

§ 2200.107 Special circumstances; waiver of rules.

In special circumstances not contemplated by the provisions of these rules and for good cause shown, the Commission or Judge may, upon application by any party or intervenor or on their own motion, after 3 working days notice to all parties and intervenors, waive any rule or make such orders as justice or the administration of the Act requires.

[57 FR 41688, Sept. 11, 1992]

§ 2200.108 Official Seal of the Occupational Safety and Health Review Commission.

The seal of the Commission shall consist of: A gold eagle outspread, head facing dexter, a shield with 13 vertical stripes superimposed on its breast, holding an olive branch in its claws, the whole superimposed over a plain solid white Greek cross with a green background, encircled by a white band edged in black and inscribed ''Occupational Safety and Health Review Commission'' in black letters.

[51 FR 32015, Sept. 8, 1986; 52 FR 13832, Apr. 27, 1987]

Subpart H—Settlement Part

SOURCE: 64 FR 8246, Feb. 19, 1999, unless otherwise noted.

§ 2200.120 Settlement procedure.

(a) *Voluntary Settlement*—(1) *Applicability and duration*. (i) This section applies only to notices of contests by employers, and to applications for fees under the Equal Access to Justice Act and 29 CFR Part 2204.

(ii) Upon motion of any party after the docketing of the notice of contest, or otherwise with the consent of the parties at any time in the proceedings, the Chief Administrative Law Judge may assign a case to a Settlement Judge for proceedings under this section. In the event either the Secretary or the employer objects to the use of a Settlement Judge procedure, such procedure shall not be imposed.

(2) *Length of voluntary settlement procedures*. The settlement procedures under this section shall be for a period not to exceed 45 days.

(b) *Mandatory settlement*—(1) *Applicability*. This section applies only to notices of contest by employers in which the aggregate amount of the penalties sought by the Secretary is $100,000 or greater.

(2) *Proceedings under this part*. (i) *Assignment of case and appointment of Settlement Judge*. Notwithstanding any other provisions of these rules, upon the docketing of the notice of contest the Chief Administrative Law Judge shall assign to the Settlement Part any case which satisfies the criteria set forth in paragraph (b)(1) of this section. The Chief Administrative Law Judge shall appoint a Settlement Judge, who shall be a Judge other than the one assigned to hear and decide the case, except as provided in paragraph (f)(2) of this section.

(ii) *Discovery proceedings to be followed by settlement proceedings*. The Settlement Judge shall issue a discovery scheduling order and supervise all discovery proceedings. At the conclusion of discovery the Settlement Judge will conduct settlement proceedings during a period not to exceed 60 days. If, at the conclusion of the settlement proceedings the case has not been settled the Settlement Judge shall promptly notify the Chief Administrative Law Judge in accordance with paragraph (f) of this section.

(c) *Powers and duties of Settlement Judges*. (1) The Judge shall confer with the parties on subjects and issues of whole or partial settlement of the case and seek resolution of as many of the issues as is feasible.

(2) The Judge may require the parties to provide statements of the issues in controversy and the factual predicate for each party's position on each issue and may enter other orders as appropriate to facilitate the proceedings.

(3) In voluntary settlement proceedings the Judge may allow or suspend discovery during the settlement proceedings.

(4) The Judge may suggest privately to each attorney or other representative of a party what concessions his or her client should consider and assess privately with each attorney or other representative the reasonableness of the party's case or settlement position.

(5) The Judge may, with the consent of the parties, conduct such other settlement proceedings as may aid in the settlement of the case.

(d) *Settlement conference*—(1) *General*. The Settlement Judge shall convene and preside over conferences between the parties. Settlement conferences may be conducted telephonically or in person. The Judge shall designate a place and time of conference.

(2) *Participation in conference*. The Settlement Judge may require that any attorney or other representative who is expected to try the case for each party be present. The Settlement Judge may also require that the party's representative be accompanied by an official of the party having full settlement authority on behalf of the party. The parties and their representatives or attorneys are expected to be completely candid with the Settlement Judge so that he may properly guide settlement discussions. The failure to be present at a settlement conference or otherwise to comply with the orders of the Settlement Judge or the refusal to cooperate fully within the spirit of this rule may result in the imposition of sanctions under § 2200.101.

(3) *Confidentiality of settlement proceedings*. All statements made and all information presented during the course of settlement proceedings under this section shall be regarded as confidential and shall not be divulged outside of these proceedings except with the consent of the parties. The Settlement Judge shall issue appropriate orders to protect confidentiality of settlement proceedings. The Settlement Judge shall not divulge any statements or information presented during private negotiations with a party or his representative during settlement proceedings except with the consent of that party. No evidence of statements or conduct in settlement proceedings under this section within the scope of Federal Rule of Evidence 408, no notes or other material prepared by or maintained by the Settlement Judge in connection with settlement proceedings, and no communications between the Settlement Judge and the Chief Administrative Law Judge in connection with settlement proceedings including the report of the Settlement Judge under paragraph (f) of this section, will be admissible in any subsequent hearing except by stipulation of the parties. Documents disclosed in the settlement proceeding may not be used in litigation unless obtained through appropriate discovery or subpoena. With respect to the Settlement Judge's participation in settlement proceedings, the Settlement Judge shall not discuss the merits of the case with any other person, nor appear as a witness in any hearing of the case.

(e) *Record of settlement proceedings*. No material of any form required to be held confidential under paragraph (d)(3) of this section shall be considered part of the official case record required to be maintained under section 12(g) of the Act, 29 U.S.C. 661(g), nor shall any such material be open to public inspection as required by section 12(g), unless the parties otherwise stipulate. With the exception of an order approving the terms of any partial settlement agreed to between the parties as set forth in paragraph (f)(1) of this section, the Settlement Judge shall not file or cause to be filed in the official case record any material in his possession relating to these settlement proceedings, including but not limited to communications with the Chief Administrative Law Judge and his report under paragraph (f) of this section, unless the parties otherwise stipulate.

(f) *Report of Settlement Judge*. (1) The Settlement Judge shall promptly notify the Chief Administrative Law Judge in writing of the status of the case at the conclusion of the settlement period or such time that he determines further negotiations would be fruitless. If the Settlement Judge has made such a determination and a settlement agreement is not achieved

within 45 days for voluntary settlement proceedings or 60 days for mandatory settlement proceedings, the Settlement Judge shall then advise the Chief Administrative Law Judge in writing. The Chief Administrative Law Judge may then in his discretion allow an additional period of time, not to exceed 30 days, for further proceedings under this section. If at the expiration of the period allotted under this paragraph the Settlement Judge has not approved a full settlement, he shall furnish to the Chief Administrative Law Judge copies of any written stipulations and orders embodying the terms of any partial settlement the parties have reached.

(2) At the termination of the settlement period without a full settlement, the Chief Administrative Law Judge shall promptly assign the case to an Administrative Law Judge other than the Settlement Judge or Chief Administrative Law Judge for appropriate action on the remaining issues. If all the parties, the Settlement Judge and the Chief Administrative Law Judge agree, the Settlement Judge may be retained as the Hearing Judge.

(g) *Non-reviewability*. Notwithstanding the provisions of § 2200.73 regarding interlocutory review, any decision concerning the assignment of any Judge and any decision by the Settlement Judge to terminate settlement proceedings under this section is not subject to review, appeal, or rehearing.

[70 FR 22791, May 3, 2005; 70 FR 25652, May 13, 2005; 74 FR 63987, Dec. 7, 2009]

Subparts I–L [Reserved]

Subpart M—Simplified Proceedings

SOURCE: 60 FR 41809, Aug. 14, 1995, unless otherwise noted.

§ 2200.200 Purpose.

(a) The purpose of the Simplified Proceedings subpart is to provide simplified procedures for resolving contests under the Occupational Safety and Health Act of 1970, so that parties before the Commission may reduce the time and expense of litigation while being assured due process and a hearing that meets the requirements of the Administrative Procedure Act, 5 U.S.C. 554. These procedural rules will be applied to accomplish this purpose.

(b) Procedures under this subpart are simplified in a number of ways. The major differences between these procedures and those provided in subparts A through G of the Commission's rules of procedure are as follows.

(1) Complaints and answers are not required.

(2) Pleadings generally are not required. Early discussions among the parties and the Administrative Law Judge are required to narrow and define the disputes between the parties.

(3) The Secretary is required to provide the employer with certain informational documents early in the proceeding.

(4) Discovery is not permitted except as ordered by the Administrative Law Judge.

(5) Interlocutory appeals are not permitted.

(6) Hearings are less formal. The Federal Rules of Evidence do not apply. Instead of briefs, the parties will argue their case orally before the Judge at the conclusion of the hearing. In many instances, the Judge will render his or her decision from the bench.

[60 FR 41809, Aug. 14, 1995, as amended at 70 FR 22792, May 3, 2005]

§ 2200.201 Application.

The rules in this subpart will govern proceedings before a Judge in a case chosen for Simplified Proceedings under § 2200.203.

[60 FR 41809, Aug. 14, 1995, as amended at 62 FR 14822, Mar. 28, 1997; 62 FR 40934, July 31, 1997; 70 FR 22792, May 3, 2005]

§ 2200.202 Eligibility for Simplified Proceedings.

(a) Those cases selected for Simplified Proceedings will be those that do not involve complex issues of law or fact. Cases appropriate for Simplified Proceedings would generally include those with one or more of the following characteristics:

(1) Relatively few citation items,

(2) An aggregate proposed penalty of not more than $20,000,

(3) No allegation of willfulness or a repeat violation,

(4) Not involving a fatality,

(5) A hearing that is expected to take less than 2 days, or

(6) A small employer whether appearing pro se or represented by counsel.

(b) Those cases with an aggregate proposed penalty of more than $20,000, but not more than $30,000, if otherwise appropriate, may be selected for Simplified Proceedings at the discretion of the Chief Administrative Law Judge.

[62 FR 40934, July 31, 1997, as amended at 70 FR 22792, May 3, 2005; 74 FR 63987, Dec. 7, 2009]

§ 2200.203 Commencing Simplified Proceedings.

(a) *Selection*. Upon receipt of a Notice of Contest, the Chief Administrative Law Judge may, at his or her discretion, assign an appropriate case for Simplified Proceedings.

(b) *Party request*. Within 20 days of the notice of docketing, any party may request that the case be assigned for Simplified Proceedings. The request must be in writing. For example, ''I request Simplified Proceedings'' will suffice. The request must be sent to the Executive Secretary. Copies must be sent to each of the other parties.

(c) *Judge's ruling on request*. The Chief Administrative Law Judge or the Judge assigned to the case may grant a party's request and assign a case for Simplified Proceedings at his or her discretion. Such request shall be acted upon within 15 days of its receipt by the Judge.

(d) *Time for filing complaint or answer under § 2200.34*. If a party has requested Simplified Proceedings or the Judge has assigned the case for Simplified Proceedings, the times for filing a complaint or answer will not run. If a request for Simplified Proceedings is denied, the period for filing a complaint or answer will begin to run upon issuance of the notice denying Simplified Proceedings.

[60 FR 41809, Aug. 14, 1995, as amended at 62 FR 61012, Nov. 14, 1997; 70 FR 22792, May 3, 2005; 74 FR 63987, Dec. 7, 2009]

§ 2200.204 Discontinuance of Simplified Proceedings.

(a) *Procedure*. If it becomes apparent at any time that a case is not appropriate for Simplified Proceedings, the Judge assigned to the case may, upon motion by any party or upon the Judge's own motion, discontinue Simplified Proceedings and order the case to continue under conventional rules. Before discontinuing Simplified Proceedings, the Judge will consult with the Chief Administrative Law Judge.

(b) *Party motion*. At any time during the proceedings any party may request that Simplified Proceedings be discontinued and that the matter continue under conventional procedures. A motion to discontinue must be in writing and explain why the case is inappropriate for Simplified Proceedings. All other parties will have 7 days from the filing of the motion to state their agreement or disagreement and their reasons. Joint motions to return a case to conventional proceedings shall be granted by the Judge and do not require a showing of good cause.

(c) *Ruling*. If Simplified Proceedings are discontinued, the Judge may issue such orders as are necessary for an orderly continuation under conventional rules.

[60 FR 41809, Aug. 14, 1995, as amended at 70 FR 22792, May 3, 2005; 74 FR 63987, Dec. 7, 2009]

§ 2200.205 Filing of pleadings.

(a) *Complaint and answer*. Once a case is designated for Simplified Proceedings, the complaint and answer requirements are suspended. If the Secretary has filed a complaint under § 2200.34(a), a response to a petition under § 2200.37(d)(5), or a response to an employee contest under § 2200.38(a), and if Simplified Proceedings have been ordered, no response to these documents will be required.

(b) *Motions*. A primary purpose of Simplified Proceedings is to eliminate, as much as possible, motions and similar documents. A motion will not be viewed favorably if the subject of the motion has not been first discussed among the parties.

[60 FR 41809, Aug. 14, 1995, as amended at 70 FR 22792, May 3, 2005]

§ 2200.206 Disclosure of information.

(a) *Disclosure to employer*. (1) Within 12 working days after a case is designated for Simplified Proceedings, the

Secretary shall provide the employer, free of charge, copies of the narrative (Form OSHA 1–A) and the worksheet (Form OSHA 1–B), or their equivalents.

(2) Within 30 calendar days after a case is designated for Simplified Proceedings, the Secretary shall provide the employer with reproductions of any photographs or videotapes that the Secretary anticipates using at the hearing.

(3) Within 30 calendar days after a case is designated for Simplified Proceedings, the Secretary shall provide to the employer any exculpatory evidence in the Secretary's possession.

(4) The Judge shall act expeditiously on any claim by the employer that the Secretary improperly withheld or redacted any portion of the documents, photographs, or videotapes on the grounds of confidentiality or privilege.

(b) *Disclosure to the Secretary.* Where the employer raises an affirmative defense, the presiding Judge shall order the employer to disclose to the Secretary such documents relevant to the affirmative defense as the Judge deems appropriate.

[60 FR 41809, Aug. 14, 1995, as amended at 62 FR 40934, July 31, 1997; 70 FR 22792, May 3, 2005]

§ 2200.207 Pre-hearing conference.

(a) *When held.* As early as practicable after the employer has received the documents set forth in § 2200.206(a)(1), the presiding Judge will order and conduct a pre-hearing conference. At the discretion of the Judge, the pre-hearing conference may be held in person, or by telephone or electronic means.

(b) *Content.* At the pre-hearing conference, the parties will discuss the following: settlement of the case; the narrowing of issues; an agreed statement of issues and facts; defenses; witnesses and exhibits; motions; and any other pertinent matter. Except under extraordinary circumstances, any affirmative defenses not raised at the pre-hearing conference may not be raised later. At the conclusion of the conference, the Judge will issue an order setting forth any agreements reached by the parties and will specify in the order the issues to be addressed by the parties at the hearing.

[60 FR 41809, Aug. 14, 1995, as amended at 62 FR 40934, July 31, 1997]

§ 2200.208 Discovery.

Discovery, including requests for admissions, will only be allowed under the conditions and time limits set by the Judge.

§ 2200.209 Hearing.

(a) *Procedures.* As soon as practicable after the conclusion of the pre-hearing conference, the Judge will hold a hearing on any issue that remains in dispute. The hearing will be in accordance with subpart E of these rules, except for § 2200.60, 2200.73, and 2200.74 which will not apply.

(b) *Agreements.* At the beginning of the hearing, the Judge will enter into the record all agreements reached by the parties as well as defenses raised during the pre-hearing conference. The parties and the Judge then will attempt to resolve or narrow the remaining issues. The Judge will enter into the record any further agreements reached by the parties.

(c) *Evidence.* The Judge will receive oral, physical, or documentary evidence that is not irrelevant, unduly repetitious or unreliable. Testimony will be given under oath or affirmation. The Federal Rules of Evidence do not apply.

(d) *Reporter.* A reporter will be present at the hearing. An official verbatim transcript of the hearing will be prepared and filed with the Judge. Parties may purchase copies of the transcript from the reporter.

(e) *Oral and written argument.* Each party may present oral argument at the close of the hearing. Post-hearing briefs will not be allowed except by order of the Judge.

(f) *Judge's decision.* Where practicable, the Judge will render his or her decision from the bench. In rendering his or her decision from the bench, the Judge shall state the issues in the case and make clear both his or her findings of fact and conclusions of law on the record. The Judge shall reduce his or her order in the matter to writing and transmit it to the parties as soon as practicable, but no later than 45 days

after the hearing. All relevant transcript paragraphs and pages shall be excerpted and included in the decision. Alternatively, within 45 days of the hearing, the Judge will issue a written decision. The decision will be in accordance with § 2200.90. If additional time is needed, approval of the Chief Administrative Law Judge is required.

(g) *Filing of Judge's decision with the Executive Secretary*. When the Judge issues a written decision, it shall be filed simultaneously with the Commission and the parties. Once the Judge's order is transmitted to the Executive Secretary, § 2200.90(b) applies, with the exception of the 11-day period provided for in rule § 2200.90(b)(2).

[60 FR 41809, Aug. 14, 1995, as amended at 62 FR 40934, July 31, 1997; 73 FR 56492, Sept. 29, 2008; 74 FR 63988, Dec. 7, 2009; 75 FR 18404, Apr. 12, 2010]

§ 2200.210 Review of Judge's decision.

Any party may petition for Commission review of the Judge's decision as provided in § 2200.91. After the issuance of the Judge's written decision or order, the parties may pursue the case following the rules in subpart F.

§ 2200.211 Applicability of subparts A through G.

The provisions of subpart D (except for § 2200.57) and §§ 2200.34, 2200.37(d)(5), 2200.38, 2200.71, 2200.73 and 2200.74 will not apply to Simplified Proceedings. All other rules contained in Subparts A through G of the Commission's rules of procedure will apply when consistent with the rules in this subpart governing Simplified Proceedings.

[60 FR 41809, Aug. 14, 1995, as amended at 70 FR 22792, May 3, 2005]

PART 2201—REGULATIONS IMPLEMENTING THE FREEDOM OF INFORMATION ACT

Sec.

2201.1 Purpose and scope.
2201.2 Description of agency.
2201.3 Delegation of authority and responsibilities.
2201.4 General policy and definitions.
2201.5 Procedure for requesting records.
2201.6 Responses to requests.
2201.7 Fees for copying, searching, and review.
2201.8 Waiver of fees.
2201.9 Appeal of denials.
2201.10 Maintenance of statistics.
APPENDIX A TO PART 2201—SCHEDULE OF FEES

AUTHORITY: 29 U.S.C. 661(g); 5 U.S.C. 552.

SOURCE: 71 FR 56350, Sept. 27, 2006, unless otherwise noted.

§ 2201.1 Purpose and scope.

This part prescribes procedures to obtain information and records of the Occupational Safety and Health Review Commission (OSHRC or Commission) under the Freedom of Information Act (FOIA), 5 U.S.C. 552. It applies only to records or information of the Commission or in the Commission's custody. This part does not affect discovery in adversary proceedings before the Commission. Discovery is governed by the Commission's Rules of Procedure in 29 CFR part 2200, subpart D.

§ 2201.2 Description of agency.

OSHRC adjudicates contested enforcement actions under the Occupational Safety and Health Act of 1970, 29 U.S.C. 651–678. The Commission decides cases after the parties are given an opportunity for a hearing. All hearings are open to the public and are conducted at a place convenient to the parties by an Administrative Law Judge. Any Commissioner may direct that a decision of a Judge be reviewed by the full Commission. The President designates one of the Commissioners as Chairman, who is responsible on behalf of the Commission for the administrative operations of the Commission.

§ 2201.3 Delegation of authority and responsibilities.

(a) The Chairman delegates to the Chief FOIA Officer the authority to act upon all requests for agency records. The Chief FOIA Officer shall, subject to the authority of the Chairman:

(1) Have agency-wide responsibility for efficient and appropriate compliance with this section;

(2) Monitor implementation of the FOIA throughout the agency and keep the Chairman and the Attorney General appropriately informed of the agency's performance in implementing this section;

(3) Recommend to the Chairman such adjustments to agency practices, policies, personnel, and funding as may be necessary to improve implementation of this section;

(4) Review and report to the Attorney General, through the Chairman, at such times and in such formats as the Attorney General may direct, on the agency's performance in implementing this section; and

(5) Facilitate public understanding of the purposes of the statutory exemptions of this section by including concise descriptions of the exemptions in both the agency's FOIA handbook, and the agency's annual report on this section, and by providing an overview, where appropriate, of certain general categories of agency records to which those exemptions apply.

(b) The Chief FOIA Officer shall designate the FOIA Disclosure Officer(s), who shall be responsible for processing FOIA requests.

(c) The Chief FOIA Officer shall designate the FOIA Public Liaison(s), who shall serve as the supervisory official(s) to whom a FOIA requester can raise concerns about the service the FOIA requester has received following an initial response. FOIA Public Liaisons shall be responsible for assisting in reducing delays, increasing transparency and understanding of the status of requests, and assisting in the resolution of disputes.

(d) OSHRC establishes a FOIA Requester Service Center that shall be staffed by the FOIA Disclosure Officer(s) and FOIA Public Liaison(s). The address and telephone number of the FOIA Requester Service Center is 1120 20th Street, NW., 9th Floor, Washington, DC 20036–3457, (202) 606–5700. The FOIA Requester Service Center is available to provide information about the status of a request to the person making the request using the assigned tracking number (as described in § 2201.6(h)), including:

(1) The date on which the agency originally received the request; and

(2) An estimated date on which the agency will complete action on the request.

[71 FR 56350, Sept. 27, 2006, as amended at 75 FR 41371, July 16, 2010]

§ 2201.4 General policy and definitions.

(a) *Non-exempt records available to public.* Except for records and information exempted from disclosure by 5 U.S.C. 552(b) or published in the FEDERAL REGISTER under 5 U.S.C. 552(a)(1), all records of the Commission or in its custody are available to any person who requests them in accordance with § 2201.5(a). Records include any information that would be a record subject to the requirements of 5 U.S.C. 552 when maintained by the Commission in any format, including electronic format. In response to FOIA requests, the Commission will search for records manually or by automated means, except when an automated search would significantly interfere with the operation of the Commission's automated information system.

(b) *Examination of records in cases appealed to courts.* A final order of the Commission may be appealed to a United States Court of Appeals. When this occurs, the Commission may send part or all of the official case file to the court and may retain other parts of the file. Thus, a document in a case may not be available from the Commission but only from the court of appeals. In such a case, the FOIA Disclosure Officer may inform the requester that the request for a particular document should be directed to the court.

(c) *Record availability at the OSHRC e-FOIA Reading Room.* The records of Commission activities are publicly available for inspection and copying, and may be accessed electronically through the Commission's Web site at *http://www.oshrc.gov/foia/foia_reading_room.html.* These records include:

(1) Final decisions, including concurring and dissenting opinions, remand orders, as well as Administrative Law Judge decisions pending OSHRC review, issued as a result of adjudication of cases;

(2) OSHRC Rules of Procedure and Guides to those procedures;

(3) Agency policy statements and interpretations adopted by OSHRC and not published in the FEDERAL REGISTER, if any;

(4) Administrative staff manuals that affect a member of the public, if any;

(5) Copies of records that have been released to a person under the FOIA that, because of the subject matter, the Commission determines have become or are likely to become the subject of subsequent requests for substantially the same records; and

(6) A general index of records referred to under paragraph (c)(5) of this section.

(d) *Record availability at the OSHRC on-site e-FOIA Reading Room.* Any member of the public may, upon request, access OSHRC's e-FOIA Reading Room via a computer terminal at the OSHRC National Office, located at 1120 20th St., NW., 9th Floor, Washington, DC 20036–3457. Such a request must be made in writing to the FOIA Requester Service Center, and indicate a preferred date and time for the requested access. OSHRC reserves the right to arrange a different date and time with the requester, if necessary.

(e) *Definitions.* For purposes of this part:

Commercial use request means a request from or on behalf of a person who seeks information for a use or purpose that furthers his or her commercial, trade, or profit interests, which can include furthering those interests through litigation. The FOIA Disclosure Officer shall determine, whenever reasonably possible, the use to which a requester will put the requested records. When it appears that the requester will put the records to a commercial use, either because of the nature of the request itself or because the FOIA Disclosure Officer has reasonable cause to doubt a requester's stated use, the FOIA Disclosure Officer shall provide the requester a reasonable opportunity to submit further clarification.

Direct costs means those expenses that the Commission actually incurs in searching for and duplicating (and, in the case of commercial use requests, reviewing) records to respond to a FOIA request. Direct costs include, for example, the salary of the employee performing the work (the basic rate of pay for the employee, plus 16 percent of that rate to cover benefits) and the cost of operating duplication machinery. Not included in direct costs are overhead expenses such as the costs of space and heating or lighting of the facility in which the records are kept.

Duplication means the making of a copy of a record, or of the information contained in it, necessary to respond to a FOIA request. Copies can take the form of paper, microform, audiovisual materials, or electronic records (for example, magnetic tape or disk), among others. The FOIA Disclosure Officer shall honor a requester's specified preference of form or format of disclosure if the record is readily reproducible with reasonable efforts in the requested form or format.

Educational institution means a preschool, a public or private elementary or secondary school, an institution of undergraduate higher education, an institution of graduate higher education, an institution of professional education, or an institution of vocational education, that operates a program of scholarly research. To be in this category, a requester must show that the request is authorized by and is made under the auspices of a qualifying institution and that the records are not sought for a commercial use but are sought to further scholarly research.

Exceptional circumstances does not include a delay that results from a predictable agency workload of requests under this section, unless the agency demonstrates reasonable progress in reducing its backlog of pending requests.

Noncommercial scientific institution means an institution that is not operated on a ''commercial'' basis, as that term is defined in this paragraph, and that is operated solely for the purpose of conducting scientific research the results of which are not intended to promote any particular product or industry. To be in this category, a requester must show that the request is authorized by and is made under the auspices of a qualifying institution and that the records are not sought for a commercial use but are sought to further scientific research.

Record means any information that would be an OSHRC record subject to the requirements of the FOIA when maintained by OSHRC in any format, including an electronic format, and any such OSHRC record that is maintained for OSHRC by an entity under

Government contract, for the purposes of records management.

Representative of the news media, or news media requester is any person or entity that gathers information of potential interest to a segment of the public, uses its editorial skills to turn the raw materials into a distinct work, and distributes that work to an audience. For purposes of this definition, the term ''news'' means information that is about current events or that would be of current interest to the public. Examples of news media entities include television or radio stations broadcasting to the public at large and publishers of periodicals (but only in those instances where they can qualify as disseminators of ''news'') who make their products available for purchase or subscription by, or free distribution to, the general public. These examples are not all-inclusive. Moreover, as methods of news delivery evolve (for example the adoption of the electronic dissemination of newspapers through telecommunications services), such alternative media shall be considered to be news-media entities. For ''freelance'' journalists to be regarded as working for a news organization, they must demonstrate a solid basis for expecting publication through that organization. A publication contract would be the clearest proof, but OSHRC shall also look to the past publication record of a requester in making this determination. To be in this category, a requester must not be seeking the requested records for a commercial use. However, a request for records supporting the news-dissemination function of the requester shall not be considered to be for a commercial use.

Review means the examination of a record located in response to a request in order to determine whether any portion of it is exempt from disclosure. It also includes processing any record for disclosure—for example, doing all that is necessary to redact it and prepare it for disclosure. Review costs are recoverable even if a record ultimately is not disclosed. Review time does not include time spent resolving general legal or policy issues regarding the application of exemptions.

Search means the process of looking for and retrieving records or information responsive to a request. It includes page-by-page or line-by-line identification of information within records and also includes reasonable efforts to locate and retrieve information from records maintained in electronic form or format. The FOIA Disclosure Officer shall ensure that searches are done in the most efficient and least expensive manner reasonably possible. For example, the FOIA Disclosure Officer shall not search line-by-line where duplicating an entire document would be quicker and less expensive.

Working day means a regular Federal working day. It does not include Saturdays, Sundays, or Federal legal public holidays.

[71 FR 56350, Sept. 27, 2006, as amended at 75 FR 41371, July 16, 2010]

§ 2201.5 Procedure for requesting records.

(a) *Requests for information.* All requests for information must be made in writing and must be mailed or delivered to the FOIA Disclosure Officer at the address in § 2201.3(d). The words ''Freedom of Information Act Request'' must be printed on the face of the request's envelope or covering as well as the request itself. Requests for information must describe the particular record requested to the fullest extent possible and specify the preferred form or format (including electronic formats) of the response. The Commission shall accommodate requesters as to form or format if the record is readily reproducible in the requested form or format. When requesters do not specify the preferred form or format of the response, the Commission shall respond in the form or format in which the record is most accessible to the Commission.

(b) *Date of receipt.* A request that complies with paragraph (a) of this section is deemed received on the actual date it is received by the Commission. A request that does not comply with paragraph (a) of this section is deemed received when it is actually received by the FOIA Disclosure Officer. For requests that are expected to result in fees exceeding $250, the request shall not be deemed to have been received until the requester is advised of the anticipated costs and the Commission has

received full payment or satisfactory assurance of full payment as provided under § 2201.7(f).

§ 2201.6 Responses to requests.

(a) *Responses within 20 working days.* The FOIA Disclosure Officer will either grant or deny a request for records within 20 working days after receiving the request. The 20-day period shall not be tolled by the agency except in the following cases. In these cases, the agency's receipt of the requester's response to the agency's request for information or clarification ends the tolling period.

(1) The agency may toll the 20-day period once while awaiting information that it has reasonably requested from the requester under this section. The agency may make more than one request to the requester for information not related to issues regarding fee assessment, but can only toll the 20-day period once; or

(2) The agency may toll the 20-day period as many times as are necessary to clarify any issues regarding fee assessment.

(b) *Extensions of response time in unusual circumstances.* In unusual circumstances, the Commission may extend the time limit prescribed in paragraph (a) of this section by not more than 10 working days. The FOIA Disclosure Officer shall notify the requester in writing of the extension, the reasons for the extension and the date on which a determination is expected. ''Unusual circumstances'' exists, but only to the extent reasonably necessary to the proper processing of the particular request, when there is a need to:

(1) Search for and collect the requested records from one of OSHRC's regional offices or off-site storage facilities;

(2) Search for, collect, and appropriately examine a voluminous amount of separate and distinct records that are demanded in a single request; or

(3) Consult, with all practicable speed, with another agency having a substantial interest in the determination of the request.

(c) *Additional extension.* The FOIA Disclosure Officer shall notify the requester in writing when it appears that a request cannot be completed within the allowable time (20 working days plus a 10-working-day extension). In such instances, the requester will be provided an opportunity to limit the scope of the request so that it may be processed in the time limit, or to agree to a reasonable alternative time frame for processing.

(d) *Two-track processing.* To ensure the most equitable treatment possible for all requesters, the Commission will process requests on a first-in, first-out basis using a two-track processing system based upon the estimated time it will take to process the request.

(1) The first track is for requests of simple to moderate complexity that are expected to be completed within 20 working days.

(2) The second track is for requests involving ''unusual circumstances'' that are expected to take between 21 to 30 working days to complete and those that, because of their unusual volume or other complexity, are expected to take more than 30 working days to complete.

(3) A requester should assume, unless otherwise notified by the Commission, that its request is in the first track of processing. The Commission will notify a requester when its request is placed in the second track for processing and that notification will include the estimated time for completion. Should subsequent information substantially change the estimated time to process a request, the requester will be notified in writing. In the case of a request expected to take more than 30 working days for action, a requester may modify the request to allow it to be processed faster or to reduce the cost of processing. Partial responses may be sent to a requester as documents are obtained by the FOIA Disclosure Officer from the supplying offices.

(e) *Expedited processing.* (1) The Commission may place a person's request at the front of the queue for the appropriate track for that request upon receipt of a written request that clearly demonstrates a compelling need for expedited processing. Requesters must provide detailed explanations to support their expedited requests. For purposes of determining expedited processing, the term *compelling need* means:

(i) That a failure to obtain requested records on an expedited basis could reasonably be expected to pose an imminent threat to the life or physical safety of any individual; or

(ii) That a request is made by a person primarily engaged in disseminating information, and that person establishes that there is an urgency to inform the public concerning actual or alleged Federal Government activity.

(2) A person requesting expedited processing must include a statement certifying the compelling need given to be true and correct to the best of his or her knowledge and belief. The certification requirement may be waived by the Commission as a matter of agency discretion.

(3) The FOIA Disclosure Officer will make the initial determination whether to grant or deny a request for expedited processing and will notify a requester within 10 calendar days after receiving the request whether processing will be expedited.

(f) *Content of denial.* When the FOIA Disclosure Officer denies a request for records, either in whole or in part, a request for expedited processing, and/or a request for fee waivers (see § 2201.8), the written notice of the denial shall state the reason for denial, give a reasonable estimate of the volume of matter denied (unless doing so would harm an interest protected by the exemption(s) under which the request was denied), set forth the name and title or position of the person responsible for the denial of the request, and notify the requester of the right to appeal the determination as specified in § 2201.9. A refusal by the FOIA Disclosure Officer to process the request because the requester has not made advance payment or given a satisfactory assurance of full payment required under § 2201.7(f) may be treated as a denial of the request and appealed under § 2201.9.

(g) *Deletions.* The FOIA Disclosure Officer shall provide to the requester in writing a justification for deletions within records. The amount of information deleted from records shall be indicated on the released portion of the record, unless including that indication would harm an interest protected by the exemption under which the deletion is made. If technically feasible, the place in the record where the deletion is made, and the exemption under which the deletion is made, shall be marked.

(h) *Tracking numbers.* The FOIA Disclosure Officer shall assign an individualized tracking number to each request received for processing and provide to each person making a request the tracking number assigned to the request. For any response that will take ten or more days to process, OSHRC will send the requester a postcard indicating the request's receipt date and its assigned tracking number.

(i) *Determining responsive records.* In determining which records are responsive to a request, OSHRC ordinarily will include only records in its possession as of the date it begins its search for them. If any other date is used, OSHRC shall inform the requester of that date.

[71 FR 56350, Sept. 27, 2006, as amended at 75 FR 41372, July 16, 2010]

§ 2201.7 Fees for copying, searching, and review.

(a) *Fees required unless waived.* The FOIA Disclosure Officer shall charge the fees in paragraph (b) of this section unless the fees for a request are less than the threshold amount as provided in OSHRC's fee schedule, in which case no fees shall be charged. See Appendix A. The FOIA Disclosure Officer shall, however, waive the fees in the circumstances stated in § 2201.8.

(b) *Calculation of fees.* Fees for copying, searching and reviewing will be based on the direct costs of these services, including the average hourly salary (base plus DC locality payment), plus 16 percent for benefits, of the following three categories of employees involved in responding to FOIA requests: clerical—based on an average of all employees at GS–9 and below; professional—based on an average of all employees at GS–10 through GS–14; and managerial—based on an average of all employees at GS–15 and above. OSHRC will calculate a schedule of fees based on these direct costs. The schedule of fees under this section appears in Appendix A to this part 2201. A copy of the schedule of fees may also be obtained at no charge from the FOIA Disclosure Officer. See § 2201.3(d).

(1) *Copying fee.* The fee per copy of each page shall be calculated in accordance with the per-page amount established in OSHRC's fee schedule. See Appendix A to this part. For other forms of duplication, direct costs of producing the copy, including operator time, shall be calculated and assessed. Copying fees shall not be charged for the first 100 pages of copies unless the copies are requested for a commercial use. No copying fee shall be charged for educational, scientific, or news media requests if the agency fails to comply with any time limit in § 2201.6, provided that no unusual or exceptional circumstances (as those terms are defined in § 2201.6(b) and § 2201.4(e), respectively) apply to the processing of the request.

(2) *Search fee.* Search fees shall be calculated in accordance with the amounts established in OSHRC's fee schedule. See Appendix A to this part. Commercial requesters shall be charged for all search time, except as described below. Search fees shall be charged even if the responsive documents are not located or if they are located but withheld on the basis of an exemption. However, search fees shall be limited or not charged as follows:

(i) *Easily identifiable decisions.* Search fees shall not be charged for searching for decisions that the requester identifies by name and date, or by docket number, or that are otherwise easily identifiable.

(ii) *Educational, scientific or news media requests.* No fee shall be charged if the request is not for a commercial use and is by an educational or scientific institution, whose purpose is scholarly or scientific research, or by a representative of the news media.

(iii) *Other non-commercial requests.* No fee shall be charged for the first two hours of searching if the request is not for a commercial use and is not by an educational or scientific institution, or a representative of the news media.

(iv) *Requests for records about self.* No fee shall be charged to search for records filed in the Commission's systems of records if the requester is the subject of the requested records. See the Privacy Act of 1974, 5 U.S.C. 552a(f)(5) (fees to be charged only for copying).

(v) *Failure to comply with time limits.* No search fee shall be charged if the agency fails to comply with any time limit in § 2201.6, provided that no unusual or exceptional circumstances (as those terms are defined in § 2201.6(b) and § 2201.4(e), respectively) apply to the processing of the request.

(3) *Review fee.* A review fee shall be charged only for commercial requests. Review fees shall be calculated in accordance with the amounts established in OSHRC's schedule of fees. See Appendix A. A review fee shall be charged for the initial examination of documents located in response to a request to determine if it may be withheld from disclosure, and for the excision of withholdable portions. However, a review fee shall not be charged for review by the Chairman under § 2201.9 (Appeal of denials).

(c) *Invoices.* The FOIA Disclosure Officer shall provide the requester with an invoice containing an itemization of assessed fees.

(d) *Aggregation of requests.* When the FOIA Disclosure Officer reasonably believes that a requester, or a group of requesters acting in concert, is attempting to break a request into a series of requests for the purpose of evading the assessment of fees, the FOIA Disclosure Officer may aggregate any such requests and charge accordingly.

(e) *Fees likely to exceed $25.* If the total fee charges are likely to exceed $25, the FOIA Disclosure Officer shall notify the requester of the estimated amount of the charges, unless the requester has indicated a willingness to pay fees up to the estimated amount. The notification shall offer the requester an opportunity to confer with the FOIA Disclosure Officer to reformulate the request to meet the requester's needs at a lower cost. In cases in which a requester has been notified that actual or estimated fees amount to more than $25, the request shall not be considered received and further work shall not be done on it until the requester agrees to pay the actual or estimated total fee. Any such agreement shall be memorialized in writing.

(f) *Advance payments.* Advance payment of fees will generally not be required. If, however, charges are likely

to exceed $250, the FOIA Disclosure Officer shall notify the requester of the likely cost and: if the requester has a history of prompt payment of FOIA charges, obtain satisfactory assurance of full payment; or if the requester has no history of payment, require an advance payment of an amount up to the full estimated charge. If the requester has previously failed to pay a fee within 30 days of the date of billing, the FOIA Disclosure Officer shall require the requester to pay the full amount owed plus any interest owed as provided in paragraph (h) of this section or demonstrate that he or she has, in fact, paid the fee, and to make an advance payment of the full amount of the estimated charges before the FOIA Disclosure Officer begins to process the new request or a pending request from that requester.

(g) *Fees for services not required by the Freedom of Information Act*. The Commission has discretion regarding its response to requests for services not required by the FOIA. For example, the FOIA does not require agencies to certify or authenticate responsive documents, nor does it require responsive documents to be sent by express mail. If these services are requested, the FOIA Disclosure Officer shall assess the direct costs of such services.

(h) *Interest on unpaid bills*. The Commission's Office of Administration shall begin assessing interest charges on unpaid bills starting on the thirty-first day after the date the bill was sent. Interest will accrue from the date of billing until the Commission receives full payment. Interest will be at the rate described in 31 U.S.C. 3717.

(i) *Debt collection procedures*. If bills are unpaid 60 days after the mailing of a written notice to the requester, the Commission's Office of Administration may resort to the debt collection procedures set out in the Debt Collection Act of 1982 (Pub. L. 97–365, 96 Stat. 1749), as amended, and its administrative procedures, including the use of consumer reporting agencies, collection agencies, and offset.

[71 FR 56350, Sept. 27, 2006, as amended at 75 FR 41372, July 16, 2010]

§ 2201.8 Waiver of fees.

(a) *General*. The FOIA Disclosure Officer shall waive part or all of the fees assessed under § 2201.7(b) if two conditions are satisfied: Disclosure of the information is in the public interest because it is likely to contribute significantly to public understanding of the operations or activities of the government; and disclosure is not primarily in the commercial interest of the requester. Where the FOIA Disclosure Officer has reasonable cause to doubt the use to which a requester will put the records sought, or where that use is not clear from the request itself, the FOIA Disclosure Officer may seek clarification from the requester before assigning the request to a specific category for fee assessment purposes. The FOIA Disclosure Officer shall afford the requester the opportunity to show that the requester comes within these two conditions. The following factors may be considered in determining whether the two conditions are satisfied:

(1) Whether the subject of the requested records concerns the operations or activities of the government;

(2) Whether the disclosure is likely to contribute significantly to public understanding of government operations or activities;

(3) Whether the requester has a commercial interest that would be furthered by the requested disclosure; and, if so, whether the magnitude of the identified commercial interest of the requester is sufficiently large, in comparison with the public interest in disclosure, that disclosure is primarily in the commercial interest of the requester.

(b) *Partial waiver of fees*. If the two conditions stated in paragraph (a) of this section are met, the FOIA Disclosure Officer will ordinarily waive all fees. In exceptional cases, however, only a partial waiver may be granted if the request for records would impose an exceptional burden or require an exceptional expenditure of Commission resources, and the request for a waiver minimally satisfies the ''public interest'' requirement in paragraph (a) of this section.

§ 2201.9 Appeal of denials.

A denial of a request for records, either in whole or in part, a request for expedited processing, or a request for fee waivers, may be appealed in writing to the Chairman of the Commission within 20 working days of the date of the letter denying an initial request. The Chairman shall act on the appeal under 5 U.S.C. 552(a)(6)(A)(ii) within 20 working days after the receipt of the appeal. If the Chairman wholly or partially upholds the denial of the request, the Chairman shall notify the requesting person that the requester may obtain judicial review of the Chairman's action under 5 U.S.C. 552(a)(4)(B)–(G).

§ 2201.10 Maintenance of statistics.

(a) The FOIA Disclosure Officer shall maintain records of:

(1) The number of determinations made by the agency not to comply with the requests for records made to the agency and the reasons for those determinations;

(2) The number of appeals made by persons, the results of those appeals, and the reason for the action upon each appeal that results in a denial of information;

(3) A complete list of all statutes that the agency used to authorize the withholding of information under 5 U.S.C. 552(b)(3), which exempts information that is specifically exempted from disclosure by other statutes and the number of occasions on which each statute was relied upon;

(4) A description of whether a court has upheld the decision of the agency to withhold information under each of those statutes cited, and a concise description of the scope of any information upheld;

(5) The number of requests for records pending before the agency as of September 30 of the preceding year, and the median and average number of days that these requests had been pending before the agency as of that date;

(6) The number of requests for records received by the agency and the number of requests the agency processed;

(7) The median number of days taken by the agency to process different types of requests, based on the date on which the requests were received by the agency;

(8) The average number of days for the agency to respond to a request beginning on the date on which the request was received by the agency, the median number of days for the agency to respond to such requests, and the range in number of days for the agency to respond to such requests;

(9) Based on the number of business days that have elapsed since each request was originally received by the agency—

(i) The number of requests for records to which the agency has responded with a determination within a period up to and including 20 days, and in 20-day increments up to and including 200 days;

(ii) The number of requests for records to which the agency has responded with a determination within a period greater than 200 days and less than 301 days;

(iii) The number of requests for records to which the agency has responded with a determination within a period greater than 300 days and less than 401 days; and

(iv) The number of requests for records to which the agency has responded with a determination within a period greater than 400 days;

(10) The average number of days for the agency to provide the granted information beginning on the date on which the request was originally filed, the median number of days for the agency to provide the granted information, and the range in number of days for the agency to provide the granted information;

(11) The median and average number of days for the agency to respond to administrative appeals based on the date on which the appeals originally were received by the agency, the highest number of business days taken by the agency to respond to an administrative appeal, and the lowest number of business days taken by the agency to respond to an administrative appeal;

(12) Data on the 10 active requests with the earliest filing dates pending at the agency, including the amount of time that has elapsed since each request was originally received by the agency;

(13) Data on the 10 active administrative appeals with the earliest filing dates pending before the agency as of September 30 of the preceding year, including the number of business days that have elapsed since the requests were originally received by the agency;

(14) The number of expedited review requests that are granted and denied, the average and median number of days for adjudicating expedited review requests, and the number adjudicated within the required 10 days;

(15) The number of fee waiver requests that are granted and denied, and the average and median number of days for adjudicating fee waiver determinations;

(16) The total amount of fees collected by the agency for processing requests;

(17) The number of full-time staff of the agency devoted to the processing of requests for records under this section; and

(18) The total amount expended by the agency for processing these requests.

(b) The FOIA Disclosure Officer shall annually, on or before February 1 of each year, prepare and submit to the Attorney General an annual report covering each of the categories of records to be maintained in accordance with paragraph (a) of this section, for the previous fiscal year. A copy of the report will be available for public inspection and copying at the OSHRC FOIA Reading Room, and a copy will be accessible through OSHRC's Web site at *http://www.oshrc.gov*.

[71 FR 56350, Sept. 27, 2006, as amended at 75 FR 41373, July 16, 2010]

APPENDIX A TO PART 2201—SCHEDULE OF FEES

Type of fee	Amount of fee
Threshold Amount (Amount below which fees will not be assessed).	$10
Search and Review Hourly Fees:	
Clerical (GS–9 and below).	23
Professional (GS–10 through GS 14).	46
Managerial (GS–15 and above).	76
Duplication cost per page	0.25
Computer printout copying fee	0.40
Searches of computerized records.	Actual cost to the Commission, but shall not exceed $300 per hour, including machine time and the cost of the operator and clerical personnel.
Certification Fee	$35 per authenticating affidavit or declaration. (Note: Search and review charges may be assessed in accordance with the rates listed above.)

PART 2202 [RESERVED]

PART 2203—REGULATIONS IMPLEMENTING THE GOVERNMENT IN THE SUNSHINE ACT

Sec.
2203.1 Purpose and scope.
2203.2 Definitions.
2203.3 Public attendance at Commission meetings.
2203.4 Procedures applicable to regularly-scheduled meetings.
2203.5 Procedures applicable to other meetings.
2203.6 Certification by the General Counsel.
2203.7 Transcripts, recordings and minutes of closed meetings.

AUTHORITY: 29 U.S.C. 661(g); 5 U.S.C. 552b(d)(4); 5 U.S.C. 552b(g).

SOURCE: 50 FR 51679, Dec. 19, 1985, unless otherwise noted.

§ 2203.1 Purpose and scope.

This part applies to all meetings of the Occupational Safety and Health Review Commission. Its purpose is to implement the Government in the Sunshine Act, 5 U.S.C. 552b. The rules in this part are intended to open to public observation, to the extent practicable, the meetings of the Commission, while preserving the Commission's ability to fulfill its adjudicatory responsibilities and protecting the rights of individuals.

§ 2203.2 Definitions.

For the purposes of this part:

Expedited closing procedure means the simplified procedures described at 5 U.S.C. 552b(d)(4) for announcing and closing certain agency meetings.

General Counsel means the General Counsel of the Commission, or any other person designated by the General

Counsel to carry out his responsibilities under this part.

Meeting means the deliberations of at least two Commissioners, where such deliberations determine or result in the joint conduct or disposition of ''official Commission business.'' A conference telephone call among the Commissioners is a *meeting* if it otherwise qualifies as a *meeting* under this paragraph. The term does not include:

(a) The deliberations required or permitted under §§ 2203.4(d) and 2203.5, e.g., a discussion of whether to open or close a meeting under this part;

(b) Business that is conducted by circulating written materials sequentially among the Commissioners for their consideration on an individual basis;

(c) A gathering at which the Chairman of the Commission seeks the advice of the other Commissioners on the carrying out of a function that has been vested in the Chairman, by statute or otherwise; or

(d) Informal discussions of the Commissioners that clarify issues and expose varying views but do not effectively predetermine official actions.

Official Commission business means matters that are the responsibility of the Commission acting as a collegial body, including the adjudication of litigated cases. The term does not include matters that are the responsibility of the Commission's Chairman. See, e.g., 29 U.S.C. 661(e).

Regularly-scheduled meetings means meetings of the Commission that are held at 10:30 a.m. on Thursday of each week, except on legal holidays. The term includes regularly-scheduled meetings that have been rescheduled for another time or day.

[50 FR 51679, Dec. 19, 1985, as amended at 73 FR 56492, Sept. 29, 2008; 74 FR 63988, Dec. 7, 2009]

§ 2203.3 Public attendance at Commission meetings.

(a) *Policy*. Commissioners will not jointly conduct or dispose of official Commission business in a meeting unless it is conducted in accordance with this part. Because the Commission was created for the purpose of adjudicating litigated cases, it can be expected that most of its meetings will be closed to the public. However, meetings that do not involve Commission adjudication or discussion of issues in cases before it will be open to the extent practicable. The public will not be allowed to participate in discussions during open meetings.

(b) *Grounds for closing meetings*. Except where the Commission finds that the public interest requires otherwise, all or part of a meeting may be closed to the public, and information about a meeting may be withheld from the public, where the Commission determines that the meeting, or part of the meeting, or information about the meeting, is likely to:

(1) Disclose matters that are:

(i) Specifically authorized under criteria established by an Executive order to be kept secret in the interests of national defense or foreign policy and

(ii) In fact properly classified pursuant to such Executive order;

(2) Relate solely to the internal personnel rules and practices of the Commission;

(3) Disclose matters specifically exempted from disclosure by statute (other than section 552 of title 5), provided that such statute

(i) Requires that the matter be withheld from the public in such a manner as to leave no discretion on the issue, or

(ii) Establishes particular criteria for withholding or refers to particular types of matters to be withheld;

(4) Disclose trade secrets and commercial or financial information obtained from a person that are privileged or confidential;

(5) Involve accusing any person of a crime, or formally censuring any person;

(6) Disclose information of a personal nature where disclosure would constitute a clearly unwarranted invasion of personal privacy;

(7) Disclose investigatory records compiled for law enforcement purposes, or information which if written would be contained in such records, but only to the extent that the production of such records or information would:

(i) Interfere with enforcement proceedings,

(ii) Deprive a person of a right to a fair trial or an impartial adjudication,

(iii) Constitute an unwarranted invasion of personal privacy,

(iv) Disclose the identity of a confidential source and, in the case of a record compiled by a criminal law enforcement authority in the course of a criminal investigation, or by an agency conducting a lawful national security intelligence investigation, confidential information furnished only by the confidential source,

(v) Disclose investigative techniques and procedures, or

(vi) Endanger the life or physical safety of law enforcement personnel;

(8) Disclose information contained in or related to examination, operating, or condition reports prepared by, on behalf of, or for the use of an agency responsible for the regulation or supervision of financial institutions;

(9) Disclose information the premature disclosure of which would:

(i) Be likely to (A) lead to significant financial speculation in currencies, securities, or commodities, or (B) significantly endanger the stability of any financial institution, or

(ii) Be likely to significantly frustrate implementation of a proposed Commission action, except where the Commission has already disclosed to the public the content or nature of its proposed action, or where the Commission is required by law to make such disclosure on its own initiative prior to taking final agency action on such proposal; or

(10) Specifically concern the Commission's issuance of a subpoena or the Commission's participation in a civil action or proceeding, an action in a foreign court or international tribunal, or an arbitration, or the initiation, conduct, discussion or disposition by the Commission of a particular case of formal Commission adjudication.

(c) *Regularly-scheduled meetings.* The Commission will hold regularly-scheduled meetings for the purpose of considering matters that may properly be closed to the public under paragraph (b)(4), (8), (9)(i) or (10) of this section, or any combination thereof. Primarily, these meetings will be held for the purpose of considering or disposing of particular cases of formal Commission adjudication. The Commission therefore expects to close all regularly-scheduled meetings. The procedures established in § 2203.4 apply to the public announcement and closing of regularly-scheduled meetings.

(d) *Other Commission meetings.* All other meetings of the Commission will be open to public observation unless the Commission determines that all or part of a meeting is likely to disclose information of the kind set forth in any subparagraph of paragraph (b) of this section. The procedures established in § 2203.5 apply to the public announcement of Commission meetings that are not regularly scheduled and to the total or partial closing of these meetings.

[50 FR 51679, Dec. 19, 1985, as amended at 62 FR 35963, July 3, 1997; 74 FR 63988, Dec. 7, 2009]

§ 2203.4 Procedures applicable to regularly-scheduled meetings.

(a) *Statutory authority to adopt expedited closing procedure.* The Government in the Sunshine Act provides, at 5 U.S.C. 552b(d)(4), that qualified agencies may establish by regulation expedited procedures for announcing and closing certain meetings. Specifically, ''[a]ny agency, a majority of whose meetings may properly be closed to the public pursuant to paragraph (4), (8), (9)(A), or (10) of subsection (c) [of the statute], or any combination thereof, may provide by regulation for the closing of such meetings or portions thereof [through the expedited closing procedure].'' See § 2203.3(b)(4), (8), (9)(i) and (10), which are equivalent to the referenced paragraphs of the statute. The Commission had determined, for the reasons stated in paragraph (b) of this section, that it is qualified to adopt implementing regulations under 5 U.S.C. 552b(d)(4). It hereby announces that it will follow the expedited closing procedure authorized under that statutory provision in conducting its regularly-scheduled meetings.

(b) *Commission qualification to adopt expedited closing procedure.* The Commission has determined that a majority of its meetings may be closed to the public under 5 U.S.C. 552b(c)(10). See § 2203.3(b)(10). The Commission is an adjudicatory agency that has no regulatory functions. It was established to

resolve disputes arising out of enforcement actions brought by the Secretary of Labor under the Occupational Safety and Health Act of 1970, 29 U.S.C. 651–678. *See* 29 U.S.C. 659(c). The Commission's experience under the Government in the Sunshine Act has been that almost all of its meetings have been closed, in whole or in part, under 5 U.S.C. 552b(c)(10) because they involved only formal agency adjudication of specific cases.

(c) *Announcements.* Regularly-scheduled meetings of the Commission will be held at 10:30 a.m. every Thursday, except for legal holidays, in the Hearing Room (Suite 965) of the Commission's national office at One Lafayette Centre, 1120–20th Street NW., Washington, DC 20036–3457. If a regularly-scheduled meeting is scheduled, public announcement of the time, date and place of the meeting will be made at the earliest practicable time by posting a notice in a prominent place at the Commission's national office. If a regularly-scheduled meeting is cancelled, a notice of cancellation will be posted in the same manner. Information about the subject of each regularly-scheduled meeting will be made available in the Office of the General Counsel, telephone number (202) 606–5410, at the earliest practicable time. However, no information that may be withheld under § 2203.3(b) will be made available, and individual items may be added to or deleted from the agenda at any time. Inquiries from the public regarding any regularly-scheduled meeting will be directed to the Office of the General Counsel.

(d) *Voting.* At the beginning of each regularly-scheduled meeting, the Commission will vote on whether to close the meeting. No proxy vote will be permitted and the vote of each Commissioner will be recorded. This record of each Commissioner's vote will be made available to the public at the Commission's national office immediately after the meeting.

[50 FR 51679, Dec. 19, 1985, as amended at 58 FR 26066, Apr. 30, 1993; 73 FR 56492, Sept. 29, 2008]

§ 2203.5 Procedures applicable to other meetings.

(a) *Announcements*—(1) *Meetings announced.* Public announcement will be made of every meeting that is not a regularly-scheduled meeting. This announcement will state the time, place, and subject of the meeting, whether it is to be open or closed, and the name and phone number of the person designated to respond to requests for information about the meeting. The announcement will be made at least one week before the meeting unless at least two Commissioners determine by a recorded vote that Commission business requires that such meeting be called at an earlier date. In that case, the Commission will make its public announcement at the earliest practicable time.

(2) *Changes announced.* The time or place of a meeting may be changed following the public announcement required by paragraph (a)(1) of this section, but only if public announcement of the change is made at the earliest practicable time. The subject of a meeting, or the determination by the Commission to open or close all or part of a meeting, may also be changed following the public announcement required by paragraph (a)(1) of this section; however, these changes may be made only if:

(i) At least two Commissioners determine by recorded vote that Commission business so requires and that no earlier announcement of the change was possible and

(ii) Public announcement of the change and the vote of each Commissioner on the change is made at the earliest practicable time.

(3) *Form of announcements.* The announcements required under paragraph (a) of this section will be made by posting a notice in a prominent place at the Commission's national office. In addition, immediately following each announcement required by paragraph (a) of this section, notice of the same matters described in the posted notice will also be submitted for publication in the FEDERAL REGISTER.

(b) *Voting*—(1) *Requirement that vote be taken.* Action to close all or part of a meeting that is not regularly scheduled or to withhold information about a

meeting that is not regularly scheduled, under any paragraph of § 2203.3(b), will be taken only when at least two Commissioners vote to take the proposed action.

(2) *Separate votes required.* A separate vote of the Commissioners will be taken with respect to each Commission meeting or each part of a meeting that is proposed to be closed under paragraph (b) of this section or with respect to any information that is proposed to be withheld under paragraph (b) of this section.

(3) *Single vote on a series of meetings.* A single vote may be taken with respect to closing all or part of a series of meetings under paragraph (b) of this section, or with respect to any information concerning a series of meetings, so long as each meeting in the series involves the same particular matters and is scheduled to be held no more than 30 days after the initial meeting in the series.

(4) *Public requests to close meetings.* Any person whose interest may be directly affected by a portion of an open meeting may request that the Commission close that portion to the public for any of the reasons referred to in paragraph (b)(5), (6) or (7) of § 2203.3. Upon the motion of any Commissioner, the Commission will vote by recorded vote whether to grant the request.

(5) *Proxy votes; recording of votes.* No proxy vote will be permitted for any vote required under paragraph (b) of this section. The vote of each participating Commissioner will be recorded.

(6) *Public announcement of votes.* Within one day after any vote taken under paragraph (b) of this section, the vote of each Commissioner on the question will be made publicly available at the Commission's national office. If any part of a meeting is to be closed under paragraph (b) of this section, a full written explanation of the Commission's action, together with a list of all persons expected to attend the meeting and their affiliation, will be made publicly available at the Commission's national office within one day after the vote to close.

§ 2203.6 Certification by the General Counsel.

For every meeting closed under any provision of these rules, the General Counsel will be asked to certify before the meeting that in his opinion the meeting may properly be closed to the public, and to state which exemptions he has relied upon. A copy of this certification, together with a statement (from the Commissioner presiding over the meeting) setting forth the time and place of the meeting and the persons present, shall be retained by the Commission as part of the transcript, recording or minutes of the meeting described in § 2203.7.

§ 2203.7 Transcripts, recordings and minutes of closed meetings.

(a) *Record of meeting.* The Commission will make a complete transcript or electronic recording adequate to record fully the proceedings of each meeting, or portion of a meeting, closed to the public. However, if all or part of a meeting is closed under paragraph (b)(8), (9)(i) or (10) of § 2203.3, the Commission shall maintain either such a transcript or recording, or a set of minutes. Such minutes will fully and clearly describe all matters discussed and will provide a full and accurate summary of any actions taken, and the reasons for the actions. The minutes will also include a description of each of the views expressed on any item and a record of any roll call vote (reflecting the vote of each Commissioner on the question). In addition, the minutes will identify all documents considered in connection with any action.

(b) *Public access to records.* The Commission will make promptly available to the public, at its national office, the transcript, electronic recording, or minutes of the discussion of any item on the agenda, or of any testimony of any witness received at the meeting, except for such item or items of such discussion or testimony as the Commission determines to contain information which may be withheld under § 2203.3(b). Copies of the transcript, the minutes, or a transcription of the recording disclosing the identity of each speaker, with the deletions noted in the preceding sentence, will be furnished to any person at the actual cost

of duplication or transcription. Requests to inspect or to have copies made of any transcript, electronic recording or set of minutes of any meeting, or any item(s) on the agenda of any meeting, should be made in writing to the General Counsel at the Office of the General Counsel, Occupational Safety and Health Review Commission, Room 941, One Lafayette Centre, 1120–20th Street NW., Washington, DC 20036–3457. The request should identify the time, date, and place of the meeting and briefly describe the items sought. The Commission will maintain a complete verbatim copy of the transcript, a complete copy of the minutes, or a complete electronic recording of each closed meeting, or closed portion of a meeting, for a period of at least two years after the meeting, or until one year after the conclusion of any Commission proceeding with respect to which all or part of the meeting was held, whichever occurs later.

[50 FR 51679, Dec. 19, 1985, as amended at 58 FR 26066, Apr. 30, 1993; 73 FR 56492, Sept. 29, 2008]

PART 2204—IMPLEMENTATION OF THE EQUAL ACCESS TO JUSTICE ACT IN PROCEEDINGS BEFORE THE OCCUPATIONAL SAFETY AND HEALTH REVIEW COMMISSION

Subpart A—General Provisions

Sec.
2204.101 Purpose of these rules.
2204.102 Definitions.
2204.103 When the EAJA applies.
2204.104 Proceedings covered.
2204.105 Eligibility of applicants.
2204.106 Standards for awards.
2204.107 Allowable fees and expenses.
2204.108 Delegation of authority.

Subpart B—Information Required From Applicants

2204.201 Contents of application.
2204.202 Net worth exhibit.
2204.203 Documentation of fees and expenses.

Subpart C—Procedures for Considering Applications

2204.301 Filing and service of documents.
2204.302 When an application may be filed.
2204.303 Answer to application.
2204.304 Reply.
2204.305 Comments by other parties.
2204.306 Settlement.
2204.307 Further proceedings.
2204.308 Decision.
2204.309 Commission review.
2204.310 Waiver.
2204.311 Payment of award.

AUTHORITY: Sec. 203(a)(1), Pub. L. 96–481, 94 Stat. 2325 (5 U.S.C. 504(c)(1)); Pub. L. 99–80, 99 Stat. 183.

SOURCE: 46 FR 48080, Sept. 30, 1981, unless otherwise noted.

EDITORIAL NOTE: Nomenclature changes to part 2204 appear at 62 FR 59569, Nov. 4, 1997.

Subpart A—General Provisions

§ 2204.101 Purpose of these rules.

The Equal Access to Justice Act, 5 U.S.C. 504, provides for the award of attorney or agent fees and other expenses to eligible individuals and entities who are parties to certain administrative proceedings (called ''adversary adjudications'') before the Occupational Safety and Health Review Commission. An eligible party may receive an award when it prevails over the Secretary of Labor, unless the Secretary's position in the proceeding was substantially justified or special circumstances make an award unjust. The rules in this part describe the parties eligible for awards and the proceedings that are covered. They also explain how to apply for awards and the procedures and standards that the Commission uses to make awards.

[46 FR 48080, Sept. 30, 1981, as amended at 52 FR 5456, Feb. 23, 1987]

§ 2204.102 Definitions.

For the purposes of this part,

(a) The term *agent* means any person other than an attorney who represents a party in a proceeding before the Commission pursuant to § 2200.22;

(b) The term *Commission* means the Occupational Safety and Health Review Commission;

(c) The term *EAJA* means the Equal Access to Justice Act, 5 U.S.C. 504.

(d) The term *judge* means an administrative law judge appointed by the Commission under 29 U.S.C. 661(j);

(e) The term *OSH Act* means the Occupational Safety and Health Act of 1970, 29 U.S.C. 651–678;

(f) The term *Secretary* means the Secretary of Labor.

[46 FR 48080, Sept. 30, 1981, as amended at 52 FR 5456, Feb. 23, 1987; 74 FR 63988, Dec. 7, 2009]

§ 2204.103 When the EAJA applies.

The EAJA applies to adversary adjudications before the Commission pending or commenced on or after August 5, 1985. The EAJA also applies to adversary adjudications commenced on or before October 1, 1984, and finally disposed of before August 5, 1985, if an application for an award of fees and expenses, as described in subpart B of these rules, has been filed with the Commission within 30 days after August 5, 1985.

[52 FR 5456, Feb. 23, 1987]

§ 2204.104 Proceedings covered.

The EAJA applies to adversary adjudications before the Commission. These are adjudications under 5 U.S.C. 554 and 29 U.S.C. 659(c) in which the position of the Secretary is represented by an attorney or other representative. The types of proceedings covered are the following proceedings under section 10(c), 29 U.S.C. 659(c), of the OSH Act:

(a) Contests of citations, notifications, penalties, or abatement periods by an employer;

(b) Contests of abatement periods by an affected employee or authorized employee representative; and

(c) Petitions for modification of the abatement periods by an employer.

§ 2204.105 Eligibility of applicants.

(a) To be eligible for an award of attorney or agent fees and other expenses under the EAJA, the applicant must be a party to the adversary adjudication. The term ''party'' is defined in 5 U.S.C. 551(3). The applicant must show that it satisfies the conditions of eligibility set out in this subpart and subpart B.

(b) The types of eligible applicants are as follows:

(1) The sole owner of an unincorporated business who has a net worth of not more than $7 million, including both personal and business interest, and employs not more than 500 employees;

(2) A charitable or other tax-exempt organization described in section 501(c)(3) of the Internal Revenue Code (26 U.S.C. 501(c)(3)) with not more than 500 employees;

(3) A cooperative association as defined in section 15(a) of the Agricultural Marketing Act (12 U.S.C. 1141j(a)) with not more than 500 employees;

(4) Any other partnership, corporation, association, unit of local government, or public or private organization that has a net worth of not more than $7 million and employs not more than 500 employees; and

(5) An individual with a net worth of not more than $2 million.

(c) For the purpose of eligibility, the net worth and number of employees of an applicant shall be determined as of the date the notice of contest was filed, or, in the case of a petition for modification of abatement period, the date the petition was received by the Commission under § 2200.37(d).

(d) An applicant who owns an unincorporated business shall be considered as an ''individual'' rather than a ''sole owner of an unincorporated business'' only if the issues on which the applicant prevails are related primarily to personal interests rather than business interests.

(e) For the purpose of determining eligibility under the EAJA, the employees of an applicant include all persons who regularly perform services for remuneration for the applicant under the applicant's direction and control. Part-time employees shall be included on a proportional basis.

[46 FR 48080, Sept. 30, 1981, as amended at 52 FR 5456, Feb. 23, 1987; 62 FR 59569, Nov. 4, 1997; 70 FR 22792, May 3, 2005; 74 FR 63988, Dec. 7, 2009]

§ 2204.106 Standards for awards.

(a) A prevailing applicant may receive an award for fees and expenses in connection with a proceeding, or in a discrete substantive portion of the proceedings, unless the position of the Secretary was substantially justified. The position of the Secretary includes, in addition to the position taken by the Secretary in the adversary adjudication, the action or failure to act by the Secretary upon which the adversary adjudication is based. The burden

of persuasion that an award should not be made to an eligible prevailing applicant because the Secretary's position was substantially justified is on the Secretary.

(b) An award shall be reduced or denied if the applicant has unduly or unreasonably protracted the proceeding. An award shall be denied if special circumstances make an award unjust.

[46 FR 48080, Sept. 30, 1981, as amended at 52 FR 5456, Feb. 23, 1987]

§ 2204.107 Allowable fees and expenses.

(a) Awards shall be based on rates customarily charged by persons engaged in the business of acting as attorneys, agents and expert witnesses, even if the services were made available without charge or at a reduced rate to the applicant.

(b) An award for the fee of an attorney or agent under these rules shall not exceed $125 per hour, unless the Commission determines by regulation that an increase in the cost of living or a special factor, such as the limited availability of qualified attorneys or agents for Commission proceedings, justifies a higher fee. An award to compensate an expert witness shall not exceed the highest rate at which the Secretary pays expert witnesses. However, an award may include the reasonable expenses of the attorney, agent or witness as a separate item, if the attorney, agent or witness ordinarily charges clients separately for such expenses.

(c) In determining the reasonableness of the fee sought for an attorney, agent or expert witness, the Commission shall consider the following:

(1) If the attorney, agent, or witness is in private practice, his or her customary fee for similar services, or, if an employee of the applicant, the fully allocated cost of the services;

(2) The prevailing rate for similar services in the community in which the attorney, agent, or witness ordinarily perform services;

(3) The time actually spent in the representation of the applicant;

(4) The time reasonably spent in light of the difficulty or complexity of the issues in the proceeding; and

(5) Such other factors as may bear on the value of the services provided.

(d) The reasonable cost of any study, analysis, engineering report, test, project or similar matter prepared on behalf of a party may be awarded, to the extent that the charge for the service does not exceed the prevailing rate for similar services, and the study or other matter was necessary for preparation of the applicant's case.

[46 FR 48080, Sept. 30, 1981, as amended at 62 FR 35964, July 3, 1997]

§ 2204.108 Delegation of authority.

The Commission delegates to each judge authority to entertain and, subject to § 2204.309, take final action on applications for an award of fees and expenses arising from the OSH Act cases that are assigned to the judge under section 12(j) of the OSH Act, 29 U.S.C. 661(j). However, the Commission retains its right to consider an application for an award of fees and expenses without assignment to a judge or to assign such an application to a judge other than the one to whom the underlying OSH Act case is assigned. When entertaining an application for an award of fees and expenses pursuant to this section, each judge is authorized to take any action that the Commission may take under this part, with the exception of actions provided in §§ 2204.309 and 2204.310.

[46 FR 48080, Sept. 30, 1981, as amended at 74 FR 63988, Dec. 7, 2009]

Subpart B—Information Required From Applicants

§ 2204.201 Contents of application.

(a) An application for an award of fees and expenses under the EAJA shall identify the applicant and the proceeding for which an award is sought. The application shall show that the applicant has prevailed and identify the position of the Secretary that the applicant alleges was not substantially justified. The application also shall state the number of employees of the applicant and describe briefly the type and purpose of its organization or business.

(b) The application also shall include a statement that the applicant's net

worth does not exceed $2 million (if an individual) or $7 million (for all other applicants). However, an applicant may omit this statement if :

(1) It attaches a copy of a ruling by the Internal Revenue Service that it qualifies as an organization described in section 501(c)(3) of the Internal Revenue Code (26 U.S.C. 501(c)(3)) or, in the case of a tax-exempt organization not required to obtain a ruling from the Internal Revenue Service on its exempt status, a statement that describes the basis for the applicant's belief that it qualifies under such section; or

(2) It states that it is a cooperative association as defined in section 15(a) of the Agricultural Marketing Act (12 U.S.C. 1141j(a)).

(c) The application shall state the amount of fees and expenses for which an award is sought.

(d) The application also may include any other matters that the applicant wishes the Commission to consider in determining whether and in what amount an award should be made.

(e) The application shall be signed by the applicant or an authorized officer or attorney of the applicant. It also shall contain or be accompanied by a written verification under oath or under penalty of perjury that the information provided in the application is true.

[46 FR 48080, Sept. 30, 1981, as amended at 52 FR 5456, Feb. 23, 1987]

§ 2204.202 Net worth exhibit.

(a) Each applicant except a qualified tax-exempt organization or cooperative association shall provide with its application a detailed exhibit showing the net worth of the applicant as of the date specified by § 2204.105(c). The exhibit may be in any form convenient to the applicant that provides full disclosure of the applicant's assets and liabilities and is sufficient to determine whether the applicant qualifies under the standards in this part. The Commission may require an applicant to file additional information to determine its eligibility for an award.

(b)(1) The net worth exhibit shall be included in the public record of the proceeding except as provided in paragraph (b)(2) of this section.

(2) An applicant that objects to public disclosure of information in any portion of the exhibit and believes there are legal grounds for withholding it from disclosure may submit that portion of the exhibit in a sealed envelope labeled ''Confidential Information,'' accompanied by a motion to withhold the information from public disclosure. The motion shall describe the information sought to be withheld and explain, in detail, why it falls within one or more of the specific exemptions from mandatory disclosure under the Freedom of Information Act, 5 U.S.C. 552(b)(1)–(9), why public disclosure of the information would adversely affect the applicant, and why disclosure is not required in the public interest. The material in question shall be served on the Secretary but need not be served on any other party to the proceeding. If the Commission finds that the information should not be withheld from disclosure, it shall be placed in the public record of the proceeding. Otherwise, any request to inspect or copy the exhibit shall be disposed of in accordance with the Commission's procedures under the Freedom of Information Act, part 2201.

§ 2204.203 Documentation of fees and expenses.

The application shall be accompanied by full documentation of the fees and expenses, including the cost of any study, analysis, engineering report, test, project or similar matter, for which an award is sought. A separate itemized statement shall be submitted for each professional firm or individual whose services are covered by the application, showing the hours spent in connection with the proceeding by each individual, a description of the specific services performed, the rate at which each fee has been computed, any expenses for which reimbursement is sought, the total amount claimed, and the total amount paid or payable by the applicant or by any other person or entity for the services provided. The Commission may require the applicant to provide vouchers, receipts, or other substantiation for any fees or expenses claimed.

[46 FR 48080, Sept. 30, 1981, as amended at 52 FR 5457, Feb. 23, 1987]

Subpart C—Procedures for Considering Applications

§ 2204.301 Filing and service of documents.

An EAJA application is deemed to be filed only when received by the Commission. In all other respects, an application for an award and any other pleading or document related to an application shall be filed and served on all parties to the proceeding in accordance with §§ 2200.7 and 2200.8, except as provided in § 2204.202(b) for confidential financial information.

[62 FR 35964, July 3, 1997]

§ 2204.302 When an application may be filed.

(a) An application may be filed whenever an applicant has prevailed in a proceeding or in a discrete substantive portion of the proceeding, but in no case later than thirty days after the period for seeking appellate review expires.

(b) If Commission review is sought or directed of a judge's decision as to which an application for a fee award has been filed, proceedings concerning the award of fees shall be stayed until there is a final Commission disposition of the case and the period for seeking review in a court of appeals expires.

(c) If review of a Commission decision, or any item or items contained in that decision, is sought in the court of appeals under section 11 of the OSH Act, 29 U.S.C. 660, an application for an award filed with the Commission with regard to that decision shall be dismissed under 5 U.S.C. 554(c)(1) as to the item or items of which review is sought. If the petition for review in the court of appeals is thereafter withdrawn, the applicant may reinstate its application before the Commission within thirty days of the withdrawal.

[46 FR 48080, Sept. 30, 1981, as amended at 70 FR 22792, May 3, 2005]

§ 2204.303 Answer to application.

(a) Within 30 days after service of an application, the Secretary shall file an answer to the application.

(b) If the Secretary and the applicant believe that the issues in the fee application can be settled, they may jointly file a statement of their intent to negotiate a settlement. The filing of this statement shall extend the time for filing an answer for an additional 30 days, and further extensions may be granted upon request.

(c) The answer shall explain in detail any objections to the award requested and identify the facts relied on in support of the Secretary's position. If the answer is based on any alleged facts not already in the record of the proceeding, the Secretary shall include with the answer either supporting affidavits or a request for further proceedings under § 2204.307.

§ 2204.304 Reply.

Within 15 days after service of an answer, the applicant may file a reply. If the reply is based on any alleged facts not already in the record of the proceeding, the applicant shall include with the reply either supporting affidavits or a request for further proceedings under § 2204.307.

§ 2204.305 Comments by other parties.

Any party to a proceeding other than the applicant and the Secretary may file comments on an application within 30 days after it is served or on an answer within 15 days after it is served. A commenting party may not participate further in proceedings on the application unless the Commission determines that the public interest requires such participation in order to permit full exploration of matters raised in the comments.

§ 2204.306 Settlement.

The applicant and the Secretary may agree on a proposed settlement of the award before final action on the application, either in connection with a settlement of the underlying proceeding, or after the underlying proceeding has been concluded. If a prevailing party and the Secretary agree on a proposed settlement of an award before an application has been filed, the application shall be filed with the proposed settlement.

§ 2204.307 Further proceedings.

(a)(1) The determination of an award shall be made on the basis of the record made during the proceeding for which

fees and expenses are sought, except as provided in paragraphs (a)(2) and (a)(3) of this section.

(2) On the motion of a party or on the judge's own initiative, the judge may order further proceedings, including discovery and an evidentiary hearing, as to issues other than substantial justification (such as the applicant's eligibility or substantiation of fees and expenses).

(3) If the proceeding for which fees and expenses are sought ended before the Secretary had an opportunity to introduce evidence supporting the citation or notification of proposed penalty (for example, a citation was withdrawn or settled before an evidentiary hearing was held), the Secretary may supplement the record with affidavits or other documentary evidence of substantial justification.

(b) A request that the judge order further proceedings under this section shall specifically identify the information sought or the disputed issues and shall explain why the additional proceedings are necessary to resolve the issues.

[46 FR 48080, Sept. 30, 1981, as amended at 52 FR 5457, Feb. 23, 1987]

§ 2204.308 Decision.

The preparation and issuance of decision shall be in accordance with § 2200.90. Additionally, the judge's decision shall include written findings and conclusions on the applicant's eligibility and status as a prevailing party and an explanation of the reasons for any difference between the amount requested and the amount awarded. The decision shall also include, if at issue, findings on whether the Secretary's position was substantially justified, whether the applicant unduly protracted the proceedings, or whether special circumstances make an award unjust.

§ 2204.309 Commission review.

Commission review shall be in accordance with §§ 2200.91 and 2200.92. The applicant, the Secretary, or both may seek review of the judge's decision on the fee application, and the Commission may grant such petitions for review or direct review of the decision on the Commission's own initiative. The Commission delegates to each of its members the authority to order review of a judge's decision concerning a fee application. Whether to review a decision is a matter within the discretion of each member of the Commission. If the Commission does not direct review, the judge's decision on the application shall become a final decision of the Commission 30 days after it is received and docketed by the Executive Secretary of the Commission. If review is directed, the Commission shall issue a final decision on the application or remand the application to the judge for further proceedings.

§ 2204.310 Waiver.

After reasonable notice to the parties, the Commission may waive, for good cause shown, any provision contained in this part as long as the waiver is consistent with the terms and purpose of the EAJA.

§ 2204.311 Payment of award.

An applicant seeking payment of an award shall submit to the officer designated by the Secretary a copy of the Commission's final decision granting the award.

PART 2205—ENFORCEMENT OF NONDISCRIMINATION ON THE BASIS OF DISABILITY IN PROGRAMS OR ACTIVITIES CONDUCTED BY THE OCCUPATIONAL SAFETY AND HEALTH REVIEW COMMISSION AND IN ACCESSIBILITY OF COMMISSION ELECTRONIC AND INFORMATION TECHNOLOGY

Sec.

2205.101 Purpose.
2205.102 Application.
2205.103 Definitions.
2205.104–2205.10 [Reserved]
2205.111 Notice.
2205.112–2205.129 [Reserved]
2205.130 General prohibitions against discrimination.
2205.131–2205.134 [Reserved]
2205.135 Electronic and information technology requirements.
2205.136–2205.139 [Reserved]
2205.140 Employment.
2205.141–2205.148 [Reserved]
2205.149 Program accessibility: Discrimination prohibited.

2205.150 Program accessibility: Existing facilities.
2205.151 Program accessibility: New construction and alterations.
2205.152–2205.159 [Reserved]
2205.160 Communications.
2205.161–2205.169 [Reserved]
2205.170 Compliance procedures.
2205.171–2205.999 [Reserved]

AUTHORITY: 29 U.S.C. 794; 29 U.S.C. 794d.

SOURCE: 76 FR 39285, July 6, 2011, unless otherwise noted.

§ 2205.101 Purpose.

This part effectuates section 119 of the Rehabilitation, Comprehensive Services, and Developmental Disabilities Amendments of 1978, which amended section 504 of the Rehabilitation Act of 1973 to prohibit discrimination on the basis of disability in programs or activities conducted by Executive agencies or the United States Postal Service. This part also effectuates section 508 of the Rehabilitation Act of 1973, as amended, with respect to the accessibility of electronic and information technology developed, procured, maintained, or used by the agency.

§ 2205.102 Application.

This part applies to all programs or activities conducted by the agency and to its development, procurement, maintenance, and use of electronic and information technology.

§ 2205.103 Definitions.

For purposes of this part, the term—

Assistant Attorney General means the Assistant Attorney General, Civil Rights Division, United States Department of Justice.

Auxiliary aids means services or devices that enable persons with impaired sensory, manual, or speaking skills to have an equal opportunity to participate in, and enjoy the benefits of, programs or activities conducted by the agency. For example, auxiliary aids useful for persons with impaired vision include readers, brailled materials, audio recordings, telecommunications devices and other similar services and devices. Auxiliary aids useful for persons with impaired hearing include telephone handset amplifiers, telephones compatible with hearing aids, telecommunication devices for deaf persons (TDD's), interpreters, notetakers, written materials, and other similar services and devices.

Complete complaint means a written statement that contains the complainant's name and address and describes the agency's alleged discriminatory action in sufficient detail to inform the agency of the nature and date of the alleged violation of section 504 or section 508. It shall be signed by the complainant or by someone authorized to do so on his or her behalf. Complaints filed on behalf of classes or third parties shall describe or identify (by name, if possible) the alleged victims of discrimination.

Electronic and Information technology includes information technology and any equipment or interconnected system or subsystem of equipment that is used in the creation, conversion, or duplication of data or information. The term electronic and information technology includes, but is not limited to, telecommunications products (such as telephones), information kiosks and transaction machines, World Wide Web sites, multimedia, and office equipment such as copiers and fax machines. The term does not include any equipment that contains embedded information technology that is used as an integral part of the product, but the principal function of which is not the acquisition, storage, manipulation, management, movement, control, display, switching, interchange, transmission, or reception of data or information. For example, HVAC (heating, ventilation, and air conditioning) equipment such as thermostats or temperature control devices, and medical equipment where information technology is integral to its operation are not information technology.

Facility means all or any portion of buildings, structures, equipment, roads, walks, parking lots, rolling stock or other conveyances, or other real or personal property.

Historic preservation programs means programs conducted by the agency that have preservation of historic properties as a primary purpose.

Historic properties means those properties that are listed or eligible for

listing in the National Register of Historic Places or properties designated as historic under a statute of the appropriate State or local government body.

Individual with a disability means any person who has a physical or mental impairment that substantially limits one or more major life activities, has a record of such an impairment, or is regarded as having such an impairment. As used in this definition, the phrase:

(1) *Physical or mental impairment* includes—

(i) Any physiological disorder or condition, cosmetic disfigurement, or anatomical loss affecting one or more of the following body systems: Neurological; musculoskeletal; special sense organs; respiratory, including speech organs; cardiovascular; reproductive; digestive; genitourinary; hemic and lymphatic; skin; and endocrine; or

(ii) Any mental or psychological disorder, such as mental retardation, organic brain syndrome, emotional or mental illness, and specific learning disabilities. The term *physical or mental impairment* includes, but is not limited to, such diseases and conditions as orthopedic, visual, speech, and hearing impairments, cerebral palsy, epilepsy, muscular dystrophy, multiple sclerosis, cancer, heart disease, diabetes, mental retardation, emotional illness, and drug addiction and alcoholism.

(2) *Major life activities* includes functions such as caring for one's self, performing manual tasks, walking, seeing, hearing, speaking, breathing, learning, and working.

(3) *Has a record of such an impairment* means has a history of, or has been misclassified as having, a mental or physical impairment that substantially limits one or more major life activities.

(4) *Is regarded as having an impairment* means—

(i) Has a physical or mental impairment that does not substantially limit major life activities but is treated by the agency as constituting such a limitation;

(ii) Has a physical or mental impairment that substantially limits major life activities only as a result of the attitudes of others toward such impairment; or

(iii) Has none of the impairments defined in subparagraph (1) of this definition but is treated by the agency as having such an impairment.

Information technology means any equipment or interconnected system or subsystem of equipment that is used in the automatic acquisition, storage, manipulation, management, movement, control, display, switching, interchange, transmission, or reception of data or information. The term information technology includes computers, ancillary equipment, software, firmware and similar procedures, services (including support services), and related resources.

Qualified individual with a disability means—

(1) With respect to any agency program or activity under which a person is required to perform services or to achieve a level of accomplishment, an individual with a disability who meets the essential eligibility requirements and who can achieve the purpose of the program or activity without modifications in the program or activity that the agency can demonstrate would result in a fundamental alteration in its nature;

(2) With respect to any other program or activity, an individual with a disability who meets the essential eligibility requirements for participation in, or receipt of benefits from, that program or activity; and

(3) *Qualified individual with a disability* is defined for purposes of employment in 29 CFR 1630.2(m), which is made applicable to this part by § 2205.140.

Section 504 means section 504 of the Rehabilitation Act of 1973 (Pub. L. 93–112, 87 Stat. 394 (29 U.S.C. 794)), as amended by the Rehabilitation Act Amendments of 1974 (Pub. L. 93–516, 88 Stat. 1617); the Rehabilitation, Comprehensive Services, and Developmental Disabilities Amendments of 1978 (Pub. L. 95–602, 92 Stat. 2955); and the Rehabilitation Act Amendments of 1986 (Pub. L. 99–506, 100 Stat. 1810). As used in this part, section 504 applies only to programs or activities conducted by Executive agencies and not to federally assisted programs.

Section 508 means section 508 of the Rehabilitation Act of 1973, Pub. L. 93–

112, Title V, section 508, as added by Pub. L. 99–506, Title VI, section 603(a), Oct. 21, 1986, 100 Stat. 1830, and amended Pub. L. 100–630, Title II, section 206(f), Nov. 7, 1988, 102 Stat. 3312; Pub. L. 102–569, Title V, section 509(a), Oct. 29, 1992, 106 Stat. 4430; Pub. L. 105–220, Title IV, section 408(b), Aug. 7, 1998, 112 Stat. 1203.

Substantial impairment means a significant loss of the integrity of finished materials, design quality, or special character resulting from a permanent alteration.

§§ 2205.104–2205.110 [Reserved]

§ 2205.111 Notice.

The agency shall make available to employees, applicants, participants, beneficiaries, and other interested persons such information regarding the provisions of this part and its applicability to the programs or activities conducted by the agency, and make such information available to them in such manner as the Chairman finds necessary to apprise such persons of the protections against discrimination assured them by section 504 or the access to technology provided under section 508 and this regulation.

§§ 2205.112–2205.129 [Reserved]

§ 2205.130 General prohibitions against discrimination.

(a) No qualified individual with a disability shall, on the basis of disability, be excluded from participation in, be denied the benefits of, or otherwise be subjected to discrimination under any program or activity conducted by the agency.

(b)(1) The agency, in providing any aid, benefit, or service, may not, directly or through contractual, licensing, or other arrangements, on the basis of disability—

(i) Deny a qualified individual with a disability the opportunity to participate in or benefit from the aid, benefit, or service;

(ii) Afford a qualified individual with a disability an opportunity to participate in or benefit from the aid, benefit, or service that is not equal to that afforded others;

(iii) Provide a qualified individual with a disability with an aid, benefit, or service that is not as effective in affording equal opportunity to obtain the same result, to gain the same benefit, or to reach the same level of achievement as that provided to others;

(iv) Provide different or separate aid, benefits, or services to individuals with disabilities or to any class of individuals with disabilities than is provided to others unless such action is necessary to provide qualified individuals with disabilities with aid, benefits, or services that are as effective as those provided to others;

(v) Deny a qualified individual with a disability the opportunity to participate as a member of planning or advisory boards; or

(vi) Otherwise limit a qualified individual with a disability in the enjoyment of any right, privilege, advantage, or opportunity enjoyed by others receiving the aid, benefit, or service.

(2) The agency may not deny a qualified individual with a disability the opportunity to participate in programs or activities that are not separate or different, despite the existence of permissibly separate or different programs or activities.

(3) The agency may not, directly or through contractual or other arrangements, utilize criteria or methods of administration the purpose or effect of which would—

(i) Subject qualified individuals with disabilities to discrimination on the basis of disability; or

(ii) Defeat or substantially impair accomplishment of the objectives of a program or activity with respect to individuals with disabilities.

(4) The agency may not, in determining the site or location of a facility, make selections the purpose or effect of which would—

(i) Exclude individuals with disabilities from, deny them the benefits of, or otherwise subject them to discrimination under any program or activity conducted by the agency; or

(ii) Defeat or substantially impair the accomplishment of the objectives of a program or activity with respect to individuals with disabilities.

(5) The agency, in the selection of procurement contractors, may not use

criteria that subject qualified individuals with disabilities to discrimination on the basis of disability.

(6) The agency may not administer a licensing or certification program in a manner that subjects qualified individuals with disabilities to discrimination on the basis of disability, nor may the agency establish requirements for the programs or activities of licensees or certified entities that subject qualified individuals with disabilities to discrimination on the basis of disability. However, the programs or activities of entities that are licensed or certified by the agency are not, themselves, covered by this part.

(c) The exclusion of individuals without disabilities from the benefits of a program limited by Federal statute or Executive order to individuals with disabilities or the exclusion of a specific class of individuals with disabilities from a program limited by Federal statute or Executive order to a different class of individuals with disabilities is not prohibited by this part.

(d) The agency shall administer programs and activities in the most integrated setting appropriate to the needs of qualified individuals with disabilities.

§§ 2205.131–2205.134 [Reserved]

§ 2205.135 Electronic and information technology requirements.

(a) In accordance with section 508 and the standards published by the Architectural and Transportation Barriers Compliance Board at 36 CFR part 1194, the agency shall ensure, absent an undue burden, that the electronic and information technology developed, procured, maintained, or used by the agency allows:

(1) Individuals with disabilities who are agency employees or applicants to have access to and use of information and data that is comparable to the access to and use of information and data by agency employees who are individuals without disabilities; and

(2) Individuals with disabilities who are members of the public seeking information or services from the agency to have access to and use of information and data that is comparable to the access to and use of information and data by such members of the public who are not individuals with disabilities.

(b) When development, procurement, maintenance, or use of electronic and information technology that meets the standards at 36 CFR part 1194 would impose an undue burden, the agency shall provide individuals with disabilities covered by this section with the information and data involved by an alternative means of access that allows the individuals to use the information and data.

§§ 2205.136–2205.139 [Reserved]

§ 2205.140 Employment.

No qualified individual with a disability shall, on the basis of disability, be subjected to discrimination in employment under any program or activity conducted by the agency. The definitions, requirements, and procedures of section 501 of the Rehabilitation Act of 1973 (29 U.S.C. 791), as established by the Equal Employment Opportunity Commission in 29 CFR part 1614, shall apply to employment in federally conducted programs or activities.

§§ 2205.141–2205.148 [Reserved]

§ 2205.149 Program accessibility: discrimination prohibited.

Except as otherwise provided in § 2205.150, no qualified individual with a disability shall, because the agency's facilities are inaccessible to or unusable by individuals with disabilities, be denied the benefits of, be excluded from participation in, or otherwise be subjected to discrimination under any program or activity conducted by the agency.

§ 2205.150 Program accessibility: existing facilities.

(a) *General.* The agency shall operate each program or activity so that the program or activity, when viewed in its entirety, is readily accessible to and usable by individuals with disabilities. This paragraph (a) does not—

(1) Necessarily require the agency to make each of its existing facilities accessible to and usable by individuals with disabilities;

(2) In the case of historic preservation programs, require the agency to

take any action that would result in a substantial impairment of significant historic features of an historic property; or

(3) Require the agency to take any action that it can demonstrate would result in a fundamental alteration in the nature of a program or activity or in undue financial and administrative burdens. In those circumstances where agency personnel believe that the proposed action would fundamentally alter the program or activity or would result in undue financial and administrative burdens, the agency has the burden of proving that compliance with this paragraph (a) would result in such alteration or burdens. The decision that compliance would result in such alteration or burdens must be made by the Chairman or his or her designee after considering all agency resources available for use in the funding and operation of the conducted program or activity, and must be accompanied by a written statement of the reasons for reaching that conclusion. If an action would result in such an alteration or such burdens, the agency shall take any other action that would not result in such an alteration or such burdens but would nevertheless ensure that individuals with disabilities receive the benefits and services of the program or activity.

(b) *Methods—(1) General.* The agency may comply with the requirements of this section through such means as redesign of equipment, reassignment of services to accessible buildings, assignment of aides to beneficiaries, home visits, delivery of services at alternate accessible sites, alteration of existing facilities and construction of new facilities, use of accessible rolling stock, or any other methods that result in making its programs or activities readily accessible to and usable by individuals with disabilities. The agency is not required to make structural changes in existing facilities where other methods are effective in achieving compliance with this section. The agency, in making alterations to existing buildings, shall meet accessibility requirements to the extent compelled by the Architectural Barriers Act of 1968, as amended (42 U.S.C. 4151–4157), and any regulations implementing it. In choosing among available methods for meeting the requirements of this section, the agency shall give priority to those methods that offer programs and activities to qualified individuals with disabilities in the most integrated setting appropriate.

(2) *Historic preservation programs.* In meeting the requirements of paragraph (a) of this section in historic preservation programs, the agency shall give priority to methods that provide physical access to individuals with disabilities. In cases where a physical alteration to an historic property is not required because of paragraph (a)(2) or (3) of this section, alternative methods of achieving program accessibility include—

(i) Using audio-visual materials and devices to depict those portions of an historic property that cannot otherwise be made accessible;

(ii) Assigning persons to guide individuals with disabilities into or through portions of historic properties that cannot otherwise be made accessible; or

(iii) Adopting other innovative methods.

§ 2205.151 Program accessibility: new construction and alterations.

Each building or part of a building that is constructed or altered by, on behalf of, or for the use of the agency shall be designed, constructed, or altered so as to be readily accessible to and usable by individuals with disabilities. The definitions, requirements, and standards of the Architectural Barriers Act (42 U.S.C. 4151–4157), as established in 41 CFR 102–76.60 to 102–76.95, apply to buildings covered by this section.

§§ 2205.152–2205.159 [Reserved]

§ 2205.160 Communications.

(a) The agency shall take appropriate steps to ensure effective communication with applicants, participants, personnel of other Federal entities, and members of the public.

(1) The agency shall furnish appropriate auxiliary aids where necessary to afford an individual with a disability an equal opportunity to participate in,

and enjoy the benefits of, a program or activity conducted by the agency.

(i) In determining what type of auxiliary aid is necessary, the agency shall give primary consideration to the requests of the individual with a disability.

(ii) The agency need not provide individually prescribed devices, readers for personal use or study, or other devices of a personal nature.

(2) Where the agency communicates with applicants and beneficiaries by telephone, TDD's or equally effective telecommunication systems shall be used.

(b) The agency shall ensure that interested persons, including persons with impaired vision or hearing, can obtain information as to the existence and location of accessible services, activities, and facilities.

(c) The agency shall provide signage at a primary entrance to each of its inaccessible facilities, directing users to a location at which they can obtain information about accessible facilities. The international symbol for accessibility shall be used at each primary entrance of an accessible facility.

(d) This section does not require the agency to take any action that it can demonstrate would result in a fundamental alteration in the nature of a program or activity or in undue financial and administrative burdens. In those circumstances where agency personnel believe that the proposed action would fundamentally alter the program or activity or would result in undue financial and administrative burdens, the agency has the burden of proving that compliance with this section would result in such alteration or burdens. The decision that compliance would result in such alteration or burdens must be made by the Chairman or his or her designee after considering all agency resources available for use in the funding and operation of the conducted program or activity, and must be accompanied by a written statement of the reasons for reaching that conclusion. If an action required to comply with this section would result in such an alteration or such burdens, the agency shall take any other action that would not result in such an alteration or such burdens but would nevertheless ensure that, to the maximum extent possible, individuals with disabilities receive the benefits and services of the program or activity.

§§ 2205.161–2205.169 [Reserved]

§ 2205.170 Compliance procedures.

(a) Except as provided in paragraph (b) of this section, this section applies to all allegations of discrimination on the basis of disability in programs or activities conducted by the agency in violation of section 504. Paragraphs (c) through (j) of this section also apply to all complaints alleging a violation of the agency's responsibility to procure electronic and information technology under section 508, whether filed by members of the public or agency employees or applicants.

(b) The agency shall process complaints alleging violations of section 504 with respect to employment according to the procedures established by the Equal Employment Opportunity Commission in 29 CFR part 1614 pursuant to section 501 of the Rehabilitation Act of 1973 (29 U.S.C. 791).

(c)(1) Any person who believes that he or she has been subjected to discrimination prohibited by this part or that the agency's procurement of electronic and information technology has violated section 508, or an authorized representative of such person, may file a complaint with the Executive Director.

(2) The Executive Director shall be responsible for coordinating implementation of this section. Complaints shall be sent to Executive Director, Occupational Safety and Health Review Commission, One Lafayette Centre, 1120–20th Street NW., 9th Floor, Washington, DC 20036–3457. Complaints shall be filed with the Executive Director within 180 days of the alleged act of discrimination. A complaint shall be deemed filed on the date it is postmarked, or, in the absence of a postmark, on the date it is received by the agency. The agency may extend this time period for good cause.

(d)(1) The agency shall accept a complete complaint that is filed in accordance with paragraph (c) of this section and over which it has jurisdiction. The Executive Director shall notify the

complainant and the respondent of receipt and acceptance of the complaint.

(2) If the agency receives a complaint that is not complete, the Executive Director shall notify the complainant, within 30 days of receipt of the incomplete complaint, that additional information is needed. If the complainant fails to complete the complaint within 30 days of receipt of this notice, the Executive Director shall dismiss the complaint without prejudice and shall so inform the complainant.

(3) If the agency receives a complaint over which it does not have jurisdiction, it shall promptly notify the complainant and shall make reasonable efforts to refer the complaint to the appropriate government entity.

(e) The agency shall notify the Architectural and Transportation Barriers Compliance Board upon receipt of any complaint alleging that a building or facility that is subject to the Architectural Barriers Act of 1968, as amended (42 U.S.C. 4151–4157), or section 502 of the Rehabilitation Act of 1973, as amended (29 U.S.C. 792), is not readily accessible to and usable by individuals with disabilities.

(f) Within 180 days of the receipt of a complete complaint for which it has jurisdiction, the agency shall notify the complainant of the results of the investigation in a letter containing—

(1) Findings of fact and conclusions of law;

(2) A description of a remedy for each violation found; and

(3) A notice of the right to appeal.

(g) Appeals of the findings of fact and conclusions of law or remedies must be filed with the Chairman by the complainant within 90 days of receipt from the agency of the letter required by paragraph (f) of this section. The agency may extend this time for good cause. Appeals shall be sent to the Chairman, Occupational Safety and Health Review Commission, One Lafayette Centre, 1120–20th Street, NW., 9th Floor, Washington, DC 20036–3457. An appeal shall be deemed filed on the date it is postmarked, or, in the absence of a postmark, on the date it is received by the agency. It should be clearly marked ''Appeal of Section 504 decision'' or ''Appeal of Section 508 decision'' and should contain specific objections explaining why the complainant believes the initial decision was factually or legally wrong. Attached to the appeal letter should be a copy of the initial decision being appealed.

(h) Timely appeals shall be accepted and decided by the Chairman. The Chairman shall notify the complainant of the results of the appeal within 60 days of the receipt of the request. If the Chairman determines that additional information is needed from the complainant, he or she shall have 60 days from the date of receipt of the additional information to make his or her determination on the appeal.

(i) The time limits cited in paragraphs (f) and (h) of this section may be extended with the permission of the Assistant Attorney General.

(j) The agency may delegate its authority for conducting complaint investigations to other Federal agencies or may contract with non-Federal entities to conduct such investigations, except that the authority for making the final determination may not be delegated.

§§ 2205.171–2205.999 [Reserved]

PART 2400—REGULATIONS IMPLEMENTING THE PRIVACY ACT

Sec.

2400.1 Purpose and scope.
2400.2 Description of agency.
2400.3 Delegation of authority.
2400.4 Collection and disclosure of personal information.
2400.5 Notification.
2400.6 Procedures for requesting records.
2400.7 Special procedures for requesting medical records.
2400.8 Procedures for requesting amendment.
2400.9 Procedures for appealing.
2400.10 Schedule of fees.

AUTHORITY: 5 U.S.C. 552a(f); 5 U.S.C. 553.

SOURCE: 71 FR 57421, Sept. 29, 2006, unless otherwise noted.

§ 2400.1 Purpose and scope.

The purpose of the provisions of this part is to provide procedures to implement the Privacy Act of 1974 (5 U.S.C. 552a). This part is applicable only to records that are maintained by the Occupational Safety and Health Review

Commission (OSHRC or the Commission), which includes all systems of records operated on behalf of OSHRC, pursuant to a contract, to accomplish an agency function, except for records that are disclosed to consumer reporting agencies under section 3711(e) of title 31, United States Code. This part is not applicable to the rights of parties appearing in adversary proceedings before the Commission to obtain discovery from an adverse party. Such matters are governed by the Commission's Rules of Procedure, which are published at 29 CFR 2200.1 *et seq*.

§ 2400.2 Description of agency.

The Commission adjudicates contested enforcement actions under the Occupational Safety and Health Act of 1970 (29 U.S.C. 651–677). Decisions of the Commission on such actions are issued only after the parties to the case are afforded an opportunity for a hearing in accordance with section 554 of title 5, United States Code. All such hearings are conducted by an OSHRC Administrative Law Judge at a place convenient to the parties and are open to the public. Each Commission member has the authority to direct that a decision of a Judge be reviewed by the full Commission before becoming a final order. The President designates one of the Commissioners as Chairman, who is responsible on behalf of the Commission for the administrative operations of the Commission.

§ 2400.3 Delegation of authority.

(a) The Chairman shall designate an OSHRC employee as the Privacy Officer, and shall delegate to the Privacy Officer the authority to ensure agency-wide compliance with this part.

(b) Custodians of the systems of records are responsible for the following:

(1) Adhering to this part within their respective units and, in particular, collecting, using and disclosing records, and affording individuals the right to inspect, obtain copies of and correct records concerning them;

(2) Reporting the existence of systems of records, changes to the contents of those systems and changes of routine use to the Privacy Officer, and also establishing the relevancy of records within those systems; and

(3) Maintaining an accurate accounting of each disclosure in conformance with § 2400.4(c) of this part.

§ 2400.4 Collection and disclosure of personal information.

(a) The following rules govern the collection of personal information throughout OSHRC operations:

(1) OSHRC shall:

(i) Solicit, collect and maintain in its records only such personal information as is relevant and necessary to accomplish a purpose required by statute or executive order;

(ii) Maintain all records which are used by OSHRC in making any determination about any individual with such accuracy, relevance, timeliness, and completeness as is reasonably necessary to ensure fairness to the individual in the determination;

(iii) Collect information, to the greatest extent practicable, directly from the subject individual when such information may result in adverse determinations about an individual's rights, benefits or privileges under Federal programs; and

(iv) Inform any individual requested to disclose personal information whether that disclosure is mandatory or voluntary, by what authority it is solicited, the principal purposes for which it is intended to be used, the routine uses which may be made of it, and any penalties or consequences known to OSHRC which shall result to the individual from such non-disclosure.

(2) OSHRC shall not discriminate against any individual who fails to provide personal information unless that information is required or necessary for the conduct of the system or program in which the individual desires to participate. See § 2400.4(a)(1)(i).

(3) No record shall be collected or maintained which describes how any individual exercises rights guaranteed by the First Amendment unless the Commission specifically determines that such information is relevant and necessary to carry out a statutory purpose of OSHRC, and the collection or maintenance of the record is expressly

authorized by statute or by the individual about whom the record is maintained, or unless the record is pertinent to and within the scope of an authorized law enforcement activity.

(4) OSHRC shall not require disclosure of any individual's Social Security account number or deny a right, privilege or benefit because of the individual's refusal to disclose the number unless disclosure is required by Federal law.

(b) *Disclosures*—(1) *Limitations*. OSHRC shall not disclose any record which is contained in a system of records by any means of communication to any person, or to another agency, except pursuant to a written request by, or with the prior written consent of, the individual to whom the record pertains.

(2) *Exceptions*. A record may be disseminated without satisfying the requirements of paragraph (b)(1) of this section if disclosure is made:

(i) To a person pursuant to a requirement of the Freedom of Information Act (5 U.S.C. 552);

(ii) To those officers and employees of OSHRC who have a need for the record in the performance of their duties;

(iii) For a routine use as contained in the system notices published in the FEDERAL REGISTER;

(iv) To a recipient who has provided OSHRC with adequate advance written assurance that the record shall be used solely as a statistical reporting or research record, and the record is to be transferred in a form that is not personally identifiable;

(v) To the Bureau of the Census for purposes of planning or carrying out a census or survey or related activity pursuant to the provisions of title 13, United States Code;

(vi) To the National Archives and Records Administration as a record which has sufficient historical or other value to warrant its continued preservation by the United States Government, or for evaluation by the Archivist of the United States or the designee of the Archivist to determine whether the record has such value;

(vii) To a person pursuant to a showing of compelling circumstances affecting the health or safety of an individual, if upon such disclosure notification is transmitted to the last known address of such individual;

(viii) To another agency or an instrumentality of any governmental jurisdiction within or under the control of the United States for a civil or criminal law enforcement activity, if such activity is authorized by law and if the head of the agency or instrumentality has made a written request to OSHRC specifying the particular portion of the record desired and the law enforcement activity for which the record is sought;

(ix) To either House of Congress, or, to the extent of matter within its jurisdiction, any committee or subcommittee thereof, or any joint committee of Congress or subcommittee of any such joint committee;

(x) To the Comptroller General or any of his authorized representatives in the course of the performance of the duties of the Government Accountability Office;

(xi) Pursuant to the order of a court of competent jurisdiction; or

(xii) To a consumer reporting agency in accordance with section 3711(e) of title 31, United States Code.

(3) *Employee credit references*. OSHRC's Office of Administration shall verify the following information provided by an employee to a credit bureau or commercial firm from which an employee is seeking credit: Length of service, job title, grade, salary, tenure of employment, and Civil Service status.

(4) *Employee job references*. Prospective employers of an OSHRC employee or a former OSHRC employee may be furnished with the information in paragraph (b)(3) of this section in addition to the date and reason for separation, if applicable, upon the request of the employee or former employee.

(5) *Disclosures to third parties*. Prior to disseminating any record about an individual to any person other than an agency, unless the record is disseminated pursuant to paragraph (b)(2)(i) of this section, OSHRC shall make reasonable efforts to ensure that the record is accurate, complete, timely and relevant.

(6) *Anticipated legal action*. Nothing in this section shall allow an individual access to any information compiled in

reasonable anticipation of a civil action or proceeding.

(c) *Accounting of disclosures*—(1) OSHRC shall maintain an accurate accounting of each disclosure, except for any disclosure made pursuant to paragraphs (b)(2)(i) and (b)(2)(ii) of this section.

(2) When an accounting is required under paragraph (c)(1) of this section, the following information shall be recorded: The date, nature, and purpose of each disclosure of a record to any person or to another agency, and the name and address of the person or agency to whom the disclosure is made.

(3) The accounting shall be maintained for at least five (5) years after disclosure or for the life of the record, whichever is longer.

(4) The accounting shall be made available to the individual named in the record upon inquiry, except for disclosures made pursuant to paragraph (b)(2)(viii) of this section relating to law enforcement activities. See § 2400.6 for suggested form of request.

§ 2400.5 Notification.

(a) *Notification of systems*. The following procedures permit individuals to determine the types of systems of records maintained by OSHRC.

(1) Upon written request, OSHRC shall notify any individual whether a specific system named by him contains a record pertaining to him. See § 2400.6 for suggested form of request.

(2) Upon establishing or revising a system of records, OSHRC shall publish in the FEDERAL REGISTER a notice of the existence and character of the system of records. This notice shall contain the following information:

(i) System name and location;

(ii) Security classification;

(iii) Categories of individuals covered by the system;

(iv) Categories of records in the system;

(v) Authority for maintenance of the system;

(vi) Purpose(s) of the system;

(vii) Routine uses of records maintained in the system, including categories of users and the purpose(s) of such uses;

(viii) Disclosures to consumer reporting agencies;

(ix) Policies and practices for storing, retrieving, accessing, retaining, and disposing of records in the system;

(x) System manager(s) and address;

(xi) Procedures by which an individual can be informed whether a system contains a record pertaining to himself, gain access to such record, and contest the content, accuracy, completeness, timeliness, relevance and necessity for retention of the record;

(xii) Record source categories; and

(xiii) Exemptions claimed for the system.

(3) OSHRC shall submit a report, in accordance with guidelines provided by the Office of Management and Budget (OMB), in order to give advance notice to the Committee on Government Reform of the House of Representatives, the Committee on Homeland Security and Governmental Affairs of the Senate, and OMB of any proposal to establish a new system of records or to significantly change an existing system of records.

(b) *Notification of disclosure*. OSHRC shall make reasonable efforts to serve notice on an individual before any record pertaining to the individual is made available to any person under compulsory legal process when such process becomes a matter of public record.

(c) *Notification of amendment*—(1) OSHRC shall inform any person or other agency about any correction or notation of dispute made by OSHRC to any record that has been disclosed to the person or agency, if the correction or notation was made pursuant to § 2400.8, and an accounting of the disclosure was made pursuant to § 2400.4(c).

(2) In any disclosure to a person or other agency containing information about which the individual has filed a statement of disagreement and occurring after the statement was filed, OSHRC shall clearly note any portion of the record which is disputed and provide copies of the statement and, if OSHRC deems appropriate, copies of a concise statement of OSHRC's reasons for not making the requested amendments.

(d) *Notification of new routine use*. Any new or revised routine use of a system of records maintained by OSHRC shall

be published in the FEDERAL REGISTER thirty (30) days before such use becomes operational. Interested persons may then submit written data, views, or arguments to OSHRC.

(e) *Notification of exemptions.* OSHRC shall publish in the FEDERAL REGISTER its intent to exempt any system of records and shall specify the nature and purpose of that system.

§ 2400.6 Procedures for requesting records.

The purpose of this section is to provide procedures by which an individual may gain access to his records.

(a) *Submission of requests for access*—(1) *Manner.* An individual seeking information regarding the contents of records systems or access to records about himself in a system of records should present a written request to that effect either in person or by mail to the Privacy Officer, OSHRC, One Lafayette Centre, 1120–20th Street, NW., Ninth Floor, Washington, DC 20036–3457.

(2) *Specification of records sought.* Requests for access to records shall describe the nature of the record sought, the approximate dates covered by the record, and the system in which the record is thought to be included as described in the ''Notification'' for that system as published in the FEDERAL REGISTER. The requester should also indicate whether he wishes to review the record in person or obtain a copy by mail. If the information supplied is insufficient to locate or identify the record, the requester shall be notified promptly and, if necessary, informed of additional information required.

(3) *Period for response.* Upon receipt of an inquiry the Privacy Officer shall respond promptly to the request and no later than 10 working days from receipt of such inquiry.

(b) *Verification of identity.* The following standards are applicable to any individual who requests records concerning himself:

(1) An individual seeking access to records about himself in person may establish his identity by the presentation of a single document bearing a photograph (such as a passport, employee identification card, or valid driver's license) or by the presentation of two items of identification which do not bear a photograph but do bear both a name and address (such as a valid driver's license, or credit card).

(2) An individual seeking access to records about himself by mail shall establish his identity by a signature, address, date of birth, place of birth, employee identification number, if any, and one other identifier such as a photocopy of an identifying document.

(3) An individual seeking access to records about himself by mail or in person who cannot provide the necessary documentation of identification may provide a notarized statement, or a declaration in accordance with 28 U.S.C. 1746, swearing or affirming to his identity and to the fact that he understands the penalties for false statements pursuant to 18 U.S.C. 1001. Forms for notarized statements may be obtained on request from the Privacy Officer.

(c) *Verification of guardianship.* The parent or guardian of a minor or a person judicially determined to be incompetent and seeking to act on behalf of such minor or incompetent shall, in addition to establishing his own identity, establish the identity of the minor or other person he represents as required in paragraph (b) of this section and establish his own parentage or guardianship of the subject of the record by furnishing either a copy of a birth certificate showing parentage or a court order establishing the guardianship.

(d) *Accompanying persons.* An individual seeking to review records about himself may be accompanied by another individual of his own choosing. Both the individual seeking access and the individual accompanying him shall be required to sign a form provided by OSHRC indicating that OSHRC is authorized to discuss the contents of the subject record in the presence of both individuals.

(e) *When compliance is possible*—(1) The Privacy Officer shall inform the requester of the determination to grant the request and shall make the record available to the individual in the manner requested, that is, either by forwarding a copy of the information to him or by making it available for review, unless:

(i) It is impracticable to provide the requester with a copy of a record, in which case the requester shall be so notified, and, in addition, be informed of the procedures set forth in paragraph (b) of this section, or

(ii) The Privacy Officer has reason to believe that the cost of a copy of a record is considerably more expensive than anticipated by the requester, in which case he shall notify the requester of the estimated cost, and ascertain whether the requester still wishes to be provided with a copy of the information.

(2) Where a record is to be reviewed by the requester in person, the Privacy Officer shall inform the requester in writing of:

(i) The date on which the record shall become available for review, the location at which it may be reviewed, and the hours for inspection;

(ii) The type of identification that shall be required in order for him to review the record;

(iii) Such person's right to have a person of his own choosing accompany him to review the record; and

(iv) Such person's right to have a person other than himself review the record.

(3) If the requester seeks to inspect the record without receiving a copy, he shall not leave OSHRC premises with the record and shall sign a statement indicating he has reviewed a specific record or category of record.

(f) *Response when compliance is not possible*. A reply denying a written request to review a record shall be in writing signed by the Privacy Officer and shall be made only if such a record does not exist or does not contain personal information relating to the requester, or is exempt. This reply shall include a statement regarding the determining factors of denial, and the requester's rights to administrative appeal and thereafter judicial review in a district court of the United States.

§ 2400.7 Special procedures for requesting medical records.

(a) Upon an individual's request for access to his medical records, including psychological records, the Privacy Officer shall make a preliminary determination on whether access to such records could have an adverse effect upon the requester. If the Privacy Officer determines that access could have an adverse effect on the requester, OSHRC shall notify the requester in writing and advise that the records at issue can be made available only to a physician of the requester's designation. Upon receipt of such designation, verification of the identity of the physician, and agreement by the physician to review the documents with the requesting individual, to explain the meaning of the documents, and to offer counseling designed to temper any adverse reaction, OSHRC shall forward such records to the designated physician.

(b) If, within sixty (60) days of OSHRC's written request for a designation, the requester has failed to respond or designate a physician, or the physician fails to agree to the release conditions, then OSHRC shall hold the documents in abeyance and advise the requester that this action may be construed as a technical denial. OSHRC shall also advise the requester of his rights to administrative appeal and thereafter judicial review in a district court of the United States.

§ 2400.8 Procedures for requesting amendment.

(a) *Submission of requests for amendment*. Upon review of an individual's personal record, that individual may submit a request to amend such record. This request shall be submitted in writing to the Privacy Officer and shall include a statement of the amendment requested and the reasons for such amendment, e.g., relevance, accuracy, timeliness or completeness of the record.

(b) *Action to be taken by the Privacy Officer*. Upon receiving an amendment request, the Privacy Officer shall promptly:

(1) Acknowledge in writing within ten (10) working days the receipt of the request;

(2) Make such inquiry as is necessary to determine whether the amendment is appropriate; and

(3) Correct or eliminate any information that is found to be incomplete, inaccurate, irrelevant to a statutory purpose of OSHRC, or untimely and notify

the requester when this action is complete; or

(4) Notify the requester of a determination not to amend the record, of the reasons for the refusal, and of the requester's right to appeal in accordance with § 2400.9.

§ 2400.9 Procedures for appealing.

(a) *Submission of appeal*—(1) If a request to inspect, copy or amend a record is denied, in whole or in part, or if no determination is made within the period prescribed by this part, then the requester may appeal to the Chairman, Attn: Privacy Appeal, OSHRC, One Lafayette Centre, 1120–20th Street, NW., Ninth Floor, Washington, DC 20036–3457.

(2) The requester shall submit his appeal in writing within thirty (30) days of the date of denial, or within ninety (90) days of such request if the appeal is from a failure of the Privacy Officer to make a determination. The letter of appeal should include, as applicable:

(i) Reasonable identification of the record to which access was sought or the amendment of which was requested.

(ii) A statement of the OSHRC action or failure to act being appealed and the relief sought.

(iii) A copy of the request, the notification of denial and any other related correspondence.

(b) *Final decisions*. The Chairman shall make his final decision not later than thirty (30) working days from the date of the request, unless he extends the time for good cause to be shown by him but not to exceed ninety (90) days from the date of the request. Any record found on appeal to be incomplete, inaccurate, irrelevant, or untimely, shall within thirty (30) working days of the date of such findings be appropriately amended.

(c) *Decision requirements*. The decision of the Chairman constitutes the final decision of OSHRC on the right of the requester to inspect, copy, change or update a record. The decision on the appeal shall be in writing and, in the event of a denial, shall set forth the reasons for such denial and state the individual's right to obtain judicial review in a district court of the United States. An indexed file of the agency's decisions on appeal shall be maintained by the Privacy Officer.

(d) *Submission of statement of disagreement*. If the final decision does not satisfy the requester, then any statement of reasonable length, provided by that individual, setting forth a position regarding the disputed information, shall be accepted and included in the relevant record.

§ 2400.10 Schedule of fees.

(a) *Policy*. The purpose of this section is to establish fair and equitable fees to permit reproduction of records for concerned individuals.

(b) *Reproduction*—(1) For the fees associated with reproduction of records, refer to Appendix A to part 2201, Schedule of Fees.

(2) OSHRC shall not normally furnish more than one copy of any record.

(c) *Limitations*. No fee shall be charged to any individual for the process of retrieving, reviewing, or amending records.

PARTS 2401–2499 [RESERVED]

CHAPTER XXV—EMPLOYEE BENEFITS SECURITY ADMINISTRATION, DEPARTMENT OF LABOR

EDITORIAL NOTE: Nomenclature changes to chapter XXV appear at 68 FR 16400, Apr. 3, 2003.

SUBCHAPTER A—GENERAL

Part *Page*

2500–2508 [Reserved]

2509 Interpretive bulletins relating to the Employee Retirement Income Security Act of 1974 415

SUBCHAPTER B—DEFINITIONS AND COVERAGE UNDER THE EMPLOYEE RETIREMENT INCOME SECURITY ACT OF 1974

2510 Definitions of terms used in subchapters C, D, E, F, and G of this chapter 443

SUBCHAPTER C—REPORTING AND DISCLOSURE UNDER THE EMPLOYEE RETIREMENT INCOME SECURITY ACT OF 1974

2520 Rules and regulations for reporting and disclosure 473

SUBCHAPTER D—MINIMUM STANDARDS FOR EMPLOYEE PENSION BENEFIT PLANS UNDER THE EMPLOYEE RETIREMENT INCOME SECURITY ACT OF 1974

2530 Rules and regulations for minimum standards for employee pension benefit plans 544

SUBCHAPTER E [RESERVED]

SUBCHAPTER F—FIDUCIARY RESPONSIBILITY UNDER THE EMPLOYEE RETIREMENT INCOME SECURITY ACT OF 1974

2550 Rules and regulations for fiduciary responsibility .. 587

SUBCHAPTER G—ADMINISTRATION AND ENFORCEMENT UNDER THE EMPLOYEE RETIREMENT INCOME SECURITY ACT OF 1974

2560 Rules and regulations for administration and enforcement 666

2570 Procedural regulations under the Employee Retirement Income Security Act 695

Part		Page
2571	Procedural regulations for administration and enforcement under the Employee Retirement Income Security Act	749
2575	Adjustment of civil penalties under ERISA Title I	754
2578	Rules and regulations for abandoned plans	756

SUBCHAPTER H [RESERVED]

SUBCHAPTER I—TEMPORARY BONDING RULES UNDER THE EMPLOYEE RETIREMENT INCOME SECURITY ACT OF 1974

2580	Temporary bonding rules	771

SUBCHAPTER J—FIDUCIARY RESPONSIBILITY UNDER THE FEDERAL EMPLOYEES' RETIREMENT SYSTEM ACT OF 1986

2582	Rules and regulations for fiduciary responsibility	788
2584	Rules and regulations for the allocation of fiduciary responsibility	789

SUBCHAPTER K—ADMINISTRATION AND ENFORCEMENT UNDER THE FEDERAL EMPLOYEES' RETIREMENT SYSTEM ACT OF 1986

2589	Rules and regulations for administration and enforcement	793

SUBCHAPTER L—GROUP HEALTH PLANS

2590	Rules and regulations for group health plans	794
2591–2599	[Reserved]	

SUBCHAPTER A—GENERAL

PARTS 2500–2508 [RESERVED]

PART 2509—INTERPRETIVE BULLETINS RELATING TO THE EMPLOYEE RETIREMENT INCOME SECURITY ACT OF 1974

Sec.

2509.08–1 Supplemental guidance relating to fiduciary responsibility in considering economically targeted investments.

2509.08–2 Interpretive bulletin relating to the exercise of shareholder rights and written statements of investment policy, including proxy voting policies or guidelines.

2509.75–2 Interpretive bulletin relating to prohibited transactions.

2509.75–3 Interpretive bulletin relating to investments by employee benefit plans in securities of registered investment companies.

2509.75–4 Interpretive bulletin relating to indemnification of fiduciaries.

2509.75–5 Questions and answers relating to fiduciary responsibility.

2509.75–6 Interpretive bulletin relating to section 408(c)(2) of the Employee Retirement Income Security Act of 1974.

2509.75–8 Questions and answers relating to fiduciary responsibility under the Employee Retirement Income Security Act of 1974.

2509.75–9 Interpretive bulletin relating to guidelines on independence of accountant retained by Employee Benefit Plan.

2509.75–10 Interpretive bulletin relating to the ERISA Guidelines and the Special Reliance Procedure.

2509.78–1 Interpretive bulletin relating to payments by certain employee welfare benefit plans.

2509.94–3 Interpretive bulletin relating to in-kind contributions to employee benefit plans.

2509.95–1 Interpretive bulletin relating to the fiduciary standards under ERISA when selecting an annuity provider for a defined benefit pension plan.

2509.96–1 Interpretive bulletin relating to participant investment education.

2509.99–1 Interpretive bulletin relating to payroll deduction IRAs.

AUTHORITY: 29 U.S.C. 1135. Secretary of Labor's Order 1–2003, 68 FR 5374 (Feb. 3, 2003). Sections 2509.75–10 and 2509.75–2 issued under 29 U.S.C. 1052, 1053, 1054. Sec. 2509.75–5 also issued under 29 U.S.C. 1002. Sec. 2509.95–1 also issued under sec. 625, Pub. L. 109–280, 120 Stat. 780.

§ 2509.08–1 Supplemental guidance relating to fiduciary responsibility in considering economically targeted investments.

This Interpretive Bulletin sets forth the Department of Labor's interpretation of sections 403 and 404 of the Employee Retirement Income Security Act of 1974 (ERISA), as applied to employee benefit plan investments in ''economically targeted investments,'' that is, investments selected for the economic benefits they create apart from their investment return to the employee benefit plan. The guidance set forth in this interpretive bulletin modifies and supersedes the guidance set forth in interpretive bulletin 94–1 (29 CFR 2509.94–1).

ERISA requires that a fiduciary act solely in the interest of the plan's participants and beneficiaries and for the exclusive purpose of providing benefits to their participants and beneficiaries. The Act specifically states, in relevant part, that:

• ''[A]ssets of a plan shall never inure to the benefit of any employer and shall be held for the exclusive purposes of providing benefits to participants in the plan and their beneficiaries.* * *''[1]

• ''[A] fiduciary shall discharge his duties with respect to a plan solely in the interest of the participants and beneficiaries and for the exclusive purpose of providing benefits to participants and their beneficiaries.''[2]

ERISA's plain text thus establishes a clear rule that in the course of discharging their duties, fiduciaries may never subordinate the economic interests of the plan to unrelated objectives, and may not select investments on the basis of any factor outside the economic interest of the plan except in very limited circumstances enumerated below.

With regard to investing plan assets, the Department has issued a regulation, at 29 CFR 2550.404a–1, interpreting the prudence requirements of ERISA as they apply to the investment duties of fiduciaries of employee benefit plans. The regulation provides that the prudence requirements of section 404(a)(1)(B) are satisfied if (1) the fiduciary making an investment or engaging in an investment course of action has given appropriate consideration to those facts and circumstances that, given the scope of the fiduciary's investment duties, the fiduciary knows or should know are relevant, and (2) the fiduciary acts accordingly. This includes giving appropriate consideration to the role that the investment or investment course of

[1] Sec. 403(c)(1), 29 U.S.C.A. 1103(c)(1).

[2] Sec. 404(a)(1)(A)(i), 29 U.S.C.A. 1104(a)(1)(A)(i).

action plays (in terms of such factors as diversification, liquidity and risk/return characteristics) with respect to that portion of the plan's investment portfolio within the scope of the fiduciary's responsibility.

Other facts and circumstances relevant to an investment or investment course of action would, in the view of the Department, include consideration of the expected return on alternative investments with similar risks available to the plan. It follows that, because every investment necessarily causes a plan to forgo other investment opportunities, an investment will not be prudent if it would be expected to provide a plan with a lower rate of return than available alternative investments with commensurate degrees of risk or is riskier than alternative available investments with commensurate rates of return.

ERISA's plain text does not permit fiduciaries to make investment decisions on the basis of any factor other than the economic interest of the plan. Situations may arise, however, in which two or more investment alternatives are of equal economic value to a plan. The Department has recognized in past guidance that under these limited circumstances, fiduciaries can choose between the investment alternatives on the basis of a factor other than the economic interest of the plan. The Department has interpreted the statute to permit this selection because (1) ERISA requires fiduciaries to invest plan assets and to make choices between investment alternatives, (2) ERISA does not itself specifically provide a basis for making the investment choice in this circumstance, and (3) the economic interests of the plan are fully protected by the fact that the available investment alternatives are, from the plan's perspective, economically indistinguishable.

Given the significance of ERISA's requirement that fiduciaries act ''solely in the interest of participants and beneficiaries,'' the Department believes that, before selecting an economically targeted investment, fiduciaries must have first concluded that the alternative options are truly equal, taking into account a quantitative and qualitative analysis of the economic impact on the plan. ERISA's fiduciary standards expressed in sections 403 and 404 do not permit fiduciaries to select investments based on factors outside the economic interests of the plan until they have concluded, based on economic factors, that alternative investments are equal. A less rigid rule would allow fiduciaries to act on the basis of factors outside the economic interest of the plan in situations where reliance on those factors might compromise or subordinate the interests of plan participants and their beneficiaries. The Department rejects a construction of ERISA that would render the Act's tight limits on the use of plan assets illusory, and that would permit plan fiduciaries to expend ERISA trust assets to promote myriad public policy preferences.[3]

A plan fiduciary's analysis is required to comply with, but is not necessarily limited to, the requirements set forth in 29 CFR 2550.404a–1(b). In evaluating the plan portfolio, as well as portions of the portfolio, the fiduciary is required to examine the level of diversification, degree of liquidity, and the potential risk/return in comparison with available alternative investments. The same type of analysis must also be applied when choosing between investment alternatives. Potential investments should be compared to other investments that would fill a similar role in the portfolio with regard to diversification, liquidity, and risk/return.

In light of the rigorous requirements established by ERISA, the Department believes that fiduciaries who rely on factors outside the economic interests of the plan in making investment choices and subsequently find their decision challenged will rarely be able to demonstrate compliance with ERISA absent a written record demonstrating that a contemporaneous economic analysis showed that the investment alternatives were of equal value.

Examples:

A plan owns an interest in a limited partnership that is considering investing in a company that competes with the plan sponsor. The fiduciaries may not replace the limited partnership investment with another investment based on this fact unless they prudently determine that a replacement investment is economically equal or superior to the limited partnership investment and would not adversely affect the plan's investment portfolio, taking into account factors including diversification, liquidity, risk and expected return. The competition of the limited partnership with the plan sponsor is a factor outside the economic interests of the plan, and thus cannot be considered unless an alternative investment is equal or superior to the limited partnership.

A multiemployer plan covering employees in a metropolitan area's construction industry wants to invest in a large loan for a construction project located in the same area because it will create local jobs. The plan has taken steps to ensure that the loan poses no prohibited transaction issues. The loan carries a return fully commensurate with the risk of nonpayment. Moreover, the loan's expected return is equal to or greater than construction loans of similar quality that are available to the plan. However, the plan

[3] See letters from the Department of Labor to Jonathan Hiatt dated May 3, 2005; to Thomas Donahue dated December 21, 2007 (A.O. 2007–07A); and to David Chavern dated June 27, 2008 (A.O. 2008–05A).

has already made several other loans for construction projects in the same metropolitan area, and this loan could create a risk of large losses to the plan's portfolio due to lack of diversification. The fiduciaries may not choose this investment on the basis of the local job creation factor because, due to lack of diversification, the investment is not of equal economic value to the plan.

A plan is considering an investment in a bond to finance affordable housing for people in the local community. The bond provides a return at least as favorable to the plan as other bonds with the same risk rating. However, the bond's size and lengthy duration raises a potential risk regarding the plan's ability to meet its predicted liquidity needs. Other available bonds under consideration by the plan do not pose this same risk. The return on the bond, although equal to or greater than the alternatives, would not be sufficient to offset the additional risk for the plan created by the role that this bond would play in the plan's portfolio. The plan's fiduciaries may not make this investment based on factors outside the economic interest of the plan because it is not of equal or greater economic value to other investment alternatives.

A plan sponsor adopts an investment policy that favors plan investment in companies meeting certain environmental criteria (so-called ''green'' companies). In carrying out the policy, the plan's fiduciaries may not simply consider investments only in green companies. They must consider all investments that meet the plan's prudent financial criteria. The fiduciaries may apply the investment policy to eliminate a company from consideration only if they appropriately determine that other available investments provide equal or better returns at the same or lower risks, and would play the same role in the plan's portfolio.

A collective investment fund, which holds assets of several plans, is designed to invest in commercial real estate constructed or renovated with union labor. Fiduciaries of plans that invest in the fund must determine that the fund's overall risk and return characteristics are as favorable, or more favorable, to the plans as other available investment alternatives that would play a similar role in their plans' portfolios. The fund's managers may select investments constructed or improved with union labor, after an economic analysis indicates that these investment options are equal or superior to their alternatives. The managers will best be able to justify their investment choice by recording their analysis in writing. However, if real estate investments that satisfy both ERISA's fiduciary requirements and the union labor criterion are unavailable, the fund managers may have to select investments without regard to the union labor criterion.

[73 FR 61735, Oct. 17, 2008]

§ 2509.08–2 Interpretive bulletin relating to the exercise of shareholder rights and written statements of investment policy, including proxy voting policies or guidelines.

This interpretive bulletin sets forth the Department of Labor's (the Department) interpretation of sections 402, 403 and 404 of the Employee Retirement Income Security Act of 1974 (ERISA) as those sections apply to voting of proxies on securities held in employee benefit plan investment portfolios and the maintenance of and compliance with statements of investment policy, including proxy voting policy. In addition, this interpretive bulletin provides guidance on the appropriateness under ERISA of active monitoring of corporate management by plan fiduciaries. The guidance set forth in this interpretive bulletin modifies and supersedes the guidance set forth in interpretive bulletin 94–2 (29 CFR 2509.94–2).

(1) Proxy Voting

The fiduciary act of managing plan assets that are shares of corporate stock includes the management of voting rights appurtenant to those shares of stock.[1] As a result, the responsibility for voting or deciding not to vote proxies lies exclusively with the plan trustee except to the extent that either (1) the trustee is subject to the direction of a named fiduciary pursuant to ERISA Sec. 403(a)(1); or (2) the power to manage, acquire or dispose of the relevant assets has been delegated by a named fiduciary to one or more investment managers pursuant to ERISA Sec. 403(a)(2). Where the authority to manage plan assets has been delegated to an investment manager pursuant to Sec. 403(a)(2), no person other than the investment manager has authority to make voting decisions for proxies appurtenant to such plan assets except to the extent that the named fiduciary has reserved to itself (or to another named fiduciary so authorized by the plan document) the right to direct a plan trustee regarding the voting of proxies. In this regard, a named fiduciary, in delegating investment management authority to an investment manager, could reserve to itself the right to direct a trustee with respect to the voting of all proxies or reserve to itself the right to direct a trustee as to the voting

[1] *See* letter from the Department of Labor to Helmut Fandl, Chairman of the Retirement Board of Avon Products, Inc., dated February 23, 1988.

of only those proxies relating to specified assets or issues.

If the plan document or investment management agreement provides that the investment manager is not required to vote proxies, but does not expressly preclude the investment manager from voting proxies, the investment manager would have exclusive responsibility for proxy voting decisions. Moreover, an investment manager would not be relieved of its own fiduciary responsibilities by following directions of some other person regarding the voting of proxies, or by delegating such responsibility to another person. If, however, the plan document or the investment management contract expressly precludes the investment manager from voting proxies, the responsibility for voting proxies would lie exclusively with the trustee. The trustee, however, consistent with the requirements of ERISA Sec. 403(a)(1), may be subject to the directions of a named fiduciary if the plan so provides.

The fiduciary duties described at ERISA Sec. 404(a)(1)(A) and (B), require that, in voting proxies, regardless of whether the vote is made pursuant to a statement of investment policy, the responsible fiduciary shall consider only those factors that relate to the economic value of the plan's investment and shall not subordinate the interests of the participants and beneficiaries in their retirement income to unrelated objectives. Votes shall only be cast in accordance with a plan's economic interests. If the responsible fiduciary reasonably determines that the cost of voting (including the cost of research, if necessary, to determine how to vote) is likely to exceed the expected economic benefits of voting, or if the exercise of voting results in the imposition of unwarranted trading or other restrictions, the fiduciary has an obligation to refrain from voting.[2] In making this determination, objectives, considerations, and economic effects unrelated to the plan's economic interests cannot be considered. The fiduciary's duties under ERISA Sec. 404(a)(1)(A) and (B) also require that the named fiduciary appointing an investment manager periodically monitor the activities of the investment manager with respect to the management of plan assets, including decisions made and actions taken by the investment manager with regard to proxy voting decisions. The named fiduciary must carry out this responsibility solely in the participants' and beneficiaries' interest in the economic value of the plan assets and without regard to the fiduciary's relationship to the plan sponsor.

It is the view of the Department that compliance with the duty to monitor necessitates proper documentation of the activities that are subject to monitoring. Thus, the investment manager or other responsible fiduciary would be required to maintain accurate records as to proxy voting decisions, including, where appropriate, cost-benefit analyses.[3] Moreover, if the named fiduciary is to be able to carry out its responsibilities under ERISA Sec. 404(a) in determining whether the investment manager is fulfilling its fiduciary obligations in investing plans assets in a manner that justifies the continuation of the management appointment, the proxy voting records must enable the named fiduciary to review not only the investment manager's voting procedure with respect to plan-owned stock, but also to review the actions taken in individual proxy voting situations.

The fiduciary obligations of prudence and loyalty to plan participants and beneficiaries require the responsible fiduciary to vote proxies on issues that may affect the economic value of the plan's investment. However, fiduciaries also need to take into account costs when deciding whether and how to exercise their shareholder rights, including the voting of shares. Such costs include, but are not limited to, expenditures related to developing proxy resolutions, proxy voting services and the analysis of the likely net effect of a particular issue on the economic value of the plan's investment. Fiduciaries must take all of these factors into account in determining whether the exercise of such rights (e.g., the voting of a proxy), independently or in conjunction with other shareholders, is expected to have an effect on the economic value of the plan's investment that will outweigh the cost of exercising such rights. With respect to proxies appurtenant to shares of foreign corporations, a fiduciary, in deciding whether to purchase shares of a foreign corporation, should consider whether any additional difficulty and expense in voting such shares is reflected in their market price.

(2) Statements of Investment Policy

The maintenance by an employee benefit plan of a statement of investment policy designed to further the purposes of the plan and its funding policy is consistent with the fiduciary obligations set forth in ERISA section 404(a)(1)(A) and (B). Because the fiduciary act of managing plan assets that are shares of corporate stock includes the voting, where appropriate, of proxies appurtenant to those shares of stock, a statement of proxy voting policy would be an important part of any comprehensive statement of investment policy. For purposes of this document, the term ''statement of investment

[2] *See* Advisory Opinion No. 2007–07A (December 21, 2007).

[3] *See* letter from the Department of Labor to Robert A.G. Monks, Institutional Shareholder Services, Inc., January 23, 1990.

policy'' means a written statement that provides the fiduciaries who are responsible for plan investments with guidelines or general instructions concerning various types or categories of investment management decisions, which may include proxy voting decisions. A statement of investment policy is distinguished from directions as to the purchase or sale of a specific investment at a specific time or as to voting specific plan proxies.

In plans where investment management responsibility is delegated to one or more investment managers appointed by the named fiduciary pursuant to ERISA Sec. 402(c)(3), inherent in the authority to appoint an investment manager, the named fiduciary responsible for appointment of investment managers has the authority to condition the appointment on acceptance of a statement of investment policy. Thus, such a named fiduciary may expressly require, as a condition of the investment management agreement, that an investment manager comply with the terms of a statement of investment policy that sets forth guidelines concerning investments and investment courses of action that the investment manager is authorized or is not authorized to make. Such investment policy may include a policy or guidelines on the voting of proxies on shares of stock for which the investment manager is responsible. Such guidelines must be consistent with the fiduciary obligations set forth in ERISA Sec. 404(a)(1)(A) and (B) and this Interpretive Bulletin, and may not subordinate the economic interests of the plan participants to unrelated objectives. In the absence of such an express requirement to comply with an investment policy, the authority to manage the plan assets placed under the control of the investment manager would lie exclusively with the investment manager. Although a trustee may be subject to the direction of a named fiduciary pursuant to ERISA Sec. 403(a)(1), an investment manager who has authority to make investment decisions, including proxy voting decisions, would never be relieved of its fiduciary responsibility if it followed the direction as to specific investment decisions from the named fiduciary or any other person.

Statements of investment policy issued by a named fiduciary authorized to appoint investment managers would be part of the ''documents and instruments governing the plan'' within the meaning of ERISA Sec. 404(a)(1)(D). An investment manager to whom such investment policy applies would be required to comply with such policy, pursuant to ERISA Sec. 404(a)(1)(D) insofar as the policy directives or guidelines are consistent with titles I and IV of ERISA. Therefore, if, for example, compliance with the guidelines in a given instance would be imprudent, then the investment manager's failure to follow the guidelines would not violate ERISA Sec. 404(a)(1)(D). Moreover, ERISA Sec. 404(a)(1)(D) does not shield the investment manager from liability for imprudent actions taken in compliance with a statement of investment policy.

The plan document or trust agreement may expressly provide a statement of investment policy to guide the trustee or may authorize a named fiduciary to issue a statement of investment policy applicable to a trustee. Where a plan trustee is subject to an investment policy, the trustee's duty to comply with such investment policy would also be analyzed under ERISA Sec. 404(a)(1)(D). Thus, the trustee would be required to comply with the statement of investment policy unless, for example, it would be imprudent to do so in a given instance.

Maintenance of a statement of investment policy by a named fiduciary does not relieve the named fiduciary of its obligations under ERISA Sec. 404(a) with respect to the appointment and monitoring of an investment manager or trustee. In this regard, the named fiduciary appointing an investment manager must periodically monitor the investment manager's activities with respect to management of the plan assets. Moreover, compliance with ERISA Sec. 404(a)(1)(B) would require maintenance of proper documentation of the activities of the investment manager and of the named fiduciary of the plan in monitoring the activities of the investment manager. In addition, in the view of the Department, a named fiduciary's determination of the terms of a statement of investment policy is an exercise of fiduciary responsibility and, as such, statements may need to take into account factors such as the plan's funding policy and its liquidity needs as well as issues of prudence, diversification and other fiduciary requirements of ERISA.

An investment manager of a pooled investment vehicle that holds assets of more than one employee benefit plan may be subject to a proxy voting policy of one plan that conflicts with the proxy voting policy of another plan. If the investment manager determines that compliance with one of the conflicting voting policies would violate ERISA Sec. 404(a)(1), for example, by being imprudent or not solely in the economic interest of plan participants, the investment manager would be required to ignore the policy and vote in accordance with ERISA's obligations. If, however, the investment manager reasonably concludes that application of each plan's voting policy is consistent with ERISA's obligations, such as when the policies reflect different but reasonable judgments or when the plans have different economic interests, ERISA Sec. 404(a)(1)(D) would generally require the manager, to the extent permitted by applicable law, to vote the proxies in proportion to each plan's interest in the pooled investment vehicle. An

investment manager may also require participating investors to accept the investment manager's own investment policy statement, including any statement of proxy voting policy, before they are allowed to invest, which may help to avoid such potential conflicts. As with investment policies originating from named fiduciaries, a policy initiated by an investment manager and adopted by the participating plans would be regarded as an instrument governing the participating plans, and the investment manager's compliance with such a policy would be governed by ERISA Sec. 404(a)(1)(D).

(3) Shareholder Activism

An investment policy that contemplates activities intended to monitor or influence the management of corporations in which the plan owns stock is consistent with a fiduciary's obligations under ERISA where the responsible fiduciary concludes that there is a reasonable expectation that such monitoring or communication with management, by the plan alone or together with other shareholders, will enhance the economic value of the plan's investment in the corporation, after taking into account the costs involved. Such a reasonable expectation may exist in various circumstances, for example, where plan investments in corporate stock are held as long-term investments or where a plan may not be able to easily dispose such an investment. Active monitoring and communication activities would generally concern such issues as the independence and expertise of candidates for the corporation's board of directors and assuring that the board has sufficient information to carry out its responsibility to monitor management. Other issues may include such matters as consideration of the appropriateness of executive compensation, the corporation's policy regarding mergers and acquisitions, the extent of debt financing and capitalization, the nature of long-term business plans, the corporation's investment in training to develop its work force, other workplace practices and financial and non-financial measures of corporate performance that are reasonably likely to affect the economic value of the plan. Active monitoring and communication may be carried out through a variety of methods including by means of correspondence and meetings with corporate management as well as by exercising the legal rights of a shareholder. In creating an investment policy, a fiduciary shall consider only factors that relate to the economic interest of participants and their beneficiaries in plan assets, and shall not use an investment policy to promote myriad public policy preferences.[4]

(4) Socially-Directed Proxy Voting, Investment Policies and Shareholder Activism.

Plan fiduciaries risk violating the exclusive purpose rule when they exercise their fiduciary authority in an attempt to further legislative, regulatory or public policy issues through the proxy process. In such cases, the Department would expect fiduciaries to be able to demonstrate in enforcement actions their compliance with the requirements of section 404(a)(1)(A) and (B). The mere fact that plans are shareholders in the corporations in which they invest does not itself provide a rationale for a fiduciary to spend plan assets to pursue, support, or oppose such proxy proposals. Because of the heightened potential for abuse in such cases, the fiduciaries must be prepared to articulate a clear basis for concluding that the proxy vote, the investment policy, or the activity intended to monitor or influence the management of the corporation is more likely than not to enhance the economic value of the plan's investment before expending plan assets.

The use of pension plan assets by plan fiduciaries to further policy or political issues through proxy resolutions that have no connection to enhancing the economic value of the plan's investment in a corporation would, in the view of the Department, violate the prudence and exclusive purpose requirements of section 404(a)(1)(A) and (B). For example, the likelihood that the adoption of a proxy resolution or proposal requiring corporate directors and officers to disclose their personal political contributions would enhance the economic value of a plan's investment in the corporation appears sufficiently remote that the expenditure of plan assets to further such a resolution or proposal clearly raises compliance issues under section 404(a)(1)(A) and (B).[5]

[73 FR 61732, Oct. 17, 2008]

§ 2509.75–2 Interpretive bulletin relating to prohibited transactions.

On February 6, 1975, the Department of Labor issued an interpretive bulletin, ERISA IB 75–2, with respect to whether a party in interest has engaged in a prohibited transaction with an employee benefit plan where the party in interest has engaged in a transaction with a corporation or partnership (within the meaning of section 7701 of the Internal Revenue Code of 1954) in which the plan has invested.

On November 13, 1986 the Department published a final regulation dealing with the definition of ''plan assets''. See § 2510.3–101 of

[4] See Advisory Opinion No. 2008–05A (June 27, 2008) and letter from Department of Labor to Jonathan P. Hiatt, General Counsel, AFL–CIO (May 3, 2005).

[5] *See* Advisory Opinion No. 2007–07A (December 21, 2007).

this title. Under that regulation, the assets of certain entities in which plans invest would include ''plan assets'' for purposes of the fiduciary responsibility provisions of the Act. Section 2510.3–101 applies only for purposes of identifying plan assets on or after the effective date of that section, however, and § 2510.3–101 does not apply to plan investments in certain entities that qualify for the transitional relief provided for in paragraph (k) of that section. The principles discussed in paragraph (a) of this Interpretive Bulletin continue to be applicable for purposes of identifying assets of a plan for periods prior to the effective date of § 2510.3–101 and for investments that are subject to the transitional rule in § 2510.3–101(k). Paragraphs (b) and (c) of this Interpretive Bulletin, however, relate to matters outside the scope of § 2510.3–101, and nothing in that section affects the continuing application of the principles discussed in those parts.

(a) *Principles applicable to plan investments to which § 2510.3–101 does not apply*. Generally, investment by a plan in securities (within the meaning of section 3(20) of the Employee Retirement Income Security Act of 1974) of a corporation or partnership will not, solely by reason of such investment, be considered to be an investment in the underlying assets of such corporation or partnership so as to make such assets of the entity ''plan assets'' and thereby make a subsequent transaction between the party in interest and the corporation or partnership a prohibited transaction under section 406 of the Act.

For example, where a plan acquires a security of a corporation or a limited partnership interest in a partnership, a subsequent lease or sale of property between such corporation or partnership and a party in interest will not be a prohibited transaction solely by reason of the plan's investment in the corporation or partnership.

This general proposition, as applied to corporations and partnerships, is consistent with section 401(b)(1) of the Act, relating to plan investments in investment companies registered under the Investment Company Act of 1940. Under section 401(b)(1), an investment by a plan in securities of such an investment company may be made without causing, solely by reason of such investment, any of the assets of the investment company to be considered to be assets of the plan.

(b) [Reserved]

(c) *Applications of the fiduciary responsibility rules*. The preceding paragraphs do not mean that an investment of plan assets in a security of a corporation or partnership may not be a prohibited transaction. For example, section 406(a)(1)(D) prohibits the direct or indirect transfer to, or use by or for the benefit of, a party in interest of any assets of the plan and section 406(b)(1) prohibits a fiduciary from dealing with the assets of the plan in his own interest or for his own account.

Thus, for example, if there is an arrangement under which a plan invests in, or retains its investment in, an investment company and as part of the arrangement it is expected that the investment company will purchase securities from a party in interest, such arrangement is a prohibited transaction.

Similarly, the purchase by a plan of an insurance policy pursuant to an arrangement under which it is expected that the insurance company will make a loan to a party in interest is a prohibited transaction.

Moreover, notwithstanding the foregoing, if a transaction between a party in interest and a plan would be a prohibited transaction, then such a transaction between a party in interest and such corporation or partnership will ordinarily be a prohibited transaction if the plan may, by itself, require the corporation or partnership to engage in such transaction.

Similarly, if a transaction between a party in interest and a plan would be a prohibited transaction, then such a transaction between a party in interest and such corporation or partnership will ordinarily be a prohibited transaction if such party in interest, together with one or more persons who are parties in interest by reason of such persons' relationship (within the meaning of section 3(14)(E) through (I)) to such party in interest may, with the aid of the plan but without the aid of any other persons, require the corporation or partnership to engage in such a transaction. However, the preceding sentence does not apply if the parties in interest engaging in the transaction, together with one or more persons who are parties in interest by reason of such persons' relationship (within the meaning of section 3(14)(E) through (I)) to such party in interest, may, by themselves, require the corporation or partnership to engage in the transaction.

Further, the Department of Labor emphasizes that it would consider a fiduciary who makes or retains an investment in a corporation or partnership for the purpose of avoiding the application of the fiduciary responsibility provisions of the Act to be in contravention of the provisions of section 404(a) of the Act.

[51 FR 41280, Nov. 13, 1986, as amended at 61 FR 33849, July 1, 1996]

§ 2509.75–3 Interpretive bulletin relating to investments by employee benefit plans in securities of registered investment companies.

On March 12, 1975, the Department of Labor issued an interpretive bulletin, ERISA IB 75–3, with regard to its interpretation of section 3(21)(B) of the Employee Retirement Income Security Act of 1974. That section provides

that an investment by an employee benefit plan in securities issued by an investment company registered under the Investment Company Act of 1940 shall not by itself cause the investment company, its investment adviser or principal underwriter to be deemed to be a fiduciary or party in interest ''except insofar as such investment company or its investment adviser or principal underwriter acts in connection with an employee benefit plan covering employees of the investment company, the investment adviser, or its principal underwriter.''

The Department of Labor interprets this section as an elaboration of the principle set forth in section 401(b)(1) of the Act and ERISA IB 75–2 (issued February 6, 1975) that the assets of an investment company shall not be deemed to be assets of a plan solely by reason of an investment by such plan in the shares of such investment company. Consistent with this principle, the Department of Labor interprets this section to mean that a person who is connected with an investment company, such as the investment company itself, its investment adviser or its principal underwriter, is not to be deemed to be a fiduciary of or party in interest with respect to a plan solely because the plan has invested in the investment company's shares.

This principle applies, for example, to a plan covering employees of an investment adviser to an investment company where the plan invests in the securities of the investment company. In such a case the investment company or its principal underwriter is not to be deemed to be a fiduciary of or party in interest with respect to the plan solely because of such investment.

On the other hand, the exception clause in section 3(21) emphasizes that if an investment company, its investment adviser or its principal underwriter is a fiduciary or party in interest for a reason other than the investment in the securities of the investment company, such a person remains a party in interest or fiduciary. Thus, in the preceding example, since an employer is a party in interest, the investment adviser remains a party in interest with respect to a plan covering its employees.

The Department of Labor emphasized that an investment adviser, principal underwriter or investment company which is a fiduciary by virtue of section 3(21)(A) of the Act is subject to the fiduciary responsibility provisions of part 4 of title I of the Act, including those relating to fiduciary duties under section 404.

[40 FR 31599, July 28, 1975. Redesignated at 41 FR 1906, Jan. 13, 1976]

§ 2509.75–4 Interpretive bulletin relating to indemnification of fiduciaries.

On June 4, 1975, the Department of Labor issued an interpretive bulletin, ERISA IB 75–4, announcing the Department's interpretation of section 410(a) of the Employee Retirement Income Security Act of 1974, insofar as that section relates to indemnification of fiduciaries. Section 410(a) states, in relevant part, that ''any provision in an agreement or instrument which purports to relieve a fiduciary from responsibility or liability for any responsibility, obligation, or duty under this part shall be void as against public policy.''

The Department of Labor interprets this section to permit indemnification agreements which do not relieve a fiduciary of responsibility or liability under part 4 of title I. Indemnification provisions which leave the fiduciary fully responsible and liable, but merely permit another party to satisfy any liability incurred by the fiduciary in the same manner as insurance purchased under section 410(b)(3), are therefore not void under section 410(a).

Examples of such indemnification provisions are:

(1) Indemnification of a plan fiduciary by (a) an employer, any of whose employees are covered by the plan, or an affiliate (as defined in section 407(d)(7) of the Act) of such employer, or (b) an employee organization, any of whose members are covered by the plan; and

(2) Indemnification by a plan fiduciary of the fiduciary's employees who actually perform the fiduciary services.

The Department of Labor interprets section 410(a) as rendering void any arrangement for indemnification of a fiduciary of an employee benefit plan by the plan. Such an arrangement would have the same result as an exculpatory clause, in that it would, in effect, relieve the fiduciary of responsibility and liability to the plan by abrogating the plan's right to recovery from the fiduciary for breaches of fiduciary obligations.

While indemnification arrangements do not contravene the provisions of section 410(a), parties entering into an indemnification agreement should consider whether the agreement complies with the other provisions of part 4 of title I of the Act and with other applicable laws.

[40 FR 31599, July 28, 1975. Redesignated at 41 FR 1906, Jan. 13, 1976]

§ 2509.75–5 Questions and answers relating to fiduciary responsibility.

On June 25, 1975, the Department of Labor issued an interpretive bulletin, ERISA IB 75–5, containing questions and answers relating to certain aspects of the recently enacted

Employee Retirement Income Security Act of 1974 (the ''Act'').

Pending the issuance of regulations or other guidelines, persons may rely on the answers to these questions in order to resolve the issues that are specifically considered. No inferences should be drawn regarding issues not raised which may be suggested by a particular question and answer or as to why certain questions, and not others, are included. Furthermore, in applying the questions and answers, the effect of subsequent legislation, regulations, court decisions, and interpretative bulletins must be considered. To the extent that plans utilize or rely on these answers and the requirements of regulations subsequently adopted vary from the answers relied on, such plans may have to be amended.

An index of the questions and answers, relating them to the appropriate sections of the Act, is also provided.

INDEX

KEY TO QUESTION PREFIXES

D—Refers to Definitions.
FR—Refers to Fiduciary Responsibility.

Section No.	Question No.
3(21)	D–1.
3(38)	FR–6, FR–7.
402(a)	FR–1, FR–2, FR–3.
402(b)(1)	FR–4, FR–5.
402(c)(3)	FR–6, FR–7.
404(a)	FR–10.
405(a)(3)	FR–10.
405(b)(1)(A)	FR–10.
406(a)	FR–9.
409(a)	FR–10.
412(a)	FR–8, FR–9.

D–1 Q: Is an attorney, accountant, actuary or consultant who renders legal, accounting, actuarial or consulting services to an employee benefit plan (other than an investment adviser to the plan) a fiduciary to the plan solely by virtue of the rendering of such services, absent a showing that such consultant (a) exercises discretionary authority or discretionary control respecting the management of the plan, (b) exercises authority or control respecting management or disposition of the plan's assets, (c) renders investment advice for a fee, direct or indirect, with respect to the assets of the plan, or has any authority or responsibility to do so, or (d) has any discretionary authority or discretionary responsibility in the administration of the plan?

A: No. However, while attorneys, accountants, actuaries and consultants performing their usual professional functions will ordinarily not be considered fiduciaries, if the factual situation in a particular case falls within one of the categories described in clauses (a) through (d) of this question, such persons would be considered to be fiduciaries within the meaning of section 3(21) of the Act. The Internal Revenue Service notes that such persons would also be considered to be fiduciaries within the meaning of section 4975(e)(3) of the Internal Revenue Code of 1954.

FR–1 Q: If an instrument establishing an employee benefit plan provides that the plan committee shall control and manage the operation and administration of the plan and specifies who shall constitute the plan committee (either by position or by naming individuals to the committee), does such provision adequately satisfy the requirement in section 402(a) that a ''named fiduciary'' be provided for in a plan instrument?

A: Yes. While the better practice would be to state explicitly that the plan committee is the ''named fiduciary'' for purposes of the Act, clear identification of one or more persons, by name or title, combined with a statement that such person or persons have authority to control and manage the operation and administration of the plan, satisfies the ''named fiduciary'' requirement of section 402(a). The purpose of this requirement is to enable employees and other interested persons to ascertain who is responsible for operating the plan. The instrument in the above example, which provides that ''the plan committee shall control and manage the operation and administration of the plan'', and specifies, by name or position, who shall constitute the committee, fulfills this requirement.

FR–2 Q: In a union negotiated employee benefit plan, the instrument establishing the plan provides that a joint board on which employees and employers are equally represented shall control and manage the operation and administration of the plan. Does this provision adequately satisfy the requirement in section 402(a) that a ''named fiduciary'' be provided for in a plan instrument?

A: Yes, for the reasons stated in response to question FR–1. The joint board is clearly identified as the entity which has authority to control and manage the operation and administration of the plan, and the persons designated to be members of such joint board would be named fiduciaries under section 402(a).

FR–3 Q: May an employee benefit plan covering employees of a corporation designate the corporation as the ''named fiduciary'' for purposes of section 402(a)(1) of the Act?

A: Yes, it may. Section 402(a)(2) of the Act states that a ''named fiduciary'' is a fiduciary either named in the plan instrument or designated according to a procedure set forth in the plan instrument. A fiduciary is a ''person'' falling within the definition of fiduciary set forth in section 3(21)(A) of the Act. A ''person'' may be a corporation under the definition of person contained in section 3(9) of the Act. While such designation satisfies the requirement of enabling employees

and other interested persons to ascertain the person or persons responsible for operating the plan, a plan instrument which designates a corporation as ''named fiduciary'' should provide for designation by the corporation of specified individuals or other persons to carry out specified fiduciary responsibilities under the plan, in accordance with section 405(c)(1)(B) of the Act.

FR–4 Q: A defined benefit pension plan's procedure for establishing and carrying out a funding policy provides that the plan's trustees shall, at a meeting duly called for the purpose, establish a funding policy and method which satisfies the requirements of part 3 of title I of the Act, and shall meet annually at a stated time of the year to review such funding policy and method. It further provides that all actions taken with respect to such funding policy and method and the reasons therefor shall be recorded in the minutes of the trustees' meetings. Does this procedure comply with section 402(b)(1) of the Act?

A: Yes. The above procedure specifies who is to establish the funding policy and method for the plan, and provides for a written record of the actions taken with respect to such funding policy and method, including the reasons for such actions. The purpose of the funding policy requirement set forth in section 402(b)(1) is to enable plan participants and beneficiaries to ascertain that the plan has a funding policy that meets the requirements of part 3 of title I of the Act. The procedure set forth above meets that requirement.

FR–5 Q: Must a welfare plan in which the benefits are paid out of the general assets of the employer have a procedure for establishing and carrying out a funding policy set forth in the plan instrument?

A: No. Section 402(b)(1) requires that the plan provide for such a procedure ''consistent with the objectives of the plan'' and requirements of title I of the Act. In situations in which a plan is unfunded and title I of the Act does not require the plan to be funded, there is no need to provide for such a procedure. If the welfare plan were funded, a procedure consistent with the objectives of the plan would have to be established.

FR–6 Q: May an investment adviser which is neither a bank nor an insurance company, and which is neither registered under the Investment Advisers Act of 1940 nor registered as an investment adviser in the State where it maintains its principal office and place of business, be appointed an investment manager under section 402(c)(3) of the Act?

A: No. The only persons who may be appointed an investment manager under section 402(c)(3) of the Act are persons who meet the requirements of section 3(38) of the Act—namely, banks (as defined in the Investment Advisers Act of 1940), insurance companies qualified under the laws of more than one state to manage, acquire and dispose of plan assets, persons registered as investment advisers under the Investment Advisers Act of 1940, or persons not registered under the Investment Advisers Act by reason of paragraph 1 of section 203A(a) of that Act who are registered as investment advisers in the State where they maintain their principal office and place of business in accordance with ERISA section 3(38) and who have met the filing requirements of 29 CFR 2510.3–38.

FR–7 Q: May an investment adviser that has a registration application pending for federal registration under the Investment Advisers Act of 1940, or pending with the appropriate state regulatory body under State investment adviser registration laws if relying on the provisions of 29 CFR 2510.3–38 to qualify as a state-registered investment manager, function as an investment manager under the Act prior to the effective date of their federal or state registration?

A: No, for the reasons stated in the answer to FR–6 above.

FR–8 Q: Under the temporary bonding regulation set forth in 29 CFR 2550.412–1, must a person who renders investment advice to a plan for a fee or other compensation, direct or indirect, but who does not exercise or have the right to exercise discretionary authority with respect to the assets of the plan, be bonded solely by reason of the provision of such investment advice?

A: No. A person who renders investment advice, but who does not exercise or have the right to exercise discretionary authority with respect to plan assets, is not required to be bonded solely by reason of the provision of such investment advice. Such a person is not considered to be ''handling'' funds within the meaning of the temporary bonding regulation set forth in 29 CFR 2550.412–1, which incorporates by reference 29 CFR 464.7. For purposes of the temporary bonding regulation, only those fiduciaries who handle funds must be bonded. If, in addition to the rendering of investment advice, such person performs any additional function which constitutes the handling of plan funds under 29 CFR 464.7, the person would have to be bonded.

FR–9 Q: May an employee benefit plan purchase a bond covering plan officials?

A: Yes. The bonding requirement, which applies, with certain exceptions, to every plan official under section 412(a) of the Act, is for the protection of the plan and does not benefit any plan official or relieve any plan official of any obligation to the plan. The purchase of such bond by a plan will not, therefore, be considered to be in contravention of sections 406(a) or (b) of the Act.

FR–10 Q: An employee benefit plan is considering the construction of a building to house the administration of the plan. One trustee has proposed that the building be

constructed on a cost plus basis by a particular contractor without competitive bidding. When the trustee was questioned by another trustee as to the basis of choice of the contractor, the impact of the building on the plan's administrative costs, whether a cost plus contract would yield a better price to the plan than a fixed price basis, and why a negotiated contract would be better than letting the contract for competitive bidding, no satisfactory answers were provided. Several of the trustees have argued that letting such a contract would be a violation of their general fiduciary responsibilities. Despite their arguments, a majority of the trustees appear to be ready to vote to construct the building as proposed. What should the minority trustees do to protect themselves from liability under section 409(a) of the Act and section 405(b)(1)(A) of the Act?

A: Here, where a majority of trustees appear ready to take action which would clearly be contrary to the prudence requirement of section 404(a)(1)(B) of the Act, it is incumbent on the minority trustees to take all reasonable and legal steps to prevent the action. Such steps might include preparations to obtain an injunction from a Federal District court under section 502(a)(3) of the Act, to notify the Labor Department, or to publicize the vote if the decision is to proceed as proposed. If, having taken all reasonable and legal steps to prevent the imprudent action, the minority trustees have not succeeded, they will not incur liability for the action of the majority. Mere resignation, however, without taking steps to prevent the imprudent action, will not suffice to avoid liability for the minority trustees once they have knowledge that the imprudent action is under consideration.

More generally, trustees should take great care to document adequately all meetings where actions are taken with respect to management and control of fplan assets. Written minutes of all actions taken should be kept describing the action taken, and stating how each trustee voted on each matter. If, as in the case above, trustees object to a proposed action on the grounds of possible violation of the fiduciary responsibility provisions of the Act, the trustees so objecting should insist that their objections and the responses to such objections be included in the record of the meeting. It should be noted that, where a trustee believes that a cotrustee has already committed a breach, resignation by the trustee as a protest against such breach will not generally be considered sufficient to discharge the trustee's positive duty under section 405(a)(3) to make reasonable efforts under the circumstances to remedy the breach.

[40 FR 31599, July 28, 1975. Redesignated at 41 FR 1906, Jan. 13, 1976; 69 FR 52125, Aug. 24, 2004]

§ 2509.75–6 Interpretive bulletin relating to section 408(c)(2) of the Employee Retirement Income Security Act of 1974.

The Department of Labor today announced guidelines for determining when a party in interest with respect to an employee benefit plan may receive an advance for expenses to be incurred on behalf of the plan without engaging in a transaction prohibited by section 406 of the Employee Retirement Income Security Act of 1974. That section prohibits, among other things, any lending of money from a plan to a party in interest, or transfer to, or use by or for the benefit of, a party in interest of any assets of the plan, as well as any act whereby a fiduciary deals with the assets of a plan in his own interest or for his own account.

However, section 408(c)(2) of the Act provides that nothing in section 406 of the Act shall be construed to prohibit the reimbursement by a plan of expenses properly and actually incurred by a fiduciary in the performance of his duties with the plan. Questions have arisen under section 408(c)(2) of the Act as to whether a plan may reimburse a party in interest in the performance of his duties with the plan and as to whether a plan might make an advance to a fiduciary or other party in interest for expenses to be incurred in the future.

The Department of Labor views the relevant provisions of section 408(c)(2) as clarifying the scope of section 406 so as to permit reimbursement of fiduciaries for expenses incurred in the performance of their duties with a plan. Similarly, consistent with section 408(c)(2), section 406 is construed to permit the reimbursement by the plan of expenses properly and actually incurred by a party in interest in the performance of his duties with the plan.

If a plan makes an advance to a fiduciary or other party in interest to cover expenses to be properly and actually incurred by such person in the performance of his duties with the plan, a prohibited transaction within the meaning of section 406 shall not occur when the plan makes the advance if—

(a) The amount of such advance is reasonable with respect to the amount of the expense which is likely to be properly and actually incurred in the immediate future (such as during the next month), and

(b) The party in interest accounts to the plan at the end of the period covered by the advance for the expenses actually incurred (whether computed on the basis of actual expenses incurred or on the basis of actual transportation costs plus a reasonable per diem allowance, where appropriate).

It should be noted, however, that despite the reasonableness of the amount of the advance and of the expenses underlying it, the question of whether incurring such expenses

was prudent, and thus whether the advance was for reasonable expenses, is to be judged pursuant to section 404 of the Act (relating to fiduciary responsibilities).

[40 FR 31755, July 29, 1975. Redesignated at 41 FR 1906, Jan. 13, 1976]

§ 2509.75–8 Questions and answers relating to fiduciary responsibility under the Employee Retirement Income Security Act of 1974.

The Department of Labor today issued questions and answers relating to certain aspects of fiduciary responsibility under the Act, thereby supplementing ERISA IB 75–5 (29 CFR 2555.75–5) which was issued on June 24, 1975, and published in the FEDERAL REGISTER on July 28, 1975 (40 FR 31598).

Pending the issuance of regulations or other guidelines, persons may rely on the answers to these questions in order to resolve the issues that are specifically considered. No inferences should be drawn regarding issues not raised which may be suggested by a particular question and answer or as to why certain questions, and not others, are included. Furthermore, in applying the questions and answers, the effect of subsequent legislation, regulations, court decisions, and interpretive bulletins must be considered. To the extent that plans utilize or rely on these answers and the requirements of regulations subsequently adopted vary from the answers relied on, such plans may have to be amended.

An index of the questions and answers, relating them to the appropriate sections of the Act, is also provided.

INDEX

Key to question prefixes: D—refers to definitions; FR—refers to fiduciary responsibility.

Section No.	Question No.
3(21)(A)	D–2, D–3, D–4, D–5.
3(38)	FR–15.
402(c)(1)	FR–12.
402(c)(2)	FR–15.
402(c)(3)	FR–15.
403(a)(2)	FR–15.
404(a)(1)(B)	FR–11, FR–17.
405(a)	FR–13, FR–14, FR–16.
405(c)(1)	FR–12, FR–15.
405(c)(2)	D–4, FR–13, FR–14, FR–16.
412	D–2.

NOTE: Questions D–2, D–3, D–4, and D–5 relate to not only section 3(21)(A) of title I of the Act, but also section 4975(e)(3) of the Internal Revenue Code (section 2003 of the Act). The Internal Revenue Service has indicated its concurrence with the answers to these questions.

D–2 Q: Are persons who have no power to make any decisions as to plan policy, interpretations, practices or procedures, but who perform the following administrative functions for an employee benefit plan, within a framework of policies, interpretations, rules, practices and procedures made by other persons, fiduciaries with respect to the plan:

(1) Application of rules determining eligibility for participation or benefits;

(2) Calculation of services and compensation credits for benefits;

(3) Preparation of employee communications material;

(4) Maintenance of participants' service and employment records;

(5) Preparation of reports required by government agencies;

(6) Calculation of benefits;

(7) Orientation of new participants and advising participants of their rights and options under the plan;

(8) Collection of contributions and application of contributions as provided in the plan;

(9) Preparation of reports concerning participants' benefits;

(10) Processing of claims; and

(11) Making recommendations to others for decisions with respect to plan administration?

A: No. Only persons who perform one or more of the functions described in section 3(21)(A) of the Act with respect to an employee benefit plan are fiduciaries. Therefore, a person who performs purely ministerial functions such as the types described above for an employee benefit plan within a framework of policies, interpretations, rules, practices and procedures made by other persons is not a fiduciary because such person does not have discretionary authority or discretionary control respecting management of the plan, does not exercise any authority or control respecting management or disposition of the assets of the plan, and does not render investment advice with respect to any money or other property of the plan and has no authority or responsibility to do so.

However, although such a person may not be a plan fiduciary, he may be subject to the bonding requirements contained in section 412 of the Act if he handles funds or other property of the plan within the meaning of applicable regulations.

The Internal Revenue Service notes that such persons would not be considered plan fiduciaries within the meaning of section 4975(e)(3) of the Internal Revenue Code of 1954.

D–3 Q: Does a person automatically become a fiduciary with respect to a plan by reason of holding certain positions in the administration of such plan?

A: Some offices or positions of an employee benefit plan by their very nature require persons who hold them to perform one or more of the functions described in section

3(21)(A) of the Act. For example, a plan administrator or a trustee of a plan must, be the very nature of his position, have ''discretionary authority or discretionary responsibility in the administration'' of the plan within the meaning of section 3(21)(A)(iii) of the Act. Persons who hold such positions will therefore be fiduciaries.

Other offices and positions should be examined to determine whether they involve the performance of any of the functions described in section 3(21)(A) of the Act. For example, a plan might designate as a ''benefit supervisor'' a plan employee whose sole function is to calculate the amount of benefits to which each plan participant is entitled in accordance with a mathematical formula contained in the written instrument pursuant to which the plan is maintained. The benefit supervisor, after calculating the benefits, would then inform the plan administrator of the results of his calculations, and the plan administrator would authorize the payment of benefits to a particular plan participant. The benefit supervisor does not perform any of the functions described in section 3(21)(A) of the Act and is not, therefore, a plan fiduciary. However, the plan might designate as a ''benefit supervisor'' a plan employee who has the final authority to authorize or disallow benefit payments in cases where a dispute exists as to the interpretation of plan provisions relating to eligibility for benefits. Under these circumstances, the benefit supervisor would be a fiduciary within the meaning of section 3(21)(A) of the Act.

The Internal Revenue Service notes that it would reach the same answer to this question under section 4975(e)(3) of the Internal Revenue Code of 1954.

D–4 Q: In the case of a plan established and maintained by an employer, are members of the board of directors of the employer fiduciaries with respect to the plan?

A: Members of the board of directors of an employer which maintains an employee benefit plan will be fiduciaries only to the extent that they have responsibility for the functions described in section 3(21)(A) of the Act. For example, the board of directors may be responsible for the selection and retention of plan fiduciaries. In such a case, members of the board of directors exercise ''discretionary authority or discretionary control respecting management of such plan'' and are, therefore, fiduciaries with respect to the plan. However, their responsibility, and, consequently, their liability, is limited to the selection and retention of fiduciaries (apart from co-fiduciary liability arising under circumstances described in section 405(a) of the Act). In addition, if the directors are made named fiduciaries of the plan, their liability may be limited pursuant to a procedure provided for in the plan instrument for the allocation of fiduciary responsibilities among named fiduciaries or for the designation of persons other than named fiduciaries to carry out fiduciary responsibilities, as provided in section 405(c)(2).

The Internal Revenue Service notes that it would reach the same answer to this question under section 4975(e)(3) of the Internal Revenue Code of 1954.

D–5 Q: Is an officer or employee of an employer or employee organization which sponsors an employee benefit plan a fiduciary with respect to the plan solely by reason of holding such office or employment if he or she performs none of the functions described in section 3(21)(A) of the Act?

A: No, for the reasons stated in response to question D–2.

The Internal Revenue Service notes that it would reach the same answer to this question under section 4975(e)(3) of the Internal Revenue Code of 1954.

FR–11 Q: In discharging fiduciary responsibilities, may a fiduciary with respect to a plan rely on information, data, statistics or analyses provided by other persons who perform purely ministerial functions for such plan, such as those persons described in D–2 above?

A: A plan fiduciary may rely on information, data, statistics or analyses furnished by persons performing ministerial functions for the plan, provided that he has exercised prudence in the selection and retention of such persons. The plan fiduciary will be deemed to have acted prudently in such selection and retention if, in the exercise of ordinary care in such situation, he has no reason to doubt the competence, integrity or responsibility of such persons.

FR–12 Q: How many fiduciaries must an employee benefit plan have?

A: There is no required number of fiduciaries that a plan must have. Each plan must, of course, have at least one named fiduciary who serves as plan administrator and, if plan assets are held in trust, the plan must have at least one trustee. If these requirements are met, there is no limit on the number of fiduciaries a plan may have. A plan may have as few or as many fiduciaries as are necessary for its operation and administration. Under section 402(c)(1) of the Act, if the plan so provides, any person or group of persons may serve in more than one fiduciary capacity, including serving both as trustee and administrator. Conversely, fiduciary responsibilities not involving management and control of plan assets may, under section 405(c)(1) of the Act, be allocated among named fiduciaries and named fiduciaries may designate persons other than named fiduciaries to carry out such fiduciary responsibilities, if the plan instrument expressly provides procedures for such allocation or designation.

FR–13 Q: If the named fiduciaries of an employee benefit plan allocate their fiduciary

responsibilities among themselves in accordance with a procedure set forth in the plan for the allocation of responsibilities for operation and administration of the plan, to what extent will a named fiduciary be relieved of liability for acts and omissions of other named fiduciaries in carrying out fiduciary responsibilities allocated to them?

A: If named fiduciaries of a plan allocate responsibilities in accordance with a procedure for such allocation set forth in the plan, a named fiduciary will not be liable for acts and omissions of other named fiduciaries in carrying out fiduciary responsibilities which have been allocated to them, except as provided in section 405(a) of the Act, relating to the general rules of co-fiduciary responsibility, and section 405(c)(2)(A) of the Act, relating in relevant part to standards for establishment and implementation of allocation procedures.

However, if the instrument under which the plan is maintained does not provide for a procedure for the allocation of fiduciary responsibilities among named fiduciaries, any allocation which the named fiduciaries may make among themselves will be ineffective to relieve a named fiduciary from responsibility or liability for the performance of fiduciary responsibilities allocated to other named fiduciaries.

FR–14 Q: If the named fiduciaries of an employee benefit plan designate a person who is not a named fiduciary to carry out fiduciary responsibilities, to what extent will the named fiduciaries be relieved of liability for the acts and omissions of such person in the performance of his duties?

A: If the instrument under which the plan is maintained provides for a procedure under which a named fiduciary may designate persons who are not named fiduciaries to carry out fiduciary responsibilities, named fiduciaries of the plan will not be liable for acts and omissions of a person who is not a named fiduciary in carrying out the fiduciary responsibilities which such person has been designated to carry out, except as provided in section 405(a) of the Act, relating to the general rules of co-fiduciary liability, and section 405(c)(2)(A) of the Act, relating in relevant part to the designation of persons to carry out fiduciary responsibilities.

However, if the instrument under which the plan is maintained does not provide for a procedure for the designation of persons who are not named fiduciaries to carry out fiduciary responsibilities, then any such designation which the named fiduciaries may make will not relieve the named fiduciaries from responsibility or liability for the acts and omissions of the persons so designated.

FR–15 Q: May a named fiduciary delegate responsibility for management and control of plan assets to anyone other than a person who is an investment manager as defined in section 3(38) of the Act so as to be relieved of liability for the acts and omissions of the person to whom such responsibility is delegated?

A: No. Section 405(c)(1) does not allow named fiduciaries to delegate to others authority or discretion to manage or control plan assets. However, under the terms of sections 403(a)(2) and 402(c)(3) of the Act, such authority and discretion may be delegated to persons who are investment managers as defined in section 3(38) of the Act. Further, under section 402(c)(2) of the Act, if the plan so provides, a named fiduciary may employ other persons to render advice to the named fiduciary to assist the named fiduciary in carrying out his investment responsibilities under the plan.

FR–16 Q: Is a fiduciary who is not a named fiduciary with respect to an employee benefit plan personally liable for all phases of the management and administration of the plan?

A: A fiduciary with respect to the plan who is not a named fiduciary is a fiduciary only to the extent that he or she performs one or more of the functions described in section 3(21)(A) of the Act. The personal liability of a fiduciary who is not a named fiduciary is generally limited to the fiduciary functions, which he or she performs with respect to the plan. With respect to the extent of liability of a named fiduciary of a plan where duties are properly allocated among named fiduciaries or where named fiduciaries properly designate other persons to carry out certain fiduciary duties, see question FR–13 and FR–14.

In addition, any fiduciary may become liable for breaches of fiduciary responsibility committed by another fiduciary of the same plan under circumstances giving rise to co-fiduciary liability, as provided in section 405(a) of the Act.

FR–17 Q: What are the ongoing responsibilities of a fiduciary who has appointed trustees or other fiduciaries with respect to these appointments?

A: At reasonable intervals the performance of trustees and other fiduciaries should be reviewed by the appointing fiduciary in such manner as may be reasonably expected to ensure that their performance has been in compliance with the terms of the plan and statutory standards, and satisfies the needs of the plan. No single procedure will be appropriate in all cases; the procedure adopted may vary in accordance with the nature of the plan and other facts and circumstances relevant to the choice of the procedure.

[40 FR 47491, Oct. 9, 1975. Redesignated at 41 FR 1906, Jan. 13, 1976]

§ 2509.75–9 Interpretive bulletin relating to guidelines on independence of accountant retained by Employee Benefit Plan.

The Department of Labor today announced guidelines for determining when a qualified public accountant is independent for purposes of auditing and rendering an opinion on the financial information required to be included in the annual report filed with the Department.

Section 103(a)(3)(A) requires that the accountant retained by an employee benefit plan be ''independent'' for purposes of examining plan financial information and rendering an opinion on the financial statements and schedules required to be contained in the annual report.

Under the authority of section 103(a)(3)(A) the Department of Labor will not recognize any person as an independent qualified public accountant who is in fact not independent with respect to the employee benefit plan upon which that accountant renders an opinion in the annual report filed with the Department of Labor. For example, an accountant will not be considered independent with respect to a plan if:

(1) During the period of professional engagement to examine the financial statements being reported, at the date of the opinion, or during the period covered by the financial statements, the accountant or his or her firm or a member thereof had, or was committed to acquire, any direct financial interest or any material indirect financial interest in such plan, or the plan sponsor, as that term is defined in section 3(16)(B) of the Act.

(2) During the period of professional engagement to examine the financial statements being reported, at the date of the opinion, or during the period covered by the financial statements, the accountant, his or her firm or a member thereof was connected as a promoter, underwriter, investment advisor, voting trustee, director, officer, or employee of the plan or plan sponsor except that a firm will not be deemed not independent in regard to a particular plan if a former officer or employee of such plan or plan sponsor is employed by the firm and such individual has completely disassociated himself from the plan or plan sponsor and does not participate in auditing financial statements of the plan covering any period of his or her employment by the plan or plan sponsor. For the purpose of this bulletin the term ''member'' means all partners or shareholder employees in the firm and all professional employees participating in the audit or located in an office of the firm participating in a significant portion of the audit;

(3) An accountant or a member of an accounting firm maintains financial records for the employee benefit plan.

However, an independent, qualified public accountant may permissably engage in or have members of his or her firm engage in certain activities which will not have the effect of removing recognition of his or her independence. For example, (1) an accountant will not fail to be recognized as independent if at or during the period of his or her professional engagement with the employee benefit plan the accountant or his or her firm is retained or engaged on a professional basis by the plan sponsor, as that term is defined in section 3(16)(B) of the Act. However, to retain recognition of independence under such circumstances the accountant must not violate the prohibitions against recognition of independence established under paragraphs (1), (2) or (3) of this interpretive bulletin; (2) the rendering of services by an actuary associated with an accountant or accounting firm shall not impair the accountant's or accounting firm's independence. However, it should be noted that the rendering of services to a plan by an actuary and accountant employed by the same firm may constitute a prohibited transaction under section 406(a)(1)(C) of the Act. The rendering of such multiple services to a plan by a firm will be the subject of a later interpretive bulletin that will be issued by the Department of Labor.

In determining whether an accountant or accounting firm is not, in fact, independent with respect to a particular plan, the Department of Labor will give appropriate consideration to all relevant circumstances, including evidence bearing on all relationships between the accountant or accounting firm and that of the plan sponsor or any affiliate thereof, and will not confine itself to the relationships existing in connection with the filing of annual reports with the Department of Labor.

Further interpretive bulletins may be issued by the Department of Labor concerning the question of independence of an accountant retained by an employee benefit plan.

[40 FR 53998, Nov. 20, 1975, as amended at 40 FR 59728, Dec. 30, 1975. Redesignated at 41 FR 1906, Jan. 13, 1976]

§ 2509.75–10 Interpretive bulletin relating to the ERISA Guidelines and the Special Reliance Procedure.

On November 5, 1975, the Department of Labor (the ''Department'') and the Internal Revenue Service (the ''Service'') announced the publication of a compendium of authoritative rules (hereinafter referred to as the ''ERISA Guidelines'') relating to ERISA requirements. *See* T.I.R. No. 1415 (November 5, 1975) issued by the Service. These rules were published in recognition of the need to provide an immediate and complete set of interim guidelines to facilitate (1) adoption of

new employee pension benefit plans (hereinafter referred to as ''plans''), and (2) prompt amendment of existing plans, in conformance with the applicable requirements of the Employee Retirement Income Security Act of 1974 (''ERISA'') pending the issuance of final regulations or other rules. These rules govern the application of (1) the qualification requirements of the Internal Revenue Code of 1954 (the ''Code'') added or amended by ERISA, and (2) the requirements of the provisions of parts 2 and 3 of title I of ERISA paralleling such qualification requirements (both such sets of requirements hereinafter referred to collectively as the ''new qualification requirements'').

The ERISA Guidelines incorporate by reference the documents relating to the new qualification requirements heretofore published by the Department and by the Service as temporary or proposed regulations, revenue rulings, revenue procedures, questions and answers, technical information releases, and other issuances. The ERISA Guidelines also incorporate additional documents published on November 5, 1975, or to be published forthwith, which are necessary to complete the interim guidelines relating to the new qualification requirements. See the schedule set forth below for a complete list and brief description of the documents comprising the ERISA Guidelines.

The Department and the Service emphasized that the ERISA Guidelines constitute the entire set of interim rules of the Department and the Service for satisfying the new qualification requirements, and thus provide authoritative guidance in respect of the new statutory requirements bearing on qualification. These rules are applicable to individually designed plans and to multiemployer (or other multiple employer) plans, and may be relied upon until amended or supplemented by final regulations or other rules. Moreover, the Department and the Service announced that any provisions of final regulations or other rules which amend or supplement the rules contained in the ERISA Guidelines will generally be prospective only, from the date of publication. Further, in the case of employee plan provisions adopted or amended before the date of such publication which satisfy the ERISA Guidelines, such final regulations or other rules will generally be made effective for plan years commencing after such date, except in unusual circumstances.

The Service further announced that the ERISA Guidelines incorporate the procedures that will enable employers to obtain determination letters as to the qualification of pension, annuity, profit sharing, stock bonus and bond purchase plans which satisfy the requirements of sections 401(a), 403(a) and 405(a) of the Code, as amended by ERISA. The Service also pointed out that the ERISA Guidelines will enable sponsors of master and prototype plans (whether newly established or amended) to obtain opinion letters as to the acceptability of the form of such plans, and further, that employers who establish plans designed to meet the requirements of section 301(d) of the Tax Reduction Act of 1975 (relating to employee stock ownership plans) will be able to obtain determination letters as to the acceptability of such plans (whether or not such plans are intended to be qualified).

To facilitate further the adoption of new plans and the prompt amendment of existing plans in conformance with the new qualification requirements, the Service announced on November 5, 1975, the adoption of a special procedure (hereinafter referred to as the ''Special Reliance Procedure'') pursuant to which the adoption, on or before May 30, 1976, of new plans and amendments of existing plans may be effectuated with full reliance upon the rules which comprise the ERISA Guidelines and without regard to any amendment or supplementation of such rules before such date. Therefore, except in unusual circumstances (described in Technical Information Release No. 1416 (November 5, 1975)), plans which comply with the Special Reliance Procedure shall generally be considered by the Service as satisfying the qualification requirements of the Code added or amended by ERISA for plan years commencing on or before December 31, 1976, to which such requirements are applicable, notwithstanding the date when final regulations or other rules hereafter published which amend or supplement the rules comprising the ERISA Guidelines may otherwise be made effective. Reference is hereby made to Technical Information Release No. 1416 (November 5, 1975) for a description of the Special Reliance Procedure.

The Department announced that plans which comply with the Special Reliance Procedure will be considered by the Department as satisfying the requirements of the provisions of parts 2 and 3 of title I of ERISA which parallel the qualification requirements of the Code added or amended by ERISA to the same extent as such plans are considered by the Service as satisfying, in accordance with the terms of the Special Reliance Procedure, such qualification requirements.

The availability of the Special Reliance Procedure will substantially diminish the occasions for plans to avail themselves of the right to satisfy, for tax purposes, the qualification requirements of the Code (added or amended by ERISA) by retroactive amendments adopted during or after the close of a plan year, in accordance with section 401(b) of the Code and the temporary regulations thereunder. The Department pointed out that no explicit parallel provision to section 401(b) of the Code is contained in title I of

ERISA. Nevertheless, to the extent retroactive amendments to a plan are made to satisfy the requirements of parts 2 and 3 of title I of ERISA which parallel the qualification requirements of the Code added or amended by ERISA, the Department noted that such plan will be in compliance with such requirements if such an amendment designed to satisfy such requirements (1) is adopted by the end of the plan year to which such requirements are applicable, and (2) is made effective for all purposes for such entire plan year.

The schedule of documents comprising the ERISA Guidelines follows.

ERISA GUIDELINES—SCHEDULE OF DOCUMENTS

Publication date 1975	Document	Subject	Code and ERISA sections
Jan. 8	TIR 1334	Questions and answers relating to defined contribution plans subject to ERISA.	410, 411, et al.
Apr. 21	40 FR 17576	Notice of proposed rulemaking: Qualification (and other aspects) of HR–10 plans.	401(c), 401(d), 401(e), 46, 50A, 72, 404(e), 901, and 1379.
June 4	T.D. 7358	Temporary regulations: Notification of interested parties.	7476.
July 14	T.D. 7367	Temporary regulations: Notice of determination of qualification.	7476.
Sept. 8	40 FR 41654	Department of Labor—Minimum standards for hours of service, years of service, and breaks in service relating to participation, vesting, and accrual of benefits.	401(a)(3)(B), 411(a)(5)(C), and ERISA secs. 202, 203, and 204.
Sept. 17	TIR 1403	Questions and answers relating mainly to defined benefit plans subject to ERISA (addition to TIR 1334).	410, 411, et al.
Sept. 18	40 FR 43034	Notice of proposed rulemaking: Definitions of multi-employer plan and plan administrator.	414(f) and (g).
Sept. 29	T.D. 7377	Temporary regulations: Certain retroactive amendments of employee plans.	401(b).
Oct. 3	T.D. 7379	Temporary regulations: Qualified joint and survivor annuities.	401(a)(11).
	T.D. 7380	Temporary regulations: Minimum participation standards.	410.
Oct. 8	T.D. 7381	Temporary regulations: Commencement of benefits.	401(a)(14).
Oct. 15	T.D. 7382	Temporary regulations: Requirement that benefits under a qualified plan are not decreased on account of certain social security increases.	401(a)(15).
Oct. 16	T.D. 7383	Temporary regulations: Nonbank trustees of pension and profit sharing trusts benefiting owner-employees.	401(d)(1).
	40 FR 48517	Notice of proposed rulemaking: Certain custodial accounts.	401(f).
Oct. 30	TIR 1408	Questions and answers relating to mergers, consolidations, etc.	401(a)(12) and 414(1).
Nov. 3	Rev. Rul. 75–480, 1975–44 IRB.	Updating of Rev. Rul. 71–446 to reflect changes mandated by ERISA.	401(a)(5).
	Rev. Rul. 75–481, 1975–44 IRB.	Guidelines for determining whether contributions or benefits under plan satisfy the limitations of sec. 415 of the code.	401(a)(16) and 415.
	TIR 1411, Rev. Proc. 75–49, 1975–48 IRB.	Vesting and discrimination	401(a)(4) and 411(d)(1).
Nov. 4	TIR 1413	Questions and answers relating to employee stock ownership plans.	401, 4975, and sec. 301(d) of the Tax Reduction Act of 1975.
Nov. 5	T.D. 7387	Temporary regulations on minimum vesting standards.	411.
	T.D. 7388	Controlled groups, businesses under common control, etc.	414(b) and (c).
(1)	TIR	Nonforfeiture of employee derived accrued benefit upon death.	411(a)(1).
(1)		Department of Labor—Interpretive bulletin: Definition of seasonal industries.	410(a)(3)(B), 411(a)(5)(C), and ERISA secs. 202(a)(3)(C), 203(b)(2)(C).
Nov. 7	40 FR 52008	Department of Labor—additional requirements applicable to definition of multiemployer plan.	414(f) and ERISA sec. 3(37).
(1)		Department of Labor—suspension of benefits upon reemployment of retiree.	411(a)(3)(B) and ERISA sec. 203(a)(3)(A).
Dec. 3	TIR 1422	Assignment or alienation of plan benefits	401(a)(13).

ERISA GUIDELINES—SCHEDULE OF DOCUMENTS—Continued

Publication date 1975	Document	Subject	Code and ERISA sections
Dec. 9	TIR 1424, Rev. Proc. 76–1, 1976–1 IRB..	Vesting and discrimination	401(a)(4) and 411(d)(1).
([1])	TIR, Rev. Rul	Appropriate conversion factor	411(c)(2)(B)(ii).

[1] To be published forthwith.

[41 FR 3289, Jan. 22, 1976]

§ 2509.78–1 Interpretive bulletin relating to payments by certain employee welfare benefit plans.

The Department of Labor today announced its interpretation of certain provisions of part 4 of title I of the Employee Retirement Income Security Act of 1974 (ERISA), as those sections apply to a payment by multiple employer vacation plans of a sum of money to which a participant of beneficiary of the plan is entitled to a party other than the participant or beneficiary.[1]

Section 402(b)(4) of ERISA requires every employee benefit plan to specify the basis on which payments are made to and from the plan.

Section 403(c)(1) of ERISA generally requires the assets of an employee benefit plan to be held for the exclusive purpose of providing benefits to participants in the plan and their beneficiaries[2] and defraying reasonable expenses of administering the plan. Similarly, section 404(a)(1)(A) requires a plan fiduciary to discharge his duties with respect to a plan solely in the interest of the participants and beneficiaries of the plan and for the exclusive purpose of providing benefits to participants and their beneficiaries and defraying reasonable expenses of administering the plan. Section 404(a)(1)(D) further requires the fiduciary to act in accordance with the documents and instruments governing the plan insofar as such documents and instruments are consistent with the provisions of title I of ERISA.

In addition, section 406(a) of ERISA specifically prohibits a fiduciary with respect to a plan from causing the plan to engage in a transaction if he knows or should know that such transaction constitutes, *inter alia*, a direct or indirect: furnishing of goods, services or facilities between the plan and a party in interest (section 406(a)(1)(C)); or transfer to, or use by or for the benefit of, a party in interest of any assets of the plan (section 406(a)(1)(D)). Section 406(b)(2) of ERISA prohibits a plan fiduciary from acting in any transaction involving the plan on behalf of a party, or representing a party, whose interests are adverse to the interests of the plan or of its participants or beneficiaries.

In this regard, however, Prohibited Transaction Exemptions 76–1, Part C, (41 FR 12740, March 26, 1976) and 77–10 (42 FR 33918, July 1, 1977) exempt from the prohibitions of section 406(a) and 406(b)(2), respectively, the provision of administrative services by a multiple employer plan if specified conditions are met. These conditions are: (a) the plan receives reasonable compensation for the provision of the services (for purposes of the exemption, ''reasonable compensation'' need not include a profit which would ordinarily have been received in an arm's length transaction, but must be sufficient to reimburse the plan for its costs); (b) the arrangement allows any multiple employer plan which is a party to the transaction to terminate the relationship on a reasonably short notice under the circumstances; and (c) the plan complies with certain recordkeeping requirements. It should be noted that plans not subject to Prohibited Transaction Exemptions 76–1 and 77–10—i.e., plans that are not multiple employer plans—cannot rely upon these exemptions.

A payment by a vacation plan of all or any portion of benefits to which a plan participant or beneficiary is entitled to a party other than the participant or beneficiary will comply with the above-mentioned sections of ERISA if the arrangement pursuant to which payments are made does not constitute a prohibited transaction under ERISA and:

(1) The plan documents expressly state that benefits payable under the plan to a participant or beneficiary may, at the direction of the participant or beneficiary, be paid to a third party rather than to the participant or beneficiary;

[1] Multiple employer vacation plans generally consist of trust funds to which employers are obligated to make contributions pursuant to collective bargaining agreements. Benefits are generally paid at specified intervals (usually annually or semi-annually) and such benefits are neither contingent upon the occurrence of a specified event nor restricted to use for a specified purpose when paid to the participant.

[2] Section 403 (c) and (d) provide certain exceptions to this requirement, not here relevant.

(2) The participant or beneficiary directs in writing that the plan trustee(s) shall pay a named third party all or a specified portion of the sum of money which would otherwise be paid under the plan to him or her; and

(3) A payment is made to a third party only when or after the money would otherwise be payable to the plan participant or beneficiary.

In the case of a multiple employer plan (as defined in Prohibited Transaction Exemption 76–1, Part C, Section III), if the arrangement to make payments to a third party is a prohibited transaction under ERISA, the arrangement will comply with the abovementioned sections of ERISA if the conditions of Prohibited Transaction Exemptions 76–1, Part C, and 77–10 and the above three paragraphs are met. In this regard, it is the view of the Department that the mere payment of money to which a participant or beneficiary is entitled, at the direction of the participant or beneficiary, to a third party who is a party in interest would not constitute a transfer of plan assets prohibited under section 406(a)(1)(D). It is also the view of the Department that if a trustee or other fudiciary of a plan, in addition to his duties with respect to the plan, serves in a decisionmaking capacity with another party, the mere fact that the fiduciary effects payments to such party of money to which a participant is entitled at the direction of the participant and in accordance with specific provisions of governing plan documents and instruments, does not amount to a prohibited transaction under section 406(b)(2).

It should be noted that the interpretation set forth herein deals solely with the application of the provisions of title I of ERISA to the arrangements described herein. It does not deal with the application of any other statute to such arrangements. Specifically, no opinion is expressed herein as to the application of section 302 of the Labor Management Relations Act, 1947 or the Internal Revenue Code of 1954 (particularly the provisions of section 501(c)(9) of the Code).

[43 FR 58565, Dec. 15, 1978]

§ 2509.94–3 Interpretive bulletin relating to in-kind contributions to employee benefit plans.

(a) *General.* This bulletin sets forth the views of the Department of Labor (the Department) concerning in-kind contributions (*i.e.,* contributions of property other than cash) in satisfaction of an obligation to contribute to an employee benefit plan to which part 4 of title I of the Employee Retirement Income Security Act of 1974 (ERISA) or a plan to which section 4975 of the Internal Revenue Code (the Code) applies. (For purposes of this document the term ''plan'' shall refer to either or both types of such entities as appropriate). Section 406(a)(1)(A) of ERISA provides that a fiduciary with respect to a plan shall not cause the plan to engage in a transaction if the fiduciary knows or should know that the transaction constitutes a direct or indirect sale or exchange of any property between a plan and a ''party in interest'' as defined in section 3(14) of ERISA. The Code imposes a two-tier excise tax under section 4975(c)(1)(A) an any direct or indirect sale or exchange of any property between a plan and a ''disqualified person'' as defined in section 4975(e)(2) of the Code. An employer or employee organization that maintains a plan is included within the definitions of ''party in interest'' and ''disqualified person.''[1]

In *Commissioner of Internal Revenue* v. *Keystone Consolidated Industries, Inc.,* ____ U.S. ____, 113 S. Ct. 2006 (1993), the Supreme Court held that an employer's contribution of unencumbered real property to a tax-qualified defined benefit pension plan was a sale or exchange prohibited under section 4975 of the Code where the stated fair market value of the property was credited against the employer's obligation to the defined benefit pension plan. The parties stipulated that the property was contributed to the plan free of encumbrances and the stated fair market value of the property was not challenged. 113 S. Ct. at 2009. In reaching its holding the Court construed section 4975(f)(3) of the Code (and therefore section 406(c) of ERISA), regarding transfers of encumbered property, not as a limitation but rather as extending the reach of section 4975(c)(1)(A) of the Code (and thus section 406(a)(1)(A) of ERISA) to include contributions of encumbered property that do not satisfy funding obligations. *Id.* at 2013. Accordingly, the Court concluded that the contribution of unencumbered property was prohibited under section 4975(c)(1)(A) of the Code (and thus section 406(a)(1)(A) of ERISA) as ''at least both an indirect type of sale and a form of exchange, since the property is exchanged for diminution of the employer's funding obligation.'' 113 S. Ct. at 2012.

(b) *Defined benefit plans.* Consistent with the reasoning of the Supreme Court in *Keystone,* because an employer's or plan sponsor's in-kind contribution to a defined benefit pension plan is credited to the plan's

[1] Under Reorganization Plan No. 4 of 1978 (43 FR 47713, October 17, 1978), the authority of the Secretary of the Treasury to issue rulings under the prohibited transactions provisions of section 4975 of the Code has been transferred, with certain exceptions not here relevant, to the Secretary of Labor. Except with respect to the types of plans covered, the prohibited transaction provisions of section 406 of ERISA generally parallel the prohibited transaction of provisions of section 4975 of the Code.

funding standard account it would constitute a transfer to reduce an obligation of the sponsor or employer to the plan. Therefore, in the absence of an applicable exemption, such a contribution would be prohibited under section 406(a)(1)(A) of ERISA and section 4975(c)(1)(A) of the Code. Such an in-kind contribution would constitute a prohibited transaction even if the value of the contribution is in excess of the sponsor's or employer's funding obligation for the plan year in which the contribution is made and thus is not used to reduce the plan's accumulated funding deficiency for that plan year because the contribution would result in a credit against funding obligations which might arise in the future.

(c) *Defined contribution and welfare plans.* In the context of defined contribution pension plans and welfare plans, it is the view of the Department that an in-kind contribution to a plan that reduces an obligation of a plan sponsor or employer to make a contribution measured in terms of cash amounts would constitute a prohibited transaction under section 406(a)(1)(A) of ERISA (and section 4975(c)(1)(A) of the Code) unless a statutory or administrative exemption under section 408 of ERISA (or sections 4975(c)(2) or (d) of the Code) applies. For example, if a profit sharing plan required the employer to make annual contributions ''in cash or in kind'' equal to a given percentage of the employer's net profits for the year, an in-kind contribution used to reduce this obligation would constitute a prohibited transaction in the absence of an exemption because the amount of the contribution obligation is measured in terms of cash amounts (a percentage of profits) even though the terms of the plan purport to permit in-kind contributions.

Conversely, a transfer of unencumbered property to a welfare benefit plan that does not relieve the sponsor or employer of any present or future obligation to make a contribution that is measured in terms of cash amounts would not constitute a prohibited transaction under section 406(a)(1)(A) of ERISA or section 4975(c)(1)(A) of the Code. The same principles apply to defined contribution plans that are not subject to the minimum funding requirements of section 302 of ERISA or section 412 of the Code. For example, where a profit sharing or stock bonus plan, by its terms, is funded solely at the discretion of the sponsoring employer, and the employer is not otherwise obligated to make a contribution measured in terms of cash amounts, a contribution of unencumbered real property would not be a prohibited sale or exchange between the plan and the employer. If, however, the same employer had made an enforceable promise to make a contribution measured in terms of cash amounts to the plan, a subsequent contribution of unencumbered real property made to offset such an obligation would be a prohibited sale or exchange.

(d) *Fiduciary standards.* Independent of the application of the prohibited transaction provisions, fiduciaries of plans covered by part 4 of title I of ERISA must determine that acceptance of an in-kind contribution is consistent with ERISA's general standards of fiduciary conduct. It is the view of the Department that acceptance of an in-kind contribution is a fiduciary act subject to section 404 of ERISA. In this regard, sections 406(a)(1)(A) and (B) of ERISA require that fiduciaries discharge their duties to a plan solely in the interests of the participants and beneficiaries, for the exclusive purpose of providing benefits and defraying reasonable administrative expenses, and with the care, skill, prudence, and diligence under the circumstances then prevailing that a prudent person acting in a like capacity and familiar with such matters would use in the conduct of an enterprise of a like character and with like aims. In addition, section 406(a)(1)(C) requires generally that fiduciaries diversify plan assets so as to minimize the risk of large losses. Accordingly, the fiduciaries of a plan must act ''prudently,'' ''solely in the interest'' of the plan's participants and beneficiaries and with a view to the need to diversify plan assets when deciding whether to accept in-kind contributions. If accepting an in-kind contribution is not ''prudent,'' not ''solely in the interest'' of the participants and beneficiaries of the plan, or would result in an improper lack of diversification of plan assets, the responsible fiduciaries of the plan would be liable for any losses resulting from such a breach of fiduciary responsibility, even if a contribution in kind does not constitute a prohibited transaction under section 406 of ERISA. In this regard, a fiduciary should consider any liabilities appurtenant to the in-kind contribution to which the plan would be exposed as a result of acceptance of the contribution.

[59 FR 66736, Dec. 28, 1994]

§ 2509.95–1 Interpretive bulletin relating to the fiduciary standards under ERISA when selecting an annuity provider for a defined benefit pension plan.

(a) Scope. This Interpretive Bulletin provides guidance concerning certain fiduciary standards under part 4 of title I of the Employee Retirement Income Security Act of 1974 (ERISA), 29 U.S.C. 1104–1114, applicable to the selection of an annuity provider for the purpose of benefit distributions from a defined benefit pension plan (hereafter ''pension plan'') when the pension plan intends to transfer liability for benefits to an annuity

provider. For guidance applicable to the selection of an annuity provider for benefit distributions from an individual account plan see 29 CFR 2550.404a–4.

(b) In General. Generally, when a pension plan purchases an annuity from an insurer as a distribution of benefits, it is intended that the plan's liability for such benefits is transferred to the annuity provider. The Department's regulation defining the term ''participant covered under the plan'' for certain purposes under title I of ERISA recognizes that such a transfer occurs when the annuity is issued by an insurance company licensed to do business in a State. 29 CFR 2510.3–3(d)(2)(ii). Although the regulation does not define the term ''participant'' or ''beneficiary'' for purposes of standing to bring an action under ERISA § 502(a), 29 U.S.C. 1132(a), it makes clear that the purpose of a benefit distribution annuity is to transfer the plan's liability with respect to the individual's benefits to the annuity provider.

Pursuant to ERISA section 404(a)(1), 29 U.S.C. 1104(a)(1), fiduciaries must discharge their duties with respect to the plan solely in the interest of the participants and beneficiaries. Section 404(a)(1)(A), 29 U.S.C. 1104(a)(1)(A), states that the fiduciary must act for the exclusive purpose of providing benefits to the participants and beneficiaries and defraying reasonable plan administration expenses. In addition, section 404(a)(1)(B), 29 U.S.C. 1104(a)(1)(B), requires a fiduciary to act with the care, skill, prudence and diligence under the prevailing circumstances that a prudent person acting in a like capacity and familiar with such matters would use.

(c) Selection of Annuity Providers. The selection of an annuity provider for purposes of a pension benefit distribution, whether upon separation or retirement of a participant or upon the termination of a plan, is a fiduciary decision governed by the provisions of part 4 of title I of ERISA. In discharging their obligations under section 404(a)(1), 29 U.S.C. 1104(a)(1), to act solely in the interest of participants and beneficiaries and for the exclusive purpose of providing benefits to the participants and beneficiaries as well as defraying reasonable expenses of administering the plan, fiduciaries choosing an annuity provider for the purpose of making a benefit distribution must take steps calculated to obtain the safest annuity available, unless under the circumstances it would be in the interests of participants and beneficiaries to do otherwise. In addition, the fiduciary obligation of prudence, described at section 404(a)(1)(B), 29 U.S.C. 1104(a)(1)(B), requires, at a minimum, that plan fiduciaries conduct an objective, thorough and analytical search for the purpose of identifying and selecting providers from which to purchase annuities. In conducting such a search, a fiduciary must evaluate a number of factors relating to a potential annuity provider's claims paying ability and creditworthiness. Reliance solely on ratings provided by insurance rating services would not be sufficient to meet this requirement. In this regard, the types of factors a fiduciary should consider would include, among other things:

(1) The quality and diversification of the annuity provider's investment portfolio;

(2) The size of the insurer relative to the proposed contract;

(3) The level of the insurer's capital and surplus;

(4) The lines of business of the annuity provider and other indications of an insurer's exposure to liability;

(5) The structure of the annuity contract and guarantees supporting the annuities, such as the use of separate accounts;

(6) The availability of additional protection through state guaranty associations and the extent of their guarantees. Unless they possess the necessary expertise to evaluate such factors, fiduciaries would need to obtain the advice of a qualified, independent expert. A fiduciary may conclude, after conducting an appropriate search, that more than one annuity provider is able to offer the safest annuity available.

(d) Costs and Other Considerations. The Department recognizes that there are situations where it may be in the interest of the participants and beneficiaries to purchase other than the safest available annuity. Such situations may occur where the safest available annuity is only marginally safer, but disproportionately more expensive than competing annuities, and the participants and beneficiaries are likely to bear a significant portion of that increased cost. For example, where the participants in a terminating pension plan are likely to receive, in the form of increased benefits, a substantial share of the cost savings that would result from choosing a competing annuity, it may be in the interest of the participants to choose the competing annuity. It may also be in the interest of the participants and beneficiaries to choose a competing annuity of the annuity provider offering the safest available annuity is unable to demonstrate the ability to administer the payment of benefits to the participants and beneficiaries. The Department notes, however, that increased cost or other considerations could never justify putting the benefits of annuitized participants and beneficiaries at risk by purchasing an unsafe annuity.

In contrast to the above, a fiduciary's decision to purchase more risky, lower-priced annuities in order to ensure or maximize a reversion of excess assets that will be paid solely to the employer-sponsor in connection with the termination of an over-funded pension plan would violate the fiduciary's duties under ERISA to act solely in the interest of the plan participants and beneficiaries. In

such circumstances, the interests of those participants and beneficiaries who will receive annuities lies in receiving the safest annuity available and other participants and beneficiaries have no countervailing interests. The fiduciary in such circumstances must make diligent efforts to assure that the safest available annuity is purchased.

Similarly, a fiduciary may not purchase a riskier annuity solely because there are insufficient assets in a defined benefit plan to purchase a safer annuity. The fiduciary may have to condition the purchase of annuities on additional employer contributions sufficient to purchase the safest available annuity.

(e) Conflicts of Interest. Special care should be taken in reversion situations where fiduciaries selecting the annuity provider have an interest in the sponsoring employer which might affect their judgment and therefore create the potential for a violation of ERISA § 406(b)(1). As a practical matter, many fiduciaries have this conflict of interest and therefore will need to obtain and follow independent expert advice calculated to identify those insurers with the highest claims-paying ability willing to write the business.

[60 FR 12329, Mar. 6, 1995, as amended at 72 FR 52006, Sept. 12, 2007; 73 FR 58447, Oct. 7, 2008]

§ 2509.96–1 Interpretive bulletin relating to participant investment education.

(a) *Scope*. This interpretive bulletin sets forth the Department of Labor's interpretation of section 3(21)(A)(ii) of the Employee Retirement Income Security Act of 1974, as amended (ERISA), and 29 CFR 2510.3–21(c) as applied to the provision of investment-related educational information to participants and beneficiaries in participant-directed individual account pension plans (*i.e.*, pension plans that permit participants and beneficiaries to direct the investment of assets in their individual accounts, including plans that meet the requirements of the Department's regulations at 29 CFR 2550.404c–1).

(b) *General*. Fiduciaries of an employee benefit plan are charged with carrying out their duties prudently and solely in the interest of participants and beneficiaries of the plan, and are subject to personal liability to, among other things, make good any losses to the plan resulting from a breach of their fiduciary duties. ERISA sections 403, 404 and 409, 29 U.S.C. 1103, 1104, and 1109. Section 404(c) of ERISA provides a limited exception to these rules for a pension plan that permits a participant or beneficiary to exercise control over the assets in his or her individual account. The Department of Labor's regulation, at 29 CFR 2550.404c–1, describes the kinds of plans to which section 404(c) applies, the circumstances under which a participant or beneficiary will be considered to have exercised independent control over the assets in his or her account, and the consequences of a participant's or beneficiary's exercise of such control.[1]

With both an increase in the number of participant-directed individual account plans and the number of investment options available to participants and beneficiaries under such plans, there has been an increasing recognition of the importance of providing participants and beneficiaries, whose investment decisions will directly affect their income at retirement, with information designed to assist them in making investment and retirement-related decisions appropriate to their particular situations. Concerns have been raised, however, that the provision of such information may in some situations be viewed as rendering ''investment advice for a fee or other compensation,'' within the meaning of ERISA section 3(21)(A)(ii), thereby giving rise to fiduciary status and potential liability under ERISA for investment decisions of plan participants and beneficiaries.

In response to these concerns, the Department of Labor is clarifying herein the applicability of ERISA section 3(21)(A)(ii) and 29 CFR 2510.3–21(c) to the provision of investment-related educational information to participants and beneficiaries in participant directed individual account plans.[2] In providing this clarification, the Department

[1] The section 404(c) regulation conditions relief from fiduciary liability on, among other things, the participant or beneficiary being provided or having the opportunity to obtain sufficient investment information regarding the investment alternatives available under the plan in order to make informed investment decisions. Compliance with this condition, however, does not require that participants and beneficiaries be offered or provided either investment advice or investment education, e.g., regarding general investment principles and strategies, to assist them in making investment decisions. 29 CFR 2550.404c–1(c)(4).

[2] Issues relating to the circumstances under which information provided to participants and beneficiaries may affect a participant's or beneficiary's ability to exercise independent control over the assets in his or her account for purposes of relief from fiduciary liability under ERISA section 404(c) are beyond the scope of this interpretive bulletin. Accordingly, no inferences should be drawn regarding such issues. See 29 CFR 2550.404c–1(c)(2). It is the view of the Department, however, that the provision of investment-related information and material to participants and beneficiaries in accordance

does not address the ''fee or other compensation, direct or indirect,'' which is a necessary element of fiduciary status under ERISA section 3(21)(A)(ii).[3]

(c) *Investment Advice.* Under ERISA section 3(21)(A)(ii), a person is considered a fiduciary with respect to an employee benefit plan to the extent that person ''renders investment advice for a fee or other compensation, direct or indirect, with respect to any moneys or other property of such plan, or has any authority to do so * * *.'' The Department issued a regulation, at 29 CFR 2510.3–21(c), describing the circumstances under which a person will be considered to be rendering ''investment advice'' within the meaning of section 3(21)(A)(ii). Because section 3(21)(A)(ii) applies to advice with respect to ''any moneys or other property'' of a plan and 29 CFR 2510.3–21(c) is intended to clarify the application of that section, it is the view of the Department of Labor that the criteria set forth in the regulation apply to determine whether a person renders ''investment advice'' to a pension plan participant or beneficiary who is permitted to direct the investment of assets in his or her individual account.

Applying 29 CFR 2510.3–21(c) in the context of providing investment-related information to participants and beneficiaries of participant-directed individual account pension plans, a person will be considered to be rendering ''investment advice,'' within the meaning of ERISA section 3(21)(A)(ii), to a participant or beneficiary only if: (i) the person renders advice to the participant or beneficiary as to the value of securities or other property, or makes recommendations as to the advisability of investing in, purchasing, or selling securities or other property (2510.3–21(c)(1)(i); and (ii) the person, either directly or indirectly, (A) has discretionary authority or control with respect to purchasing or selling securities or other property for the participant or beneficiary (2510.3–21(c)(1)(ii)(A)), or (B) renders the advice on a regular basis to the participant or beneficiary, pursuant to a mutual agreement, arrangement or understanding (written or otherwise) with the participant or beneficiary that the advice will serve as a primary basis for the participant's or beneficiary's investment decisions with respect to plan assets and that such person will render individualized advice based on the particular needs of the participant or beneficiary (2510.3–21(c)(1)(ii)(B)).[4]

Whether the provision of particular investment-related information or materials to a participant or beneficiary constitutes the rendering of ''investment advice,'' within the meaning of 29 CFR 2510.3–21(c)(1), generally can be determined only by reference to the facts and circumstances of the particular case with respect to the individual plan participant or beneficiary. To facilitate such determinations, however, the Department of Labor has identified, in paragraph (d), below, examples of investment-related information and materials which if provided to plan participants and beneficiaries would not, in the view of the Department, result in the rendering of ''investment advice'' under ERISA section 3(21)(A)(ii) and 29 CFR 2510.3–21(c).

(d) *Investment Education.* For purposes of ERISA section 3(21)(A)(ii) and 29 CFR 2510.3–21(c), the Department of Labor has determined that the furnishing of the following categories of information and materials to a participant or beneficiary in a participant-directed individual account pension plan will not constitute the rendering of ''investment advice,'' irrespective of who provides the information (e.g., plan sponsor, fiduciary or service provider), the frequency with which the information is shared, the form in which the information and materials are provided (e.g., on an individual or group basis, in writing or orally, or via video or computer software), or whether an identified category of information and materials is furnished alone or in combination with other identified categories of information and materials.

(1) *Plan Information.* (i) Information and materials that inform a participant or beneficiary about the benefits of plan participation, the benefits of increasing plan contributions, the impact of preretirement withdrawals on retirement income, the terms of the plan, or the operation of the plan; or

(ii) information such as that described in 29 CFR 2550.404c-1(b)(2)(i) on investment alternatives under the plan (e.g., descriptions of investment objectives and philosophies, risk and return characteristics, historical return information, or related prospectuses).[5]

---

with paragraph (d) of this interpretive bulletin will not, in and of itself, affect the availability of relief under section 404(c).

[3]The Department has expressed the view that, for purposes of section 3(21)(A)(ii), such fees or other compensation need not come from the plan and should be deemed to include all fees or other compensation incident to the transaction in which the investment advise has been or will be rendered. See A.O. 83–60A (Nov. 21, 1983); *Reich* v. *McManus,* 883 F. Supp. 1144 (N.D. Ill. 1995).

[4]This IB does not address the application of 29 CFR 2510.3–21(c) to communications with fiduciaries of participant-directed individual account pension plan plans.

[5]Descriptions of investment alternatives under the plan may include information relating to the generic asset class (*e,g,,* equities, bonds, or cash) of the investment alternatives. 29 CFR 2550.404c–1 (b)(2)(i)(B)(*1*)(*ii*).

The information and materials described above relate to the plan and plan participation, without reference to the appropriateness of any individual investment option for a particular participant or beneficiary under the plan. The information, therefore, does not contain either ''advice'' or ''recommendations'' within the meaning of 29 CFR 2510.3–21(c)(1)(i). Accordingly, the furnishing of such information would not constitute the rendering of ''investment advice'' for purposes of section 3(21)(A)(ii) of ERISA.

(2) *General Financial and Investment Information*. Information and materials that inform a participant or beneficiary about: (i) General financial and investment concepts, such as risk and return, diversification, dollar cost averaging, compounded return, and tax deferred investment; (ii) historic differences in rates of return between different asset classes (e.g., equities, bonds, or cash) based on standard market indices; (iii) effects of inflation; (iv) estimating future retirement income needs; (v) determining investment time horizons; and (vi) assessing risk tolerance.

The information and materials described above are general financial and investment information that have no direct relationship to investment alternatives available to participants and beneficiaries under a plan or to individual participants or beneficiaries. The furnishing of such information, therefore, would not constitute rendering ''advice'' or making ''recommendations'' to a participant or beneficiary within the meaning of 29 CFR 2510.3–21(c)(1)(i). Accordingly, the furnishing of such information would not constitute the rendering of ''investment advice'' for purposes of section 3(21)(A)(ii) of ERISA.

(3) *Asset Allocation Models*. Information and materials (e.g., pie charts, graphs, or case studies) that provide a participant or beneficiary with models, available to all plan participants and beneficiaries, of asset allocation portfolios of hypothetical individuals with different time horizons and risk profiles, where: (i) Such models are based on generally accepted investments theories that take into account the historic returns of different asset classes (e.g., equities, bonds, or cash) over define periods of time; (ii) all material facts and assumptions on which such models are based (e.g., retirement ages, life expectancies, income levels, financial resources, replacement income ratios, inflation rates, and rates of return) accompany the models; (iii) to the extent that an asset allocation model identifies any specific investment alternative available under the plan, the model is accompanied by a statement indicating that other investment alternatives having similar risk and return characteristics may be available under the plan and identifying where information on those investment alternatives may be obtained; and (iv) the asset allocation models are accompanied by a statement indicating that, in applying particular asset allocation models to their individual situations, participants or beneficiaries should consider their other assets, income, and investments (e.g., equity in a home, IRA investments, savings accounts, and interests in other qualified and non-qualified plans) in addition to their interests in the plan.

Because the information and materials described above would enable a participant or beneficiary to assess the relevance of an asset allocation model to his or her individual situation, the furnishing of such information would not constitute a ''recommendation'' within the meaning of 29 CFR 2510.3–21(c)(1)(i) and, accordingly, would not constitute ''investment advice'' for purposes of section 3(21)(A)(ii) of ERISA. This result would not, in the view of the Department, be affected by the fact that a plan offers only one investment alternative in a particular asset class identified in an asset allocation model.

(4) *Interactive Investment Materials*. Questionnaires, worksheets, software, and similar materials which provide a participant or beneficiary the means to estimate future retirement income needs and assess the impact of different asset allocations on retirement income, where: (i) Such materials are based on generally accepted investment theories that take into account the historic returns of different asset classes (e.g., equities, bonds, or cash) over defined periods of time; (ii) there is an objective correlation between the asset allocations generated by the materials and the information and data supplied by the participant or beneficiary; (iii) all material facts and assumptions (e.g., retirement ages, life expectancies, income levels, financial resources, replacement income ratios, inflation rates, and rates of return) which may affect a participant's or beneficiary's assessment of the different asset allocations accompany the materials or are specified by the participant or beneficiary; (iv) to the extent that an asset allocation generated by the materials identifies any specific investment alternative available under the plan, the asset allocation is accompanied by a statement indicating that other investment alternatives having similar risk and return characteristics may be available under the plan and identifying where information on those investment alternatives may be obtained; and (v) the materials either take into account or are accompanied by a statement indicating that, in applying particular asset allocations to their individual situations, participants or beneficiaries should consider their other assets, income, and investments (e.g., equity in a home, IRA investments, savings accounts, and interests in other qualified and non-qualified plans) in addition to their interests in the plan.

The information provided through the use of the above-described materials enables participants and beneficiaries independently to design and assess multiple asset allocation models, but otherwise these materials do not differ from asset allocation models based on hypothetical assumptions. Such information would not constitute a ''recommendation'' within the meaning of 29 CFR 2510.3–21(c)(1)(i) and , accordingly, would not constitute ''investment advice'' for purposes of section 3(21)(A)(ii) of ERISA.

The Department notes that the information and materials described in subparagraphs (1)–(4) above merely represent examples of the type of information and materials which may be furnished to participants and beneficiaries without such information and materials constituting ''investment advice.'' In this regard, the Department recognizes that there may be many other examples of information, materials, and educational services which, if furnished to participants and beneficiaries, would not constitute ''investment advice.'' Accordingly, no inferences should be drawn from subparagraphs (1)–(4), above, with respect to whether the furnishing of any information, materials or educational services not described therein may constitute ''investment advice.'' Determinations as to whether the provision of any information, materials or educational services not described herein constitutes the rendering of ''investment advice'' must be made by reference to the criteria set forth in 29 CFR 2510. 3–21(c)(1).

(e) *Selection and Monitoring of Educators and Advisors.* As with any designation of a service provider to a plan, the designation of a person(s) to provide investment educational services or investment advice to plan participants and beneficiaries is an exercise of discretionary authority or control with respect to management of the plan; therefore, persons making the designation must act prudently and solely in the interest of the plan participants and beneficiaries, both in making the designation(s) and in continuing such designation(s). See ERISA sections 3(21)(A)(i) and 404(a), 29 U.S.C. 1002 (21)(A)(i) and 1104(a). In addition, the designation of an investment advisor to serve as a fiduciary may give rise to co-fiduciary liability if the person making and continuing such designation in doing so fails to act prudently and solely in the interest of plan participants and beneficiaries; or knowingly participates in, conceals or fails to make reasonable efforts to correct a known breach by the investment advisor. See ERISA section 405(a), 29 U.S.C. 1105(a). The Department notes, however, that, in the context of an ERISA section 404(c) plan, neither the designation of a person to provide education nor the designation of a fiduciary to provide investment advice to participants and beneficiaries would, in itself, give rise to fiduciary liability for loss, or with respect to any breach of part 4 of title I of ERISA, that is the direct and necessary result of a participant's or beneficiary's exercise of independent control. 29 CFR 2550.404c–1(d). The Department also notes that a plan sponsor or fiduciary would have no fiduciary responsibility or liability with respect to the actions of a third party selected by a participant or beneficiary to provide education or investment advice where the plan sponsor or fiduciary neither selects nor endorses the educator or advisor, nor otherwise makes arrangements with the educator or advisor to provide such services.

[61 FR 29588, June 11, 1996]

§ 2509.99–1 Interpretive Bulletin Relating to Payroll Deduction IRAs.

(a) *Scope.* This interpretive bulletin sets forth the Department of Labor's (the Department's) interpretation of section 3(2)(A) of the Employee Retirement Income Security Act of 1974, as amended, (ERISA) and 29 CFR 2510.3–2(d), as applied to payroll deduction programs established by employers[1] for the purpose of enabling employees to make voluntary contributions to individual retirement accounts or individual retirement annuities (IRAs) described in section 408(a) or (b) or section 408A of the Internal Revenue Code (the Code).

(b) *General.* It has been the Department's long-held view that an employer who simply provides employees with the opportunity for making contributions to an IRA through payroll deductions does not thereby establish a ''pension plan'' within the meaning of section 3 (2) (A) of ERISA. In this regard, 29 CFR 2510.3–2 (d) sets forth a safe harbor under which IRAs will not be considered to be pension plans when the conditions of the regulation are satisfied. Thus, an employer may, with few constraints, provide to its employees an opportunity for saving for retirement, under terms and conditions similar to those of certain other optional payroll deduction programs, such as for automatic savings deposits or purchases of United States savings bonds, without thereby creating a pension plan under Title I of ERISA. The guidance provided herein is intended to clarify the application of the IRA safe harbor set forth at 29 CFR 2510.3–2 (d) and, thereby, facilitate the establishment of payroll deduction IRAs.

(c) *Employee communications.* (1) It is the Department's view that, so long as an employer maintains neutrality with respect to an IRA sponsor in its communications with

[1] The views expressed in this Interpretive Bulletin with respect to payroll deduction programs of employers are also generally applicable to dues checkoff programs of employee organizations.

its employees, the employer will not be considered to ''endorse'' an IRA payroll deduction program for purposes of 29 CFR 2510.3–2(d).[2] An employer may encourage its employees to save for retirement by providing general information on the IRA payroll deduction program and other educational materials that explain the advisability of retirement savings, including the advantages of contributing to an IRA, without thereby converting the program under which the employees' wages are withheld for contribution into the IRAs into an ERISA covered plan. However, the employer must make clear that its involvement in the program is limited to collecting the deducted amounts and remitting them promptly to the IRA sponsor and that it does not provide any additional benefit or promise any particular investment return on the employee's savings.

(2) The employer may also do the following without converting a payroll deduction IRA program into an ERISA plan: An employer may answer employees' specific inquiries about the mechanics of the IRA payroll deduction program and may refer other inquiries to the appropriate IRA sponsor. An employer may provide to employees informational materials written by the IRA sponsor describing the sponsor's IRA programs or addressing topics of general interest regarding investments and retirement savings, provided that the material does not itself suggest that the employer is other than neutral with respect to the IRA sponsor and its products; the employer may request that the IRA sponsor prepare such informational materials and it may review such materials for appropriateness and completeness. The fact that the employer's name or logo is displayed in the informational materials in connection with describing the payroll deduction program would not in and of itself, in the Department's view, suggest that the employer has ''endorsed'' the IRA sponsor or its products, provided that the specific context and surrounding facts and circumstances make clear to the employees that the employer's involvement is limited to facilitating employee contributions through payroll deductions.[3]

(d) *Employer Limitations on the number of IRA sponsors offered under the program.* The Department recognizes that the cost of permitting employees to make IRA contributions through payroll deductions may be significantly affected by the number of IRA sponsors to which the employer must remit contributions. It is the view of the Department that an employer may limit the number of IRA sponsors to which employees may make payroll deduction contributions without exceeding the limitations of 29 CFR 2510.3–2(d), provided that any limitations on, or costs or assessments associated with an employee's ability to transfer or roll over IRA contributions to another IRA sponsor is fully disclosed in advance of the employee's decision to participate in the program. The employer may select one IRA sponsor as the designated recipient for payroll deduction contributions, or it may establish criteria by which to select IRA sponsors, e.g., standards relating to the sponsor's provision of investment education, forms, availability to answer employees' questions, etc., and may periodically review its selectees to determine whether to continue to designate them. However, an employer may be considered to be involved in the program beyond the limitations set forth in 29 CFR 2510.3–2(d) if the

[2] The Department has specifically stated, in its Advisory Opinions, that an employer may demonstrate its neutrality with respect to an IRA sponsor in a variety of ways, including (but not limited to) by ensuring that any materials distributed to employees in connection with an IRA payroll deduction program clearly and prominently state, in language reasonably calculated to be understood by the average employee, that the IRA payroll deduction program is completely voluntary; that the employer does not endorse or recommend either the sponsor or the funding media; that other IRA funding media are available to employees outside the payroll deduction program; that an IRA may not be appropriate for all individuals; and that the tax consequences of contributing to an IRA through the payroll deduction program are generally the same as the consequences of contributing to an IRA outside the program. The employer would not be considered neutral, in the Department's view, to the extent that the materials distributed to employees identified the funding medium as having as one of its purposes investing in securities of the employer or its affiliates or the funding medium in fact has any significant investments in such securities. If the IRA program were a result of an agreement between the employer and an employee organization, the Department would view informational materials that identified the funding medium as having as one of its purposes investing in an investment vehicle that is designed to benefit an employee organization by providing more jobs for its members, loans to its members, or similar direct benefits (or the funding medium's actual investments in any such investment vehicles) as indicating the employee organization's involvement in the program in excess of the limitations of 29 CFR 2510.3–2 (d).

[3] For example, if the employer whose logo appeared on the promotional materials provided a statement along the lines of in the first sentence of footnote 5, the employer would not be considered to have endorsed the IRA product.

employer negotiates with an IRA sponsor and thereby obtains special terms and conditions for its employees that are not generally available to similar purchasers of the IRA. The employer's involvement in the IRA program would also be in excess of the limitations of the regulation if the employer exercises any influence over the investments made or permitted by the IRA sponsor.

(e) *Administrative fees.* The employer may pay any fee the IRA sponsor imposes on employers for services the sponsor provides in connection with the establishment and maintenance of the payroll deduction process itself, without exceeding the limitations of 29 CFR 2510.3–2(d). Further, the employer may assume the internal costs (such as for overhead, bookkeeping, etc) of implementing and maintaining the payroll deduction program without reimbursement from either employees or the IRA sponsor without exceeding the limits of the regulation. However, if an employer pays, in connection with operating an IRA payroll deduction program, any administrative, investment management, or other fee that the IRA sponsor would require employees to pay for establishing or maintaining the IRA, the employer would, in the view of the Department, fall outside the safe harbor and, as a result, may be considered to have established a ''pension plan'' for its employees.

(f) *Reasonable Compensation for Services.* 29 CFR 2510.3–2(d) provides that an employer may not receive any consideration in connection with operating an IRA payroll deduction program, but may be paid ''reasonable compensation for services actually rendered in connection with payroll deductions or dues checkoffs.'' Employers have asked whether ''reasonable compensation'' under section 2510.3–2(d) includes payments from an IRA sponsor to an employer for the employer's cost of operating the IRA payroll deduction program. It is the Department's view that the IRA sponsor may make such payments, to the extent that they constitute compensation for the actual costs of the program to the employer. However, ''reasonable compensation'' does not include any profit to the employer. *See* 29 CFR 2510.3–1(j), relating to group or group-type insurance programs. For example, if an IRA sponsor offers to pay an employer an amount equal to a percentage of the assets contributed by employees to IRAs through payroll deduction, such an arrangement might exceed ''reasonable compensation'' for the services actually rendered by the employer in connection with the IRA payroll deduction program. An employer will also be considered to have received consideration that is not ''reasonable compensation'' if the IRA sponsor agrees to make or to permit particular investments of IRA contributions in consideration for the employer's agreement to make a payroll deduction program available to its employees, or if the IRA sponsor agrees to extend credit to or for the benefit of the employer in return for the employer's making payroll deduction available to the employees.

(g) *Additional rules when employer is IRA sponsor or affiliate of IRA sponsor.* Under certain circumstances, an employer that offers IRAs in the normal course of its business to the general public or that is an affiliate[4] of an IRA sponsor may provide its employees with the opportunity to make contributions to IRAs sponsored by the employer or the affiliate through a payroll deduction program, without exceeding the limitations of § 2510.3–2(d). If the IRA products offered to the employees for investment of the payroll deduction contributions are identical to IRA products the sponsor offers the general public in the ordinary course of its business, and any management fees, sales commissions, and the like charged by the IRA sponsor to employees participating in the payroll deduction program are the same as those charged by the sponsor to employees of non-affiliated employers that establish an IRA payroll deduction program, the Department has generally taken the position that this alone will not cause the employer to be sufficiently involved in the IRA program as an employer or to have received consideration of the type

[4] For purposes of this interpretive bulletin, the definition of ''affiliate'' in ERISA section 407(d)(7) applies.

[5] While the funding medium offered by an employer that is an IRA sponsor or an affiliate of an IRA sponsor might be considered an employer security when offered to its own employees, the fact that informational materials provided to employees identify the funding medium as having as one of its purposes investing in securities of the employer would not, in the Department's view, involve the employer beyond the limits of 29 CFR 2510.3–2(d). Neither would the fact that the funding medium may actually be so invested. However, the Department would consider that an employer may have exceeded the limitation of 2510.3–2(d) if the informational materials the employer provides to employees suggest that the employer, in providing the IRA payroll deduction program for purposes of investing in employer securities, is acting as an employer in relation to persons who participate in the program, rather than as an IRA sponsor acting in the course of its ordinary business of making IRA products available to the public.

[6] However, if an employer that is an IRA sponsor waives enrollment and management fees for its employees' IRAs, and it normally charges those fees to members of the public who purchase IRAs, the employer would be considered to be so involved in the program as to be outside the safe harbor of the regulation.

prohibited under § 2510.2(d)(iv) to warrant the program being considered outside the safe harbor of the regulation.[5] Under such circumstances, the employer, in offering payroll deduction contribution opportunities to its employees, would appear to be acting generally as an IRA sponsor, rather than as the employer of the individuals who make the contributions.[6]

[64 FR 33001, June 18, 1999]

SUBCHAPTER B—DEFINITIONS AND COVERAGE UNDER THE EMPLOYEE RETIREMENT INCOME SECURITY ACT OF 1974

PART 2510—DEFINITIONS OF TERMS USED IN SUBCHAPTERS C, D, E, F, AND G OF THIS CHAPTER

Sec.
2510.3–1 Employee welfare benefit plan.
2510.3–2 Employee pension benefit plan.
2510.3–3 Employee benefit plan.
2510.3–16 Definition of ''plan administrator.''
2510.3–21 Definition of ''Fiduciary''.
2510.3–37 Multiemployer plan.
2510.3–38 Filing requirements for State registered investment advisers to be investment managers.
2510.3–40 Plans Established or Maintained Under or Pursuant to Collective Bargaining Agreements Under Section 3(40)(A) of ERISA.
2510.3–101 Definition of ''plan assets''—plan investments.
2510.3–102 Definition of ''plan assets''—participant contributions.

AUTHORITY: 29 U.S.C. 1002(2), 1002(16), 1002(21),1002(37), 1002(38), 1002(40), 1031, and 1135; Secretary of Labor's Order 1–2003, 68 FR 5374; Sec. 2510.3–101 also issued under sec. 102 of Reorganization Plan No. 4 of 1978, 43 FR 47713, 3 CFR, 1978 Comp., p. 332 and E.O. 12108, 44 FR 1065, 3 CFR, 1978 Comp., p. 275, and 29 U.S.C. 1135 note. Sec. 2510.3–102 also issued under sec. 102 of Reorganization Plan No. 4 of 1978, 43 FR 47713, 3 CFR, 1978 Comp., p. 332 and E.O. 12108, 44 FR 1065, 3 CFR, 1978 Comp., p. 275. Sec. 2510.3–38 is also issued under sec. 1, Pub. L. 105–72, 111 Stat. 1457.

§ 2510.3–1 Employee welfare benefit plan.

(a) *General.* (1) The purpose of this section is to clarify the definition of the terms ''employee welfare benefit plan'' and ''welfare plan'' for purposes of title I of the Act and this chapter by identifying certain practices which do not constitute employee welfare benefit plans for those purposes. In addition, the practices listed in this section do not constitute employee pension benefit plans within the meaning of section 3(2) of the Act, and, therefore, do not constitute employee benefit plans within the meaning of section 3(3). Since under section 4(a) of the Act, only employee benefit plans within the meaning of section 3(3) are subject to title I of the Act, the practices listed in this section are not subject to title I.

(2) The terms ''employee welfare benefit plan'' and ''welfare plan'' are defined in section 3(1) of the Act to include plans providing ''(i) medical, surgical, or hospital care or benefits, or benefits in the event of sickness, accident, disability, death or unemployment, or vacation benefits, apprenticeship or other training programs, or day care centers, scholarship funds, or prepaid legal services, or (ii) any benefit described in section 302(c) of the Labor Management Relations Act, 1947 (other than pensions on retirement or death, and insurance to provide such pensions).'' Under this definition, only plans which provide benefits described in section 3(1)(A) of the Act or in section 302(c) of the Labor-Management Relations Act, 1947 (hereinafter ''the LMRA'') (other than pensions on retirement or death) constitute welfare plans. For example, a system of payroll deductions by an employer for deposit in savings accounts owned by its employees is not an employee welfare benefit plan within the meaning of section 3(1) of the Act because it does not provide benefits described in section 3(1)(A) of the Act or section 302(c) of the LMRA. (In addition, if each employee has the right to withdraw the balance in his or her account at any time, such a payroll savings plan does not meet the requirements for a pension plan set forth in section 3(2) of the Act and, therefore, is not an employee benefit plan within the meaning of section 3(3) of the Act).

(3) Section 302(c) of the LMRA lists exceptions to the restrictions contained in subsections (a) and (b) of that section on payments and loans made by an employer to individuals and groups representing employees of the employer. Of these exceptions, only those contained in paragraphs (5), (6), (7) and (8) describe benefits provided through employee benefit plans. Moreover, only paragraph (6) describes benefits not described in section 3(1)(A) of the Act. The benefits described in section

302(c)(6) of the LMRA but not in section 3(1)(A) of the Act are ''* * * holiday, severance or similar benefits''. Thus, the effect of section 3(1)(B) of the Act is to include within the definition of ''welfare plan'' those plans which provide holiday and severance benefits, and benefits which are similar (for example, benefits which are in substance severance benefits, although not so characterized).

(4) Some of the practices listed in this section as excluded from the definition of ''welfare plan'' or mentioned as examples of general categories of excluded practices are inserted in response to questions received by the Department of Labor and, in the Department's judgment, do not represent borderline cases under the definition in section 3(1) of the Act. Therefore, this section should not be read as implicitly indicating the Department's views on the possible scope of section 3(1).

(b) *Payroll practices.* For purposes of title I of the Act and this chapter, the terms ''employee welfare benefit plan'' and ''welfare plan'' shall not include—

(1) Payment by an employer of compensation on account of work performed by an employee, including compensation at a rate in excess of the normal rate of compensation on account of performance of duties under other than ordinary circumstances, such as—

(i) Overtime pay,

(ii) Shift premiums,

(iii) Holiday premiums,

(iv) Weekend premiums;

(2) Payment of an employee's normal compensation, out of the employer's general assets, on account of periods of time during which the employee is physically or mentally unable to perform his or her duties, or is otherwise absent for medical reasons (such as pregnancy, a physical examination or psychiatric treatment); and

(3) Payment of compensation, out of the employer's general assets, on account of periods of time during which the employee, although physically and mentally able to perform his or her duties and not absent for medical reasons (such as pregnancy, a physical examination or psychiatric treatment) performs no duties; for example—

(i) Payment of compensation while an employee is on vacation or absent on a holiday, including payment of premiums to induce employees to take vacations at a time favorable to the employer for business reasons,

(ii) Payment of compensation to an employee who is absent while on active military duty,

(iii) Payment of compensation while an employee is absent for the purpose of serving as a juror or testifying in official proceedings,

(iv) Payment of compensation on account of periods of time during which an employee performs little or no productive work while engaged in training (whether or not subsidized in whole or in part by Federal, State or local government funds), and

(v) Payment of compensation to an employee who is relieved of duties while on sabbatical leave or while pursuing further education.

(c) *On-premises facilities.* For purposes of title I of the Act and this chapter, the terms ''employee welfare benefit plan'' and ''welfare plan'' shall not include—

(1) The maintenance on the premises of an employer or of an employee organization of recreation, dining or other facilities (other than day care centers) for use by employees or members; and

(2) The maintenance on the premises of an employer of facilities for the treatment of minor injuries or illness or rendering first aid in case of accidents occurring during working hours.

(d) *Holiday gifts.* For purposes of title I of the Act and this chapter the terms ''employee welfare benefit plan'' and ''welfare plan'' shall not include the distribution of gifts such as turkeys or hams by an employer to employees at Christmas and other holiday seasons.

(e) *Sales to employees.* For purposes of title I of the Act and this chapter, the terms ''employee welfare benefit plan'' and ''welfare plan'' shall not include the sale by an employer to employees of an employer, whether or not at prevailing market prices, of articles or commodities of the kind which the employer offers for sale in the regular course of business.

(f) *Hiring halls.* For purposes of title I of the Act and this chapter, the terms ''employee welfare benefit plan'' and ''welfare plan'' shall not include the

maintenance by one or more employers, employee organizations, or both, of a hiring hall facility.

(g) *Remembrance funds.* For purposes of title I of the Act and this chapter, the terms ''employee welfare benefit plan'' and ''welfare plan'' shall not include a program under which contributions are made to provide remembrances such as flowers, an obituary notice in a newspaper or a small gift on occasions such as the sickness, hospitalization, death or termination of employment of employees, or members of an employee organization, or members of their families.

(h) *Strike funds.* For purposes of title I of the Act and this chapter, the terms ''employee welfare benefit plan'' and ''welfare plan'' shall not include a fund maintained by an employee organization to provide payments to its members during strikes and for related purposes.

(i) *Industry advancement programs.* For purposes of title I of the Act and this chapter, the terms ''employee welfare benefit plan'' and ''welfare plan'' shall not include a program maintained by an employer or group or association of employers, which has no employee participants and does not provide benefits to employees or their dependents, regardless of whether the program serves as a conduit through which funds or other assets are channelled to employee benefit plans covered under title I of the Act.

(j) *Certain group or group-type insurance programs.* For purposes of title I of the Act and this chapter, the terms ''employee welfare benefit plan'' and ''welfare plan'' shall not include a group or group-type insurance program offered by an insurer to employees or members of an employee organization, under which

(1) No contributions are made by an employer or employee organization;

(2) Participation the program is completely voluntary for employees or members;

(3) The sole functions of the employer or employee organization with respect to the program are, without endorsing the program, to permit the insurer to publicize the program to employees or members, to collect premiums through payroll deductions or dues checkoffs and to remit them to the insurer; and

(4) The employer or employee organization receives no consideration in the form of cash or otherwise in connection with the program, other than reasonable compensation, excluding any profit, for administrative services actually rendered in connection with payroll deductions or dues checkoffs.

(k) *Unfunded scholarship programs.* For purposes of title I of the Act and this chapter, the terms ''employe welfare benefit plan'' and ''welfare plan'' shall not include a scholarship program, including a tuition and education expense refund program, under which payments are made solely from the general assets of an employer or employee organization.

[40 FR 34530, Aug. 15, 1975]

§ 2510.3–2 Employee pension benefit plan.

(a) *General.* This section clarifies the limits of the defined terms ''employee pension benefit plan'' and ''pension plan'' for purposes of title I of the Act and this chapter by identifying certain specific plans, funds and programs which do not constitute employee pension benefit plans for those purposes. To the extent that these plans, funds and programs constitute employee welfare benefit plans within the meaning of section 3(1) of the Act and § 2510.3–1 of this part, they will be covered under title I; however, they will not be subject to parts 2 and 3 of title I of the Act.

(b) *Severance pay plans.* (1) For purposes of title I of the Act and this chapter, an arrangement shall not be deemed to constitute an employee pension benefit plan or pension plan solely by reason of the payment of severance benefits on account of the termination of an employee's service, provided that:

(i) Such payments are not contingent, directly or indirectly, upon the employee's retiring;

(ii) The total amount of such payments does not exceed the equivalent of twice the employee's annual compensation during the year immediately preceding the termination of his service; and

(iii) All such payments to any employee are completed,

(A) In the case of an employee whose service is terminated in connection with a limited program of terminations, within the later of 24 months after the termination of the employee's service, or 24 months after the employee reaches normal retirement age; and

(B) In the case of all other employees, within 24 months after the termination of the employee's service.

(2) For purposes of this paragraph (b),

(i) ''Annual compensation'' means the total of all compensation, including wages, salary, and any other benefit of monetary value, whether paid in the form of cash or otherwise, which was paid as consideration for the employee's service during the year, or which would have been so paid at the employee's usual rate of compensation if the employee had worked a full year.

(ii) ''Limited program of terminations'' means a program of terminations:

(A) Which, when begun, was scheduled to be completed upon a date certain or upon the occurrence of one or more specified events;

(B) Under which the number, percentage or class or classes of employees whose services are to be terminated is specified in advance; and

(C) Which is described in a written document which is available to the Secretary upon request, and which contains information sufficient to demonstrate that the conditions set forth in paragraphs (b)(2)(ii)(A) and (B) of this section have been met.

(c) *Bonus program.* For purposes of title I of the Act and this chapter, the terms ''employee pension benefit plan'' and ''pension plan'' shall not include payments made by an employer to some or all of its employees as bonuses for work performed, unless such payments are systematically deferred to the termination of covered employment or beyond, or so as to provide retirement income to employees.

(d) *Individual Retirement Accounts.* (1) For purposes of title I of the Act and this chapter, the terms ''employee pension benefit plan'' and ''pension plan'' shall not include an individual retirement account described in section 408(a) of the Code, an individual retirement annuity described in section 408(b) of the Internal Revenue Code of 1954 (hereinafter ''the Code'') and an individual retirement bond described in section 409 of the Code, provided that—

(i) No contributions are made by the employer or employee association;

(ii) Participation is completely voluntary for employees or members;

(iii) The sole involvement of the employer or employee organization is without endorsement to permit the sponsor to publicize the program to employees or members, to collect contributions through payroll deductions or dues checkoffs and to remit them to the sponsor; and

(iv) The employer or employee organization receives no consideration in the form of cash or otherwise, other than reasonable compensation for services actually rendered in connection with payroll deductions or dues checkoffs.

(e) *Gratuitous payments to pre-Act retirees.* For purposes of title I of the Act and this chapter the terms ''employee pension benefit plan'' and ''pension plan'' shall not include voluntary, gratuitous payments by an employer to former employees who separated from the service of the employer if:

(1) Payments are made out of the general assets of the employer,

(2) Former employees separated from the service of the employer prior to September 2, 1974,

(3) Payments made to such employees commenced prior to September 2, 1974, and

(4) Each former employee receiving such payments is notified annually that the payments are gratuitous and do not constitute a pension plan.

(f) *Tax sheltered annuities.* For the purpose of title I of the Act and this chapter, a program for the purchase of an annuity contract or the establishment of a custodial account described in section 403(b) of the Internal Revenue Code of 1954 (the Code), pursuant to salary reduction agreements or agreements to forego an increase in salary, which meets the requirements of 26 CFR 1.403(b)–1(b)(3) shall not be ''established or maintained by an employer'' as that phrase is used in the definition of the terms ''employee pension benefit plan'' and ''pension plan'' if

(1) Participation is completely voluntary for employees;

(2) All rights under the annuity contract or custodial account are enforceable solely by the employee, by a beneficiary of such employee, or by any authorized representative of such employee or beneficiary;

(3) The sole involvement of the employer, other than pursuant to paragraph (f)(2) of this section, is limited to any of the following:

(i) Permitting annuity contractors (which term shall include any agent or broker who offers annuity contracts or who makes available custodial accounts within the meaning of section 403(b)(7) of the Code) to publicize their products to employees,

(ii) Requesting information concerning proposed funding media, products or annuity contractors;

(iii) Summarizing or otherwise compiling the information provided with respect to the proposed funding media or products which are made available, or the annuity contractors whose services are provided, in order to facilitate review and analysis by the employees;

(iv) Collecting annuity or custodial account considerations as required by salary reduction agreements or by agreements to forego salary increases, remitting such considerations to annuity contractors and maintaining records of such considerations;

(v) Holding in the employer's name one or more group annuity contracts covering its employees;

(vi) Before February 7, 1978, to have limited the funding media or products available to employees, or the annuity contractors who could approach employees, to those which, in the judgment of the employer, afforded employees appropriate investment opportunities; or

(vii) After February 6, 1978, limiting the funding media or products available to employees, or the annuity contractors who may approach employees, to a number and selection which is designed to afford employees a reasonable choice in light of all relevant circumstances. Relevant circumstances may include, but would not necessarily be limited to, the following types of factors:

(A) The number of employees affected,

(B) The number of contractors who have indicated interest in approaching employees,

(C) The variety of available products,

(D) The terms of the available arrangements,

(E) The administrative burdens and costs to the employer, and

(F) The possible interference with employee performance resulting from direct solicitation by contractors; and

(4) The employer receives no direct or indirect consideration or compensation in cash or otherwise other than reasonable compensation to cover expenses properly and actually incurred by such employer in the performance of the employer's duties pursuant to the salary reduction agreements or agreements to forego salary increases described in this paragraph (f) of this section.

(g) *Supplemental payment plans*—(1) *General rule.* Generally, an arrangement by which a payment is made by an employer to supplement retirement income is a pension plan. Supplemental payments made on or after September 26, 1980, shall be treated as being made under a welfare plan rather than a pension plan for purposes of title I of the Act if all of the following conditions are met:

(i) Payment is made for the purpose of supplementing the pension benefits of a participant or his or her beneficiary out of:

(A) The general assets of the employer, or

(B) A separate trust fund established and maintained solely for that purpose.

(ii) The amount payable under the supplemental payment plan to a participant or his or her beneficiary with respect to a month does not exceed the payee's supplemental payment factor (''SPF,'' as defined in paragraph (g)(3)(i) of this section) for that month, provided however that unpaid monthly amounts may be cumulated and paid in subsequent months to the participant or his or her beneficiary.

(iii) The payment is not made before the last day of the month with respect to which it is computed.

(2) *Safe harbor for arrangements concerning pre-1977 retirees.* (i) Notwithstanding paragraph (g)(1) of this section, effective January 1, 1975 an arrangement by which a payment is made by an employer to supplement the retirement income of a former employee who separated from the service of the employer prior to January 1, 1977 shall be deemed not to have been made under an employee benefit plan if all of the following conditions are met:

(A) The employer is not obligated to make the payment or similar payments for more than twelve months at a time.

(B) The payment is made out of the general assets of the employer.

(C) The former employee is notified in writing at least once each year in which a payment is made that the payments are not part of an employee benefit plan subject to the protections of the Act.

(D) The former employee is notified in writing at least once each year in which a payment is made of the extent of the employer's obligation, if any, to continue the payments.

(ii) A person who receives a payment on account of his or her relationship to a former employee who retired prior to January 1, 1977 is considered to be a former employee for purposes of this paragraph (g)(2).

(3) *Definitions and special rules.* For purposes of this paragraph (g)—

(i) The term ''supplemental payment factor'' (SPF) is, for any particular month, the product of:

(A) The individual's pension benefit amount (as defined in paragraph (g)(3)(ii) of this section), and

(B) The cost of living increase (as defined in paragraph (g)(3)(v) of this section) for that month.

(ii)(A) The term ''pension benefit amount'' (PBA) means, with regard to a retiree, the amount of pension benefits payable, in the form of the annuity chosen by the retiree, for the first full month that he or she is in pay status under a pension plan (as defined in paragraph (g)(3)(iii) of this section) sponsored by his or her employer or under a multiemployer plan in which his or her employer participates. If the retiree has received a lump-sum distribution from the plan, the PBA for the retiree shall be determined as follows:

(*1*) If the plan provides an annuity option at the time of the distribution, the PBA shall be computed as if the distribution had been applied on that date to the purchase from the plan of a level straight annuity for the life of the participant if the participant was unmarried at the time of the distribution or a joint and survivor annuity if the participant was married at the time of distribution.

(*2*) If the plan does not provide an annuity option at the time of the distribution, the PBA shall be computed as if the distribution had been applied on that date to the purchase from an insurance company qualified to do business in a State of a commercially available level straight annuity for the life of the participant if the participant was then single, or a joint and survivor annuity if the participant was then married, based upon the assumption that the participant and beneficiary are standard mortality risks.

(B) If the retiree has received from the plan a series of distributions which do not constitute a lump-sum distribution or an annuity, the PBA for the retiree shall be determined with respect to each distribution according to paragraph (g)(3)(ii)(A) of this section, or in accordance with a reasonably equivalent method.

(C) The term PBA, with regard to the beneficiary of a plan participant, means:

(*1*) The amount of pension benefits, payable in the form of a survivor annuity to the beneficiary, for the first full month that he or she begins to receive the survivor annuity, reduced by:

(*2*) Any increases which have been incorporated as part of the survivor annuity under the plan since the participant entered pay status or, if the participant died before the commencement of pension benefits, since the participant's date of death.

(D) Where a plan participant has commenced to receive his or her pension benefits in the form of a straight-life annuity, or another form of an annuity that does not continue after the participant's death in the form of a survivor annuity, no beneficiary of the participant will have a PBA.

(iii) The term ''pension plan'' means, for purposes of this paragraph (g), a pension plan as defined in section 3(2) of the Act, but not including a plan described in section 4(b), 201(2), or 301(a)(3) of the Act. The term also does not include an arrangement meeting all the conditions of paragraph (g)(1) or (g)(2) of this section or of an arrangement described in § 2510.3–2(e). In the case of a controlled group of corporations within the meaning of section 407(d)(5) of the Act, all pension plans sponsored by members of the group shall be considered to be one pension plan.

(iv) The term ''employer'' means, for purposes of paragraph (g) of this section, the former employer making the supplemental payment. In the case of a contolled group of corporations within the meaning of section 407(d)(7) of the Act, all members of the controlled group shall be considered to be one employer for purposes of this paragraph (g).

(v) The term ''cost of living increase'' (CLI) means, as to any month, a percentage equal to the following fraction:

$$\frac{a-b}{b}$$

where a= the CPIU for the month for which a payment is being computed, and b= the CPIU for the first full month the retiree was in pay status. Where the CLI is calculated for the beneficiary of a plan participant, ''b'' continues to be equal to the CPIU for the first full month the retiree was in pay status. If, however, the participant dies before the commencement of pension benefits, ''b'' is equal to the CPIU for the first full month the survivor is in pay status.

(vi) The term ''CPIU'' means the U.S. City Average All Items Consumer Price Index for all Urban Consumers, published by the U.S. Department of Labor, Bureau of Labor Statistics. Data concerning the CPIU for a particular period can be obtained from the U.S. Department of Labor, Bureau of Labor Statistics, Division of Consumer Prices and Price Indexes, Washington, DC 20212.

(vii) Where an employer does not pay to a retiree the full amount of the supplemental payments which would be permitted under paragraph (g)(1) of this section, any unpaid amounts may be cumulated and paid in subsequent months to either the retiree or the beneficiary of the retiree. The beneficiary need not be the recipient of a survivor annuity in order to be paid these cumulated supplemental payments.

(5) *Examples*. The following examples illustrate how this paragraph (g) works. As referred to in these examples, the CPIU's for July through November of 1980 are as follows:

July 1980: 247.8
August 1980: 249.4
September 1980: 251.7
October 1980: 253.9
November 1980: 256.2

Example (1)(a). E is an employer. R received monthly benefits of $600 under a straight-life annuity under E's defined benefit pension plan after R retired from E and entered pay status on July 1, 1980. The amount that E may pay to R as supplemental payments under a welfare rather than pension plan with respect to the months of July through September of 1980 is computed as follows:

SPF for July 1980:

$$SPF = \frac{a-b}{b} \times PBA = \frac{247.8-247.8}{247.8} \times \$600 = \$0.00$$

SPF for August 1980:

$$SPF = \frac{249.4-247.8}{247.8} \times \$600 = \$3.87$$

SPF for September 1980:

$$SPF = \frac{251.7-247.8}{247.8} \times \$600 = \$9.44$$

$$Total = \$0.00 + 3.87 + 9.44 = \$13.31$$

No supplemental payment may be made to R as a welfare plan payment with respect to July 1980, the month of retirement. The $3.87 that may be paid with respect to August 1980 may be paid at any time after August 31,

1980. The $9.44 that may be paid with respect to September 1980 may be paid at any time after September 30, 1980.

Example (1)(b). S is the beneficiary of R. Because R received pension benefits under a straight-life annuity, S will receive no survivor annuity from E after R's death. S thus will have no PBA after R's death and will not be eligible to receive any supplemental payments from E based on S's PBA. To the extent, however, that R did not receive supplemental payments from E to the maximum limit allowable under paragraph (g)(1), any amounts not paid to R may be cumulated and paid to S after R's death.

Example (2)(a). E is an employer. Q received monthly benefits of $500 in the form of a joint and survivor annuity under E's defined benefit pension plan since retirement from E on July 1, 1980. The amount that E may pay to Q as welfare rather than pension plan payments with respect to the months of July through September of 1980 is computed as follows:

SPF for July 1980:

$$\text{SPF} = \frac{247.8 - 247.8}{247.8} \times \$500 = \$0.00$$

SPF for August 1980:

$$\text{SPF} = \frac{249.4 - 247.8}{247.8} \times \$500 = \$3.23$$

SPF for September 1980:

$$\text{SPF} = \frac{251.7 - 247.8}{247.8} \times \$500 = \$7.87$$

$$\text{Total} = \$0.00 + 3.23 + 7.87 = \$11.10$$

No supplemental payment may be made as a welfare plan payment with respect to July 1980, the month of retirement. The $3.23 that may be paid with respect to August 1980 may be paid at any time after August 31, 1980. The $7.87 that may be paid with respect to September 1980 may be paid at any time after September 30, 1980.

Example (2)(b). Q dies on October 15, 1980 without having received any supplemental payments from E. T is the beneficiary of Q. E pays T a survivor's annuity of $300 beginning in November of 1980. The amount payable to T as a survivor annuity under the plan has not been increased since Q began to receive pension benefits. Thus, T's PBA is $300. The amount that E may pay to T as welfare rather than pension plan payments with respect to the months of July through November 1980 is computed as follows:

SPF for July 1980=$0.00
SPF for August 1980=$3.23
SPF for September 1980=$7.87
SPF for October 1980:

$$\text{SPF} = \frac{a - b}{b} \times \text{PBA} = \frac{253.9 - 247.8}{247.8} \times \$500 = \$12.31$$

(Note that T's ''b'' is equal to Q's ''b''.)
SPF for November 1980:

$$\text{SPF} = \frac{256.2 - 247.8}{247.8} \times \$300 = \$10.17$$

Total that may be paid to T

The maximum E may pay T with respect to the months of July through November 1980 as welfare rather than pension plan payments is the sum of those months' SPFs, which is $33.58.

Example (3). Assume the same facts as in Example (1)(a), except that R elected to receive a lump-sum distribution rather than a straight-life annuity. If R is unmarried on July 1, 1980, R's PBA is $600 for the remainder of R's life. If R is married to S on July 1, 1980, the PBAs of R and S are based on the annuity that would have been paid under an election to receive a joint and survivor annuity. See paragraph (g)(3)(ii)(A)(*1*) of this section.

[40 FR 34530, Aug. 15, 1975, as amended at 44 FR 11763, Mar. 2, 1979; 44 FR 23527, Apr. 20, 1979; 47 FR 50240, Nov. 5, 1982; 47 FR 56847, Dec. 21, 1982]

§ 2510.3–3 Employee benefit plan.

(a) *General.* This section clarifies the definition in section 3(3) of the term ''employee benefit plan'' for purposes of title I of the Act and this chapter. It states a general principle which can be applied to a large class of plans to determine whether they constitute employee benefit plans within the meaning of section 3(3) of the Act. Under section 4(a) of the Act, only employee benefit plans within the meaning of section 3(3) are subject to title I.

(b) *Plans without employees.* For purposes of title I of the Act and this chapter, the term ''employee benefit plan'' shall not include any plan, fund or program, other than an apprenticeship or other training program, under which no employees are participants covered under the plan, as defined in paragraph (d) of this section. For example, a so-called ''Keogh'' or ''H.R. 10'' plan under which only partners or only a sole proprietor are participants covered under the plan will not be covered under title I. However, a Keogh plan under which one or more common law employees, in addition to the self-employed individuals, are participants covered under the plan, will be covered under title I. Similarly, partnership buyout agreements described in section 736 of the Internal Revenue Code of 1954 will not be subject to title I.

(c) *Employees.* For purposes of this section:

(1) An individual and his or her spouse shall not be deemed to be employees with respect to a trade or business, whether incorporated or unincorporated, which is wholly owned by the individual or by the individual and his or her spouse, and

(2) A partner in a partnership and his or her spouse shall not be deemed to be employees with respect to the partnership.

(d) *Participant covered under the plan.* (1)(i) An individual becomes a participant covered under an employee welfare benefit plan on the earlier of—

(A) The date designated by the plan as the date on which the individual begins participation in the plan;

(B) The date on which the individual becomes eligible under the plan for a benefit subject only to occurrence of the contingency for which the benefit is provided; or

(C) The date on which the individual makes a contribution to the plan, whether voluntary or mandatory.

(ii) An individual becomes a participant covered under an employee pension plan—

(A) In the case of a plan which provides for employee contributions or defines participation to include employees who have not yet retired, on the earlier of—

(*1*) The date on which the individual makes a contribution, whether voluntary or mandatory, or

(*2*) The date designated by the plan as the date on which the individual has satisfied the plan's age and service requirements for participation, and

(B) In the case of a plan which does not provide for employee contributions and does not define participation to include employees who have not yet retired, the date on which the individual completes the first year of employment which may be taken into account in determining—

(*1*) Whether the individual is entitled to benefits under the plan, or

(*2*) The amount of benefits to which the individual is entitled,

whichever results in earlier participation.

(2)(i) An individual is not a participant covered under an employee welfare plan on the earliest date on which the individual—

(A) Is ineligible to receive any benefit under the plan even if the contingency for which such benefit is provided should occur, and

(B) Is not designated by the plan as a participant.

(ii) An individual is not a participant covered under an employee pension plan or a beneficiary receiving benefits under an employee pension plan if—

(A) The entire benefit rights of the individual—

(*1*) Are fully guaranteed by an insurance company, insurance service or insurance organization licensed to do business in a State, and are legally enforceable by the sole choice of the individual against the insurance company, insurance service or insurance organization; and

(*2*) A contract, policy or certificate describing the benefits to which the individual is entitled under the plan has been issued to the individual; or

(B) The individual has received from the plan a lump-sum distribution or a series of distributions of cash or other property which represents the balance of his or her credit under the plan.

(3)(i) In the case of an employee pension benefit plan, an individual who, under the terms of the plan, has incurred a one-year break in service after having become a participant covered

under the plan, and who has acquired no vested right to a benefit before such break in service is not a participant covered under the plan until the individual has completed a year of service after returning to employment covered by the plan.

(ii) For purposes of paragraph (d)(3)(i) of this section, in the case of an employee pension benefit plan which is subject to section 203 of the Act the term ''year of service'' shall have the same meaning as in section 203(b)(2)(A) of the Act and any regulations issued under the Act and the term ''one-year break in service'' shall have the same meaning as in section 203(b)(3)(A) of the Act and any regulations issued under the Act.

[40 FR 34530, Aug. 15, 1975]

§ 2510.3–16 Definition of "plan administrator."

(a) *In general*. The term ''plan administrator'' or ''administrator'' means the person specifically so designated by the terms of the instrument under which the plan is operated. If an administrator is not so designated, the plan administrator is the plan sponsor, as defined in section 3(16)(B) of ERISA.

(b) In the case of a self-insured group health plan established or maintained by an eligible organization, as defined in § 2590.715–2713A(a) of this chapter, the copy of the self-certification provided by the eligible organization to a third party administrator (including notice of the eligible organization's refusal to administer or fund contraceptive benefits) in accordance with § 2590.715–2713A(b)(1)(ii) of this chapter shall be an instrument under which the plan is operated, shall be treated as a designation of the third party administrator as the plan administrator under section 3(16) of ERISA for any contraceptive services required to be covered under § 2590.715–2713(a)(1)(iv) of this chapter to which the eligible organization objects on religious grounds, and shall supersede any earlier designation. A third party administrator that becomes a plan administrator pursuant to this section shall be responsible for—

(1) The plan's compliance with section 2713 of the Public Health Service Act (42 U.S.C. 300gg–13) (as incorporated into section 715 of ERISA) and § 2590.715–2713 of this chapter with respect to coverage of contraceptive services. To the extent that the plan contracts with different third party administrators for different classifications of benefits (such as prescription drug benefits versus inpatient and outpatient benefits), each third party administrator is responsible for providing contraceptive coverage that complies with section 2713 of the Public Health Service Act (as incorporated into section 715 of ERISA) and § 2590.715–2713 of this chapter with respect to the classification or classifications of benefits subject to its contract.

(2) Establishing and operating a procedure for determining such claims for contraceptive services in accordance with § 2560.503–1 of this chapter.

(3) Complying with disclosure and other requirements applicable to group health plans under Title I of ERISA with respect to such benefits.

[78 FR 39894, July 2, 2013]

§ 2510.3–21 Definition of "Fiduciary."

(a)–(b) [Reserved]

(c) *Investment advice*. (1) A person shall be deemed to be rendering ''investment advice'' to an employee benefit plan, within the meaning of section 3(21)(A)(ii) of the Employee Retirement Income Security Act of 1974 (the Act) and this paragraph, only if:

(i) Such person renders advice to the plan as to the value of securities or other property, or makes recommendation as to the advisability of investing in, purchasing, or selling securities or other property; and

(ii) Such person either directly or indirectly (e.g., through or together with any affiliate)—

(A) Has discretionary authority or control, whether or not pursuant to agreement, arrangement or understanding, with respect to purchasing or selling securities or other property for the plan; or

(B) Renders any advice described in paragraph (c)(1)(i) of this section on a regular basis to the plan pursuant to a mutual agreement, arrangement or understanding, written or otherwise, between such person and the plan or a fiduciary with respect to the plan, that such services will serve as a primary

basis for investment decisions with respect to plan assets, and that such person will render individualized investment advice to the plan based on the particular needs of the plan regarding such matters as, among other things, investment policies or strategy, overall portfolio composition, or diversification of plan investments.

(2) A person who is a fiduciary with respect to a plan by reason of rendering investment advice (as defined in paragraph (c)(1) of this section) for a fee or other compensation, direct or indirect, with respect to any moneys or other property of such plan, or having any authority or responsibility to do so, shall not be deemed to be a fiduciary regarding any assets of the plan with respect to which such person does not have any discretionary authority, discretionary control or discretionary responsibility, does not exercise any authority or control, does not render investment advice (as defined in paragraph (c)(1) of this section) for a fee or other compensation, and does not have any authority or responsibility to render such investment advice, provided that nothing in this paragraph shall be deemed to:

(i) Exempt such person from the provisions of section 405(a) of the Act concerning liability for fiduciary breaches by other fiduciaries with respect to any assets of the plan; or

(ii) Exclude such person from the definition of the term ''party in interest'' (as set forth in section 3(14)(B) of the Act) with respect to any assets of the plan.

(d) *Execution of securities transactions.* (1) A person who is a broker or dealer registered under the Securities Exchange Act of 1934, a reporting dealer who makes primary markets in securities of the United States Government or of an agency of the United States Government and reports daily to the Federal Reserve Bank of New York its positions with respect to such securities and borrowings thereon, or a bank supervised by the United States or a State, shall not be deemed to be a fiduciary, within the meaning of section 3(21)(A) of the Act, with respect to an employee benefit plan solely because such person executes transactions for the purchase or sale of securities on behalf of such plan in the ordinary course of its business as a broker, dealer, or bank, pursuant to instructions of a fiduciary with respect to such plan, if:

(i) Neither the fiduciary nor any affiliate of such fiduciary is such broker, dealer, or bank; and

(ii) The instructions specify (A) the security to be purchased or sold, (B) a price range within which such security is to be purchased or sold, or, if such security is issued by an open-end investment company registered under the Investment Company Act of 1940 (15 U.S.C. 80a–1, *et seq.*), a price which is determined in accordance with Rule 22c–1 under the Investment Company Act of 1940 (17 CFR 270.22c–1), (C) a time span during which such security may be purchased or sold (not to exceed five business days), and (D) the minimum or maximum quantity of such security which may be purchased or sold within such price range, or, in the case of a security issued by an open-end investment company registered under the Investment Company Act of 1940, the minimum or maximum quantity of such security which may be purchased or sold, or the value of such security in dollar amount which may be purchased or sold, at the price referred to in paragraph (d)(1)(ii)(B) of this section.

(2) A person who is a broker-dealer, reporting dealer, or bank which is a fiduciary with respect to an employee benefit plan solely by reason of the possession or exercise of discretionary authority or discretionary control in the management of the plan or the management or disposition of plan assets in connection with the execution of a transaction or transactions for the purchase or sale of securities on behalf of such plan which fails to comply with the provisions of paragraph (d)(1) of this section, shall not be deemed to be a fiduciary regarding any assets of the plan with respect to which such broker-dealer, reporting dealer or bank does not have any discretionary authority, discretionary control or discretionary responsibility, does not exercise any authority or control, does not render investment advice (as defined in paragraph (c)(1) of this section) for a fee or other compensation, and

does not have any authority or responsibility to render such investment advice, provided that nothing in this paragraph shall be deemed to:

(i) Exempt such broker-dealer, reporting dealer, or bank from the provisions of section 405(a) of the Act concerning liability for fiduciary breaches by other fiduciaries with respect to any assets of the plan; or

(ii) Exclude such broker-dealer, reporting dealer, or bank from the definition, of the term ''party in interest'' (as set forth in section 3(14)(B) of the Act) with respect to any assets of the plan.

(e) *Affiliate and control.* (1) For purposes of paragraphs (c) and (d) of this section, an ''affiliate'' of a person shall include:

(i) Any person directly or indirectly, through one or more intermediaries, controlling, controlled by, or under common control with such person;

(ii) Any officer, director, partner, employee or relative (as defined is section 3(15) of the Act) of such person; and

(iii) Any corporation or partnership of which such person is an officer, director or partner.

(2) For purposes of this paragraph, the term ''control'' means the power to exercise a controlling influence over the management or policies of a person other than an individual.

[40 FR 50843, Oct. 31, 1975]

§ 2510.3–37 Multiemployer plan.

(a) *General.* Section 3(37) of the Act contains in paragraphs (a)(i)–(iv) a number of criteria which an employee benefit plan must meet in order to be a multiemployer plan under the Act. Section 3(37) also provides that the Secretary may prescribe by regulation other requirements in addition to those contained in paragraphs (a)(i)–(iv). The purpose of this regulation is to establish such requirements.

(b) *Plans in existence before the effective date.* (1) A plan in existence before September 2, 1974, will be considered a multiemployer plan if it satisfies the requirements of section 3(37)(A)(i)–(iv) of the Act.

(2) For purposes of this section, a plan is considered to be in existence if:

(i)(A) The plan was reduced to writing and adopted by the participating employers and the employee organization (including, in the case of a corporate employer, formal approval by an employer's board of directors or shareholders, if required), even though no amounts had been contributed under the plan, and

(B) The plan has not been terminated; or

(ii)(A) There was a legally enforceable agreement to establish such a plan signed by the employers and the employee organization, and

(B) The contributions to be made to the plan were set forth in the agreement.

(iii) If a plan was in existence within the meaning of paragraph (b)(2)(i) or (ii) of this section, any other plan with which such existing plan is merged or consolidated shall also be considered to be in existence.

(c) *Plans not in existence before the effective date.* In addition to the provisions of section 3(37)(A)(i)–(iv) of the Act, a multiemployer plan established on or after September 2, 1974, must meet the requirement that it was established for a substantial business purpose. A substantial business purpose includes the interest of a labor organization in securing an employee benefit plan for its members. The following factors are relevant in determining whether a substantial business purpose existed for the establishment of a plan; any single factor may be sufficient to constitute a substantial business purpose:

(1) The extent to which the plan is maintained by a substantial number of unaffiliated contributing employers and covers a substantial portion of the trade, craft or industry in terms of employees or a substantial number of the employees in the trade, craft or industry in a locality or geographic area;

(2) The extent to which the plan provides benefits more closely related to years of service within the trade, craft or industry rather than with an employer, reflecting the fact that an employee's relationship with an employer maintaining the plan is generally short-term although service in the trade, craft or industry is generally long-term;

(3) The extent to which collective bargaining takes place on matters other than employee benefit plans between the employee organization and the employers maintaining the plan; and

(4) The extent to which the administrative burden and expense of providing benefits through single employer plans would be greater than through a multiemployer plan.

[40 FR 52008, Nov. 7, 1975]

§ 2510.3–38 Filing requirements for State registered investment advisers to be investment managers.

(a) *General.* Section 3(38) of the Act sets forth the criteria for a fiduciary to be an investment manager for purposes of section 405 of the Act. Subparagraph (B)(ii) of section 3(38) of the Act provides that, in the case of a fiduciary who is not registered under the Investment Advisers Act of 1940 by reason of paragraph (1) of section 203A(a) of such Act, the fiduciary must be registered as an investment adviser under the laws of the State in which it maintains its principal office and place of business, and, at the time the fiduciary files registration forms with such State to maintain the fiduciary's registration under the laws of such State, also files a copy of such forms with the Secretary of Labor. The purpose of this section is to set forth the exclusive means for investment advisers to satisfy the filing obligation with the Secretary described in subparagraph (B)(ii) of section 3(38) of the Act.

(b) *Filing requirement.* To satisfy the filing requirement with the Secretary in section 3(38)(B)(ii) of the Act, a fiduciary must be registered as an investment adviser with the State in which it maintains its principal office and place of business and file through the Investment Adviser Registration Depository (IARD), in accordance with applicable IARD requirements, the information required to be registered and maintain the fiduciary's registration as an investment adviser in such State. Submitting to the Secretary investment adviser registration forms filed with a State does not constitute compliance with the filing requirement in section 3(38)(B)(ii) of the Act.

(c) *Definitions.* For purposes of this section, the term ''Investment Adviser Registration Depository'' or ''IARD'' means the centralized electronic depository described in 17 CFR 275.203–1.

(d) *Cross reference.* Information for investment advisers on how to file through the IARD is available on the Securities and Exchange Commission website at *www.sec.gov/iard.*

[69 FR 52125, Aug. 24, 2004]

§ 2510.3–40 Plans Established or Maintained Under or Pursuant to Collective Bargaining Agreements Under Section 3(40)(A) of ERISA.

(a) *Scope and purpose.* Section 3(40)(A) of the Employee Retirement Income Security Act of 1974 (ERISA) provides that the term ''multiple employer welfare arrangement'' (MEWA) does not include an employee welfare benefit plan that is established or maintained under or pursuant to one or more agreements that the Secretary of Labor (the Secretary) finds to be collective bargaining agreements. This section sets forth criteria that represent a finding by the Secretary whether an arrangement is an employee welfare benefit plan established or maintained under or pursuant to one or more collective bargaining agreements. A plan is established or maintained under or pursuant to collective bargaining if it meets the criteria in this section. However, even if an entity meets the criteria in this section, it will not be an employee welfare benefit plan established or maintained under or pursuant to a collective bargaining agreement if it comes within the exclusions in the section. Nothing in or pursuant to this section shall constitute a finding for any purpose other than the exception for plans established or maintained under or pursuant to one or more collective bargaining agreements under section 3(40) of ERISA. In a particular case where there is an attempt to assert state jurisdiction or the application of state law with respect to a plan or other arrangement that allegedly is covered under Title I of ERISA, the Secretary has set forth a procedure for obtaining individualized findings at 29 CFR part 2570, subpart H.

(b) *General criteria.* The Secretary finds, for purposes of section 3(40) of

ERISA, that an employee welfare benefit plan is ''established or maintained under or pursuant to one or more agreements which the Secretary finds to be collective bargaining agreements'' for any plan year in which the plan meets the criteria set forth in paragraphs (b)(1), (2), (3), and (4) of this section, and is not excluded under paragraph (c) of this section.

(1) The entity is an employee welfare benefit plan within the meaning of section 3(1) of ERISA.

(2) At least 85% of the participants in the plan are:

(i) Individuals employed under one or more agreements meeting the criteria of paragraph (b)(3) of this section, under which contributions are made to the plan, or pursuant to which coverage under the plan is provided;

(ii) Retirees who either participated in the plan at least five of the last 10 years preceding their retirement, or

(A) Are receiving benefits as participants under a multiemployer pension benefit plan that is maintained under the same agreements referred to in paragraph (b)(3) of this section, and

(B) Have at least five years of service or the equivalent under that multiemployer pension benefit plan;

(iii) Participants on extended coverage under the plan pursuant to the requirements of a statute or court or administrative agency decision, including but not limited to the continuation coverage requirements of the Consolidated Omnibus Budget Reconciliation Act of 1985, sections 601–609, 29 U.S.C. 1169, the Family and Medical Leave Act, 29 U.S.C. 2601 *et seq.*, the Uniformed Services Employment and Reemployment Rights Act of 1994, 38 U.S.C. 4301 *et seq.*, or the National Labor Relations Act, 29 U.S.C. 158(a)(5);

(iv) Participants who were active participants and whose coverage is otherwise extended under the terms of the plan, including but not limited to extension by reason of self-payment, hour bank, long or short-term disability, furlough, or temporary unemployment, provided that the charge to the individual for such extended coverage is no more than the applicable premium under section 604 of the Act;

(v) Participants whose coverage under the plan is maintained pursuant to a reciprocal agreement with one or more other employee welfare benefit plans that are established or maintained under or pursuant to one or more collective bargaining agreements and that are multiemployer plans;

(vi) Individuals employed by:

(A) An employee organization that sponsors, jointly sponsors, or is represented on the association, committee, joint board of trustees, or other similar group of representatives of the parties who sponsor the plan;

(B) The plan or associated trust fund;

(C) Other employee benefit plans or trust funds to which contributions are made pursuant to the same agreement described in paragraph (b)(3) of this section; or

(D) An employer association that is the authorized employer representative that actually engaged in the collective bargaining that led to the agreement that references the plan as described in paragraph (b)(3) of this section;

(vii) Individuals who were employed under an agreement described in paragraph (b)(3) of this section, provided that they are employed by one or more employers that are parties to an agreement described in paragraph (b)(3) and are covered under the plan on terms that are generally no more favorable than those that apply to similarly situated individuals described in paragraph (b)(2)(i) of this section;

(viii) Individuals (other than individuals described in paragraph (b)(2)(i) of this section) who are employed by employers that are bound by the terms of an agreement described in paragraph (b)(3) of this section and that employ personnel covered by such agreement, and who are covered under the plan on terms that are generally no more favorable than those that apply to such covered personnel. For this purpose, such individuals in excess of 10% of the total population of participants in the plan are disregarded;

(ix) Individuals who are, or were for a period of at least three years, employed under one or more agreements between or among one or more ''carriers'' (including ''carriers by air'') and one or more ''representatives'' of employees for collective bargaining purposes and as defined by the Railway Labor Act, 45

U.S.C. 151 *et seq.*, providing for such individuals' current or subsequent participation in the plan, or providing for contributions to be made to the plan by such carriers; or

(x) Individuals who are licensed marine pilots operating in United States ports as a state-regulated enterprise and are covered under an employee welfare benefit plan that meets the definition of a qualified merchant marine plan, as defined in section 415(b)(2)(F) of the Internal Revenue Code (26 U.S.C.).

(3) The plan is incorporated or referenced in a written agreement between one or more employers and one or more employee organizations, which agreement, itself or together with other agreements among the same parties:

(i) Is the product of a *bona fide* collective bargaining relationship between the employers and the employee organization(s);

(ii) Identifies employers and employee organization(s) that are parties to and bound by the agreement;

(iii) Identifies the personnel, job classifications, and/or work jurisdiction covered by the agreement;

(iv) Provides for terms and conditions of employment in addition to coverage under, or contributions to, the plan; and

(v) Is not unilaterally terminable or automatically terminated solely for non-payment of benefits under, or contributions to, the plan.

(4) For purposes of paragraph (b)(3)(i) of this section, the following factors, among others, are to be considered in determining the existence of a bona fide collective bargaining relationship. In any proceeding initiated under 29 CFR part 2570 subpart H, the existence of a bona fide collective bargaining relationship under paragraph (b)(3)(i) shall be presumed where at least four of the factors set out in paragraphs (b)(4)(i) through (viii) of this section are established. In such a proceeding, the Secretary may also consider whether other objective or subjective indicia of actual collective bargaining and representation are present as set out in paragraph (b)(4)(ix) of this section.

(i) The agreement referred to in paragraph (b)(3) of this section provides for contributions to a labor-management trust fund structured according to section 302(c)(5), (6), (7), (8), or (9) of the Taft-Hartley Act, 29 U.S.C. 186(c)(5), (6), (7), (8) or (9), or to a plan lawfully negotiated under the Railway Labor Act;

(ii) The agreement referred to in paragraph (b)(3) of this section requires contributions by substantially all of the participating employers to a multiemployer pension plan that is structured in accordance with section 401 of the Internal Revenue Code (26 U.S.C.) and is either structured in accordance with section 302(c)(5) of the Taft-Hartley Act, 29 U.S.C. 186(c)(5), or is lawfully negotiated under the Railway Labor Act, and substantially all of the active participants covered by the employee welfare benefit plan are also eligible to become participants in that pension plan;

(iii) The predominant employee organization that is a party to the agreement referred to in paragraph (b)(3) of this section has maintained a series of agreements incorporating or referencing the plan since before January 1, 1983;

(iv) The predominant employee organization that is a party to the agreement referred to in paragraph (b)(3) of this section has been a national or international union, or a federation of national and international unions, or has been affiliated with such a union or federation, since before January 1, 1983;

(v) A court, government agency, or other third-party adjudicatory tribunal has determined, in a contested or adversary proceeding, or in a government-supervised election, that the predominant employee organization that is a party to the agreement described in paragraph (b)(3) of this section is the lawfully recognized or designated collective bargaining representative with respect to one or more bargaining units of personnel covered by such agreement;

(vi) Employers who are parties to the agreement described in paragraph (b)(3) of this section pay at least 75% of the premiums or contributions required for the coverage of active participants

under the plan or, in the case of a retiree-only plan, the employers pay at least 75% of the premiums or contributions required for the coverage of the retirees. For this purpose, coverage under the plan for dental or vision care, coverage for excepted benefits under 29 CFR 2590.732(b), and amounts paid by participants and beneficiaries as co-payments or deductibles in accordance with the terms of the plan are disregarded;

(vii) The predominant employee organization that is a party to the agreement described in paragraph (b)(3) of this section provides, sponsors, or jointly sponsors a hiring hall(s) and/or a state-certified apprenticeship program(s) that provides services that are available to substantially all active participants covered by the plan;

(viii) The agreement described in paragraph (b)(3) of this section has been determined to be a *bona fide* collective bargaining agreement for purposes of establishing the prevailing practices with respect to wages and supplements in a locality, pursuant to a prevailing wage statute of any state or the District of Columbia.

(ix) There are other objective or subjective indicia of actual collective bargaining and representation, such as that arm's-length negotiations occurred between the parties to the agreement described in paragraph (b)(3) of this section; that the predominant employee organization that is party to such agreement actively represents employees covered by such agreement with respect to grievances, disputes, or other matters involving employment terms and conditions other than coverage under, or contributions to, the employee welfare benefit plan; that there is a geographic, occupational, trade, organizing, or other rationale for the employers and bargaining units covered by such agreement; that there is a connection between such agreement and the participation, if any, of self-employed individuals in the employee welfare benefit plan established or maintained under or pursuant to such agreement.

(c) *Exclusions*. An employee welfare benefit plan shall not be deemed to be ''established or maintained under or pursuant to one or more agreements which the Secretary finds to be collective bargaining agreements'' for any plan year in which:

(1) The plan is self-funded or partially self-funded and is marketed to employers or sole proprietors

(i) By one or more insurance producers as defined in paragraph (d) of this section;

(ii) By an individual who is disqualified from, or ineligible for, or has failed to obtain, a license to serve as an insurance producer to the extent that the individual engages in an activity for which such license is required; or

(iii) By individuals (other than individuals described in paragraphs (c)(1)(i) and (ii) of this section) who are paid on a commission-type basis to market the plan.

(iv) For the purposes of this paragraph (c)(1):

(A) ''Marketing'' does not include administering the plan, consulting with plan sponsors, counseling on benefit design or coverage, or explaining the terms of coverage available under the plan to employees or union members;

(B) ''Marketing'' does include the marketing of union membership that carries with it plan participation by virtue of such membership, except for membership in unions representing insurance producers themselves;

(2) The agreement under which the plan is established or maintained is a scheme, plan, stratagem, or artifice of evasion, a principal intent of which is to evade compliance with state law and regulations applicable to insurance; or

(3) There is fraud, forgery, or willful misrepresentation as to the factors relied on to demonstrate that the plan satisfies the criteria set forth in paragraph (b) of this section.

(d) *Definitions*. (1) *Active participant* means a participant who is not retired and who is not on extended coverage under paragraphs (b)(2)(iii) or (b)(2)(iv) of this section.

(2) *Agreement* means the contract embodying the terms and conditions mutually agreed upon between or among the parties to such agreement. Where the singular is used in this section, the plural is automatically included.

(3) *Individual employed* means any natural person who furnishes services

to another person or entity in the capacity of an employee under common law, without regard to any specialized definitions or interpretations of the terms ''employee,'' ''employer,'' or ''employed'' under federal or state statutes other than ERISA.

(4) *Insurance producer* means an agent, broker, consultant, or producer who is an individual, entity, or sole proprietor that is licensed under the laws of the state to sell, solicit, or negotiate insurance.

(5) *Predominant employee organization* means, where more than one employee organization is a party to an agreement, either the organization representing the plurality of individuals employed under such agreement, or organizations that in combination represent the majority of such individuals.

(e) *Examples*. The operation of the provisions of this section may be illustrated by the following examples.

Example 1. Plan A has 500 participants, in the following 4 categories of participants under paragraph (b)(2) of this section:

Categories of participants	Total number	Nexus group	Non-nexus
1. Individuals working under CBAs	335 (67%)	335 (67%)	0
2. Retirees	50 (10%)	50 (10%)	0
3. "Special Class"—Non-CBA, non-CBA-alumni	100 (20%)	50 (10%)	50 (10%)
4. Non-nexus participants	15 (3%)	0	15 (3%)
Total	500 (100%)	435 (87%)	65 (13%)

In determining whether at least 85% of Plan A's participant population is made up of individuals with the required nexus to the collective bargaining agreement as required by paragraph (b)(2) of this section, the Plan may count as part of the nexus group only 50 (10% of the total plan population) of the 100 individuals described in paragraph (b)(2)(viii) of this section. That is because the number of individuals meeting the category of individuals in paragraph (b)(2)(viii) exceeds 10% of the total participant population by 50 individuals. The paragraph specifies that of those individuals who would otherwise be deemed to be nexus individuals because they are the type of individuals described in paragraph (b)(2)(viii), the number in excess of 10% of the total plan population may not be counted in the nexus group. Here, 50 of the 100 individuals employed by signatory employers, but not covered by the collective bargaining agreement, are counted as nexus individuals and 50 are not counted as nexus individuals. Nonetheless, the Plan satisfies the 85% criterion under paragraph (b)(2) because a total of 435 (335 individuals covered by the collective bargaining agreement, plus 50 retirees, plus 50 individuals employed by signatory employers), or 87%, of the 500 participants in Plan A are individuals who may be counted as nexus participants under paragraph (b)(2). Beneficiaries (e.g., spouses, dependent children, etc.) are not counted to determine whether the 85% test has been met.

Example 2. (i) International Union MG and its Local Unions have represented people working primarily in a particular industry for over 60 years. Since 1950, most of their collective bargaining agreements have called for those workers to be covered by the National MG Health and Welfare Plan. During that time, the number of union-represented workers in the industry, and the number of active participants in the National MG Health and Welfare Plan, first grew and then declined. New Locals were formed and later were shut down. Despite these fluctuations, the National MG Health and Welfare Plan meets the factors described in paragraphs (b)(4)(iii) and (iv) of this section, as the plan has been in existence pursuant to collective bargaining agreements to which the International Union and its affiliates have been parties since before January 1, 1983.

(ii) Assume the same facts, except that on January 1, 1999, International Union MG merged with International Union RE to form International Union MRGE. MRGE and its Locals now represent the active participants in the National MG Health and Welfare Plan and in the National RE Health and Welfare Plan, which, for 45 years, had been maintained under collective bargaining agreements negotiated by International Union RE and its Locals. Since International Union MRGE is the continuation of, and successor to, the MG and RE unions, the two plans continue to meet the factors in paragraphs (b)(4)(iii) and (iv) of this section. This also would be true if the two plans were merged.

(iii) Assume the same facts as in paragraphs (i) and (ii) of this Example. In addition to maintaining the health and welfare plans described in those paragraphs, International Union MG also maintained the National MG Pension Plan and International Union RE maintained the National RE Pension Plan. When the unions merged and the health and welfare plans were merged, National MG Pension Plan and National RE Pension Plan were merged to form National MRGE Pension Plan. When the unions merged, the employees and retirees covered under the pre-merger plans continued to be covered under the post-merger plans pursuant to the collective bargaining agreements and also were given credit in the post-merger plans for their years of service and coverage in the pre-merger plans. Retirees who originally were covered under the pre-merger

plans and continue to be covered under the post-merger plans based on their past service and coverage would be considered to be ''retirees'' for purposes of 2550.3–40(b)(2)(ii). Likewise, bargaining unit alumni who were covered under the pre-merger plans and continued to be covered under the post-merger plans based on their past service and coverage and their continued employment with employers that are parties to an agreement described in paragraph (b)(3) of this section would be considered to be bargaining unit alumni for purposes of 2550.3–40(b)(2)(vii).

Example 3. Assume the same facts as in paragraph (ii) of Example 2 with respect to International Union MG. However, in 1997, one of its Locals and the employers with which it negotiates agree to set up a new multiemployer health and welfare plan that only covers the individuals represented by that Local Union. That plan would not meet the factor in paragraph (b)(4)(iii) of this section, as it has not been incorporated or referenced in collective bargaining agreements since before January 1, 1983.

Example 4. (i) Pursuant to a collective bargaining agreement between various employers and Local 2000, the employers contribute $2 per hour to the Fund for every hour that a covered employee works under the agreement. The covered employees are automatically entitled to health and disability coverage from the Fund for every calendar quarter the employees have 300 hours of additional covered service in the preceding quarter. The employees do not need to make any additional contributions for their own coverage, but must pay $250 per month if they want health coverage for their dependent spouse and children. Because the employer payments cover 100% of the required contributions for the employees' own coverage, the Local 2000 Employers Health and Welfare Fund meets the ''75% employer payment'' factor under paragraph (b)(4)(vi) of this section.

(ii) Assume, however, that the negotiated employer contribution rate was $1 per hour, and the employees could only obtain health coverage for themselves if they also elected to contribute $1 per hour, paid on a pre-tax basis through salary reduction. The Fund would not meet the 75% employer payment factor, even though the employees' contributions are treated as employer contributions for tax purposes. Under ERISA, and therefore under this section, elective salary reduction contributions are treated as employee contributions. The outcome would be the same if a uniform employee contribution rate applied to all employees, whether they had individual or family coverage, so that the $1 per hour employee contribution qualified an employee for his or her own coverage and, if he or she had dependents, dependent coverage as well.

Example 5. Arthur is a licensed insurance broker, one of whose clients is Multiemployer Fund M, a partially self-funded plan. Arthur takes bids from insurance companies on behalf of Fund M for the insured portion of its coverage, helps the trustees to evaluate the bids, and places the Fund's health insurance coverage with the carrier that is selected. Arthur also assists the trustees of Fund M in preparing material to explain the plan and its benefits to the participants, as well as in monitoring the insurance company's performance under the contract. At the Trustees' request, Arthur meets with a group of employers with which the union is negotiating for their employees' coverage under Fund M, and he explains the cost structure and benefits that Fund M provides. Arthur is not engaged in marketing within the meaning of paragraph (c)(1) of this section, so the fact that he provides these administrative services and sells insurance to the Fund itself does not affect the plan's status as a plan established or maintained under or pursuant to a collective bargaining agreement. This is the case whether or how he is compensated.

Example 6. Assume the same facts as Example 5, except that Arthur has a group of clients who are unrelated to the employers bound by the collective bargaining agreement, whose employees would not be ''nexus group'' members, and whose insurance carrier has withdrawn from the market in their locality. He persuades the client group to retain him to find them other coverage. The client group has no relationship with the labor union that represents the participants in Fund M. However, Arthur offers them coverage under Fund M and persuades the Fund's Trustees to allow the client group to join Fund M in order to broaden Fund M's contribution base. Arthur's activities in obtaining coverage for the unrelated group under Fund M constitutes marketing through an insurance producer; Fund M is a MEWA under paragraph (c)(1) of this section.

Example 7. Union A represents thousands of construction workers in a three-state geographic region. For many years, Union A has maintained a standard written collective bargaining agreement with several hundred large and small building contractors, covering wages, hours, and other terms and conditions of employment for all work performed in Union A's geographic territory. The terms of those agreements are negotiated every three years between Union A and a multiemployer Association, which signs on behalf of those employers who have delegated their bargaining authority to the Association. Hundreds of other employers—including both local and traveling contractors—have chosen to become bound to the terms of Union A's standard area agreement for various periods of time and in various ways, such as by signing short-form binders

or ''me too'' agreements, executing a single job or project labor agreement, or entering into a subcontracting arrangement with a signatory employer. All of these employ individuals represented by Union A and contribute to Plan A, a self-insured multiemployer health and welfare plan established and maintained under Union A's standard area agreement. During the past year, the trustees of Plan A have brought lawsuits against several signatory employers seeking contributions allegedly owed, but not paid to the trust. In defending that litigation, a number of employers have sworn that they never intended to operate as union contractors, that their employees want nothing to do with Union A, that Union A procured their assent to the collective bargaining agreement solely by threats and fraudulent misrepresentations, and that Union A has failed to file certain reports required by the Labor Management Reporting and Disclosure Act. In at least one instance, a petition for a decertification election has been filed with the National Labor Relations Board. In this example, Plan A meets the criteria for a regulatory finding under this section that it is a multiemployer plan established and maintained under or pursuant to one or more collective bargaining agreements, assuming that its participant population satisfies the 85% test of paragraph (b)(2) of this section and that none of the disqualifying factors in paragraph (c) of this section is present. Plan A's status for the purpose of this section is not affected by the fact that some of the employers who deal with Union A have challenged Union A's conduct, or have disputed under labor statutes and legal doctrines other than ERISA section 3(40) the validity and enforceability of their putative contract with Union A, regardless of the outcome of those disputes.

Example 8. Assume the same facts as Example 7. Plan A's benefits consultant recently entered into an arrangement with the Medical Consortium, a newly formed organization of health care providers, which allows the Plan to offer a broader range of health services to Plan A's participants while achieving cost savings to the Plan and to participants. Union A, Plan A, and Plan A's consultant each have added a page to their Web sites publicizing the new arrangement with the Medical Consortium. Concurrently, Medical Consortium's Web site prominently publicizes its recent affiliation with Plan A and the innovative services it makes available to the Plan's participants. Union A has mailed out informational packets to its members describing the benefit enhancements and encouraging election of family coverage. Union A has also begun distributing similar material to workers on hundreds of non-union construction job sites within its geographic territory. In this example, Plan A remains a plan established and maintained under or pursuant to one or more collective bargaining agreements under section 3(40) of ERISA. Neither Plan A's relationship with a new organization of health care providers, nor the use of various media to publicize Plan A's attractive benefits throughout the area served by Union A, alters Plan A's status for purpose of this section.

Example 9. Assume the same facts as in Example 7. Union A undertakes an area-wide organizing campaign among the employees of all the health care providers who belong to the Medical Consortium. When soliciting individual employees to sign up as union members, Union A distributes Plan A's information materials and promises to bargain for the same coverage. At the same time, when appealing to the employers in the Medical Consortium for voluntary recognition, Union A promises to publicize the Consortium's status as a group of unionized health care service providers. Union A eventually succeeds in obtaining recognition based on its majority status among the employees working for Medical Consortium employers. The Consortium, acting on behalf of its employer members, negotiates a collective bargaining agreement with Union A that provides terms and conditions of employment, including coverage under Plan A. In this example, Plan A still meets the criteria for a regulatory finding that it is collectively bargained under section 3(40) of ERISA. Union A's recruitment and representation of a new occupational category of workers unrelated to the construction trade, its promotion of attractive health benefits to achieve organizing success, and the Plan's resultant growth, do not take Plan A outside the regulatory finding.

Example 10. Assume the same facts as in Example 7. The Medical Consortium, a newly formed organization, approaches Plan A with a proposal to make money for Plan A and Union A by enrolling a large group of employers, their employees, and self-employed individuals affiliated with the Medical Consortium. The Medical Consortium obtains employers' signatures on a generic document bearing Union A's name, labeled ''collective bargaining agreement,'' which provides for health coverage under Plan A and compliance with wage and hour statutes, as well as other employment laws. Employees of signatory employers sign enrollment documents for Plan A and are issued membership cards in Union A; their membership dues are regularly checked off along with their monthly payments for health coverage. Self-employed individuals similarly receive union membership cards and make monthly payments, which are divided between Plan A and the Union. Aside from health coverage matters, these new participants have little or no contact with Union A. The new participants enrolled through the Consortium amount to

18% of the population of Plan A during the current Plan Year. In this example, Plan A now fails to meet the criteria in paragraphs (b)(2) and (b)(3) of this section, because more than 15% of its participants are individuals who are not employed under agreements that are the product of a *bona fide* collective bargaining relationship and who do not fall within any of the other nexus categories set forth in paragraph (b)(2) of this section. Moreover, even if the number of additional participants enrolled through the Medical Consortium, together with any other participants who did not fall within any of the nexus categories, did not exceed 15% of the total participant population under the plan, the circumstances in this example would trigger the disqualification of paragraph (c)(2) of this section, because Plan A now is being maintained under a substantial number of agreements that are a ''scheme, plan, stratagem or artifice of evasion'' intended primarily to evade compliance with state laws and regulations pertaining to insurance. In either case, the consequence of adding the participants through the Medical Consortium is that Plan A is now a MEWA for purposes of section 3(40) of ERISA and is not exempt from state regulation by virtue of ERISA.

(f) *Cross-reference. See* 29 CFR part 2570, subpart H for procedural rules relating to proceedings seeking an Administrative Law Judge finding by the Secretary under section 3(40) of ERISA.

(g) Effect of proceeding seeking Administrative Law Judge Section 3(40) Finding.

(1) An Administrative Law Judge finding issued pursuant to the procedures in 29 CFR part 2570, subpart H will constitute a finding whether the entity in that proceeding is an employee welfare benefit plan established or maintained under or pursuant to an agreement that the Secretary finds to be a collective bargaining agreement for purposes of section 3(40) of ERISA.

(2) Nothing in this section or in 29 CFR part 2570, subpart H is intended to provide the basis for a stay or delay of a state administrative or court proceeding or enforcement of a subpoena.

[68 FR 17480, Apr. 9, 2003]

§ 2510.3–101 Definition of "plan assets"—plan investments.

(a) *In general.* (1) This section describes what constitute assets of a plan with respect to a plan's investment in another entity for purposes of subtitle A, and parts 1 and 4 of subtitle B, of title I of the Act and section 4975 of the Internal Revenue Code. Paragraph (a)(2) of this section contains a general rule relating to plan investments. Paragraphs (b) through (f) of this section define certain terms that are used in the application of the general rule. Paragraph (g) of this section describes how the rules in this section are to be applied when a plan owns property jointly with others or where it acquires an equity interest whose value relates solely to identified assets of an issuer. Paragraph (h) of this section contains special rules relating to particular kinds of plan investments. Paragraph (i) describes the assets that a plan acquires when it purchases certain guaranteed mortgage certificates. Paragraph (j) of this section contains examples illustrating the operation of this section. The effective date of this section is set forth in paragraph (k) of this section.

(2) Generally, when a plan invests in another entity, the plan's assets include its investment, but do not, solely by reason of such investment, include any of the underlying assets of the entity. However, in the case of a plan's investment in an equity interest of an entity that is neither a publicly-offered security nor a security issued by an investment company registered under the Investment Company Act of 1940 its assets include both the equity interest and an undivided interest in each of the underlying assets of the entity, unless it is established that—

(i) The entity is an operating company, or

(ii) Equity participation in the entity by benefit plan investors is not significant.

Therefore, any person who exercises authority or control respecting the management or disposition of such underlying assets, and any person who provides investment advice with respect to such assets for a fee (direct or indirect), is a fiduciary of the investing plan.

(b) *Equity interests and publicly-offered securities.* (1) The term *equity interest* means any interest in an entity other than an instrument that is treated as indebtedness under applicable local law and which has no substantial equity

features. A profits interest in a partnership, an undivided ownership interest in property and a beneficial interest in a trust are equity interests.

(2) A *publicly-offered security* is a security that is freely transferable, part of a class of securities that is widely held and either—

(i) Part of a class of securities registered under section 12(b) or 12(g) of the Securities Exchange Act of 1934, or

(ii) Sold to the plan as part of an offering of securities to the public pursuant to an effective registration statement under the Securities Act of 1933 and the class of securities of which such security is a part is registered under the Securities Exchange Act of 1934 within 120 days (or such later time as may be allowed by the Securities and Exchange Commission) after the end of the fiscal year of the issuer during which the offering of such securities to the public occurred.

(3) For purposes of paragraph (b)(2) of this section, a class of securities is ''widely-held'' only if it is a class of securities that is owned by 100 or more investors independent of the issuer and of one another. A class of securities will not fail to be widely-held solely because subsequent to the initial offering the number of independent investors falls below 100 as a result of events beyond the control of the issuer.

(4) For purposes of paragraph (b)(2) of this section, whether a security is ''freely transferable'' is a factual question to be determined on the basis of all relevant facts and circumstances. If a security is part of an offering in which the minimum investment is $10,000 or less, however, the following factors ordinarily will not, alone or in combination, affect a finding that such securities are freely transferable:

(i) Any requirement that not less than a minimum number of shares or units of such security be transferred or assigned by any investor, provided that such requirement does not prevent transfer of all of the then remaining shares or units held by an investor;

(ii) Any prohibition against transfer or assignment of such security or rights in respect thereof to an ineligible or unsuitable investor;

(iii) Any restriction on, or prohibition against, any transfer or assignment which would either result in a termination or reclassification of the entity for Federal or state tax purposes or which would violate any state or Federal statute, regulation, court order, judicial decree, or rule of law;

(iv) Any requirement that reasonable transfer or administrative fees be paid in connection with a transfer or assignment;

(v) Any requirement that advance notice of a transfer or assignment be given to the entity and any requirement regarding execution of documentation evidencing such transfer or assignment (including documentation setting forth representations from either or both of the transferor or transferee as to compliance with any restriction or requirement described in this paragraph (b)(4) of this section or requiring compliance with the entity's governing instruments);

(vi) Any restriction on substitution of an assignee as a limited partner of a partnership, including a general partner consent requirement, provided that the economic benefits of ownership of the assignor may be transferred or assigned without regard to such restriction or consent (other than compliance with any other restriction described in this paragraph (b)(4)) of this section;

(vii) Any administrative procedure which establishes an effective date, or an event, such as the completion of the offering, prior to which a transfer or assignment will not be effective; and

(viii) Any limitation or restriction on transfer or assignment which is not created or imposed by the issuer or any person acting for or on behalf of such issuer.

(c) *Operating company*. (1) An ''operating company'' is an entity that is primarily engaged, directly or through a majority owned subsidiary or subsidiaries, in the production or sale of a product or service other than the investment of capital. The term ''operating company'' includes an entity which is not described in the preceding sentence, but which is a ''venture capital operating company'' described in paragraph (d) or a ''real estate operating company'' described in paragraph (e).

(2) [Reserved]

(d) *Venture capital operating company.* (1) An entity is a ''venture capital operating company'' for the period beginning on an initial valuation date described in paragraph (d)(5)(i) and ending on the last day of the first ''annual valuation period'' described in paragraph (d)(5)(ii) (in the case of an entity that is not a venture capital operating company immediately before the determination) or for the 12 month period following the expiration of an ''annual valuation period'' described in paragraph (d)(5)(ii) (in the case of an entity that is a venture capital operating company immediately before the determination) if—

(i) On such initial valuation date, or at any time within such annual valuation period, at least 50 percent of its assets (other than short-term investments pending long-term commitment or distribution to investors), valued at cost, are invested in venture capital investments described in paragraph (d)(3)(i) or derivative investments described in paragraph (d)(4); and

(ii) During such 12 month period (or during the period beginning on the initial valuation date and ending on the last day of the first annual valuation period), the entity, in the ordinary course of its business, actually exercises management rights of the kind described in paragraph (d)(3)(ii) with respect to one or more of the operating companies in which it invests.

(2)(i) A venture capital operating company described in paragraph (d)(1) shall continue to be treated as a venture capital operating company during the ''distribution period'' described in paragraph (d)(2)(ii). An entity shall not be treated as a venture capital operating company at any time after the end of the distribution period.

(ii) The ''distribution period'' referred to in paragraph (d)(2)(i) begins on a date established by a venture capital operating company that occurs after the first date on which the venture capital operating company has distributed to investors the proceeds of at least 50 percent of the highest amount of its investments (other than short-term investments made pending long-term commitment or distribution to investors) outstanding at any time from the date it commenced business (determined on the basis of the cost of such investments) and ends on the earlier of—

(A) The date on which the company makes a ''new portfolio investment'', or

(B) The expiration of 10 years from the beginning of the distribution period.

(iii) For purposes of paragraph (d)(2)(ii)(A), a ''new portfolio investment'' is an investment other than—

(A) An investment in an entity in which the venture capital operating company had an outstanding venture capital investment at the beginning of the distribution period which has continued to be outstanding at all times during the distribution period, or

(B) A short-term investment pending long-term commitment or distribution to investors.

(3)(i) For purposes of this paragraph (d) a ''venture capital investment'' is an investment in an operating company (other than a venture capital operating company) as to which the investor has or obtains management rights.

(ii) The term ''management rights'' means contractual rights directly between the investor and an operating company to substantially participate in, or substantially influence the conduct of, the management of the operating company.

(4)(i) An investment is a ''derivative investment'' for purposes of this paragraph (d) if it is—

(A) A venture capital investment as to which the investor's management rights have ceased in connection with a public offering of securities of the operating company to which the investment relates, or

(B) An investment that is acquired by a venture capital operating company in the ordinary course of its business in exchange for an existing venture capital investment in connection with:

(*1*) A public offering of securities of the operating company to which the existing venture capital investment relates, or

(*2*) A merger or reorganization of the operating company to which the existing venture capital investment relates,

provided that such merger or reorganization is made for independent business reasons unrelated to extinguishing management rights.

(ii) An investment ceases to be a derivative investment on the later of:

(A) 10 years from the date of the acquisition of the original venture capital investment to which the derivative investment relates, or

(B) 30 months from the date on which the investment becomes a derivative investment.

(5) For purposes of this paragraph (d) and paragraph (e)—

(i) An ''initial valuation date'' is the later of—

(A) Any date designated by the company within the 12 month period ending with the effective date of this section, or

(B) The first date on which an entity makes an investment that is not a short-term investment of funds pending long-term commitment.

(ii) An ''annual valuation period'' is a preestablished annual period, not exceeding 90 days in duration, which begins no later than the anniversary of an entity's initial valuation date. An annual valuation period, once established may not be changed except for good cause unrelated to a determination under this paragraph (d) or paragraph (e).

(e) *Real estate operating company*. An entity is a ''real estate operating company'' for the period beginning on an initial valuation date described in paragraph (d)(5)(i) and ending on the last day of the first ''annual valuation period'' described in paragraph (d)(5)(ii) (in the case of an entity that is not a real estate operating company immediately before the determination) or for the 12 month period following the expiration of an annual valuation period described in paragraph (d)(5)(ii) (in the case of an entity that is a real estate operating company immediately before the determination) if:

(1) On such initial valuation date, or on any date within such annual valuation period, at least 50 percent of its assets, valued at cost (other than short-term investments pending long-term commitment or distribution to investors), are invested in real estate which is managed or developed and with respect to which such entity has the right to substantially participate directly in the management or development activities; and

(2) During such 12 month period (or during the period beginning on the initial valuation date and ending on the last day of the first annual valuation period) such entity in the ordinary course of its business is engaged directly in real estate management or development activities.

(f) *Participation by benefit plan investors*. (1) Equity participation in an entity by benefit plan investors is ''significant'' on any date if, immediately after the most recent acquisition of any equity interest in the entity, 25 percent or more of the value of any class of equity interests in the entity is held by benefit plan investors (as defined in paragraph (f)(2)). For purposes of determinations pursuant to this paragraph (f), the value of any equity interests held by a person (other than a benefit plan investor) who has discretionary authority or control with respect to the assets of the entity or any person who provides investment advice for a fee (direct or indirect) with respect to such assets, or any affiliate of such a person, shall be disregarded.

(2) A ''benefit plan investor'' is any of the following—

(i) Any employee benefit plan (as defined in section 3(3) of the Act), whether or not it is subject to the provisions of title I of the Act,

(ii) Any plan described in section 4975(e)(1) of the Internal Revenue Code,

(iii) Any entity whose underlying assets include plan assets by reason of a plan's investment in the entity.

(3) An ''affiliate'' of a person includes any person, directly or indirectly, through one or more intermediaries, controlling, controlled by, or under common control with the person. For purposes of this paragraph (f)(3), ''control'', with respect to a person other than an individual, means the power to exercise a controlling influence over the management or policies of such person.

(g) *Joint ownership*. For purposes of this section, where a plan jointly owns property with others, or where the value of a plan's equity interest in an

entity relates solely to identified property of the entity, such property shall be treated as the sole property of a separate entity.

(h) *Specific rules relating to plan investments.* Notwithstanding any other provision of this section—

(1) Except where the entity is an investment company registered under the Investment Company Act of 1940, when a plan acquires or holds an interest in any of the following entities its assets include its investment and an undivided interest in each of the underlying assets of the entity:

(i) A group trust which is exempt from taxation under section 501(a) of the Internal Revenue Code pursuant to the principles of Rev. Rul. 81–100, 1981–1 C.B. 326,

(ii) A common or collective trust fund of a bank,

(iii) A separate account of an insurance company, other than a separate account that is maintained solely in connection with fixed contractual obligations of the insurance company under which the amounts payable, or credited, to the plan and to any participant or beneficiary of the plan (including an annuitant) are not affected in any manner by the investment performance of the separate account.

(2) When a plan acquires or holds an interest in any entity (other than an insurance company licensed to do business in a State) which is established or maintained for the purpose of offering or providing any benefit described in section 3(1) or section 3(2) of the Act to participants or beneficiaries of the investing plan, its assets will include its investment and an undivided interest in the underlying assets of that entity.

(3) When a plan or a related group of plans owns all of the outstanding equity interests (other than director's qualifying shares) in an entity, its assets include those equity interests and all of the underlying assets of the entity. This paragraph (h)(3) does not apply, however, where all of the outstanding equity interests in an entity are qualifying employer securities described in section 407(d)(5) of the Act, owned by one or more eligible individual account plan(s) (as defined in section 407(d)(3) of the Act) maintained by the same employer, provided that substantially all of the participants in the plan(s) are, or have been, employed by the issuer of such securities or by members of a group of affiliated corporations (as determined under section 407(d)(7) of the Act) of which the issuer is a member.

(4) For purposes of paragraph (h)(3), a ''related group'' of employee benefit plans consists of every group of two or more employee benefit plans—

(i) Each of which receives 10 percent or more of its aggregate contributions from the same employer or from members of the same controlled group of corporations (as determined under section 1563(a) of the Internal Revenue Code, without regard to section 1563(a)(4) thereof); or

(ii) Each of which is either maintained by, or maintained pursuant to a collective bargaining agreement negotiated by, the same employee organization or affiliated employee organizations. For purposes of this paragraph, an ''affiliate'' of an employee organization means any person controlling, controlled by, or under common control with such organization, and includes any organization chartered by the same parent body, or governed by the same constitution and bylaws, or having the relation of parent and subordinate.

(i) *Governmental mortgage pools.* (1) Where a plan acquires a guaranteed governmental mortgage pool certificate, as defined in paragraph (i)(2), the plan's assets include the certificate and all of its rights with respect to such certificate under applicable law, but do not, solely by reason of the plan's holding of such certificate, include any of the mortgages underlying such certificate.

(2) A ''guaranteed governmental mortgage pool certificate'' is a certificate backed by, or evidencing an interest in, specified mortgages or participation interests therein and with respect to which interest and principal payable pursuant to the certificate is guaranteed by the United States or an agency or instrumentality thereof. The term ''guaranteed governmental mortgage pool certificate'' includes a mortgage pool certificate with respect to which interest and principal payable

pursuant to the certificate is guaranteed by:

(i) The Government National Mortgage Association;

(ii) The Federal Home Loan Mortgage Corporation; or

(iii) The Federal National Mortgage Association.

(j) *Examples.* The principles of this section are illustrated by the following examples:

(1) A plan, P, acquires debentures issued by a corporation, T, pursuant to a private offering. T is engaged primarily in investing and reinvesting in precious metals on behalf of its shareholders, all of which are benefit plan investors. By its terms, the debenture is convertible to common stock of T at P's option. At the time of P's acquisition of the debentures, the conversion feature is incidental to T's obligation to pay interest and principal. Although T is not an operating company, P's assets do not include an interest in the underlying assets of T because P has not acquired an *equity* interest in T. However, if P exercises its option to convert the debentures to common stock, it will have acquired an equity interest in T at that time and (assuming that the common stock is not a publicly-offered security and that there has been no change in the composition of the other equity investors in T) P's assets would then include an undivided interest in the underlying assets of T.

(2) A plan, P, acquires a limited partnership interest in a limited partnership, U, which is established and maintained by A, a general partner in U. U has only one class of limited partnership interests. U is engaged in the business of investing and reinvesting in securities. Limited partnership interests in U are offered privately pursuant to an exemption from the registration requirements of the Securities Act of 1933. P acquires 15 percent of the value of all the outstanding limited partnership interests in U, and, at the time of P's investment, a governmental plan owns 15 percent of the value of those interests. U is not an operating company because it is engaged primarily in the investment of capital. In addition, equity participation by benefit plan investors is significant because immediately after P's investment such investors hold more than 25 percent of the limited partnership interests in U. Accordingly, P's assets include an undivided interest in the underlying assets of U, and A is a fiduciary of P with respect to such assets by reason of its discretionary authority and control over U's assets. Although the governmental plan's investment is taken into account for purposes of determining whether equity participation by benefit plan investors is significant, nothing in this section imposes fiduciary obligations on A with respect to that plan.

(3) Assume the same facts as in paragraph (j)(2), except that P acquires only 5 percent of the value of all the outstanding limited partnership interests in U, and that benefit plan investors in the aggregate hold only 10 percent of the value of the limited partnership interests in U. Under these facts, there is no significant equity participation by benefit plan investors in U, and, accordingly, P's assets include its limited partnership interest in U, but do not include any of the underlying assets of U. Thus, A would not be a fiduciary of P by reason of P's investment.

(4) Assume the same facts as in paragraph (j)(3) and that the aggregate value of the outstanding limited partnership interests in U is $10,000 (and that the value of the interests held by benefit plan investors is thus $1000). Also assume that an affiliate of A owns limited partnership interests in U having a value of $6500. The value of the limited partnership interests held by A's affiliate are disregarded for purposes of determining whether there is significant equity participation in U by benefit plan investors. Thus, the percentage of the aggregate value of the limited partnership interests held by benefit plan investors in U for purposes of such a determination is approximately 28.6% ($1000/$3500). Therefore there is significant benefit plan investment in T.

(5) A plan, P, invests in a limited partnership, V, pursuant to a private offering. There is significant equity participation by benefit plan investors in V. V acquires equity positions in the companies in which it invests, and, in connection with these investments, V negotiates terms that give it the right to participate in or influence the management of those companies. Some of these investments are in publicly-offered securities and some are in securities acquired in private offerings. During its most recent valuation period, more than 50 percent of V's assets, valued at cost, consisted of investments with respect to which V obtained management rights of the kind described above. V's managers routinely consult informally with, and advise, the management of only one portfolio company with respect to which it has management rights, although it devotes substantial resources to its consultations with that company. With respect to the other portfolio companies, V relies on the managers of other entities to consult with and advise the companies' management. V is a venture capital operating company and therefore P has acquired its limited partnership investment, but has not acquired an interest in any of the underlying assets of V. Thus, none of the managers of V would be fiduciaries with respect to P solely by reason of its investment. In this situation, the mere fact that V does not participate in or influence the management of all its portfolio companies does not

affect its characterization as a venture capital operating company.

(6) Assume the same facts as in paragraph (j)(5) and the following additional facts: V invests in debt securities as well as equity securities of its portfolio companies. In some cases V makes debt investments in companies in which it also has an equity investment; in other cases V only invests in debt instruments of the portfolio company. V's debt investments are acquired pursuant to private offerings and V negotiates covenants that give it the right to substantially participate in or to substantially influence the conduct of the management of the companies issuing the obligations. These covenants give V more significant rights with respect to the portfolio companies' management than the covenants ordinarily found in debt instruments of established, creditworthy companies that are purchased privately by institutional investors. V routinely consults with and advises the management of its portfolio companies. The mere fact that V's investments in portfolio companies are debt, rather than equity, will not cause V to fail to be a venture capital operating company, provided it actually obtains the right to substantially participate in or influence the conduct of the management of its portfolio companies and provided that in the ordinary course of its business it actually exercises those rights.

(7) A plan, P, invests (pursuant to a private offering) in a limited partnership, W, that is engaged primarily in investing and reinvesting assets in equity positions in real property. The properties acquired by W are subject to long-term leases under which substantially all management and maintenance activities with respect to the property are the responsibility of the lessee. W is not engaged in the management or development of real estate merely because it assumes the risks of ownership of income-producing real property, and W is not a real estate operating company. If there is significant equity participation in W by benefit plan investors, P will be considered to have acquired an undivided interest in each of the underlying assets of W.

(8) Assume the same facts as in paragraph (j)(7) except that W owns several shopping centers in which individual stores are leased for relatively short periods to various merchants (rather than owning properties subject to long-term leases under which substantially all management and maintenance activities are the responsibility of the lessee). W retains independent contractors to manage the shopping center properties. These independent contractors negotiate individual leases, maintain the common areas and conduct maintenance activities with respect to the properties. W has the responsibility to supervise and the authority to terminate the independent contractors. During its most recent valuation period more than 50 percent of W's assets, valued at cost, are invested in such properties. W is a real estate operating company. The fact that W does not have its own employees who engage in day-to-day management and development activities is only one factor in determining whether it is actively managing or developing real estate. Thus, P's assets include its interest in W, but do not include any of the underlying assets of W.

(9) A plan, P, acquires a limited partnership interest in X pursuant to a private offering. There is significant equity participation in X by benefit plan investors. X is engaged in the business of making ''convertible loans'' which are structured as follows: X lends a specified percentage of the cost of acquiring real property to a borrower who provides the remaining capital needed to make the acquisition. This loan is secured by a mortgage on the property. Under the terms of the loan, X is entitled to receive a fixed rate of interest payable out of the initial cash flow from the property and is also entitled to that portion of any additional cash flow which is equal to the percentage of the acquisition cost that is financed by its loan. Simultaneously with the making of the loan, the borrower also gives X an option to purchase an interest in the property for the original principal amount of the loan at the expiration of its initial term. X's percentage interest in the property, if it exercises this option, would be equal to the percentage of the acquisition cost of the property which is financed by its loan. The parties to the transaction contemplate that the option ordinarily will be exercised at the expiration of the loan term if the property has appreciated in value. X and the borrower also agree that, if the option is exercised, they will form a limited partnership to hold the property. X negotiates loan terms which give it rights to substantially influence, or to substantially participate in, the management of the property which is acquired with the proceeds of the loan. These loan terms give X significantly greater rights to participate in the management of the property than it would obtain under a conventional mortgage loan. In addition, under the terms of the loan, X and the borrower ratably share any capital expenditures relating to the property. During its most recent valuation period, more than 50 percent of the value of X's assets valued at cost consisted of real estate investments of the kind described above. X, in the ordinary course of its business, routinely exercises its management rights and frequently consults with and advises the borrower and the property manager. Under these facts, X is a real estate operating company. Thus, P's assets include its interest in X, but do not include any of the underlying assets of X.

(10) In a private transaction, a plan, P, acquires a 30 percent participation in a debt instrument that is held by a bank. Since the value of the participation certificate relates solely to the debt instrument, that debt instrument is, under paragraph (g), treated as the sole asset of a separate entity. Equity participation in that entity by benefit plan investors is significant since the value of the plan's participation exceeds 25 percent of the value of the instrument. In addition, the hypothetical entity is not an operating company because it is primarily engaged in the investment of capital (*i.e.*, holding the debt instrument). Thus, P's assets include the participation and an undivided interest in the debt instrument, and the bank is a fiduciary of P to the extent it has discretionary authority or control over the debt instrument.

(11) In a private transaction, a plan, P, acquires 30% of the value of a class of equity securities issued by an operating company, Y. These securities provide that dividends shall be paid solely out of earnings attributable to certain tracts of undeveloped land that are held by Y for investment. Under paragraph (g), the property is treated as the sole asset of a separate entity. Thus, even though Y is an operating company, the hypothetical entity whose sole assets are the undeveloped tracts of land is not an operating company. Accordingly, P is considered to have acquired an undivided interest in the tracts of land held by Y. Thus, Y would be a fiduciary of P to the extent it exercises discretionary authority or control over such property.

(12) A medical benefit plan, P, acquires a beneficial interest in a trust, Z, that is not an insurance company licensed to do business in a State. Under this arrangement, Z will provide the benefits to the participants and beneficiaries of P that are promised under the terms of the plan. Under paragraph (h)(2), P's assets include its beneficial interest in Z and an undivided interest in each of its underlying assets. Thus, persons with discretionary authority or control over the assets of Z would be fiduciaries of P.

(k) *Effective date and transitional rules.* (1) In general, this section is effective for purposes of identifying the assets of a plan on or after March 13, 1987. Except as a defense, this section shall not apply to investments in an entity in existence on March 13, 1987, if no plan subject to title I of the Act or plan described in section 4975(e)(1) of the Code (other than a plan described in section 4975(g)(2) or (3)) acquires an interest in the entity from an issuer or underwriter at any time on or after March 13, 1987 except pursuant to a contract binding on the plan in effect on March 13, 1987 with an issuer or underwriter to acquire an interest in the entity.

(2) Notwithstanding paragraph (k)(1), this section shall not, except as a defense, apply to a real estate entity described in section 11018(a) of Pub. L. 99–272.

[51 FR 41280, Nov. 13, 1986, as amended at 51 FR 47226, Dec. 31, 1986]

§ 2510.3–102 Definition of "plan assets"—participant contributions.

(a)(1) *General rule.* For purposes of subtitle A and parts 1 and 4 of subtitle B of title I of ERISA and section 4975 of the Internal Revenue Code only (but without any implication for and may not be relied upon to bar criminal prosecutions under 18 U.S.C. 664), the assets of the plan include amounts (other than union dues) that a participant or beneficiary pays to an employer, or amounts that a participant has withheld from his wages by an employer, for contribution or repayment of a participant loan to the plan, as of the earliest date on which such contributions or repayments can reasonably be segregated from the employer's general assets.

(2) *Safe harbor.* (i) For purposes of paragraph (a)(1) of this section, in the case of a plan with fewer than 100 participants at the beginning of the plan year, any amount deposited with such plan not later than the 7th business day following the day on which such amount is received by the employer (in the case of amounts that a participant or beneficiary pays to an employer), or the 7th business day following the day on which such amount would otherwise have been payable to the participant in cash (in the case of amounts withheld by an employer from a participant's wages), shall be deemed to be contributed or repaid to such plan on the earliest date on which such contributions or participant loan repayments can reasonably be segregated from the employer's general assets.

(ii) This paragraph (a)(2) sets forth an optional alternative method of compliance with the rule set forth in paragraph (a)(1) of this section. This paragraph (a)(2) does not establish the exclusive means by which participant

contribution or participant loan repayment amounts shall be considered to be contributed or repaid to a plan by the earliest date on which such contributions or repayments can reasonably be segregated from the employer's general assets.

(b) *Maximum time period for pension benefit plans.* (1) Except as provided in paragraph (b)(2) of this section, with respect to an employee pension benefit plan as defined in section 3(2) of ERISA, in no event shall the date determined pursuant to paragraph (a)(1) of this section occur later than the 15th business day of the month following the month in which the participant contribution or participant loan repayment amounts are received by the employer (in the case of amounts that a participant or beneficiary pays to an employer) or the 15th business day of the month following the month in which such amounts would otherwise have been payable to the participant in cash (in the case of amounts withheld by an employer from a participant's wages).

(2) With respect to a SIMPLE plan that involves SIMPLE IRAs (*i.e.,* Simple Retirement Accounts, as described in section 408(p) of the Internal Revenue Code), in no event shall the date determined pursuant to paragraph (a)(1) of this section occur later than the 30th calendar day following the month in which the participant contribution amounts would otherwise have been payable to the participant in cash.

(c) *Maximum time period for welfare benefit plans.* With respect to an employee welfare benefit plan as defined in section 3(1) of ERISA, in no event shall the date determined pursuant to paragraph (a)(1) of this section occur later than 90 days from the date on which the participant contribution amounts are received by the employer (in the case of amounts that a participant or beneficiary pays to an employer) or the date on which such amounts would otherwise have been payable to the participant in cash (in the case of amounts withheld by an employer from a participant's wages).

(d) *Extension of maximum time period for pension plans.* (1) With respect to participant contributions received or withheld by the employer in a single month, the maximum time period provided under paragraph (b) of this section shall be extended for an additional 10 business days for an employer who—

(i) Provides a true and accurate written notice, distributed in a manner reasonably designed to reach all the plan participants within 5 business days after the end of such extension period, stating—

(A) That the employer elected to take such extension for that month;

(B) That the affected contributions have been transmitted to the plan; and

(C) With particularity, the reasons why the employer cannot reasonably segregate the participant contributions within the time period described in paragraph (b) of this section;

(ii) Prior to such extension period, obtains a performance bond or irrevocable letter of credit in favor of the plan and in an amount of not less than the total amount of participant contributions received or withheld by the employer in the previous month; and

(iii) Within 5 business days after the end of such extension period, provides a copy of the notice required under paragraph (d)(1)(i) of this section to the Secretary, along with a certification that such notice was provided to the participants and that the bond or letter of credit required under paragraph (d)(1)(ii) of this section was obtained.

(2) The performance bond or irrevocable letter of credit required in paragraph (d)(1)(ii) of this section shall be guaranteed by a bank or similar institution that is supervised by the Federal government or a State government and shall remain in effect for 3 months after the month in which the extension expires.

(3)(i) An employer may not elect an extension under this paragraph (d) more than twice in any plan year unless the employer pays to the plan an amount representing interest on the participant contributions that were subject to all the extensions within such plan year.

(ii) The amount representing interest in paragraph (d)(3)(i) of this section shall be the greater of—

(A) The amount that otherwise would have been earned on the participant contributions from the date on which

such contributions were paid to, or withheld by, the employer until such money is transmitted to the plan had such contributions been invested during such period in the investment alternative available under plan which had the highest rate of return; or

(B) Interest at a rate equal to the underpayment rate defined in section 6621(a)(2) of the Internal Revenue Code from the date on which such contributions were paid to, or withheld by, the employer until such money is fully restored to the plan.

(e) *Definition.* For purposes of this section, the term *business day* means any day other than a Saturday, Sunday or any day designated as a holiday by the Federal Government.

(f) *Examples.* The requirements of this section are illustrated by the following examples:

(1) Employer A sponsors a 401(k) plan. There are 30 participants in the 401(k) plan. A has one payroll period for its employees and uses an outside payroll processing service to pay employee wages and process deductions. A has established a system under which the payroll processing service provides payroll deduction information to A within 1 business day after the issuance of paychecks. A checks this information for accuracy within 5 business days and then forwards the withheld employee contributions to the plan. The amount of the total withheld employee contributions is deposited with the trust that is maintained under the plan on the 7th business day following the date on which the employees are paid. Under the safe harbor in paragraph (a)(2) of this section, when the participant contributions are deposited with the plan on the 7th business day following a pay date, the participant contributions are deemed to be contributed to the plan on the earliest date on which such contributions can reasonably be segregated from A's general assets.

(2) Employer B is a large national corporation which sponsors a 401(k) plan with 600 participants. B has several payroll centers and uses an outside payroll processing service to pay employee wages and process deductions. Each payroll center has a different pay period. Each center maintains separate accounts on its books for purposes of accounting for that center's payroll deductions and provides the outside payroll processor the data necessary to prepare employee paychecks and process deductions. The payroll processing service issues the employees' paychecks and deducts all payroll taxes and elective employee deductions. The payroll processing service forwards the employee payroll deduction data to B on the date of issuance of paychecks. B checks this data for accuracy and transmits this data along with the employee 401(k) deferral funds to the plan's investment firm within 3 business days. The plan's investment firm deposits the employee 401(k) deferral funds into the plan on the day received from B. The assets of B's 401(k) plan would include the participant contributions no later than 3 business days after the issuance of paychecks.

(3) Employer C sponsors a self-insured contributory group health plan with 90 participants. Several former employees have elected, pursuant to the provisions of ERISA section 602, 29 U.S.C. 1162, to pay C for continuation of their coverage under the plan. These checks arrive at various times during the month and are deposited in the employer's general account at bank Z. Under paragraphs (a) and (c) of this section, the assets of the plan include the former employees' payments as soon after the checks have cleared the bank as C could reasonably be expected to segregate the payments from its general assets, but in no event later than 90 days after the date on which the former employees' participant contributions are received by C. If, however, C deposits the former employees' payments with the plan no later than the 7th business day following the day on which they are received by C, the former employees' participant contributions will be deemed to be contributed to the plan on the earliest date on which such contributions can reasonably be segregated from C's general assets.

(g) *Effective date.* This section is effective February 3, 1997.

(h) *Applicability date for collectively-bargained plans.* (1) Paragraph (b) of

this section applies to collectively bargained plans no sooner than the later of—

(i) February 3, 1997; or

(ii) The first day of the plan year that begins after the expiration of the last to expire of any applicable bargaining agreement in effect on August 7, 1996.

(2) Until paragraph (b) of this section applies to a collectively bargained plan, paragraph (c) of this section shall apply to such plan as if such plan were an employee welfare benefit plan.

(i) *Optional postponement of applicability*. (1) The application of paragraph (b) of this section shall be postponed for up to an additional 90 days beyond the effective date described in paragraph (g) of this section for an employer who, prior to February 3, 1997—

(i) Provides a true and accurate written notice, distributed in a manner designed to reach all the plan participants before the end of February 3, 1997, stating—

(A) That the employer elected to postpone such applicability;

(B) The date that the postponement will expire; and

(C) With particularity the reasons why the employer cannot reasonably segregate the participant contributions within the time period described in paragraph (b) of this section, by February 3, 1997;

(ii) Obtains a performance bond or irrevocable letter of credit in favor of the plan and in an amount of not less than the total amount of participant contributions received or withheld by the employer in the previous 3 months;

(iii) Provides a copy of the notice required under paragraph (i)(1)(i) of this section to the Secretary, along with a certification that such notice was provided to the participants and that the bond or letter of credit required under paragraph (i)(1)(ii) of this section was obtained; and

(iv) For each month during which such postponement is in effect, provides a true and accurate written notice to the plan participants indicating the date on which the participant contributions received or withheld by the employer during such month were transmitted to the plan.

(2) The notice required in paragraph (i)(1)(iv) of this section shall be distributed in a manner reasonably designed to reach all the plan participants within 10 days after transmission of the affected participant contributions.

(3) The bond or letter of credit required under paragraph (i)(1)(ii) shall be guaranteed by a bank or similar institution that is supervised by the Federal government or a State government and shall remain in effect for 3 months after the month in which the postponement expires.

(4) During the period of any postponement of applicability with respect to a plan under this paragraph (i), paragraph (c) of this section shall apply to such plan as if such plan were an employee welfare benefit plan.

[61 FR 41233, Aug. 7, 1996, as amended at 62 FR 62936, Nov. 25, 1997; 75 FR 2076, Jan. 14, 2010]

SUBCHAPTER C—REPORTING AND DISCLOSURE UNDER THE EMPLOYEE RETIREMENT INCOME SECURITY ACT OF 1974

PART 2520—RULES AND REGULATIONS FOR REPORTING AND DISCLOSURE

Subpart A—General Reporting and Disclosure Requirements

Sec.
2520.101–1 Duty of reporting and disclosure.
2520.101–2 Filing by multiple employer welfare arrangements and certain other related entities.
2520.101–3 Notice of blackout periods under individual account plans.
2520.101–4 Annual funding notice for multiemployer defined benefit pension plans.
2520.101–5 [Reserved]
2520.101–6 Multiemployer pension plan information made available on request.

Subpart B—Contents of Plan Descriptions and Summary Plan Descriptions

2520.102–1 [Reserved]
2520.102–2 Style and format of summary plan description.
2520.102–3 Contents of summary plan description.
2520.102–4 Option for different summary plan descriptions.

Subpart C—Annual Report Requirements

2520.103–1 Contents of the annual report.
2520.103–2 Contents of the annual report for a group insurance arrangement.
2520.103–3 Exemption from certain annual reporting requirements for assets held in a common or collective trust.
2520.103–4 Exemption from certain annual reporting requirements for assets held in an insurance company pooled separate account.
2520.103–5 Transmittal and certification of information to plan administrator for annual reporting purposes.
2520.103–6 Definition of reportable transaction for Annual Return/Report.
2520.103–8 Limitation on scope of accountant's examination.
2520.103–9 Direct filing for bank or insurance carrier trusts and accounts.
2520.103–10 Annual report financial schedules.
2520.103–11 Assets held for investment purposes.
2520.103–12 Limited exemption and alternative method of compliance for annual reporting of investments in certain entities.
2520.103–13 Special terminal report for abandoned plans.

Subpart D—Provisions Applicable to Both Reporting and Disclosure Requirements

2520.104–1 General.
2520.104–2—2520.104–3 [Reserved]
2520.104–4 Alternative method of compliance for certain successor pension plans.
2520.104–5—2520.104–6 [Reserved]
2520.104–20 Limited exemption for certain small welfare plans.
2520.104–21 Limited exemption for certain group insurance arrangements.
2520.104–22 Exemption from reporting and disclosure requirements for apprenticeship and training plans.
2520.104–23 Alternative method of compliance for pension plans for certain selected employees.
2520.104–24 Exemption for welfare plans for certain selected employees.
2520.104–25 Exemption from reporting and disclosure for day care centers.
2520.104–26 Limited exemption for certain unfunded dues financed welfare plans maintained by employee organizations.
2520.104–27 Alternative method of compliance for certain unfunded dues financed pension plans maintained by employee organizations.
2520.104–28 [Reserved]
2520.104–41 Simplified annual reporting requirements for plans with fewer than 100 participants.
2520.104–42 Waiver of certain actuarial information in the annual report.
2520.104–43 Exemption from annual reporting requirement for certain group insurance arrangements.
2520.104–44 Limited exemption and alternative method of compliance for annual reporting by unfunded plans and by certain insured plans.
2520.104–45 [Reserved]
2520.104–46 Waiver of examination and report of an independent qualified public accountant for employee benefit plans with fewer than 100 participants.
2520.104–47 Limited exemption and alternative method of compliance for filing of insurance company financial reports.
2520.104–48 Alternative method of compliance for model simplified employee pensions—IRS Form 5305–SEP.
2520.104–49 Alternative method of compliance for certain simplified employee pensions.
2520.104–50 Short plan years, deferral of accountant's examination and report.

Subpart E—Reporting Requirements

2520.104a–1 Filing with the Secretary of Labor.
2520.104a–2 Electronic filing of annual reports.
2520.104a–3—2520.104a–4 [Reserved]
2520.104a–5 Annual report filing requirements.
2520.104a–6 Annual reporting for plans which are part of a group insurance arrangement.
2520.104a–7 [Reserved]
2520.104a–8 Requirement to furnish documents to the Secretary of Labor on request.

Subpart F—Disclosure Requirements

2520.104b–1 Disclosure.
2520.104b–2 Summary plan description.
2520.104b–3 Summary of material modifications to the plan and changes in the information required to be included in the summary plan description.
2520.104b–4 Alternative methods of compliance for furnishing the summary plan description and summaries of material modifications of a pension plan to a retired participant, a separated participant with vested benefits, and a beneficiary receiving benefits.
2520.104b–10 Summary Annual Report.
2520.104b–30 Charges for documents.

Subpart G—Recordkeeping Requirements

2520.107–1 Use of electronic media for maintenance and retention of records.

AUTHORITY: 29 U.S.C. 1021–1024, 1027, 1029–31, 1059, 1134 and 1135; Secretary of Labor's Order 1–2011, 77 FR 1088 (January 9, 2012). Sec. 2520.101–2 also issued under 29 U.S.C. 1181–1183, 1181 note, 1185, 1185a–d, and 1191–1191c. Sec. 2520.103–1 also issued under 26 U.S.C. 6058 note. Sec. 2520.101–6 also issued under 29 U.S.C. 1021(k); Secs. 2520.102–3, 2520.104b–1 and 2520.104b–3 also issued under 29 U.S.C. 1003, 1181–1183, 1181 note, 1185, 1185a–d, 1191, and 1191a–c. Secs. 2520.104b–1 and 2520.107 also issued under 26 U.S.C. 401 note, 111 Stat. 788;

Subpart A—General Reporting and Disclosure Requirements

§ 2520.101–1 Duty of reporting and disclosure.

The procedures for implementing the plan administrator's duty of reporting to the Secretary of Labor and disclosing information to participants and beneficiaries are located in subparts D, E and F of this part.

(Approved by the Office of Management and Budget under control number 1210–0016)

[41 FR 16962, Apr. 23, 1976, as amended at 46 FR 62845, Dec. 29, 1981]

§ 2520.101–2 Filing by multiple employer welfare arrangements and certain other related entities.

(a) *Basis and scope.* Section 101(g) of the Employee Retirement Income Security Act (ERISA), as amended by the Patient Protection and Affordable Care Act, requires the Secretary of Labor (the Secretary) to establish, by regulation, a requirement that multiple employer welfare arrangements (MEWAs) providing benefits that consist of medical care (as described in paragraph (b)(6) of this section), which are not group health plans, to register with the Secretary prior to operating in a State. Section 101(g) also permits the Secretary to require, by regulation, such MEWAs to report, not more frequently than annually, in such form and manner as the Secretary may require, for the purpose of determining the extent to which the requirements of part 7 of subtitle B of title I of ERISA (part 7) are being carried out in connection with such benefits. Section 734 of ERISA provides that the Secretary may promulgate such regulations as may be necessary or appropriate to carry out the provisions of part 7. This section sets out requirements for reporting by MEWAs that provide benefits that consist of medical care and by certain entities that claim not to be a MEWA solely due to the exception in section 3(40)(A)(i) of ERISA (referred to in this section as Entities Claiming Exception or ECEs). The reporting requirements apply regardless of whether the MEWA or ECE is a group health plan.

(b) *Definitions.* As used in this section, the following definitions apply:

(1) *Administrator* means—(i) The person specifically so designated by the terms of the instrument under which the MEWA or ECE is operated;

(ii) If the MEWA or ECE is a group health plan and the administrator is not so designated, the plan sponsor (as defined in section 3(16)(B) of ERISA); or

(iii) In the case of a MEWA or ECE for which an administrator is not designated and a plan sponsor cannot be identified, jointly and severally, the person or persons actually responsible (whether or not so designated under the terms of the instrument under which the MEWA or ECE is operated) for the control, disposition, or management of the cash or property received by or contributed to the MEWA or ECE, irrespective of whether such control, disposition, or management is exercised directly by such person or persons or indirectly through an agent, custodian, or trustee designated by such person or persons.

(2) *Entity Claiming Exception (ECE)* means an entity that claims it is not a MEWA on the basis that the entity is established or maintained pursuant to one or more agreements that the Secretary finds to be collective bargaining agreements within the meaning of section 3(40)(A)(i) of ERISA and § 2510.3–40.

(3) *Excepted benefits* means *excepted benefits* within the meaning of section 733(c) of ERISA and § 2590.701–2 of this chapter.

(4) *Group health plan* means a *group health plan* within the meaning of section 733(a) of ERISA and § 2590.701–2 of this chapter.

(5) *Health insurance issuer* means a *health insurance issuer* within the meaning of section 733(b)(2) of ERISA and § 2590.701–2 of this chapter.

(6) *Medical care* means *medical care* within the meaning of section 733(a)(2) of ERISA and § 2590.701–2 of this chapter.

(7) *Multiple employer welfare arrangement (MEWA)* means a *multiple employer welfare arrangement* within the meaning of section 3(40) of ERISA.

(8) *Operating* means any activity including but not limited to marketing, soliciting, providing, or offering to provide benefits consisting of *medical care*.

(9) *Origination* means, with regard to an ECE, the occurrence of any of the following events (an ECE is considered to have been *originated* only when an event described below occurs)—

(i) The ECE begins operating with regard to the employees of two or more employers (including one or more self-employed individuals);

(ii) The ECE begins operating following a merger with another ECE (unless all of the ECEs that participate in the merger previously were last originated at least three years prior to the merger); or

(iii) The number of employees receiving coverage for medical care under the ECE is at least 50 percent greater than the number of such employees on the last day of the previous calendar year (unless the increase is due to a merger with another ECE under which all ECEs that participate in the merger were last originated at least three years prior to the merger).

(10) *Reporting or to report* means to file the Form M–1 as required pursuant to sections 101(g) of ERISA; § 2520.101–2; or the instructions to the Form M–1.

(11) *Special filing event* means, with regard to an ECE—

(i) The ECE begins knowingly operating in any additional State or States that were not indicated on a previous report filed pursuant to paragraph (e)(1)(i) or (f)(2)(i) of this section; or

(ii) The ECE experiences a material change as defined in the Form M–1 instructions.

(12) *State* means *State* within the meaning of § 2590.701–2 of this chapter.

(c) *Persons required to report*—(1) *General rule*. Except as provided in paragraph (c)(2) of this section, the following persons are required to report under this section:

(i) The administrator of a MEWA regardless of whether the entity is a group health plan; and

(ii) The administrator of an ECE during the three-year period following an event described in paragraph (b)(9) of this section.

(2) *Exceptions*—(i) Nothing in this paragraph (c) shall be construed to require reporting under this section by the administrator of a MEWA or ECE described under this paragraph (c)(2)(i).

(A) A MEWA or ECE licensed or authorized to operate as a health insurance issuer in every State in which it offers or provides coverage for medical care to employees;

(B) A MEWA or ECE that provides coverage that consists solely of excepted benefits, which are not subject to ERISA part 7. If the MEWA or ECE provides coverage that consists of both

excepted benefits and other benefits for medical care that are not excepted benefits, the administrator of the MEWA or ECE is required to report under this section;

(C) A MEWA or ECE that is a group health plan not subject to ERISA, including a governmental plan, church plan, or a plan maintained solely for the purpose of complying with workmen's compensation laws, within the meaning of sections 4(b)(1), 4(b)(2), or 4(b)(3) of ERISA, respectively; or

(D) A MEWA or ECE that provides coverage only through group health plans that are not covered by ERISA, including governmental plans, church plans, or plans maintained solely for the purpose of complying with workmen's compensation laws within the meaning of sections 4(b)(1), 4(b)(2), or 4(b)(3) of ERISA, respectively (or other arrangements not covered by ERISA, such as health insurance coverage offered to individuals other than in connection with a group health plan, known as individual market coverage).

(ii) Nothing in this paragraph (c) shall be construed to require reporting under this section by the administrator of an entity that would not constitute a MEWA or ECE *but for* the following circumstances under this paragraph (c)(2)(ii).

(A) The entity provides coverage to the employees of two or more trades or businesses that share a common control interest of at least 25 percent at any time during the plan year, applying principles similar to the principles of section 414(c) of the Internal Revenue Code;

(B) The entity provides coverage to the employees of two or more employers due to a change in control of businesses (such as a merger or acquisition) that occurs for a purpose other than avoiding Form M–1 filing and is temporary in nature. For purposes of this paragraph, ''temporary'' means the MEWA or ECE does not extend beyond the end of the plan year following the plan year in which the change in control occurs; or

(C) The entity provides coverage to persons (excluding spouses and dependents) who are not employees or former employees of the plan sponsor, such as non-employee members of the board of directors or independent contractors, and the number of such persons who are not employees or former employees does not exceed one percent of the total number of employees or former employees covered under the arrangement, determined as of the last day of the year to be reported or, determined as of the 60th day following the date the MEWA or ECE began operating in a manner such that a filing is required pursuant to paragraph (e)(1)(i), (2), or (3) of this section.

(3) *Examples*. The rules of this paragraph (c) are illustrated by the following examples:

Example 1. (i) *Facts*. MEWA *A* begins operating by offering coverage to the employees of two or more employers on August 1, 2013. MEWA *A* is licensed or authorized to operate as a health insurance issuer in every State in which it offers coverage for medical care to employees.

(ii) *Conclusion*. In this *Example 1*, the administrator of MEWA *A* is not required to report via Form M–1. MEWA *A* meets the exception to the filing requirement in paragraph (c)(2)(i)(A) of this section because it is licensed or authorized to operate as a health insurance issuer in every State in which it offers coverage for medical care to employees.

Example 2. (i) *Facts*. Company *B* maintains a group health plan that provides benefits for medical care for its employees (and their dependents). Company *B* establishes a joint venture in which it has a 25 percent stock ownership interest, determined by applying the principles similar to the principles under section 414(c) of the Internal Revenue Code, and transfers some of its employees to the joint venture. Company *B* continues to cover these transferred employees under its group health plan.

(ii) *Conclusion*. In this *Example 2*, the administrator is not required to file the Form M–1 because Company *B's* group health plan meets the exception to the filing requirement in paragraph (c)(2)(ii)(A) of this section. This is because Company *B's* group health plan would not constitute a MEWA but for the fact that it provides coverage to two or more trades or businesses that share a common control interest of at least 25 percent.

Example 3. (i) *Facts*. Company *C* maintains a group health plan that provides benefits for medical care for its employees. The plan year of Company *C's* group health plan is the fiscal year for Company *C*, which is October 1st—September 30th. Therefore, October 1, 2012—September 30, 2013 is the 2013 plan year. Company *C* decides to sell a portion of its

business, Division *Z*, to Company *D*. Company *C* signs an agreement with Company *D* under which Division *Z* will be transferred to Company *D*, effective September 30, 2013. The change in control of Division *Z* therefore occurs on September 30, 2013. Under the terms of the agreement, Company *C* agrees to continue covering all of the employees that formerly worked for Division *Z* under its group health plan until Company *D* has established a new group health plan to cover these employees. Under the terms of the agreement, it is anticipated that Company *C* will not be required to cover the employees of Division *Z* under its group health plan beyond the end of the 2014 plan year, which is the plan year following the plan year in which the change in control of Division *Z* occurred.

(ii) *Conclusion*. In this *Example 3*, the administrator of Company *C's* group health plan is not required to report via the Form M–1 on March 1, 2014 for fiscal year 2013 because it is subject to the exception to the filing requirement in paragraph (c)(2)(ii)(B) of this section for an entity that would not constitute a MEWA but for the fact that it is created by a change in control of businesses that occurs for a purpose other than to avoid filing the Form M–1 and is temporary in nature. Under the exception, ''temporary'' means the MEWA does not extend beyond the end of the plan year following the plan year in which the change in control occurs. The administrator is not required to file the 2013 Form M–1 annual report because it is anticipated that Company *C* will not be required to cover the employees of Division *Z* under its group health plan beyond the end of the 2014 plan year, which is the plan year following the plan year in which the change in control of businesses occurred.

Example 4. (i) *Facts*. Company *E* maintains a group health plan that provides benefits for medical care for its employees (and their dependents) as well as certain independent contractors who are self-employed individuals. The plan is therefore a MEWA. The administrator of Company *E's* group health plan uses calendar year data to report for purposes of the Form M–1. The administrator of Company *E's* group health plan determines that the number of independent contractors covered under the group health plan as of the last day of calendar year 2013 is less than one percent of the total number of employees and former employees covered under the plan determined as of the last day of calendar year 2013.

(ii) *Conclusion*. In this *Example 4*, the administrator of Company *E's* group health plan is not required to report via the Form M–1 for calendar year 2013 (a filing that is otherwise due by March 1, 2014) because it is subject to the exception to the filing requirement provided in paragraph (c)(2)(ii)(C) of this section for entities that cover a very small number of persons who are not employees or former employees of the plan sponsor.

(d) *Information to be reported*—(1) Any reporting required by this section shall consist of a completed copy of the Form M–1 Report for Multiple Employer Welfare Arrangements (MEWAs) and Certain Entities Claiming Exception (ECEs) (Form M–1) and any additional statements required pursuant to the instructions for the Form M–1.

(2) *Rejected filings*.—The Secretary may reject any filing under this section if the Secretary determines that the filing is incomplete, in accordance with § 2560.502c–5 of this chapter.

(3) If the Secretary rejects a filing under paragraph (d)(2) of this section, and if a revised filing satisfactory to the Secretary is not submitted within 45 days after the notice of rejection, the Secretary may bring a civil action for such relief as may be appropriate (including penalties under section 502(c)(5) of ERISA and § 2560.502c–5 of this chapter).

(e) *Origination, registration, and other non-annual reporting requirements and timing*—(1) *General rule for ECEs*—(i) Except as provided in paragraph (e)(1)(ii) of this section, and subject to the limitations established by paragraph (c)(1)(ii) of this section, when an ECE experiences an event described in paragraphs (b)(9) or (b)(11) of this section, the administrator of the ECE shall file Form M–1 by the 30th day following the date of the event.

(ii) *Exception*. Paragraph (e)(1)(i) of this section does not apply to ECEs that experience an origination as described in paragraph (b)(9)(i) of this section. Such entities are required, subject to the limitations established by paragraph (c)(1)(ii) of this section, to file the Form M–1 30 days prior to the date of the event.

(2) *General rule for MEWAs*—(i) *In general*. Except as provided in paragraph (e)(2)(ii) of this section, the administrator of the MEWA is required to register with the Secretary by filing the Form M–1 30 days prior to operating in any State.

(ii) *Exception*. Paragraph (e)(2)(i) of this section does not apply to MEWAs that, prior to the effective date of this section, were already in operation in a

State (or States). Such entities are required to submit an annual filing pursuant to annual reporting rules described in paragraph (f)(2)(i) of this section for that State (or those States).

(3) *Special rule requiring MEWAs to make additional filings.* Subsequent to registering with the Secretary pursuant to paragraph (e)(2)(i) of this section, the administrator of a MEWA shall file the Form M–1:

(i) Within 30 days of knowingly operating in any additional State or States that were not indicated on a previous report filed pursuant to paragraph (e)(2)(i) or (f)(2)(i) of this section;

(ii) Within 30 days of the MEWA operating with regard to the employees of an additional employer (or employers, including one or more self-employed individuals) after a merger with another MEWA;

(iii) Within 30 days of the date the number of employees receiving coverage for medical care under the MEWA is at least 50 percent greater than the number of such employees on the last day of the previous calendar year; or

(iv) Within 30 days of experiencing a material change as defined in the Form M–1 instructions.

(4) *Anti-abuse rule.* If a MEWA or ECE neither offers nor provides benefits consisting of medical care within a State during the calendar year immediately following the year in which a filing is made by the ECE pursuant to paragraph (e)(1) of this section (due to an event described in paragraph (b)(9)(i) or (b)(11)(i) of this section) or a filing is made by the MEWA pursuant to paragraph (e)(2) or (3) of this section, with respect to operating in such State, such filing will be considered to have lapsed.

(5) *Multiple filings not required in certain circumstances.* If multiple filings are required under this paragraph (e), a single filing will satisfy this section so long as the filing is timely for each required filing.

(6) *Extensions.* (i) An extension may be granted for filing a report required by paragraph (e)(1), (2), or (3) of this section if the administrator complies with the extension procedure prescribed in the instructions to the Form M–1.

(ii) If the filing deadline set forth in this paragraph (e) is a Saturday, Sunday, or federal holiday, the form must be filed no later than the next business day.

(f) *Annual reporting requirements and timing*—(1) *Period for which reporting is required.* A completed copy of the Form M–1 is required to be filed for each calendar year during all or part of which the MEWA is operating and for each of the three calendar years following an origination during all or part of which the ECE is operating.

(2) *Filing deadline*—(i) *General March 1 filing due date for annual filings.* Except as provided in paragraph (f)(2)(ii) of this section, a completed copy of the Form M–1 is required to be filed on or before each March 1 that follows a period for which reporting is required (as described in paragraph (f)(1) of this section).

(ii) *Exception.* Paragraph (f)(2)(i) of this section does not apply to ECEs and MEWAs if, between October 1 and December 31, the entity is required to make a filing pursuant to paragraph (e)(1), (2), or (3) of this section and makes that filing timely.

(3) *Extensions.* (i) An extension may be granted for filing a report required by paragraph (f)(2)(i) of this section if the administrator complies with the extension procedure prescribed in the instructions to the Form M–1.

(ii) If the filing deadline set forth in this paragraph (f) is a Saturday, Sunday, or federal holiday, the form must be filed no later than the next business day.

(4) *Examples.* The rules of paragraphs (e) and (f) of this section are illustrated by the following examples:

Example 1. (i) *Facts.* MEWA *A* began offering coverage for medical care to the employees of two or more employers on July 1, 2003 (and continues to offer such coverage). MEWA *A* has satisfied all filing requirements to date.

(ii) *Conclusion.* In this *Example 1,* the administrator of MEWA *A* must continue to file a timely completed Form M–1 annual report each year, but the administrator is not required to register with the Secretary because MEWA *A* meets the exception to the registration requirement in paragraph (e)(2)(ii) of this section and has not experienced any event described in paragraph (e)(3) that would require registering with the Secretary.

Example 2. (i) *Facts*. On August 25, 2013, MEWA *B* is operating in State *P* and has made all appropriate filings related to those operations. On December 22, 2013 one of the employers that participates in MEWA *B* is awarded a new contract in State *Q*. The employer adds an office in State *Q* and the employees there are eligible to access its group health plan.

(ii) *Conclusion*. In this *Example 2*, the administrator of MEWA *B* must report the addition of State *Q* by filing the Form M–1 within 30 days of knowing that it is operating in State *Q*.

Example 3. (i) *Facts*. As of July 1, 2013, MEWA *C* is preparing to operate in States *Y* and *Z*. MEWA *C* is not licensed or authorized to operate as a health insurance issuer in any State and does not meet any of the other exceptions set forth in paragraph (c)(2) of this section.

(ii) *Conclusion*. In this *Example 3*, the administrator of MEWA *C* is required to register with the Secretary by filing a completed Form M–1 30 days prior to operating in States *Y* or *Z*. The administrator of MEWA *C* must also report by filing the Form M–1 annually by every March 1 thereafter.

Example 4. (i) *Facts*. As of July 28, 2013, MEWA *D* is operating in States *V* and *W*. MEWA *D* has satisfied the requirements of (e)(2) and, if applicable, (e)(3) with respect to those States. MEWA *D* is not licensed or authorized to operate as a health insurance issuer in any State and does not meet any of the other exceptions set forth in (c)(2) of this section. On August 5, 2013 MEWA *D* knowingly begins operating in State *X*.

(ii) *Conclusion*. In this *Example 4*, the administrator of MEWA *D* is required to make an additional registration filing with the Secretary by September 4, 2013 (within 30 days of knowingly operating in State *X*). Additionally, the administrator of MEWA *D* must continue to file the Form M–1 annually by every March 1 thereafter.

Example 5. (i) *Facts*. ECE *A* began offering coverage for medical care to the employees of two or more employers on January 1, 2007 and ECE *A* has not been involved in any mergers or experienced any other origination as described in paragraph (b)(9) of this section.

(ii) *Conclusion*. In this *Example 5*, ECE *A* was originated on January 1, 2007 and has not been originated since then. Therefore, the administrator of ECE *A* is not required to file a 2012 Form M–1 because the last time the ECE *A* was originated was January 1, 2007 which is more than three years prior. Further, the ECE has satisfied its reporting requirements by making three timely annual filings after its origination.

Example 6. (i) *Facts*. ECE *B* wants to begin offering coverage for medical care to the employees of two or more employers on July 1, 2013.

(ii) *Conclusion*. In this *Example 6*, the administrator of ECE *B* must file a completed Form M–1 on or before June 1, 2013 (which is 30 days prior to the origination date). In addition, the administrator of ECE *B* must file an updated copy of the Form M–1 by March 1, 2014 because the last date ECE *B* was originated was July 1, 2013 (which is less than three years prior to the March 1, 2014 due date). Furthermore, the administrator of ECE *B* must file the Form M–1 by March 1, 2015 and again by March 1, 2016 (because July 1, 2013 is less than three years prior to March 1, 2015 and March 1, 2016, respectively). However, if ECE *B* is not involved in any mergers and does not experience any other origination as described in paragraph (b)(9) of this section, there would not be a new origination date and no Form M–1 is required to be filed after March 1, 2016.

Example 7. (i) *Facts*. ECE *D*, which currently operates in State *A* and is still within the three-year window following its origination and the timely filing related thereto, is making preparations to operate in State *B* beginning on November 1, 2013.

(ii) *Conclusion*. In this *Example 7*, by operating in State *B*, ECE *D* experiences a special event within the three-year window following its origination and must make a filing by December 2, 2013.

Example 8. (i) *Facts*. Same facts as *Example 7*. ECE *D* satisfied its special filing requirement but is unsure about its annual filing requirements.

(ii) *Conclusion*. ECE *D* is exempt from the next annual filing due March 1, 2014 pursuant to the filing deadline exception under (f)(2)(ii) of this section. However, ECE *D* must continue making annual filings for the remainder of the three years following its origination.

Example 9. (i) *Facts*. MEWA *E* begins distributing marketing materials on August 31, 2013.

(ii) *Conclusion*. In this *Example 8*, because MEWA *E* began operating on August 31, 2013, the administrator of MEWA *E* must register with the Secretary by filing a completed Form M–1 on or before August 1, 2013 (30 days prior to operating in any State). In addition, the administrator of MEWA *E* must file the Form M–1 annually by every March 1 thereafter.

Example 10. (i) *Facts*. Same facts as *Example 9*, but MEWA *E* registers on or before August 1, 2013 by filing a Form M–1 indicating it will begin operating in every State. However, in the calendar year immediately following the filing, MEWA *E* only offered or provided benefits consisting of medical care to participants in State *Z*.

(ii) *Conclusion*. In this Example 10, the registration for all States (other than State Z) have lapsed under (e)(4) because MEWA *E* only offered or provided benefits consisting of medical care to participants in State *Z* in

the calendar year immediately following the filing. If subsequently, MEWA *E* begins offering or providing benefits consisting of medical care to participants in any additional State (or States), it must make a new registration filing pursuant to (e)(3) of this section.

(g) *Electronic filing*. A completed Form M–1 is filed with the Secretary by submitting it electronically as prescribed in the instructions to the Form M–1.

(h) *Penalties*—(1) *Civil penalties and procedures*. For information on civil penalties under section 502(c)(5) of ERISA for persons who fail to file the information required under this section, see § 2560.502c–5 of this chapter. For information relating to administrative hearings and appeals in connection with the assessment of civil penalties under section 502(c)(5) of ERISA, see §§ 2570.90 through 2570.101 of this chapter.

(2) *Criminal penalties and procedures*. For information on criminal penalties under section 519 of ERISA for persons who knowingly make false statements or false representation of fact with regards to the information required under this section, see section 501(b) of ERISA.

(3) *Cease and desist and summary seizure orders*. For information on the Secretary's authority to issue a cease and desist or summary seizure order under section 521 of ERISA, see § 2560.521.

[78 FR 13792, Mar. 1, 2013]

§ 2520.101–3 Notice of blackout periods under individual account plans.

(a) *In general*. In accordance with section 101(i) of the Act, the administrator of an individual account plan, within the meaning of paragraph (d)(2) of this section, shall provide notice of any blackout period, within the meaning of paragraph (d)(1) of this section, to all participants and beneficiaries whose rights under the plan will be temporarily suspended, limited, or restricted by the blackout period (the ''affected participants and beneficiaries'') and to issuers of employer securities subject to such blackout period in accordance with this section.

(b) *Notice to participants and beneficiaries*—(1) *Content*. The notice required by paragraph (a) of this section shall be written in a manner calculated to be understood by the average plan participant and shall include—

(i) The reasons for the blackout period;

(ii) A description of the rights otherwise available to participants and beneficiaries under the plan that will be temporarily suspended, limited or restricted by the blackout period (e.g., right to direct or diversify assets in individual accounts, right to obtain loans from the plan, right to obtain distributions from the plan), including identification of any investments subject to the blackout period;

(iii) The length of the blackout period by reference to:

(A) The expected beginning date and ending date of the blackout period; or

(B) The calendar week during which the blackout period is expected to begin and end, provided that during such weeks information as to whether the blackout period has begun or ended is readily available, without charge, to affected participants and beneficiaries, such as via a toll-free number or access to a specific web site, and the notice describes how to access the information;

(iv) In the case of investments affected, a statement that the participant or beneficiary should evaluate the appropriateness of their current investment decisions in light of their inability to direct or diversify assets in their accounts during the blackout period (a notice that includes the advisory statement contained in paragraph 4. of the model notice in paragraph (e)(2) of this section will satisfy this requirement);

(v) In any case in which the notice required by paragraph (a) of this section is not furnished at least 30 days in advance of the last date on which affected participants and beneficiaries could exercise affected rights immediately before the commencement of the blackout period, except for a notice furnished pursuant to paragraph (b)(2)(ii)(C) of this section:

(A) A statement that Federal law generally requires that notice be furnished to affected participants and beneficiaries at least 30 days in advance of the last date on which participants and beneficiaries could exercise the affected rights immediately before

the commencement of a blackout period (a notice that includes the statement contained in paragraph 5. of the model notice in paragraph (e)(2) of this section will satisfy this requirement), and

(B) An explanation of the reasons why at least 30 days advance notice could not be furnished; and

(vi) The name, address and telephone number of the plan administrator or other contact responsible for answering questions about the blackout period.

(2) *Timing.* (i) The notice described in paragraph (a) of this section shall be furnished to all affected participants and beneficiaries at least 30 days, but not more than 60 days, in advance of the last date on which such participants and beneficiaries could exercise the affected rights immediately before the commencement of any blackout period.

(ii) The requirement to give at least 30 days advance notice contained in paragraph (b)(2)(i) of this section shall not apply in any case in which—

(A) A deferral of the blackout period in order to comply with paragraph (b)(2)(i) of this section would result in a violation of the requirements of section 404(a)(1)(A) or (B) of the Act, and a fiduciary of the plan reasonably so determines in writing;

(B) The inability to provide the advance notice of a blackout period is due to events that were unforeseeable or circumstances beyond the reasonable control of the plan administrator, and a fiduciary of the plan reasonably so determines in writing; or

(C) The blackout period applies only to one or more participants or beneficiaries solely in connection with their becoming, or ceasing to be, participants or beneficiaries of the plan as a result of a merger, acquisition, divestiture, or similar transaction involving the plan or plan sponsor.

(iii) In any case in which paragraph (b)(2)(ii) of this section applies, the administrator shall furnish the notice described in paragraph (a) of this section to all affected participants and beneficiaries as soon as reasonably possible under the circumstances, unless such notice in advance of the termination of the blackout period is impracticable.

(iv) Determinations under paragraph (b)(2)(ii)(A) and (B) of this section must be dated and signed by the fiduciary.

(3) *Form and manner of furnishing notice.* The notice required by paragraph (a) of this section shall be in writing and furnished to affected participants and beneficiaries in any manner consistent with the requirements of § 2520.104b–1 of this chapter, including paragraph (c) of that section relating to the use of electronic media.

(4) *Changes in length of blackout period.* If, following the furnishing of a notice pursuant to this section, there is a change in the length of the blackout period (specified in such notice pursuant to paragraph (b)(1)(iii) of this section), the administrator shall furnish all affected participants and beneficiaries an updated notice explaining the reasons for the change and identifying all material changes in the information contained in the prior notice. Such notice shall be furnished to all affected participants and beneficiaries as soon as reasonably possible, unless such notice in advance of the termination of the blackout period is impracticable.

(c) *Notice to issuer of employer securities.* (1) The notice required by paragraph (a) of this section shall be furnished to the issuer of any employer securities held by the plan and subject to the blackout period. Such notice shall contain the information described in paragraph (b)(1)(i), (ii), (iii) and (vi) of this section and shall be furnished in accordance with the time frames prescribed in paragraph (b)(2) of this section. In the event of a change in the length of the blackout period specified in such notice, the plan administrator shall furnish an updated notice to the issuer in accordance with the requirements of paragraph (b)(4) of this section.

(2) For purposes of this section, notice to the agent for service of legal process for the issuer shall constitute notice to the issuer, unless the issuer has provided the plan administrator with the name of another person for service of notice, in which case the plan administrator shall furnish notice to such person. Such notice shall be in writing, except that the notice may be

in electronic or other form to the extent the person to whom notice must be furnished consents to receive the notice in such form.

(3) If the issuer designates the plan administrator as the person for service of notice pursuant to paragraph (c)(2) of this section, the issuer shall be deemed to have been furnished notice on the same date as notice is furnished to affected participants and beneficiaries pursuant to paragraph (b) of this section.

(d) *Definitions*. For purposes of this section—

(1) *Blackout period*—(i) *General*. The term ''blackout period'' means, in connection with an individual account plan, any period for which any ability of participants or beneficiaries under the plan, which is otherwise available under the terms of such plan, to direct or diversify assets credited to their accounts, to obtain loans from the plan, or to obtain distributions from the plan is temporarily suspended, limited, or restricted, if such suspension, limitation, or restriction is for any period of more than three consecutive business days.

(ii) *Exclusions*. The term ''blackout period'' does not include a suspension, limitation, or restriction—

(A) Which occurs by reason of the application of the securities laws (as defined in section 3(a)(47) of the Securities Exchange Act of 1934);

(B) Which is a regularly scheduled suspension, limitation, or restriction under the plan (or change thereto), provided that such suspension, limitation or restriction (or change) has been disclosed to affected plan participants and beneficiaries through the summary plan description, a summary of material modifications, materials describing specific investment alternatives under the plan and limits thereon or any changes thereto, participation or enrollment forms, or any other documents and instruments pursuant to which the plan is established or operated that have been furnished to such participants and beneficiaries;

(C) Which occurs by reason of a qualified domestic relations order or by reason of a pending determination (by the plan administrator, by a court of competent jurisdiction or otherwise) whether a domestic relations order filed (or reasonably anticipated to be filed) with the plan is a qualified order within the meaning of section 206(d)(3)(B)(i) of the Act; or

(D) Which occurs by reason of an act or a failure to act on the part of an individual participant or by reason of an action or claim by a party unrelated to the plan involving the account of an individual participant.

(2) *Individual account plan*. The term ''individual account plan'' shall have the meaning provided such term in section 3(34) of the Act, except that such term shall not include a ''one-participant retirement plan'' within the meaning of paragraph (d)(3) of this section.

(3) *One-participant retirement plan*. The term ''one-participant retirement plan'' means a one-participant retirement plan as defined in section 101(i)(8)(B) of the Act.

(4) *Issuer*. The term ''issuer'' means an issuer as defined in section 3 of the Securities Exchange Act of 1934 (15 U.S.C. 78c), the securities of which are registered under section 12 of the Securities Exchange Act of 1934, or that is required to file reports under section 15(d) of the Securities Exchange Act of 1934, or files or has filed a registration statement that has not yet become effective under the Securities Act of 1933 (15 U.S.C. 77a *et seq.*), and that it has not withdrawn.

(5) *Calendar week*. For purposes of paragraph (b)(1)(iii)(B), the term ''calendar week'' means a seven day period beginning on Sunday and ending on Saturday.

(e) *Model notice*—(1) *General*. The model notice set forth in paragraph (e)(2) of this section is intended to assist plan administrators in discharging their notice obligations under this section. Use of the model notice is not mandatory. However, a notice that uses the statements provided in paragraphs 4. and 5.(A) of the model notice will be deemed to satisfy the notice content requirements of paragraph (b)(1)(iv) and (b)(1)(v)(A), respectively, of this section. With regard to all other information required by paragraph (b)(1) of this section, compliance with the notice content requirements will depend on the facts and circumstances

pertaining to the particular blackout period and plan.

(2) *Form and content of model notice.*

Important Notice Concerning Your Rights

Under The [Enter Name of Individual Account Plan]

[Enter date of notice]

1. This notice is to inform you that the [enter name of plan] will be [enter reasons for blackout period, as appropriate: changing investment options, changing recordkeepers, etc.].

2. As a result of these changes, you temporarily will be unable to [enter as appropriate: direct or diversify investments in your individual accounts (if only specific investments are subject to the blackout, those investments should be specifically identified), obtain a loan from the plan, or obtain a distribution from the plan]. This period, during which you will be unable to exercise these rights otherwise available under the plan, is called a ''blackout period.'' Whether or not you are planning retirement in the near future, we encourage you to carefully consider how this blackout period may affect your retirement planning, as well as your overall financial plan.

3. The blackout period for the plan [enter the following as appropriate: is expected to begin on [enter date] and end [enter date]/is expected to begin during the week of [enter date] and end during the week of [enter date]. During these weeks, you can determine whether the blackout period has started or ended by [enter instructions for use toll-free number or accessing web site].

4. [*In the case of investments affected by the blackout period, add the following:* During blackout period you will be unable to direct or diversify the assets held in your plan account. For this reason, it is very important that you review and consider the appropriateness of your current investments in light of your inability to direct or diversify those investments during the blackout period. For your long-term retirement security, you should give careful consideration to the importance of a well-balanced and diversified investment portfolio, taking into account all your assets, income and investments.] [If the plan permits investments in individual securities, add the following: You should be aware that there is a risk to holding substantial portions of your assets in the securities of any one company, as individual securities tend to have wider price swings, up and down, in short periods of time, than investments in diversified funds. Stocks that have wide price swings might have a large loss during the blackout period, and you would not be able to direct the sale of such stocks from your account during the blackout period.]

5. [*If timely notice cannot be provided (see paragraph (b)(1)(v) of this section) enter:* (A) Federal law generally requires that you be furnished notice of a blackout period at least 30 days in advance of the last date on which you could exercise your affected rights immediately before the commencement of any blackout period in order to provide you with sufficient time to consider the effect of the blackout period on your retirement and financial plans. (B) [Enter explanation of reasons for inability to furnish 30 days advance notice.]]

6. If you have any questions concerning this notice, you should contact [enter name, address and telephone number of the plan administrator or other contact responsible for answering questions about the blackout period].

(f) *Effective date.* This section shall be effective and shall apply to any blackout period commencing on or after January 26, 2003. For the period January 26, 2003 to February 25, 2003, plan administrators shall furnish notice as soon as reasonably possible.

[68 FR 3727, Jan. 24, 2003]

§ 2520.101–4 Annual funding notice for multiemployer defined benefit pension plans.

(a) *In general.* (1) Except as provided in paragraph (a)(2) of this section, pursuant to section 101(f) of the Act, the administrator of a defined benefit, multiemployer pension plan shall furnish annually to each person specified in paragraph (f) of this section a funding notice that conforms to the requirements of this section.

(2) A plan administrator shall not be required to furnish a funding notice for any plan year for which the plan is receiving financial assistance from the Pension Benefit Guaranty Corporation pursuant to section 4261 of ERISA.

(b) *Content of notice.* A funding notice shall, consistent with the information included in the plan's Annual Return/Report Form 5500 filed for the plan year to which the funding notice relates, include the following information:

(1) The name of the plan;

(2) The address and phone number of the plan administrator and the plan's principal administrative officer (if different from the plan administrator);

(3) The plan sponsor's employer identification number;

(4) The plan number;

(5) A statement as to whether the plan's funded current liability percentage (as defined in section 302(d)(8)(B) of ERISA) for the plan year to which the notice relates is at least 100 percent (and, if not, the actual percentage);

(6) A statement of the market value of the plan's assets (and valuation date), the amount of benefit payments, and the ratio of the assets to the payments for the plan year to which the notice relates;

(7) A summary of the rules governing insolvent multiemployer plans, including the limitations on benefit payments and any potential benefit reductions and suspensions (and the potential effects of such limitations, reductions, and suspensions on the plan);

(8) A general description of the benefits under the plan which are eligible to be guaranteed by the Pension Benefit Guaranty Corporation, along with an explanation of the limitations on the guarantee and the circumstances under which such limitations apply; and

(9) Any additional information that the plan administrator elects to include, provided that such information:

(i) Is necessary or helpful to understanding the mandatory information in the notice, and

(ii) Is set forth following the information prescribed by paragraphs (b)(1) through (b)(8) of this section and shall be headed, ''Additional Explanation.''

(c) *Style and format of notice.* Funding notices shall be written in a manner that is consistent with the style and format requirements of 29 CFR 2520.102–2.

(d) *When to furnish notice.* A funding notice shall be furnished within 9 months after the close of the plan year, unless the Internal Revenue Service has granted an extension of time to file the annual report, in which case such furnishing shall take place within 2 months after the close of the extension period.

(e) *Manner of furnishing notice.* (1) Except as provided in paragraph (e)(2) of this section, funding notices shall be furnished in any manner consistent with the requirements of § 2520.104b–1 of this chapter, including paragraph (c) of that section relating to the use of electronic media.

(2) Notice shall be furnished to the Pension Benefit Guaranty Corporation in a manner consistent with the requirements of part 4000 of this title.

(f) *Persons entitled to notice.* Persons entitled to notice under this section include:

(1) Each participant covered under the plan on the last day of the plan year to which the notice relates;

(2) Each beneficiary receiving benefits under the plan on the last day of the plan year to which the notice relates;

(3) Each labor organization representing participants under the plan on the last day of the plan year to which the notice relates;

(4) Each employer that, as of the last day of the plan year to which the notice relates, is a party to the collective bargaining agreement(s) pursuant to which the plan is maintained or who otherwise may be subject to withdrawal liability pursuant to section 4203 of the Act; and

(5) The Pension Benefit Guaranty Corporation.

(g) *Model notice.* The appendix to this section contains a model notice that is intended to assist plan administrators in discharging their notice obligations under this section. Use of the model notice is not mandatory. However, use of the model notice will be deemed to satisfy the requirements of paragraphs (b) and (c), except with respect to information referenced in paragraph (b)(9) of this section.

APPENDIX TO § 2520.101-4

ANNUAL FUNDING NOTICE
For
[Insert name of pension plan]

Introduction

This notice, which federal law requires all multiemployer plans to send annually, includes important information about the funding level of [insert name, number, and EIN of plan] (Plan). This notice also includes information about rules governing insolvent plans and benefit payments guaranteed by the Pension Benefit Guaranty Corporation (PBGC), a federal agency. This notice is for the plan year beginning [insert beginning date] and ending [insert ending date] (Plan Year).

Plan's Funding Level

The Plan's "funded current liability percentage" for the Plan Year was [insert percentage—see instructions below]. In general, the higher the percentage, the better funded the plan. The funded current liability percentage, however, is not indicative of how well a plan will be funded in the future or if it terminates. Whether this percentage will increase or decrease over time depends on a number of factors, including how the plan's investments perform, what assumptions the plan makes about rates of return, whether employer contributions to the fund increase or decline, and whether benefits payments from the fund increase or decline.

(Instructions: For purposes of computing the "funded current liability percentage," insert ratio of actuarial value of assets to current liability, as of the valuation date, expressed as a percentage. If the percentage is equal to or greater than 100 percent, you may insert "at least 100 percent.")

Plan's Financial Information

The market value of the Plan's assets as of [insert valuation date] was [insert amount]. The total amount of benefit payments for the Plan Year was [enter amount]. The ratio of assets to benefit payments is [enter amount calculated by dividing the value of plan assets by the total benefit payments]. This ratio suggests that the Plan's assets could provide for approximately [enter amount calculated above] years of benefit payments in annual amounts equal to what was paid out in the Plan Year. However, the ratio does not take into account future changes in total benefit payments or plan assets.

Rules Governing Insolvent Plans

Federal law has a number of special rules that apply to financially troubled multiemployer plans. Under so-called "plan reorganization rules," a plan with adverse financial experience may need to increase required contributions and may, under certain circumstances, reduce benefits that are not eligible for the PBGC's guarantee (generally, benefits that have been in effect for less than 60 months). If a plan is in reorganization status, it must provide notification that the plan is in reorganization status and that, if contributions are not increased, accrued benefits under the plan may be reduced or an excise tax may be imposed (or both). The law requires the plan to furnish this notification to each contributing employer and the labor organization.

Despite the special plan reorganization rules, a plan in reorganization nevertheless could become insolvent. A plan is insolvent for a plan year if its available financial resources are not sufficient to pay benefits when due for the plan year. An insolvent plan must reduce benefit payments to the highest level that can be paid from the plan's available financial resources. If such resources are not enough to pay benefits at a level specified by law (see Benefit Payments Guaranteed by the PBGC, below), the plan must apply to the PBGC for financial assistance. The PBGC, by law, will loan the plan the amount necessary to pay benefits at the guaranteed level. Reduced benefits may be restored if the plan's financial condition improves.

A plan that becomes insolvent must provide prompt notification of the insolvency to participants and beneficiaries, contributing employers, labor unions representing participants, and PBGC. In addition, participants and beneficiaries also must receive information regarding whether, and how, their benefits will be reduced or affected as a result of the insolvency, including loss of a lump sum option. This information will be provided for each year the plan is insolvent.

Benefit Payments Guaranteed by the PBGC

The maximum benefit that the PBGC guarantees is set by law. Only vested benefits are guaranteed. Specifically, the PBGC guarantees a monthly benefit payment equal to 100 percent of the first $11 of the Plan's monthly benefit accrual rate, plus 75 percent of the next $33 of the accrual rate, times each year of credited service. The PBGC's maximum guarantee, therefore, is $35.75 per month times a participant's years of credited service.

Example 1: If a participant with 10 years of credited service has an accrued monthly benefit of $500, the accrual rate for purposes of determining the PBGC guarantee would be determined by dividing the monthly benefit by the

participant's years of service ($500/10), which equals $50. The guaranteed amount for a $50 monthly accrual rate is equal to the sum of $11 plus $24.75 (.75 x $33), or $35.75. Thus, the participant's guaranteed monthly benefit is $357.50 ($35.75 x 10).

Example 2: If the participant in Example 1 has an accrued monthly benefit of $200, the accrual rate for purposes of determining the guarantee would be $20 (or $200/10). The guaranteed amount for a $20 monthly accrual rate is equal to the sum of $11 plus $6.75 (.75 x $9), or $17.75. Thus, the participant's guaranteed monthly benefit would be $177.50 ($17.75 x 10).

In calculating a person's monthly payment, the PBGC will disregard any benefit increases that were made under the plan within 60 months before the earlier of the plan's termination or insolvency. Similarly, the PBGC does not guarantee pre-retirement death benefits to a spouse or beneficiary (e.g., a qualified pre-retirement survivor annuity) if the participant dies after the plan terminates, benefits above the normal retirement benefit, disability benefits not in pay status, or non-pension benefits, such as health insurance, life insurance, death benefits, vacation pay, or severance pay.

Where to Get More Information

For more information about this notice, you may contact [enter name of plan administrator and, if applicable, principal administrative officer], at [enter phone number and address]. For more information about the PBGC and multiemployer benefit guarantees, go to PBGC's website, www.pbgc.gov, or call PBGC toll-free at 1-800-400-7242 (TTY/TDD users may call the Federal relay service toll free at 1-800-877-8339 and ask to be connected to 1-800-400-7242).

[71 FR 1911, Jan. 11, 2006]

§ 2520.101–5 [Reserved]

§ 2520.101–6 Multiemployer pension plan information made available on request.

(a) *In general.* For purposes of compliance with the requirements of section 101(k) of the Employee Retirement Income Security Act of 1974, as amended (the Act), 29 U.S.C. 1001, *et seq.*, the administrator of a multiemployer pension plan shall, in accordance with the requirements of this section, furnish copies of reports and applications described in paragraph (c) of this section to plan participants, beneficiaries, employee representatives and contributing employers, described in paragraph (e) of this section.

(b) *Obligation to furnish.* (1) Except as provided in paragraph (d) of this section, the administrator of a multiemployer pension plan shall, not later than 30 days after receipt of a written request for a report(s) or application(s) described in paragraph (c) of this section from a plan participant, beneficiary, employee representative or contributing employer described in paragraph (e) of this section, furnish the requested document or documents to the requester.

(2) The plan administrator shall furnish reports and applications pursuant to paragraph (b)(1) of this section in a manner consistent with the requirements of 29 CFR 2520.104b–1, including paragraph (c) of that section relating to the use of electronic media.

(3) The plan administrator may impose a reasonable charge to cover the costs of furnishing documents pursuant to this section, but in no event may such charge exceed—

(i) The lesser of: (A) The actual cost to the plan for the least expensive means of acceptable reproduction of the document(s) or (B) 25 cents per page; plus

(ii) The cost of mailing or delivery of the document.

(c) *Documents to be furnished.* For purposes of paragraph (a) of this section, and subject to paragraph (d) of this section, a plan participant, beneficiary, employee representative or contributing employer described in paragraph (e) of this section, shall be entitled to request and receive a copy of any:

(1) Periodic actuarial report. For this purpose the term ''periodic actuarial report'' means any—

(i) Actuarial report prepared by an actuary of the plan and received by the plan at regularly scheduled, recurring intervals; and

(ii) Study, test (including a sensitivity test), document, analysis or other information (whether or not called a ''report'') received by the plan from an actuary of the plan that depicts alternative funding scenarios based on a range of alternative actuarial assumptions, whether or not such information is received by the plan at regularly scheduled, recurring intervals.

(2) Quarterly, semi-annual, or annual financial report prepared for the plan by any plan investment manager or advisor (without regard to whether such advisor is a fiduciary within the meaning of section 3(21) of the Act) or other fiduciary; and

(3) Application filed with the Secretary of the Treasury requesting an extension under section 304 of the Act or section 431(d) of the Internal Revenue Code of 1986 and the determination of such Secretary pursuant to such application.

(d) *Limitations and exceptions.* For purposes of this section, reports and applications (and related determinations) required to be disclosed under this section shall not include:

(1) Any report or application that was furnished to the requester within the 12-month period immediately preceding the date on which the request is received by the plan;

(2) Any report or application that, as of the date on which the request is received by the plan, has been in the plan's possession for 6 years or more;

(3) Any report described in paragraph (c)(1) and (c)(2) of this section that, as of the date on which the request is received by the plan, has not been in the plan's possession for at least 30 days; except that, if the plan administrator elects not to furnish any such document, the administrator shall furnish a notice, not later than 30 days after the date on which request is received by the plan, informing the requester of the existence of the document and the earliest date on which the document can be furnished by the plan.

(4) Any information or data which served as the basis for any report or application described in paragraph (c) of this section, although nothing herein shall limit any other right that a person may have to review or obtain such information under the Act; or

(5)(i) Any information within a report or application that the plan administrator reasonably determines to be either:

(A) individually identifiable information with respect to any plan participant, beneficiary, employee, fiduciary, or contributing employer, except that such limitation shall not apply to an investment manager, adviser, or other person (other than an employee of the plan) preparing a financial report described in paragraph (c)(2) of this section; or

(B) proprietary information regarding the plan, any contributing employer, or entity providing services to the plan.

(ii) For purposes of paragraph (d)(5)(i)(B) of this section, the term ''proprietary information'' means trade secrets and other non-public information (e.g., processes, procedures, formulas, methodologies, techniques, strategies) that, if disclosed by the plan, may cause, or increase a reasonable risk of, financial harm to the plan, a contributing employer, or entity providing services to the plan.

(iii) The plan administrator may treat information relating to a contributing employer or entity providing services to the plan as other than proprietary if the contributing employer or service provider has not identified such information as proprietary.

(iv) A plan administrator shall inform the requester if the plan administrator withholds any information described in paragraph (d)(5)(i) of this section from a report or application requested under paragraph (b) of this section.

(e) *Persons entitled to request documents.* For purposes of this section, a plan participant, beneficiary, employee representative or contributing employer entitled to request and receive reports and applications includes:

(1) Any participant within the meaning of section 3(7) of the Act;

(2) Any beneficiary receiving benefits under the plan;

(3) Any labor organization representing participants under the plan;

(4) Any employer that is a party to the collective bargaining agreement(s) pursuant to which the plan is maintained or who otherwise may be subject to withdrawal liability pursuant to section 4203 of the Act.

[75 FR 9341, Mar. 2, 2010]

Subpart B—Contents of Plan Descriptions and Summary Plan Descriptions

§ 2520.102–1 [Reserved]

§ 2520.102–2 Style and format of summary plan description.

(a) *Method of presentation.* The summary plan description shall be written in a manner calculated to be understood by the average plan participant and shall be sufficiently comprehensive to apprise the plan's participants and beneficiaries of their rights and obligations under the plan. In fulfilling these requirements, the plan administrator shall exercise considered judgment and discretion by taking into account such factors as the level of comprehension and education of typical participants in the plan and the complexity of the terms of the plan. Consideration of these factors will usually require the limitation or elimination of technical jargon and of long, complex sentences, the use of clarifying examples and illustrations, the use of clear cross references and a table of contents.

(b) *General format.* The format of the summary plan description must not have the effect to misleading, misinforming or failing to inform participants and beneficiaries. Any description of exception, limitations, reductions, and other restrictions of plan benefits shall not be minimized, rendered obscure or otherwise made to appear unimportant. Such exceptions, limitations, reductions, or restrictions of plan benefits shall be described or summarized in a manner not less prominent than the style, captions, printing type, and prominence used to describe or summarize plan benefits. The advantages and disadvantages of the plan shall be presented without either exaggerating the benefits or minimizing the limitations. The description or summary of restrictive plan provisions need not be disclosed in the summary plan description in close conjunction with the description or summary of benefits, provided that adjacent to the benefit description the page on which the restrictions are described is noted.

(c) *Foreign languages.* In the case of either—

(1) A plan that covers fewer than 100 participants at the beginning of a plan year, and in which 25 percent or more of all plan participants are literate only in the same non-English language, or

(2) A plan which covers 100 or more participants at the beginning of the plan year, and in which the lesser of (i) 500 or more participants, or (ii) 10% or more of all plan participants are literate only in the same non-English language, so that a summary plan description in English would fail to inform these participants adequately of their rights and obligations under the plan, the plan administrator for such plan shall provide these participants with an English-language summary plan description which prominently displays a notice, in the non-English language common to these participants, offering them assistance. The assistance provided need not involve written materials, but shall be given in the non-

English language common to these participants and shall be calculated to provide them with a reasonable opportunity to become informed as to their rights and obligations under the plan. The notice offering assistance contained in the summary plan description shall clearly set forth in the non-English language common to such participants offering them assistance. The assistance provided need not involve written materials, but shall be given in the non-English language common to these participants and shall be calculated to provide them with a reasonable opportunity to become informed as to their rights and obligations under the plan. The notice offering assistance contained in the summary plan description shall clearly set forth in the non-English language common to such participants the procedures they must follow in order to obtain such assistance.

Example. Employer A maintains a pension plan which covers 1000 participants. At the beginning of a plan year five hundred of Employer A's covered employees are literate only in Spanish, 101 are literate only in Vietnamese, and the remaining 399 are literate in English. Each of the 1000 employees receives a summary plan description in English, containing an assistance notice in both Spanish and Vietnamese stating the following:

''This booklet contains a summary in English of your plan rights and benefits under Employer A Pension Plan. If you have difficulty understanding any part of this booklet, contact Mr. John Doe, the plan administrator, at his office in Room 123, 456 Main St., Anywhere City, State 20001. Office hours are from 8:30 A.M. to 5:00 P.M. Monday through Friday. You may also call the plan administrator's office at (202) 555–2345 for assistance.''

[42 FR 37180, July 19, 1977]

§ 2520.102–3 Contents of summary plan description.

Section 102 of the Act specifies information that must be included in the summary plan description. The summary plan description must accurately reflect the contents of the plans as of the date not earlier than 120 days prior to the date such summary plan description is disclosed. The following information shall be included in the summary plan description of both employee welfare benefit plans and employee pension benefit plans, except as stated otherwise in paragraphs (j) through (n):

(a) The name of the plan, and, if different, the name by which the plan is commonly known by its participants and beneficiaries;

(b) The name and address of—

(1) In the case of a single employer plan, the employer whose employees are covered by the plan,

(2) In the case of a plan maintained by an employee organization for its members, the employee organization that maintains the plan,

(3) In the case of a collectively-bargained plan established or maintained by one or more employers and one or more employee organizations, the association, committee, joint board of trustees, parent or most significantly employer of a group of employers all of which contribute to the same plan, or other similar representative of the parties who established or maintain the plan, as well as

(i) A statement that a complete list of the employers and employee organizations sponsoring the plan may be obtained by participants and beneficiaries upon written request to the plan administrator, and is available for examination by participants and beneficiaries, as required by §§ 2520.104b–1 and 2520.104b–30; or

(ii) A statement that participants and beneficiaries may receive from the plan administrator, upon written request, information as to whether a particular employer or employee organization is a sponsor of the plan and, if the employer or employee organization is a plan sponsor, the sponsor's address.

(4) In the case of a plan established or maintained by two or more employers, the association, committee, joint board of trustees, parent or most significant employer of a group of employers all of which contribute to the same plan, or other similar representative of the parties who established or maintain the plan, as well as

(i) A statement that a complete list of the employers sponsoring the plan may be obtained by participants and beneficiaries upon written request to the plan administrator, and is available for examination by participants and beneficiaries, as required by §§ 2520.104b–1 and 2520.104b–30, or,

(ii) A statement that participants and beneficiaries may receive from the plan administrator, upon written request, information as to whether a particular employer is a sponsor of the plan and, if the employer is a plan sponsor, the sponsor's address.

(c) The employer identification number (EIN) assigned by the Internal Revenue Service to the plan sponsor and the plan number assigned by the plan sponsor. (For further detailed explanation, see the instructions to the plan description Form EBS–1 and ''Identification Numbers Under ERISA'' (Publ. 1004), published jointly by DOL, IRS, and PBGC);

(d) The type of pension or welfare plan, e.g. pension plans—defined benefit, defined contribution, 401(k), cash balance, money purchase, profit sharing, ERISA section 404(c) plan, etc., and for welfare plans—group health plans, disability, pre-paid legal services, etc.

(e) The type of administration of the plan, e.g., contract administration, insurer administration, etc.;

(f) The name, business address and business telephone number of the plan administrator as that term is defined by section 3(16) of the Act;

(g) The name of the person designated as agent for service of legal process, and the address at which process may be served on such person, and in addition, a statement that service of legal process may be made upon a plan trustee or the plan administrator;

(h) The name, title and address of the principal place of business of each trustee of the plan;

(i) If a plan is maintained pursuant to one or more collective bargaining agreements, a statement that the plan is so maintained, and that a copy of any such agreement may be obtained by participants and beneficiaries upon written request to the plan administrator, and is available for examination by participants and beneficiaries, as required by §§ 2520.104b–1 and 2520.104b–30. For the purpose of this paragraph, a plan is maintained pursuant to a collective bargaining agreement if such agreement controls any duties, rights or benefits under the plan, even though such agreement has been superseded in part for other purposes;

(j) The plan's requirements respecting eligibility for participation and for benefits. The summary plan description shall describe the plan's provisions relating to eligibility to participate in the plan and the information identified in paragraphs (j)(1), (2) and (3) of this section, as appropriate.

(1) For employee pension benefit plans, it shall also include a statement describing the plan's normal retirement age, as that term is defined in section 3(24) of the Act, and a statement describing any other conditions which must be met before a participant will be eligible to receive benefits. Such plan benefits shall be described or summarized. In addition, the summary plan description shall include a description of the procedures governing qualified domestic relations order (QDRO) determinations or a statement indicating that participants and beneficiaries can obtain, without charge, a copy of such procedures from the plan administrator.

(2) For employee welfare benefit plans, it shall also include a statement of the conditions pertaining to eligibility to receive benefits, and a description or summary of the benefits. In the case of a welfare plan providing extensive schedules of benefits (a group health plan, for example), only a general description of such benefits is required if reference is made to detailed schedules of benefits which are available without cost to any participant or beneficiary who so requests. In addition, the summary plan description shall include a description of the procedures governing qualified medical child support order (QMCSO) determinations or a statement indicating that participants and beneficiaries can obtain, without charge, a copy of such procedures from the plan administrator.

(3) For employee welfare benefit plans that are group health plans, as defined in section 733(a)(1) of the Act, the summary plan description shall include a description of: any cost-sharing provisions, including premiums, deductibles, coinsurance, and copayment amounts for which the participant or beneficiary will be responsible; any annual or lifetime caps or other limits on benefits under the plan; the extent to which preventive services are

covered under the plan; whether, and under what circumstances, existing and new drugs are covered under the plan; whether, and under what circumstances, coverage is provided for medical tests, devices and procedures; provisions governing the use of network providers, the composition of the provider network, and whether, and under what circumstances, coverage is provided for out-of-network services; any conditions or limits on the selection of primary care providers or providers of speciality medical care; any conditions or limits applicable to obtaining emergency medical care; and any provisions requiring preauthorizations or utilization review as a condition to obtaining a benefit or service under the plan. In the case of plans with provider networks, the listing of providers may be furnished as a separate document that accompanies the plan's SPD, provided that the summary plan description contains a general description of the provider network and provided further that the SPD contains a statement that provider lists are furnished automatically, without charge, as a separate document.

(k) In the case of an employee pension benefit plan, a statement describing any joint and survivor benefits provided under the plan, including any requirement that an election be made as a condition to select or reject the joint and survivor annuity;

(l) For both pension and welfare benefit plans, a statement clearly identifying circumstances which may result in disqualification, ineligibility, or denial, loss, forfeiture, suspension, offset, reduction, or recovery (e.g., by exercise of subrogation or reimbursement rights) of any benefits that a participant or beneficiary might otherwise reasonably expect the plan to provide on the basis of the description of benefits required by paragraphs (j) and (k) of this section. In addition to other required information, plans must include a summary of any plan provisions governing the authority of the plan sponsors or others to terminate the plan or amend or eliminate benefits under the plan and the circumstances, if any, under which the plan may be terminated or benefits may be amended or eliminated; a summary of any plan provisions governing the benefits, rights and obligations of participants and beneficiaries under the plan on termination of the plan or amendment or elimination of benefits under the plan, including, in the case of an employee pension benefit plan, a summary of any provisions relating to the accrual and the vesting of pension benefits under the plan upon termination; and a summary of any plan provisions governing the allocation and disposition of assets of the plan upon termination. Plans also shall include a summary of any provisions that may result in the imposition of a fee or charge on a participant or beneficiary, or on an individual account thereof, the payment of which is a condition to the receipt of benefits under the plan. The foregoing summaries shall be disclosed in accordance with the requirements under 29 CFR 2520.102–2(b).

(m) For an employee pension benefit plan the following information:

(1) If the benefits of the plan are not insured under title IV of the Act, a statement of this fact, and reason for the lack of insurance; and

(2) If the benefits of the plan are insured under title IV of the Act, a statement of this fact, a summary of the pension benefit guaranty provisions of title IV, and a statement indicating that further information on the provisions of title IV can be obtained from the plan administrator or the Pension Benefit Guaranty Corporation. The address of the PBGC shall be provided.

(3) A summary plan description for a single-employer plan will be deemed to comply with paragraph (m)(2) of this section if it includes the following statement:

> Your pension benefits under this plan are insured by the Pension Benefit Guaranty Corporation (PBGC), a federal insurance agency. If the plan terminates (ends) without enough money to pay all benefits, the PBGC will step in to pay pension benefits. Most people receive all of the pension benefits they would have received under their plan, but some people may lose certain benefits.
>
> The PBGC guarantee generally covers: (1) Normal and early retirement benefits; (2) disability benefits if you become disabled before the plan terminates; and (3) certain benefits for your survivors.

The PBGC guarantee generally does not cover: (1) Benefits greater than the maximum guaranteed amount set by law for the year in which the plan terminates; (2) some or all of benefit increases and new benefits based on plan provisions that have been in place for fewer than 5 years at the time the plan terminates; (3) benefits that are not vested because you have not worked long enough for the company; (4) benefits for which you have not met all of the requirements at the time the plan terminates; (5) certain early retirement payments (such as supplemental benefits that stop when you become eligible for Social Security) that result in an early retirement monthly benefit greater than your monthly benefit at the plan's normal retirement age; and (6) non-pension benefits, such as health insurance, life insurance, certain death benefits, vacation pay, and severance pay.

Even if certain of your benefits are not guaranteed, you still may receive some of those benefits from the PBGC depending on how much money your plan has and on how much the PBGC collects from employers.

For more information about the PBGC and the benefits it guarantees, ask your plan administrator or contact the PBGC's Technical Assistance Division, 1200 K Street N.W., Suite 930, Washington, D.C. 20005–4026 or call 202–326–4000 (not a toll-free number). TTY/TDD users may call the federal relay service toll-free at 1–800–877–8339 and ask to be connected to 202–326–4000. Additional information about the PBGC's pension insurance program is available through the PBGC's website on the Internet at *http://www.pbgc.gov*.

(4) A summary plan description for a multiemployer plan will be deemed to comply with paragraph (m)(2) of this section if it includes the following statement:

Your pension benefits under this multiemployer plan are insured by the Pension Benefit Guaranty Corporation (PBGC), a federal insurance agency. A multiemployer plan is a collectively bargained pension arrangement involving two or more unrelated employers, usually in a common industry.

Under the multiemployer plan program, the PBGC provides financial assistance through loans to plans that are insolvent. A multiemployer plan is considered insolvent if the plan is unable to pay benefits (at least equal to the PBGC's guaranteed benefit limit) when due.

The maximum benefit that the PBGC guarantees is set by law. Under the multiemployer program, the PBGC guarantee equals a participant's years of service multiplied by (1) 100% of the first $5 of the monthly benefit accrual rate and (2) 75% of the next $15. The PBGC's maximum guarantee limit is $16.25 per month times a participant's years of service. For example, the maximum annual guarantee for a retiree with 30 years of service would be $5,850.

The PBGC guarantee generally covers: (1) Normal and early retirement benefits; (2) disability benefits if you become disabled before the plan becomes insolvent; and (3) certain benefits for your survivors.

The PBGC guarantee generally does not cover: (1) Benefits greater than the maximum guaranteed amount set by law; (2) benefit increases and new benefits based on plan provisions that have been in place for fewer than 5 years at the earlier of: (i) The date the plan terminates or (ii) the time the plan becomes insolvent; (3) benefits that are not vested because you have not worked long enough; (4) benefits for which you have not met all of the requirements at the time the plan becomes insolvent; and (5) non-pension benefits, such as health insurance, life insurance, certain death benefits, vacation pay, and severance pay.

For more information about the PBGC and the benefits it guarantees, ask your plan administrator or contact the PBGC's Technical Assistance Division, 1200 K Street, N.W., Suite 930, Washington, D.C. 20005–4026 or call 202–326–4000 (not a toll-free number). TTY/TDD users may call the federal relay service toll-free at 1–800–877–8339 and ask to be connected to 202–326–4000. Additional information about the PBGC's pension insurance program is available through the PBGC's website on the Internet at *http://www.pbgc.gov*.

(n) In the case of an employee pension benefit plan, a description and explanation of the plan provisions for determining years of service for eligibility to participate, vesting, and breaks in service, and years of participation for benefit accrual. The description shall state the service required to accrue full benefits and the manner in which accrual of benefits is prorated for employees failing to complete full service for a year.

(o) In the case of a group health plan, within the meaning of section 607(1) of the Act, subject to the continuation coverage provisions of Part 6 of Title I of ERISA, a description of the rights and obligations of participants and beneficiaries with respect to continuation coverage, including, among other things, information concerning qualifying events and qualified beneficiaries, premiums, notice and election requirements and procedures, and duration of coverage.

(p) The sources of contributions to the plan—for example, employer, employee organization, employees—and the method by which the amount of contribution is calculated. Defined benefit pension plans may state without further explanation that the contribution is actuarially determined.

(q) The identity of any funding medium used for the accumulation of assets through which benefits are provided. The summary plan description shall identify any insurance company, trust fund, or any other institution, organization, or entity which maintains a fund on behalf of the plan or through which the plan is funded or benefits are provided. If a health insurance issuer, within the meaning of section 733(b)(2) of the Act, is responsible, in whole or in part, for the financing or administration of a group health plan, the summary plan description shall indicate the name and address of the issuer, whether and to what extent benefits under the plan are guaranteed under a contract or policy of insurance issued by the issuer, and the nature of any administrative services (e.g., payment of claims) provided by the issuer.

(r) The date of the end of the year for purposes of maintaining the plan's fiscal records;

(s) The procedures governing claims for benefits (including procedures for obtaining preauthorizations, approvals, or utilization review decisions in the case of group health plan services or benefits, and procedures for filing claim forms, providing notifications of benefit determinations, and reviewing denied claims in the case of any plan), applicable time limits, and remedies available under the plan for the redress of claims which are denied in whole or in part (including procedures required under section 503 of Title I of the Act). The plan's claims procedures may be furnished as a separate document that accompanies the plan's SPD, provided that the document satisfies the style and format requirements of 29 CFR 2520.102–2 and, provided further that the SPD contains a statement that the plan's claims procedures are furnished automatically, without charge, as a separate document.

(t)(1) The statement of ERISA rights described in section 104(c) of the Act, containing the items of information applicable to the plan included in the model statement of paragraph (t)(2) of this section. Items which are not applicable to the plan are not required to be included. The statement may contain explanatory and descriptive provisions in addition to those prescribed in paragraph (t)(2) of this section. However, the style and format of the statement shall not have the effect of misleading, misinforming or failing to inform participants and beneficiaries of a plan. All such information shall be written in a manner calculated to be understood by the average plan participant, taking into account factors such as the level of comprehension and education of typical participants in the plan and the complexity of the items required under this subparagraph to be included in the statement. Inaccurate, incomprehensible or misleading explanatory material will fail to meet the requirements of this section. The statement of ERISA rights (the model statement or a statement prepared by the plan), must appear as one consolidated statement. If a plan finds it desirable to make additional mention of certain rights elsewhere in the summary plan description, it may do so. The summary plan description may state that the statement of ERISA rights is required by Federal law and regulation.

(2) A summary plan description will be deemed to comply with the requirements of paragraph (t)(1) of this section if it includes the following statement; items of information which are not applicable to a particular plan should be deleted:

As a participant in (name of plan) you are entitled to certain rights and protections under the Employee Retirement Income Security Act of 1974 (ERISA). ERISA provides that all plan participants shall be entitled to:

RECEIVE INFORMATION ABOUT YOUR PLAN AND BENEFITS

Examine, without charge, at the plan administrator's office and at other specified locations, such as worksites and union halls, all documents governing the plan, including insurance contracts and collective bargaining agreements, and a copy of the latest annual report (Form 5500 Series) filed by the plan with the U.S. Department of Labor and available at the Public Disclosure Room of

the Pension and Welfare Benefit Administration.

Obtain, upon written request to the plan administrator, copies of documents governing the operation of the plan, including insurance contracts and collective bargaining agreements, and copies of the latest annual report (Form 5500 Series) and updated summary plan description. The administrator may make a reasonable charge for the copies.

Receive a summary of the plan's annual financial report. The plan administrator is required by law to furnish each participant with a copy of this summary annual report.

Obtain a statement telling you whether you have a right to receive a pension at normal retirement age (age * * *) and if so, what your benefits would be at normal retirement age if you stop working under the plan now. If you do not have a right to a pension, the statement will tell you how many more years you have to work to get a right to a pension. This statement must be requested in writing and is not required to be given more than once every twelve (12) months. The plan must provide the statement free of charge.

CONTINUE GROUP HEALTH PLAN COVERAGE

Continue health care coverage for yourself, spouse or dependents if there is a loss of coverage under the plan as a result of a qualifying event. You or your dependents may have to pay for such coverage. Review this summary plan description and the documents governing the plan on the rules governing your COBRA continuation coverage rights.

Reduction or elimination of exclusionary periods of coverage for preexisting conditions under your group health plan, if you have creditable coverage from another plan. You should be provided a certificate of creditable coverage, free of charge, from your group health plan or health insurance issuer when you lose coverage under the plan, when you become entitled to elect COBRA continuation coverage, when your COBRA continuation coverage ceases, if you request it before losing coverage, or if you request it up to 24 months after losing coverage. Without evidence of creditable coverage, you may be subject to a preexisting condition exclusion for 12 months (18 months for late enrollees) after your enrollment date in your coverage.

PRUDENT ACTIONS BY PLAN FIDUCIARIES

In addition to creating rights for plan participants ERISA imposes duties upon the people who are responsible for the operation of the employee benefit plan. The people who operate your plan, called ''fiduciaries'' of the plan, have a duty to do so prudently and in the interest of you and other plan participants and beneficiaries. No one, including your employer, your union, or any other person, may fire you or otherwise discriminate against you in any way to prevent you from obtaining a (pension, welfare) benefit or exercising your rights under ERISA.

ENFORCE YOUR RIGHTS

If your claim for a (pension, welfare) benefit is denied or ignored, in whole or in part, you have a right to know why this was done, to obtain copies of documents relating to the decision without charge, and to appeal any denial, all within certain time schedules.

Under ERISA, there are steps you can take to enforce the above rights. For instance, if you request a copy of plan documents or the latest annual report from the plan and do not receive them within 30 days, you may file suit in a Federal court. In such a case, the court may require the plan administrator to provide the materials and pay you up to $110 a day until you receive the materials, unless the materials were not sent because of reasons beyond the control of the administrator. If you have a claim for benefits which is denied or ignored, in whole or in part, you may file suit in a state or Federal court. In addition, if you disagree with the plan's decision or lack thereof concerning the qualified status of a domestic relations order or a medical child support order, you may file suit in Federal court. If it should happen that plan fiduciaries misuse the plan's money, or if you are discriminated against for asserting your rights, you may seek assistance from the U.S. Department of Labor, or you may file suit in a Federal court. The court will decide who should pay court costs and legal fees. If you are successful the court may order the person you have sued to pay these costs and fees. If you lose, the court may order you to pay these costs and fees, for example, if it finds your claim is frivolous.

ASSISTANCE WITH YOUR QUESTIONS

If you have any questions about your plan, you should contact the plan administrator. If you have any questions about this statement or about your rights under ERISA, or if you need assistance in obtaining documents from the plan administrator, you should contact the nearest office of the Employee Benefits Security Administration, U.S. Department of Labor, listed in your telephone directory or the Division of Technical Assistance and Inquiries, Employee Benefits Security Administration, U.S. Department of Labor, 200 Constitution Avenue N.W., Washington, D.C. 20210. You may also obtain certain publications about your rights and responsibilities under ERISA by calling the publications hotline of the Employee Benefits Security Administration.

(u)(1) For a group health plan, as defined in section 733(a)(1) of the Act, that provides maternity or newborn infant coverage, a statement describing any requirements under federal or state law applicable to the plan, and any health insurance coverage offered under the plan, relating to hospital length of stay in connection with childbirth for the mother or newborn child. If federal law applies in some areas in which the plan operates and state law applies in other areas, the statement should describe the different areas and the federal or state law requirements applicable in each.

(2) In the case of a group health plan subject to section 711 of the Act, the summary plan description will be deemed to have complied with paragraph (u)(1) of this section relating to the required description of federal law requirements if it includes the following statement in the summary plan description:

Group health plans and health insurance issuers generally may not, under Federal law, restrict benefits for any hospital length of stay in connection with childbirth for the mother or newborn child to less than 48 hours following a vaginal delivery, or less than 96 hours following a cesarean section. However, Federal law generally does not prohibit the mother's or newborn's attending provider, after consulting with the mother, from discharging the mother or her newborn earlier than 48 hours (or 96 hours as applicable). In any case, plans and issuers may not, under Federal law, require that a provider obtain authorization from the plan or the insurance issuer for prescribing a length of stay not in excess of 48 hours (or 96 hours).

(Approved by the Office of Management and Budget under control number 1210–0039)

[42 FR 37180, July 19, 1977, as amended at 62 FR 16984, Apr. 8, 1997; 62 FR 31695, June 10, 1997; 62 FR 36205, July 7, 1997; 63 FR 48375, Sept. 9, 1998; 65 FR 70241, Nov. 21, 2000; 66 FR 34994, July 2, 2001; 66 FR 36368, July 11, 2001]

§ 2520.102–4 Option for different summary plan descriptions.

In some cases an employee benefit plan may provide different benefits for various classes of participants and beneficiaries. For example, a plan amendment altering benefits may apply to only those participants who are employees of an employer when the amendment is adopted and to employees who later become participants, but not to participants who no longer are employees when the amendment is adopted. (See § 2520.104b–4). Similarly, a plan may provide for different benefits for participants employed at different plants of the employer, or for different classes of participants in the same plant. In such cases the plan administrator may fulfill the requirement to furnish a summary plan description to participants covered under the plan and beneficiaries receiving benefits under the plan by furnishing to each member of each class of participants and beneficiaries a copy of a summary plan description appropriate to that class. Each summary plan description so prepared shall follow the style and format prescribed in § 2520.102–2, and shall contain all information which is required to be contained in the summary plan description under § 2520.102–3. It may omit information which is not applicable to the class of participants or beneficiaries to which it is furnished. It should also clearly identify on the first page of the text the class of participants and beneficiaries for which it has been prepared and the plan's coverage of other classes. If the classes which the employee benefit plan covers are too numerous to be listed adequately on the first page of the text of the summary plan description, they may be listed elsewhere in the text so long as the first page of the text contains a reference to the page or pages in the text which contain this information.

[67 FR 775, Jan. 7, 2002]

Subpart C—Annual Report Requirements

SOURCE: 43 FR 10140, Mar. 10, 1978, unless otherwise noted.

§ 2520.103–1 Contents of the annual report.

(a) *In general.* The administrator of a plan required to file an annual report in accordance with section 104(a)(1) of the Act shall include with the annual report the information prescribed in paragraph (a)(1) of this section or in

the simplified report, limited exemption or alternative method of compliance described in paragraph (a)(2) of this section.

(1) The annual report shall contain the information prescribed in section 103 of the Act.

(2) Under the authority of subsections 104(a)(2), 104(a)(3) and 110 of the Act, and section 1103(b) of the Pension Protection Act of 2006, a simplified report, limited exemption or alternative method of compliance is prescribed for employee welfare and pension benefit plans, as applicable. A plan filing a simplified report or electing the limited exemption or alternative method of compliance shall file an annual report containing the information prescribed in paragraph (b) or paragraph (c) of this section, as applicable, and shall furnish a summary annual report as prescribed in § 2520.104b–10.

(b) *Contents of the annual report for plans with 100 or more participants electing the limited exemption or alternative method of compliance.* Except as provided in paragraph (d) and paragraph (f) of this section and in §§ 2520.103–2 and 2520.104–44, the annual report of an employee benefit plan covering 100 or more participants at the beginning of the plan year which elects the limited exemption or alternative method of compliance described in paragraph (a)(2) of this section shall include:

(1) A Form 5500 ''Annual Return/Report of Employee Benefit Plan'' and any statements or schedules required to be attached to the form, completed in accordance with the instructions for the form, including Schedule A (Insurance Information), Schedule SB (Single-Employer Defined Benefit Plan Actuarial Information), Schedule MB (Multiemployer Defined Benefit Plan and Certain Money Purchase Plan Actuarial Information), Schedule C (Service Provider Information), Schedule D (DFE/Participating Plan Information), Schedule G (Financial Transaction Schedules), Schedule H (Financial Information), Schedule R (Retirement Plan Information), and other financial schedules described in Sec. 2520.103–10. See the instructions for this form.

(2) Separate financial statements (in addition to the information required by paragraph (b)(1) of this section), if such financial statements are prepared in order for the independent qualified public accountant to form the opinion required by section 103(a)(3)(A) of the Act and § 2520.103–1(b)(5). These statements shall include the following:

(i) A statement of assets and liabilities at current value presented in comparative form for the beginning and end of the year. The statement of plan assets and liabilities shall include the assets and liabilities required to be reported on the Form 5500; however, the assets and liabilities may be aggregated into categories in a manner other than that used on Form 5500.

(ii) Separate or combined statements of plan income and expenses and of changes in net assets which include the categories of income, expense, and changes in assets required to be reported on the Form 5500; however the income, expense, and changes in net assets may be aggregated into categories in a manner other than that used on Form 5500.

(3) Notes to the financial statements described in paragraph (b)(1) or (2) of this section which contain a description of the accounting principles and practices reflected in the financial statements and, if applicable, variances from generally accepted accounting principles; a description of the plan, including any significant changes in the plan made during the period and the impact of such changes on benefits; the funding policy (including policy with respect to prior service cost) and any changes in such policy from the prior year, a description of material lease commitments, other commitments, and contingent liabilities; a description of agreements and transactions with persons known to be parties in interest; a general description of priorities upon termination of the plan; information concerning whether or not a tax ruling or determination letter has been obtained; an explanation of the differences, if any, between the information contained in the separate financial statements and the assets, liabilities, income, expenses and changes in the net assets as required to be reported on the Form 5500, and any other matters necessary to fully and fairly present the financial condition of the plan.

(4) In the case of a plan, some or all of the assets of which are held in a pooled separate account maintained by an insurance company, or a common or collective trust maintained by a bank or similar institution, a copy of the annual statement of assets and liabilities of such account or trust for the fiscal year of the account or trust which ends with or within the plan year for which the annual report is made as required to be furnished to the administrator by such account or trust under § 2520.103–5(c). Although the statement of assets and liabilities referred to in § 2520.103–5(c) shall be considered part of the plan's annual report, such statement of assets and liabilities need not be filed with the plan's annual report. See §§ 2520.103–3 and 2520.103–4 for reporting requirements for plans some or all of the assets of which are held in a pooled separate account maintained by an insurance company, or a common or collective trust maintained by a bank or similar institution.

(5) A report of an independent qualified public accountant.

(i) *Technical requirements*. The accountant's report—

(A) Shall be dated;

(B) Shall be signed manually;

(C) Shall indicate the city and state where issued; and

(D) Shall identify without detailed enumeration the financial statements and schedules covered by the report.

(ii) *Representations as to the audit*. The accountant's report—

(A) Shall state whether the audit was made in accordance with generally accepted auditing standards; and

(B) Shall designate any auditing procedures deemed necessary by the accountant under the circumstances of the particular case which have been omitted, and the reasons for their omission. Authority for the omission of certain procedures which independent accountants might ordinarily employ in the course of an audit made for the purpose of expressing the opinions required by paragraph (b)(5)(iii) of this section is contained in §§ 2520.103–8 and 2520.103–12.

(iii) *Opinion to be expressed*. The accountant's report shall state clearly:

(A) The opinion of the accountant in respect of the financial statements and schedules covered by the report and the accounting principles and practices reflected therein; and

(B) The opinion of the accountant as to the consistency of the application of the accounting principles with the application of such principles in the preceding year or as to any changes in such principles which have a material effect on the financial statements.

(iv) *Exceptions*. Any matters to which the accountant takes exception shall be clearly identified, the exception thereto specifically and clearly stated, and, to the extent practicable, the effect of the matters to which the accountant takes exception on the related financial statements given. The matters to which the accountant takes exception shall be further identified as (A) those that are the result of DOL regulations, and (B) all others.

(c) *Contents of the annual report for plans with fewer than 100 participants*. (1) Except as provided in paragraph (c)(2), paragraph (d) and paragraph (f) of this section, and in §§ 2520.104–43, 2520.104a–6, and 2520.104–44, the annual report of an employee benefit plan that covers fewer than 100 participants at the beginning of the plan year shall include a Form 5500 ''Annual Return/Report of Employee Benefit Plan'' and any statements or schedules required to be attached to the form, completed in accordance with the instructions for the form, including Schedule A (Insurance Information), Schedule SB (Single Employer Defined Benefit Plan Actuarial Information), Schedule MB (Multiemployer Defined Benefit Plan and Certain Money Purchase Plan Actuarial Information), Schedule D (DFE/Participating Plan Information), Schedule I (Financial Information—Small Plan), and Schedule R (Retirement Plan Information). See the instructions for this form.

(2)(i) The annual report of an employee benefit plan that covers fewer than 100 participants at the beginning of the plan year and that meets the conditions in paragraph (c)(2)(ii) of this section with respect to a plan year may, as an alternative to the requirements of paragraph (c)(1) of this section, meet its annual reporting requirements by filing the Form 5500–SF ''Short Form Annual Return/Report of

Small Employee Benefit Plan'' and any statements or schedules required to be attached to the form, including Schedule SB (Single Employer Defined Benefit Plan Actuarial Information) and Schedule MB (Multiemployer Defined Benefit Plan and Certain Money Purchase Plan Actuarial Information), completed in accordance with the instructions for the form. See the instructions for this form.

(ii) A plan meets the conditions in this paragraph (c)(2)(ii) with respect to the year if the plan:

(A) Does not hold any employer securities at any time during the year;

(B) Satisfies the audit waiver conditions in §§ 2520.104–46(b)(1)(i)(A)(1), (b)(1)(i)(B) and (b)(1)(i)(C);

(C) Had at all times during the plan year 100 percent of the plan's assets held for investment purposes invested in assets that have a readily determinable fair market value. For purposes of this section, the following shall be treated as assets that have a readily determinable fair market value: Shares issued by an investment company registered under the Investment Company Act of 1940; investment and annuity contracts issued by any insurance company, qualified to do business under the laws of a State, that provides valuation information at least annually to the plan administrator; bank investment contracts issued by a bank or similar financial institution, as defined in § 2550.408b–4(c) of this chapter, that provides valuation information at least annually to the plan administrator; securities (except employer securities) traded on a public exchange; government securities issued by the United States or by a State; cash or cash equivalents held by a bank or similar financial institution, as defined in § 2550.408b–4(c) of this chapter, by an insurance company, qualified to do business under the law of a State, by an organization registered as a broker-dealer under the Securities Exchange Act of 1934, or by any other organization authorized to act as a trustee for individual retirement accounts under section 408 of the Internal Revenue Code; and any loan meeting the requirements of section 408(b)(1) of the Act and the regulations issued thereunder;

(D) Is not a multiemployer plan; and

(E) Is not a plan subject to the Form M–1 requirements under § 2520.101–2 (Filing by Multiple Employer Welfare Arrangements and Certain Other Related Entities).

(d) *Special rule.* If a plan has between 80 and 120 participants (inclusive) as of the beginning of the plan year, the plan administrator may elect to file the same category of annual report (*i.e.*, the annual report for plans with 100 or more participants under paragraph (b) of this section or the annual report for plans with fewer than 100 participants under paragraph (c) of this section) that was filed for the previous plan year.

(e) *Plans which participate in a master trust.* The plan administrator of a plan which participates in a master trust shall file an annual report on Form 5500 in accordance with the instructions for the form relating to master trusts and master trust investment accounts. For purposes of annual reporting, a master trust is a trust for which a regulated financial institution serves as trustee or custodian (regardless of whether such institution exercises discretionary authority or control respecting the management of assets held in the trust) and in which assets of more than one plan sponsored by a single employer or by a group of employers under common control are held. For purpose of this paragraph, a regulated financial institution is a bank, trust company, or similar financial institution regulated, supervised, and subject to periodic examination by a State or Federal agency. Common control is determined on the basis of all relevant facts and circumstances (whether or not such employers are incorporated).

(f) *Plans subject to the Form M–1 filing requirements under § 2520.101–2.* The annual report of an employee welfare benefit plan that is subject to the Form M–1 requirements under § 2520.101–2 (Filing by Multiple Employer Welfare Arrangements and Certain Other Related Entities) during the plan year shall also include any statements or information required by the instructions to the Form 5500 relating to compliance with the Form M–1 filing requirements under § 2520.101–2.

(g) *Electronic filing.* See § 2520.104a–2 and the instructions for the Form 5500 ''Annual Return/Report of Employee Benefit Plan'' for electronic filing requirements. The plan administrator must maintain an original copy, with all required signatures, as part of the plan's records.

[43 FR 10140, Mar. 10, 1978, as amended at 45 FR 51446, Aug. 1, 1980; 46 FR 61079, Dec. 15, 1981; 51 FR 41288, Nov. 13, 1986; 54 FR 8627, Mar. 1, 1989; 65 FR 21080, Apr. 19, 2000; 71 FR 41368, July 21, 2006; 72 FR 64727, Nov. 16, 2007; 78 FR 13796, Mar. 1, 2013]

§ 2520.103–2 Contents of the annual report for a group insurance arrangement.

(a) *General.* (1) A trust or other entity described in § 2520.104–43(b) that files an annual report for purposes of § 2520.104–43 shall include in such report the items set forth in paragraph (b) of this section.

(2) [Reserved]

(b) *Contents.* (1) A Form 5500 ''Annual Return/Report of Employee Benefit Plan'' and any statements or schedules required to be attached to the form, completed in accordance with the instructions for the form, including Schedule A (Insurance Information), Schedule C (Service Provider Information), Schedule D (DFE/Participating Plan Information), Schedule G (Financial Transaction Schedules), Schedule H (Financial Information), and the other financial schedules described in § 2520.103–10. See the instructions for this form.

(2) Separate financial statements (in addition to the information required by paragraph (b)(1) of this section), if such financial statements are prepared in order for the independent qualified public accountant to form the opinion required by section 103(a)(3)(A) of the Act and § 2520.103–2(b)(5). These financial statements shall include the following:

(i) A statement of all trust assets and liabilities at current value presented in comparative form for the beginning and end of the year. The statement of trust assets and liabilities shall include the assets and liabilities required to be reported on the Form 5500; however, the assets and liabilities may be aggregated into categories in a manner other than that used on Form 5500.

(ii) Separate or combined statements of all trust income and expenses and changes in net assets which includes the categories of income, expense, and changes in assets required to be reported on the Form 5500; however, the income, expense, and changes in assets may be aggregated into categories in a manner other than that used on Form 5500.

(3) Notes to the financial statements described in paragraph (b)(1) or (2) of this section which contain a description of the accounting principles and practices reflected in the financial statements and, if applicable, variances from generally accepted accounting principles; a description of the group insurance arrangement including any significant changes in the group insurance arrangement made during the period and the impact of such changes on benefits; a description of material lease commitments, other commitments, and contingent liabilities; a description of agreements and transactions with persons known to be parties in interest; a general description of priorities upon termination of the plan; an explanation of the differences, if any, between the information contained in the separate financial statements and the assets, liabilities, income, expenses and changes in net assets as required to be reported on the Form 5500; and any other matters necessary to fully and fairly present the financial condition of the plan.

(4) In the case of a group insurance arrangement some or all of the assets of which are held in a pooled separate account maintained by an insurance carrier, or in a common or collective trust maintained by a bank, trust company or similar institution, a copy of the annual statement of assets and liabilities of such account or trust for the fiscal year of the account or trust which ends with or within the plan year for which the annual report is made as required to be furnished by such account or trust under § 2520.103–5(c). Although the statement of assets and liabilities referred to in § 2520.103–5(c) shall be considered part of the group insurance arrangement's annual

report, such statement of assets and liabilities need not be filed with its annual report. See §§ 2520.103–3 and 2520.103–4 for reporting requirements for plans some or all of the assets of which are held in a pooled separate account maintained by an insurance company, or a common or collective trust maintained by a bank or similar institution, and see § 2520.104–43(b)(2) for when the terms ''group insurance arrangement'' or ''trust or other entity'' shall be, respectively, used in place of the terms ''plan'' and ''plan administrator.''

(5) A report of an independent qualified public accountant.

(i) *Technical requirements.* The accountant's report—

(A) Shall be dated;

(B) Shall be signed manually;

(C) Shall indicate the city and State where issued; and

(D) Shall identify without detailed enumeration the financial statements and schedules covered by the report.

(ii) *Representations as to the audit.* The accountant's report—

(A) Shall state whether the audit was made in accordance with generally accepted auditing standards; and

(B) Shall designate any auditing procedures deemed necessary by the accountant under the circumstances of the particular case, which have been omitted, and the reasons for their omission. Authority for the omission of certain procedures which independent accountants might ordinarily employ in the course of an audit made for the purpose of expressing the opinions required by paragraph (b)(5)(iii) of this section is contained in § 2520.103–8.

(iii) *Opinion to be expressed.* The accountant's report shall state clearly:

(A) The opinion of the accountant in respect of the financial statements and schedules covered by the report and the accounting principles and practices reflected therein; and

(B) The opinion of the accountant as to the consistency of the application of the accounting principles with the application of such priniciples in the preceding year, or as to any changes in such principles which have a material effect on the financial statements.

(iv) *Exceptions.* Any matters to which the accountant takes exception shall be clearly identified, the exception thereto specifically and clearly stated, and, to the extent practicable, the effect of the matters to which the accountant takes exception on the related financial statements given. The matters to which the accountant takes exception shall be further identified as to (A) those that are the result of DOL regulations and (B) all others.

(c) *Electronic filing.* See § 2520.104a–2 and the instructions for the Form 5500 ''Annual Return/Report of Employee Benefit Plan'' for electronic filing requirements. The trust or other entity described in § 2520.104–43(b) filing under this section must maintain an original copy, with all required signatures, as part of its records.

[43 FR 10140, Mar. 10, 1978, as amended at 54 FR 8627, Mar. 1, 1989; 65 FR 21080, Apr. 19, 2000; 71 FR 41368, July 21, 2006]

§ 2520.103–3 Exemption from certain annual reporting requirements for assets held in a common or collective trust.

(a) *General.* Under the authority of sections 103(b)(3)(G), 103(b)(4), 104(a)(2)(B), 104(a)(3), 110 and 505 of the Act, a plan whose assets are held in whole or in part in a common or collective trust maintained by a bank, trust company, or similar institution which meets the requirements of paragraph (b) of this section shall include as part of the annual report required to be filed under §§ 2520.104a–5 or 2520.104a–6 the information described in paragraph (c) of this section. Such plan is not required to include in its annual report information concerning the individual transactions of the common or collective trust. This exemption has no application to assets not held in such trusts.

(b) *Application.* This provision applies only to a plan some or all of the assets of which are held in a common or collective trust maintained by a bank, trust company, or similar institution regulated and supervised and subject to periodic examination by a State or Federal agency. For purposes of this section,

(1) A common or collective trust is a trust which consists of the assets of two or more participating entities and

is maintained for the collective investment and reinvestment of assets contributed thereto, and

(2) Plans maintained by a single employer or by the members of a controlled group of corporations, as defined in section 1563(a) of the Internal Revenue Code of 1954, shall be deemed to be a single participating entity.

(c) *Contents.* (1) A plan which meets the requirements of paragraph (b) of this section, and which invests in a common or collective trust that files a Form 5500 report in accordance with § 2520.103–9, shall include in its annual report: information required by the instructions to Schedule H (Financial Information) or Schedule I (Financial Information—Small Plan) about the current value of and net investment gain or loss relating to the units of participation in the common or collective trust held by the plan; identifying information about the common or collective trust including its name, employer identification number, and any other information required by the instructions to the Schedule D (DFE/Participating Plan Information); and such other information as is required in the separate statements and schedules of the annual report about the value of the plan's units of participation in the common or collective trust and transactions involving the acquisition and disposition by the plan of units of participation in the common or collective trust.

(2) A plan which meets the requirements of paragraph (b) of this section, and which invests in a common or collective trust that does not file a Form 5500 report in accordance with § 2520.103–9, shall include in its annual report: information required by the instructions to Schedule H (Financial Information) or Schedule I (Financial Information—Small Plan) about the current value of the plan's allocable portion of the underlying assets and liabilities of the common or collective trust and the net investment gain or loss relating to the units of participation in the common or collective trust held by the plan; identifying information about the common or collective trust including its name, employer identification number, and any other information required by the instructions to the Schedule D (DFE/Participating Plan Information); and such other information as is required in the separate statements and schedules of the annual report about the value of the plan's units of participation in the common or collective trust and transactions involving the acquisition and disposition by the plan of units of participation in the common or collective trust.

[43 FR 10140, Mar. 10, 1978, as amended at 65 FR 21081, Apr. 19, 2000]

§ 2520.103–4 Exemption from certain annual reporting requirements for assets held in an insurance company pooled separate account.

(a) *General.* Under the authority of sections 103(b)(3)(G), 103(b)(4), 104(a)(2)(B), 104(a)(3), 110 and 505 of the Act, a plan whose assets are held in whole or in part in a pooled separate account of an insurance carrier which meets the requirements of paragraph (b) of this section shall include as part of the annual report required to be filed under § 2520.104a–5 or § 2520.104a–6 the information described in paragraph (c) of this section. Such plan is not required to include in its annual report information concerning the individual transactions of the pooled separate account. This exemption has no application to assets not held in such a pooled separate account.

(b) *Application.* This provision applies only to a plan some or all of the assets of which are held in a pooled separate account of an insurance carrier regulated and supervised and subject to periodic examination by a State agency. For purposes of this section, (1) a pooled separate account is an account which consists of the assets of two or more participating entities and is maintained for the collective investment and reinvestment of assets contributed thereto, and (2) plans maintained by a single employer or by members of a controlled group of corporations, as defined in section 1563(a) of the Internal Revenue Code of 1954, shall be deemed to be a single participating entity.

(c) *Contents.* (1) A plan which meets the requirements of paragraph (b) of this section, and which invests in a pooled separate account that files a Form 5500 report in accordance with

§ 2520.103–9, shall include in its annual report: information required by the instructions to Schedule H (Financial Information) or Schedule I (Financial Information—Small Plan) about the current value of, and net investment gain or loss relating to, the units of participation in the pooled separate account held by the plan; identifying information about the pooled separate account including its name, employer identification number, and any other information required by the instructions to the Schedule D (DFE/Participating Plan Information); and such other information as is required in the separate statements and schedules of the annual report about the value of the plan's units of participation in the pooled separate accounts and transactions involving the acquisition and disposition by the plan of units of participation in the pooled separate account.

(2) A plan which meets the requirements of paragraph (b) of this section, and which invests in a pooled separate account that does not file a Form 5500 report in accordance with § 2520.103–9, shall include in its annual report: information required by the instructions to Schedule H (Financial Information) or Schedule I (Financial Information—Small Plan) about the current value of the plan's allocable portion of the underlying assets and liabilities of the pooled separate account and the net investment gain or loss relating to the units of participation in the pooled separate account held by the plan; identifying information about the pooled separate account including its name, employer identification number, and any other information required by the instructions to the Schedule D (DFE/Participating Plan Information); and such other information as is required in the separate statements and schedules of the annual report about the value of the plan's units of participation in the pooled separate account and transactions involving the acquisition and disposition by the plan of units of participation in the pooled separate account.

[43 FR 10140, Mar. 10, 1978, as amended at 65 FR 21081, Apr. 19, 2000]

§ 2520.103–5 Transmittal and certification of information to plan administrator for annual reporting purposes.

(a) *General.* In accordance with section 103(a)(2) of the Act, an insurance carrier or other organization which provides benefits under the plan or holds plan assets, a bank or similar institution which holds plan assets, or a plan sponsor shall transmit and certifty such information as needed by the administrator to file the annual report under section 104(a)(1) of the Act and § 2520.104a–5 or § 2520.104a–6:

(1) Within 9 months after the close of the plan year which begins in 1975 or September 30, 1976, whichever is later, and

(2) Within 120 days after the close of any plan year which begins after December 31, 1975.

(b) *Application.* This requirement applies with respect to—

(1) An insurance carrier or other organization which:

(i) Provides from its general asset account funds for the payment of benefits under a plan, or

(ii) Holds assets of a plan in a separate account;

(2) A bank, trust company, or similar institution which holds assets of a plan in a common or collective trust, separate trust, or custodial account; and

(3) A plan sponsor as defined in section 3(16)(B) of the Act.

(c) *Contents.* The information required to be provided to the administrator shall include—

(1) In the case of an insurance carrier or other organization which:

(i) Provides funds from its general asset account for the payment of benefits under a plan, upon request of the plan administrator, such information as is contained within the ordinary business records of the insurance carrier or other organization and is needed by the plan administrator to comply with the requirements of section 104(a)(1) of the Act and § 2520.104a–5 or § 2520.104a–6;

(ii) Holds assets of a plan in a pooled separate account and files a Form 5500 report pursuant to § 2520.103–9 for the participating plan's plan year—

(A) A copy of the annual statement of assets and liabilities of the separate

account for the fiscal year of such account ending with or within the plan year for which the participating plan's annual report is made,

(B) A statement of the value of the plan's units of participation in the separate account,

(C) The Employer Identification Number (EIN) of the separate account, entity number required for purposes of completing the Form 5500 and any other identifying number assigned by the insurance carrier to the separate account,

(D) A statement that a filing pursuant to § 2520.103–9(c) will be made for the separate account (for its fiscal year ending with or within the participating plan's plan year) on or before the filing due date for such account in accordance with the Form 5500 instructions, and

(E) Upon request of the plan administrator, any other information that can be obtained from the ordinary business records of the insurance carrier and that is needed by the plan administrator to comply with the requirements of section 104(a)(1) of the Act and § 2520.104a–5 or § 2520.104a–6;

(iii) Holds assets of a plan in a pooled separate account and does not file a Form 5500 report pursuant to § 2520.103–9 for the participating plan's plan year—

(A) A copy of the annual statement of assets and liabilities of the separate account for the fiscal year of such account that ends with or within the plan year for which the participating plan's annual report is made,

(B) A statement of the value of the plan's units of participation in the separate account,

(C) The EIN of the separate account and any other identifying number assigned by the insurance carrier to the separate account,

(D) A statement that a filing pursuant to § 2520.103–9(c) will not be made for the separate account for its fiscal year ending with or within the participating plan's plan year, and

(E) Upon request of the plan administrator, any other information that can be obtained from the ordinary business records of the insurance carrier and that is needed by the plan administrator to comply with the requirements of section 104(a)(1) of the Act and § 2520.104a–5 or § 2520.104a–6.

(iv) Holds assets of a plan in a separate account which is not exempted from certain reporting requirements under § 2520.103–4, a listing of all transactions of the separate account and, upon request of the plan administrator, such information as is contained within the ordinary business records of the insurance carrier and is needed by the plan administrator to comply with the requirements of section 104(a)(1) of the Act and § 2520.104a–5 or § 2520.104a–6.

(2) In the case of a bank, trust company, or similar institution holding assets of a plan—

(i) In a common or collective trust that files a Form 5500 report pursuant to § 2520.103–9 for the participating plan's plan year—

(A) A copy of the annual statement of assets and liabilities of the common or collective trust for the fiscal year of such trust ending with or within the plan year for which the participating plan's annual report is made,

(B) A statement of the value of the plan's units of participation in the common or collective trust,

(C) The EIN of the common or collective trust, entity number assigned for purposes of completing the Form 5500 and any other identifying number assigned by the bank, trust company, or similar institution,

(D) A statement that a filing pursuant to § 2520.103–9(c) will be made for the common or collective trust (for its fiscal year ending with or within the participating plan's plan year) on or before the filing due date for such trust in accordance with the Form 5500 instructions, and

(E) Upon request of the plan administrator, any other information that can be obtained from the ordinary business records of the bank, trust company or similar institution and that is needed by the plan administrator to comply with the requirements of section 104(a)(1) of the Act and §§ 2520.104a–5 or 2520.104a–6.

(ii) In a common or collective trust that does not file a Form 5500 report pursuant to § 2520.103–9 for the participating plan's plan year—

(A) A copy of the annual statement of assets and liabilities of the common

or collective trust for the fiscal year of such account that ends with or within the plan year for which the participating plan's annual report is made,

(B) A statement of the value of the plan's units of participation in the common or collective trust,

(C) The EIN of the common or collective trust and any other identifying number assigned by the bank, trust company or similar institution,

(D) A statement that a filing pursuant to § 2520.103–9(c) will not be made for the common or collective trust for its fiscal year ending with or within the participating plan's plan year, and

(E) Upon request of the plan administrator, any other information that can be obtained from the ordinary business records of the bank, trust company or similar institution and that is needed by the plan administrator to comply with the requirements of section 104(a)(1) of the Act and §§ 2520.104a–5 or 2520.104a–6.

(iii) In a trust which is not exempted from certain reporting requirements under § 2520.103–3, a listing of all transactions of the separate trust and, upon request of the plan administrator, such information as is contained within the ordinary business records of the bank, trust company, or similar institution and is needed by the plan administrator to comply with the requirements of section 104(a)(1) of the Act and § 2520.104a–5.

(iv) In a custodial account, upon request of the plan administrator, such information as is contained within the ordinary business records of the bank, trust company, or similar institution and is needed by the plan administrator to comply with the requirements of section 104(a)(1) of the Act and § 2520.104a–5 or § 2520.104a–6.

(3) In the case of a plan sponsor, a listing of all transactions directly or indirectly involving plan assets engaged in by the plan sponsor and such information as is needed by the plan administrator to comply with the requirements of section 104(a)(1) of the Act and § 2520.104a–5 or § 2520.104a–6.

(d) *Certification.* (1) An insurance carrier or other organization, a bank, trust company, or similar institution, or plan sponsor, as described in paragraph (b) of this section, shall certify to the accuracy and completeness of the information described in paragraph (c) of this section by a written declaration which is signed by a person authorized to represent the insurance carrier, bank, or plan sponsor. Such certification will serve as a written assurance of the truth of the facts stated therein.

(2) *Example of Certification.* The XYZ Bank (Insurance Carrier) hereby certifies that the foregoing statement furnished pursuant to 29 CFR 2520.103–5(c) is complete and accurate.

[43 FR 10140, Mar. 10, 1978, as amended at 65 FR 21082, Apr. 19, 2000]

§ 2520.103–6 Definition of reportable transaction for Annual Return/Report.

(a) *General.* For purposes of preparing the schedule of reportable transactions described in § 2520.103–10(b)(6), and subject to the exceptions provided in §§ 2520.103–3, 2520.103–4 and 2520.103–12, with respect to individual transactions by a common or collective trust, pooled separate account, or a 103–12 investment entity, a reportable transaction includes any transaction or series of transactions described in paragraph (c) of this section.

(b) *Definitions.* (1)(i) Except as provided in paragraphs (c)(2) and (d)(1)(vi) of this section (relating to assets acquired or disposed of during the plan year), ''current value'' shall mean the current value, as defined in section 3(26) of the Act, of plan assets as of the beginning of the plan year, or the end of the previous plan year.

(ii) Except as provided in paragraphs (c)(2) and (d)(1)(vi) of this section (relating to assets acquired or disposed of during the plan year), with respect to schedules of reportable transactions for the initial plan year of a plan, ''current value'' shall mean the current value, as defined in section 3(26) of the Act, of plan assets at the end of a plan's initial plan year.

(2)(i) A ''transaction with respect to securities'' is any purchase, sale, or exchange of securities. A transaction with respect to securities for purposes of this section occurs on either the trade date or settlement date of a purchase, sale, or exchange of securities; either the trade date or settlement

date must be used consistently during the plan year for the purposes of this section. For the purposes of this section, except as provided in paragraph (b)(2)(ii) of this section, ''securities'' includes a unit of participation in a common or collective trust or a pooled separate account.

(ii) Solely for purposes of paragraph (c)(1)(iv) of this section, the term ''securities'', as it applies to any transaction involving a bank or insurance company regulated by a Federal or State agency, an investment company registered under the Investment Company Act of 1940, or a broker-dealer registered under the Securities Exchange Act of 1934, shall not include:

(A) Debt obligations of the United States or any United States agency with a maturity of not more than one year;

(B) Debt obligations of the United States or any United States agency with a maturity of more than one year if purchased or sold under a repurchase agreement having a term of less than 91 days;

(C) Interests issued by a company registered under the Investment Company Act of 1940;

(D) Bank certificates of deposit with a maturity of not more than one year;

(E) Commercial paper with a maturity of not more than nine months if it is ranked in the highest rating category for commercial paper by at least two nationally recognized statistical rating services and is issued by a company required to file reports under section 13 of the Securities Exchange Act of 1934;

(F) Participations in a bank common or collective trust;

(G) Participations in an insurance company pooled separate account;

(3)(i) Except as provided by paragraph (b)(3)(ii) of this section, a transaction is ''with or in conjunction with a person'' for purposes of this section if that person benefits from, executes, facilitates, participates, promotes, or solicits a transaction or part of a transaction involving plan assets.

(ii) Solely for the purposes of paragraph (c)(1)(iv) of this section, a transaction shall not be considered ''with or in conjunction with a person'' if:

(A) That person is a broker-dealer registered under the Securities Exchange Act of 1934;

(B) The transaction involves the purchase or sale of securities listed on a national securities exchange registered under section 6 of the Securities Exchange Act of 1934 or quoted on NASDAQ; and

(C) The broker-dealer does not purchase or sell securities involved in the transaction for its own account or the account of an affiliated person.

(c) *Application.* (1) Except as provided in paragraph (c)(4) of this section, this provision applies to—

(i) A transaction within the plan year, with respect to any plan asset, involving an amount in excess of 3 percent of the current value of plan assets;

(ii) Any series of transactions (other than transactions with respect to securities) within the plan year with or in conjunction with the same person which, when aggregated, regardless of the category of asset and the gain or loss on any transaction, involves an amount in excess of 3 percent of the current value of plan assets;

(iii) Any transaction within the plan year involving securities of the same issue if within the plan year any series of transactions with respect to such securities, when aggregated, involves an amount in excess of 3 percent of the current value of plan assets; and

(iv) Any transaction within the plan year with respect to securities with or in conjunction with a person if any prior or subsequent single transaction within the plan year with such person with respect to securities exceeds 3 percent of the current value of plan assets.

(2) For purposes of determining whether any 3 percent transactions occur, the ''current value'' of an asset acquired or disposed of during the plan year is the current value, as defined in section 3(26) of the Act, at the time of acquisition or disposition of such asset.

(3) Plans whose assets are held in whole or in part in a common or collective trust or a pooled separate account, as provided in §§ 2520.103–3 and 2520.103–4, and which satisfy the requirements of those sections, are not required to prepare schedules of reportable transactions with respect to the individual

transactions of the common or collective trust or pooled separate account.

(4) For plan years beginning on or after January 1, 1988, 5 percent shall be substituted for 3 percent in paragraphs (c)(1) and (2) of this section for purposes of determining whether a transaction or series of transactions constitutes a reportable transaction under this section.

(d) *Contents.* (1) The schedule of transactions shall include the following information as to each transaction or series of transactions:

(i) The name of each party, except that in the case of a transaction or series of transactions involving a purchase or sale of a security on the market, the schedule need not include the person from whom it was purchased or to whom it was sold. A purchase or sale on the market is a purchase or sale of a security through a registered broker-dealer acting as a broker under the Securities Exchange Act of 1934;

(ii) A brief description of each asset;

(iii) The purchase or selling price in the case of a purchase or sale, the rental in the case of a lease, and the amount of principal, interest rate, payment schedule (e.g., fully amortized, partly amortized with balloon) and maturity date in the case of a loan;

(iv) Expenses incurred, including, but not limited to, any fees or commissions;

(v) The cost of any asset;

(vi) The current value of any asset acquired or disposed of at the time of acquisition or disposition; and

(vii) The net gain or loss.

(2) The schedule of transactions with respect to a series of transactions described in paragraph (c)(1)(iii) may include the following information for each issue in lieu of the information prescribed in paragraphs (d)(1)(i) through (vii):

(i) The total number of purchases of such securities made by the plan within the plan year;

(ii) The total number of sales of such securities made by the plan within the plan year;

(iii) The total dollar value of such purchases;

(iv) The total dollar value of such sales;

(v) The net gain or loss as a result of these transactions.

(e) *Examples.* These examples are effective for reporting for plan years beginning on or after January 1, 1988.

(1) At the beginning of the plan year, XYZ plan has 10 percent of the current value of its plan assets invested in ABC common stock. Halfway through the plan year, XYZ purchases ABC common stock in a single transaction in an amount equal to 6 percent of the current value of plan assets. At about this time, XYZ plan also purchases a commercial development property in an amount equal to 8 percent of the current value of plan assets. Under paragraph (c)(1)(i) of this section, the 6 percent stock transaction is a reportable transaction for the plan year because it exceeds 5 percent of the current value of plan assets. The 8 percent land transaction is also reportable under paragraph (c)(1)(i) of this section because it exceeds 5 percent of the current value of plan assets.

(2) During the plan year, AAA plan purchases a commercial lot from ZZZ corporation at a cost equal to 2 percent of the current value of the plan assets. Two months later, AAA plan loans ZZZ corporation an amount of money equal to 3.5 percent of the current value of plan assets. Under the provisions of paragraph (c)(1)(ii) of this section, the plan has engaged in a reportable series of transactions with or in conjunction with the same person, ZZZ corporation, which when aggregated involves 5.5 percent of plan assets.

(3) During the plan year NMN plan sells to OPO corporation a commercial property that represents 3.5 percent of the current value of plan assets. OPO simultaneously executes a note and mortgage on the purchased property to NMN which represents 3 percent of the current value of plan assets. Under the provisions of paragraph (c)(1)(ii) of this section, NMN has engaged in a reportable series of transactions with or in conjunction with the same person, OPO corporation, consisting of a simultaneous sale of property and a loan, which, when aggregated, involves 6.5 percent of the current value of plan assets.

(4) At the beginning of the plan year, ABC plan has 10 percent of the current

value of plan assets invested equally in a combination of XYZ Corporation common stock and XYZ preferred stock. One month into the plan year, ABC sells some of its XYZ common stock in an amount equal to 2 percent of the current value of plan assets.

(i) Six weeks later the plan sells XYZ preferred stock in an amount equal to 4 percent of the current value of plan assets. A reportable series of transactions has not occurred because only transactions involving securities of the same issue are to be aggregated under paragraph (c)(1)(iii) of this section.

(ii) Two weeks later when the ABC plan purchases XYZ common stock in an amount equal to 3.5 percent of the current value of plan assets, a reportable series of transactions under paragraph (c)(1)(iii) of this section has occurred. The sale of XYZ common stock worth 2 percent of plan assets and the purchase of XYZ common stock worth 3.5 percent of plan assets aggregate to exceed 5 percent of the total value of plan assets.

(5) At the beginning of the plan year, Plan X purchases through broker-dealer Y common stock of Able Industries in an amount equal to 6 percent of plan assets. The common stock of Able Industries is not listed on any national securities exchange or quoted on NASDAQ. This purchase is a reportable transaction under paragraph (c)(1)(i) of this section. Three months later, Plan X purchases short term debt obligations of Charley Company through broker-dealer Y in the amount of 0.2 percent of plan assets. This purchase is also a reportable transaction under the provisions of paragraph (c)(1)(iv) of this section.

(6) At the beginning of the plan year, Plan X purchases from Bank B certificates of deposit having a 180 day maturity in an amount equal to 6 percent of plan assets. Bank B is a national bank regulated by the Comptroller of the Currency. This purchase is a reportable transaction under paragraph (c)(1)(i) of this section. Three months later, Plan X purchases through Bank B 91-day Treasury bills in the amount of 0.2 percent of plan assets. This purchase is not a reportable transaction under paragraph (c)(1)(iv) of this section because the purchase of the Treasury bills as well as the purchase of the certificates of deposit are not considered to involve a security under the definition of ''securities'' in paragraph (b)(2)(ii) of this section.

(7) At the beginning of the plan year, Plan X purchases through broker-dealer Y common stock of Able Industries, a New York Stock Exchange listed security, in an amount equal to 6 percent of plan assets. This purchase is a reportable transaction under paragraph (c)(1)(i) of this section. Three months later, Plan X purchases through broker-dealer Y, acting as agent, common stock of Baker Corporation, also a New York Stock Exchange listed security, in an amount equal to 0.2 percent of plan assets. This latter purchase is not a reportable transaction under paragraph (c)(1)(iv) of this section because it is not a transaction ''with or in conjunction with a person'' pursuant to paragraph (b)(3)(ii) of this section.

(f) *Special rule for certain participant-directed transactions.* Participant or beneficiary directed transactions under an individual account plan shall not be taken into account under paragraph (c)(1) of this section for purposes of preparing the schedule of reportable transactions described in this section. For purposes of this section only, a transaction will be considered directed by a participant or beneficiary if it has been authorized by such participant or beneficiary.

[43 FR 10140, Mar. 10, 1978; 43 FR 14009, Apr. 4, 1978, as amended at 54 FR 8628, Mar. 1, 1989; 61 FR 33849, July 1, 1996; 65 FR 21082, Apr. 19, 2000]

§ 2520.103–8 Limitation on scope of accountant's examination.

(a) *General.* Under the authority of section 103(a)(3)(C) of the Act, the examination and report of an independent qualified public accountant need not extend to any statement or information prepared and certified by a bank or similar institution or insurance carrier. A plan, trust or other entity which meets the requirements of paragraph (b) of this section is not required to have covered by the accountant's examination or report any of the information described in paragraph (c) of this section.

(b) *Application.* This section applies to any plan, trust or other entity some or all of the assets of which are held by a bank or similar institution or insurance carrier which is regulated and supervised and subject to periodic examination by a State or Federal agency.

(c) *Excluded information.* Any statements or information certified to by a bank or similar institution or insurance carrier described in paragraph (b) of this section, provided that the statements or information regarding assets so held are prepared and certified to by the bank or insurance carrier in accordance with § 2520.103–5.

§ 2520.103–9 Direct filing for bank or insurance carrier trusts and accounts.

(a) *General.* Under the authority of sections 103(b)(4), 104(a)(3), 110 and 505 of the Act, an employee benefit plan, some or all of the assets of which are held in a common or collective trust or a pooled separate account described in section 103(b)(3)(G) of the Act and §§ 2520.103–3 and 2520.103–4, is relieved from including in its annual report information about the current value of the plan's allocable portion of assets and liabilities of the common or collective trust or pooled separate account and information concerning the individual transactions of the common or collective trust or pooled separate account, provided that the plan meets the requirements of paragraph (b) of this section, and, provided further, that the bank or insurance carrier which holds the plan's assets meets the requirements of paragraph (c) of this section.

(b) *Application.* A plan whose assets are held in a common or collective trust or a pooled separate account described in section 103(b)(3)(G) of the Act and §§ 2520.103–3 and 2520.103–4, provided the plan administrator, on or before the end of the plan year, provides the bank or insurance carrier which maintains the common or collective trust or pooled separate account with the plan number, and name and Employer Identification Number of the plan sponsor as will be reported on the plan's annual report.

(c) *Separate filing by common or collective trusts and pooled separate accounts.* The bank or insurance carrier which maintains the common or collective trust or pooled separate account in which assets of the plan are held shall file, in accordance with the instructions for the form, a completed Form 5500 ''Annual Return/Report of Employee Benefit Plan'' and any statements or schedules required to be attached to the form for the common or collective trust or pooled separate account, including Schedule D (DFE/Participating Plan Information) and Schedule H (Financial Information). See the instructions for this form. The information reported shall be for the fiscal year of such trust or account ending with or within the plan year for which the annual report of the plan is made.

(d) *Electronic filing.* See § 2520.104a–2 and the instructions for the Form 5500 ''Annual Return/Report of Employee Benefit Plan'' for electronic filing requirements. The bank or insurance company which maintains the common or collective trust or pooled separate account must maintain an original copy, with all required signatures, as part of its records.

[65 FR 21082, Apr. 19, 2000, as amended at 71 FR 41368, July 21, 2006]

§ 2520.103–10 Annual report financial schedules.

(a) *General.* The administrator of a plan filing an annual report pursuant to § 2520.103–1(a)(2) or the report for a group insurance arrangement pursuant to § 2520.103–2 shall, as provided in the instructions to the Form 5500 ''Annual Return/Report of Employee Benefit Plan,'' include as part of the annual report the separate financial schedules described in paragraph (b) of this section.

(b) *Schedules*—(1) *Assets held for investment.* (i) A schedule of all assets held for investment purposes at the end of the plan year (see § 2520.103–11) with assets aggregated and identified by:

(A) Identity of issue, borrower, lessor or similar party to the transaction (including a notation as to whether such party is known to be a party in interest);

(B) Description of investment including maturity date, rate of interest, collateral, par, or maturity value;

(C) Cost; and

(D) Current value, and, in the case of a loan, the payment schedule.

(ii) Except as provided in the Form 5500 and the instructions thereto, in the case of assets or investment interests of two or more plans maintained in one trust, all entries on the schedule of assets held for investment purposes that relate to the trust shall be completed by including the plan's allocable portion of the trust.

(2) *Assets acquired and disposed within the plan year.* (i) A schedule of all assets acquired and disposed of within the plan year (see § 2520.103–11) with assets aggregated and identified by:

(A) Identity of issue, borrower, issuer or similar party;

(B) Descriptions of investment including maturity date, rate of interest, collateral, par, or maturity value;

(C) Cost of acquisitions; and

(D) Proceeds of dispositions.

(ii) Except as provided in the Form 5500 and the instructions thereto, in the case of assets or investment interests of two or more plans maintained in one trust, all entries on the schedule of assets held for investment purposes that relate to the trust shall be completed by including the plan's allocable portion of the trust.

(3) *Party in interest transactions.* A schedule of each transaction involving a person known to be a party in interest except do not include:

(i) A transaction to which a statutory exemption under part 4 of title I applies;

(ii) A transaction to which an administrative exemption under section 408(a) of the Act applies; or

(iii) A transaction to which the exemptions of section 4975(c) or 4975(d) of the Internal Revenue Code (Title 26 of the United States Code) applies.

(4) *Obligations in default.* A schedule of all loans or fixed income obligations which were in default as of the end of the plan year or were classified during the year as uncollectible.

(5) *Leases in default.* A schedule of all leases which were in default or were classified during the year as uncollectible.

(6) *Reportable transactions.* A schedule of all reportable transactions as defined in § 2520.103–6.

(c) *Format requirements for certain schedules.* See the instructions to the Form 5500 ''Annual Return/Report of Employee Benefit Plan'' as to the format requirement for the schedules referred to in paragraphs (b)(1), (b)(2) or (b)(6) of this section.

[65 FR 21083, Apr. 19, 2000]

§ 2520.103–11 Assets held for investment purposes.

(a) *General.* For purposes of preparing the schedule of assets held for investment purposes described in § 2520.103–10(b)(1) and (2), assets held for investment purposes include those assets described in paragraph (b) of this section.

(b) *Definitions.* (1) Assets held for investment purposes shall include:

(i) Any investment asset held by the plan on the last day of the plan year; and

(ii) Any investment asset which was purchased at any time during the plan year and was sold at any time before the last day of the plan year, except as provided by paragraphs (b)(2) and (b)(3) of this section.

(2) Assets held for investment purposes shall not include any investment which was not held by the plan on the last day of the plan year for which the annual report is filed if that investment falls within any of the following categories:

(i) Debt obligations of the United States or any agency of the United States;

(ii) Interests issued by a company registered under the Investment Company Act of 1940;

(iii) Bank certificates of deposit with a maturity of not more than one year;

(iv) Commerical paper with a maturity of not more than nine months if it is ranked in the highest rating category by at least two nationally recognized statistical rating services and is issued by a company required to file reports with the Securities and Exchange Commission under section 13 of the Securities Exchange Act of 1934;

(v) Participations in a bank common or collective trust;

(vi) Participations in an insurance company pooled separate account;

(vii) Securities purchased from a person registered as a broker-dealer under the Securities Exchange Act of 1934 and

listed on a national securities exchange registered under section 6 of the Securities Exchange Act of 1934 or quoted on NASDAQ;

(3) Assets held for investment purposes shall not include any investment which was not held by the plan on the last day of the plan year for which the annual report is filed if that investment is reported on the annual report of that same plan in any of the following:

(i) The schedule of each transaction involving a person known to be a party in interest required by section 103(b)(3)(D) of the Act and § 2520.103–10(b)(3);

(ii) The schedule of loans or fixed income obligations in default required by section 103(b)(3)(E) of the Act and § 2520.103–10(b)(4);

(iii) The schedule of leases in default or classified as uncollectible required by section 103(b)(3)(F) of the Act and § 2520.103–10(b)(5); or

(iv) The schedule of reportable transactions required by section 103(b)(3)(H) of the Act and § 2520.103–10(b)(6).

(c) *Examples*. (1) On February 1, 1977, plan N purchases an interest in registered investment company F (fund F). Fund F is not a party in interest with respect to plan N. On November 1, 1977, plan N sells this interest in fund F and purchases 1,000 shares of stock S, which the plan holds for the rest of the plan year. Plan N must include in its schedule of assets held for investment purposes the 1,000 shares of stock S under paragraph (b)(1) of this section, but need not include the interest in fund F because of paragraph (b)(2)(ii) of this section.

(2) On February 1, 1977, plan N purchases a parcel of real estate from Mr. M, who is not a party in interest with respect to plan N. On November 1, 1977, plan N sells the parcel of real estate for cash to Mr. X, who is not a party in interest with respect to plan N. Plan N uses the cash from this transaction to purchase a 1-year certificate of deposit in bank B, which it holds until maturity in 1978. Plan N must include in its schedule of assets held for investment purposes the 1-year certificate of deposit in bank B under paragraph (b)(1)(i) of this section, and must also include the parcel of real estate under paragraph (b)(1)(ii) of this section.

(d) *Special rule for certain participant-directed transactions*. Cost information may be omitted from the schedule of assets held for investment purposes for assets described in paragraphs (b)(1)(i) and (b)(1)(ii) of this section only with respect to participant or beneficiary directed transactions under an individual account plan. For purposes of this section only, a transaction will be considered directed by a participant or beneficiary if it has been authorized by such participant or beneficiary.

[43 FR 10140, Mar. 10, 1978, as amended at 65 FR 21083, Apr. 19, 2000]

§ 2520.103–12 Limited exemption and alternative method of compliance for annual reporting of investments in certain entities.

(a) This section prescribes an exemption from and alternative method of compliance with the annual reporting requirements of part 1 of title I of ERISA for employee benefit plans whose assets are invested in certain entities described in paragraph (c). A plan utilizing this method of reporting shall include as part of its annual report the current value of its investment or units of participation in the entity in the manner prescribed by the Return/Report Form and the instructions thereto. The plan is not required to include in its annual report any information regarding the underlying assets or individual transactions of the entity, provided the information described in paragraph (b) regarding the entity is reported directly to the Department on behalf of the plan administrator on or before the filing due date for the entity in accordance with the instructions to the Form 5500 Annual Return/Report. The information described in paragraph (b), however, shall be considered as part of the annual report for purposes of the requirements of section 104(a)(1) of the Act and §§ 2520.104a–5 and 2520.104a–6.

(b) The following information must be filed regarding the entity described in paragraph (c) of this section:

(1) A Form 5500 ''Annual Return/Report of Employee Benefit Plan'' and any statements or schedules required

to be attached to the form for such entity, completed in accordance with the instructions for the form, including Schedule A (Insurance Information), Schedule C (Service Provider Information), Schedule D (DFE/Participating Plan Information), Schedule G (Financial Transaction Schedules), Schedule H (Financial Information), and the schedules described in § 2520.103–10(b)(1) and (b)(2). See the instructions for this form. The information reported shall be for the fiscal year of such entity ending with or within the plan year for which the annual report of the plan is made.

(2) A report of an independent qualified public accountant regarding the financial statements and schedules described in paragraph (b)(1) of this section which meets the requirements of § 2520.103–1(b)(5).

(c) This method of reporting is available to any employee benefit plan which has invested in an entity the assets of which are deemed to include plan assets under § 2510.3–101, provided the entity holds the assets of two or more plans which are not members of a ''related group'' of employee benefit plans as that term is defined in paragraph (e) of this section. The method of reporting is not available for investments in an insurance company pooled separate account or a common or collective trust maintained by a bank, trust company, or similar institution.

(d) The examination and report of an independent qualified public accountant required by § 2520.103–1 for a plan utilizing the method of reporting described in this section need not extend to any information concerning an entity which is reported directly to the Department under paragraph (b) of this section.

(e) A ''related group'' of employee benefit plans consists of every group of two or more employee benefit plans—

(1) Each of which receives 10 percent or more of its aggregate contributions from the same employer or from members of the same controlled group of corporations (as determined under section 1563(a) of the Internal Revenue Code, without regard to section 1563(a)(4) thereof); or

(2) Each of which is either maintained by, or maintained pursuant to a collective bargaining agreement negotiated by, the same employee organization or affiliated employee organizations. For purposes of this paragraph, an ''affiliate'' of an employee organization means any person controlling, controlled by, or under common control with such organization, and includes any organization chartered by the same parent body, or governed by the same constitution and bylaws, or having the relation of parent and subordinate.

(f) *Electronic filing*. See § 2520.104a–2 and the instructions for the Form 5500 ''Annual Return/Report of Employee Benefit Plan'' for electronic filing requirements. The entity described in paragraph (c) of this section must maintain an original copy, with all required signatures, as part of its records.

[51 FR 41287, Nov. 13, 1986, as amended at 65 FR 21083, Apr. 19, 2000; 71 FR 41368, July 21, 2006]

§ 2520.103–13 Special terminal report for abandoned plans.

(a) *General*. The terminal report required to be filed by the qualified termination administrator pursuant to § 2578.1(d)(2)(viii) of this chapter shall consist of the items set forth in paragraph (b) of this section. Such report shall be filed in accordance with the method of filing set forth in paragraph (c) of this section and at the time set forth in paragraph (d) of this section.

(b) *Contents*. The terminal report described in paragraph (a) of this section shall contain:

(1) Identification information concerning the qualified termination administrator and the plan being terminated.

(2) The total assets of the plan as of the date the plan was deemed terminated under § 2578.1(c) of this chapter, prior to any reduction for termination expenses and distributions to participants and beneficiaries.

(3) The total termination expenses paid by the plan and a separate schedule identifying each service provider and amount received, itemized by expense.

(4) The total distributions made pursuant to § 2578.1(d)(2)(vii) of this chapter and a statement regarding whether

any such distributions were transfers under § 2578.1(d)(2)(vii)(B) of this chapter.

(5) The identification, fair market value and method of valuation of any assets with respect to which there is no readily ascertainable fair market value.

(c) *Method of filing*. The terminal report described in paragraph (a) shall be filed:

(1) On the most recent Form 5500 available as of the date the qualified termination administrator satisfies the requirements in § 2578.1(d)(2)(i) through § 2578.1(d)(2)(vii) of this chapter; and

(2) In accordance with the Form's instructions pertaining to terminal reports of qualified termination administrators.

(d) *When to file*. The qualified termination administrator shall file the terminal report described in paragraph (a) within two months after the end of the month in which the qualified termination administrator satisfies the requirements in § 2578.1(d)(2)(i) through § 2578.1(d)(2)(vii) of this chapter.

(e) *Limitation*. (1) Except as provided in this section, no report shall be required to be filed by the qualified termination administrator under part 1 of title I of ERISA for a plan being terminated pursuant to § 2578.1 of this chapter.

(2) Filing of a report under this section by the qualified termination administrator shall not relieve any other person from any obligation under part 1 of title I of ERISA.

[71 FR 20853, Apr. 21, 2006]

Subpart D—Provisions Applicable to Both Reporting and Disclosure Requirements

(The information collection requirements contained in subpart D were approved by the Office of Management and Budget under control number 1210–0016)

§ 2520.104–1 General.

The administrator of an employee benefit plan covered by part 1 of title I of the Act must file reports and additional information with the Secretary of Labor, and disclose reports, statements, and documents to plan participants and to beneficiaries receiving benefits from the plan. The regulations contained in this subpart are applicable to both the reporting and disclosure requirements of part 1 of title I of the Act. Regulations concerning only a plan administrator's duty of reporting to the Secretary of Labor are set forth in subpart E of this part, and those applicable only to the duty of disclosure to participants and beneficiaries are set forth in subpart F of this part.

[41 FR 16962, Apr. 23, 1976]

§§ 2520.104–2—2520.104–3 [Reserved]

§ 2520.104–4 Alternative method of compliance for certain successor pension plans.

(a) *General*. Under the authority of section 110 of the Act, this section sets forth an alternative method of compliance for certain successor pension plans in which some participants and beneficiaries not only have their rights set out in the plan, but also retain eligibility for certain benefits under the terms of a former plan which has been merged into the successor. This section is applicable only to plan mergers which occur after the issuance by the successor plan of the initial summary plan description under the Act. Under the alternative method, the plan administrator of the successor plan is not required to describe relevant provisions of merged plans in summary plan descriptions of the successor plan furnished after the merger to that class of participants and beneficiaries still affected by the terms of the merged plans.

(b) *Scope and application*. This alternative method of compliance is available only if:

(1) The plan administrator of the successor plan furnishes to the participants covered under the predecessor plan and beneficiaries receiving pension benefits under the merged plan within 90 days after the effective date of the merger:

(i) A copy of the most recent summary plan description of the successor plan;

(ii) A copy of any summaries of material modifications to the successor plan not incorporated in the most recent summary plan description; and

(iii) A separate statement containing a brief description of the merger, a description of the provisions of, and benefits provided by, the merged and successor plans which are applicable to the participants and beneficiaries of the merged plan; and a notice that copies of the merged and successor plan documents, as well as the plan merger documents (including the portions of any corporate merger documents which describe or control the plan merger), are available for inspection and that copies may be obtained upon written request for a duplication charge (pursuant to § 2520.104b–30); and

(2) After the merger, the plan administrator, in all subsequent summary plan descriptions furnished pursuant to § 2520.104b–2(a)—

(i) Clearly and conspicuously identifies the class of participants and beneficiaries affected by the provisions of the merged plan, and

(ii) States that the documents described in paragraph (b)(1) of this section are available for inspection and that copies may be obtained upon written request for a duplication charge (pursuant to § 2520.104b–30).

[42 FR 37182, July 19, 1977, as amended at 67 FR 776, Jan. 7, 2002]

§§ 2520.104–5—2520.104–6 [Reserved]

§ 2520.104–20 Limited exemption for certain small welfare plans.

(a) *Scope.* Under the authority of section 104(a)(3) of the Act, the administrator of any employee welfare benefit plan which covers fewer than 100 participants at the beginning of the plan year and which meets the requirements of paragraph (b) of this section is exempted from certain reporting and disclosure provisions of the Act. Specifically, the administrator of such plan is not required to file with the Secretary an annual or terminal report. In addition, the administrator of a plan exempted under this section—

(1) Is not required to furnish participants covered under the plan and beneficiaries receiving benefits under the plan with statements of the plan's assets and liabilities and receipts and disbursements and a summary of the annual report required by section 104(b)(3) of the Act;

(2) Is not required to furnish upon written request of any participant or beneficiary a copy of the annual report and any terminal report, as required by section 104(b)(4) of the Act;

(3) Is not required to make copies of the annual report available for examination by any participant or beneficiary in the principal office of the administrator and such other places as may be necessary, as required by section 104(b)(2) of the Act.

(b) *Application.* This exemption applies only to welfare benefit plans—

(1) Which have fewer than 100 participants at the beginning of the plan year;

(2)(i) For which benefits are paid as needed solely from the general assets of the employer or employee organization maintaining the plan, or

(ii) The benefits of which are provided exclusively through insurance contracts or policies issued by an insurance company or similar organization which is qualified to do business in any State or through a qualified health maintenance organization as defined in section 1310(d) of the Public Health Service Act, as amended, 42 U.S.C. 300e–9(d), the premiums for which are paid directly by the employer or employee organization from its general assets or partly from its general assets and partly from contributions by its employees or members, *Provided,* That contributions by participants are forwarded by the employer or employee organization within three months of receipt, or

(iii) Both;

(3) For which, in the case of an insured plan—

(i) Refunds, to which contributing participants are entitled, are returned to them within three months of receipt by the employer or employee organization, and

(ii) Contributing participants are informed upon entry into the plan of the provisions of the plan concerning the allocation of refunds; and

(4) Which are not subject to the Form M–1 requirements under § 2520.101–2 (Filing by Multiple Employer Welfare Arrangements and Certain Other Related Entities).

(c) *Limitations.* This exemption does not exempt the administrator of an employee benefit plan from any other

requirement of title I of the Act, including the provisions which require that plan administrators furnish copies of the summary plan description to participants and beneficiaries (section 104(b)(1)) and furnish certain documents to the Secretary of Labor upon request (section 104(a)(6)), and which authorize the Secretary of Labor to collect information and data from employee benefit plans for research and analysis (section 513).

(d) *Examples*. (1) A welfare plan has 75 participants at the beginning of the plan year and 105 participants at the end of the plan year. Plan benefits are fully insured and premiums are paid directly to the insurance company by the employer pursuant to an insurance contract purchased with premium payments derived half from the general assets of the employer and half from employee contributions (which the employer forwards within three months of receipt). Refunds to the plan are paid to participating employees within three months of receipt as provided in the plan and as described to each participant upon entering the plan. The plan appoints the employer as its plan administrator. The employer, as plan administrator, provides summary plan descriptions to participants and beneficiaries. He also makes copies of certain plan documents available at the plan's principal office and such other places as necessary to give participants reasonable access to them. The exemption provided by § 2520.104–20 applies even though the plan has more than 100 participants by the end of the plan year, because it had fewer than 100 participants at the beginning of the plan year and otherwise satisfied the conditions of the exemption.

(2) A welfare plan is established and maintained in the same way as the plan described in example (1), except that a trade association which sponsors the plan is the holder of the insurance contract. Since the plan still sends the premium payments directly to the insurance company, the exemption applies, as in example (1).

[43 FR 10148, Mar. 10, 1978, as amended at 46 FR 5884, Jan. 21, 1981; 67 FR 776, Jan. 7, 2002; 78 FR 13796, Mar. 1, 2013]

§ 2520.104–21 Limited exemption for certain group insurance arrangements.

(a) *Scope*. Under the authority of section 104(a)(3) of the Act, the administrator of any employee welfare benefit plan which covers fewer than 100 participants at the beginning of the plan year and which meets the requirements of paragraph (b) of this section is exempted from certain reporting and disclosure provisions of the Act. Specifically, the administrator of such plan is not required to file with the Secretary a terminal report or furnish upon written request of any participant or beneficiary a copy of any terminal report as required by section 104(b)(4) of the Act.

(b) *Application*. This exemption applies only to welfare plans, each of which has fewer than 100 participants at the beginning of the plan year and which are part of a group insurance arrangement if such arrangement:

(1) Provides benefits to the employees of two or more unaffiliated employers, but not in connection with a multiemployer plan as defined in section 3(37) of the Act and any regulations prescribed under the Act concerning section 3(37);

(2) Fully insures one or more welfare plans of each participating employer through insurance contracts purchased solely by the employers or purchased partly by the employers and partly by their participating employees, with all benefit payments made by the insurance company: *Provided*, That—

(i) Contributions by participating employees are forwarded by the employers within three months of receipt,

(ii) Refunds, to which contributing participants are entitled, are returned to them within three months of receipt, and

(iii) Contributing participants are informed upon entry into the plan of the provisions of the plan concerning the allocation of refunds; and

(3) Uses a trust (or other entity such as a trade association) as the holder of the insurance contracts and uses a trust as the conduit for payment of premiums to the insurance company.

(c) *Limitations*. This exemption does not exempt the administrator of an employee benefit plan from any other

requirement of title I of the Act, including the provisions which require that plan administrators furnish copies of the summary plan description to participants and beneficiaries (section 104(b)(1)), file an annual report with the Secretary of Labor (section 104(a)(1)) and furnish certain documents to the Secretary of Labor upon request (section 104(a)(6)), and authorize the Secretary of Labor to collect information and data from employee benefit plans for research and analysis (section 513).

(d) *Examples.* (1) A welfare plan has 25 participants at the beginning of the plan year. It is part of a group insurance arrangement of a trade association which provides benefits to employees of two or more unaffiliated employers, but not in connection with a multiemployer plan as defined in the Act. Plan benefits are fully insured pursuant to insurance contracts purchased with premium payments derived half from employee contributions (which the employer forwards within three months of receipt) and half from the general assets of each participating employer. Refunds to the plan are paid to participating employees within three months of receipt as provided in the plan and as described to each participant upon entering the plan. The trade association holds the insurance contracts. A trust acts as a conduit for payments, receiving premium payments from participating employers and paying the insurance company. The plan appoints the trade association as its plan administrator. The association, as plan administrator, provides summary plan descriptions to participants and beneficiaries, enlisting the help of participating employers in carrying out this distribution. The plan administrator also makes copies of certain plan documents available to the plan's principal office and such other places as necessary to give participants reasonable access to them. The plan administrator files with the Secretary an annual report covering activities of the plan, as required by the Act and such regulations as the Secretary may issue. The exemption provided by this section applies because the conditions of paragraph (b) have been satisfied.

(2) Assume the same facts as paragraph (d)(1) of this section except that the premium payments for the insurance company are paid from the trust to an independent insurance brokerage firm acting as the agent of the insurance company. The trade association is the holder of the insurance contract. The plan appoints an officer of the participating employer as the plan administrator. The officer, as plan administrator, performs the same reporting and disclosure functions as the administrator in paragraph (d)(1) of this section, enlisting the help of the association in providing summary plan descriptions and necessary information. The exemption provided by this section applies.

(3) The facts are the same as paragraph (d)(1) of this section except the welfare plan has 125 participants at the beginning of the plan year. The exemption provided by this section does not apply because the plan had 100 or more participants at the beginning of the plan year. See, however, § 2520.104–43.

(4) The facts are the same as paragraph (d)(2) of this section except the welfare plan has 125 participants. The exemption provided by this section does not apply because the plan had 100 or more participants at the beginning of the plan year. See, however, § 2520.104–43.

(e) *Applicability date.* For purposes of paragraph (b)(3) of this section, the arrangement may continue to use an entity (such as a trade association) as the conduit for the payment of insurance premiums to the insurance company for reporting years of the arrangement beginning before January 1, 2001.

[43 FR 10149, Mar. 10, 1978, as amended at 65 FR 21084, Apr. 19, 2000; 67 FR 776, Jan. 7, 2002]

§ 2520.104–22 Exemption from reporting and disclosure requirements for apprenticeship and training plans.

(a) An employee welfare benefit plan that provides exclusively apprenticeship training benefits or other training benefits or that provides exclusively apprenticeship and training benefits shall not be required to meet any requirement of part 1 of the Act, provided that the administrator of such plan:

(1) Has filed with the Secretary the notice described in paragraph (b) of this section;

(2) Takes steps reasonably designed to ensure that the information required to be contained in such notice is disclosed to employees of employers contributing to the plan who may be eligible to enroll in any course of study sponsored or established by the plan; and

(3) Makes such notice available to such employees upon request.

(b) The notice referred to in paragraph (a) of this section shall contain accurate information concerning:

(1) The name of the plan;

(2) The Employer Identification Number (EIN) of the plan sponsor;

(3) The name of the plan administrator;

(4) The name and location of an office or person from whom an interested individual can obtain:

(i) A description of any existing or anticipated future course of study sponsored or established by the plan, including any prerequisites for enrolling in such course; and

(ii) A description of the procedure by which to enroll in such course.

(c) *Filing address.* The notice referred to in paragraph (a) of this section shall be filed with the Secretary of Labor by mailing it to: Apprenticeship and Training Plan Exemption, Employee Benefits Security Administration, Room N–1513, U.S. Department of Labor, 200 Constitution Avenue NW., Washington, DC 20210, or by delivering it during normal working hours to the Employee Benefits Security Administration, Room N–1513, U.S. Department of Labor, 200 Constitution Avenue NW., Washington, DC.

[45 FR 15529, Mar. 11, 1980, as amended at 45 FR 27933, Apr. 25, 1980; 54 FR 8629, Mar. 1, 1989; 68 FR 16400, Apr. 3, 2003]

§ 2520.104–23 Alternative method of compliance for pension plans for certain selected employees.

(a) *Purpose and scope.* (1) This section contains an alternative method of compliance with the reporting and disclosure requirements of part 1 of title I of the Employee Retirement Income Security Act of 1974 for unfunded or insured pension plans maintained by an employer for a select group of management or highly compensated employees, pursuant to the authority of the Secretary of Labor under section 110 of the Act (88 Stat. 851).

(2) Under section 110 of the Act, the Secretary is authorized to prescribe an alternative method for satisfying any requirement of part 1 of title I of the Act with respect to any pension plans, or class of pension plans, subject to such requirement.

(b) *Filing obligation.* Under the authority of section 110 of the Act, an alternative form of compliance with the reporting and disclosure requirements of part 1 of the Act is provided for certain pension plans for a select group of management or highly compensated employees. The administrator of a pension plan described in paragraph (d) shall be deemed to satisfy the reporting and disclosure provisions of part 1 of title I of the Act by—

(1) Filing a statement with the Secretary of Labor that includes the name and address of the employer, the employer identification number (EIN) assigned by the Internal Revenue Service, a declaration that the employer maintains a plan or plans primarily for the purpose of providing deferred compensation for a select group of management or highly compensated employees, and a statement of the number of such plans and the number of employees in each, and

(2) Providing plan documents, if any, to the Secretary upon request as required by section 104(a)(6) of the Act. Only one statement need be filed for each employer maintaining one or more of the plans described in paragraph (d) of this section. For plans in existence on May 4, 1975, the statement shall be filed on or before August 31, 1975. For a plan to which part 1 of title I of the Act becomes applicable after May 4, 1975, the statement shall be filed within 120 days after the plan becomes subject to part 1.

(c) *Filing address.* Statements may be filed with the Secretary of Labor by mailing them addressed to: Top Hat Plan Exemption, Employee Benefits Security Administration, Room N–1513, U.S. Department of Labor, 200 Constitution Avenue NW., Washington, DC 20210, or by delivering it during normal working hours to the Employee Benefits Security Administration, Room N–1513, U.S. Department of Labor, 200

Constitution Avenue NW., Washington, DC.

(d) *Application*. The alternative form of compliance described in paragraph (b) of this section is available only to employee pension benefit plans—

(1) Which are maintained by an employer primarily for the purpose of providing deferred compensation for a select group of management or highly compensated employees, and

(2) For which benefits (i) are paid as needed solely from the general assets of the employer, (ii) are provided exclusively through insurance contracts or policies, the premiums for which are paid directly by the employer from its general assets, issued by an insurance company or similar organization which is qualified to do business in any State, or (iii) both.

[40 FR 34533, Aug. 15, 1975, as amended at 54 FR 8629, Mar. 1, 1989; 67 FR 776, Jan. 7, 2002; 68 FR 16400, Apr. 3, 2003]

§ 2520.104–24 Exemption for welfare plans for certain selected employees.

(a) *Purpose and scope*. (1) This section, under the authority of section 104(a)(3) of the Employee Retirement Income Security Act of 1974, exempts unfunded or insured welfare plans maintained by an employer for the purpose of providing benefits for a select group of management or highly compensated employees from the reporting and disclosure provisions of part 1 of title I of the Act, except for the requirement to provide plan documents to the Secretary of Labor upon request under section 104(a)(1) of the Act.

(2) Under section 104(a)(3) of the Act, the Secretary is authorized to exempt by regulation any welfare benefit plan from all or part of the reporting and disclosure requirements of title I of the Act.

(b) *Exemption*. Under the authority of section 104(a)(3) of the Act, each employee welfare benefit plan described in paragraph (c) of this section is exempted from the reporting and disclosure provisions of part 1 of title I of the Act, except for providing plan documents to the Secretary of Labor upon request as required by section 104(a)(6).

(c) *Application*. This exemption is available only to employee welfare benefit plans:

(1) Which are maintained by an employer primarily for the purpose of providing benefits for a select group of management or highly compensated employees, and

(2) For which benefits (i) are paid as needed solely from the general assets of the employer, (ii) are provided exclusively through insurance contracts or policies, the premiums for which are paid directly by the employer from its general assets, issued by an insurance company or similar organization which is qualified to do business in any State, or (iii) both.

[40 FR 34533, Aug. 15, 1975, as amended at 67 FR 776, Jan. 7, 2002]

§ 2520.104–25 Exemption from reporting and disclosure for day care centers.

Under the authority of section 104(a)(3) of the Act, day care centers are exempted from the reporting and disclosure provisions of part 1 of title I of the Act, except for providing plan documents to the Secretary upon request as required under section 104(a)(6) of the Act.

[40 FR 34533, Aug. 15, 1975, as amended at 67 FR 776, Jan. 7, 2002]

§ 2520.104–26 Limited exemption for certain unfunded dues financed welfare plans maintained by employee organizations.

(a) *Scope*. Under the authority of section 104(a)(3) of the Act, a welfare benefit plan that meets the requirements of paragraph (b) of this section is exempted from the provisions of the Act that require filing with the Secretary an annual report and furnishing a summary annual report to participants and beneficiaries. Such plans may use a simplified method of reporting and disclosure to comply with the requirement to furnish a summary plan description to participants and beneficiaries, as follows:

(1) In lieu of filing an annual report with the Secretary or distributing a summary annual report, a filing is made of Report Form LM–2 or LM–3, pursuant to the Labor-Management Reporting and Disclosure Act

(LMRDA) and regulations thereunder, and

(2) In lieu of a summary plan description, the employee organization constitution or by-laws may be furnished in accordance with § 2520.104b–2 to participants and beneficiaries together with any supplement to such document necessary to meet the requirements of §§ 2520.102–2 and 2520.102–3.

(b) *Application*. This exemption is available only to welfare benefit plans maintained by an employee organization, as that term is defined in section 3(4) of the Act, paid for out of the employee organization's general assets, which are derived wholly or partly from membership dues, and which cover employee organization members and their beneficiaries.

(c) *Limitations*. This exemption does not exempt the administrator from any other requirement of part 1 of title I of the Act.

[42 FR 37184, July 19, 1977, as amended at 67 FR 776, Jan. 7, 2002]

§ 2520.104–27 Alternative method of compliance for certain unfunded dues financed pension plans maintained by employee organizations.

(a) *Scope*. Under the authority of section 110 of the Act, a pension benefit plan that meets the requirements of paragraph (b) of this section is exempted from the provisions of the Act that require filing with the Secretary an annual report and furnishing a summary annual report to participants and beneficiaries receiving benefits. Such plans may use a simplified method of reporting and disclosure to comply with the requirement to furnish a summary plan description to participants and beneficiaries receiving benefits, as follows:

(1) In lieu of filing an annual report with the Secretary or distributing a summary annual report, a filing is made of Report Form LM–2 or LM–3, pursuant to the Labor-Management Reporting and Disclosure Act (LMRDA) and regulations thereunder, and

(2) In lieu of a summary plan description, the employee organization constitution or bylaws may be furnished in accordance with § 2520.104b–2 to participants and beneficiaries together with any supplement to such document necessary to meet the requirements of §§ 2520.102–2 and 2520.102–3.

(b) *Application*. This exemption is available only to pension benefit plans maintained by an employee organization, as that term is defined in section 3(4) of the Act, paid for out of the employee organization's general assets, which are derived wholly or partly from membership dues, and which cover employee organization members and their beneficiaries.

(c) *Limitations*. This exemption does not exempt the administrator from any other requirement of part 1 of title I of the Act.

[42 FR 37184, July 19, 1977, as amended at 67 FR 777, Jan. 7, 2002]

§ 2520.104–28 [Reserved]

§ 2520.104–41 Simplified annual reporting requirements for plans with fewer than 100 participants.

(a) *General*. (1) Under the authority of section 104(a)(2)(A), the Secretary of Labor may prescribe simplified annual reporting for employee pension benefit plans with fewer than 100 participants.

(2) Under the authority of section 104(a)(3), the Secretary of Labor may provide a limited exemption for any employee welfare benefit plan with respect to certain annual reporting requirements.

(b) *Application*. The administrator of an employee pension or welfare benefit plan which covers fewer than 100 participants at the beginning of the plan year and the administrator of an employee pension or welfare benefit plan described in § 2520.103–1(d) may file the simplified annual report described in paragraph (c) of this section in lieu of the annual report described in § 2520.103–1(b).

(c) *Contents*. The administrator of an employee pension or welfare benefit plan described in paragraph (b) of this section shall file, in the manner described in § 2520.104a–5, a completed Form 5500 ''Annual Return/Report of Employee Benefit Plan'' including, if applicable, the information described in § 2520.103–1(f) or, to the extent eligible, a completed Form 5500–SF ''Short Form Annual Return/Report of Small

Employee Benefit Plan,'' and any required schedules or statements prescribed by the instructions to the applicable form, and, unless waived by § 2520.104–44 or § 2520.104–46, a report of an independent qualified public accountant meeting the requirements of § 2520.103–1(b).

[43 FR 10150, Mar. 10, 1978, as amended at 45 FR 51446, Aug. 1, 1980; 54 FR 8629, Mar. 1, 1989; 65 FR 21084, Apr. 19, 2000; 65 FR 62973, Oct. 19, 2000; 78 FR 13796, Mar. 1, 2013]

§ 2520.104–42 Waiver of certain actuarial information in the annual report.

Under the authority of section 104(a)(2)(A) of ERISA, the requirement of section 103(d)(6) of ERISA that the annual report include as part of the actuarial statement (Schedule B)[1] the present value of all of the plan's liabilities for nonforfeitable pension benefits allocated by termination priority categories, as set forth in section 4044 of title IV of ERISA, and the actuarial assumptions used in these computations, is waived.

[44 FR 5446, Jan. 26, 1979]

§ 2520.104–43 Exemption from annual reporting requirement for certain group insurance arrangements.

(a) *General.* Under the authority of section 104(a)(3) of the Act, the administrator of an employee welfare benefit plan which meets the requirements of paragraph (b) of this section is not required to file an annual report with the Secretary of Labor as required by section 104(a)(1) of the Act.

(b) *Application.* (1) This exemption applies only to a welfare plan for a plan year in which (i) such plan meets the requirements of § 2520.104–21, except the requirement that the plan cover fewer than 100 participants at the beginning of the plan year, and

(ii) An annual report containing the items set forth in § 2520.103–2 has been filed with the Secretary of Labor in accordance with § 2520.104a–6 by the trust or other entity which is the holder of the group insurance contracts by which plan benefits are provided.

(2) For purposes of this section, the terms ''group insurance arrangement'' or ''trust or other entity'' shall be used in place of the terms ''plan'' and ''plan administrator,'' as applicable, in §§ 2520.103–3, 2520.103–4, 2520.103–6, 2520.103–8, 2520.103–9 and 2520.103–10.

(c) *Limitation.* This provision does not exempt the administrator of an employee benefit plan which meets the requirements of paragraph (b) from furnishing a copy of a summary annual report to participants and beneficiaries of the plan, as required by section 104(b)(3) of the Act.

[43 FR 10150, Mar. 10, 1978, as amended at 65 FR 21084, Apr. 19, 2000; 67 FR 777, Jan. 7, 2002]

§ 2520.104–44 Limited exemption and alternative method of compliance for annual reporting by unfunded plans and by certain insured plans.

(a) *General.* (1) Under the authority of section 104(a)(3) of the Act, the Secretary of Labor may exempt an employee welfare benefit plan from any or all of the reporting and disclosure requirements of title I. An employee welfare benefit plan which meets the requirements of paragraph (b)(1) of this section is not required to comply with the annual reporting requirements described in paragraph (c) of this section.

(2) Under the authority of section 110 of the Act, an alternative method of compliance is prescribed for certain employee pension benefit plans subject to part 1, title I of the Act. An employee pension benefit plan which meets the requirements of paragraph (b)(2) or (b)(3) of this section is not required to comply with the annual reporting requirements described in paragraph (c) of this section.

(b) *Application.* This section applies only to:

(1) An employee welfare benefit plan under the terms of which benefits are to be paid—

(i) Solely from the general assets of the employer or employee organization maintaining the plan;

(ii) The benefits of which are provided exclusively through insurance contracts or policies issued by an insurance company or similar organization which is qualified to do business in any State or through a qualified health maintenance organization as defined in

[1] Schedule B was filed as part of the original document.

section 1310(d) of the Public Health Service Act, as amended, 42 U.S.C. 300e–9(d), the premiums for which are paid directly by the employer or employee organization from its general assets or partly from its general assets and partly from contributions by its employees or members, provided that any plan assets held by such an insurance company are held solely in the general account of such company or organization, contributions by participants are forwarded by the employer or employee organization within three months of receipt and, in the case of a plan that provides for the return of refunds to contributing participants, such refunds are returned to them within three months of receipt by the employer or employee organization, or

(iii) Partly in the manner specified in paragraph (b)(1)(i) of this section and partly in the manner specified in paragraph (b)(1)(ii) of this section; and

(2) A pension benefit plan the benefits of which are provided exclusively through allocated insurance contracts or policies which are issued by, and pursuant to the specific terms of such contracts or policies benefit payments are fully guaranteed by an insurance company or similar organization which is qualified to do business in any State, and the premiums for which are paid directly by the employer or employee organization from its general assets or partly from its general assets and partly from contributions by its employees or members: *Provided,* That contributions by participants are forwarded by the employer or employee organization to the insurance company or organization within three months of receipt and, in the case of a plan that provides for the return of refunds to contributing participants, such refunds are returned to them within three months of receipt by the employer or employee organization.

(c) *Contents.* An employee benefit plan described in paragraph (b) of this section is exempt from complying with the following annual reporting requirements:

(1) Completing certain items of the annual report relating to financial information and transactions entered into by the plan as described in the instructions to the Form 5500 ''Annual Return/Report of Employee Benefit Plan'' and accompanying schedules;

(2) Engaging an independent qualified public accountant pursuant to section 103(a)(3)(A) of the Act and § 2520.103–1(b) to conduct an examination of the financial statements and schedules of the plan; and

(3) Including in the annual report a report of an independent qualified public accountant concerning the financial statements and schedules required to be a part of the annual report pursuant to section 103(b) of the Act and § 2520.103–1(b).

(d) *Limitation.* This section does not exempt any plan from filing an annual report form with the Secretary in accordance with section 104(a)(1) of the Act and § 2520.104a–5.

(e) *Example.* A welfare plan which is funded entirely with insurance contracts and which meets all the requirements of exemption under § 2520.104–20 except that it covers 100 or more participants at the beginning of the plan year is not exempt from the annual reporting requirements under § 2520.104–20, but is exempt from certain reporting requirements under § 2520.104–44. Under the latter section, such a welfare plan should file Form 5500, including Schedule A ''Insurance Information.'' However, the plan is not required to engage an independent qualified public accountant and need not complete certain items on form 5500.

[43 FR 10150, Mar. 10, 1978, as amended at 45 FR 51446, Aug. 1, 1980; 46 FR 5884, Jan. 21, 1981; 65 FR 21085, Apr. 19, 2000; 67 FR 777, Jan. 7, 2002; 72 FR 64728, Nov. 16, 2007]

§ 2520.104–45 [Reserved]

§ 2520.104–46 Waiver of examination and report of an independent qualified public accountant for employee benefit plans with fewer than 100 participants.

(a) *General.* (1) Under the authority of section 103(a)(3)(A) of the Act, the Secretary may waive the requirements of section 103(a)(3)(A) in the case of a plan for which simplified annual reporting has been prescribed in accordance with section 104(a)(2) of the Act.

(2) Under the authority of section 104(a)(3) of the Act the Secretary may exempt any employee welfare benefit

plan from certain annual reporting requirements.

(b) *Application*. (1)(i) The administrator of an employee pension benefit plan for which simplified annual reporting has been prescribed in accordance with section 104(a)(2)(A) of the Act and § 2520.104–41 is not required to comply with the annual reporting requirements described in paragraph (c) of this section, provided that with respect to each plan year for which the waiver is claimed—

(A)(*1*) At least 95 percent of the assets of the plan constitute qualifying plan assets within the meaning of paragraph (b)(1)(ii) of this section, or

(*2*) Any person who handles assets of the plan that do not constitute qualifying plan assets is bonded in accordance with the requirements of section 412 of the Act and the regulations issued thereunder, except that the amount of the bond shall not be less than the value of such assets;

(B) The summary annual report, described in § 2520.104b–10, includes, in addition to any other required information:

(*1*) Except for qualifying plan assets described in paragraph (b)(1)(ii)(A), (B) and (F) of this section, the name of each regulated financial institution holding (or issuing) qualifying plan assets and the amount of such assets reported by the institution as of the end of the plan year;

(*2*) The name of the surety company issuing the bond, if the plan has more than 5% of its assets in non-qualifying plan assets;

(*3*) A notice indicating that participants and beneficiaries may, upon request and without charge, examine, or receive copies of, evidence of the required bond and statements received from the regulated financial institutions describing the qualifying plan assets; and

(*4*) A notice stating that participants and beneficiaries should contact the Regional Office of the U.S. Department of Labor's Employee Benefits Security Administration if they are unable to examine or obtain copies of the regulated financial institution statements or evidence of the required bond, if applicable; and

(C) in response to a request from any participant or beneficiary, the administrator, without charge to the participant or beneficiary, makes available for examination, or upon request furnishes copies of, each regulated financial institution statement and evidence of any bond required by paragraph (b)(1)(i)(A)(*2*).

(ii) For purposes of paragraph (b)(1), the term ''qualifying plan assets'' means:

(A) Qualifying employer securities, as defined in section 407(d)(5) of the Act and the regulations issued thereunder;

(B) Any loan meeting the requirements of section 408(b)(1) of the Act and the regulations issued thereunder;

(C) Any assets held by any of the following institutions:

(*1*) A bank or similar financial institution as defined in § 2550.408b–4(c);

(*2*) An insurance company qualified to do business under the laws of a state;

(*3*) An organization registered as a broker-dealer under the Securities Exchange Act of 1934; or

(*4*) Any other organization authorized to act as a trustee for individual retirement accounts under section 408 of the Internal Revenue Code.

(D) Shares issued by an investment company registered under the Investment Company Act of 1940;

(E) Investment and annuity contracts issued by any insurance company qualified to do business under the laws of a state; and,

(F) In the case of an individual account plan, any assets in the individual account of a participant or beneficiary over which the participant or beneficiary has the opportunity to exercise control and with respect to which the participant or beneficiary is furnished, at least annually, a statement from a regulated financial institution referred to in paragraphs (b)(1)(ii)(C), (D) or (E) of this section describing the assets held (or issued) by such institution and the amount of such assets.

(iii)(A) For purposes of this paragraph (b)(1), the determination of the percentage of all plan assets consisting of qualifying plan assets with respect to a given plan year shall be made in the same manner as the amount of the

bond is determined pursuant to §§ 2580.412–11, 2580.412–14, and 2580.412–15.

(B) *Examples.* Plan A, which reports on a calendar year basis, has total assets of $600,000 as of the end of the 1999 plan year. Plan A's assets, as of the end of year, include: investments in various bank, insurance company and mutual fund products of $520,000; investments in qualifying employer securities of $40,000; participant loans, meeting the requirements of ERISA section 408(b)(1), totaling $20,000; and a $20,000 investment in a real estate limited partnership. Because the only asset of the plan that does not constitute a ''qualifying plan asset'' is the $20,000 real estate investment and that investment represents less than 5% of the plan's total assets, no bond would be required under the proposal as a condition for the waiver for the 2000 plan year. By contrast, Plan B also has total assets of $600,000 as of the end of the 1999 plan year, of which $558,000 constitutes ''qualifying plan assets'' and $42,000 constitutes non-qualifying plan assets. Because 7%—more than 5%—of Plan B's assets do not constitute ''qualifying plan assets,'' Plan B, as a condition to electing the waiver for the 2000 plan year, must ensure that it has a fidelity bond in an amount equal to at least $42,000 covering persons handling non-qualifying plan assets. Inasmuch as compliance with section 412 requires the amount of bonds to be not less than 10% of the amount of all the plan's funds or other property handled, the bond acquired for section 412 purposes may be adequate to cover the non-qualifying plan assets without an increase (*i.e.*, if the amount of the bond determined to be needed for the relevant persons for section 412 purposes is at least $42,000). As demonstrated by the foregoing example, where a plan has more than 5% of its assets in non-qualifying plan assets, the bond required by the proposal is for the total amount of the non-qualifying plan assets, not just the amount in excess of 5%.

(2) The administrator of an employee welfare benefit plan that covers fewer than 100 participants at the beginning of the plan year is not required to comply with annual reporting requirements described in paragraph (c) of this section.

(c) *Waiver.* The administrator of a plan described in paragraph (b)(1) or (2) of this section is not required to:

(1) Engage an independent qualified public accountant to conduct an examination of the financial statements of the plan;

(2) Include within the annual report the financial statements and schedules prescribed in section 103(b) of the Act and §§ 2520.103–1, 2520.103–2, and 2520.103–10; and

(3) Include within the annual report a report of an independent qualified public accountant as prescribed in section 103(a)(3)(A) of the Act and § 2520.103–1.

(d) *Limitations.* (1) The waiver described in this section does not affect the obligation of a plan described in paragraph (b) (1) or (2) of this section to file a Form 5500 ''Annual Return/Report of Employee Benefit Plan,'' including any required schedules or statements prescribed by the instructions to the form. See § 2520.104–41.

(2) For purposes of this section, an employee pension benefit plan for which simplified annual reporting has been prescribed includes an employee pension benefit plan which elects to file a Form 5500 as a small plan pursuant to § 2520.103–1(d) with respect to the plan year for which the waiver is claimed. See § 2520.104–41.

(3) For purposes of this section, an employee welfare benefit plan that covers fewer than 100 participants at the beginning of the plan year includes an employee welfare benefit plan which elects to file a Form 5500 as a small plan pursuant to § 2520.103–1(d) with respect to the plan year for which the waiver is claimed. See § 2520.104–41.

(4) A plan that elects to file a Form 5500 as a large plan pursuant to § 2520.103–1(d) may not claim a waiver under this section.

(e) *Model notice.* The appendix to this section contains model language for inclusion in the summary annual report to assist plan administrators in complying with the requirements of paragraph (b)(1)(i)(B) of this section to avail themselves of the waiver of examination and report of the independent qualified public accountant for employee benefit plans with fewer than

100 participants. Use of the model language is not mandatory. In order to use the model language in the plan's summary annual report, administrators must, in addition to any other information required to be in the summary annual report, select among alternative language and add relevant information where appropriate in the model language. Items of information that are not applicable to a particular plan may be deleted. Use of the model language, appropriately modified and supplemented, will be deemed to satisfy the notice content requirements of paragraph (b)(1)(i)(B) of this section.

APPENDIX TO § 2520.104–46—MODEL SUMMARY ANNUAL REPORT NOTICE (PLAN ADMINISTRATORS WILL NEED TO MODIFY THE MODEL TO OMIT INFORMATION THAT IS NOT APPLICABLE TO THE PLAN)

The U.S. Department of Labor's regulations require that an independent qualified public accountant audit the plan's financial statements unless certain conditions are met for the audit requirement to be waived. This plan met the audit waiver conditions for the plan year beginning (insert year) and therefore has not had an audit performed. Instead, the following information is provided to assist you in verifying that the assets reported on the (Form 5500 or Form 5500-SF—select as applicable) were actually held by the plan.

At the end of the (insert year) plan year, the plan had (include separate entries for each regulated financial institution holding or issuing qualifying plan assets):

[Set forth amounts and names of institutions as applicable where indicated], [(insert $ amount) in assets held by (insert name of bank)], [(insert $ amount) in securities held by (insert name of registered broker-dealer)], [(insert $ amount) in shares issued by (insert name of registered investment company)], [(insert $ amount) in investment or annuity contract issued by (insert name of insurance company)].

The plan receives year-end statements from these regulated financial institutions that confirm the above information. [Insert as applicable—The remainder of the plan's assets were (1) qualifying employer securities, (2) loans to participants, (3) held in individual participant accounts with investments directed by participants and beneficiaries and with account statements from regulated financial institutions furnished to the participant or beneficiary at least annually, or (4) other assets covered by a fidelity bond at least equal to the value of the assets and issued by an approved surety company.]

Plan participants and beneficiaries have a right, on request and free of charge, to get copies of the financial institution year-end statements and evidence of the fidelity bond. If you want to examine or get copies of the financial institution year-end statements or evidence of the fidelity bond, please contact [insert mailing address and any other available way to request copies such as e-mail and phone number].

If you are unable to obtain or examine copies of the regulated financial institution statements or evidence of the fidelity bond, you may contact the regional office of the U.S. Department of Labor's Employee Benefits Security Administration (EBSA) for assistance by calling toll-free 1.866.444.EBSA (3272). A listing of EBSA regional offices can be found at *http://www.dol.gov/ebsa*.

General information regarding the audit waiver conditions applicable to the plan can be found on the U.S. Department of Labor Web site at *http://www.dol.gov/ebsa* under the heading ''Frequently Asked Questions.''

[43 FR 10151, Mar. 10, 1978, as amended at 43 FR 14010, Apr. 4, 1978; 45 FR 51447, Aug. 1, 1980; 54 FR 8629, Mar. 1, 1989; 65 FR 21085, Apr. 19, 2000; 65 FR 62973, Oct. 19, 2000; 72 FR 64728, Nov. 16, 2007]

§ 2520.104–47 Limited exemption and alternative method of compliance for filing of insurance company financial reports.

An administrator of an employee benefit plan to which section 103(e)(2) of the Act applies shall be deemed in compliance with the requirement to include with its annual report a copy of the financial report of the insurance company, insurance service or similar organization, provided that the administrator files a copy of such report within 45 days of receipt of a written request for such report by the Secretary of Labor.

[45 FR 14034, Mar. 4, 1980]

§ 2520.104–48 Alternative method of compliance for model simplified employee pensions—IRS Form 5305–SEP.

Under the authority of section 110 of the Act the provisions of this section are prescribed as an alternative method of compliance with the reporting and disclosure requirements set forth in part 1 of title I of the Employee Retirement Income Security Act of 1974 in the case of a simplified employee pension (SEP) described in section 408(k) of the Internal Revenue Code of

1954 as amended (the Code) that is created by use without modification of Internal Revenue Service (IRS) Form *5305–SEP*.

(a) At the time an employee becomes eligible to participate in the SEP (whether at the creation of the SEP or thereafter), the administrator of the SEP (generally the employer establishing and maintaining the SEP) shall furnish the employee with a copy of the completed and unmodified IRS Form *5305–SEP* used to create the SEP, including (1) the completed Contribution Agreement, (2) the General Information and Guidelines, and (3) the Questions and Answers.

(b) Following the end of each calendar year the administrator of the SEP shall notify each participant in the SEP in writing of any employer contributions made under the Contribution Agreement to the participant's individual retirement account or individual retirement annuity (IRA) for that year.

(c) If the employer establishing and maintaining the SEP selects, recommends, or in any other way influences employees to choose a particular IRA or type of IRA into which contributions under the SEP will be made, and if that IRA is subject to restrictions on a participant's ability to withdraw funds (other than restrictions imposed by the Code that apply to all IRAs), the administrator of the SEP shall give to each employee, in writing, within 90 days of the adoption of this regulation or at the time such employee becomes eligible to participate in the SEP, whichever is later, a clear explanation of those restrictions and a statement to the effect that other IRAs, into which rollovers or employee contributions may be made, may not be subject to such restrictions.

[45 FR 24869, Apr. 11, 1980]

§ 2520.104–49 Alternative method of compliance for certain simplified employee pensions.

Under the authority of section 110 of the Act, the provisions of this section are prescribed as an alternative method of compliance with the reporting and disclosure requirements set forth in part 1 of title I of the Act for a simplified employee pension (SEP) described in section 408(k) of the Internal Revenue Code of 1954 as amended, except for:

A SEP that is created by proper use of Internal Revenue Service Form *5305–SEP*, or; a SEP in connection with which the employer who establishes or maintains the SEP selects, recommends or influences its employees to choose the IRAs into which employer contributions will be made and those IRAs are subject to provisions that prohibit withdrawal of funds by participants for any period of time.

(a) At the time an employee becomes eligible to participate in the SEP (whether at the creation of the SEP or thereafter) or up to 90 days after the effective date of this regulation, whichever is later, the administrator of the SEP (generally the employer establishing or maintaining the SEP) shall furnish the employee in writing with:

(1) Specific information concerning the SEP, including:

(i) The requirements for employee participation in the SEP,

(ii) The formula to be used to allocate employer contributions made under the SEP to each participant's individual retirement account or annuity (IRA),

(iii) The name or title of the individual who is designated by the employer to provide additional information to participants concerning the SEP, and

(iv) If the employer who establishes or maintains the SEP selects, recommends or substantially influences its employees to choose the IRAs into which employer contributions under the SEP will be made, a clear explanation of the terms of those IRAs, such as the rate(s) of return and any restrictions on a participant's ability to roll over or withdraw funds from the IRAs, including restrictions that allow rollovers or withdrawals but reduce earnings of the IRAs or impose other penalties.

(2) General information concerning SEPs and IRAs, including a clear explanation of:

(i) What a SEP is and how it operates,

(ii) The statutory provisions prohibiting discrimination in favor of highly compensated employees,

(iii) A participant's right to receive contributions under a SEP-and the allowable sources of contributions to a SEP-related IRA (SEP-IRA),

(iv) The statutory limits on contributions to SEP-IRAs,

(v) The consequences of excess contributions to a SEP-IRA and how to avoid excess contributions,

(vi) A participant's rights with respect to contributions made under a SEP to his or her IRA(s),

(vii) How a participant must treat contributions to a SEP-IRA for tax purposes,

(viii) The statutory provisions concerning withdrawal of funds from a SEP-IRA and the consequences of a premature withdrawal, and

(ix) A participant's ability to roll over or transfer funds from a SEP-IRA to another IRA, SEP-IRA, or retirement bond, and how such a rollover or transfer may be effected without causing adverse tax consequences.

(3) A statement to the effect that:

(i) IRAs other than the IRA(s) into which employer contributions will be made under the SEP may provide different rates of return and may have different terms concerning, among other things, transfers and withdrawals of funds from the IRA(s),

(ii) In the event a participant is entitled to make a contribution or rollover to an IRA, such contribution or rollover can be made to an IRA other than the one into which employer contributions under the SEP are to be made, and

(iii) Depending on the terms of the IRA into which employer contributions are made, a participant may be able to make rollovers or transfers of funds from that IRA to another IRA.

(4) A description of the disclosure required by the Internal Revenue Service to be made to individuals for whose benefit an IRA is established by the financial institution or other person who sponsors the IRA(s) into which contributions will be made under the SEP.

(5) A statement that, in addition to the information provided to an employee at the time he or she becomes eligible to participate in a SEP, the administrator of the SEP must furnish each participant:

(i) Within 30 days of the effective date of any amendment to the terms of the SEP, a copy of the amendment and a clear written explanation of its effects, and

(ii) No later than the later of:

(A) January 31 of the year following the year for which a contribution is made,

(B) 30 days after a contribution is made, or

(C) 30 days after the effective date of this regulation

written notification of any employer contributions made under the SEP to that participant's IRA(s).

(6) In the case of a SEP that provides for integration with Social Security

(i) A statement that Social Security taxes paid by the employer on account of a participant will be considered as an employer contribution under the SEP to a participant's SEP-IRA for purposes of determining the amount contributed to the SEP-IRA(s) of a participant by the employer pursuant to the allocation formula,

(ii) A description of the effect that integration with Social Security would have on employer contributions under a SEP, and

(iii) The integration formula, which may constitute part of the allocation formula required by paragraph (a)(1)(ii) of this section.

(b)(1) The requirements of paragraphs (a)(1)(i), (ii), (iii) and (a)(6)(i) of this regulation may be met by furnishing the SEP agreement to participants, provided that the SEP agreement is written in a manner reasonably calculated to be understood by the average plan participant.

(2) The requirements of paragraph (a)(1)(iv) of this regulation may be met through disclosure materials furnished by the financial institution in which the participant's IRA is maintained, provided the materials contain the information specified in such paragraph.

(c) No later than the later of:

(1) January 31 of the year following the year for which a contribution is made,

(2) 30 days after a contribution is made, or

(3) 30 days after the effective date of this regulation

the administrator of the SEP shall notify a participant in the SEP in writing of any employer contributions made under the SEP to the participant's IRA(s).

(d) Within 30 days of the effective date of any amendment to the terms of the SEP, the administrator shall furnish each participant a copy of the amendment and a clear explanation in writing of its effect.

[46 FR 1264, Jan. 6, 1981]

§ 2520.104–50 Short plan years, deferral of accountant's examination and report.

(a) *Definition of ''short plan year.''* For purposes of this section, a short plan year is a plan year, as defined in section 3(39) of the Act, of seven or fewer months' duration, which occurs in the event that:

(1) A plan is established or commences operations;

(2) A plan is merged or consolidated with another plan or plans;

(3) A plan is terminated; or

(4) The annual date on which the plan year begins is changed.

(b) *Deferral of accountant's report.* A plan administrator is not required to include the report of an independent qualified public accountant in the annual report for the first of two consecutive plan years, one of which is a short plan year, provided that the following conditions are satisfied:

(1) The annual report for the first of the two consecutive plan years shall include:

(i) Financial statements and accompanying schedules prepared in conformity with the requirements of section 103(b) of the Act and regulations promulgated thereunder;

(ii) An explanation why one of the two plan years is of seven or fewer months' duration; and

(iii) A statement that the annual report for the immediately following plan year will include a report of an independent qualified public accountant with respect to the financial statements and accompanying schedules for both of the two plan years.

(2) The annual report for the second of the two consecutive plan years shall include:

(i) Financial statements and accompanying schedules prepared in conformity with section 103(b) of the Act and regulations promulgated thereunder with respect to both plan years;

(ii) A report of an independent qualified public accountant with respect to the financial statements and accompanying schedules for both plan years; and

(iii) A statement identifying any material differences between the unaudited financial information relating to, and contained in the annual report for, the first of the two consecutive plan years and the audited financial information relating to that plan year contained in the annual report for the immediately following plan year.

(c) *Accountant's examination and report.* The examination by the accountant which serves as the basis for the portion of his report relating to the first of the two consecutive plan years may be conducted at the same time as the examination which serves as the basis for the portion of his report relating to the immediately following plan year. The report of the accountant shall be prepared in conformity with section 103(a)(3)(A) of the Act and regulations thereunder.

[46 FR 1265, Jan. 6, 1981]

Subpart E—Reporting Requirements

(The information collection requirements contained in subpart E were approved by the Office of Management and Budget under control number 1210–0016)

§ 2520.104a–1 Filing with the Secretary of Labor.

(a) *General reporting requirements.* Part 1 of title I of the Act requires that the administrator of an employee benefit plan subject to the provisions of part 1 file with the Secretary of Labor certain reports and additional documents. Each report filed shall accurately and comprehensively detail the information required. Where a form is prescribed, the reports shall be filed on that form. The Secretary may reject any incomplete filing. Reports and documents shall be filed as specified in this part.

(b) *Exemption for certain welfare plans.* See §§ 2520.104–20, 2520.104–21, 2520.104–22, 2520.104–24, and 2520.104–25.

(c) *Alternative method of compliance for pension plans for certain selected employees.* See § 2520.104–23.

[42 FR 37185, July 19, 1977]

§ 2520.104a–2 Electronic filing of annual reports.

(a) Any annual report (including any accompanying statements or schedules) filed with the Secretary under part 1 of title I of the Act for any plan year (reporting year, in the case of common or collective trusts, pooled separate accounts, and similar nonplan entities) beginning on or after January 1, 2009, shall be filed electronically in accordance with the instructions applicable to such report, and such other guidance as the Secretary may provide.

(b) Nothing in paragraph (a) of this section is intended to alter or affect the duties of any person to retain records or to disclose information to participants, beneficiaries, or the Secretary.

[71 FR 41368, July 21, 2006, as amended at 72 FR 64729, Nov. 16, 2007]

§§ 2520.104a–3—2520.104a–4 [Reserved]

§ 2520.104a–5 Annual reporting filing requirements.

(a) *Filing obligation.* Except as provided in § 2520.104a–6, the administrator of an employee benefit plan required to file an annual report pursuant to section 104(a)(1) of the Act shall file an annual report containing the items prescribed in § 2520.103–1 within:

(1) [Reserved]

(2) Seven months after the close of any plan year which begins after December 31, 1975, unless extended. See ''When to file'' instructions of the appropriate Annual Return/Report Form.

(b) *Where to file.* The annual report described in § 2520.103–1 shall be filed in accordance with and at the address provided in the instructions to the Annual Return/Report Form.

[43 FR 10152, Mar. 10, 1978; 43 FR 14010, Apr. 4, 1978; 67 FR 777, Jan. 7, 2002]

§ 2520.104a–6 Annual reporting for plans which are part of a group insurance arrangement.

(a) *General.* A trust or other entity described in § 2520.104–43(b) that files an annual report in accordance with the terms of subsections (b) and (c) shall be deemed to have filed such report in accordance with § 2520.104a–6 for purposes of § 2520.104–43.

(b) *Date of filing.* The annual report shall be filed within:

(1) Eleven and one-half months after the close of the fiscal year of the trust or other entity described in § 2520.104–43 which begins in 1975 or December 15, 1977, whichever is later; and

(2) Seven months after the close of the fiscal year of the trust or other entity which begins after December 31, 1975, unless extended. See ''When to file'' instructions of the appropriate Annual Return/Report Form.

(c) *Where to file.* The annual report prescribed in § 2520.103–2 shall be filed in accordance with and at the address provided in the instructions to the Annual Return/Report Form.

[43 FR 10152, Mar. 10, 1978; 43 FR 14010, Apr. 4, 1978]

§ 2520.104a–7 [Reserved]

§ 2520.104a–8 Requirement to furnish documents to the Secretary of Labor on request.

(a) *In general.* (1) Under section 104(a)(6) of the Act, the administrator of an employee benefit plan subject to the provisions of part 1 of title I of the Act is required to furnish to the Secretary, upon request, any documents relating to the employee benefit plan. For purposes of section 104(a)(6) of the Act, the administrator of an employee benefit plan shall furnish to the Secretary, upon service of a written request, a copy of:

(i) The latest updated summary plan description (including any summaries of material modifications to the plan or changes in the information required to be included in the summary plan description); and

(ii) Any other document described in section 104(b)(4) of the Act with respect to which a participant or beneficiary has requested, in writing, a copy from the plan administrator and which the

administrator has failed or refused to furnish to the participant or beneficiary.

(2) *Multiple requests for document(s).* Multiple requests under this section for the same or similar document or documents shall be considered separate requests for purposes of § 2560.502c–6(a).

(b) For purposes of this section, a participant or beneficiary will include any individual who is:

(1) A participant or beneficiary within the meaning of ERISA sections 3(7) and 3(8), respectively;

(2) An alternate payee under a qualified domestic relations order (see ERISA section 206(d)(3)(K)) or prospective alternate payee (spouses, former spouses, children or other dependents);

(3) A qualified beneficiary under COBRA (see ERISA section 607(3)) or prospective qualified beneficiary (spouse or dependent child);

(4) An alternate recipient under a qualified medical child support order (see ERISA section 609(a)(2)(C)) or a prospective alternate recipient; or

(5) A representative of any of the foregoing.

(c) *Service of request.* Requests under this section shall be served in accordance with § 2560.502c–6(i).

(d) *Furnishing documents.* A document shall be deemed to be furnished to the Secretary on the date the document is received by the Department of Labor at the address specified in the request; or, if a document is delivered by certified mail, the date on which the document is mailed to the Department of Labor at the address specified in the request.

[67 FR 784, Jan. 7, 2002]

Subpart F—Disclosure Requirements

(The information collection requirements contained in subpart F were approved by the Office of Management and Budget under control number 1210–0016)

§ 2520.104b–1 Disclosure.

(a) *General disclosure requirements.* The administrator of an employee benefit plan covered by Title I of the Act must disclose certain material, including reports, statements, notices, and other documents, to participants, beneficiaries and other specified individuals. Disclosure under Title I of the Act generally takes three forms. First, the plan administrator must, by direct operation of law, furnish certain material to all participants covered under the plan and beneficiaries receiving benefits under the plan (other than beneficiaries under a welfare plan) at stated times or if certain events occur. Second, the plan administrator must furnish certain material to individual participants and beneficiaries upon their request. Third, the plan administrator must make certain material available to participants and beneficiaries for inspection at reasonable times and places.

(b) *Fulfilling the disclosure obligation.* (1) Except as provided in paragraph (e) of this section, where certain material, including reports, statements, notices and other documents, is required under Title I of the Act, or regulations issued thereunder, to be furnished either by direct operation of law or on individual request, the plan administrator shall use measures reasonably calculated to ensure actual receipt of the material by plan participants, beneficiaries and other specified individuals. Material which is required to be furnished to all participants covered under the plan and beneficiaries receiving benefits under the plan (other than beneficiaries under a welfare plan) must be sent by a method or methods of delivery likely to result in full distribution. For example, in-hand delivery to an employee at his or her worksite is acceptable. However, in no case is it acceptable merely to place copies of the material in a location frequented by participants. It is also acceptable to furnish such material as a special insert in a periodical distributed to employees such as a union newspaper or a company publication if the distribution list for the periodical is comprehensive and up-to-date and a prominent notice on the front page of the periodical advises readers that the issue contains an insert with important information about rights under the plan and the Act which should be read and retained for future reference. If some participants and beneficiaries are not on the mailing list, a periodical must be used in conjunction with other methods of

distribution such that the methods taken together are reasonably calculated to ensure actual receipt. Material distributed through the mail may be sent by first, second, or third-class mail. However, distribution by second or third-class mail is acceptable only if return and forwarding postage is guaranteed and address correction is requested. Any material sent by second or third-class mail which is returned with an address correction shall be sent again by first-class mail or personally delivered to the participant at his or her worksite.

(2) For purposes of section 104(b)(4) of the Act, materials furnished upon written request shall be mailed to an address provided by the requesting participant or beneficiary or personally delivered to the participant or beneficiary.

(3) For purposes of section 104(b)(2) of the Act, where certain documents are required to be made available for examination by participants and beneficiaries in the principal office of the plan administrator and in such other places as may be necessary to make available all pertinent information to all participants and beneficiaries, disclosure shall be made pursuant to the provisions of this paragraph. Such documents must be current, readily accessible, and clearly identified, and copies must be available in sufficient number to accommodate the expected volume of inquiries. Plan administrators shall make copies of the latest annual report, and the bargaining agreement, trust agreement, contract, or other instruments under which the plan is established or operated available at all times in their principal offices. They are not required to maintain these plan documents at all times at each employer establishment or union hall or office as described in paragraphs (b)(3)(i), (ii), and (iii) of this section, but the documents must be made available at any such location within ten calendar days following the day on which a request for disclosure at that location is made. Plan administrators shall make plan documents available at the appropriate employer establishment or union meeting hall or office within the required ten day period when a request is made directly to the plan administrator or through a procedure establishing reasonable rules governing the making of requests for examination of plan documents. If a plan administrator prescribes such a procedure and communicates it to plan participants and beneficiaries, a plan administrator will not be required to comply with a request made in a manner which does not conform to the established procedure. In order to comply with the requirements of this section, a procedure for making requests to examine plan documents must permit requests to be made in a reasonably convenient manner both directly to the plan administrator and at each employer establishment, or union meeting hall or office where documents must be made available in accordance with this paragraph. If no such reasonable procedure is established, a good faith effort by a participant or beneficiary to request examination of plan documents will be deemed a request to the plan administrator for purposes of this paragraph.

(i) In the case of a plan not maintained according to a collective bargaining agreement, including a plan maintained by a single employer with more than one establishment, a multiple employer plan, and a plan maintained by a controlled group of corporations (within the meaning of section 1563(a) of the Internal Revenue Code of 1954 (the Code)), determined without regard to section 1563(a)(4) and (e)(3)(C) of the Code), documents shall be made available for examination in the principal office of the employer and at each employer establishment in which at least 50 participants covered under a plan are customarily working. ''Establishment'' means a single physical location where business is conducted or where services or industrial operations are performed. Where employees are engaged in activities which are physically dispersed, such as agriculture, construction, transportation and communications, the ''establishment'' shall be the place to which employees report each day. When employees do not usually work at, or report to, a single establishment—for example, traveling salesmen, technicians, and engineers—the establishment shall

be the location from which the employees customarily carry out their activities—for example the field office of an engineering firm servicing at least 50 participants covered under the plan.

(ii) In the case of a plan maintained solely by an employee organization, the plan administrator shall take measures to ensure that documents are available for examination at the meeting hall or office of each union local in which there are at least 50 participants covered under the plan. Such measures shall include distributing copies of the documents to each union local in which there are at least 50 participants covered under the plan.

(iii) In the case of a plan maintained according to a collective bargaining agreement, including a collectively bargained single employer plan with more than one establishment, a collectively bargained multiple employer plan, and a multiemployer plan which meets the definition of section 3(37) of the Act, § 2510.3–37 of this chapter, and section 414(b) of the Internal Revenue Code of 1954 and 26 CFR 1.414(f) (40 FR 43034), documents shall be made available for examination in the principal office of the employee organization and at each employer establishment in which at least 50 participants covered under the plan are customarily working. In employment situations where employees do not usually work at, or report to, a single establishment, the plan administrator shall take measures to ensure that plan documents are available for examination at the meeting hall or office of each union local in which there are at least 50 participants covered under the plan.

(c) *Disclosure through electronic media.* (1) Except as otherwise provided by applicable law, rule or regulation, the administrator of an employee benefit plan furnishing documents through electronic media is deemed to satisfy the requirements of paragraph (b)(1) of this section with respect to an individual described in paragraph (c)(2) if:

(i) The administrator takes appropriate and necessary measures reasonably calculated to ensure that the system for furnishing documents—

(A) Results in actual receipt of transmitted information (e.g., using return-receipt or notice of undelivered electronic mail features, conducting periodic reviews or surveys to confirm receipt of the transmitted information); and

(B) Protects the confidentiality of personal information relating to the individual's accounts and benefits (e.g., incorporating into the system measures designed to preclude unauthorized receipt of or access to such information by individuals other than the individual for whom the information is intended);

(ii) The electronically delivered documents are prepared and furnished in a manner that is consistent with the style, format and content requirements applicable to the particular document;

(iii) Notice is provided to each participant, beneficiary or other individual, in electronic or non-electronic form, at the time a document is furnished electronically, that apprises the individual of the significance of the document when it is not otherwise reasonably evident as transmitted (e.g., the attached document describes changes in the benefits provided by your plan) and of the right to request and obtain a paper version of such document; and

(iv) Upon request, the participant, beneficiary or other individual is furnished a paper version of the electronically furnished documents.

(2) Paragraph (c)(1) shall only apply with respect to the following individuals:

(i) A participant who—

(A) Has the ability to effectively access documents furnished in electronic form at any location where the participant is reasonably expected to perform his or her duties as an employee; and

(B) With respect to whom access to the employer's or plan sponsor's electronic information system is an integral part of those duties; or

(ii) A participant, beneficiary or any other person entitled to documents under Title I of the Act or regulations issued thereunder (including, but not limited to, an ''alternate payee'' within the meaning of section 206(d)(3) of the Act and a ''qualified beneficiary'' within the meaning of section 607(3) of the Act) who—

(A) Except as provided in paragraph (c)(2)(ii) (B) of this section, has affirmatively consented, in electronic or non-

electronic form, to receiving documents through electronic media and has not withdrawn such consent;

(B) In the case of documents to be furnished through the Internet or other electronic communication network, has affirmatively consented or confirmed consent electronically, in a manner that reasonably demonstrates the individual's ability to access information in the electronic form that will be used to provide the information that is the subject of the consent, and has provided an address for the receipt of electronically furnished documents;

(C) Prior to consenting, is provided, in electronic or non-electronic form, a clear and conspicuous statement indicating:

(1) The types of documents to which the consent would apply;

(2) That consent can be withdrawn at any time without charge;

(3) The procedures for withdrawing consent and for updating the participant's, beneficiary's or other individual's address for receipt of electronically furnished documents or other information;

(4) The right to request and obtain a paper version of an electronically furnished document, including whether the paper version will be provided free of charge; and

(5) Any hardware and software requirements for accessing and retaining the documents; and

(D) Following consent, if a change in hardware or software requirements needed to access or retain electronic documents creates a material risk that the individual will be unable to access or retain electronically furnished documents:

(1) Is provided with a statement of the revised hardware or software requirements for access to and retention of electronically furnished documents;

(2) Is given the right to withdraw consent without charge and without the imposition of any condition or consequence that was not disclosed at the time of the initial consent; and

(3) Again consents, in accordance with the requirements of paragraph (c)(2)(ii)(A) or paragraph (c)(2)(ii)(B) of this section, as applicable, to the receipt of documents through electronic media.

(d) *Participant and beneficiary status for purposes of section 101(a) and 104(b)(1) of the Act and subpart F of this part.* See §§ 2510.3–3(d)(1), 2510.3–3(d)(2) and 2520.3–3(d)(3) of this chapter.

(e) *Limitations.* This section does not apply to disclosures required under provisions of part 2 and part 3 of the Act over which the Secretary of the Treasury has interpretative and regulatory authority pursuant to Reorganization Plan No. 4 of 1978.

(Approved by the Office of Management and Budget under control number 1210–0039)

[42 FR 37186, July 19, 1977, as amended at 62 FR 16985, Apr. 8, 1997; 62 FR 36205, July 7, 1997; 67 FR 777, Jan. 7, 2002; 67 FR 17275, Apr. 9, 2002]

§ 2520.104b–2 Summary plan description.

(a) *Obligation to furnish.* Under the authority of sections 104(b)(1) and 104(c) of the Act, the plan administrator of an employee benefit plan subject to the provisions of part 1 of title I shall furnish a copy of the summary plan description and a statement of ERISA rights as provided in § 2520.102–3(t), to each participant covered under the plan (as defined in § 2510.3–3(d)), and each beneficiary receiving benefits under a pension plan on or before the later of:

(1) The date which is 90 days after the employee becomes a participant, or (in the case of a beneficiary receiving benefits under a pension plan) within 90 days after he or she first receives benefits, except as provided in § 2520.104b–4(a), or,

(2) Within 120 days after the plan becomes subject to part 1 of title I.

(3)(i) A plan becomes subject to part 1 of title I on the first day on which an employee is credited with an hour of service under § 2530.200b–2 or § 2530.200b–3. Where a plan is made prospectively effective to take effect after a certain date or after a condition is satisfied, the day upon which the plan becomes subject to part 1 of title I is the day after such date or condition is satisfied. Where a plan is adopted with a retroactive effective date, the 120 day period begins on the day after the plan

is adopted. Where a plan is made retroactively effective dependent on a condition, the day on which the plan becomes subject to part 1 of title I is the day after the day on which the condition is satisfied. Where a plan is made retroactively effective subject to a contingency which may or may not occur in the future, the day on which the plan becomes subject to part 1, title I is the day after the day on which the contingency occurs.

(ii) Examples: Company A is negotiating the purchase of Company B. On September 1, 1978, as part of the negotiations, Company A adopts a pension plan covering the employees of Company B, contingent on the successful conclusion of its negotiations to purchase Company B. The plan provides that it shall take effect on the first day of the calendar year in which the purchase is concluded. On February 1, 1979, the negotiations conclude with Company A's purchase of Company B. The plan therefore becomes effective on February 1, 1979, retroactive to January 1, 1979. The summary plan description must be filed and disclosed no later than 120 days after February 1, 1979.

(b) *Periods for furnishing updated summary plan description.* (1) For purposes of the requirement to furnish the updated summary plan description to each participant and each beneficiary receiving benefits under the plan (other than beneficiaries receiving benefits under a welfare plan) required by section 104(b)(1) of the Act, the administrator of an employee benefit plan shall furnish such updated summary plan description no later than 210 days following the end of the plan year which occurs five years after the last date a change in the information required to be disclosed by section 102 or 29 CFR 2520.102–3 would have been reflected in the most recently distributed summary plan description (or updated summary plan description) as described in section 102 of the Act.

(2) In the case of a plan to which no amendments have been made between the end of the time period covered by the last distributed summary plan description (or updated summary plan description), described in section 102 of the Act, and the next occurring applicable date described in paragraph (b)(1) of this section, for purposes of the requirement to furnish the updated summary plan description to each participant, and to each beneficiary receiving benefits under the plan (other than beneficiaries receiving benefits under a welfare plan), required by section 104(b)(1) of the Act, the administrator of an employee benefit plan shall furnish such updated summary plan description no later than 210 days following the end of the plan year which occurs ten years after the last date a change in the information required to be disclosed by section 102 or 29 CFR 2520.102–3 would have been reflected in the most recently distributed summary plan description (or updated summary plan description), as described in section 102 of the Act.

(c)–(f) [Reserved]

(g) *Terminated plans.* (1) If, on or before the date by which a plan is required to furnish a summary plan description or updated summary plan description to participants and pension plan beneficiaries under this section, the plan has terminated within the meaning of paragraph (g)(2) of this section, the administrator of such plan is not required to furnish to participants covered under the plan or to beneficiaries receiving benefits under the plan a summary plan description.

(2) For purposes of this section, a plan shall be considered terminated if:

(i) In the case of an employee pension benefit plan, all distributions to participants and beneficiaries have been completed; and

(ii) In the case of an employee welfare benefit plan, no claims can be incurred which will result in a liability of the plan to pay benefits. A claim is incurred upon the occurrence of the event or condition from which the claim arises (whether or not discovered).

(h) [Reserved]

(i) *Style and format of the summary plan description.* See § 2520.102–2.

(j) *Contents of the summary plan description.* See § 2520.102–3.

(k) *Option for different summary plan descriptions.* See § 2520.102–4; § 2520.104–26; and § 2520.104–27.

(l) *Employee benefit plan—participant covered under a plan.* See § 2510.3–3(d).

[42 FR 37187, July 19, 1977, as amended at 45 FR 14032, Mar. 4, 1980; 48 FR 1714, Jan. 14, 1983; 61 FR 33849, 33850, July 1, 1996; 67 FR 777, Jan. 7, 2002]

§ 2520.104b–3 Summary of material modifications to the plan and changes in the information required to be included in the summary plan description.

(a) The administrator of an employee benefit plan subject to the provisions of part 1 of title I of the Act shall, in accordance with § 2520.104b–1(b), furnish a summary description of any material modification to the plan and any change in the information required by section 102(b) of the Act and § 2520.102–3 of these regulations to be included in the summary plan description to each participant covered under the plan and each beneficiary receiving benefits under the plan. Except as provided in paragraph (d) of this section, the plan administrator shall furnish this summary, written in a manner calculated to be understood by the average plan participant, not later than 210 days after the close of the plan year in which the modification or change was adopted. This disclosure date is not affected by retroactive application to a prior plan year of an amendment which makes a material modification to the plan; a modification does not occur before it is adopted. For example, a calendar year plan adopts a modification in April, 1978. The modification, by its terms, applies retroactively to the 1977 plan year. A summary description of the material modification is furnished on or before July 29, 1979. A plan which adopts an amendment which makes a material modification to the plan which takes effect on a date in the future must disclose a summary of that modification within 210 days after the close of the plan year in which the modification or change is adopted. Under the authority of sections 104(a)(3) and 110 of the Act, a summary description of a material modification or change is not required to be disclosed if it is rescinded or otherwise does not take effect. For example, a calendar year plan adopts a modification in June, 1978. The modification, by its terms, becomes effective beginning in plan year 1979. Before the beginning of plan year 1979, the prospective modification is withdrawn. No summary of the material modification is required to be disclosed.

(b) The summary of material modifications to the plan or changes in information required to be included in the summary plan description need not be furnished separately if the changes or modifications are described in a timely summary plan description. For example, a calendar year plan adopts a material modification on June 3, 1976. The modification is incorporated in a summary plan description furnished on July 15, 1977. No separate summary of the material modification is furnished. The plan adopts another material modification September 15, 1977. A separate summary of the modification is furnished on or before July 29, 1978.

(c) The copy of the summary plan description furnished in accordance with §§ 2520.104b–2(a)(1)(i) and 2520.104b–4 shall be acompanied by all summaries of material modifications or changes in information required to be included in the summary plan description which have not been incorporated into that summary plan description.

(d) *Special rule for group health plans*—(1) *General.* Except as provided in paragraph (d)(2) of this section, the administrator of a group health plan, as defined in section 733(a)(1) of the Act, shall furnish to each participant covered under the plan a summary, written in a manner calculated to be understood by the average plan participant, of any modification to the plan or change in the information required to be included in the summary plan description, within the meaning of paragraph (a) of this section, that is a material reduction in covered services or benefits not later than 60 days after the date of adoption of the modification or change.

(2) *90-day alternative rule.* The administrator of a group health plan shall not be required to furnish a summary of any material reduction in covered services or benefits within the 60-day period described in paragraph (d)(1) of this section to any participant covered under the plan who would reasonably

be expected to be furnished such summary in connection with a system of communication maintained by the plan sponsor or administrator, with respect to which plan participants are provided information concerning their plan, including modifications and changes thereto, at regular intervals of not more than 90 days and such communication otherwise meets the disclosure requirements of 29 CFR 2520.104b–1.

(3) *''Material reduction''*. (i) For purposes of this paragraph (d), a ''material reduction in covered services or benefits'' means any modification to the plan or change in the information required to be included in the summary plan description that, independently or in conjunction with other contemporaneous modifications or changes, would be considered by the average plan participant to be an important reduction in covered services or benefits under the plan.

(ii) A ''reduction in covered services or benefits'' generally would include any plan modification or change that: eliminates benefits payable under the plan; reduces benefits payable under the plan, including a reduction that occurs as a result of a change in formulas, methodologies or schedules that serve as the basis for making benefit determinations; increases premiums, deductibles, coinsurance, copayments, or other amounts to be paid by a participant or beneficiary; reduces the service area covered by a health maintenance organization; establishes new conditions or requirements (e.g., preauthorization requirements) to obtaining services or benefits under the plan.

(e) *Applicability date*. Paragraph (d) of this section is applicable as of the first day of the first plan year beginning after June 30, 1997.

(f)–(g) [Reserved]

(Approved by the Office of Management and Budget under control number 1210–0039)

[42 FR 37188, July 19, 1977, as amended at 62 FR 16985, Apr. 8, 1997; 62 FR 36205, July 7, 1997; 65 FR 70243, Nov. 21, 2000; 66 FR 34994, July 2, 2001; 67 FR 777, Jan. 7, 2002]

§ 2520.104b–4 Alternative methods of compliance for furnishing the summary plan description and summaries of material modifications of a pension plan to a retired participant, a separated participant with vested benefits, and a beneficiary receiving benefits.

Under the authority of section 110 of the Act, in the case of an employee pension benefit plan—

(a) *Summary plan descriptions*. A plan administrator will be deemed to satisfy the requirements of section 104(b)(1) of the Act and § 2520.104b–2(a) to furnish a copy of the initial summary plan description to a retired participant, a beneficiary receiving benefits, or a separated participant with vested benefits (''vested separated participant'') if, no earlier than the date stated in paragraph (a)(4) of this section,

(1) In the case of a retired participant or a beneficiary receiving benefits, a document is furnished which—

(i) Meets the requirements of §§ 2520.102–2 and 2520.102–3 except paragraphs (b)(3), (b)(4), (j), (k), (l), (n), (o) and (p);

(ii) Contains a statement that the benefit payment presently being received by the retired participant or beneficiary receiving benefits will continue in the same amount and for the period provided in the mode of settlement selected at retirement, and will not be changed except as described in paragraph (a)(1)(iii) of this section; and

(iii) Contains a statement describing any plan provision under which the present benefit payment may be reduced, changed, terminated, forfeited or suspended;

(2) In the case of a vested separated participant, a document is furnished which—

(i) Meets the requirements of §§ 2520.102–2 and 2520.102–3 except paragraphs (b)(3), (b)(4), (j), (l), (n), (o), (p) and (r);

(ii)(A) If at or after separation, a separated vested participant was furnished a statement of the dollar amount of the vested benefit or the method of computation of the benefit, includes a statement that the dollar amount of the vested benefit was previously furnished and that a copy of the previously furnished statement of the dollar amount of such vested benefit or

method of computation of the benefit may be obtained from the plan upon request;

(B) If the vested separated participant was not furnished a statement of the dollar amount of the vested benefit or the method of computation of the benefit, the plan furnishes either a statement of the dollar amount of the vested benefit, or a statement of the formula used to determine the dollar amount of the vested benefit;

(iii) Includes a statement of the form in which the benefits will be paid and duration of the payment period or a description of the optional modes of payment available under the plan; and

(iv) Includes a statement describing any plan provision under which a benefit may be reduced, changed, terminated, forfeited or suspended; or

(3)(i) Such retired participant, vested separated participant, or beneficiary receiving benefits was furnished with a copy of a document which—

(A) Satisfies the requirements of section 102(a)(1) of the Act and § 2520.102–2 (relating to the style and format of the summary plan description) and § 2520.102–3 (relating to the content of the summary plan description);

(B) Describes the rights and obligations under the plan of such retired participant, vested separated participant, or beneficiary receiving benefits as of the date stated in subparagraph (4);

(ii) In the case of a person who retired, became a beneficiary, or separated with vested benefits before November 16, 1977, a document will be deemed to comply with the requirements of paragraph (a)(2)(i) of this section if the document omitted only information described in one or more of the provisions of § 2520.102–3 listed below, provided that a supplement containing such information, which meets the requirements of § 2520.102–2, is furnished to the retired participant, vested separated participant, or beneficiary receiving benefits by November 16, 1977.

(A) Employer identification number (EIN), as required by § 2520.102–3(c);

(B) Type of administration, as required by § 2520.102–3(e);

(C) Name of agent for service of legal process, as required by § 2520.102–3(g);

(D) Names and addresses of trustees, as required by § 2520.102–3(h);

(E) Statement regarding plan termination insurance as required by § 2520.102–3(m);

(F) Date of the end of the fiscal year, as required by § 2520.102–3(r); or

(G) Statement of ERISA rights, as required by § 2520.102–3(t).

(4) For purposes of this paragraph the dates are: For a vested separated participant, the date of separation; for a beneficiary, the date on which payment of benefits commences; and for a retired participant, the date of retirement.

(b) *Updated summary plan descriptions.* A copy of an updated summary plan description need not be furnished as prescribed in section 104(b)(1) of the Act and § 2520.104b–2(b) to a retired participant, vested separated participant, or a beneficiary receiving benefits if—

(1)(i) On or after the date stated in paragraph (b)(1)(ii) of this section, the retired participant, vested separated participant, or beneficiary is furnished with a copy of the most recent summary plan description and a copy of any summaries of material modifications not incorporated in such summary plan description;

(ii) For purposes of paragraph (b)(1)(i) of this section the dates are: for a retired participant, the date of retirement; for a vested separated participant, the date of separation; and for a beneficiary, the date on which payment of benefits commences;

(2) No latter than the date on which an updated summary plan description is furnished to participants and beneficiaries as prescribed by section 104(b)(1) of the Act and § 2520.104b–2(b), a retired participant, vested separated participant, or beneficiary receiving benefits is furnished a notice containing the following:

(i) A statement that the benefit rights of such retired participant, vested separated participant, or beneficiary receiving benefits are set forth in the earlier summary plan description and any subsequently furnished summaries of material modifications (*see* paragraph (c)), and

(ii) A statement that such retired participant, vested separated participant, or beneficiary receiving benefits

may obtain a copy of the earlier summary plan description and summaries of material modifications described in paragraph (b)(2)(i) of this section, and the updated summary plan description, without charge, upon request, from the plan administrator; and

(3) The plan administrator furnishes a copy of the documents described in paragraph (b)(2)(ii) of this section to such retired participant, vested separated participant or beneficiary, without charge, upon request.

(c) *Summary of material modifications or changes.* A summary description of a material modification to the plan or a change in the information required to be included in the summary plan description need not be furnished to a retired participant, a vested separated participant or a beneficiary receiving benefits under the plan, within the time prescribed in section 104(b)(1) of the Act and § 2520.104b–3 for furnishing summary descriptions of such modifications and changes, if the material modification or change in no way affects such retired participant's, vested separated participant's, or beneficiary's rights under the plan. For example, a change in trustees is information which such a person may need to know in order to make inquiries about his or her rights expeditiously, and hence must be furnished. On the other hand, a modification in benefits under the plan to which such retired participant, vested separated participant, or beneficiary had not at any time been entitled (and would not in the future be entitled) would not affect his or her rights and hence need not be furnished. If such retired participant, vested separated participant, or beneficiary requests a copy of a summary description of a material modification or a change which was not furnished, the plan administrator shall furnish the copy, without charge.

[45 FR 14032, Mar. 4, 1980, as amended at 61 FR 33850, July 1, 1996]

§ 2520.104b–10 Summary Annual Report.

(a) *Obligation to furnish.* Except as otherwise provided in paragraph (g) of this section, the administrator of any employee benefit plan shall furnish annually to each participant of such plan and to each beneficiary receiving benefits under such plan (other than beneficiaries under a welfare plan) a summary annual report conforming to the requirements of this section. Such furnishing of the summary annual report shall take place in accordance with the requirements of § 2520.104b–1 of this part.

(b) [Reserved]

(c) *When to furnish.* Except as otherwise provided in this paragraph (c), the summary annual report required by paragraph (a) of this section shall be furnished within nine months after the close of the plan year.

(1) In the case of a welfare plan described in § 2520.104–43 of this part, such furnishing shall take place within 9 months after the close of the fiscal year of the trust or other entity which files the annual report under § 2520.104a–6 of this part.

(2) When an extension of time in which to file an annual report has been granted by the Internal Revenue Service, such furnishing shall take place within 2 months after the close of the period for which the extension was granted.

(d) *Contents, style and format.* Except as otherwise provided in this paragraph (d), the summary annual report furnished to participants and beneficiaries of an employee pension benefit plan pursuant to this section shall consist of a completed copy of the form prescribed in paragraph (d)(3) of this section, and the summary annual report furnished to participants and beneficiaries of an employee welfare benefit plan pursuant to this section shall consist of a completed copy of the form prescribed in paragraph (d)(4) of this section. The information used to complete the form shall be based upon information contained in the most recent annual report of the plan which is required to be filed in accordance with section 104(a)(1) of the Act.

(1) Any portion of the forms set forth in this paragraph (d) which is not applicable to the plan to which the summary annual report relates, or which would require information which is not required to be reported on the annual report of that plan, may be omitted.

(2) Where the plan administrator determines that additional explanation of

any information furnished pursuant to this paragraph (d) is necessary to fairly summarize the annual report, such explanation shall be set forth following the completed form required by this paragraph (d) and shall be headed, ''Additional Explanation.''

(3) *Form for Summary Annual Report Relating to Pension Plans.*

SUMMARY ANNUAL REPORT FOR (NAME OF PLAN)

This is a summary of the annual report for (name of plan and EIN) for (period covered by this report). The annual report has been filed with the Pension and Welfare Benefits Administration, as required under the Employee Retirement Income Security Act of 1974 (ERISA).

Basic Financial Statement

Benefits under the plan are provided by (indicate funding arrangements). Plan expenses were ($). These expenses included ($) in administrative expenses and ($) in benefits paid to participants and beneficiaries, and ($) in other expenses. A total of ( ) persons were participants in or beneficiaries of the plan at the end of the plan year, although not all of these persons had yet earned the right to receive benefits.

[If the plan is funded other than solely by allocated insurance contracts:]

The value of plan assets, after subtracting liabilities of the plan, was ($) as of (the end of the plan year), compared to ($) as of (the beginning of the plan year). During the plan year the plan experienced an (increase) (decrease) in its net assets of ($) This (increase) (decrease) includes unrealized appreciation or depreciation in the value of plan assets; that is, the difference between the value of the plan's assets at the end of the year and the value of the assets at the beginning of the year or the cost of assets acquired during the year. The plan had total income of ($), including employer contributions of ($), employee contributions of ($), (gains) (losses) of ($), from the sale of assets, and earnings from investments of ($).

[If any funds are used to purchase allocated insurance contracts:]

The plan has (a) contract(s) with (name of insurance carrier(s)) which allocate(s) funds toward (state whether individual policies, group deferred annuities or other). The total premiums paid for the plan year ending (date) were ($).

Minimum Funding Standards

[If the plan is a defined benefit plan:]

An actuary's statement shows that (enough money was contributed to the plan to keep it funded in accordance with the minimum funding standards of ERISA) (not enough money was contributed to the plan to keep it funded in accordance with the mimimum funding standards of ERISA. The amount of the deficit was $).

[If the plan is a defined contribution plan covered by funding requirements:]

(Enough money was contributed to the plan to keep it funded in accordance with the minimum funding standards of ERISA) (Not enough money was contributed to the plan to keep it funded in accordance with the minimum funding standards of ERISA. The amount of the deficit was $).

Your Rights to Additional Information

You have the right to receive a copy of the full annual report, or any part thereof, on request. The items listed below are included in that report: [*Note*—list only those items which are actually included in the latest annual report]

1. an accountant's report;
2. financial information and information on payments to service providers;
3. assets held for investment;
4. fiduciary information, including non-exempt transactions between the plan and parties-in-interest (that is, persons who have certain relationships with the plan);
5. loans or other obligations in default or classified as uncollectible;
6. leases in default or classified as uncollectible;
7. transactions in excess of 5 percent of the plan assets;
8. insurance information including sales commissions paid by insurance carriers;
9. information regarding any common or collective trusts, pooled separate accounts, master trusts or 103–12 investment entities in which the plan participates, and
10. actuarial information regarding the funding of the plan.

To obtain a copy of the full annual report, or any part thereof, write or call the office of (name), who is (state title: e.g., the plan administrator), (business address and telephone number). The charge to cover copying costs will be ($) for the full annual report, or ($) per page for any part thereof.

You also have the right to receive from the plan administrator, on request and at no charge, a statement of the assets and liabilities of the plan and accompanying notes, or a statement of income and expenses of the plan and accompanying notes, or both. If you request a copy of the full annual report from the plan administrator, these two statements and accompanying notes will be included as part of that report. The charge to

cover copying costs given above does not include a charge for the copying of these portions of the report because these portions are furnished without charge.

You also have the legally protected right to examine the annual report at the main office of the plan (address), (at any other location where the report is available for examination), and at the U.S. Department of Labor in Washington, D.C., or to obtain a copy from the U.S. Department of Labor upon payment of copying costs. Requests to the Department should be addressed to: Public Disclosure Room, Room N–1513, Employee Benefits Security Administration, U.S. Department of Labor, 200 Constitution Avenue, N.W., Washington, D.C. 20210.

(4) *Form for Summary Annual Report Relating to Welfare Plans.*

SUMMARY ANNUAL REPORT FOR (NAME OF PLAN)

This is a summary of the annual report of the (name of plan, EIN and type of welfare plan) for (period covered by this report). The annual report has been filed with the Employee Benefits Security Administration, as required under the Employee Retirement Income Security Act of 1974 (ERISA).

[If any benefits under the plan are provided on an uninsured basis:]

(Name of sponsor) has committed itself to pay (all, certain) (state type of) claims incurred under the terms of the plan.

[If any of the funds are used to purchase insurance contracts:]

Insurance Information

The plan has (a) contract(s) with (name of insurance carrier(s)) to pay (all, certain) (state type of) claims incurred under the terms of the plan. The total premiums paid for the plan year ending (date) were ($_____).

[If applicable add:]

Because (it is a) (they are) so called ''experience-rated'' contract(s), the premium costs are affected by, among other things, the number and size of claims. Of the total insurance premiums paid for the plan year ending (date), the premiums paid under such ''experience-rated'' contract(s) were ($) and the total of all benefit claims paid under the(se) experience-rated contract(s) during the plan year was ($).

[If any funds of the plan are held in trust or in a separately maintained fund:]

Basic financial statement

The value of plan assets, after subtracting liabilities of the plan, was ($) as of (the end of plan year), compared to ($) as of (the beginning of the plan year). During the plan year the plan experienced an (increase) (decrease) in its net assets of

($). This (increase) (decrease) includes unrealized appreciation and depreciation in the value of plan assets; that is, the difference between the value of the plan's assets at the end of the year and the value of the assets at the beginning of the year or the cost of assets acquired during the year. During the plan year, the plan had total income of ($) including employer contributions of ($), employee contributions of ($), realized (gains) (losses) of ($) from the sale of assets, and earnings from investments of ($). Plan expenses were ($). These expenses included ($) in administrative expenses, ($) in benefits paid to participants and beneficiaries, and ($) in other expenses.

Your Rights to Additional Information

You have the right to receive a copy of the full annual report, or any part thereof, on request. The items listed below are included in that report: [Note—list only those items which are actually included in the latest annual report].

1. an accountant's report;
2. financial information and information on payments to service providers;
3. assets held for investment;
4. fiduciary information, including non-exempt transactions between the plan and parties-in-interest (that is, persons who have certain relationships with the plan);
5. loans or other obligations in default or classified as uncollectible;
6. leases in default or classified as uncollectible;
7. transactions in excess of 5 percent of the plan assets;
8. insurance information including sales commissions paid by insurance carriers; and
9. information regarding any common or collective trusts, pooled separate accounts, master trusts or 103–12 investment entities in which the plan participates.

To obtain a copy of the full annual report, or any part thereof, write or call the office of (name), who is (state title: e.g., the plan administrator), (business address and telephone number). The charge to cover copying costs will be ($) for the full annual report, or ($) per page for any part thereof.

You also have the right to receive from the plan administrator, on request and at no charge, a statement of the assets and liabilities of the plan and accompanying notes, or a statement of income and expenses of the plan and accompanying notes, or both. If you request a copy of the full annual report from the plan administrator, these two statements and accompanying notes will be included as part of that report. The charge to

cover copying costs given above does not include a charge for the copying of these portions of the report because these portions are furnished without charge.

You also have the legally protected right to examine the annual report at the main office of the plan (address), (at any other location where the report is available for examination), and at the U.S. Department of Labor in Washington, D.C. or to obtain a copy from the U.S. Department of Labor upon payment of copying costs. Requests to the Department should be addressed to: Public Disclosure Room, Room N–1513, Employee Benefits Security Administration, U.S. Department of Labor, 200 Constitution Avenue, N.W., Washington, D.C. 20210.

(e) *Foreign languages*. In the case of either—

(1) A plan which covers fewer than 100 participants at the beginning of a plan year in which 25 percent or more of all plan participants are literate only in the same non-English language; or

(2) A plan which covers 100 or more participants in which 500 or more participants or 10 percent or more of all plan participants, whichever is less, are literate only in the same non-English language—

The plan administrator for such plan shall provide these participants with an English-language summary annual report which prominently displays a notice, in the non-English language common to these participants, offering them assistance. The assistance provided need not involve written materials, but shall be given in the non-English language common to these participants. The notice offering assistance shall clearly set forth any procedures participants must follow to obtain such assistance.

(f) *Furnishing of additional documents to participants and beneficiaries*. A plan administrator shall promptly comply with any request by a participant or beneficiary for additional documents made in accordance with the procedures or rights described in paragraph (d) of this section.

(g) *Exemptions*. Notwithstanding the provisions of this section, a summary annual report is not required to be furnished with respect to the following:

(1) A totally unfunded welfare plan described in 29 CFR 2520.104–44(b)(1)(i);

(2) A welfare plan which meets the requirements of 29 CFR 2520.104–20(b);

(3) An apprenticeship or other training plan which meets the requirements of 29 CFR 2520.104–22;

(4) A pension plan for selected employees which meets the requirements of 29 CFR 2520.104–23;

(5) A welfare plan for selected employees which meets the requirements of 29 CFR 2520.104–24;

(6) A day care center referred to in 29 CFR 2520.104–25;

(7) A dues financed welfare plan which meets the requirements of 29 CFR 2520.104–26; and

(8) A dues financed pension plan which meets the requirements of 29 CFR 2520.104–27.

APPENDIX TO § 2520.104B–10—THE SUMMARY ANNUAL REPORT (SAR) UNDER ERISA: A CROSS-REFERENCE TO THE ANNUAL REPORT

SAR item	Form 5500 large plan filer line items	Form 5500 small plan filer line items	Form 5500–SF filer line items
A. PENSION PLAN:			
1. Funding arrangement	Form 5500–9a	Same	Not applicable.
2. Total plan expenses	Sch. H–2j	Sch. I–2j	Line 8h.
3. Administrative expenses	Sch. H–2i(5)	Sch. I–2h	Line 8f.
4. Benefits paid	Sch. H–2e(4)	Sch. I–2e	Line 8d.
5. Other expenses	Sch. H–Subtract the sum of 2e(4) & 2i(5) from 2j.	Sch. I–2i	Line 8g.
6. Total participants	Form 5500–6f	Same	Line 5b.
7. Value of plan assets (net):			
a. End of plan year.	Sch. H–1l [Col. (b)]	Sch. I–1c [Col. (b)]	Line 7c [Col. (b)].
b. Beginning of plan year.	Sch. H–1l [Col. (a)]	Sch. I–1c [Col. (a)]	Line 7c [Col. (a)].
8. Change in net assets	Sch. H–Subtract 1l [Col. (a)] from 1l [Col. (b)].	Sch. I–Subtract 1c [Col. (a) from Col. (b)].	Line 7c–Subtract Col. (a) from Col. (b).
9. Total income	Sch. H–2d	Sch. I–2d	Line 8c.
a. Employer contributions.	Sch. H–2a(1)(A) & 2a(2) if applicable.	Sch. I–2a(1) & 2b if applicable.	Line 8a(1) if applicable.
b. Employee contributions.	Sch. H–2a(1)(B) & 2a(2) if applicable.	Sch. I–2a(2) & 2b if applicable.	Line 8a(2) & 8a(3) if applicable.

APPENDIX TO § 2520.104B–10—THE SUMMARY ANNUAL REPORT (SAR) UNDER ERISA: A CROSS-REFERENCE TO THE ANNUAL REPORT—Continued

SAR item	Form 5500 large plan filer line items	Form 5500 small plan filer line items	Form 5500–SF filer line items
c. Gains (losses) from sale of assets.	Sch. H–2b(4)(C)	Not applicable	Not applicable.
d. Earnings from investments.	Sch. H–Subtract the sum of 2a(3), 2b(4)(C) and 2c from 2d.	Sch. I–2c	Line 8b.
10. Total insurance premiums.	Total of all Schs. A–6b	Total of all Schs. A–6b	Not applicable.
11. Unpaid minimum required contribution (S–E plans) or Funding deficiency (ME plans):.	Sch. SB–39	Same	Same.
a. S–E Defined benefit plans.			
b. ME Defined benefit plans.	Sch. MB–10	Same	Not applicable.
c. Defined contribution plans.	Sch. R–6c, if more than zero.	Same	Line 12d.
B. WELFARE PLAN			
1. Name of insurance carrier	All Schs. A–1(a)	Same	Not applicable.
2. Total (experience rated and non-experienced rated) insurance premiums.	All Schs. A–Sum of 9a(1) and 10a.	Same	Not applicable.
3. Experience rated premiums.	All Schs. A–9a(1)	Same	Not applicable.
4. Experience rated claims	All Schs. A–9b(4)	Same	Not applicable.
5. Value of plan assets (net):	Sch. H–1l [Col. (b)]	Sch. I–1c [Col. (b)]	Line 7c [Col. (b)].
a. End of plan year.			
b. Beginning of plan year.	Sch. H–1l [Col. (a)]	Sch. I–1c [Col. (a)]	Line 7c [Col. (a)].
6. Change in net assets	Sch. H–Subtract 1l [Col. (a)] from 1l [Col. (b)].	Sch. I–Subtract 1c [Col. (a)] from 1c [Col. (b)].	Line 7c–Subtract [Col. (a)] from 7c [Col. (b)].
7. Total income	Sch. H–2d	Sch. I–2d	Line 8c
a. Employer contributions.	Sch. H–2a(1)(A) & 2a(2) if applicable.	Sch. I–2a(1) & 2b if applicable.	Line 8a(1) if applicable.
b. Employee contributions.	Sch. H–2a(1)(B) & 2a(2) if applicable.	Sch. I–2a(2) & 2b if applicable.	Line 8a(2) if applicable.
c. Gains (losses) from sale of assets.	Sch. H–2b(4)(C)	Not applicable	Not applicable.
d. Earnings from investments.	Sch. H–Subtract the sum of 2a(3), 2b(4)(C) and 2c from 2d.	Sch. I–2c	Line 8b.
8. Total plan expenses	Sch. H–2j	Sch. I–2j	Line 8h.
9. Administrative expenses	Sch. H–2i(5)	Sch. I–2h	Line 8f.
10. Benefits paid	Sch. H–2e(4)	Sch. I–2e	Line 8d.
11. Other expenses	Sch. H–Subtract the sum of 2e(4) & 2i(5) from 2j.	Sch. I–2i	Line 8g.

[44 FR 19403, Apr. 3, 1979, as amended at 44 FR 31640, June 1, 1979; 47 FR 31873, July 23, 1982; 54 FR 8629, Mar. 1, 1989; 65 FR 21085, Apr. 19, 2000; 65 FR 35568, June 5, 2000; 68 FR 16400, Apr. 3, 2003; 72 FR 64729, Nov. 16, 2007]

§ 2520.104b–30 Charges for documents.

(a) *Application*. The plan administrator of an employee benefit plan may impose a reasonable charge to cover the cost of furnishing to participants and beneficiaries upon their written request as required under section 104(b)(4) of the Act, copies of the following information, statements or documents: The latest updated summary plan description, and the latest annual report, any terminal report, the bargaining agreement, trust agreement, contract, or other instruments under which the plan is established or operated. Except where explicitly permitted under the Act, no charge may be assessed for furnishing information, statements or documents as required by other provisions of the Act, which

include, in part 1 of title I, sections 104(b)(1), (2), (3) and (c) and 105(a) and (c).

(b) *Reasonableness.* The charge assessed by the plan administrator to cover the costs of furnishing documents is reasonable if it is equal to the actual cost per page to the plan for the least expensive means of acceptable reproduction, but in no event may such charge exceed 25 cents per page. For example, if a plan printed a large number of pamphlets at $1.00 per 50-page pamphlet, the actual cost of reproduction for the entire pamphlet ($1.00) would be equal to 2 cents per page. If only one page of such a pamphlet were requested, the actual cost of providing that page from the printed copy would be $1.00, since the copy would no longer be complete. In such a case, the least expensive means of acceptable reproduction would be individually reproducing the page requested at a charge of no more than 25 cents. On the other hand, if six pages of the same plan document were requested and each page cost 20 cents to be reproduced, the actual cost of providing those pages would be $1.20. In such a case, if a printed copy is available, the least expensive means of acceptable reproduction would be to use pages from the printed copy at a charge of no more than $1.00. No other charge for furnishing documents, such as handling or postage charges, will be deemed reasonable. The plan administrator shall provide information to a plan participant or beneficiary, upon request, about the charge that would be made to provide a copy of material described in this paragraph.

[41 FR 16964, Apr. 23, 1976, as amended at 41 FR 37575, Sept. 7, 1976; 75 FR 9342, Mar. 2, 2010]

Subpart G—Recordkeeping Requirements

§ 2520.107–1 Use of electronic media for maintenance and retention of records.

(a) *Scope and purpose.* Sections 107 and 209 of the Employee Retirement Income Security Act of 1974, as amended (ERISA), contain certain requirements relating to the maintenance of records for reporting and disclosure purposes and for determining the pension benefits to which participants and beneficiaries are or may become entitled. This section provides standards applicable to both pension and welfare plans concerning the use of electronic media for the maintenance and retention of records required to be kept under sections 107 and 209 of ERISA.

(b) *General requirements.* The record maintenance and retention requirements of sections 107 and 209 of ERISA are satisfied when using electronic media if:

(1) The electronic recordkeeping system has reasonable controls to ensure the integrity, accuracy, authenticity and reliability of the records kept in electronic form;

(2) The electronic records are maintained in reasonable order and in a safe and accessible place, and in such manner as they may be readily inspected or examined (for example, the recordkeeping system should be capable of indexing, retaining, preserving, retrieving and reproducing the electronic records);

(3) The electronic records are readily convertible into legible and readable paper copy as may be needed to satisfy reporting and disclosure requirements or any other obligation under Title I of ERISA;

(4) The electronic recordkeeping system is not subject, in whole or in part, to any agreement or restriction that would, directly or indirectly, compromise or limit a person's ability to comply with any reporting and disclosure requirement or any other obligation under Title I of ERISA; and

(5) Adequate records management practices are established and implemented (for example, following procedures for labeling of electronically maintained or retained records, providing a secure storage environment, creating back-up electronic copies and selecting an off-site storage location, observing a quality assurance program evidenced by regular evaluations of the electronic recordkeeping system including periodic checks of electronically maintained or retained records, and retaining paper copies of records that cannot be clearly, accurately or completely transferred to an electronic recordkeeping system).

(c) *Legibility and readability*. All electronic records must exhibit a high degree of legibility and readability when displayed on a video display terminal or other method of electronic transmission and when reproduced in paper form. The term ''legibility'' means the observer must be able to identify all letters and numerals positively and quickly to the exclusion of all other letters or numerals. The term ''readability'' means that the observer must be able to recognize a group of letters or numerals as words or complete numbers.

(d) *Disposal of original paper records*. Original paper records may be disposed of any time after they are transferred to an electronic recordkeeping system that complies with the requirements of this section, except such original records may not be discarded if the electronic record would not constitute a duplicate or substitute record under the terms of the plan and applicable federal or state law.

[67 FR 17275, Apr. 9, 2002]

SUBCHAPTER D—MINIMUM STANDARDS FOR EMPLOYEE PENSION BENEFIT PLANS UNDER THE EMPLOYEE RETIREMENT INCOME SECURITY ACT OF 1974

PART 2530—RULES AND REGULATIONS FOR MINIMUM STANDARDS FOR EMPLOYEE PENSION BENEFIT PLANS

Subpart A—Scope and General Provisions

Sec.
2530.200a Scope.
2530.200a–1 Relationship of the Act and the Internal Revenue Code of 1954.
2530.200a–2 Treasury regulations for purposes of the Act.
2530.200a–3 Labor regulations for purposes of the Internal Revenue Code of 1954.
2530.200b–1 Computation periods.
2530.200b–2 Hour of service.
2530.200b–3 Determination of service to be credited to employees.
2530.200b–4 One-year break in service.
2530.200b–5 Seasonal industries. [Reserved]
2530.200b–6 Maritime industry.
2530.200b–7 Day of service for employees in the maritime industry.
2530.200b–8 Determination of days of service to be credited to maritime employees.
2530.201–1 Coverage; general.
2530.201–2 Plans covered by part 2530.

Subpart B—Participation, Vesting and Benefit Accrual

2530.202–1 Eligibility to participate; general.
2530.202–2 Eligibility computation period.
2530.203–1 Vesting; general.
2530.203–2 Vesting computation period.
2530.203–3 Suspension of pension benefits upon employment.
2530.204–1 Year of participation for benefit accrual.
2530.204–2 Accrual computation period.
2530.204–3 Alternative computation methods for benefit accrual.
2530.204–4 Deferral of benefit accrual.

Subpart C—Form and Payment of Benefits

2530.205 [Reserved]
2530.206 Time and order of issuance of domestic relations orders.

Subpart D—Plan Administration as Related to Benefits

2530.207–2530.209 [Reserved]
2530.210 Employer or employers maintaining the plan.

AUTHORITY: Secs. 201, 202, 203, 204, 210, 505, 1011, 1012, 1014, and 1015, Pub. L. 93–406, 88 Stat. 852–862, 866–867, 894, 898–913, 924–929 (29 U.S.C. 1051–4, 1060, 1135, 26 U.S.C. 410, 411, 413, 414); Secretary of Labor's Order No. 13–76. Section 2530.206 also issued under sec. 1001, Pub. L. 109–280, 120 Stat. 780.

SOURCE: 41 FR 56462, Dec. 28, 1976, unless otherwise noted.

Subpart A—Scope and General Provisions

§ 2530.200a Scope.

§ 2530.200a–1 Relationship of the Act and the Internal Revenue Code of 1954.

(a) Part 2 of title I of the Employee Retirement Income Security Act of 1974 (hereinafter referred to as ''the Act'') contains minimum standards that a plan which is an employee pension benefit plan within the meaning of section 3(2) of the Act and which is covered under part 2 must satisfy. (For a general explanation of the coverage of part 2, see § 2530.201–1.) Substantially identical requirements are imposed by subchapter D of chapter 1 of subtitle A of the Internal Revenue Code of 1954 (hereinafter referred to as ''the Code'') for plans seeking qualification for certain tax benefits under the Code. In general, the Code provisions apply to ''qualified'' pension, profit-sharing, and stock bonus plans described in section 401(a) of the Code, annuity plans described in section 403(a) of the Code and bond purchase plans described in section 405(a) of the Code. The standards contained in title I of the Act apply generally to both ''nonqualified' and ''qualified'' employee pension benefit plans. The standards contained in the Act, and the related Code provisions, are ''minimum'' standards. In general, more liberal plan provisions (in terms of the benefit to be derived by the employee) are not prohibited.

(b) For a definition of the term ''employee pension benefit plan'', see section 3(2) of the Act and § 2510.3–2.

(c) For a statement of the coverage of part 2 of the Act, see sections 4 and 201

of the Act and §§ 2510.3–2, 2510.3–3, 2530.201–1 and 2530.201–2.

§ 2530.200a–2 Treasury regulations for purposes of the Act.

Regulations prescribed by the Secretary of the Treasury or his delegate under sections 410 and 411 of the Code (relating to minimum standards for participation and vesting) shall apply for purposes of sections 202 through 204 of the Act. Thus, except for those provisions (such as the definition of an hour of service or a year of service) for which authority to prescribe regulations is specifically delegated to the Secretary of Labor, regulations prescribed by the Secretary of the Treasury shall also be used to implement the related provisions contained in the Act. Those regulations specify the credit that must be given to an employee for years of service and years of participation completed by the employee. The allocation of regulatory jurisdiction between the Secretary of Treasury or his delegate and the Secretary of Labor is governed by titles I through III of the Act. *See* section 3002 of the Act (88 Stat. 996).

§ 2530.200a–3 Labor regulations for purposes of the Internal Revenue Code of 1954.

The Secretary of Labor is specifically authorized to prescribe certain regulations (generally relating to hour of service, year of service, break in service, year of participation and special rules for seasonal and maritime industries) applicable to both title I of the Act and sections 410 and 411 of the Code. These regulations are contained in this subpart (A) and subpart B of this part (2530) and must be integrated with regulations prescribed by the Secretary of the Treasury or his delegate under sections 410 of the Code (relating to minimum participation standards), 411(a) of the Code (relating to minimum vesting standards) and 411(b) of the Code (relating to benefit accrual requirements). The allocation of regulatory jurisdiction between the Secretary of Labor and the Secretary of the Treasury or his delegate is governed by titles I through III of the Act. *See* section 3002 of the Act (88 Stat. 996).

§ 2530.200b–1 Computation periods.

(a) *General*. Under sections 202, 203 and 204 of the Act and sections 410 and 411 of the Code, an employee's statutory entitlements with regard to participation, vesting and benefit accrual are generally determined by reference to years of service and years of participation completed by the employee and one-year breaks in service incurred by the employee. The units used for determining an employee's credit towards statutory participation, vesting and benefit accrual entitlements are in turn defined in terms of the number of hours of service credited to the employee during a specified period—in general, a twelve-consecutive-month period—referred to herein as a ''computation period''. A plan must designate eligibility computation periods pursuant to § 2530.202–2 and vesting computation periods pursuant to § 2530.203–2, and, under certain circumstances, a defined benefit plan must designate accrual computation periods pursuant to § 2530.204–2. An employee who is credited with 1000 hours of service during an eligibility computation period must generally be credited with a year of service for purposes of section 202 of the Act and section 410 of the Code (relating to minimum participation standards). An employee who is credited with 1000 hours of service during a vesting computation period must generally be credited with a year of service for purposes of section 203 of the Act and 411(a) of the Code (relating to minimum vesting standards). An employee who completes 1000 hours of service during an accrual computation period must, under certain circumstances, be credited with at least a partial year of participation for purposes of section 204 of the Act and section 411(b) of the Code (relating to benefit accrual requirements). With respect to benefit accrual, however, the plan may not be required to credit an employee with a full year of participation and, therefore, full accrual for such year of participation unless the employee is credited with the number of hours of service or other permissible units of credit prescribed under the plan for crediting of a full year of participation (*see* § 2530.204–2 (c) and (d)). It should be noted that under some of the

equivalencies which a plan may use under § 2530.200b–3 to determine the number of units of service to be credited to an employee in a computation period, an employee must be credited with a year of service of partial year of participation if the employee is credited with a number of units of service which is less than 1000 in a computation period. *See also* § 2530.200b–9, relating to elapsed time.

(b) *Rules generally applicable to computation periods.* In general, employment at the beginning or the end of an applicable computation period or on any particular date during the computation period is not determinative of whether the employee is credited with a year of service or a partial year of participation, or incurs a break in service, for the computation period. Rather, these determinations generally must be made solely with reference to the number of hours (or other units of service) which are credited to the employee during the applicable computation period. For example, an employee who is credited with 1000 hours of service during any portion of a vesting computation period must be credited with a year of service for that computation period regardless of whether the employee is employed by the employer on the first or the last day of the computation period. It should be noted, however, that in certain circumstances, a plan may provide that certain consequences follow from an employee's failure to be employed on a particular date. For example, under section 202(a)(4) of the Act and section 410(a)(4) of the Code, a plan may provide that an individual otherwise entitled to commence participation in the plan on a specified date does not commence participation on that date if he or she was separated from the service before that date. Similary, under section 204(b)(1) of the Act and section 411(b)(1) of the Code, a plan which is not a defined benefit plan is not subject to section 204 (b)(1) and (b)(3) of the Act and section 411 (b)(1) and (b)(3) of the Code. Such a plan, therefore, may provide that an individual who has been a participant in the plan, but who has separated from service before the date on which the employer's contributions to the plan or forfeitures are allocated among participant's accounts or before the last day of the vesting computation period, does not share in the allocation of such contributions or forfeitures even though the individual is credited with 1000 or more hours of service for the applicable vesting computation period. Under certain circumstances, however, such a plan provision may result in discrimination prohibited under section 401(a)(4) of the Code. *See* Revenue Ruling 76–250, I.R.B. 1976–27.

§ 2530.200b–2 Hour of service.

(a) *General rule.* An hour of service which must, as a minimum, be counted for the purposes of determining a year of service, a year of participation for benefit accrual, a break in service and employment commencement date (or reemployment commencement date) under sections 202, 203 and 204 of the Act and sections 410 and 411 of the Code, is an hour of service as defined in paragraphs (a)(1), (2) and (3) of this section. The employer may round up hours at the end of a computation period or more frequently.

(1) An hour of service is each hour for which an employee is paid, or entitled to payment, for the performance of duties for the employer during the applicable computation period.

(2) An hour of service is each hour for which an employee is paid, or entitled to payment, by the employer on account of a period of time during which no duties are performed (irrespective of whether the employment relationship has terminated) due to vacation, holiday, illness, incapacity (including disability), layoff, jury duty, military duty or leave of absence. Notwithstanding the preceding sentence,

(i) No more than 501 hours of service are required to be credited under this paragraph (a)(2) to an employee on account of any single continuous period during which the employee performs no duties (whether or not such period occurs in a single computation period);

(ii) An hour for which an employee is directly or indirectly paid, or entitled to payment, on account of a period during which no duties are performed is not required to be credited to the employee if such payment is made or due under a plan maintained solely for the purpose of complying with applicable

workmen's compensation, or unemployment compensation or disability insurance laws; and

(iii) Hours of service are not required to be credited for a payment which solely reimburses an employee for medical or medically related expenses incurred by the employee.

For purposes of this paragraph (a)(2), a payment shall be deemed to be made by or due from an employer regardless of whether such payment is made by or due from the employer directly, or indirectly through, among others, a trust fund, or insurer, to which the employer contributes or pays premiums and regardless of whether contributions made or due to the trust fund, insurer or other entity are for the benefit of particular employees or are on behalf of a group of employees in the aggregate.

(3) An hour of service is each hour for which back pay, irrespective of mitigation of damages, is either awarded or agreed to by the employer. The same hours of service shall not be credited both under paragraph (a)(1) or paragraph (a)(2), as the case may be, and under this paragraph (a)(3). Thus, for example, an employee who receives a back pay award following a determination that he or she was paid at an unlawful rate for hours of service previously credited will not be entitled to additional credit for the same hours of service. Crediting of hours of service for back pay awarded or agreed to with respect to periods described in paragraph (a)(2) shall be subject to the limitations set forth in that paragraph. For example, no more than 501 hours of service are required to be credited for payments of back pay, to the extent that such back pay is agreed to or awarded for a period of time during which an employee did not or would not have performed duties.

(b) *Special rule for determining hours of service for reasons other than the performance of duties.* In the case of a payment which is made or due on account of a period during which an employee performs no duties, and which results in the crediting of hours of service under paragraph (a)(2) of this section, or in the case of an award or agreement for back pay, to the extent that such award or agreement is made with respect to a period described in paragraph (a)(2) of this section, the number of hours of service to be credited shall be determined as follows:

(1) *Payments calculated on the basis of units of time.* (i) Except as provided in paragraph (b)(3) of this section, in case of a payment made or due which is calculated on the basis of units of time, such as hours, days, weeks or months, the number of hours of service to be credited shall be the number of regularly scheduled working hours included in the units of time on the basis of which the payment is calculated. For purposes of the preceding sentence, in the case of an employee without a regular work schedule, a plan may provide for the calculation of the number of hours to be credited on the basis of a 40-hour workweek or an 8-hour workday, or may provide for such calculation on any reasonable basis which reflects the average hours worked by the employee, or by other employees in the same job classification, over a representative period of time, provided that the basis so used is consistently applied with respect to all employees within the same job classifications, reasonably defined. Thus, for example, a plan may not use a 40-hour workweek as a basis for calculating the number of hours of service to be credited for periods of paid absences for one employee while using an average based on hours worked over a representative period of time as a basis for such calculation for another, similarly situated employee.

(ii) *Examples.* The following examples illustrate the rules in paragraph (b)(1) of this section without regard to paragraphs (b)(2) and (3).

(A) Employee A was paid for 6 hours of sick leave at his normal hourly rate. The payment was therefore calculated on the basis of units of time (hours). A must, therefore, be credited with 6 hours of service for the 6 hours of sick leave.

(B) Employee B was paid his normal weekly salary for 2 weeks of vacation. The payment was therefore calculated on the basis of units of time (weeks). B is scheduled to work 37½ hours per week (although from time to time working overtime). B must, therefore, be credited with 75 hours of service for the vacation (37½ hours per week multiplied by 2 weeks).

(C) Employee C spent 3 weeks on a paid vacation. C's salary is established at an annual rate but is paid on a biweekly basis. The amount of salary payments attributable to be paid vacation was calculated on the basis of units of time (weeks). C has no regular work schedule but works at least 50 hours per week. The plan provides for the calculation of hours of service to be credited to employees in C's situation for periods of paid absences on the basis of a 40-hour workweek. C must, therefore, be credited with 120 hours of service for the vacation (3 weeks multiplied by 40 hours per week).

(D) Employee D spent 2 weeks on vacation, for which he was paid $150. Although D has no regular work schedule, the $150 payment was established on the assumption that an employee in D's position works an average of 30 hours per week at a rate of $2.25 per hour. The payment of $150 was therefore calculated on the basis of units of time (weeks). The plan provides for the calculation of hours of service to be credited to employees in D's situation for periods of paid absences on the basis of the average number of hours worked by an employee over a period of 6 months. D's employer's records show that D worked an average of 28 hours per week for a 6-month period. D must, therefore, be credited with 56 hours of service for the vacation (28 hours per week multiplied by 2 weeks).

(E) Employee E is regularly scheduled to work a 40-hour week. During a computation period E is incapacitated as a result of injury for a period of 11 weeks. Under the sick leave policy of E's employer E is paid his normal weekly salary for the first 8 weeks of his incapacity. After 8 weeks the employer ceases to pay E's normal salary but, under a disability insurance program maintained by the employer, E receives payments equal to 65% of his normal weekly salary for the remaining 3 weeks during which E is incapacitated. For the period during which he is incapacitated, therefore, E receives credit for 440 hours of service (11 weeks multiplied by 40 hours per week) regardless of the fact that payments to E for the last 3 wseeks of the period during which hs was incapacitated were made in amounts less than E's normal compensation.

(2) *Payments not calculated on the basis of units of time.* (i) Except as provided in paragraph (b)(3) of this section, in the case of a payment made or due, which is not calculated on the basis of units of time, the number of hours of service to be credited shall be equal to the amount of the payment divided by the employee's most recent hourly ratre of compensation (as determined under paragraph (b)(2)(ii) of this section) before the period during which no duties are performed.

(ii) For purposes of paragraph (b)(2)(i) of this section an employee's hourly rate of compensation shall be determined as follows:

(A) In the case of an employee whose compensation is determined on the basis of an hourly rate, such hourly rate shall be the employee's most recent hourly rate of compensation.

(B) In the case of an employee whose compensation is determined on the basis of a fixed rate for specified periods of time (other than hours) such as days, weeks or months, the employee's hourly rate of compensation shall be the employee's most recent rate of compensation for a specified period of time (other than an hour), divided by the number of hours regularly scheduled for the performance of duties during such period of time. For purposes of the preceding sentence, in the case of an employee without a regular work schedule, the plan may provide for the calculation of the employee's hourly rate of compensation on the basis of a 40-hour workweek, an 8-hour workday, or may provide for such calculation on any reasonable basis which reflects the average hours worked by the employee over a representative period of time, provided that the basis so used is consistently applied with respect to all employees within the same job classifications, reasonably defined.

(C) In the case of an employee whose compensation is not determined on the basis of a fixed rate for specified periods of time, the employee's hourly rate of compensation shall be the lowest hourly rate of compensation paid to employees in the same job classification as that of the employee or, if no

employees in the same job classification have an hourly rate, the minimum wage as established from time to time under section 6(a)(1) of the Fair Labor Standards Act of 1938, as amended.

(iii) *Examples*. The following examples illustrate the rules in paragraph (b)(2) of this section without regard to paragraphs (b)(1) and (3).

(A) As a result of an injury, an employee is incapacitated for 5 weeks. A lump sum payment of $500 is made to the employee with respect to the injury under a disability insurance plan maintained by the employee's employer. At the time of the injury, the employee's rate of pay was $3.00 per hour. The employee must, therefore, be credited with 167 hours of service ($500 divided by $3.00 per hour).

(B) Same facts as in Example (A), above, except that at the time of the injury, the employee's rate of pay was $160 per week and the employee has a regular work schedule of 40 hours per week. The employee's hourly rate of compensation is, therefore, $4.00 per hour ($160 per week divided by 40 hours per week) and the employee must be credited with 125 hours of service for the period of absence ($500 divided by $4.00 per hour).

(C) An employee is paid at an hourly rate of $3.00 per hour and works a regular schedule of 40 hours per week. The employee is disabled for 26 weeks during a computation period. For the first 12 weeks of disability, the employee is paid his normal weekly earnings of $120 per week by the employer. Thereupon, a lump-sum disability payment of $1000 is made to the employee under a disability insurance plan maintained by the employer. Under paragraph (a)(3)(i) of this section, the employee is credited with 501 hours of service for the period of disability (lesser of 501 hours—the maximum number of hours required to be credited for a period of absence—or the sum of 12 weeks multiplied by 40 hours per week plus $1000 divided by $3.00 per hour).

(3) *Rule against double credit*. (i) Nothwithstanding paragraphs (b)(1) and (2) of this section, an employee is not required to be credited on account of a period during which no duties are performed with a number of hours of service which is greater than the number of hours regularly scheduled for the performance of duties during such period. For purposes of applying the preceding sentence in the case of an employee without a regular work schedule, a plan may provide for the calculation of the number of hours of service to be credited to the employee for a period during which no duties are performed on the basis of a 40-hour workweek or an 8-hour workday, or may provide for such calculation on any reasonable basis which reflects the average hours worked by the employee, or by other employees in the same job classification, over a representative period of time, provided that the basis so used is consistently applied with respect to all employees within the same job classifications, reasonably defined.

(ii) *Examples*. (A) Employee A has a regular 40-hour workweek. Each year Employee A is entitled to pay for a two-week vacation, in addition to receiving normal wages for all hours worked, regardless of whether A actually takes a vacation and regardless of the duration of his vacation. The vacation payments are, therefore, calculated on the basis of units of time (weeks). In computation period I, A takes no vacation but receives vacation pay. A is entitled to no credit for hours of service for the vacation payment made in computation period I because the payment was not made on account of a period during which no duties were performed. In computation period II, A takes a vacation of one week in duration, although receiving pay for a two-week vacation. A is entitled to be credited with 40 hours of service for his one-week vacation in computation period II even though paid for two weeks of vacation. In computation period III, A takes a vacation for a period lasting more than 2 weeks. A is entitled to be credited with 80 hours of service for his vacation in computation period III (40 hours per week multiplied by 2 weeks) even though the vacation lasted more than 2 weeks.

(B) Employee B has no regular work schedule. As a result of an injury, B is incapacitated for 1 day. A lump-sum payment of $500 is made to A with respect to the injury under an insurance program maintained by the employer.

A pension plan maintained by the employer provides for the calculation of the number of hours of service to be credited to an employee without a regular work schedule on the basis of an 8-hour day. A is therefore required to be credited with no more than 8 hours for the day during which he was incapacitated, even though A's rate of pay immediately before the injury was $3.00 per hour.

(c) *Crediting of hours of service to computation periods.* (1) Except as provided in paragraph (c)(4) of this section, hours of service described in paragraph (a)(1) of this section shall be credited to the computation period in which the duties are performed.

(2) Except as provided in paragraph (c)(4) of this section, hours of service described in paragraph (a)(2) of this section shall be credited as follows:

(i) Hours of service credited to an employee on account of a payment which is calculated on the basis of units of time, such as hours, days, weeks or months, shall be credited to the computation period or computation periods in which the period during which no duties are performed occurs, beginning with the first unit of time to which the payment relates.

(ii) Hours of service credited to an employee by reason of a payment which is not calculated on the basis of units of time shall be credited to the computation period in which the period during which no duties are performed occurs, or if the period during which no duties are performed extends beyond one computation period, such hours of service shall be allocated between not more than the first two computation periods on any reasonable basis which is consistently applied with respect to all employees within the same job classifications, reasonably defined.

(3) Except as provided in paragraph (c)(4) of this section, hours of service described in paragraph (a)(3) of this section shall be credited to the computation period or periods to which the award or agreement for back pay pertains, rather than to the computation period in which the award, agreement or payment is made.

(4) In the case of hours of service to be credited to an employee in connection with a period of no more than 31 days which extends beyond one computation period, all such hours of service may be credited to the first computation period or the second computation period. Crediting of hours of service under this paragraph must be done consistently with respect to all employees within the same job classifications, reasonably defined.

(5) *Examples.* The following examples are intended to illustrate paragraph (c)(4) of this section.

(i) An employer maintaining a plan pays employees on a bi-weekly basis. The plan designates the calendar year as the vesting computation period. The employer adopts the practice of crediting hours of service for the performance of duties during a bi-weekly payroll period to the vesting computation period in which the payroll period ends. Thus, when a payroll period ends on January 7, 1978, all hours of service to be credited to employees for the performance of duties during that payroll period are credited to the vesting computation period beginning on January 1, 1978. This practice is consistent with paragraph (c)(4) of this section, even though some hours of service credited to the computation period beginning on January 1, 1978, are attributable to duties performed during the previous vesting computation period.

(ii) An employer maintains a sick leave policy under which an employee is entitled to a certain number of hours of sick leave each year, on account of which the employee is paid his or her normal rate of compensation. An employee with a work schedule of 8 hours per day, 5 days per week, is sick from December 26, 1977 through January 4, 1978. Under the employer's sick leave policy, the employee is entitled to compensation for the entire period. A plan maintained by the employer establishes a calendar-year vesting computation period. The period from December 26, 1977 through December 31, 1977 includes 5 working days; the period from January 1, 1978 through January 4, 1978 includes 3 working days. Unless the plan adopts the alternative method for crediting service under paragraph (c)(4) of this section (illustrated in Example (iii), below) for the period of paid sick leave, the plan, pursuant to paragraph (c)(2)(i) of this section, must

credit the employee with 40 hours of service in the 1977 vesting computation period (5 days multiplied by 8 hours per day) and 24 hours of service in the 1978 vesting computation period (3 days multiplied by 8 hours per day).

(iii) Same facts as in Example (ii), above, except that the plan adopts the practice of crediting hours of service for sick leave and other periods of compensated absences to the vesting computation period in which the employer's bi-weekly payroll period ends. The employee returns to work on January 5, 1978 and works for 2 days. For the 2-week payroll period ending on January 8, 1978, the employee may be credited with 80 hours of service in the 1978 vesting computation period (64 hours of service for the paid sick leave and 16 hours of service for the 2 days during which duties were performed).

(d) *Other Federal law*. Nothing in this section shall be construed to alter, amend, modify, invalidate, impair or supersede any law of the United States or any rule or regulation issued under any such law. Thus, for example, nothing in this section shall be construed as denying an employee credit for an ''hour of service'' if credit is required by separate Federal law. Furthermore, the nature and extent of such credit shall be determined under such law.

(e) *Additional examples*. (1) During a computation period, an employee was paid for working 38¼ hours a week for 45 weeks. During the remaining 7 weeks of the computation period the employee was not employed by this employer. The employee completed 1,721¼ hours of service (45 weeks worked multiplied by 38¼ hours per week). The employer may also round up hours at the end of the computation period or more frequently. Thus, this employee could be credited with 1,722 hours of service (or, if the employer rounded up at the end of each week, 39 hours of service per week, resulting in credit for 1,755 hours of service).

(2) During a computation period, an employee was paid for a workweek of 40 hours per week for 40 weeks and, including overtime, for working 50 hours per week for 8 weeks. The employee completed 2,000 hours of service (40 weeks multiplied by 40 hours per week, plus 8 weeks worked multiplied by 50 hours per week).

(3) During a computation period an employee was paid for working 2 regularly scheduled 40-hour weeks and then became disabled. The employee was disabled through the remainder of the computation period and the following computation period. Throughout the period of disability, payments were made to the employee as follows: For the first month of the period of disability, the employer continued to pay the employee the employee's normal compensation at the same rate as before the disability occurred; thereupon, under the employer's disability insurance policy, payments were made to the employee in amounts equal to 80 percent of the employee's compensation before the disability. For the first computation period the employee is credited with 80 hours of service for the performance of duties (2 weeks multiplied by 40 hours per week) and 501 hours hours of service for the period of disability (the lesser of 501 hours of service or 50 weeks multiplied by 40 hours per week), or a total of 581 hours of service; for the second computation period the employee is credited with no hours of service because, under paragraph (a)(2)(i) of this section, the maximum of 501 hours of service has been credited for the period of disability in the first computation period.

(4) An employee has a regularly scheduled 5-day, 40-hour week. During a computation period the employee works for the first week, spends the second week on a paid vacation, returns to work for an hour and is then disabled for the remainder of the computation period. Payments under a disability plan maintained by the employer are made to the employee on account of the period of disability. The employee is credited with 582 hours of service for the computation period (40 hours for the period of paid vacation; 41 hours for the performance of duties; 501 hours for the period of disability).

(5) Same facts as in Example (4), above, except that the employee's period of disability begins before the employee returns from vacation to the performance of duties. The employee is credited with only 541 hours of service,

because the paid vacation and the disability together constitute a single, continuous period during which no duties were performed and, therefore, under paragraph (a)(2)(i) of this section, no more than 501 hours of service are required to be credited for such period.

(6) During a computation period, an employee worked 40 hours a week for the first 2 weeks. The employee then began serving on active duty in the Armed Forces of the United States, which service occupied the remaining 50 weeks of the computation period. The employee would be credited with 80 hours (2 weeks worked multiplied by 40 hours) plus such credit as may be prescribed by separate Federal laws relating to military service. The nature and extent of the credit that the employee receives upon his return and the purpose for which such credit is given, e.g., the percentage of his or her accrued benefits derived from employer contributions which are nonforfeitable (or vested), will depend upon the interpretation of the Federal law governing veterans' reemployment rights.

(f) *Plan document.* A plan which credits service on the basis of hours of service must state in the plan document the definition of hours of service set forth in paragraph (a) of this section, but is not required to state the rules set forth in paragraph (b) and (c) of this section if they are incorporated by reference.

§ 2530.200b–3 Determination of service to be credited to employees.

(a) *General rule.* For the purpose of determining the hours of service which must be credited to an employee for a computation period, a plan shall determine hours of service from records of hours worked and hours for which payment is made or due or shall use an equivalency permitted under paragraph (d), (e) or (f) of this section to determine hours of service. Any records may be used to determine hours of service to be credited to employees under a plan, even though such records are maintained for other purposes, provided that they accurately reflect the actual number of hours of service with which an employee is required to be credited under § 2530.200b–2(a). Payroll records, for example, may provide sufficiently accurate data to serve as a basis for determining hours of service. If, however, existing records do not accurately reflect the actual number of hours of service with which an employee is entitled to be credited, a plan must either develop and maintain adequate records or use one of the permitted equivalencies. A plan may in any case credit hours of service under any method which results in the crediting of no less than the actual number of hours of service required to be credited under § 2530.200b–2(a) to each employee in a computation period, even though such method may result in the crediting of hours of service in excess of the number of hours required to be credited under § 2530.200b–2. A plan is not required to prescribe in its documents which records are to be used to determine hours of service.

(b) *Determination of pre-effective date hours of service.* To the extent that a plan is required to determine hours of service completed before the effective date of part 2 of title I of the Act (see section 211 of the Act), the plan may use whatever records may be reasonably accessible to it and may make whatever calculations are necessary to determine the approximate number of hours of service completed before such effective date. For example, if a plan or an employer maintaining the plan has, or has access to, only the records of compensation of employees for the period before the effective date, it may derive the pre-effective date hours of service by using the hourly rate for the period or the hours customarily worked. If accessible records are insufficient to make an approximation of the number of pre-effective date hours of service for a particular employee or group of employees, the plan may make a reasonable estimate of the hours of service completed by such employee or employees during the particular period. For example, if records are available with respect to some employees, the plan may estimate the hours of other employees in the same job classification based on these records. A plan may use any of the equivalencies permitted under this section, or the elapsed time method of crediting service permitted under this

section, or the elapsed time method of crediting service permitted under § 2530.200b–9, to determine hours of service completed before the effective date of part 2 of title I of the Act.

(c) *Use of equivalencies for determining service to be credited to employees.* (1) The equivalencies permitted under paragraphs (d), (e) and (f) of this section are methods of determining service to be credited to employees during computation periods which are alternatives to the general rule for determining hours of service set forth in paragraph (a) of this section. The equivalencies are designed to enable a plan to determine the amount of service to be credited to an employee in a computation period on the basis of records which do not accurately reflect the actual number of hours of service required to be credited to the employee under § 2530.200b–2(a). However, the equivalencies may be used even if such records are maintained. Any equivalency used by a plan must be set forth in the document under which the plan is maintained.

(2) A plan may use different methods of crediting service, including equivalencies permitted under paragraphs (d), (e) and (f) of this section and the method of crediting service under the general rule set forth in § 2530.200b–2(a), for different classifications of employees covered under the plan or for different purposes, provided that such classifications are reasonable and are consistently applied. Thus, for example, a plan may provide that part-time employees are credited under the general method of crediting service set forth in § 2530.200b–2 and full-time employees are credited under a permissible equivalency. A classification, however, will not be deemed to be reasonable or consistently applied if such classification is designed with an intent to preclude an employee or employees from attaining statutory entitlement with respect to eligibility to participate, vesting or benefit accrual. For example, a classification applied so that any employee credited with less than 1,000 hours of service during a given 12-consecutive-month period would be considered part-time and subject to the general method of crediting service rather than an equivalency would not be reasonable.

(3) Notwithstanding paragraphs (c)(1) and (2) of this section, the use of a permissible equivalency for some, but not all, purposes or the use of a permissible equivalency for some, but not all, employees may, under certain circumstances, result in discrimination prohibited under section 401a of the Code, even though it is permitted under this section.

(d) *Equivalencies based on working time*—(1) *Hours worked.* A plan may determine service to be credited to an employee on the basis of hours worked, as defined in paragraph (d)(3)(i) of this section, if 870 hours worked are treated as equivalent to 1,000 hours of service and 435 hours worked are treated as equivalent to 500 hours of service.

(2) *Regular time hours.* A plan may determine service to be credited to an employee on the basis of regular time hours, as defined in paragraph (d)(3)(ii) of this section, if 750 regular time hours are treated as equivalent to 1,000 hours of service and 375 regular time hours are treated as equivalent to 500 hours of service.

(3) For purposes of this section:

(i) The term ''hours worked'' shall mean hours of service described in § 2530.200b–2(a)(1), and hours for which back pay, irrespective of mitigation of damages, is awarded or agreed to by an employer, to the extent that such award or agreement is intended to compensate an employee for periods during which the employee would have been engaged in the performance of duties for the employer.

(ii) The term ''regular time hours'' shall mean hours worked, except hours for which a premium rate is paid because such hours are in excess of the maximum workweek applicable to an employee under section 7(a) of the Fair Labor Standards Act of 1938, as amended, or because such hours are in excess of a bona fide standard workweek or workday.

(4) A plan determining service to be credited to an employee on the basis of hours worked or regular time hours shall credit hours worked or regular time hours, as the case may be, to computation periods in accordance with the rules for crediting hours of service

to computation periods set forth in § 2530.200b–2(c).

(5) *Examples*. (i) A defined benefit plan uses the equivalency based on hours worked permitted under paragraph (d)(1) of this section. The plan uses the same 12-consecutive-month period for the vesting and accrual computation periods. The plan credits a participant with each hour for which the participant is paid, or entitled to payment, for the performance of duties for the employer during a computation period (as well as each hour for which back pay is awarded or agreed to). During a vesting/accrual computation period Participant A is credited with 870 hours worked. A is credited with a year of service for purposes of vesting for the computation period and with at least a partial year of participation for purposes of accrual, as if A had been credited with 1000 hours of service during the computation period. During the same computation period Participant B is credited with 436 hours of service. B is not credited with a year of service for purposes of vesting or a partial year or paritcipation for purposes of accrual for the computation period, but does not incur a one-year break in service for the computation period, as if B had been credited with 501 hours of service during the computation period.

(ii) A plan uses the equivalency based on regular time hours permitted under paragraph (d)(2) of this section. During a computation period a participant works 370 regular time hours and 20 overtime hours. The participant incurs a one-year break in service for the computation period because he has not been credited with 375 regular time hours in the computation period.

(e) *Equivalencies based on periods of employment*. (1) Except as provided in paragraphs (e)(4) and (6) of this section, a plan may determine the number of hours of service to be credited to employees in a computation period on the following bases:

(i) On the basis of days of employment, if an employee is credited with 10 hours of service for each day for which the employee would be required to be credited with at least one hour of service under § 2530.200b–2;

(ii) On the basis of weeks of employment, if an employee is credited with 45 hours of service for each week for which the employee would be required to be credited with at least one hour of service under § 2530.200b–2;

(iii) On the basis of semi-monthly payroll periods, if an employee is credited with 95 hours of service for each semi-monthly payroll period for which the employee would be required to be credited with at least one hour of service under § 2530.200b–2; or

(iv) On the basis of months of employment, if an employee is credited with 190 hours of service for each month for which the employee would be required to be credited with at least one hour of service under § 2530.200 b–2.

(2) Except as provided in paragraphs (e)(4) and (6) of this section, a plan may determine the number of hours of service to be credited to employees in a computation period on the basis of shifts if an employee is credited with the number of hours included in a shift for each shift for which the employee would be required to be credited with at least one hour of service under § 2530.200b–2. if a plan uses the equivalency based on shifts permitted under this paragraph, the times of the beginning and end of each shift used as a basis for the determination of service shall be set forth in a document referred to in the plan.

(3) *Examples*. The following examples illustrate the application of paragraphs (e)(1) and (2) of this section;

(i) A plan uses the equivalency based on weeks of employment permitted under paragraph (e)(1)(ii) of this section. An employee works for one hour on the first workday of a week and then takes leave without pay for the entire remainder of the week. The plan must credit the employee with 45 hours of service for the week.

(ii) A plan uses the equivalency based on weeks of employment permitted under paragraph (e)(1)(ii) of this section. An employee spends a week on vacation with pay. The plan must credit the employee with 45 hours of service for the week.

(iii) A plan uses the equivalency based on weeks of employment permitted under paragraph (e)(1)(ii) of this section. An employee spends two days of a week on vacation with pay and the

remainder of the week on leave without pay. The plan must credit the employee with 45 hours of service for the week.

(iv) A plan uses the equivalency based on weeks of employment permitted under paragraph (e)(1)(ii) of this section. An employee spends the entire week on leave without pay. The plan is not required to credit the employee with any hours of service for the week because no payment was made to the employee for the week of leave and, therefore, under § 2530.200b–2 no hours of service would be credited to the employee for the week of leave.

(v) The workday of an employer maintaining a plan is scheduled in shifts. Ordinarily, each shift is 6 hours in duration. At certain times, however, the employer schedules 8-hour shifts in order to meet increased demand. Such shifts are described in a collective bargaining agreement referred to in the plan documents. The plan must credit an employee with 6 hours of service for each 6-hour shift for which the employee would be credited with one hour of service under § 2530.200b–2, and with 8 hours of service for each such 8-hour shift.

(vi) An employer's workday is divided into three 8-hour shifts, each employee generally working 5 shifts per week. A plan maintained by the employer uses the equivalency based on shifts permitted under paragraph (e)(2) of this section. An employee is on vacation with pay for 2 weeks, during which, in the ordinary course of his work schedule, he would have worked 10 shifts. The employee must be credited with 80 hours of service for the vacation (10 shifts multiplied by 8 hours per shift).

(vii) An employer's workday is divided into three 8-hour shifts, each employee generally working 1 shift per workday. A plan maintained by the employer uses the equivalency based on shifts permitted under paragraph (e)(2) of this section. On a certain day, an employee works his normal 8-hour shift and an hour during the following shift. In addition to 8 hours service for the first shift, the employee must be credited with 8 hours of service for the following shift, since he would be entitled to be credited with at least one hour of service for the second shift under § 2530.200b–2.

(viii) A plan uses the equivalency based on days permitted under paragraph (e)(1)(i) of this section. During a computation period an employee spends 2 weeks on vacation with pay. In the ordinary course of the employee's regular work schedule, the employee would be engaged in the performance of duties for 10 days during the 2-week vacation period. Under § 2530.200b–2, the employee would be credited with at least one hour of service for each of the 10 days during the 2-week vacation for which the employee would ordinarily be engaged in the performance of duties. Under paragraph (e)(4) of this section, the employee is credited with 100 hours of service for the 2-week vacation (10 days multiplied by 10 hours of service per day).

(4) For purposes of this paragraph, in the case of a payment described in § 2530.200b–2(b)(2) (relating to payments not calculated on the basis of units of time), a plan using an equivalency based on units of time permitted under this paragraph shall credit the employee with the number of hours of service determined under paragraph (2) of § 2530.200b–2(b), and, to the extent applicable, paragraph (e)(3), containing the rule against double crediting, of § 2530.200b–2(b). For example, if an employee with a regular work schedule of 40 hours per week paid at a rate of $3.00 per hour is incapacitated for a period of 4 weeks and receives a lump sum payment of $500 for his incapacity, the employee must be credited with 160 hours of service for the period of incapacity, regardless of whether the plan uses an equivalency permitted under this paragraph (*see* example at § 2530.200b–2(b)(2)(iii)(A). If, however, the employee is incapacitated for only 3 weeks, under § 2530.200b–2(b)(3) the emmployee is not required to be credited with more than 120 hours of service (lesser of 167 hours of service determined under the preceding sentence or 3 weeks multiplied by 40 hours per week).

(5) For purposes of this paragraph, in the case of a payment to an employee calculated on the basis of units of time which are greater than the periods of employment used by a plan as a basis

for determining service to be credited to the employee under this paragraph, the plan shall credit the employee with the number of periods of employment which, in the course of the employee's regular work schedule, would be included in the unit or units of time on the basis of which the payment is calculated. For example, a plan uses the equivalency based on days permitted under paragraph (e)(1)(i) of this section. During a computation period an employee spends 2 weeks on vacation with pay. In the ordinary course of the employee's regular work schedule, the employee would be engaged in the performance of duties for 10 days during the 2-week vacation period. Under § 2530.200b–2, the emplopyee would be credited with at least one hour of service for each of the 10 days during the 2-week vacation for which the employee would ordinarily be engaged in the performance of duties. Under this paragraph the employee is credited with 100 hours of service for the 2-week vacation (10 days multiplied by 10 hours of service per day). If, however, the employee, although paid for a 2-week vacation, spends only one week on vacation, under § 2530.200b–2(b)(3) the employee is not required to be credited with more than 50 hours of service (5 days multiplied by 10 hours per day).

(6) For purposes of this paragraph, in the case of periods of time used as a basis for determining service to be credited to an employee which extend into two computation periods, the plan may credit all hours of service (or other units of service) credited for such a period to the first computation period or the second computation period, or may allocate such hours of service (or other units of service) between the two computation periods on a pro rata basis. Crediting of service under this paragraph must be done consistently with respect to all employees within the same job classifications, reasonably defined.

(7) A plan may combine an equivalency based on working time permitted under paragraph (d) of this section (*i.e.*, hours worked or regular time hours) with an equivalency based on periods of employment permitted under this paragraph if the following conditions are met:

(i) The plan credits an employee with the number of hours worked or regular time hours, as the case may be, equal to the number of hours of service which would be credited to the employee under paragraphs (e)(1) and (2) of this section, for each period of employment for which the employee would be credited with one hour worked or one regular time hour; and

(ii) The plan treats hours worked and regular time hours in the manner prescribed under paragraphs (d)(1) and (2) of this section.

(8) *Example.* The following example illustrates the application of paragraph (e)(7) of this section. A plan uses the equivalency based on weeks of employment permitted under paragraph (e)(1)(ii) of this section in conjunction with the equivalency based on hours worked permitted under paragraph (d)(1) of this section, as provided in paragraph (e)(7) of this section. During a vesting computation period an employee is paid for the performance of duties for at least 1 hour in each of the first 20 weeks of the computation period and spends the next 2 weeks on a paid vacation. The employee thereupon terminates employment performing no further duties for the employer, and receiving no further compensation in the computation period. The employee is therefore credited with 900 hours worked for the vesting computation period (20 weeks multiplied by 45 hours per week), receiving no credit for the two weeks of paid vacation. The employee is credited with a year of service for the vesting computation period because he has been credited with more than 870 hours for the computation period.

(f) *Equivalencies based on earnings.* (1) In the case of an employee whose compensation is determined on the basis of an hourly rate, a plan may determine the number of hours to be credited the employee in a computation period on the basis of earnings, if:

(i) The employee is credited with the number of hours equal to the total of the employee's earnings from time to time during the computation period divided by the employee's hourly rate as

in effect at such times during the computation period, or equal to the employee's total earnings for the performance of duties during the computation period divided by the employee's lowest hourly rate of compensation during the computation period, or by the lowest hourly rate of compensation payable to an employee in the same, or a similar job classification, reasonably defined; and

(ii) 870 hours credited under paragraph (f)(1)(i) of this section are treated as equivalent to 1,000 hours of service, and 435 hours credited under paragraph (f)(1)(i) of this section are treated as equivalent to 500 hours of service.

For purposes of this paragraph (f)(1), a plan may divide earnings at premium rates for overtime by the employee's hourly rate for overtime, rather than the regular time hourly rate.

(2) In the case of an employee whose compensation is determined on a basis other than an hourly rate, a plan may determine the number of hours to be credited to the employee in a computation period on the basis of earnings if:

(i) The employee is credited with the number of hours equal to the employee's total earnings for the performance of duties during the computation period divided by the employee's lowest hourly rate of compensation during the computation period, determined under paragraph (f)(3) of this section; and

(ii) 750 hours credited under paragraph (f)(2)(i) of this section are treated as equivalent to 1,000 hours of service, and 375 hours credited under paragraph (f)(2)(i) of this section are treated as equivalent to 500 hours of service.

(3) For purposes of paragraph (f)(2) of this section, an employee's hourly rate of compensation shall be determined as follows:

(i) In the case of an employee whose compensation is determined on the basis of a fixed rate for a specified period of time (other than an hour) such as a day, week or month, the employee's hourly rate of compensation shall be the employee's lowest rate of compensation during a computation period for such specified period of time divided by the number of hours regularly scheduled for the performance of duties during such period of time. For purposes of the preceding sentence, in the case of an employee without a regular work schedule, the plan may provide for the calculation of the employee's hourly rate of compensation on the basis of a 40-hour workweek or an 8-hour workday, or may provide for such calculation on any reasonable basis which reflects the average hours worked by the employee over a representative period of time, provided that the basis so used is consistently applied to all employees within the same job classifications, reasonably defined.

(ii) In the case of an employee whose compensation is not determined on the basis of a fixed rate for a specified period of time, the employee's hourly rate of compensation shall be the lowest hourly rate of compensation payable to employees in the same job classification as the employee, or, if no employees in the same job classification have an hourly rate, the minimum wage as established from time to time under section 6(a)(1) of the Fair Labor Standards Act of 1938, as amended.

(4) *Examples*. (i) In a particular job classification employees' wages range from $3.00 per hour to $4.00 per hour. To determine the number of hours to be credited to an employee in that job classification who is compensated at a rate of $4.00 per hour, a plan may divide the employee's total earnings during the computation period for the performance of duties either by $3.00 per hour (the lowest hourly rate of compensation in the job classification) or by $4.00 per hour (the employee's own hourly rate of compensation).

(ii) An hourly employee's total earnings for the performance of duties during a vesting computation period amount to $4,350. During that calendar year, the employee's lowest hourly rate of compensation was $5.00 per hour. The plan may determine the number of hours to be credited to the employee for that vesting computation period by dividing $4,350 by $5.00 per hour. The employee is credited with 870 hours for the vesting computation period and is, therefore, credited with a year of service for purposes of vesting.

(iii) During the first 3 months of a vesting computation period an hourly employee is paid at a rate of $3.00 per

hour and earns $675 for the performance of duties; during the next 6 months, the employee is paid at a rate of $3.50 per hour and earns $1,575 for the performance of duties; during the final 3 months the employee is paid at a rate of $3.60 per hour and earns $810 for the performance of duties. The plan may determine the number of hours to be credited to the employee in the computation period under the equivalency set forth in paragraph (f)(1) of this section either (A) by dividing the employee's earnings for each period during which the employee was paid at a separate rate ($675 divided by $3.00 per hour equals 225 hours; $1,575 divided by $3.50 per hour equals 450 hours; $810 divided by $3.60 per hour equals 225 hours) and adding the hours so obtained (900 hours), or (B) by dividing the employee's total compensation for the vesting computation period by the employee's lowest hourly rate during the computation period ($3,020 divided by $3.00 per hour equals 1,009⅔ hours). The plan may also divide the employee's total compensation during the computation period by the lowest hourly rate payable to an employee in the same, or a similar, job classification.

(iv) During a plan's computation period an hourly employee's total earnings for the performance of duties consist of $7,500 at a basic rate of $5.00 per hour and $750 at an overtime rate of $7.50 per hour for hours worked in excess of 40 in a week. If the plan uses the equivalency permitted under paragraph (f)(1) of this section, the plan may adjust for the overtime rate in calculating the number of hours to be credited to the employee. Thus, the plan may calculate the number of hours to be credited to the employee by adding the employee's earnings at the basic rate divided by the basic rate and the employee's earnings at the overtime rate divided by the overtime rate ($7,500 divided by $5.00 per hour, plus $750 divided by $7.50 per hour, or 1,500 hours plus 100 hours), resulting in credit for 1,600 hours for the computation period.

(v) During a plan's vesting computation period an employee's lowest weekly rate of compensation is $400 per week. The employee has a regular work schedule of 40 hours per week. The employee's lowest hourly rate during the vesting computation period is, therefore, $10 per hour ($400 per week divided by 40 hours per week). During the vesting computation period, the employee receives a total of $7,500 for the performance of duties. The plan determines the number of regular time hours to be credited to the employee for the computation period by dividing $7,500 by $10 per hour. The employee is credited with 750 hours for the computation period and is, therefore, credited with a year of service for purposes of vesting.

§ 2530.200b–4 One-year break in service.

(a) *Computation period.* (1) Under sections 202(b) and 203(b)(3) of the Act and sections 410(a)(5) and 411(a)(6) of the Code, a plan may provide that an employee incurs a one-year break in service for a computation period or periods if the employee fails to complete more than 500 hours of service or, in the case of any maritime industry, 62 days of service in such period or periods.

(2) For purposes of section 202(b) of the Act and section 410(a)(5) of the Code, relating to one-year breaks in service for eligibility to participate, in determining whether an employee incurs a one-year break in service, a plan shall use the eligibility computation period designated under § 2530.202–2(b) for measuring years of service after the intital eligibility computation period.

(3) For purposes of section 203(b)(3) of the Act and section 411(a)(6) of the Code, relating to breaks in service for purposes of vesting, in determining whether an employee incurs a one-year break in service, a plan shall use the vesting computation period designated under § 2530.203–2(a).

(4) For rules regarding service which is not required to be taken into account for purposes of benefit accrual, see § 2530.204–1(b)(1).

(b) *Service following a break in service.* (1) For purposes of section 202(b)(3) of the Act and section 410(a)(5)(C) of the Code (relating to completion of a year of service for eligibility to participate after a one-year break in service), the following rules shall be applied in measuring completion of a year of

service upon an employee's return after a one-year break in service:

(i) In the case of a plan which, after the initial eligibility computation period, measures years of service for purposes of eligibility to participate on the basis of eligibility computation periods beginning on anniversaries of an employee's employment commencement date, as permitted under § 2530.202–2(b)(1), the plan shall use the 12-consecutive-month period beginning on an employee's reemployment commencement date (as defined in paragraphs (b)(1)(iii) and (iv) of this section) and, where necessary, subsequent 12-consecutive-month periods beginning on anniversaries of the reemployment of commencement date.

(ii) In the case of a plan which, after the initial eligibility computation period, measures years of service for eligibility to participate on the basis of plan years beginning with the plan year which includes the first anniversary of the initial eligibility computation period, as permitted under § 2530.202–2(b)(2), the plan shall use the 12-consecutive-month period beginning on an employee's reemployment commencement date (as defined in paragraphs (b)(1)(iii) and (iv) of this section and, where necessary, plan years beginning with the plan year which includes the first anniversary of the employee's reemployment commencement date.

(iii) Except as provided in paragraph (b)(1)(iv) of this section, an employee's reemployment commencement date shall be the first day on which the employee is entitled to be credited with an hour of service described in § 2530.200b–2(a)(1) after the first eligibility computation period in which the employee incurs a one-year break in service following an eligibility computation period in which the employee is credited with more than 500 hours of service.

(iv) In the case of an employee who is credited with no hours of service in an eligibility computation period beginning after the employee's reemployment commencement date established under paragraph (b)(1)(iii) of this section, the employee shall be treated as having a new reemployment commencement date as of the first day on which the employee is entitled to be credited with an hour of service described in § 2530.200b–2(a)(1) after such eligibility computation period.

(2) For purposes of section 203(b)(3)(B) of the Act and section 411(a)(6)(B) of the Code (relating to the completion of a year of service for vesting following a one-year break in service), in measuring completion of a year of service upon an employee's return after a one-year break in service, a plan shall use the vesting computation period designated under § 2530.203–2. In the case of a plan which designates a separate vesting computation period for each employee (rather than one vesting computation period for all employees), when an employee who has incurred a one-year break in service later completes an initial hour of service, the plan may change the employee's vesting computation period to a 12-consecutive-month period beginning on the day on which such initial hour of service is completed, provided that the plan follows the rules for changing the vesting computation period set forth in § 2530.203–2(c)(1). Specifically, such a plan must ensure that as a result of the change of the vesting computation period of an employee who has incurred a one-year break in service to the 12-month period beginning on the first day on which the employee later completes an initial hour of service, the employee's vested percentage of the accrued benefit derived from employer contributions will not be less on any date after the change than such nonforfeitable percentage would be in the absence of the change. As under § 2530.203–2(c)(1), the plan will be deemed to satisfy the requirement of that paragraph if, in the case of an employee who has incurred a one-year break in service, the vesting computation period beginning on the day on which the employee completes an hour of service after the one-year break in service begins before the end of the last vesting computation period established before the change of vesting computation periods and, if the employee is credited with 1000 hours of service in both such vesting computation periods, the employee is credited with 2 years of service for purposes of vesting.

(3) For purposes of section 203(b)(3)(B) of the Act and section 411(a)(6)(B) of

the Code (relating to the completion of a year of service for vesting following a one-year break in service), in measuring completion of a year of service upon an employee's return after a one-year break in service, a plan shall use the vesting computation period designated under § 2530.203–2. In the case of a plan which designates a separate vesting computation period for each employee (rather than one vesting computation period for all employees), when an employee who has incurred a one-year break in service later completes an initial hour of service, the plan may change the employee's vesting computation period to a 12-consecutive-month period beginning on the day on which such initial hour of service is completed, provided that the plan follows the rules for changing the vesting computation period set forth in § 2530.203–2(c)(1).

(4) *Examples*. (i) Employer X maintains a pension plan. The plan uses a calendar year vesting computation period and plan year. As conditions for participation, the plan requires that an employee of X complete one year of service and attain age 25, and, in accordance with § 2530.202–2(b)(2), provides that after the initial eligibility computation period, plan years will be used as eligibility computation periods, beginning with the plan year which includes the first anniversary of an employee's employment commencement date. Thus, under paragraph (a)(2) of this section, the plan must use plan years in measuring one-year breaks in service for eligibility to participate. The plan provides that an employee acquires a nonforfeitable right to 100 percent of the accrued benefit derived from employer contributions upon completion of 10 years of service. Under the plan, for purposes of vesting, years of service completed before an employee attains age 22 are not taken into account. The plan also provides that if an employee has incurred a one-year break in service, in computing the employee's period of service for eligibility to participate, years of service before such break will not be taken into account until the employee has completed a year of service with X after the employee's return. The plan further provides that in the case of an employee who has no vested right to an accrued benefit derived from employer contributions, years of service for purposes of eligibility to participate or vesting before a one-year break in service for eligibility or vesting (as the case may be) shall not be required to be taken into account if the number of consecutive one-year breaks in service equals or exceeds the aggregate number of such years of service before such consecutive one-year breaks in service.

(A) Employee A commences employment with X on January 1, 1976 at age 30 and completes a year of service for eligibility to participate and vesting in both the 1976 and 1977 computation periods. A becomes a participant in the plan on January 1, 1977. A terminates employment with X on November 3, 1977, after completing 1,000 hours of service; completes no hours of service in 1978, incurring a one-year break in service; and is reemployed by X on June 1, 1979. A completes 800 hours of service during the remainder of 1979 and 600 hours of service from January 1, 1980 through May 31, 1980. Under paragraph (b)(1)(iii) of this section, A's reemployment commencement date is June 1, 1979. By June 1, 1980, A has completed a year of service during the eligibility computation period following his return, and receives credit for his pre-break service to the extent required under section 202 of the Act and section 410 of the Code and the regulations thereunder. The plan is not, however, required to credit A with a year of service for vesting during 1979 because he failed to complete 1,000 hours of service during that vesting computation period. If A completes 400 or more hours of service from June 1, 1980 to December 31, 1980, then A will be credited with one year of service for vesting purposes for the 1980 vesting computation period.

(B) Employee B was born on February 22, 1955 and commenced employment with Employer X on July 1, 1975. B is credited with a year of service for eligibility to participate in the plan for the eligibility computation period beginning on his employment commencement date (July 1, 1975) and a year of service for eligibility and vesting for the 1976 and 1977 plan years. As of the end of the 1977 plan year, B is credited

with 3 years of service for purposes of eligibility to participate, but only one year of service for purposes of vesting. Not having attained age 25, however, B is not admitted to participation in the plan upon completion of his first year of service with X. In the 1978 plan year, B fails to be credited with 500 hours of service, thereby incurring a one-year break in service. As a result of B's one-year break in service in the 1978 plan year, the year of service for vesting which was earlier credited to B for the 1977 plan year is disregarded because the one-year break in service equals the one year of service credited to B before the one-year break in service. After the end of the 1978 plan year, B does not perform an hour of service with X until February 3, 1979. February 3, 1979, therefore, is B's reemployment commencement date under paragraph (b)(1)(i) of this section. B fails to be credited with 1,000 hours of service in the first eligibility computation period beginning on February 3, 1979, and also for the vesting computation period beginning January 1, 1979. Because, in accordance with § 2530.202–2(b)(2), the plan provides that after the initial eligibility computation period, plan years will be used as eligibility computation periods, under paragraph (b)(1)(ii) of this section the plan must provide that, in measuring completion of a year of service for eligibility to participate after a one-year break in service, plan years beginning with the plan year which includes an employee's reemployment commencement date will be used. B is credited with 1,000 hours of service for the plan year beginning on January 1, 1980 and is therefore credited with a year of service for the 1980 plan year. Under section 202(b)(3) of the Act and section 410(a)(5)(C) of the Code, as a consequence of B's completion of a year of service in the 1980 plan year, B's service before his one-year break in service in the 1978 plan year must be taken into account for eligibility purposes. As conditions of participation, the plan requires that an employee attain age 25 and complete one year of service. Upon his completion of a year of service for the 1980 plan year, B is deemed to have met the plan's participation requirements as of February 22, 1980, his twenty-fifth birthday, because the year of service completed by B in B's eligibility computation period beginning on January 1, 1976 is taken into account for eligibility purposes.

(ii) Employer Y maintains a defined benefit pension plan. The plan provides that an employee acquires a nonforfeitable right to 100 percent of the employee's accrued benefit derived from employer contributions upon completion of 10 years of service. As conditions for participation, the plan requires that an employee of Y complete one year of service and provides that if an employee has incurred a one-year break in service, in computing the employee's period of service for eligibility to participate, years of service before such break will not be taken into account until the employee has completed a year of service with Y after the employee's return. In accordance with § 2530.202–2(b)(1), the plan provides that after the initial eligibility computation period, eligibility computation periods beginning on anniversaries of an employee's employment commencement date will be used. Thus, under paragraph (a)(1) of this section, the plan must use computation periods beginning on anniversaries of the employee's employment commencement date in measuring one-year breaks in service. Employee C's employment commencement date with Y is February 1, 1975, C is credited with a year of service for eligibility to participate in the eligibility computation period beginning on C's employment commencement date and meets the plan's eligibility requirements as of February 1, 1976. In accordance with the provisions of the plan, C commences participation in the plan as of July 1, 1976. C is thereafter credited with a year of service for eligibility to participate in each of the eligibility computation periods beginning on anniversaries of C's employment commencement date (February 1) in 1976, 1977, 1978 and 1979. Thus, as of February 1, 1980, C is credited with 5 years of service for eligibility to participate. In the eligibility computation period beginning on February 1, 1980, C fails to be credited with more than 500 hours of service and therefore incurs a one-year break in service. In the eligibility computation

period beginning on February 1, 1981, C is not credited with an hour of service for the performance of duties until March 1, 1981. Under paragraph (b)(1)(iii) of this section, March 1, 1981 is C's reemployment commencement date. C terminates employment with Y on May 1, 1981 and fails to be credited with 1000 hours of service in the 12-consecutive-month period beginning on March 1, 1981, or with more than 500 hours of service in the eligibility computation period beginning on February 1, 1981, thereby incurring a second one-year break in service for eligibility to participate. C is credited with no hours of service in the eligibility computation period beginning on February 1, 1982, thereby incurring a third one-year break in service for eligibility to participate, and is likewise credited with no hours of service in the 12-consecutive-month period beginning on March 1, 1982, the anniversary of B's reemployment commencement date. Under paragraph (b)(1)(iv) of this section, C must therefore be treated as having a new reemployment commencement date as of the first day following the close of the eligibility computation period beginning on February 1, 1982. On January 1, 1984 (before the end of the eligibility computation period beginning February 1, 1983) C is rehired by Y and is credited with an hour of service for the performance of duties. C is therefore treated as having a new reemployment commencement date January 1, 1984. C fails to be credited with more than 500 hours of service in the eligibility computation period beginning on February 1, 1983, thereby incurring a fourth one-year break in service, and fails to be credited with 1000 hours of service in the 12-consecutive-month period beginning on March 1, 1983, the anniversary of C's original reemployment commencement date. However, in the 12-consecutive-month period beginning on January 1, 1984, C is credited with 1000 hours of service, thus meeting the plan's requirement that an employee who has incurred a one-year break in service for eligibility to participate must complete a year of service upon the employee's return in order for years of service before the one-year break in service to be taken into account for purposes of eligibility. Because C's years of service completed before C's first one-year break in service must be taken into account under section 202(b) of the Act and section 410(b)(5) of the Code for purposes of eligibility to participate, under § 2530.204–2(a)(2) the period beginning on July 1, 1976 (the earliest date on which C was a participant) and extending until January 31, 1980 (the last day before C's first one-year break in service) must be taken into account for purposes of benefit accrual.

(c) *Prior service for eligibility to participate.* For rules relating to computing service preceding a break in service for the purpose of eligibility to participate in the plan, see § 2530.202–2(c).

(d) *Prior service for vesting.* For rules relating to computing service preceding a break in service for the purpose of credit toward vesting, see § 2530.203–2(d).

§ 2530.200b–5 Seasonal industries. [Reserved]

§ 2530.200b–6 Maritime industry.

(a) *General.* Sections 202(a)(3)(D), 203(b)(2)(D) and 204(b)(3)(E) of the Act and sections 410(a)(3)(D) and 411(a)(5)(D) and (b)(3)(E) of the Code contain special provisions applicable to the maritime industry. In general, those provisions permit statutory standards otherwise expressed in terms of 1,000 hours of service to be applied to employees in the maritime industry as if such standards were expressed in terms of 125 days of service. A plan covering employees in the maritime industry may nevertheless credit service to such employees on the basis of hours of service, as prescribed in § 2530.200b–2, including the use of any equivalency permitted under § 2530.200b–3, or may credit service to such employees on the basis of elapsed time, as permitted under § 2530.200b–9.

(b) *Definition.* For purposes of sections 202, 203, and 204 of the Act and sections 410 and 411 of the Code, the maritime industry is that industry in which employees perform duties on board commercial, exploratory, service or other vessels moving on the high seas, inland waterways, Great Lakes,

coastal zones, harbors and noncontiguous areas, or on offshore ports, platforms or other similar sites.

(c) *Computation periods.* For employees in the maritime industry, computation periods shall be established as for employees in any other industry.

(d) *Year of service.* To the extent that a plan covers employees engaged in the maritime industry, and credits service for such employees on the basis of days of service, such employees who are credited with 125 days of service in the applicable computation period must be credited with a year of service. In the case of a plan covering both employees engaged in the maritime industry and employees not engaged in the maritime industry, service of employees not engaged in the maritime industry shall not be determined on the basis of days of service.

(e) *Year of participation for benefit accrual.* A plan covering employees engaged in the maritime industry may determine such an employee's period of service for purposes of benefit accrual on any basis permitted under §§ 2530.204–2 and 2530.204–3. For purposes of § 2530.204–2(c) (relating to partial years of participation), in the case of an employee engaged in the maritime industry who is credited by the plan on the basis of days of service and whose service is not less than 125 days of service during an accrual computation period, the calculation of such employee's period of service for purposes of benefit accrual shall be treated as not made on a reasonable and consistent basis if service during such computation period is not taken into account. Thus, the employee must be credited with at least a partial year of participation (but not necessarily a full year of participation) for that accrual computation period, in accordance with § 2530.204–2(c).

(f) *Employment commencement date.* For purposes of § 2530.200b–4 (relating to breaks in service) and § 2530.202–2 (relating to eligibility computation periods):

(1) The employment commencement date of an employee engaged in the maritime industry who is credited by the plan on the basis of days of service shall be the first day for which the employee is entitled to be credited with a day of service described in § 2530.200b–7(a)(1).

(2)(i) Except as provided in paragraph (f)(2)(ii) of this section, the reemployment commencement date of an employee engaged in the maritime industry shall be the first day for which the employee is entitled to be credited with a day of service described in § 2530.200b–7(a)(1) after the first eligibility computation period in which the employee incurs a 1-year break in service following an eligibility computation period in which the employee is credited with more than 62 days of service.

(ii) In the case of an employee engaged in the maritime industry who is credited with no hours of service in an eligibility computation period beginning after the employee's reemployment commencement date established under paragraph (f)(2)(i) of this section, the employee shall be treated as having a new reemployment commencement date as of the first day for which the employee is entitled to be credited with day of service described in § 2530.200b–7(a)(1) after such eligibility computation period.

§ 2530.200b–7 Day of service for employees in the maritime industry.

(a) *General rule.* A day of service in the maritime industry which must, as a minimum, be counted for the purposes of determining a year of service, a year of participation for benefit accrual, a break in service and an employment commencement date (or reemployment commencement date) under sections 202, 203 and 204 of the Act and sections 410 and 411 of the Code by a plan that credits service by days of service rather than hours of service (as prescribed in § 2530.200b–2, or under equivalencies permitted under § 2530.200b–3) or elapsed time (as permitted under § 2530.200b–9), is a day of service as defined in paragraphs (a)(1), (2) and (3) of this section.

(1) A day of service is each day for which an employee is paid or entitled to payment for the performance of duties for the employer during the applicable computation period.

(2) A day of service is each day for which an employee is paid, or entitled

to payment, by the employer on account of a period of time during which no duties are performed (irrespective of whether the employment relationship has terminated) due to vacation, holiday, illness, incapacity (including disability), layoff, jury duty, military duty or leave of absence. Notwithstanding the preceding sentence:

(i) No more than 63 days of service are required to be credited under this paragraph (a)(2) to an employee on account of any single continuous period during which the employee performs no duties (whether or not such period occurs in a single computation period);

(ii) A day for which an employee is directly or indirectly paid, or entitled to payment, on account of a period during which no duties are performed is not required to be credited to the employee if such payment is made or due under a plan maintained solely for the purpose of complying with applicable workmen's compensation (including maintenance and care), or unemployment compensation or disability insurance laws; and

(iii) Days of service are not required to be credited for a payment which solely reimburses an employee for medical or medically related expenses incurred by the employee.

For purposes of this paragraph (a)(2), a payment shall be deemed to be made by or due from an employer regardless of whether such payment is made by or due from the employer directly, or indirectly through, among others, a trust, fund, or insurer, to which the employer contributes or pays premiums, and regardless of whether contributions made or due to the trust, fund, insurer or other entity are for the benefit of particular employees or are made on behalf of a group of employees in the aggregate.

(3) A day of service is each day for which back pay, irrespective of mitigation of damages, has been either awarded or agreed to by the employer. Days of service shall not be credited both under paragraph (a)(1) or paragraph (a)(2), as the case may be, and under this subparagraph. Thus, for example, an employee who receives a back pay award following a determination that he or she was paid at an unlawful rate for days of service previously credited will not be entitled to additional credit for the same days of service. Crediting of days of service for back pay awarded or agreed to with respect to periods described in paragraph (a)(2) shall be subject to the limitations set forth in that paragraph. For example, no more than 63 days of service are required to be credited for payments of back pay, to the extent that such back pay is agreed to or awarded for a period of time during which an employee did not or would not have performed duties.

(b) *Special rule for determining days of service for reasons other than the performance of duties.* In the case of a payment which is made or due on account of a period during which an employee performs no duties, and which results in the crediting of days of service under paragraph (a)(3) of this section, or, in the case of an award or agreement for back pay, to the extent that such award or agreement is made with respect to a period described in paragraph (a)(2) of this section, the number of days of service to be credited shall be determined as follows:

(1) *Payments calculated on the basis of units of time.* In the case of a payment made or due which is calculated on the basis of units of time, such as days, weeks or months, the number of days of service to be credited shall be the number of regularly scheduled working days included in the units of time on the basis of which the payment is calculated. For purposes of the preceding sentence, in the case of an employee without a regular work schedule, a plan may provide for the calculation of the number of days of service to be credited on the basis of a 5-day workweek, or may provide for such calculation on any reasonable basis which reflects the average days worked by the employee, or by other employees in the same job classification, over a representative period of time, provided that the basis so used is consistently applied with respect to all employees within the same job classifications, reasonably defined.

(2) *Payments not calculated on the basis of units of time.* Except as provided in paragraph (b)(3) of this section, in the case of a payment made or due, which is not calculated on the basis of units of time, the number of days of service

to be credited shall be equal to the amount of the payment divided by the employee's most recent daily rate of compensation before the period during which no duties are performed.

(3) *Rule against double credit*. Notwithstanding paragraphs (b)(1) and (2) of this section, an employee is not required to be credited on account of a period during which no duties are performed with a number of days of service which is greater than the number of days regularly scheduled for the performance of duties during such period. For purposes of the preceding sentence, in the case of an employee without a regular work schedule, a plan may provide for the calculation of the number of days of service to be credited to the employee for a period during which no duties are performed on the basis of a 5-day workweek, or may provide for such calculation on any reasonable basis which reflects the average hours worked by the employee, or by other employees in the same job classification, over a representative period of time, provided that the basis so used is consistently applied with respect to all employees in the same job classifications, reasonably defined.

(c) *Crediting of days of service to computation periods*. (1) Except as provided in paragraph (c)(4) of this section, days of service described in paragraph (a)(1) of this section shall be credited to the computation period in which the duties are performed.

(2) Except as provided in paragraph (c)(4) of this section, days of service described in paragraph (a)(2) of this section shall be credited as follows:

(i) Days of service credited to an employee on account of a payment which is calculated on the basis of units of time, such as days, weeks or months, shall be credited to the computation period or computation periods in which the period during which no duties are performed occurs, beginning with the first unit of time to which the payment relates.

(ii) Days of service credited to an employee by reason of a payment which is not calculated on the basis of units of time shall be credited to the computation period in which the period during which no duties are performed occurs, or if the period during which no duties are performed extends beyond one computation period, such hours of service shall be allocated between not more than the first two computation periods on any reasonable basis which is consistently applied with respect to all employees within the same job classifications, reasonably defined.

(3) Except as provided in paragraph (c)(4) of this section, days of service described in paragraph (a)(3) of this section shall be credited to the computation period or periods to which the award or agreement for back pay pertains, rather than to the computation period in which the award, agreement or payment is made.

(4) In the case of days of service to be credited to an employee in connection with a period of no more than 31 days which extends beyond one computation period, all such days of service may be credited to the first computation period or the second computation period. Crediting of days of service under this paragraph must be done consistently with respect to all employees with the same job classifications, reasonably defined.

(d) *Other federal law*. Nothing in this section shall be construed to alter, amend, modify, invalidate, impair or supersede any law of the United States or any rule or regulation issued under any such law. Thus, for example, nothing in this section shall be construed as denying an employee credit for a day of service if credit is required by separate federal law. Furthermore, the nature and extent of such credit shall be determined under such law.

(e) *Nondaily employees*. For maritime employees whose compensation is not determined on the basis of certain amounts for each day worked during a given period, service shall be credited on the basis of hours of service as determined in accordance with § 2530.200b–2(a) (including use of any equivalency permitted under § 2530.200b–3) or on the basis of elapsed time, as permitted under § 2530.200b–9.

(f) *Plan document*. A plan which credits service on the basis of days of service must state in the plan document the definition of days of service set forth in paragraph (a) of this section, but is not required to state the rules

set forth in paragraphs (b) and (c) if they are incorporated by reference.

§ 2530.200b–8 Determination of days of service to be credited to maritime employees.

(a) *General rule.* For the purpose of determining the days of service which must be credited to an employee for a computation period, a plan shall determine days of service from records of days worked and days for which payment is made or due. Any records may be used to determine days of service to be credited to employees under a plan, even though such records are maintained for other purposes, provided that they accurately reflect the actual number of days of service with which an employee is required to be credited under § 2530.200b–7(a). Payroll records, for example, may provide sufficiently accurate data to serve as a basis for determining days of service. If, however, existing records do not accurately reflect the actual number of days of service with which an employee is entitled to be credited, a plan must develop and maintain adequate records. A plan may in any case credit days of service under any method which results in the crediting of no less than the actual number of days of service required to be credited under § 2530.200b–7(a) to each employee in a computation period, even though such method may result in the crediting of days of service in excess of the number of days required to be credited under § 2530.200b–7(a). A plan is not required to prescribe in its documents which records are to be used to determine days of service.

(b) *Determination of pre-effective date days of service.* To the extent that a plan is required to determine days of service completed before the effective date of part 2 of title I of the Act (*see* section 211 of the Act), the plan may use whatever records may be reasonably accessible to it and may make whatever calculations are necessary to determine the approximate number of hours of service completed before such effective date. For example, if a plan or an employer maintaining the plan has, or has access to, only the records of compensation of employees for the period before the effective date, it may derive the pre-effective date days of service by using the daily rate for the period or the days customarily worked. If accessible records are insufficient to make an approximation of the number of pre-effective date days of service for a particular employee or group of employees, the plan may make a reasonable estimate of the days of service completed by such employee or employees during the particular period. For example, if records are available with respect to some employees, the plan may estimate the days of service of other employees in the same job classification based on these records. A plan may use the elapsed time method prescribed under § 2530.200b–9 to determine days of service completed before the effective date of part 2 of title I of the Act.

§ 2530.201–1 Coverage; general.

Coverage of the provisions of part 2 of title I of the Act is determined under a multiple step process. First, the plan must be an employee benefit plan as defined under section 3(3) of the Act and § 2510.3–3. (See also the definitions of employee welfare benefit plan, section 3(1) of the Act and § 2510.3–1 and employe pension benefit plan, section 3(2) of the Act and § 2510.3–2). Second, the employee benefit plan must be subject to title I of the Act. Coverage for title I is specified in section 4 of the Act. Third, section 201 of the Act specifies the employee benefit plans subject to title I which are not subject to the minimum standards of part 2 of title I of the Act. Section 2530.201–2 specifies the employee benefit plans subject to title I of the Act which are exempted from coverage under part 2 of title I of the Act and this part (2530).

§ 2530.201–2 Plans covered by part 2530.

This part (2530) shall apply to any employee benefit plan described in section 4(a) of the Act (and not exempted under section 4(b)) other than—

(a) An employee welfare benefit plan as defined in section 3(1) of the Act and § 2510.3–1;

(b) A plan which is unfunded and is maintained by an employer primarily for the purpose of providing deferred compensation for a select group of

management or highly compensated employees;

(c) A plan established and maintained by a society, order, or association described in section 501(c)(8) or (9) of the Code, if no part of the contributions to or under such plan are made by employers of participants in such plan;

(d) A trust described in section 501(c)(18) of the Code;

(e) A plan which is established and maintained by a labor organization described in section 501(c)(5) of the Code and which does not at any time after the date of enactment of the Act provide for employer contributions;

(f) Any agreement providing payments to a retired partner or a deceased partner's successor in interest, as described in section 736 of the Code;

(g) An individual retirement account or annuity described in section 408 of the Code, or a retirement bond described in section 409 of the Code;

(h) An excess benefit plan as described in section 3(36) of the Act.

Subpart B—Participation, Vesting and Benefit Accrual

§ 2530.202–1 Eligibility to participate; general.

(a) Section 202 of the Act and section 410 of the Code contain minimum participation standards relating to certain employee pension benefit plans. In general, an employee pension benefit plan may not require, as a condition of participation in the plan, that an employee complete a period of service with the employer or employers maintaining the plan in excess of limits established by section 202 of the Act and section 410 of the Code and the regulations issued thereunder. Service for this purpose is measured in units of years of service. Section 2530.202–2 sets forth rules relating to the computation periods which a plan must use to determine whether an employee has completed a year of service for purposes of eligibility to participate (''eligibility computation periods'').

(b) For rules relating to ''service with the employer or employers maintaining the plan'', see § 2530.210.

§ 2530.202–2 Eligibility computation period.

(a) *Initial eligibility computation period.* For purposes of section 202(a)(1)(A)(ii) of the Act and section 410(a)(1)(A)(ii) of the Code, the initial eligibility computation period the plan must use is the 12-consecutive-month period beginning on the employment commencement date. An employee's employment commencement date is the first day for which the employee is entitled to be credited with an hour of service described in § 2530.200b–2(a)(1) for an employer maintaining the plan. (For establishment of a reemployment commencement date following a break in service, see § 2530.200b–4(b)(1)(iii) and (iv).)

(b) *Eligibility computation periods after the initial eligibility computation period.* In measuring years of service for purposes of eligibility to participate after the initial eligibility computation period, a plan may adopt either of the following alternatives:

(1) A plan may designate 12-consecutive-month periods beginning on the first anniversary of an employee's employment commencement date and succeeding anniversaries thereof as the eligibility computation period after the initial eligibility computation period; or

(2) A plan may designate plan years beginning with the plan year which includes the first anniversary of an employee's employment commencement date as the eligibility computation period after the initial eligibility computation period (without regard to whether the employee is entitled to be credited with 1,000 hours of service during such period), provided that an employee who is credited with 1,000 hours of service in both the initial eligibility computation period and the plan year which includes the first anniversary of the employee's employment commencement date is credited with two years of service for purposes of eligibility to participate.

(c) *Service prior to a break in service.* For purposes of applying section 202(b)(4) of the Act and section 410(a)(5)(D) of the Code (relating to years of service completed prior to a break in service for purposes of eligibility to participate), the computation

periods used by a plan in determining years of service before such break shall be the eligibility computation periods established in accordance with paragraphs (a) and (b) of this section.

(d) *Plans with 3-year 100 percent vesting.* A plan which, under 202(a)(1)(B)(i) of the Act and section 410a(1)(B)(i) of the Code, requires more than one year of service for eligibility to participate in the plan shall use an initial eligibility computation period established under paragraph (a) of this section and eligibility computation periods designated in accordance with paragraph (b) of this section. Thus, for the eligibility computation period after the initial eligibility computation period, such a plan may designate either eligibility computation periods beginning on anniversaries of an employee's employment commencement date or plan years beginning with the plan year which includes the anniversary of the first day of the initial eligibility computation period.

(e) *Alternative eligibility computation period.* The following rule is designed primarily for a plan using a recordkeeping system which does not permit the plan to identify an employee's employment commencement date (or, in the case of an employee who has incurred a one-year break in service, the employee's reemployment commencement date), but which does permit the plan to identify a period of no more than 31 days during which the employee's employment commencement date (or reemployment commencement date) occurred.

(1) A plan may use an initial eligibility computation period (or initial computation period for measuring completion of a year of service upon an employee's return after a one-year break in service) beginning on the first day of a period of no more than 31 days during which an employee's employment commencement date (or reemployment commencement date) occurs and ending on the anniversary of the last day of such period.

(2) If a plan uses an initial eligibility computation period (or initial computation period for measuring completion of a year of service upon an employee's return after a one-year break in service) permitted under paragraph (e)(1) of this section, the plan shall use the following computation periods after the initial computation period:

(i) If the plan does not use plan years for computation periods after the initial computation period, the plan shall use computation periods beginning on anniversaries of the first day of the initial computation period and ending on anniversaries of the last day of the initial computation period, and including a period of at least 12 consecutive months.

(ii) If the plan uses plan years for computation periods after the initial computation period, the plan shall use plan years beginning with the plan year which includes the anniversary of the first day of the initial computation period.

(3) For purposes of determining an employee's commencement of participation under section 202(a)(4) of the Act and section 410(a)(4) of the Code, regardless of whether an eligibility computation period permitted under this paragraph includes a period longer than 12 consecutive months, an employee who completes 1,000 hours of service in such eligibility computation period shall be treated as having satisfied the plan's service requirement for eligibility to participate as of the last day of the 12-consecutive-month period beginning on the first day of such eligibility computation period. In the case of a plan described in section 202(a)(1)(B)(i) of the Act and section 410(a)(1)(B)(i) of the Code, the requirement of the preceding sentence shall apply only with respect to the last year of service required under the plan for eligibility to participate.

(4) *Example.* A plan maintained by Employer X obtains records from X which indicate the number of hours worked by an employee during a monthly payroll period. The records do not, however, break down the number of hours worked by an employee by days. Thus, after a new employee has begun employment with X it is impossible for the plan to ascertain the employee's employment commencement date from the records furnished by X (although it is possible for the plan to determine the month during which an

employee's employment commencement date occurred). For administrative convenience, in conjunction with the equivalency based on hours worked permitted under § 2530.200b–3(d)(1), and with the method of crediting hours of service to computation periods set forth in § 2530.200b–2(c)(4), the plan uses the alternative initial eligibility computation period permitted under this paragraph. The plan provides that an employee's initial eligibility computation period shall be the period beginning on the first day of the first monthly payroll period for which the employee is entitled to credit for the performance of duties and ending on the last day of the monthly payroll period which includes the anniversary of the last day of the initial monthly payroll period. This condition ensures that the initial eligibility computation period will include the 12-consecutive-month period beginning on the employee's employment commencement date and ending on the day before the anniversary of the employee's employment commencement date. If, however, an employee completes the plans requirement of one year of service for eligibility to participate (*i.e.*, completion of 870 hours worked in an eligibility computation period) in the initial eligibility computation period, the plan provides that the employee is deemed to have satisfied the plan's service requirements for eligibility to participate as of the day before the anniversary of the first day of the initial eligibility computation period. This provision ensures that no employee who has in fact completed 1000 hours of service in the 12-consecutive-month period beginning on the employee's employment commencement date will be admitted to participation later than the date specified under section 202(a)(4) of the Act and section 410(a)(4) of the Code. For example, in the case of an employee who begins employment in January 1977, the employee's initial eligibility computation period begins on January 1, 1977 and ends on January 31, 1978. If the employee completes 879 hours worked in the initial eligibility computation period, the employee is treated as having met the plan's service requirements for eligibility to participate as of December 31, 1977. If the plan provides for semi-annual entry dates of January 1 and July 1, and the employee has met any eligibility requirements of the plan other than the minimum service requirement as of December 31, 1977, the plan must provide that the employee commences participation as of January 1, 1978.

§ 2530.203–1 Vesting; general.

(a) Section 203 of the Act and section 411(a) of the Code contain minimum vesting standards relating to certain employee pension benefit plans. In general, a pension plan subject to section 203 of the Act of section 411(a) of the Code must meet certain requirements relating to an employee's nonforfeitable (''vested'') right to his or her normal retirement benefit. One of these requirements specifies that an employee's accrued benefit derived from employer contributions must be vested in accordance with certain schedules. The schedules (or alternative minimum vesting standards) are generally based on the employee's number of years of service with the employer or employers maintaining the plan. Section 2530.203–2 sets forth rules relating to the computation periods used to determine whether an employee has completed a year of service for vesting purposes (''vesting computation periods'').

(b) For rules relating to service with the employer or employers maintaining the plan, *see* § 2530.210.

§ 2530.203–2 Vesting computation period.

(a) *Designation of vesting computation periods.* Except as provided in paragraph (b) of this section, a plan may designate any 12-consecutive-month period as the vesting computation period. The period so designated must apply equally to all participants. This requirement may be satisfied even though the actual 12-consecutive-month periods are not the same for all employees (e.g., if the designated vesting computation period is the 12-consecutive-month period beginning on an employee's employment commencement date and anniversaries of that date). The plan is prohibited, however, from using any period that would result in artificial postponement of vesting credit, such as a period meassured

by anniversaries of the date four months following the employment commencement date.

(b) *Plans with 3-year 100 percent vesting.* For rules regarding when a participant has a nonforfeitable right to his accrued benefit, see section 202(a)(1)(B)(i) of the Act and section 410(a)(1)(B)(i) of the Code and regulations issued thereunder.

(c) *Amendments to change the vesting computation period.* (1) A plan may be amended to change the vesting computation period to a different 12-consecutive-month period provided that as a result of such change no employee's vested percentage of the accrued benefit derived from employer contributions is less on any date after such change than such vested percentage would be in the absence of such change. A plan amendment changing the vesting computation period shall be deemed to comply with the requirements of this subparagraph if the first vesting computation period established under such amendment begins before the last day of the preceding vesting computation period and an employee who is credited with 1,000 hours of service in both the vesting computation period under the plan before the amendment and the first vesting computation period under the plan as amended is credited with 2 years of service for those vesting computation periods. For example, a plan which has been using a calendar year vesting computation period is amended to provide for a July 1–June 30 vesting computation period starting in 1977. Employees who complete more than 1,000 hours of service in both of the 12-month periods extending from January 1, 1977 to December 31, 1977 and from July 1, 1977 to June 30, 1978 are advanced two years on the plan's vesting schedule. The plan is deemed to meet the requirements of this subparagraph.

(2) For additional requirements pertaining to changes in the vesting schedule, see section 203(c)(1) of the Act and section 411(a)(10) of the Code and the regulations issued thereunder.

(d) *Service preceding a break in service.* For purposes of applying section 203(b)(3)(D) of the Act and section 411(a)(6)(D) of the Code, (relating to counting years of service before a break in service for vesting purposes), the computation periods used by the plan in computing years of service before such break must be the vesting computation periods. (For application of the break in service rules, see section 203(b)(3)(D) and section 411(a)(6)(D) of the Code and regulations issued thereunder.)

§ 2530.203–3 Suspension of pension benefits upon employment.

(a) *General.* Section 203(a)(3)(B) of the Act provides that the right to the employer-derived portion of an accrued pension benefit shall not be treated as forfeitable solely because an employee pension benefit plan provides that the payment of benefits is suspended during certain periods of reemployment which occur subsequent to the commencement of payment of such benefits. This section sets forth the circumstances and conditions under which such benefit payments may be suspended. A plan may provide for the suspension of pension benefits which commence prior to the attainment of normal retirement age, or for the suspension of that portion of pension benefits which exceeds the normal retirement benefit, or both, for any reemployment and without regard to the provisions of section 203(a)(3)(B) and this regulation to the extent (but only to the extent) that suspension of such benefits does not affect a retiree's entitlement to normal retirement benefits payable after attainment of normal retirement age, or the actuarial equivalent thereof.

(b) *Suspension rules*—(1) *General rule.* A plan may provide for the permanent withholding of an amount which does not exceed the suspendible amount of an employee's accrued benefit for each calendar month, or for each four or five week payroll period ending in a calendar month, during which an employee is employed in ''section 203(a)(3)(B) service'' as described in § 2530.203–3(c).

(2) *Resumption of payments.* If benefit payments have been suspended pursuant to paragraph (b)(1) of this section, payments shall resume no later than the first day of the third calendar month after the calendar month in

which the employee ceases to be employed in section 203(a)(3)(B) service: *Provided*, That the employee has complied with any reasonable procedure adopted by the plan for notifying the plan that he has ceased such employment. The initial payment upon resumption shall include the payment scheduled to occur in the calendar month when payments resume and any amounts withheld during the period between the cessation of employment and the resumption of payments, less any amounts which are subject to offset.

(3) *Offset rules*. A plan which provides for the permanent withholding of benefits may deduct from benefit payments to be made by the plan payments previously made by the plan during those calendar months or pay periods in which the employee was employed in section 203(a)(3)(B) service, *Provided*, That such deduction or offset does not exceed in any one month 25 percent of that month's total benefit payment which would have been due but for the offset (excluding the initial payment described in paragraph (b)(2) of this section, which may be subject to offset without limitation).

(4) *Notification*. No payment shall be withheld by a plan pursuant to this section unless the plan notifies the employee by personal delivery or first class mail during the first calendar month or payroll period in which the plan withholds payments that his benefits are suspended. Such notification shall contain a description of the specific reasons why benefit payments are being suspended, a general description of the plan provisions relating to the suspension of payments, a copy of such provisions, and a statement to the effect that applicable Department of Labor regulations may be found in § 2530.203–3 of the Code of Federal Regulations. In addition, the suspension notification shall inform the employee of the plan's procedure for affording a review of the suspension of benefits. Requests for such reviews may be considered in accordance with the claims procedure adopted by the plan pursuant to section 503 of the Act and applicable regulations. In the case of a plan which requires the filing of a benefit resumption notice as a condition precedent to the resumption of benefits, the suspension notification shall also describe the procedure for filing such notice and include the forms (if any) which must be filed. Furthermore, if a plan intends to offset any suspendible amounts actually paid during the periods of employment in section 203(a)(3)(B) service, the notification shall identify specifically the periods of employment, the suspendible amounts which are subject to offset, and the manner in which the plan intends to offset such suspendible amounts. Where the plan's summary plan description (SPD) contains information which is substantially the same as information required by this paragraph (b)(4), the suspension notification may refer the employee to relevant pages of the SPD for information as to a particular item, provided the employee is informed how to obtain a copy of the SPD, or relevant pages thereof, and provided requests for referenced information are honored within a reasonable period of time, not to exceed 30 days.

(5) *Verification*. A plan may provide that an employee must notify the plan of any employment. A plan may request from an employee access to reasonable information for the purpose of verifying such employment. Furthermore, a plan may provide that an employee must, at such time and with such frequency as may be reasonable, as a condition to receiving future benefit payments, either certify that he is unemployed or provide factual information sufficient to establish that any employment does not constitute section 203(a)(3)(B) service if specifically requested by the plan administrator. Once an employee has furnished the required certification or information, the plan must forward, at the next regularly scheduled time for payment of benefits, all payments which had been withheld pursuant to this paragraph (b)(5) except to the extent that payments may be withheld and offset pursuant to other provisions of this regulation.

(6) *Status determination*. If a plan provides for benefits suspension, the plan shall adopt a procedure, and so inform employees, whereunder an employee may request, and the plan administrator in a reasonable amount of time will render, a determination of whether

specific contemplated employment will be section 203(a)(3)(B) service for purposes of plan provisions concerning suspension of benefits. Requests for status determinations may be considered in accordance with the claims procedure adopted by the plan pursuant to section 503 of the Act and applicable regulations.

(7) *Presumptions.* (i) A plan which has adopted verification requirements described in paragraph (b)(5) of this section, and which complies with the notice requirements set forth in paragraph (b)(7)(ii) of this section may provide that whenever the plan fiduciaries become aware that a retiree is employed in section 203(a)(3)(B) service and the retiree has not complied with the plan's reporting requirements with regard to that employment, the plan fiduciaries may, unless it is unreasonable under the circumstances to do so, act on the basis of a rebuttable presumption that the retiree had worked a period exceeding the plan's minimum number of hours for that month. In addition, a plan covering persons employed in the building trades which has adopted verification requirements described in paragraph (b)(5) of this section and which complies with the notice requirements set forth in paragraph (b)(7)(ii) of this section may provide that whenever the plan fiduciaries become aware that a retiree is employed in section 203(a)(3)(B) service at a construction site and the retiree has not complied with the plan's reporting requirements with regard to that employment, then the plan fiduciaries may, unless it is unreasonable under the circumstances to do so, act on the basis of a rebuttable presumption that the retiree engaged in such employment for the same employer in work at that site for so long before the work in question as that same employer performed that work at that construction site.

(ii) A plan which provides for a presumption described in paragraph (b)(7)(i) of this section may employ such presumption only if the following requirements are met. The plan must describe its employment verification requirements and the nature and effect of such presumption in the plan's summary plan description and in any communication to plan participants which relates to such verification requirements (for example, employment reporting reminders or forms), and retirees must be furnished such disclosure, whether through receipt of the above communications or by special distribution, at least once every 12 months.

(c) *Section 202(a)(3)(B) service*—(1) *Plans other than multiemployer plans.* In the case of a plan other than a multiemployer plan, as defined in section 3(37) of the Act, the employment of an employee, subsequent to the time the payment of benefits commenced or would have commenced if the employee had not remained in or returned to employment, results in section 203(a)(3)(B) service during a calendar month, or during a four or five week payroll period ending in a calendar month, if the employee, in such month or payroll period,

(i) Completes 40 or more hours of service (as defined in 29 CFR 2530.200b–2(a)(1) and (2)) for an employer which maintains the plan, including employers described in § 2530.210 (d) and (e), as of the time that the payment of benefits commenced or would have commenced if the employee had not remained in or returned to employment; or

(ii) Receives from such employer payment for any such hours of service performed on each of 8 or more days (or separate work shifts) in such month or payroll period, *Provided*, That the plan has not for any purpose determined or used the actual number of hours of service which would be required to be credited to the employee under § 2530.200b–(2)(a).

(2) *Multiemployer plans.* In the case of a multiemployer plan, as defined in section 3(37) of the Act, the employment of an employee subsequent to the time the payment of benefits commenced or would have commenced if the employee had not remained in or returned to employment results in section 203(a)(3)(B) service during a calendar month, or during a four or five week payroll period ending in a calendar month, if the employee, in such month or payroll period:

—Completes 40 or more hours of service (as defined in § 2530.200b–2(a)(1) and (2)) or

—Receives payment for any such hours of service performed on each of 8 or more days (or separate work shifts) in such month or payroll period, *Provided,* That the plan has not for any purpose determined or used the actual number of hours of service which would be required to be credited to the employee under § 2530.200(b)–(2)(a); in

—An industry in which employees covered by the plan were employed and accrued benefits under the plan as a result of such employment at the time that the payment of benefits commenced or would have commenced if the employee had not remained in or returned to employment, and

—A trade or craft in which the employee was employed at any time under the plan, and

—The geographic area covered by the plan at the time that the payment of benefits commenced or would have commenced if the employee had not remained in or returned to employment.

(i) *Industry.* The term ''industry'' means the business activities of the types engaged in by any employers maintaining the plan.

Example. One of the employers contributing to a multiemployer plan engages in heavy construction, another in textile manufacturing, and another in communications. Employee E began his career as an employee of an employer engaged in heavy construction. Later E was employed by an employer in communications. With both employers, E accrued benefits under the plan. If E retires and then becomes reemployed in the same trade or craft and in the same geographic area, employment by E in either heavy construction, communications or textile manufacturing, whether or not with an employer who contributes to the plan or in a self-employed capacity, may be considered by the plan to be employment in the same industry, assuming that employees covered by the plan were accruing benefits as a result of employment in these industries at the time E commenced receiving benefits. This is true even though E did not previously accrue benefits as a result of employment with an employer engaged in textile manufacturing because other employees covered by the plan were employed in that industry and were accruing benefits under the plan as a result of such employment at the time when benefit payments to E commenced or would have commenced if E had not returned to employment.

(ii) *Trade or craft.* A trade or craft is (A) a skill or skills, learned during a significant period of training or practice, which is applicable in occupations in some industry, (B) a skill or skills relating to selling, retailing, managerial, clerical or professional occupations, or (C) supervisory activities relating to a skill or skills described in (A) or (B) of this paragraph (c)(2)(ii). For purposes of this paragraph (c)(2)(ii), the determination whether a particular job classification, job description or industrial occupation constitutes or is included in a trade or craft shall be based upon the facts and circumstances of each case. Factors which may be examined include whether there is a customary and substantial period of practical, on-the-job training or a period of related supplementary instruction. Notwithstanding any other factor, the registration of an apprenticeship program with the Bureau of Apprenticeship and Training of the Employment Training Administration of the U.S. Department of Labor is sufficient for the conclusion that a skill or skills which is the subject of the apprenticeship program constitutes a trade or craft.

Example. Participation in a multiemployer plan is limited solely to electricians. Electrician E retired and then became reemployed as a foreman of electricians. Because a ''trade or craft'' includes related supervisory activities, E remains within his trade or craft for purposes of this section.

(iii) *Geographic area covered by the plan.* (A) With the exception of a plan covering employees in a maritime industry, the ''geographic area covered by the plan'' consists of any state or any province of Canada in which contributions were made or were required to be made by or on behalf of an employer and the remainder of any Standard Metropolitan Statistical Area (SMSA) which falls in part within such state, determined as of the time that the payment of benefits commenced or would have commenced if the employee had not returned to employment.

Example. A multiemployer plan covers plumbers in Pennsylvania. All contributing employers have always been located within Pennsylvania. Accordingly, the ''geographic area covered by the plan'' consists of Pennsylvania and any SMSAs which fall in part within Pennsylvania. Thus, for example, in the case of the Philadelphia SMSA, Burlington, Camden and Gloucester Counties in New Jersey are within the ''geographic area covered by the plan''.

(B) [Reserved—for definition of the geographic area covered by a plan that

covers employees in a maritime industry.]

For purposes of this paragraph (c)(2)(iii), contributions shall not include amounts contributed: After December 31, 1978 by or on behalf of an employer where no contributions were made by or on behalf of that employer before that date, if the primary purpose of such contribution is to allow for the suspension of plan benefits in a geographic area not otherwise covered by the plan; or with respect to isolated projects performed in states where plan participants were not otherwise employed.

(3) *Employment in a maritime industry.* For plans covering employees employed in a maritime industry, as defined in § 2530.200b–6, the standard of ''five or more days of service, as defined in § 2530.200b–7(a)(1)'' shall be used in lieu of the standard ''40 or more hours of service'', for purposes of determining whether an employee is employed in section 203(a)(3)(B) service.

(d) *Suspendable amount*—(1) *Life annuity.* In the case of benefits payable periodically on a monthly basis for as long as a life (or lives) continues, such as a straight life annuity or a qualified joint and survivor annuity, a plan may provide that an amount not greater than the portion of a monthly benefit payment derived from employer contributions may be withheld permanently for a calendar month, or for a four or five week payroll period ending in a calendar month, in which the employee is employed in section 203(a)(3)(B) service.

(2) *Other benefit forms.* In the case of benefits payable in a form other than the form described in paragraph (d)(1) of this section, a plan may provide for the permanent withholding of an amount of the employer-derived portion of benefit payments for a calendar month, or for a four or five week payroll period ending in a calendar month, in which the employee is employed in section 203(a)(3)(B) service, not exceeding the lesser of—

(i) The amount of benefits which would have been payable to the employee if he had been receiving monthly benefits under the plan since actual retirement based on a single life annuity commencing at actual retirement age; or

(ii) The actual amount paid or scheduled to be paid to the employee for such month. Payments which are scheduled to be paid less frequently than monthly may be converted to monthly payments for purposes of this paragraph (d)(2)(ii).

(Approved by the Office of Management and Budget under control number 1210–0048)

[46 FR 8903, Jan. 27, 1981, as amended at 46 FR 59245, Dec. 4, 1981; 46 FR 60572, Dec. 11, 1981; 49 FR 18295, Apr. 30, 1984]

§ 2530.204–1 Year of participation for benefit accrual.

(a) *General.* Section 204(b)(1) of the Act and section 411(b)(1) of the Code contain certain requirements relating to benefit accrual under a defined benefit pension plan. Some of these requirements are based on the number of years of participation included in an employee's period of service. Paragraph (b) of this section relates to service which must be taken into account in determining an employee's period of service for purposes of benefit accrual. Section 2530.204–2 sets forth rules relating to the computation periods to be used in measuring years of participation for benefit accrual (''accrual computation periods'').

(b) *Service which may be disregarded for purposes of benefit accrual.* (1) In calculating an employee's period of service for purposes of benefit accrual under a defined benefit pension plan, section 204(b)(3) of the Act and section 411(b)(3) of the Code permit the following service to be disregarded: service before an employee first becomes a participant in the plan; service which is not required to be taken into account under section 202(b) of the Act and section 410(b)(5) of the Code (relating to one-year breaks in service for purposes of eligibility to participate); and service which is not required to be taken into account under section 204(b)(3)(C) of the Act and section 411(b)(3)(C) of the Code (relating to 12-consecutive-month periods during which an employee's service is less than 1,000 hours). In addition, in calculating an employee's period of service for purposes of benefit accrual, a defined benefit plan shall not be required

to take into account service before the conclusion of a series of consecutive 1-year breaks in service occurs which permits a plan to disregard prior service under section 203(b)(3)(D) of the Act and section 411(a)(6)(D) of the Code.

(2) *Example*. The following example illustrates paragraph (b)(1) of this section. A plan has a calendar year vesting and accrual computation period and, under § 2530.202–2 (a) and (b)(1), uses eligibility computation periods beginning on an employee's employment commencement date and anniversaries thereof. The plan provides that an employee who has at least 10 years of service has a vested right to 100 percent of his accrued benefit derived from employer contributions. The plan provides that an employee who is credited with at least 1,000 hours of service in a calendar year accrual computation period is credited with at least partial year of participation for purposes of benefit accrual. An employee whose birthday is October 16, 1956, begins employment with an employer maintaining the plan on January 1, 1977. Under § 2530.202–2(a)(1), January 1, 1977 is the employee's employment commencement date and the calendar year 1977 is the employee's initial eligibility computation period. The employee completes at least 1,000 hours of service in each of the calendar years from 1977 through 1981. On January 1, 1982 the employee is admitted to participation in the plan, having met the plan's age requirement (25 years) and service requirement (one year of service) for eligibility to participate. In 1982, the employee is credited with the number of hours of service required for a full year of participation (*i.e.*, more than 1,000 hours of service). Under § 2530.202–2(c), for purposes of applying section 202(b)(4) of the Act and section 410(a)(5)(D) of the Code (relating to years of service completed before a break in service for purposes of eligibility to participate), eligibility computation periods beginning on the employee's employment commencement date and anniversaries thereof are used under the plan to measure service prior to a break in service (in addition, under § 2530.200b–4(a)(2), the same eligibility computation periods are used in measuring one-year breaks in service for purposes of eligibility to participate). Thus, as of January 1, 1983, the employee is credited with six years of service for purposes of eligibility to participate and is credited with one year of participation. In accordance with section 203(b)(1)(A) of the Act and section 411(a)(4)(A) of the Code, the plan provides that years of service completed before age 22 are disregarded for purposes of vesting. As of January 1, 1983, therefore, the employee is credited with four years of service for purposes of vesting. In 1983 the employee terminates employment with the employer, incurring one-year breaks in service in each of the calendar years from 1983 through 1986. As of December 31, 1986, the employee's consecutive one-year breaks in service equal the employee's four years of service for vesting before such breaks. Under section 203(b)(3)(D) of the Act and section 410(a)(5)(D) of the Code and the terms of the plan, the four years of service for vesting completed by the employee before his four consecutive one-year breaks in service are not taken into account for purposes of vesting. Under paragraph (b)(1) of this section, therefore, in calculating the employee's period of service for purposes of benefit accrual, the plan may disregard the year of participation completed by the employee before his four consecutive one-year breaks in service for vesting, because the four consecutive one-year breaks in service equal the four years of service credited to the employee for vesting. The employee is re-employed by the employer on January 1, 1987 completing an hour of service on that date. Under § 2530.200b–4(b)(1), therefore, January 1, 1987 is the employee's reemployment commencement date. In 1987, the employee completes the number of hours of service required for a full year of participation (*i.e.*, more than 1,000 hours of service). For 1987, therefore, the employee is credited with a year of service for purposes of eligibility to participate and vesting, and with a year of participation. As of December 31, 1987, the employee is credited with one year of service for purposes of vesting, since service before the employee's four consecutive one-year breaks in service—including the year of service completed in 1982—

is not taken into account. Because under paragraph (b)(1) of this section, the year of participation credited to the employee for 1982 is not required to be taken into account for purposes of benefit accrual, the employee is credited with one year of participation as of December 31, 1987.

§ 2530.204–2 Accrual computation period.

(a) *Designation of accrual computation periods.* A plan may designate any 12-consecutive-month period as the accrual computation period except that the period so designated must apply equally to all participants. This requirement may be satisfied even though the actual time periods are not the same for all participants. For example, the accrual computation period may be designated as the vesting computation period, the plan year, or the 12-consecutive-month period beginning on either of two semi-annual dates designated for entry to participation under a plan.

(b) *Participation prior to effective date.* For purposes of applying the accrual rules of section 204(b)(1)(D) of the Act and section 411(b)(1)(D) of the Code (relating to accrual requirements for defined benefit plans for periods prior to the effective date of those sections), all service from the date of participation in the plan as determined in accordance with applicable plan provisions, shall be taken into account in determining an employee's period of service. When the plan documents do not provide a definite means for determining the date of commencement of participation, the date of commencement of employment covered under the plan during the period that the employer maintained the plan shall be presumed to be the date of commencement of participation in the plan. The plan may rebut this presumption by demonstrating from circumstances surrounding the operation of the plan, such as the date of commencement of mandatory employee contributions, that participation actually began on a later date.

(c) *Partial year of participation.* (1) Under section 204(b)(3)(C) of the Act and section 411(b)(3)(C) of the Code, in calculating an employee's period of service for purposes of benefit accrual, a plan is not required to take into account a 12-consecutive-month period during which the employee's service is less than 1,000 hours of service. In measuring an employee's service for purposes of section 204(b)(3)(C) of the Act and section 411(b)(3)(C) of the Code, a plan shall use the accrual computation period designated under paragraph (a) of this section. Under section 204(b)(3)(B) of the Act and section 411(b)(3)(B) of the Code, in the case of an employee whose service is not less than 1,000 hours of service during an accrual computation period, the calculation of such employee's period of service will not be treated as made on a reasonable and consistent basis unless service during such computation period is taken into account. To the extent that the employee's service during the accrual computation period is less than the service required under the plan for a full year of participation, the employee must be credited with a partial year of participation equivalent to no less than a ratable portion of a full year of participation.

(2) For purposes of calculating the portion of a full year of participation to be credited to an employee whose service during a computation period is not less than 1,000 hours of service but is less than service required for a full year of participation in the plan, the plan may credit the employee with a greater portion of a full year of participation than a ratable portion, or may credit an employee with a full year of participation even though the employee's service is less than the service required for a full year of participation, provided that such crediting is reasonable and is consistent for all employees within the same job classifications, reasonably established.

(3) In the case of an employee who commences participation in a plan (or recommences participation in the plan upon the employee's return after one or more 1-year breaks in service) on a date other than the first day of an applicable accrual computation period, all hours of service required to be credited to the employee during the entire accrual computation period, including

hours of service credited to the employee for the portion of the computation period before the date on which the employee commences (or recommences) participation, shall be taken into account in determining whether the employee has 1,000 or more hours of service for purposes of section 204(b)(3)(C) of the Act and section 411(b)3)(C) of the Code. If such employee's service is not less than 1,000 hours in such accrual computation period, the employee must be credited with a partial year of participation which is equivalent to no less than a ratable portion of a full year of participation for service credited to the employee for the portion of the computation period after the date of commencement (or recommencement) of participation.

(4) *Examples*. The following are examples of reasonable and consistent methods for crediting partial years of participation:

(i) A plan requires 2,000 hours of service for a full year of participation. An employee who is credited during a computation period with no less than 1,000 hours of service but less than 2,000 hours of service is credited with a partial year of participation equal to a portion of a full year of participation determined by dividing the number of hours of service credited to the employee by 2,000.

(ii) A plan requires 2,000 hours of service for a full year of participation. The plan credits service in an accrual computation period in accordance with the following table:

Hours of service credited	Percentage of full year of participation credited
1000	50
1001 to 1200	60
1201 to 1400	70
1401 to 1600	80
1601 to 1800	90
1801 and above	100

Under this method of crediting partial years of participation, each employee who is credited with not less than 1,000 hours of service is credited with at least a ratable portion of a full year of participation.

(iii) A plan provides that each employee who is credited with at least 1,000 hours of service in an accrual computation period must receive credit for at least a partial year of participation for that computation period. For full accrual, however, the plan requires that an employee must be credited with a specified number of hours worked; employees who meet the 1,000 hours of service requirement but who are not credited with the specified number of hours worked required for a full year of participation are credited with a partial year of participation on a prorata basis. For example, if the plan requires 1,500 hours worked for full accrual, an employee with 1,500 hours worked would be credited with full accrual, but an employee with 1,000 hours worked and 500 other hours of service would be credited with ⅔ of full accrual. The plan's method of crediting service for accrual purposes is consistent with the requirements of this paragraph. It should be noted, however, that use of hours worked as a basis for prorating benefit accrual may result in discrimination prohibited under section 401(a)(4) of the Code.

(iv) Employee A is employed on June 1, 1980 in service covered by a plan with a calendar year accrual computation period, and which requires 1,800 hours of service for a full accrual. Employee A completes 500 hours from June 1, 1980 to December 31, 1980, and completes 100 hours per month in each month during 1981. A is admitted to participation on July 1, 1981. A is credited with 1,200 hours of service for the accrual computation period beginning January 1, 1981. Under the rules set forth in paragraph (c)(3) of this section, A is required to be credited with not less than one-third of a full accrual (600 hours divided by 1,800 hours).

(d) *Prohibited double proration*. (1) In the case of a defined benefit plan that (i) defines benefits on a basis which has the effect of prorating benefits to reflect less than full-time employment or less than maximum compensation and (ii) does not adjust less-than-full-time service to reflect the equivalent of full-time hours or compensation (as the case may be), the plan may not further prorate benefit accrual under section 204(b)(3)(B) of the Act and section 411(b)(3)(B) of the Code by crediting less than full years of participation, as would otherwise be permitted under paragraph (c) of this section. These

plans must credit, except when service may be disregarded under section 204(b)(3)(C) of the Act and section 411(b)(3)(C) of the Code (relating to less than 1,000 hours of service), less-than-full-time employees with a full year of participation for the purpose of accrual of benefits.

(2) *Examples*. (i) A plan's defined benefit formula provides that the annual retirement benefit shall be 2 percent of the average compensation in all years of participation multiplied by the number of years of participation. Employee A is a full-time employee who has completed 2,000 hours during each of 20 accrual computation periods. A's average hourly rate was $5 an hour. Thus, A's average compensation for each year during participation in the plan is $10,000 ($5 per hour multiplied by 2,000 hours). If the plan states that a full year of participation is 2,000 hours, then A's annual retirement benefits, if he retired at that time, would be $4,000 ($10,000 per year of compensation ×.02×20 years of participation). Employee B, however, is a part-time employee who completes 1,000 hours of service during each of 20 accrual computation periods. Like A, B's average hourly rate is $5 per hour. B's average compensation for his total years of participation is $5,000 ($5 per hour multiplied by 1,000 hours). Thus, the plan's benefit formula, by basing benefits on an employee's average compensation in all years of participation, in effect prorates benefits to reflect the fact that during B's participation in the plan, he has earned less than the maximum compensation that a full-time employee paid at the same rate could earn during the same period of participation in the plan. Under the rule of subparagraph (1), therefore, the plan is not permitted to prorate B's years of participation to reflect B's less than full-time employment throughout his participation in the plan. Therefore, B's annual retirement benefit would be $2,000 ($5,000 average compensation ×.02×20 years of participation). (If double proration were permitted, then B's total years of participation would be only 10 since he would be credited with only one-half of a year of participation during each of the accrual computation periods (1,000/2,000). Thus, B's annual retirement benefit would be $1,000—i.e., $5,000 average compensation ×.02×10 years of participation.)

(ii) If the plan adjusts the average compensation during plan participation to reflect full compensation, then the plan may prorate years of participation. Thus, the average full annual compensation for B would be $10,000 rather than the $5,000 actually paid. Employee B's annual retirement benefit would then be $2,000 ($10,000 average full compensation ×.02×10 years of participation).

(e) *Amendments to change accrual computation periods*. (1) A plan may be amended to change the accrual computation period to a different 12-consecutive-month period, provided that the period between the end of the last accrual computation period under the plan as in effect before such amendment and the beginning of the first accrual computation period under the plan as amended is treated as a partial accrual computation period in accordance with the rules set forth in paragraph (e)(2) of this section.

(2) In the case of a partial accrual computation period, the following rules shall apply:

(i) A plan having a minimum service requirement expressed in hours of service (or other units of service) for benefit accrual in a full accrual computation period (as permitted under section 204(b)(3)(B) of the Act and section 411(b)(3)(B) of the Code) may apply a minimum service requirement for benefit accrual in a partial accrual computation period which is equal to the plan's minimum service requirement for benefit accrual in a full accrual computation period, multiplied by the ratio of the length of the partial accrual computation period to a full year.

(ii) In the case of a participant who meets a plan's minimum service requirement for benefit accrual in a partial accrual computation period (as permitted under paragraph (e)(2)(i) of this section), the plan shall credit the participant with at least a partial year of participation for purposes of benefit accrual. Credit for a partial accrual computation period shall be determined in accordance with paragraphs (c) and (d) of this section.

(3) *Example*. Effective October 1, 1977, a plan is amended to change the accrual computation period from the 12-consecutive-month period beginning on January 1 to the 12-consecutive-month period beginning on October 1. The period from January 1, 1977 to September 30, 1977 must be treated as a partial accrual computation period. The plan has a requirement that a participant must be credited with 1,000 hours of service in an accrual computation period in order to be credited with a year of participation for purposes of benefit accrual. For the partial accrual computation period the plan may require a participant to be credited with 750 hours of service in the partial accrual computation period in order to receive credit for purposes of benefit accrual (1,000 hours of service multiplied by the ratio of 9 months to 12 months). To the extent permitted under paragraph (d) of this section, the plan may prorate accrual credit on whatever basis the plan uses to prorate accrual credit for employees whose service is 1,000 hours of service or more but less than service required for full accrual in a full accrual computation period.

§ 2530.204–3 Alternative computation methods for benefit accrual.

(a) *General*. Under section 204(b)(3)(A) of the Act and section 411(b)(3)(A) of the Code, a defined benefit pension plan may determine an employee's service for purposes of benefit accrual on the basis of accrual computation periods, as specified in § 2530.204–2, or on any other basis which is reasonable and consistent and which takes into account all covered service during the employee's participation in the plan which is included in a period of service required to be taken into account under section 202(b) of the Act and section 410(a)(5) of the Code. If, however, a plan determines an employee's service for purposes of benefit accrual on a basis other than computation periods, it must be possible to prove that, despite the fact that benefit accrual under the plan is not based on computation periods, the plan's provisions meet at least one of the three benefit accrual rules of section 204(b)(1) of the Act and section 411(b)(1) of the Code under all circumstances. Further, a plan which does not provide for benefit accrual on the basis of computation periods may not disregard service under section 204(b)(3)(C) of the Act and section 411(b)(3)(C) of the Code.

(b) *Examples*. The following are examples of methods of determining an employee's period of service for purposes of benefit accrual under which an employee's period of service is not determined on the basis of computation periods but which may be used by a plan provided that the requirements of paragraph (a) of this section are met:

(1) *Career compensation*. A defined benefit formula based on a percentage of compensation earned in a participant's career or during participation, with no variance depending on hours completed in given periods.

(2) *Credited hours*. A defined benefit formula pursuant to which an employee is credited with a specified amount of accrual for each hour of service (or hour worked or regular time hour) completed by the employee during his or her career.

(3) *Elapsed time*. See § 2530.200b–9(e).

§ 2530.204–4 Deferral of benefit accrual.

For purposes of section 204(b)(1)(E) of the Act and section 411(b)(1)(E) of the Code (which permit deferral of benefit accrual until an employee has 2 continuous years of service), an employee shall be credited with a year of service for each computation period in which he or she completes 1,000 hours of service. The computation period shall be the eligibility computation period designated in accordance with § 2530.202–2.

Subpart C—Form and Payment of Benefits

§ 2530.205 [Reserved]

§ 2530.206 Time and order of issuance of domestic relations orders.

(a) *Scope*. This section implements section 1001 of the Pension Protection Act of 2006 by clarifying certain timing issues with respect to domestic relations orders and qualified domestic relations orders under the Employee Retirement Income Security Act of 1974, as amended (ERISA), 29 U.S.C. 1001 *et seq*. The examples herein illustrate the

application of this section in certain circumstances. This section also applies in circumstances not described in the examples.

(b) *Subsequent domestic relations orders.* (1) Subject to paragraph (d)(1) of this section, a domestic relations order shall not fail to be treated as a qualified domestic relations order solely because the order is issued after, or revises, another domestic relations order or qualified domestic relations order.

(2) The rule described in paragraph (b)(1) of this section is illustrated by the following examples:

Example (1). Subsequent domestic relations order between the same parties. Participant and Spouse divorce, and the administrator of Participant's 401(k) plan receives a domestic relations order. The administrator determines that the order is a QDRO. The QDRO allocates a portion of Participant's benefits to Spouse as the alternate payee. Subsequently, before benefit payments have commenced, Participant and Spouse seek and receive a second domestic relations order. The second order reduces the portion of Participant's benefits that Spouse was to receive under the QDRO. The second order does not fail to be treated as a QDRO solely because the second order is issued after, and reduces the prior assignment contained in, the first order. The result would be the same if the order were instead to increase the prior assignment contained in the first order.

Example (2). Subsequent domestic relations order between different parties. Participant and Spouse 1 divorce and the administrator of Participant's 401(k) plan receives a domestic relations order. The administrator determines that the order is a QDRO. The QDRO allocates a portion of Participant's benefits to Spouse 1 as the alternate payee. Participant marries Spouse 2, and then they divorce. Participant's 401(k) plan administrator subsequently receives a domestic relations order pertaining to Spouse 2. The order assigns to Spouse 2 a portion of Participant's 401(k) benefits not already allocated to Spouse 1. The second order does not fail to be a QDRO solely because the second order is issued after the plan administrator has determined that an earlier order pertaining to Spouse 1 is a QDRO.

(c) *Timing.* (1)Subject to paragraph (d)(1) of this section, a domestic relations order shall not fail to be treated as a qualified domestic relations order solely because of the time at which it is issued.

(2) The rule described in paragraph (c)(1) of this section is illustrated by the following examples:

Example (1). Orders issued after death. Participant and Spouse divorce, and the administrator of Participant's plan receives a domestic relations order, but the administrator finds the order deficient and determines that it is not a QDRO. Shortly thereafter, Participant dies while actively employed. A second domestic relations order correcting the defects in the first order is subsequently submitted to the plan. The second order does not fail to be treated as a QDRO solely because it is issued after the death of the Participant. The result would be the same even if no order had been issued before the Participant's death, in other words, the order issued after death were the only order.

Example (2). Orders issued after divorce. Participant and Spouse divorce. As a result, Spouse no longer meets the definition of ''surviving spouse'' under the terms of the plan. Subsequently, the plan administrator receives a domestic relations order requiring that Spouse be treated as the Participant's surviving spouse for purposes of receiving a death benefit payable under the terms of the plan only to a participant's surviving spouse. The order does not fail to be treated as a QDRO solely because, at the time it is issued, Spouse no longer meets the definition of a ''surviving spouse'' under the terms of the plan.

Example (3). Orders issued after annuity starting date. Participant retires and begins receipt of benefits in the form of a straight life annuity, equal to $1,000 per month, and with respect to which Spouse has consented to the waiver of the surviving spousal rights provided under the plan and section 205 of ERISA. Subsequent to the commencement of benefits (in other words, subsequent to the annuity starting date as defined in section 205(h)(2) of ERISA and as further explained in 26 CFR 1.401(a)–20, Q&A–10(b)), Participant and Spouse divorce and present the plan with a domestic relations order requiring 50 percent ($500) of Participant's future monthly annuity payments under the plan to be paid instead to Spouse, as an alternate payee (so that monthly payments of $500 are to be made to Spouse during Participant's lifetime). Pursuant to paragraph (c)(1) of this section, the order does not fail to be a QDRO solely because it is issued after the annuity starting date. If the order instead had required payments to Spouse for the lifetime of Spouse, this would constitute a reannuitization with a new annuity starting date, rather than merely allocating to Spouse a part of the determined annuity payments due to Participant, so that the order, while not failing to be a QDRO because of the timing of the order, would fail to meet the requirements of section 206(d)(3)(D)(i) of ERISA (unless the plan otherwise permits such a change after the participant's annuity starting date). See 29 CFR 2530.206(d)(2), Example (4).

(d) *Requirements and protections.* (1) Any domestic relations order described in this section shall be a qualified domestic relations order only if the order satisfies the same requirements and protections that apply under section 206(d)(3) of ERISA.

(2) The rule described in paragraph (d)(1) of this section is illustrated by the following examples:

Example (1). Type or form of benefit. Participant and Spouse divorce, and their divorce decree provides that the parties will prepare a domestic relations order assigning 50 percent of Participant's benefits under a 401(k) plan to Spouse to be paid in monthly installments over a 10-year period. Shortly thereafter, Participant dies while actively employed. A domestic relations order consistent with the divorce decree is subsequently submitted to the 401(k) plan; however, the plan does not provide for 10-year installment payments of the type described in the order. Pursuant to paragraph (c)(1) of this section, the order does not fail to be treated as a QDRO solely because it is issued after the death of Participant, but the order would fail to be a QDRO under section 206(d)(3)(D)(i) and paragraph (d)(1) of this section because the order requires the plan to provide a type or form of benefit, or any option, not otherwise provided under the plan.

Example (2). Segregation of payable benefits. Participant and Spouse divorce, and the administrator of Participant's plan receives a domestic relations order under which Spouse would begin to receive benefits immediately if the order is determined to be a QDRO. The plan administrator separately accounts for the amounts covered by the domestic relations order as is required under section 206(d)(3)(H)(v) of ERISA. The plan administrator finds the order deficient and determines that it is not a QDRO. Subsequently, after the expiration of the segregation period pertaining to that order, the plan administrator receives a second domestic relations order relating to the same parties under which Spouse would begin to receive benefits immediately if the second order is determined to be a QDRO. Notwithstanding the expiration of the first segregation period, the amounts covered by the second order must be separately accounted for by the plan administrator for an 18-month period, in accordance with section 206(d)(3)(H) of ERISA and paragraph (d)(1) of this section.

Example (3). Previously assigned benefits. Participant and Spouse 1 divorce, and the administrator of Participant's 401(k) plan receives a domestic relations order. The administrator determines that the order is a QDRO. The QDRO assigns a portion of Participant's benefits to Spouse 1 as the alternate payee. Participant marries Spouse 2, and then they divorce. Participant's 401(k) plan administrator subsequently receives a domestic relations order pertaining to Spouse 2. The order assigns to Spouse 2 a portion of Participant's 401(k) benefits already assigned to Spouse 1. The second order does not fail to be treated as a QDRO solely because the second order is issued after the plan administrator has determined that an earlier order pertaining to Spouse 1 is a QDRO. The second order, however, would fail to be a QDRO under section 206(d)(3)(D)(iii) and paragraph (d)(1) of this section because it assigns to Spouse 2 all or a portion of Participant's benefits that are already assigned to Spouse 1 by the prior QDRO.

Example (4). Type or form of benefit. Participant retires and commences benefit payments in the form of a straight life annuity based on the life of Participant, with respect to which Spouse consents to the waiver of the surviving spousal rights provided under the plan and section 205 of ERISA. Participant and Spouse divorce after the annuity starting date and present the plan with a domestic relations order that eliminates the straight life annuity based on Participant's life and provides for Spouse, as alternate payee, to receive all future benefits in the form of a straight life annuity based on the life of Spouse. The plan does not allow reannuitization with a new annuity starting date, as defined in section 205(h)(2) of ERISA (and as further explained in 26 CFR 1.401(a)–20, Q&A–10(b)). Pursuant to paragraph (c)(1) of this section, the order does not fail to be a QDRO solely because it is issued after the annuity starting date, but the order would fail to be a QDRO under section 206(d)(3)(D)(i) and paragraph (d)(1) of this section because the order requires the plan to provide a type or form of benefit, or any option, not otherwise provided under the plan. However, the order would not fail to be a QDRO under section 206(d)(3)(D)(i) and paragraph (d)(1) of this section if instead it were to require all of Participant's future payments under the plan to be paid instead to Spouse, as an alternate payee (so that payments that would otherwise be paid to the Participant during the Participant's lifetime are instead to be made to the Spouse during the Participant's lifetime).

[75 FR 32850, June 10, 2010]

Subpart D—Plan Administration as Related to Benefits

§§ 2530.207–2530.209 [Reserved]

§ 2530.210 Employer or employers maintaining the plan.

(a) *General statutory provisions*—(1) *Eligibility to participate and vesting.* Except as otherwise provided in section 202(b) or 203(b)(1) of the Act and sections 410(a)(5), 411(a)(5) and 411(a)(6) of the Code, all years of service with the employer or employers maintaining the plan shall be taken into account for purposes of section 202 of the Act and section 410 of the Code (relating to minimum eligibility standards) and section 203 of the Act and section 411(a) of the Code (relating to minimum vesting standards).

(2) *Accrual of benefits.* Except as otherwise provided in section 202(b) of the Act and section 410(a)(5) of the Code, all years of participation under the plan must be taken into account for purposes of section 204 of the Act and section 411(b) of the Code (relating to benefit accrual). Section 204(b) of the Act and section 411(b) of the Code require only that periods of actual participation in the plan (e.g., covered service) be taken into account for purposes of benefit accrual.

(b) *General rules concerning service to be credited under this section.* Section 210 of the Act and sections 413(c), 414(b), and 414(c) of the Code provide rules applicable to sections 202, 203, and 204 of the Act and sections 410, 411(a), and 411(b) of the Code for purposes of determining who is an ''employer or employers maintaining the plan'' and, accordingly, what service is required to be taken into account in the case of a plan maintained by more than one employer. Paragraphs (c) through (e) of this section set forth the rules for determining service required to be taken into account in the case of a plan or plans maintained by multiple employers, controlled groups of corporations and trades or businesses under common control. Note throughout that every mention of multiple employer plans includes multiemployer plans. See § 2530.210(c)(3). Paragraph (f) of this section sets forth special break in service rules for such plans. Paragraph (g) of this section applies the break in service rules of sections 202(b)(4) and 203(b)(3)(D) of the Act and sections 410(a)(5)(D) and 411(a)(6)(D) of the Code (rule of parity) to such plans.

(c) *Multiple employer plans*—(1) *Eligibility to participate and vesting.* A multiple employer plan shall be treated as if all maintaining employers constitute a single employer so long as an employee is employed in either covered service or contiguous noncovered service. Accordingly, except as referred to in paragraph (a)(1) and provided in paragraph (f) of this section, in determining an employee's service for eligibility to participate and vesting purposes, all covered service with an employer or employers maintaining the plan and all contiguous noncovered service with an employer or employers maintaining the plan shall be taken into account. Thus, for example, if an employee in service covered under a multiple employer plan leaves covered service with one employer maintaining the plan and is employed immediately thereafter in covered service with another employer maintaining the plan, the plan is required to credit all hours of service with both employers for purposes of participation and vesting. If an employee moves from contiguous noncovered to covered service, or from covered service to contiguous noncovered service, with the same employer, the plan is required to credit all hours of service with such employer for purposes of eligibility to participate and vesting.

(2) *Benefit accrual.* A multiple employer plan shall be treated as if all maintaining employers constitute a single employer so long as an employee is employed in covered service. Accordingly, except as referred to in paragraph (a)(2) and provided in paragraph (f) of this section, in determining a participant's service for benefit accrual purposes, all covered service with an employer or employers maintaining the plan shall be taken into account.

(3) *Definitions.* (i) For purposes of this section, the term ''multiple employer plan'' shall mean a multiemployer plan as defined in section 3(37) of the Act and section 414(f) of the Code or a multiple employer plan within the meaning of sections 413 (b) and (c) of the

Code and the regulations issued thereunder. Notwithstanding the preceding sentence, a plan maintained solely by members of the same controlled group of corporations within the meaning of paragraph (d) of this section or by trades or businesses which are under the common control of one person or group of persons within the meaning of paragraph (e) of this section shall not be deemed to be a multiple employer plan for purposes of this section, and such plan is required to apply the rules under this section which are applicable to controlled groups of corporations or commonly controlled trades or businesses respectively.

(ii) For purposes of this section, the term ''covered service'' shall mean service with an employer or employers maintaining the plan within a job classification or class of employees covered under the plan.

(iii) For purposes of this section the term ''noncovered service'' shall mean service with an employer or employers maintaining the plan which is not covered service.

(iv)(A) *General.* For purposes of this section noncovered service shall be deemed ''contiguous'' if (*1*) the noncovered service precedes or follows covered service and (*2*) no quit, discharge, or retirement occurs between such covered service and noncovered service.

(B) *Exception.* Notwithstanding the preceding paragraph, in the case of a controlled group of corporations within the meaning of paragraph (d) of this section or trades or businesses which are under the common control of one person or group of persons within the meaning of paragraph (e) of this section, any transfer of an employee from one member of the controlled group to another member or from one trade or business under common control to another trade or business under the common control of the same person or group of persons shall result in the period of noncovered service which immediately precedes or follows such transfer being deemed ''noncontiguous'' for purposes of paragraph (c) of this section.

DIAGRAM NO. 1. (MULTIPLE EMPLOYER PLAN.)

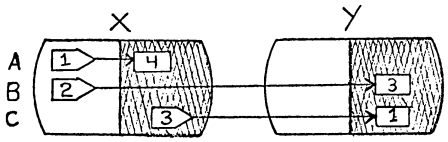

Assume for purposes of diagram No. 1 that X and Y are both employers who are required to contribute to a multiple employer plan and that neither employer maintains any other plan. Covered service is represented by the shaded segments of the diagram. After completing 1 year of noncovered service, employee A immediately enters covered service with X and completes 4 years of covered service. For purposes of eligibility to participate and vesting, the plan is required to credit employee A with 5 years of service with employer X because his period of service with X includes a period of covered service and a period of contiguous noncovered service. On the other hand, employee B, immediately after completing 2 years of noncovered service with X, enters covered service with Y. Because B quit employment with X, his period of noncovered service with X is not contiguous and, therefore, is not required to be taken into account. In the case of employee C, the plan is required to take into account all service with employers X and Y because employee C is employed in covered service with both employers.

DIAGRAM NO. 2. (MULTIPLE EMPLOYER.)

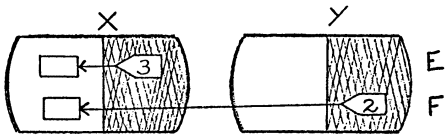

The multiple employer plan rules with respect to noncovered service are illustrated in diagram No. 2. Assume that X and Y are both employers who are required to contribute to a multiple employer plan and that neither employer maintains any other plan. Covered service is represented by the shaded segments of the diagram. Employee E completed 3 years of service with employer X in covered service and then immediately entered noncovered service with X. Because E's noncovered service is contiguous, the plan is required to take into account all service with X for purposes of eligibility to participate and vesting under the multiple employer plan. Employee F does not continue to receive credit; F quit the employment of Y and entered noncovered service with X.

(d) *Controlled groups of corporations.* (1) With respect to a plan maintained by one or more members of a controlled group of corporations (within the meaning of section 1563(a) of the Code, determined without regard to sections 1563(a)(4) and (e)(3)(C), all employees of such corporations shall be treated as employed by a single employer.

(2) Accordingly, except as referred to in paragraph (a)(1) and provided in paragraph (f) of this section, in determining an employee's service for eligibility to participate and vesting purposes, all service with any employer which is a member of the controlled group of corporations shall be taken into account. Except as referred to in paragraph (a)(2) and provided in paragraph (f) of this section, in determining a participant's service for benefit accrual purposes, all service during periods of participation covered under the plan with any employer which is a member of the controlled group of corporations shall be taken into account.

(e) *Commonly controlled trades or businesses.* With respect to a plan maintained only by one or more trades or businesses (whether or not incorporated) which are under common control within the meaning of section 414(c) of the Code and the regulations issued thereunder, all employees of such trades or businesses shall be treated as employed by a single employer. Accordingly, except as referred to in paragraph (a)(1) and provided in paragraph (f) of this section, in determining an employee's service for eligibility to participate and vesting purposes, all service with any employer which is under common control shall be taken into account. Except as referred to in paragraph (a)(2) and provided in paragraph (f) of this section, in determining a participant's service for benefit accrual purposes, all service during periods of participation covered under the plan with any employer which is under common control shall be taken into account.

DIAGRAM NO. 3. (CONTROLLED GROUP OR COMMONLY CONTROLLED TRADE OR BUSINESS.)

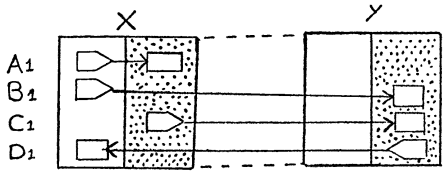

Assume for purposes of diagram No. 3 that X and Y are either members of the same controlled group of corporations or trades or businesses which are under the same common control. The dotted segments of the diagram represent plan coverage under plans separately maintained by X and Y. Neither employer maintains any other plans. Because A1, B1, C1, and D1 have their service with X and Y treated as if X and Y were a single employer, the plans are required to take into account all service with X and Y for eligibility to participate and vesting purposes.

(f) *Special break in service rules.* (1) In addition to service which may be disregarded under the statutory provisions referred to in paragraph (a) of this section, a multiple employer plan may disregard noncontiguous non- covered service.

(2) In the case of a plan maintained solely by one or more members of a controlled group of corporations or one or more trades or businesses which are under common control, if one of the maintaining employers is also a participating employer in a multiple employer plan which includes other employers which are not members of the controlled group or commonly controlled trades or businesses, service with such other employer maintaining the multiple employer plan may be disregarded by the controlled group or commonly controlled plan.

DIAGRAM NO. 4. (BREAK IN SERVICE RULES.)

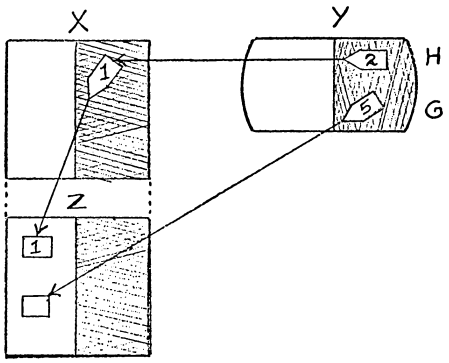

Diagram No. 4 illustrates the break in service rules of paragraph (f) of this section. Assume for purposes of diagram No. 4 that employer Z is controlled by employer X but employer Y's only relation to X and Z is that X, Y, and Z are required to contribute to a multiple employer plan. The multiple employer plan, represented by the shaded segments of the diagram, provides for 100 percent vesting after 10 years. X, Y, and Z maintain no other plans.

Employee G completed 5 years of covered service with employer Y, and then moved to noncovered service with employer Z. G's noncovered service is noncontiguous (see employee F in diagram No. 2 above), and such service may be disregarded for purposes of the multiple employer plan under the rule in paragraph (f)(1).

Employee H completed 2 years of covered service with employer Y and then entered covered service with employer X for 1 year. The multiple employer plan is required to credit H with 3 years of service. H then entered noncovered service with employer Z. H's noncovered service is noncontiguous (see employee F in diagram No. 2 above), and such service may be disregarded for purposes of the multiple employer plan under the rule in paragraph (f)(1).

(g) *Rule of parity*. For purposes of sections 202(b)(4) and 203(b)(3)(D) of the Act and sections 410(a)(5)(D) and 411(a)(6)(D) of the Code, in the case of an employee who is a nonvested participant in employer-derived accrued benefits at the time he incurs a 1-year break in service, years of service completed by such employee before such break are not required to be taken into account if at such time he incurs consecutive 1-year breaks in service which equal or exceed the aggregate number of years of service before such breaks. This is so even though the period of noncontiguous noncovered service with an employer or employers maintaining the plan may subsequently be deemed contiguous as the result of the employee entering covered service with the same employer maintaining the plan and, consequently, such plan may be required to credit such service.

DIAGRAM NO. 5. (RULE OF PARITY)

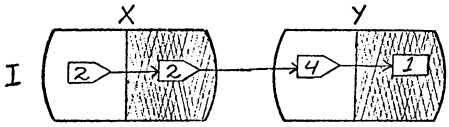

Assume for purposes of diagram No. 5 that X and Y are both employers who are required to contribute to a multiple employer plan which contains a provision applying the rule of parity. Covered service is represented by the shaded segments of the diagram. The plan has 100% vesting after 10 years. X and Y maintain no other plan.

The multiple employer plan credited employee I with 4 years of service with X when he quit employment with X and entered noncovered service with Y. As a result of 4 years of noncontiguous noncovered service with Y, employee I incurred 4 consecutive 1-year breaks in service, so that the multiple employer plan may disregard his prior service (*i.e.*, the 4 years of service with X).

When employee I entered covered service with Y (as a ''new employee''), his 4 years of noncontiguous service with Y became contiguous for purposes of the multiple employer plan. Consequently, after 1 year of covered service with Y, the plan is required to credit employee I with 5 years of service.

(h) *Example*. Under section 203(b)(1)(C) of the Act and section 411(a)(4)(C) of the Code, service with an employer prior to such employer's adoption of the plan need not be taken into account. The following example demonstrates that this rule applies even if an employee is employed in contiguous noncovered service. The example is applicable to any plan subject to the rules of this section. However, for purposes of clarity, the example assumes that X and Y are required to contribute to a multiple employer plan.

Assume that employee D completed 3 years of covered service with employer Y as of the date X adopts the plan. Immediately after X's adoption of the plan D left covered service with Y and D entered covered service with X. His prior covered service with Y is

required to be counted, and D remains a participant.

On the other hand, if D had entered service with X any time prior to X's adoption of the plan and subsequently was covered by the plan when X adopted it, his prior service with Y must also be counted, unless such service may be disregarded under the break in service rules because the period of service with X before X's adoption of the plan was equal to or greater than his prior service with Y. For example, if X adopted the plan three years after D began employment with X, and consequently after D had incurred 3 consecutive 1-year breaks in service, his prior service with Y could be disregarded.

(I) COMPREHENSIVE DIAGRAM. (NO. 6)

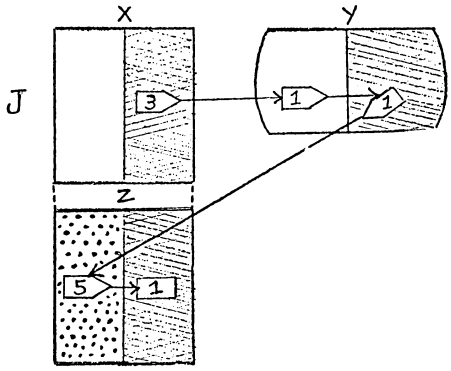

Assume for purposes of diagram No. 6 that employer Z is controlled by employer X within the meaning of paragraph (d) but employer Y's only relation to X and Z is that X, Y and Z are required to contribute to a multiple employer plan. The shaded segments represent coverage under the multiple employer plan which contains a provision applying the rule of parity. The dotted segment represents a separate plan maintained by Z. Both plans have 100% vesting after 10 years.

Employee J completed 3 years of service with employer X in covered service with the multiple employer plan. J then entered noncovered service with Y and remained with Y for 1 year, and thereby incurred a 1-year break in service under the multiple employer plan. J then entered covered service with employer Y, thereby causing the noncovered service with Y to become contiguous. Covered service with X and contiguous noncovered and covered service with Y must be taken into account for purposes of the multiple employer plan; accordingly, that plan is required to credit J with a total of 5 years of service.

J then left service with Y and entered noncovered service (with respect to the multiple employer plan) with Z. J remained in noncovered service with Z (with respect to the multiple employer plan) for 5 years and thereby incurred 5 consecutive 1-year break in service for purposes of the multiple employer plan. Consequently, the prior service with X and Y may be disregarded for purposes of the multiple employer plan.

J then entered covered service under the multiple employer plan with Z and completed 1 year of service. Because the 5 years of noncovered service with Z is contiguous with the 1 year of covered service, the multiple employer plan is now required to credit J with 6 years of service for purposes of eligibility to participate and vesting.

For purposes of Z's controlled group plan (*i.e.*, dotted segment), employee J is entitled to receive credit for 9 years of service. The 3 years of service with X, a member of the controlled group, may not be disregarded under the rule of parity because J incurred only 2 consecutive 1-year breaks in service while employed with Y. When J entered service with Z covered under Z's controlled group plan, the 3 years of service with X were still required to be credited by the controlled group plan. In addition, J must receive credit for the 5 years of service with Z covered under the controlled group plan. Finally, when J moved to service with Z covered under the multiple employer plan the controlled group plan was required to credit J with an additional year of service.

SUBCHAPTER E [RESERVED]

SUBCHAPTER F—FIDUCIARY RESPONSIBILITY UNDER THE EMPLOYEE RETIREMENT INCOME SECURITY ACT OF 1974

PART 2550—RULES AND REGULATIONS FOR FIDUCIARY RESPONSIBILITY

Sec.
2550.401c–1 Definition of ''plan assets''—insurance company general accounts.
2550.403a–1 Establishment of trust.
2550.403b–1 Exemptions from trust requirement.
2550.404a–1 Investment duties.
2550.404a–2 Safe harbor for automatic rollovers to individual retirement plans.
2550.404a–3 Safe harbor for distributions from terminated individual account plans.
2550.404a–4 Selection of annuity providers—safe harbor for individual account plans.
2550.404a–5 Fiduciary requirements for disclosure in participant-directed individual account plans.
2550.404b–1 Maintenance of the indicia of ownership of plan assets outside the jurisdiction of the district courts of the United States.
2550.404c–1 ERISA section 404(c) plans.
2550.404c–5 Fiduciary relief for investments in qualified default investment alternatives.
2550.407a–1 General rule for the acquisition and holding of employer securities and employer real property.
2550.407a–2 Limitation with respect to the acquisition of qualifying employer securities and qualifying employer real property.
2550.407d–5 Definition of the term ''qualifying employer security''.
2550.407d–6 Definition of the term ''employee stock ownership plan''.
2550.408b–1 General statutory exemption for loans to plan participants and beneficiaries who are parties in interest with respect to the plan.
2550.408b–2 General statutory exemption for services or office space.
2550.408b–3 Loans to Employee Stock Ownership Plans.
2550.408b–4 Statutory exemption for investments in deposits of banks or similar financial institutions.
2550.408b–6 Statutory exemption for ancillary services by a bank or similar financial institution.
2550.408b–19 Statutory exemption for cross-trading of securities.
2550.408c–2 Compensation for services.
2550.408e Statutory exemption for acquisition or sale of qualifying employer securities and for acquisition, sale, or lease of qualifying employer real property.
2550.408g–1 Investment advice—participants and beneficiaries.
2550.408g–2 Investment advice—fiduciary election.
2550.412–1 Temporary bonding requirements.

AUTHORITY: 29 U.S.C. 1135; and Secretary of Labor's Order No. 6–2009, 74 FR 21524 (May 7, 2009). Secs. 2550.401b–1, 2550.408b–1, 2550.408b–19, 2550.408g–1, and 2550.408g–2 also issued under sec. 102, Reorganization Plan No. 4 of 1978, 5 U.S.C. App. Sec. 2550.401c–1 also issued under 29 U.S.C. 1101. Sections 2550.404c–1 and 2550.404c–5 also issued under 29 U.S.C. 1104. Sec. 2550.407c–3 also issued under 29 U.S.C. 1107. Sec. 2550.404a–2 also issued under 26 U.S.C. 401 note (sec. 657(c)(2), Pub. L. 107–16, 115 Stat. 38, 136 (2001)). Sec. 2550.408b–1 also issued under 29 U.S.C. 1108(b)(1). Sec. 2550.408b–19 also issued under sec. 611(g)(3), Public Law 109–280, 120 Stat. 780, 975 (2006).

§ 2550.401c–1 Definition of "plan assets"—insurance company general accounts.

(a) *In general.* (1) This section describes, in the case where an insurer issues one or more policies to or for the benefit of an employee benefit plan (and such policies are supported by assets of an insurance company's general account), which assets held by the insurer (other than plan assets held in its separate accounts) constitute plan assets for purposes of Subtitle A, and Parts 1 and 4 of Subtitle B, of Title I of the Employee Retirement Income Security Act of 1974 (ERISA or the Act) and section 4975 of the Internal Revenue Code (the Code), and provides guidance with respect to the application of Title I of the Act and section 4975 of the Code to the general account assets of insurers.

(2) Generally, when a plan has acquired a Transition Policy (as defined in paragraph (h)(6) of this section), the plan's assets include the Transition Policy, but do not include any of the underlying assets of the insurer's general account if the insurer satisfies the requirements of paragraphs (c) through (f) of this section or, if the requirements of paragraphs (c) through (f) were not satisfied, the insurer cures

the non-compliance through satisfaction of the requirements in paragraph (i)(5) of this section.

(3) For purposes of paragraph (a)(2) of this section, a plan's assets will not include any of the underlying assets of the insurer's general account if the insurer fails to satisfy the requirements of paragraphs (c) through (f) of this section solely because of the takeover of the insurer's operations from management as a result of the granting of a petition filed in delinquency proceedings in the State court where the insurer is domiciled.

(b) *Approval by fiduciary independent of the issuer*—(1) *In general.* An independent plan fiduciary who has the authority to manage and control the assets of the plan must expressly authorize the acquisition or purchase of the Transition Policy. For purposes of this paragraph, a fiduciary is not independent if the fiduciary is an affiliate of the insurer issuing the policy.

(2) Notwithstanding paragraph (b)(1) of this section, the authorization by an independent plan fiduciary is not required if:

(i) The insurer is the employer maintaining the plan, or a party in interest which is wholly owned by the employer maintaining the plan; and

(ii) The requirements of section 408(b)(5) of the Act are met.[1]

(c) *Duty of disclosure*—(1) *In general.* An insurer shall furnish the information described in paragraphs (c)(3) and (c)(4) of this section to a plan fiduciary acting on behalf of a plan to which a Transition Policy has been issued. Paragraph (c)(2) of this section describes the style and format of such disclosure. Paragraph (c)(3) of this section describes the content of the initial disclosure. Paragraph (c)(4) of this section describes the information that must be disclosed by the insurer at least once per year for as long as the Transition Policy remains outstanding.

(2) *Style and format.* The disclosure required by this paragraph should be clear and concise and written in a manner calculated to be understood by a plan fiduciary, without relinquishing any of the substantive detail required by paragraphs (c)(3) and (c)(4) of this section. The information does not have to be organized in any particular order but should be presented in a manner which makes it easy to understand the operation of the Transition Policy.

(3) *Initial disclosure.* The insurer must provide to the plan, either as part of an amended policy, or as a separate written document, the disclosure information set forth in paragraphs (c)(3)(i) through (iv) of this section. The disclosure must include all of the following information which is applicable to the Transition Policy:

(i) A description of the method by which any income and any expense of the insurer's general account are allocated to the policy during the term of the policy and upon its termination, including:

(A) A description of the method used by the insurer to determine the fees, charges, expenses or other amounts that are, or may be, assessed against the policyholder or deducted by the insurer from any accumulation fund under the policy, including the extent and frequency with which such fees, charges, expenses or other amounts may be modified by the insurance company;

(B) A description of the method by which the insurer determines the return to be credited to any accumulation fund under the policy, including a description of the method used to allocate income and expenses to lines of business, business segments, and policies within such lines of business and business segments, and a description of how any withdrawals, transfers, or payments will affect the amount of the return credited;

(C) A description of the rights which the policyholder or plan participants have to withdraw or transfer all or a portion of any accumulation fund under the policy, or to apply the amount of a withdrawal to the purchase of guaranteed benefits or to the payment of benefits, and the terms on

[1] The Department notes that, because section 401(c)(1)(D) of the Act and the definition of Transition Policy preclude the issuance of any additional Transition Policies after December 31, 1998, the requirement for independent fiduciary authorization of the acquisition or purchase of the Transition Policy in paragraph (b) no longer has any application.

which such withdrawals or other applications of funds may be made, including a description of any charges, fees, credits, market value adjustments, or any other charges or adjustments, both positive and negative;

(D) A statement of the method used to calculate any charges, fees, credits or market value adjustments described in paragraph (c)(3)(i)(C) of this section, and, upon the request of a plan fiduciary, the insurer must provide within 30 days of the request:

(*1*) The formula actually used to calculate the market value adjustment, if any, to be applied to the unallocated amount in the accumulation fund upon distribution of a lump sum payment to the policyholder, and

(*2*) The actual calculation, as of a specified date that is no earlier than the last contract anniversary preceding the date of the request, of the applicable market value adjustment, including a description of the specific variables used in the calculation, the value of each of the variables, and a general description of how the value of each of those variables was determined.

(*3*) If the formula is based on interest rate guarantees applicable to new contracts of the same class or classes, and the duration of the assets underlying the accumulation fund, the contract must describe the process by which those components are ascertained or obtained. If the formula is based on an interest rate implicit in an index of publicly traded obligations, the identity of the index, the manner in which it is used, and identification of the source or publication where any data used in the formula can be found, must be disclosed;

(ii) A statement describing the expense, income and benefit guarantees under the policy, including a description of the length of such guarantees, and of the insurer's right, if any, to modify or eliminate such guarantees;

(iii) A description of the rights of the parties to make or discontinue contributions under the policy, and of any restrictions (such as timing, minimum or maximum amounts, and penalties and grace periods for late payments) on the making of contributions under the policy, and the consequences of the discontinuance of contributions under the policy; and

(iv) A statement of how any policyholder or participant-initiated withdrawals are to be made: first-in, first-out (FIFO) basis, last-in, first-out (LIFO) basis, pro rata or another basis.

(4) *Annual disclosure.* At least annually and not later than 90 days following the period to which it relates, an insurer shall provide the following information to each plan to which a Transition Policy has been issued:

(i) The balance of any accumulation fund on the first day and last day of the period covered by the annual report;

(ii) Any deposits made to the accumulation fund during such annual period;

(iii) An itemized statement of all income attributed to the policy or added to the accumulation fund during the period, and a description of the method used by the insurer to determine the precise amount of income;

(iv) The actual rate of return credited to the accumulation fund under the policy during such period, stating whether the rate of return was calculated before or after deduction of expenses charged to the accumulation fund;

(v) Any other additions to the accumulation fund during such period;

(vi) An itemized statement of all fees, charges, expenses or other amounts assessed against the policy or deducted from the accumulation fund during the reporting year, and a description of the method used by the insurer to determine the precise amount of the fees, charges and other expenses;

(vii) An itemized statement of all benefits paid, including annuity purchases, to participants and beneficiaries from the accumulation fund;

(viii) The dates on which the additions or subtractions were credited to, or deducted from, the accumulation fund during such period;

(ix) A description, if applicable, of all transactions with affiliates which exceed 1 percent of group annuity reserves of the general account for the prior reporting year;

(x) A statement describing any expense, income and benefit guarantees

under the policy, including a description of the length of such guarantees, and of the insurer's right, if any, to modify or eliminate such guarantees. However, the information on guarantees does not have to be provided annually if it was previously disclosed in the insurance policy and has not been modified since that time;

(xi) A good faith estimate of the amount that would be payable in a lump sum at the end of such period pursuant to the request of a policyholder for payment or transfer of amounts in the accumulation fund under the policy after the insurer deducts any applicable charges and makes any appropriate market value adjustments, upward or downward, under the terms of the policy. However, upon the request of a plan fiduciary, the insurer must provide within 30 days of the request the information contained in paragraph (c)(3)(i)(D) as of a specified date that is no earlier than the last contract anniversary preceding the date of the request; and

(xii) An explanation that the insurer will make available promptly upon request of a plan, copies of the following publicly available financial data or other publicly available reports relating to the financial condition of the insurer:

(A) National Association of Insurance Commissioners Statutory Annual Statement, with Exhibits, General Interrogatories, and Schedule D, Part 1A, Sections 1 and 2 and Schedule S—Part 3E;

(B) Rating agency reports on the financial strength and claims-paying ability of the insurer;

(C) Risk adjusted capital ratio, with a brief description of its derivation and significance, referring to the risk characteristics of both the assets and the liabilities of the insurer;

(D) Actuarial opinion of the insurer's Appointed Actuary certifying the adequacy of the insurer's reserves as required by New York State Insurance Department Regulation 126 and comparable regulations of other States; and

(E) The insurer's most recent SEC Form 10K and Form 10Q (stock companies only).

(d) *Alternative separate account arrangements*—(1) *In general.* An insurer must provide the plan fiduciary with the following additional information at the same time as the initial disclosure required under paragraph (c)(3) of this section:

(i) A statement explaining the extent to which alternative contract arrangements supported by assets of separate accounts of insurers are available to plans;

(ii) A statement as to whether there is a right under the policy to transfer funds to a separate account and the terms governing any such right; and

(iii) A statement explaining the extent to which general account contracts and separate account contracts of the insurer may pose differing risks to the plan.

(2) An insurer will be deemed to comply with the requirements of paragraph (d)(1)(iii) of this section if the disclosure provided to the plan includes the following statement:

a. Contractual arrangements supported by assets of separate accounts may pose differing risks to plans from contractual arrangements supported by assets of general accounts. Under a general account contract, the plan's contributions or premiums are placed in the insurer's general account and commingled with the insurer's corporate funds and assets (excluding separate accounts and special deposit funds). The insurance company combines in its general account premiums received from all of its lines of business. These premiums are pooled and invested by the insurer. General account assets in the aggregate support the insurer's obligations under all of its insurance contracts, including (but not limited to) its individual and group life, health, disability, and annuity contracts. Experience rated general account policies may share in the experience of the general account through interest credits, dividends, or rate adjustments, but assets in the general account are not segregated for the exclusive benefit of any particular policy or obligation. General account assets are also available to the insurer for the conduct of its routine business activities, such as the payment of salaries,

rent, other ordinary business expenses and dividends.

b. An insurance company separate account is a segregated fund which is not commingled with the insurer's general assets. Depending on the particular terms of the separate account contract, income, expenses, gains and losses associated with the assets allocated to a separate account may be credited to or charged against the separate account without regard to other income, expenses, gains, or losses of the insurance company, and the investment results passed through directly to the policyholders. While most, if not all, general account investments are maintained at book value, separate account investments are normally maintained at market value, which can fluctuate according to market conditions. In large measure, the risks associated with a separate account contract depend on the particular assets in the separate account.

c. The plan's legal rights vary under general and separate account contracts. In general, an insurer is subject to ERISA's fiduciary responsibility provisions with respect to the assets of a separate account (other than a separate account registered under the Investment Company Act of 1940) to the extent that the investment performance of such assets is passed directly through to the plan policyholders. ERISA requires insurers, in administering separate account assets, to act solely in the interest of the plan's participants and beneficiaries; prohibits self-dealing and conflicts of interest; and requires insurers to adhere to a prudent standard of care. In contrast, ERISA generally imposes less stringent standards in the administration of general account contracts which were issued on or before December 31, 1998.

d. On the other hand, State insurance regulation is typically more restrictive with respect to general accounts than separate accounts. However, State insurance regulation may not provide the same level of protection to plan policyholders as ERISA regulation. In addition, insurance company general account policies often include various guarantees under which the insurer assumes risks relating to the funding and distribution of benefits. Insurers do not usually provide any guarantees with respect to the investment returns on assets held in separate accounts. Of course, the extent of any guarantees from any general account or separate account contract will depend upon the specific policy terms.

e. Finally, separate accounts and general accounts pose differing risks in the event of the insurer's insolvency. In the event of insolvency, funds in the general account are available to meet the claims of the insurer's general creditors, after payment of amounts due under certain priority claims, including amounts owed to its policyholders. Funds held in a separate account as reserves for its policy obligations, however, may be protected from the claims of creditors other than the policyholders participating in the separate account. Whether separate account funds will be granted this protection will depend upon the terms of the applicable policies and the provisions of any applicable laws in effect at the time of insolvency.

(e) *Termination procedures.* Within 90 days of written notice by a policyholder to an insurer, the insurer must permit the policyholder to exercise the right to terminate or discontinue the policy and to elect to receive without penalty either:

(1) A lump sum payment representing all unallocated amounts in the accumulation fund. For purposes of this paragraph (e)(1), the term penalty does not include a market value adjustment (as defined in paragraph (h)(7)of this section) or the recovery of costs actually incurred which would have been recovered by the insurer but for the termination or discontinuance of the policy, including any unliquidated acquisition expenses, to the extent not previously recovered by the insurer; or

(2) A book value payment of all unallocated amounts in the accumulation fund under the policy in approximately equal annual installments, over a period of no longer than 10 years, together with interest computed at an annual rate which is no less than the annual rate which was credited to the accumulation fund under the policy as of the date of the contract termination or discontinuance, minus 1 percentage point. Notwithstanding paragraphs

(e)(1) and (e)(2) of this section, the insurer may defer, for a period not to exceed 180 days, amounts required to be paid to a policyholder under this paragraph for any period of time during which regular banking activities are suspended by State or federal authorities, a national securities exchange is closed for trading (except for normal holiday closings), or the Securities and Exchange Commission has determined that a state of emergency exists which may make such determination and payment impractical.

(f) *Insurer-initiated amendments.* In the event the insurer makes an insurer-initiated amendment (as defined in paragraph (h)(8) of this section), the insurer must provide written notice to the plan at least 60 days prior to the effective date of the insurer-initiated amendment. The notice must contain a complete description of the amendment and must inform the plan of its right to terminate or discontinue the policy and withdraw all unallocated funds without penalty by sending a written request within such 60 day period to the name and address contained in the notice. The plan must be offered the election to receive either a lump sum or an installment payment as described in paragraph (e)(1) and (e)(2) of this section. An insurer-initiated amendment shall not apply to a contract if the plan fiduciary exercises its right to terminate or discontinue the contract within such 60 day period and to receive a lump sum or installment payment.

(g) *Prudence.* An insurer shall manage those assets of the insurer which are assets of such insurer's general account (irrespective of whether any such assets are plan assets) with the care, skill, prudence and diligence under the circumstances then prevailing that a prudent man acting in a like capacity and familiar with such matters would use in the conduct of an enterprise of a like character and with like aims, taking into account all obligations supported by such enterprise. This prudence standard applies to the conduct of all insurers with respect to policies issued to plans on or before December 31, 1998, and differs from the prudence standard set forth in section 404(a)(1)(B) of the Act. Under the prudence standard provided in this paragraph, prudence must be determined by reference to all of the obligations supported by the general account, not just the obligations owed to plan policyholders. The more stringent standard of prudence set forth in section 404(a)(1)(B) of the Act continues to apply to any obligations which insurers may have as fiduciaries which do not arise from the management of general account assets, as well as to insurers' management of plan assets maintained in separate accounts. The terms of this section do not modify or reduce the fiduciary obligations applicable to insurers in connection with policies issued after December 31, 1998, which are supported by general account assets, including the standard of prudence under section 404(a)(1)(B) of the Act.

(h) *Definitions.* For purposes of this section:

(1) An *affiliate* of an insurer means:

(i) Any person, directly or indirectly, through one or more intermediaries, controlling, controlled by, or under common control with the insurer,

(ii) Any officer of, director of, 5 percent or more partner in, or highly compensated employee (earning 5 percent or more of the yearly wages of the insurer) of, such insurer or of any person described in paragraph (h)(1)(i) of this section including in the case of an insurer, an insurance agent or broker thereof (whether or not such person is a common law employee) if such agent or broker is an employee described in this paragraph or if the gross income received by such agent or broker from such insurer exceeds 5 percent of such agent's gross income from all sources for the year, and

(iii) Any corporation, partnership, or unincorporated enterprise of which a person described in paragraph (h)(1)(ii) of this section is an officer, director, or a 5 percent or more partner.

(2) The term *control* means the power to exercise a controlling influence over the management or policies of a person other than an individual.

(3) The term *guaranteed benefit policy* means a policy described in section 401(b)(2)(B) of the Act and any regulations promulgated thereunder.

(4) The term *insurer* means an insurer as described in section 401(b)(2)(A) of the Act.

(5) The term *accumulation fund* means the aggregate net considerations (*i.e.*, gross considerations less all deductions from such considerations) credited to the Transition Policy plus all additional amounts, including interest and dividends, credited to such Transition Policy less partial withdrawals, benefit payments and less all charges and fees imposed against this accumulated amount under the Transition Policy other than surrender charges and market value adjustments.

(6) The term *Transition Policy* means:

(i) A policy or contract of insurance (other than a guaranteed benefit policy) that is issued by an insurer to, or on behalf of, an employee benefit plan on or before December 31, 1998, and which is supported by the assets of the insurer's general account.

(ii) A policy will not fail to be a Transition Policy merely because the policy is amended or modified:

(A) To comply with the requirements of section 401(c) of the Act and this section; or

(B) Pursuant to a merger, acquisition, demutualization, conversion, or reorganization authorized by applicable State law, provided that the premiums, policy guarantees, and the other terms and conditions of the policy remain the same, except that a membership interest in a mutual insurance company may be eliminated from the policy in exchange for separate consideration (e.g., shares of stock or policy credits).

(7) For purposes of this section, the term *market value adjustment* means an adjustment to the book value of the accumulation fund to accurately reflect the effect on the value of the accumulation fund of its liquidation in the prevailing market for fixed income obligations, taking into account the future cash flows that were anticipated under the policy. An adjustment is a *market value adjustment* within the meaning of this definition only if the insurer has determined the amount of the adjustment pursuant to a method which was previously disclosed to the policyholder in accordance with paragraph (c)(3)(i)(D) of this section, and the method permits both upward and downward adjustments to the book value of the accumulation fund.

(8) The term *insurer-initiated amendment* is defined in paragraphs (h)(8)(i), (ii) and (iii) of this section as:

(i) An amendment to a Transition Policy made by an insurer pursuant to a unilateral right to amend the policy terms that would have a material adverse effect on the policyholder; or

(ii) Any of the following unilateral changes in the insurer's conduct or practices with respect to the policyholder or the accumulation fund under the policy that result in a material reduction of existing or future benefits under the policy, a material reduction in the value of the policy or a material increase in the cost of financing the plan or plan benefits:

(A) A change in the methodology for assessing fees, expenses, or other charges against the accumulation fund or the policyholder;

(B) A change in the methodology used for allocating income between lines of business, or product classes within a line of business;

(C) A change in the methodology used for determining the rate of return to be credited to the accumulation fund under the policy;

(D) A change in the methodology used for determining the amount of any fees, charges, expenses, or market value adjustments applicable to the accumulation fund under the policy in connection with the termination of the contract or withdrawal from the accumulation fund;

(E) A change in the dividend class to which the policy or contract is assigned;

(F) A change in the policyholder's rights in connection with the termination of the policy, withdrawal of funds or the purchase of annuities for plan participants; and

(G) A change in the annuity purchase rates guaranteed under the terms of the contract or policy, unless the new rates are more favorable for the policyholder.

(iii) For purposes of this definition, an insurer-initiated amendment is material if a prudent fiduciary could reasonably conclude that the amendment should be considered in determining

how or whether to exercise any rights with respect to the policy, including termination rights.

(iv) For purposes of this definition, the following amendments or changes are not insurer-initiated amendments:

(A) Any amendment or change which is made with the affirmative consent of the policyholder;

(B) Any amendment or change which is made in order to comply with the requirements of section 401(c) of the Act and this section; or

(C) Any amendment or change which is made pursuant to a merger, acquisition, demutualization, conversion, or reorganization authorized by applicable State law, provided that the premiums, policy guarantees, and the other terms and conditions of the policy remain the same, except that a membership interest in a mutual insurance company may be eliminated from the policy in exchange for separate consideration (e.g., shares of stock or policy credits).

(i) *Limitation on liability*. (1) No person shall be subject to liability under Parts 1 and 4 of Title I of the Act or section 4975 of the Internal Revenue Code of 1986 for conduct which occurred prior to the applicability dates of the regulation on the basis of a claim that the assets of an insurer (other than plan assets held in a separate account) constitute plan assets. Notwithstanding the provisions of this paragraph (i)(1), this section shall not:

(i) Apply to an action brought by the Secretary of Labor pursuant to paragraphs (2) or (5) of section 502(a) of ERISA for a breach of fiduciary responsibility which would also constitute a violation of Federal or State criminal law;

(ii) Preclude the application of any Federal criminal law; or

(iii) Apply to any civil action commenced before November 7, 1995.

(2) Nothing in this section relieves any person from any State law regulating insurance which imposes additional obligations or duties upon insurers to the extent not inconsistent with the provisions of this section. Therefore, nothing in this section should be construed to preclude a State from requiring insurers to make additional disclosures to policyholders, including plans. Nor does this section prohibit a State from imposing additional substantive requirements with respect to the management of general accounts or from otherwise regulating the relationship between the policyholder and the insurer to the extent not inconsistent with the provisions of this section.

(3) Nothing in this section precludes any claim against an insurer or other person for violations of the Act which do not require a finding that the underlying assets of a general account constitute plan assets, regardless of whether the violation relates to a Transition Policy.

(4) If the requirements in paragraphs (c) through (f) of this section are not met with respect to a plan that has purchased or acquired a Transition Policy, and the insurer has not cured the non-compliance through satisfaction of the requirements in paragraph (i)(5) of this section, the plan's assets include an undivided interest in the underlying assets of the insurer's general account for that period of time for which the requirements are not met. However, an insurer's failure to comply with the requirements of this section with respect to any particular Transition Policy will not result in the underlying assets of the general account constituting plan assets with respect to other Transition Policies if the insurer is otherwise in compliance with the requirements contained in this section.

(5) Notwithstanding paragraphs (a)(2) and (i)(4) of this section, a plan's assets will not include an undivided interest in the underlying assets of the insurer's general account if the insurer made reasonable and good faith attempts at compliance with each of the requirements of paragraphs (c) through (f) of this section, and meets each of the following conditions:

(i) The insurer has in place written procedures that are reasonably designed to assure compliance with the requirements of paragraphs (c) through (f) of this section, including procedures reasonably designed to detect any instances of non-compliance.

(ii) No later than 60 days following the earlier of the insurer's detection of an instance of non-compliance or the

receipt of written notice of non-compliance from the plan, the insurer complies with the requirements of paragraphs (c) through (f) of this section. If the insurer has failed to pay a plan the amounts required under paragraphs (e) or (f) of this section within 90 days of receiving written notice of termination or discontinuance of the policy, the insurer must make all corrections and adjustments necessary to restore to the plan the full amounts that the plan would have received but for the insurer's non-compliance within the applicable 60 day period; and

(iii) The insurer makes the plan whole for any losses resulting from the non-compliance as follows:

(A) If the insurer has failed to comply with the disclosure or notice requirements set forth in paragraphs (c), (d) and (f) of this section, then the insurer must make the plan whole for any losses resulting from its non-compliance within the earlier of 60 days of detection by the insurer or sixty days following the receipt of written notice from the plan; and

(B) If the insurer has failed to pay a plan any amounts required under paragraphs (e) or (f) of this section within 90 days of receiving written notice of termination or discontinuance of the policy, the insurer must pay to the plan interest on any amounts restored pursuant to paragraph (i)(5)(ii) of this section at the ''underpayment rate'' as set forth in 26 U.S.C. sections 6621 and 6622. Such interest must be paid within the earlier of 60 days of detection by the insurer or sixty days following receipt of written notice of non-compliance from the plan.

(j) *Applicability dates*—(1) *In general.* Except as provided in paragraphs (j)(2) through (4) of this section, this section is applicable on July 5, 2001.

(2) Paragraph (c) relating to initial disclosures and paragraph (d) relating to separate account disclosures are applicable on July 5, 2000.

(3) The first annual disclosure required under paragraph (c)(4) of this section shall be provided to each plan not later than 18 months following January 5, 2000.

(4) Paragraph (f), relating to insurer-initiated amendments, is applicable on January 5, 2000.

(k) *Effective date.* This section is effective January 5, 2000.

[65 FR 639, Jan. 5, 2000]

§ 2550.403a–1 Establishment of trust.

(a) *In general.* Except as otherwise provided in § 403b–1, all assets of an employee benefit plan shall be held in trust by one or more trustees pursuant to a written trust instrument.

(b) *Specific applications.* (1) The requirements of paragraph (a) of this section will not fail to be satisfied merely because securities of a plan are held in the name of a nominee or in street name, provided such securities are held on behalf of the plan by:

(i) A bank or trust company that is subject to supervision by the United States or a State, or a nominee of such bank or trust company;

(ii) A broker or dealer registered under the Securities Exchange Act of 1934, or a nominee of such broker or dealer; or

(iii) A ''clearing agency,'' as defined in section 3(a)(23) of the Securities Exchange Act of 1934, or its nominee.

(2) Where a corporation described in section 501(c)(2) of the Internal Revenue Code holds property on behalf of a plan, the requirements of paragraph (a) of this section are satisfied with respect to such property if all the stock of such corporation is held in trust on behalf of the plan by one or more trustees.

(3) If the assets of an entity in which a plan invests include plan assets by reason of the plan's investment in the entity, the requirements of paragraph (a) of this section are satisfied with respect to such investment if the indicia of ownership of the plan's interest in the entity are held in trust on behalf of the plan by one or more trustees.

(c) *Requirements concerning trustees.* The trustee or trustees referred to in paragraphs (a) and (b) shall be either named in the trust instrument or in the plan instrument described in section 402(a) of the Act, or appointed by a person who is a named fiduciary (within the meaning of section 402(a)(2) of the Act). Upon acceptance of being named or appointed, the trustee or trustees shall have exclusive authority and discretion to manage and control

the assets of the plan, except to the extent that:

(1) The plan instrument or the trust instrument expressly provides that the trustee or trustees are subject to the direction of a named fiduciary who is not a trustee, in which case the trustees shall be subject to the proper directions of such fiduciary which are made in accordance with the terms of the plan and which are not contrary to the provisions of title I of the Act of chapter XXV of this title, or

(2) Authority to manage, acquire or dispose of assets of the plan is delegated to one or more investment managers (within the meaning of section 3(38) of the Act) pursuant to section 402(c)(3) of the Act.

[47 FR 21247, May 18, 1982]

§ 2550.403b–1 Exemptions from trust requirement.

(a) *Statutory exemptions.* The requirements of section 403(a) of the Act and section 403a–1 shall not apply—

(1) To any assets of a plan which consist of insurance contracts or policies issued by an insurance company qualified to do business in a State;

(2) To any assets of such an insurance company or any assets of a plan which are held by such an insurance company;

(3) To a plan—

(i) Some or all of the participants of which are employees described in section 401(c)(1) of the Internal Revenue Code of 1954; or

(ii) Which consists of one or more individual retirement accounts described in section 408 of the Internal Revenue Code of 1954. To the extent that such plan's assets are held in one or more custodial accounts which qualify under section 401(f) or 408(h) of such Code, whichever is applicable;

(4) To a contract established and maintained under section 403(b) of the Internal Revenue Code of 1954 to the extent that the assets of the contract are held in one or more custodial accounts pursuant to section 403(b)(7) of such Code.

(5) To any plan, fund or program under which an employer, all of whose stock is directly or indirectly owned by employees, former employees or their beneficiaries, proposes through an unfunded arrangement to compensate retired employees for benefits which were forfeited by such employees under a pension plan maintained by a former employer prior to the date such pension plan became subject to the Act.

[47 FR 21247, May 18, 1982]

§ 2550.404a–1 Investment duties.

(a) *In general.* Section 404(a)(1)(B) of the Employee Retirement Income Security Act of 1974 (the Act) provides, in part, that a fiduciary shall discharge his duties with respect to a plan with the care, skill, prudence, and diligence under the circumstances then prevailing that a prudent man acting in a like capacity and familiar with such matters would use in the conduct of an enterprise of a like character and with like aims.

(b) *Investment duties.* (1) With regard to an investment or investment course of action taken by a fiduciary of an employee benefit plan pursuant to his investment duties, the requirements of section 404(a)(1)(B) of the Act set forth in subsection (a) of this section are satisfied if the fiduciary:

(i) Has given appropriate consideration to those facts and circumstances that, given the scope of such fiduciary's investment duties, the fiduciary knows or should know are relevant to the particular investment or investment course of action involved, including the role the investment or investment course of action plays in that portion of the plan's investment portfolio with respect to which the fiduciary has investment duties; and

(ii) Has acted accordingly.

(2) For purposes of paragraph (b)(1) of this section, ''appropriate consideration'' shall include, but is not necessarily limited to,

(i) A determination by the fiduciary that the particular investment or investment course of action is reasonably designed, as part of the portfolio (or, where applicable, that portion of the plan portfolio with respect to which the fiduciary has investment duties), to further the purposes of the plan, taking into consideration the risk of loss and the opportunity for gain (or other return) associated with the investment or investment course of action, and

(ii) Consideration of the following factors as they relate to such portion of the portfolio:

(A) The composition of the portfolio with regard to diversification;

(B) The liquidity and current return of the portfolio relative to the anticipated cash flow requirements of the plan; and

(C) The projected return of the portfolio relative to the funding objectives of the plan.

(3) An investment manager appointed, pursuant to the provisions of section 402(c)(3) of the Act, to manage all or part of the assets of a plan, may, for purposes of compliance with the provisions of paragraphs (b)(1) and (2) of this section, rely on, and act upon the basis of, information pertaining to the plan provided by or at the direction of the appointing fiduciary, if—

(i) Such information is provided for the stated purpose of assisting the manager in the performance of his investment duties, and

(ii) The manager does not know and has no reason to know that the information is incorrect.

(c) *Definitions*. For purposes of this section:

(1) The term *investment duties* means any duties imposed upon, or assumed or undertaken by, a person in connection with the investment of plan assets which make or will make such person a fiduciary of an employee benefit plan or which are performed by such person as a fiduciary of an employee benefit plan as defined in section 3(21)(A)(i) or (ii) of the Act.

(2) The term *investment course of action* means any series or program of investments or actions related to a fiduciary's performance of his investment duties.

(3) The term *plan* means an employee benefit plan to which title I of the Act applies.

[44 FR 37225, June 26, 1979]

§ 2550.404a–2 Safe harbor for automatic rollovers to individual retirement plans.

(a) *In general*. (1) Pursuant to section 657(c) of the Economic Growth and Tax Relief Reconciliation Act of 2001, Public Law 107–16, June 7, 2001, 115 Stat. 38, this section provides a safe harbor under which a fiduciary of an employee pension benefit plan subject to Title I of the Employee Retirement Income Security Act of 1974, as amended (the Act), 29 U.S.C. 1001 *et seq.*, will be deemed to have satisfied his or her fiduciary duties under section 404(a) of the Act in connection with an automatic rollover of a mandatory distribution described in section 401(a)(31)(B) of the Internal Revenue Code of 1986, as amended (the Code). This section also provides a safe harbor for certain other mandatory distributions not described in section 401(a)(31)(B) of the Code.

(2) The standards set forth in this section apply solely for purposes of determining whether a fiduciary meets the requirements of this safe harbor. Such standards are not intended to be the exclusive means by which a fiduciary might satisfy his or her responsibilities under the Act with respect to rollovers of mandatory distributions described in paragraphs (c) and (d) of this section.

(b) *Safe harbor*. A fiduciary that meets the conditions of paragraph (c) or paragraph (d) of this section is deemed to have satisfied his or her duties under section 404(a) of the Act with respect to both the selection of an individual retirement plan provider and the investment of funds in connection with the rollover of mandatory distributions described in those paragraphs to an individual retirement plan, within the meaning of section 7701(a)(37) of the Code.

(c) *Conditions*. With respect to an automatic rollover of a mandatory distribution described in section 401(a)(31)(B) of the Code, a fiduciary shall qualify for the safe harbor described in paragraph (b) of this section if:

(1) The present value of the nonforfeitable accrued benefit, as determined under section 411(a)(11) of the Code, does not exceed the maximum amount under section 401(a)(31)(B) of the Code;

(2) The mandatory distribution is to an individual retirement plan within the meaning of section 7701(a)(37) of the Code;

(3) In connection with the distribution of rolled-over funds to an individual retirement plan, the fiduciary

enters into a written agreement with an individual retirement plan provider that provides:

(i) The rolled-over funds shall be invested in an investment product designed to preserve principal and provide a reasonable rate of return, whether or not such return is guaranteed, consistent with liquidity;

(ii) For purposes of paragraph (c)(3)(i) of this section, the investment product selected for the rolled-over funds shall seek to maintain, over the term of the investment, the dollar value that is equal to the amount invested in the product by the individual retirement plan;

(iii) The investment product selected for the rolled-over funds shall be offered by a state or federally regulated financial institution, which shall be: A bank or savings association, the deposits of which are insured by the Federal Deposit Insurance Corporation; a credit union, the member accounts of which are insured within the meaning of section 101(7) of the Federal Credit Union Act; an insurance company, the products of which are protected by State guaranty associations; or an investment company registered under the Investment Company Act of 1940;

(iv) All fees and expenses attendant to an individual retirement plan, including investments of such plan, (e.g., establishment charges, maintenance fees, investment expenses, termination costs and surrender charges) shall not exceed the fees and expenses charged by the individual retirement plan provider for comparable individual retirement plans established for reasons other than the receipt of a rollover distribution subject to the provisions of section 401(a)(31)(B) of the Code; and

(v) The participant on whose behalf the fiduciary makes an automatic rollover shall have the right to enforce the terms of the contractual agreement establishing the individual retirement plan, with regard to his or her rolled-over funds, against the individual retirement plan provider.

(4) Participants have been furnished a summary plan description, or a summary of material modifications, that describes the plan's automatic rollover provisions effectuating the requirements of section 401(a)(31)(B) of the Code, including an explanation that the mandatory distribution will be invested in an investment product designed to preserve principal and provide a reasonable rate of return and liquidity, a statement indicating how fees and expenses attendant to the individual retirement plan will be allocated (*i.e.*, the extent to which expenses will be borne by the account holder alone or shared with the distributing plan or plan sponsor), and the name, address and phone number of a plan contact (to the extent not otherwise provided in the summary plan description or summary of material modifications) for further information concerning the plan's automatic rollover provisions, the individual retirement plan provider and the fees and expenses attendant to the individual retirement plan; and

(5) Both the fiduciary's selection of an individual retirement plan and the investment of funds would not result in a prohibited transaction under section 406 of the Act, unless such actions are exempted from the prohibited transaction provisions by a prohibited transaction exemption issued pursuant to section 408(a) of the Act.

(d) *Mandatory distributions of $1,000 or less*. A fiduciary shall qualify for the protection afforded by the safe harbor described in paragraph (b) of this section with respect to a mandatory distribution of one thousand dollars ($1,000) or less described in section 411(a)(11) of the Code, provided there is no affirmative distribution election by the participant and the fiduciary makes a rollover distribution of such amount into an individual retirement plan on behalf of such participant in accordance with the conditions described in paragraph (c) of this section, without regard to the fact that such rollover is not described in section 401(a)(31)(B) of the Code.

(e) *Effective date*. This section shall be effective and shall apply to any rollover of a mandatory distribution made on or after March 28, 2005.

[69 FR 58028, Sept. 28, 2004]

§ 2550.404a–3 Safe harbor for distributions from terminated individual account plans.

(a) *General.* (1) This section provides a safe harbor under which a fiduciary (including a qualified termination administrator, within the meaning of § 2578.1(g) of this chapter) of a terminated individual account plan, as described in paragraph (a)(2) of this section, will be deemed to have satisfied its duties under section 404(a) of the Employee Retirement Income Security Act of 1974, as amended (the Act)), 29 U.S.C. 1001 *et seq.*, in connection with a distribution described in paragraph (b) of this section.

(2) This section shall apply to an individual account plan only if—

(i) In the case of an individual account plan that is an abandoned plan within the meaning of § 2578.1 of this chapter, such plan was intended to be maintained as a tax-qualified plan in accordance with the requirements of section 401(a), 403(a), or 403(b) of the Internal Revenue Code of 1986 (Code); or

(ii) In the case of any other individual account plan, such plan is maintained in accordance with the requirements of section 401(a), 403(a), or 403 (b) of the Code at the time of the distribution.

(3) The standards set forth in this section apply solely for purposes of determining whether a fiduciary meets the requirements of this safe harbor. Such standards are not intended to be the exclusive means by which a fiduciary might satisfy his or her responsibilities under the Act with respect to making distributions described in this section.

(b) *Distributions.* This section shall apply to a distribution from a terminated individual account plan if, in connection with such distribution:

(1) The participant or beneficiary, on whose behalf the distribution will be made, was furnished notice in accordance with paragraph (e) of this section or, in the case of an abandoned plan, § 2578.1(d)(2)(vi) of this chapter, and

(2) The participant or beneficiary failed to elect a form of distribution within 30 days of the furnishing of the notice described paragraph (b)(1) of this section.

(c) *Safe harbor.* A fiduciary that meets the conditions of paragraph (d) of this section shall, with respect to a distribution described in paragraph (b) of this section, be deemed to have satisfied its duties under section 404(a) of the Act with respect to the distribution of benefits, selection of a transferee entity described in paragraph (d)(1)(i) through (iii) of this section, and the investment of funds in connection with the distribution.

(d) *Conditions.* A fiduciary shall qualify for the safe harbor described in paragraph (c) of this section if:

(1) The distribution described in paragraph (b) of this section is made—

(i) To an individual retirement plan within the meaning of section 7701(a)(37) of the Code;

(ii) In the case of a distribution on behalf of a designated beneficiary (as defined by section 401(a)(9)(E) of the Code) who is not the surviving spouse of the deceased participant, to an inherited individual retirement plan (within the meaning of section 402(c)(11) of the Code) established to receive the distribution on behalf of the nonspouse beneficiary; or

(iii) In the case of a distribution by a qualified termination administrator with respect to which the amount to be distributed is $1000 or less and that amount is less than the minimum amount required to be invested in an individual retirement plan product offered by the qualified termination administrator to the public at the time of the distribution, to:

(A) An interest-bearing federally insured bank or savings association account in the name of the participant or beneficiary,

(B) The unclaimed property fund of the State in which the participant's or beneficiary's last known address is located, or

(C) An individual retirement plan (described in paragraph (d)(1)(i) or (d)(1)(ii) of this section) offered by a financial institution other than the qualified termination administrator to the public at the time of the distribution.

(2) Except with respect to distributions to State unclaimed property funds (described in paragraph

(d)(1)(iii)(B) of this section), the fiduciary enters into a written agreement with the transferee entity which provides:

(i) The distributed funds shall be invested in an investment product designed to preserve principal and provide a reasonable rate of return, whether or not such return is guaranteed, consistent with liquidity (except that distributions under paragraph (d)(1)(iii)(A) of this section to a bank or savings account are not required to be invested in such a product);

(ii) For purposes of paragraph (d)(2)(i) of this section, the investment product shall—

(A) Seek to maintain, over the term of the investment, the dollar value that is equal to the amount invested in the product by the individual retirement plan (described in paragraph (d)(1)(i) or (d)(1)(ii) of this section), and

(B) Be offered by a State or federally regulated financial institution, which shall be: a bank or savings association, the deposits of which are insured by the Federal Deposit Insurance Corporation; a credit union, the member accounts of which are insured within the meaning of section 101(7) of the Federal Credit Union Act; an insurance company, the products of which are protected by State guaranty associations; or an investment company registered under the Investment Company Act of 1940;

(iii) All fees and expenses attendant to the transferee plan (described in paragraph (d)(1)(i) or (d)(1)(ii) of this section) or account (described in paragraph (d)(1)(iii)(A) of this section), including investments of such plan, (e.g., establishment charges, maintenance fees, investment expenses, termination costs and surrender charges), shall not exceed the fees and expenses charged by the provider of the plan or account for comparable plans or accounts established for reasons other than the receipt of a distribution under this section; and

(iv) The participant or beneficiary on whose behalf the fiduciary makes a distribution shall have the right to enforce the terms of the contractual agreement establishing the plan (described in paragraph (d)(1)(i) or (d)(1)(ii) of this section) or account (described in paragraph (d)(1)(iii)(A) of this section), with regard to his or her transferred account balance, against the plan or account provider.

(3) Both the fiduciary's selection of a transferee plan (described in paragraph (d)(1)(i) or (d)(1)(ii) of this section) or account (described in paragraph (d)(1)(iii)(A) of this section) and the investment of funds would not result in a prohibited transaction under section 406 of the Act, unless such actions are exempted from the prohibited transaction provisions by a prohibited transaction exemption issued pursuant to section 408(a) of the Act.

(e) *Notice to participants and beneficiaries*—(1) *Content.* Each participant or beneficiary of the plan shall be furnished a notice written in a manner calculated to be understood by the average plan participant and containing the following:

(i) The name of the plan;

(ii) A statement of the account balance, the date on which the amount was calculated, and, if relevant, an indication that the amount to be distributed may be more or less than the amount stated in the notice, depending on investment gains or losses and the administrative cost of terminating the plan and distributing benefits;

(iii) A description of the distribution options available under the plan and a request that the participant or beneficiary elect a form of distribution and inform the plan administrator (or other fiduciary) identified in paragraph (e)(1)(vii) of this section of that election;

(iv) A statement explaining that, if a participant or beneficiary fails to make an election within 30 days from receipt of the notice, the plan will distribute the account balance of the participant or beneficiary to an individual retirement plan (*i.e.*, individual retirement account or annuity described in paragraph (d)(1)(i) or (d)(1)(ii) of this section) and the account balance will be invested in an investment product designed to preserve principal and provide a reasonable rate of return and liquidity;

(v) A statement explaining what fees, if any, will be paid from the participant or beneficiary's individual retirement plan (described in paragraph

(d)(1)(i) or (d)(1)(ii) of this section), if such information is known at the time of the furnishing of this notice;

(vi) The name, address and phone number of the individual retirement plan (described in paragraph (d)(1)(i) or (d)(1)(ii) of this section) provider, if such information is known at the time of the furnishing of this notice; and

(vii) The name, address, and telephone number of the plan administrator (or other fiduciary) from whom a participant or beneficiary may obtain additional information concerning the termination.

(2) *Manner of furnishing notice.* (i) For purposes of paragraph (e)(1) of this section, a notice shall be furnished to each participant or beneficiary in accordance with the requirements of § 2520.104b–1(b)(1) of this chapter to the last known address of the participant or beneficiary; and

(ii) In the case of a notice that is returned to the plan as undeliverable, the plan fiduciary shall, consistent with its duties under section 404(a)(1) of ERISA, take steps to locate the participant or beneficiary and provide notice prior to making the distribution. If, after such steps, the fiduciary is unsuccessful in locating and furnishing notice to a participant or beneficiary, the participant or beneficiary shall be deemed to have been furnished the notice and to have failed to make an election within 30 days for purposes of paragraph (b)(2) of this section.

(f) *Model notice.* The appendix to this section contains a model notice that may be used to discharge the notification requirements under this section. Use of the model notice is not mandatory. However, use of an appropriately completed model notice will be deemed to satisfy the requirements of paragraph (e)(1) of this section.

APPENDIX TO § 2550.404a-3

NOTICE OF PLAN TERMINATION

[*Date of notice*]

[*Name and last known address of plan participant or beneficiary*]

Re: [*Name of plan*]

Dear [*Name of plan participant or beneficiary*]:

This notice is to inform you that [*name of the plan*] (the Plan) has been terminated and we are in the process of winding it up.

We have determined that you have an interest in the Plan, either as a plan participant or beneficiary. Your account balance in the Plan on [*date*] is/was [*account balance*]. We will be distributing this money as permitted under the terms of the Plan and federal regulations. {*If applicable, insert the following sentence:* The actual amount of your distribution may be more or less than the amount stated in this notice depending on investment gains or losses and the administrative cost of terminating your plan and distributing your benefits.}

Your distribution options under the Plan are {*add a description of the Plan's distribution options*}. It is very important that you elect one of these forms of distribution and inform us of your election. The process for informing us of this election is {*enter a description of the Plan's election process*}.

If you do not make an election within 30 days from your receipt of this notice, your account balance will be transferred directly to an individual retirement plan (inherited individual retirement plan in the case of a nonspouse beneficiary). {*If the name of the provider of the individual retirement plan is known, include the following sentence:* The name of the provider of the individual retirement plan is [*name, address and phone number of the individual retirement plan provider*].} Pursuant to federal law, your money in the individual retirement plan would then be invested in an investment product designed to preserve principal and provide a reasonable rate of return and liquidity. {*If fee information is known, include the following sentence:* Should your money be transferred into an individual retirement plan, [*name of the financial institution*] charges the following fees for its services: {*add a statement of fees, if any, that will be paid from the participant or beneficiary's individual retirement plan*}.}

For more information about the termination, your account balance, or distribution options, please contact [*name, address, and telephone number of the plan administrator or other appropriate contact person*].

Sincerely,
[*Name of plan administrator or appropriate designee*]

[71 FR 20850, Apr. 21, 2006; 71 FR 29219, May 19, 2006; 72 FR 7520, Feb. 15, 2007; 73 FR 58463, Oct. 7, 2008]

§ 2550.404a–4 Selection of annuity providers—safe harbor for individual account plans.

(a) *Scope.* (1) This section establishes a safe harbor for satisfying the fiduciary duties under section 404(a)(1)(B) of the Employee Retirement Income Security Act of 1974 (ERISA), 29 U.S.C. 1104–1114, in selecting an annuity provider and contract for benefit distributions from an individual account plan. For guidance concerning the selection of an annuity provider for defined benefit plans see 29 CFR 2509.95–1.

(2) This section sets forth an optional means for satisfying the fiduciary responsibilities under section 404(a)(1)(B) of ERISA with respect to the selection of an annuity provider or contract for benefit distributions. This section does not establish minimum requirements or the exclusive means for satisfying these responsibilities.

(b) *Safe harbor.* The selection of an annuity provider for benefit distributions from an individual account plan satisfies the requirements of section 404(a)(1)(B) of ERISA if the fiduciary:

(1) Engages in an objective, thorough and analytical search for the purpose of identifying and selecting providers from which to purchase annuities;

(2) Appropriately considers information sufficient to assess the ability of the annuity provider to make all future payments under the annuity contract;

(3) Appropriately considers the cost (including fees and commissions) of the annuity contract in relation to the benefits and administrative services to be provided under such contract;

(4) Appropriately concludes that, at the time of the selection, the annuity provider is financially able to make all future payments under the annuity contract and the cost of the annuity contract is reasonable in relation to the benefits and services to be provided under the contract; and

(5) If necessary, consults with an appropriate expert or experts for purposes of compliance with the provisions of this paragraph (b).

(c) *Time of selection.* For purposes of paragraph (b) of this section, the ''time of selection'' may be either:

(1) The time that the annuity provider and contract are selected for distribution of benefits to a specific participant or beneficiary; or

(2) The time that the annuity provider is selected to provide annuity contracts at future dates to participants or beneficiaries, provided that the selecting fiduciary periodically reviews the continuing appropriateness of the conclusion described in paragraph (b)(4) of this section, taking into account the factors described in paragraphs (b)(2), (3) and (5) of this section. For purposes of this paragraph (c)(2), a fiduciary is not required to review the appropriateness of this conclusion with respect to any annuity contract purchased for any specific participant or beneficiary.

[73 FR 58449, Oct. 7, 2008]

§ 2550.404a–5 Fiduciary requirements for disclosure in participant-directed individual account plans.

(a) *General.* The investment of plan assets is a fiduciary act governed by the fiduciary standards of section 404(a)(1)(A) and (B) of the Employee Retirement Income Security Act of 1974, as amended (ERISA), 29 U.S.C. 1001 *et seq.* (all section references herein are references to ERISA unless otherwise indicated). Pursuant to section 404(a)(1)(A) and (B), fiduciaries must discharge their duties with respect to the plan prudently and solely in the interest of participants and beneficiaries. When the documents and instruments governing an individual account plan, described in paragraph (b)(2) of this section, provide for the allocation of investment responsibilities to participants or beneficiaries, the plan administrator, as defined in section 3(16), must take steps to ensure, consistent with section 404(a)(1)(A) and (B), that such participants and beneficiaries, on a regular and periodic basis, are made aware of their rights and responsibilities with respect to the investment of assets held in, or contributed to, their accounts and are provided sufficient information regarding the plan, including fees and expenses, and regarding

designated investment alternatives, including fees and expenses attendant thereto, to make informed decisions with regard to the management of their individual accounts.

(b) *Satisfaction of duty to disclose.* (1) In general. The plan administrator of a covered individual account plan must comply with the disclosure requirements set forth in paragraphs (c) and (d) of this section with respect to each participant or beneficiary that, pursuant to the terms of the plan, has the right to direct the investment of assets held in, or contributed to, his or her individual account. Compliance with paragraphs (c) and (d) of this section will satisfy the duty to make the regular and periodic disclosures described in paragraph (a) of this section, provided that the information contained in such disclosures is complete and accurate. A plan administrator will not be liable for the completeness and accuracy of information used to satisfy these disclosure requirements when the plan administrator reasonably and in good faith relies on information received from or provided by a plan service provider or the issuer of a designated investment alternative.

(2) *Covered individual account plan.* For purposes of paragraph (b)(1) of this section, a ''covered individual account plan'' is any participant-directed individual account plan as defined in section 3(34) of ERISA, except that such term shall not include plans involving individual retirement accounts or individual retirement annuities described in sections 408(k) (''simplified employee pension'') or 408(p) (''simple retirement account'') of the Internal Revenue Code of 1986.

(c) *Disclosure of plan-related information.* A plan administrator (or person designated by the plan administrator to act on its behalf) shall provide to each participant or beneficiary the plan-related information described in paragraphs (c)(1) through (4) of this section, based on the latest information available to the plan.

(1) *General.* (i) On or before the date on which a participant or beneficiary can first direct his or her investments and at least annually thereafter:

(A) An explanation of the circumstances under which participants and beneficiaries may give investment instructions;

(B) An explanation of any specified limitations on such instructions under the terms of the plan, including any restrictions on transfer to or from a designated investment alternative;

(C) A description of or reference to plan provisions relating to the exercise of voting, tender and similar rights appurtenant to an investment in a designated investment alternative as well as any restrictions on such rights;

(D) An identification of any designated investment alternatives offered under the plan;

(E) An identification of any designated investment managers; and

(F) A description of any ''brokerage windows,'' ''self-directed brokerage accounts,'' or similar plan arrangements that enable participants and beneficiaries to select investments beyond those designated by the plan.

(ii) If there is a change to the information described in paragraph (c)(1)(i)(A) through (F) of this section, each participant and beneficiary must be furnished a description of such change at least 30 days, but not more than 90 days, in advance of the effective date of such change, unless the inability to provide such advance notice is due to events that were unforeseeable or circumstances beyond the control of the plan administrator, in which case notice of such change must be furnished as soon as reasonably practicable.

(2) *Administrative expenses.* (i)(A) On or before the date on which a participant or beneficiary can first direct his or her investments and at least annually thereafter, an explanation of any fees and expenses for general plan administrative services (e.g., legal, accounting, recordkeeping), which may be charged against the individual accounts of participants and beneficiaries and are not reflected in the total annual operating expenses of any designated investment alternative, as well as the basis on which such charges will be allocated (e.g., pro rata, per capita) to, or affect the balance of, each individual account.

(B) If there is a change to the information described in paragraph

(c)(2)(i)(A) of this section, each participant and beneficiary must be furnished a description of such change at least 30 days, but not more than 90 days, in advance of the effective date of such change, unless the inability to provide such advance notice is due to events that were unforeseeable or circumstances beyond the control of the plan administrator, in which case notice of such change must be furnished as soon as reasonably practicable.

(ii) At least quarterly, a statement that includes:

(A) The dollar amount of the fees and expenses described in paragraph (c)(2)(i)(A) of this section that are actually charged (whether by liquidating shares or deducting dollars) during the preceding quarter to the participant's or beneficiary's account for such services;

(B) A description of the services to which the charges relate (e.g., plan administration, including recordkeeping, legal, accounting services); and

(C) If applicable, an explanation that, in addition to the fees and expenses disclosed pursuant to paragraph (c)(2)(ii) of this section, some of the plan's administrative expenses for the preceding quarter were paid from the total annual operating expenses of one or more of the plan's designated investment alternatives (e.g., through revenue sharing arrangements, Rule 12b–1 fees, sub-transfer agent fees).

(3) *Individual expenses.* (i)(A) On or before the date on which a participant or beneficiary can first direct his or her investments and at least annually thereafter, an explanation of any fees and expenses that may be charged against the individual account of a participant or beneficiary on an individual, rather than on a plan-wide, basis (e.g., fees attendant to processing plan loans or qualified domestic relations orders, fees for investment advice, fees for brokerage windows, commissions, front- or back-end loads or sales charges, redemption fees, transfer fees and similar expenses, and optional rider charges in annuity contracts) and which are not reflected in the total annual operating expenses of any designated investment alternative.

(B) If there is a change to the information described in paragraph (c)(3)(i)(A) of this section, each participant and beneficiary must be furnished a description of such change at least 30 days, but not more than 90 days, in advance of the effective date of such change, unless the inability to provide such advance notice is due to events that were unforeseeable or circumstances beyond the control of the plan administrator, in which case notice of such change must be furnished as soon as reasonably practicable.

(ii) At least quarterly, a statement that includes:

(A) The dollar amount of the fees and expenses described in paragraph (c)(3)(i)(A) of this section that are actually charged (whether by liquidating shares or deducting dollars) during the preceding quarter to the participant's or beneficiary's account for individual services; and

(B) A description of the services to which the charges relate (e.g., loan processing fee).

(4) *Disclosures on or before first investment.* The requirements of paragraphs (c)(1)(i), (c)(2)(i)(A), (c)(3)(i)(A) of this section to furnish information on or before the date on which a participant or beneficiary can first direct his or her investments may be satisfied by furnishing to the participant or beneficiary the most recent annual disclosure furnished to participants and beneficiaries pursuant those paragraphs and any updates to the information furnished to participants and beneficiaries pursuant to paragraphs (c)(1)(ii), (c)(2)(i)(B) and (c)(3)(i)(B) of this section.

(d) *Disclosure of investment-related information.* The plan administrator (or person designated by the plan administrator to act on its behalf), based on the latest information available to the plan, shall:

(1) *Information to be provided automatically.* Except as provided in paragraph (i) of this section, furnish to each participant or beneficiary on or before the date on which he or she can first direct his or her investments and at least annually thereafter, the following information with respect to each designated investment alternative offered under the plan—

(i) *Identifying information.* Such information shall include:

(A) The name of each designated investment alternative; and

(B) The type or category of the investment (e.g., money market fund, balanced fund (stocks and bonds), large-cap stock fund, employer stock fund, employer securities).

(ii) *Performance data.* (A) For designated investment alternatives with respect to which the return is not fixed, the average annual total return of the investment for 1-, 5-, and 10-calendar year periods (or for the life of the alternative, if shorter) ending on the date of the most recently completed calendar year; as well as a statement indicating that an investment's past performance is not necessarily an indication of how the investment will perform in the future; and

(B) For designated investment alternatives with respect to which the return is fixed or stated for the term of the investment, both the fixed or stated annual rate of return and the term of the investment. If, with respect to such a designated investment alternative, the issuer reserves the right to adjust the fixed or stated rate of return prospectively during the term of the contract or agreement, the current rate of return, the minimum rate guaranteed under the contract, if any, and a statement advising participants and beneficiaries that the issuer may adjust the rate of return prospectively and how to obtain (e.g., telephone or Web site) the most recent rate of return required under this section.

(iii) *Benchmarks.* For designated investment alternatives with respect to which the return is not fixed, the name and returns of an appropriate broad-based securities market index over the 1-, 5-, and 10-calendar year periods (or for the life of the alternative, if shorter) comparable to the performance data periods provided under paragraph (d)(1)(ii)(A) of this section, and which is not administered by an affiliate of the investment issuer, its investment adviser, or a principal underwriter, unless the index is widely recognized and used.

(iv) *Fee and expense information.* (A) For designated investment alternatives with respect to which the return is not fixed:

(*1*) The amount and a description of each shareholder-type fee (fees charged directly against a participant's or beneficiary's investment, such as commissions, sales loads, sales charges, deferred sales charges, redemption fees, surrender charges, exchange fees, account fees, and purchase fees, which are not included in the total annual operating expenses of any designated investment alternative) and a description of any restriction or limitation that may be applicable to a purchase, transfer, or withdrawal of the investment in whole or in part (such as round trip, equity wash, or other restrictions);

(*2*) The total annual operating expenses of the investment expressed as a percentage (*i.e.*, expense ratio), calculated in accordance with paragraph (h)(5) of this section;

(*3*) The total annual operating expenses of the investment for a one-year period expressed as a dollar amount for a $1,000 investment (assuming no returns and based on the percentage described in paragraph (d)(1)(iv)(A)(*2*) of this section);

(*4*) A statement indicating that fees and expenses are only one of several factors that participants and beneficiaries should consider when making investment decisions; and

(*5*) A statement that the cumulative effect of fees and expenses can substantially reduce the growth of a participant's or beneficiary's retirement account and that participants and beneficiaries can visit the Employee Benefit Security Administration's Web site for an example demonstrating the long-term effect of fees and expenses.

(B) For designated investment alternatives with respect to which the return is fixed for the term of the investment, the amount and a description of any shareholder-type fees and a description of any restriction or limitation that may be applicable to a purchase, transfer or withdrawal of the investment in whole or in part.

(v) *Internet Web site address.* An Internet Web site address that is sufficiently specific to provide participants and beneficiaries access to the following information regarding the designated investment alternative:

(A) The name of the alternative's issuer;

(B) The alternative's objectives or goals in a manner consistent with Securities and Exchange Commission Form N–1A or N–3, as appropriate;

(C) The alternative's principal strategies (including a general description of the types of assets held by the investment) and principal risks in a manner consistent with Securities and Exchange Commission Form N–1A or N–3, as appropriate;

(D) The alternative's portfolio turnover rate in a manner consistent with Securities and Exchange Commission Form N–1A or N–3, as appropriate;

(E) The alternative's performance data described in paragraph (d)(1)(ii) of this section updated on at least a quarterly basis, or more frequently if required by other applicable law; and

(F) The alternative's fee and expense information described in paragraph (d)(1)(iv) of this section.

(vi) *Glossary*. A general glossary of terms to assist participants and beneficiaries in understanding the designated investment alternatives, or an Internet Web site address that is sufficiently specific to provide access to such a glossary along with a general explanation of the purpose of the address.

(vii) *Annuity options*. If a designated investment alternative is part of a contract, fund or product that permits participants or beneficiaries to allocate contributions toward the future purchase of a stream of retirement income payments guaranteed by an insurance company, the information set forth in paragraph (i)(2)(i) through (i)(2)(vii) of this section with respect to the annuity option, to the extent such information is not otherwise included in investment-related fees and expenses described in paragraph (d)(1)(iv).

(viii) *Disclosures on or before first investment*. The requirement in paragraph (d)(1) of this section to provide information to a participant or beneficiary on or before the date on which the participant or beneficiary can first direct his or her investments may be satisfied by furnishing to the participant or beneficiary the most recent annual disclosure furnished to participants and beneficiaries pursuant to paragraph (d)(1) of this section.

(2) *Comparative format*. (i) Furnish the information described in paragraph (d)(1) and, if applicable, paragraph (i) of this section in a chart or similar format that is designed to facilitate a comparison of such information for each designated investment alternative available under the plan and prominently displays the date, and that includes:

(A) A statement indicating the name, address, and telephone number of the plan administrator (or a person or persons designated by the plan administrator to act on its behalf) to contact for the provision of the information required by paragraph (d)(4) of this section;

(B) A statement that additional investment-related information (including more current performance information) is available at the listed Internet Web site addresses (*see* paragraph (d)(1)(v) of this section); and

(C) A statement explaining how to request and obtain, free of charge, paper copies of the information required to be made available on a Web site pursuant to paragraph (d)(1)(v), paragraph (i)(2)(vi), relating to annuity options, or paragraph (i)(3), relating to fixed-return investments, of this section.

(ii) Nothing in this section shall preclude a plan administrator from including additional information that the plan administrator determines appropriate for such comparisons, provided such information is not inaccurate or misleading.

(3) *Information to be provided subsequent to investment*. Furnish to each investing participant or beneficiary, subsequent to an investment in a designated investment alternative, any materials provided to the plan relating to the exercise of voting, tender and similar rights appurtenant to the investment, to the extent that such rights are passed through to such participant or beneficiary under the terms of the plan.

(4) *Information to be provided upon request*. Furnish to each participant or

beneficiary, either at the times specified in paragraph (d)(1), or upon request, the following information relating to designated investment alternatives—

(i) Copies of prospectuses (or, alternatively, any short-form or summary prospectus, the form of which has been approved by the Securities and Exchange Commission) for the disclosure of information to investors by entities registered under either the Securities Act of 1933 or the Investment Company Act of 1940, or similar documents relating to designated investment alternatives that are provided by entities that are not registered under either of these Acts;

(ii) Copies of any financial statements or reports, such as statements of additional information and shareholder reports, and of any other similar materials relating to the plan's designated investment alternatives, to the extent such materials are provided to the plan;

(iii) A statement of the value of a share or unit of each designated investment alternative as well as the date of the valuation; and

(iv) A list of the assets comprising the portfolio of each designated investment alternative which constitute plan assets within the meaning of 29 CFR 2510.3–101 and the value of each such asset (or the proportion of the investment which it comprises).

(e) *Form of disclosure.* (1) The information required to be disclosed pursuant to paragraphs (c)(1)(i), (c)(2)(i)(A), and (c)(3)(i)(A) of this section may be provided as part of the plan's summary plan description furnished pursuant to ERISA section 102 or as part of a pension benefit statement furnished pursuant to ERISA section 105(a)(1)(A)(i), if such summary plan description or pension benefit statement is furnished at a frequency that comports with paragraph (c)(1)(i) of this section.

(2) The information required to be disclosed pursuant to paragraphs (c)(2)(ii) and (c)(3)(ii) of this section may be included as part of a pension benefit statement furnished pursuant to ERISA section 105(a)(1)(A)(i).

(3) A plan administrator that uses and accurately completes the model in the Appendix, taking into account each designated investment alternative offered under the plan, will be deemed to have satisfied the requirements of paragraph (d)(2) of this section.

(4) Except as otherwise explicitly required herein, fees and expenses may be expressed in terms of a monetary amount, formula, percentage of assets, or per capita charge.

(5) The information required to be prepared by the plan administrator for disclosure under this section shall be written in a manner calculated to be understood by the average plan participant.

(f) *Selection and monitoring.* Nothing herein is intended to relieve a fiduciary from its duty to prudently select and monitor providers of services to the plan or designated investment alternatives offered under the plan.

(g) *Manner of furnishing. Reserved.*

(h) *Definitions.* For purposes of this section, the term—

(1) *At least annually thereafter* means at least once in any 12-month period, without regard to whether the plan operates on a calendar or fiscal year basis.

(2) *At least quarterly* means at least once in any 3-month period, without regard to whether the plan operates on a calendar or fiscal year basis.

(3) *Average annual total return* means the average annual compounded rate of return that would equate an initial investment in a designated investment alternative to the ending redeemable value of that investment calculated with the before tax methods of computation prescribed in Securities and Exchange Commission Form N–1A, N–3, or N–4, as appropriate, except that such method of computation may exclude any front-end, deferred or other sales loads that are waived for the participants and beneficiaries of the covered individual account plan.

(4) *Designated investment alternative* means any investment alternative designated by the plan into which participants and beneficiaries may direct the investment of assets held in, or contributed to, their individual accounts. The term ''designated investment alternative'' shall not include ''brokerage windows,'' ''self-directed brokerage accounts,'' or similar plan arrangements that enable participants and

beneficiaries to select investments beyond those designated by the plan.

(5) *Total annual operating expenses* means:

(i) In the case of a designated investment alternative that is registered under the Investment Company Act of 1940, the annual operating expenses and other asset-based charges before waivers and reimbursements (e.g., investment management fees, distribution fees, service fees, administrative expenses, separate account expenses, mortality and expense risk fees) that reduce the alternative's rate of return, expressed as a percentage, calculated in accordance with the required Securities and Exchange Commission form, e.g., Form N–1A (open-end management investment companies) or Form N–3 or N–4 (separate accounts offering variable annuity contracts); or

(ii) In the case of a designated investment alternative that is not registered under the Investment Company Act of 1940, the sum of the fees and expenses described in paragraphs (h)(5)(ii)(A) through (C) of this section before waivers and reimbursements, for the alternative's most recently completed fiscal year, expressed as a percentage of the alternative's average net asset value for that year—

(A) Management fees as described in the Securities and Exchange Commission Form N–1A that reduce the alternative's rate of return,

(B) Distribution and/or servicing fees as described in the Securities and Exchange Commission Form N–1A that reduce the alternative's rate of return, and

(C) Any other fees or expenses not included in paragraphs (h)(5)(ii)(A) or (B) of this section that reduce the alternative's rate of return (e.g., externally negotiated fees, custodial expenses, legal expenses, accounting expenses, transfer agent expenses, recordkeeping fees, administrative fees, separate account expenses, mortality and expense risk fees), excluding brokerage costs described in Item 21 of Securities and Exchange Commission Form N–1A.

(i) *Special rules*. The rules set forth in this paragraph apply solely for purposes of paragraph (d)(1) of this section.

(1) *Qualifying employer securities*. In the case of designated investment alternatives designed to invest in, or primarily in, qualifying employer securities, within the meaning of section 407 of ERISA, the following rules shall apply—

(i) In lieu of the requirements of paragraph (d)(1)(v)(C) of this section (relating to principal strategies and principal risks), provide an explanation of the importance of a well-balanced and diversified investment portfolio.

(ii) The requirements of paragraph (d)(1)(v)(D) of this section (relating to portfolio turnover rate) do not apply to such designated investment alternatives.

(iii) The requirements of paragraph (d)(1)(v)(F) of this section (relating to fee and expense information) do not apply to such designated investment alternatives, unless the designated investment alternative is a fund with respect to which participants or beneficiaries acquire units of participation, rather than actual shares, in exchange for their investment.

(iv) The requirements of paragraph (d)(1)(iv)(A)(*2*) of this section (relating to total annual operating expenses expressed as a percentage) do not apply to such designated investment alternatives, unless the designated investment alternative is a fund with respect to which participants or beneficiaries acquire units of participation, rather than actual shares, in exchange for their investment.

(v) The requirements of paragraph (d)(1)(iv)(A)(*3*) of this section (relating to total annual operating expenses expressed as a dollar amount per $1,000 invested) do not apply to such designated investment alternatives, unless the designated investment alternative is a fund with respect to which participants or beneficiaries acquire units of participation, rather than actual shares, in exchange for their investment.

(vi)(A) With respect to the requirement in paragraph (d)(1)(ii)(A) of this section (relating to performance data for 1-, 5-, and 10-year periods), the definition of ''average annual total return'' as defined in paragraph (i)(1)(vi)(B) of this section shall apply to such designated investment alternatives in lieu

of the definition in paragraph (h)(3) of this section if the qualifying employer securities are publicly traded on a national exchange or generally recognized market and the designated investment alternative is not a fund with respect to which participants or beneficiaries acquire units of participation, rather than actual shares, in exchange for their investment.

(B) The term ''average annual total return'' means the change in value of an investment in one share of stock on an annualized basis over a specified period, calculated by taking the sum of the dividends paid during the measurement period, assuming reinvestment, plus the difference between the stock price (consistent with ERISA section 3(18)) at the end and at the beginning of the measurement period, and dividing by the stock price at the beginning of the measurement period; reinvestment of dividends is assumed to be in stock at market prices at approximately the same time actual dividends are paid.

(C) The definition of ''average annual total return'' in paragraph (i)(1)(vi)(B) of this section shall apply to such designated investment alternatives consisting of employer securities that are not publicly traded on a national exchange or generally recognized market, unless the designated investment alternative is a fund with respect to which participants or beneficiaries acquire units of participation, rather than actual shares, in exchange for their investment. Changes in value shall be calculated using principles similar to those set forth in paragraph (i)(1)(vi)(B) of this section.

(2) *Annuity options.* In the case of a designated investment alternative that is a contract, fund or product that permits participants or beneficiaries to allocate contributions toward the current purchase of a stream of retirement income payments guaranteed by an insurance company, the plan administrator shall, in lieu of the information required by paragraphs (d)(1)(i) through (d)(1)(v), provide each participant or beneficiary the following information with respect to each such option:

(i) The name of the contract, fund or product;

(ii) The option's objectives or goals (e.g., to provide a stream of fixed retirement income payments for life);

(iii) The benefits and factors that determine the price (e.g., age, interest rates, form of distribution) of the guaranteed income payments;

(iv) Any limitations on the ability of a participant or beneficiary to withdraw or transfer amounts allocated to the option (e.g., lock-ups) and any fees or charges applicable to such withdrawals or transfers;

(v) Any fees that will reduce the value of amounts allocated by participants or beneficiaries to the option, such as surrender charges, market value adjustments, and administrative fees;

(vi) A statement that guarantees of an insurance company are subject to its long-term financial strength and claims-paying ability; and

(vii) An Internet Web site address that is sufficiently specific to provide participants and beneficiaries access to the following information—

(A) The name of the option's issuer and of the contract, fund or product;

(B) Description of the option's objectives or goals;

(C) Description of the option's distribution alternatives/guaranteed income payments (e.g., payments for life, payments for a specified term, joint and survivor payments, optional rider payments), including any limitations on the right of a participant or beneficiary to receive such payments;

(D) Description of costs and/or factors taken into account in determining the price of benefits under an option's distribution alternatives/guaranteed income payments (e.g., age, interest rates, other annuitization assumptions);

(E) Description of any limitations on the right of a participant or beneficiary to withdraw or transfer amounts allocated to the option and any fees or charges applicable to a withdrawal or transfer; and

(F) Description of any fees that will reduce the value of amounts allocated by participants or beneficiaries to the option (e.g., surrender charges, market value adjustments, administrative fees).

(3) *Fixed-return investments.* In the case of a designated investment alternative with respect to which the return is fixed for the term of the investment, the plan administrator shall, in lieu of complying with the requirements of paragraph (d)(1)(v) of this section, provide an Internet Web site address that is sufficiently specific to provide participants and beneficiaries access to the following information—

(i) The name of the alternative's issuer;

(ii) The alternatives objectives or goals (e.g., to provide stability of principal and guarantee a minimum rate of return);

(iii) The alternative's performance data described in paragraph (d)(1)(ii)(B) of this section updated on at least a quarterly basis, or more frequently if required by other applicable law;

(iv) The alternative's fee and expense information described in paragraph (d)(1)(iv)(B) of this section.

(4) *Target date or similar funds. Reserved.*

(j) *Dates.* (1) *Effective date.* This section shall be effective on December 20, 2010.

(2) *Applicability date.* This section shall apply to covered individual account plans for plan years beginning on or after November 1, 2011.

(3) *Transitional rules.*

(i) (A) Notwithstanding paragraphs (b), (c) and (d) of this section, the initial disclosures required on or before the date on which a participant or beneficiary can first direct his or her investments must be furnished no later than the later of 60 days after such applicability date or 60 days after the effective date of 29 CFR 2550.408b–2(c).

(B) Notwithstanding paragraphs (b) and (c) of this section, the initial disclosures required under paragraphs (c)(2)(ii) and (c)(3)(ii) of this section must be furnished no later than 45 days after the end of the quarter in which the disclosure referred to in paragraph (j)(3)(i)(A) of this section was required to be furnished to participants and beneficiaries.

(ii) For plan years beginning before October 1, 2021, if a plan administrator reasonably and in good faith determines that it does not have the information on expenses attributable to the plan that is necessary to calculate, in accordance with paragraph (h)(3) of this section, the 5-year and 10-year average annual total returns for a designated investment alternative that is not registered under the Investment Company Act of 1940, the plan administrator may use a reasonable estimate of such expenses or the plan administrator may use the most recently reported total annual operating expenses of the designated investment alternative as a substitute for such expenses. When a plan administrator uses a reasonable estimate or the most recently reported total annual operating expenses as a substitute for actual expenses pursuant to this paragraph, the administrator shall inform participants of the basis on which the returns were determined. Nothing in this section requires disclosure of returns for periods before the inception of a designated investment alternative.

APPENDIX to §2550.404a-5 – Model Comparative Chart

ABC Corporation 401k Retirement Plan

Investment Options – January 1, 20XX

This document includes important information to help you compare the investment options under your retirement plan. If you want additional information about your investment options, you can go to the specific Internet Web site address shown below or you can contact [insert name of plan administrator or designee] at [insert telephone number and address]. A free paper copy of the information available on the Web site[s] can be obtained by contacting [insert name of plan administrator or designee] at [insert telephone number].

Document Summary

This document has 3 parts. Part I consists of performance information for plan investment options. This part shows you how well the investments have performed in the past. Part II shows you the fees and expenses you will pay if you invest in an option. Part III contains information about the annuity options under your retirement plan.

Part I. Performance Information

Table 1 focuses on the performance of investment options that do not have a fixed or stated rate of return. Table 1 shows how these options have performed over time and allows you to compare them with an appropriate benchmark for the same time periods. Past performance does not guarantee how the investment option will perform in the future. Your investment in these options could lose money. Information about an option's principal risks is available on the Web site[s].

Table 1—Variable Return Investments

Name/ Type of Option	Average Annual Total Return as of 12/31/XX				Benchmark			
	1yr.	5yr.	10yr.	Since Inception	1yr.	5yr.	10yr.	Since Inception
Equity Funds								
A Index Fund/ S&P 500 www. website address	26.5%	.34%	-1.03%	9.25%	26.46%	.42%	-.95%	9.30%
					S&P 500			
B Fund/ Large Cap www. website address	27.6%	.99%	N/A	2.26%	27.80%	1.02%	N/A	2.77%
					US Prime Market 750 Index			
C Fund/ Int'l Stock www. website address	36.73%	5.26%	2.29%	9.37%	40.40%	5.40%	2.40%	12.09%
					MSCI EAFE			
D Fund/ Mid Cap www. website address	40.22%	2.28%	6.13%	3.29%	46.29%	2.40%	-.52%	4.16%
					Russell Midcap			
Bond Funds								
E Fund/ Bond Index www. website address	6.45%	4.43%	6.08%	7.08%	5.93%	4.97%	6.33%	7.01%
					Barclays Cap. Aggr. Bd.			
Other								
F Fund/ GICs	.72%	3.36%	3.11%	5.56%	1.8%	3.1%	3.3%	5.75%

www. website address					3-month US T-Bill Index				
G Fund/ Stable Value www. website address	4.36%	4.64%	5.07%	3.75%	1.8%	3.1%	3.3%	4.99%	3-month US T-Bill Index
Generations 2020/ Lifecycle Fund www. website address	27.94%	N/A	N/A	2.45%	26.46%	N/A	N/A	3.09%	S&P 500
					23.95%	N/A	N/A	3.74%	Generations 2020 Composite Index*

*Generations 2020 composite index is a combination of a total market index and a US aggregate bond index proportional to the equity/bond allocation in the Generations 2020 Fund.

Table 2 focuses on the performance of investment options that have a fixed or stated rate of return. Table 2 shows the annual rate of return of each such option, the term or length of time that you will earn this rate of return, and other information relevant to performance.

Table 2—Fixed Return Investments

Name/ Type of Option	Return	Term	Other
H 200X/ GIC www. website address	4%	2 Yr.	The rate of return does not change during the stated term.
I LIBOR Plus/ Fixed-Type Investment Account www. website address	LIBOR +2%	Quarterly	The rate of return on 12/31/xx was 2.45%. This rate is fixed quarterly, but will never fall below a guaranteed minimum rate of 2%. Current rate of return information is available on the option's Web site or at 1-800-yyy-zzzz.
J Financial Services Co./ Fixed Account Investment www. website address	3.75%	6 Mos.	The rate of return on 12/31/xx was 3.75%. This rate of return is fixed for six months. Current rate of return information is available on the option's Web site or at 1-800-yyy-zzzz.

Part II. Fee and Expense Information

Table 3 shows fee and expense information for the investment options listed in Table1 and Table 2. Table 3 shows the Total Annual Operating Expenses of the options in Table 1. Total Annual Operating Expenses are expenses that reduce the rate of return of the investment option. Table 3 also shows Shareholder-type Fees. These fees are in addition to Total Annual Operating Expenses.

Table 3—Fees and Expenses

Name / Type of Option	Total Annual Operating Expenses		Shareholder-Type Fees
	As a %	Per $1000	
Equity Funds			
A Index Fund/ S&P 500	0.18%	$1.80	$20 annual service charge subtracted from investments held in this option if valued at less than $10,000.
B Fund/ Large Cap	2.45%	$24.50	2.25% deferred sales charge subtracted from amounts withdrawn within 12 months of purchase.
C Fund/ International	0.79%	$7.90	5.75% sales charge subtracted from amounts invested.

Stock		
D Fund/ Mid Cap ETF	0.20% $2.00	4.25% sales charge subtracted from amounts withdrawn.
Bond Funds		
E Fund/ Bond Index	0.50% $5.00	N/A
Other		
F Fund/ GICs	0.46% $4.60	10% charge subtracted from amounts withdrawn within 18 months of initial investment.
G Fund/ Stable Value	0.65% $6.50	Amounts withdrawn may not be transferred to a competing option for 90 days after withdrawal.
Generations 2020/ Lifecycle Fund	1.50% $15.00	Excessive trading restricts additional purchases (other than contributions and loan repayments) for 85 days.
Fixed Return Investments		
H 200X / GIC	N/A	12% charge subtracted from amounts withdrawn before maturity.
I LIBOR Plus/ Fixed-Type Invest Account	N/A	5% contingent deferred sales charge subtracted from amounts withdrawn; charge reduced by 1% on 12-month anniversary of each investment.
J Financial Serv Co. / Fixed Account Investment	N/A	90 days of interest subtracted from amounts withdrawn before maturity.

The cumulative effect of fees and expenses can substantially reduce the growth of your retirement savings. Visit the Department of Labor's Web site for an example showing the long-term effect of fees and expenses at http://www.dol.gov/ebsa/publications/401k employee.html. Fees and expenses are only one of many factors to consider when you decide to invest in an option. You may also want to think about whether an investment in a particular option, along with your other investments, will help you achieve your financial goals.

Part III. Annuity Information

Table 4 focuses on the annuity options under the plan. Annuities are insurance contracts that allow you to receive a guaranteed stream of payments at regular intervals, usually beginning when you retire and lasting for your entire life. Annuities are issued by insurance companies. Guarantees of an insurance company are subject to its long-term financial strength and claims-paying ability.

Table 4—Annuity Options

Name	Objectives / Goals	Pricing Factors	Restrictions / Fees
Lifetime Income Option www. website address	To provide a guaranteed stream of income for your life, based on shares you acquire while you work. At age 65, you will receive monthly payments of $10 for each share you own, for your life. For example, if	The cost of each share depends on your age and interest rates when you buy it. Ordinarily the closer you are to retirement, the more it will cost you to buy a share.	Payment amounts are based on your life expectancy only and would be reduced if you choose a spousal joint and survivor benefit. You will pay a 25%

	you own 30 shares at age 65, you will receive $300 per month over your life.	The cost includes a guaranteed death benefit payable to a spouse or beneficiary if you die before payments begin. The death benefit is the total amount of your contributions, less any withdrawals.	surrender charge for any amount you withdraw before annuity payments begin. If your income payments are less than $50 per month, the option's issuer may combine payments and pay you less frequently, or return to you the larger of your net contributions or the cash-out value of your income shares.
Generations 2020 Variable Annuity Option www. website address	To provide a guaranteed stream of income for your life, or some other period of time, based on your account balance in the Generations 2020 Lifecycle Fund. This option is available through a variable annuity contract that your plan has with ABC Insurance Company.	You have the right to elect fixed annuity payments in the form of a life annuity, a joint and survivor annuity, or a life annuity with a term certain, but the payment amounts will vary based on the benefit you choose. The cost of this right is included in the Total Annual Operating Expenses of the Generations 2020 Lifecycle Fund, listed in Table 3 above. The cost also includes a guaranteed death benefit payable to a spouse or beneficiary if you die before payments begin. The death benefit is the greater of your account balance or contributions, less any withdrawals.	Maximum surrender charge of 8% of account balance. Maximum transfer fee of $30 for each transfer over 12 in a year. Annual service charge of $50 for account balances below $100,000.

Please visit www.ABCPlanglossary.com for a glossary of investment terms relevant to the investment options under this plan. This glossary is intended to help you better understand your options.

[75 FR 64937, Oct. 20, 2010, as amended at 76 FR 42542, July 19, 2011]

§ 2550.404b–1 Maintenance of the indicia of ownership of plan assets outside the jurisdiction of the district courts of the United States.

(a) No fiduciary may maintain the indicia of ownership of any assets of a plan outside the jurisdiction of the district courts of the United States, unless:

(1) Such assets are:

(i) Securities issued by a person, as defined in section 3(9) of the Employee Retirement Income Security Act of 1974 (Act) (other than an individual), which is not organized under the laws of the United States or a State and

does not have its principal place of business within the United States;

(ii) Securities issued by a government other than the government of the United States or of a State, or any political subdivision, agency or instrumentality of such a government;

(iii) Securities issued by a person, as defined in section 3(9) of the Act (other than an individual), the principal trading market for which securities is outside the jurisdiction of the district courts of the United States; or

(iv) Currency issued by a government other than the government of the United States if such currency is maintained outside the jurisdiction of the district courts of the United States solely as an incident to the purchase, sale or maintenance of securities described in paragraph (a)(1) of this section; and

(2)(i) Such assets are under the management and control of a fiduciary which is a corporation or partnership organized under the laws of the United States or a State, which fiduciary has its principal place of business within the United States and which is—

(A) A bank as defined in section 202 (a)(2) of the Investment Advisers Act of 1940 that has, as of the last day of its most recent fiscal year, equity capital in excess of $1,000,000;

(B) An insurance company which is qualified under the laws of more than one State to manage, acquire, or dispose of any asset of a plan, which company has, as of the last day of its most recent fiscal year, net worth in excess of $1,000,000 and which is subject to supervision and examination by the State authority having supervision over insurance companies; or

(C) An investment adviser registered under the Investment Advisers Act of 1940 that has, as of the last day of its most recent fiscal year, total client assets under its management and control in excess $50,000,000 and either

(*1*) Shareholders' or partners' equity in excess of $750,000 or

(*2*) All of its obligations and liabilities assumed or guaranteed by a person described in paragraph (a)(2)(i)(A), (B), or (C)(*1*) or (a)(2)(ii)(A)(*2*) of this section; or

(ii) Such indicia of ownership are either

(A) In the physical possession of, or, as a result of normal business operations, are in transit to the physical possession of, a person which is organized under the laws of the United States or a State, which person has its principal place of business in the United States and which is—

(*1*) A bank as defined in section 202(a)(2) of the Investment Advisers Act of 1940 that has, as of the last day of its most recent fiscal year, equity capital in excess of $1,000,000;

(*2*) A broker or dealer registered under the Securities Exchange Act of 1934 that has, as of the last day of its most recent fiscal year, net worth in excess of $750,000; or

(*3*) A broker or dealer registered under the Securities Exchange Act of 1934 that has all of its obligations and liabilities assumed or guaranteed by a person described in paragraph (a)(2)(i)(A), (B), or (C)(*1*) or (a)(2)(ii)(A)(*2*) of this section; or

(B) Maintained by a broker or dealer, described in paragraph (a)(2)(ii)(A)(*2*) or (*3*) of this section, in the custody of an entity designated by the Securities and Exchange Commission as a ''satisfactory control location'' with respect to such broker or dealer pursuant to Rule 15c3–3 under the Securities Exchange Act of 1934, provided that:

(*1*) Such entity holds the indicia of ownership as agent for the broker or dealer, and

(*2*) Such broker or dealer is liable to the plan to the same extent it would be if it retained the physical possession of the indicia of ownership pursuant to paragraph (a)(2)(ii)(A) of this section.

(C) Maintained by a bank described in paragraph (a)(2)(ii)(A)(*1*), in the custody of an entity that is a foreign securities depository, foreign clearing agency which acts as a securities depository, or foreign bank, which entity is supervised or regulated by a government agency or regulatory authority in the foreign jurisdiction having authority over such depositories, clearing agencies or banks, provided that:

(*1*) The foreign entity holds the indicia of ownership as agent for the bank;

(*2*) The bank is liable to the plan to the same extent it would be if it retained the physical possession of the

indicia of ownership within the United States;

(*3*) The indicia of ownership are not subject to any right, charge, security interest, lien or claim of any kind in favor of the foreign entity except for their safe custody or administration;

(*4*) Beneficial ownership of the assets represented by the indicia of ownership is freely transferable without the payment of money or value other than for safe custody or administration; and

(*5*) Upon request by the plan fiduciary who is responsible for the selection and retention of the bank, the bank identifies to such fiduciary the name, address and principal place of business of the foreign entity which acts as custodian for the plan pursuant to this paragraph (a)(2)(ii)(C), and the name and address of the governmental agency or other regulatory authority that supervises or regulates that foreign entity.

(b) Notwithstanding any requirement of paragraph (a) of this section, a fiduciary with respect to a plan may maintain in Canada the indicia of ownership of plan assets which are attributable to a contribution made on behalf of a plan participant who is a citizen or resident of Canada, if such indicia of ownership must remain in Canada in order for the plan to qualify for and maintain tax exempt status under the laws of Canada or to comply with other applicable laws of Canada or any Province of Canada.

(c) For purposes of this regulation:

(1) The term *management and control* means the power to direct the acquisition or disposition through purchase, sale, pledging, or other means; and

(2) The term *depository* means any company, or agency or instrumentality of government, that acts as a custodian of securities in connection with a system for the central handling of securities whereby all securities of a particular class or series of any issuer deposited within the system are treated as fungible and may be transferred, loaned, or pledged by bookkeeping entry without physical delivery of securities certificates.

[42 FR 54124, Oct. 4, 1977, as amended at 46 FR 1267, Jan. 6, 1981]

§ 2550.404c–1 ERISA section 404(c) plans.

(a) *In general.* (1) Section 404(c) of the Employee Retirement Income Security Act of 1974 (ERISA or the Act) provides that if a pension plan that provides for individual accounts permits a participant or beneficiary to exercise control over assets in his account and that participant or beneficiary in fact exercises control over assets in his account, then the participant or beneficiary shall not be deemed to be a fiduciary by reason of his exercise of control and no person who is otherwise a fiduciary shall be liable for any loss, or by reason of any breach, which results from such exercise of control. This section describes the kinds of plans that are ''ERISA section 404(c) plans,'' the circumstances in which a participant or beneficiary is considered to have exercised independent control over the assets in his account as contemplated by section 404(c), and the consequences of a participant's or beneficiary's exercise of control.

(2) The standards set forth in this section are applicable solely for the purpose of determining whether a plan is an ERISA section 404(c) plan and whether a particular transaction engaged in by a participant or beneficiary of such plan is afforded relief by section 404(c). Such standards, therefore, are not intended to be applied in determining whether, or to what extent, a plan which does not meet the requirements for an ERISA section 404(c) plan or a fiduciary with respect to such a plan satisfies the fiduciary responsibility or other provisions of title I of the Act.

(b) *ERISA section 404(c) plans*—(1) *In general.* An ''ERISA section 404(c) Plan'' is an individual account plan described in section 3(34) of the Act that:

(i) Provides an opportunity for a participant or beneficiary to exercise control over assets in his individual account (see paragraph (b)(2) of this section); and

(ii) Provides a participant or beneficiary an opportunity to choose, from a broad range of investment alternatives, the manner in which some or all of the assets in his account are invested (see paragraph (b)(3) of this section).

(2) *Opportunity to exercise control.* (i) a plan provides a participant or beneficiary an opportunity to exercise control over assets in his account only if:

(A) Under the terms of the plan, the participant or beneficiary has a reasonable opportunity to give investment instructions (in writing or otherwise, with opportunity to obtain written confirmation of such instructions) to an identified plan fiduciary who is obligated to comply with such instructions except as otherwise provided in paragraph (b)(2)(ii)(B) and (d)(2)(ii) of this section; and

(B) The participant or beneficiary is provided or has the opportunity to obtain sufficient information to make informed investment decisions with regard to investment alternatives available under the plan, and incidents of ownership appurtenant to such investments. For purposes of this paragraph, a participant or beneficiary will be considered to have sufficient information if the participant or beneficiary is provided by an identified plan fiduciary (or a person or persons designated by the plan fiduciary to act on his behalf):

(*1*) An explanation that the plan is intended to constitute a plan described in section 404(c) of the Employee Retirement Income Security Act, and 29 CFR 2550.404c–1, and that the fiduciaries of the plan may be relieved of liability for any losses which are the direct and necessary result of investment instructions given by such participant or beneficiary;

(*2*) The information required pursuant to 29 CFR 2550.404a–5; and

(*3*) In the case of plans which offer an investment alternative which is designed to permit a participant or beneficiary to directly or indirectly acquire or sell any employer security (employer security alternative), a description of the procedures established to provide for the confidentiality of information relating to the purchase, holding and sale of employer securities, and the exercise of voting, tender and similar rights, by participants and beneficiaries, and the name, address and phone number of the plan fiduciary responsible for monitoring compliance with the procedures (*see* paragraphs (d)(2)(ii)(E)(*4*)(*vii*), (*viii*) and (*ix*) of this section).

(ii) A plan does not fail to provide an opportunity for a participant or beneficiary to exercise control over his individual account merely because it—

(A) *Imposes charges for reasonable expenses.* A plan may charge participants' and beneficiaries' accounts for the reasonable expenses of carrying out investment instructions, provided that procedures are established under the plan to periodically inform such participants and beneficiaries of actual expenses incurred with respect to their respective individual accounts;

(B) *Permits a fiduciary to decline to implement investment instructions by participants and beneficiaries.* A fiduciary may decline to implement participant and beneficiary instructions which are described at paragraph (d)(2)(ii) of this section, as well as instructions specified in the plan, including instructions—

(*1*) Which would result in a prohibited transaction described in ERISA section 406 or section 4975 of the Internal Revenue Code, and

(*2*) Which would generate income that would be taxable to the plan;

(C) *Imposes reasonable restrictions on frequency of investment instructions.* A plan may impose reasonable restrictions on the frequency with which participants and beneficiaries may give investment instructions. In no event, however, is such a restriction reasonable unless, with respect to each investment alternative made available by the plan, it permits participants and beneficiaries to give investment instructions with a frequency which is appropriate in light of the market volatility to which the investment alternative may reasonably be expected to be subject, provided that—

(*1*) At least three of the investment alternatives made available pursuant to the requirements of paragraph (b)(3)(i)(B) of this section, which constitute a broad range of investment alternatives, Permit participants and beneficiaries to give investment instructions no less frequently than once within any three month period; and

(*2*)(*i*) At least one of the investment alternatives meeting the requirements

of paragraph (b)(2)(ii)(C)(*1*) of this section permits participants and beneficiaries to give investment instructions with regard to transfers into the investment alternative as frequently as participants and beneficiaries are permitted to give investment instructions with respect to any investment alternative made available by the plan which permits participants and beneficiaries to give investment instructions more frequently than once within any three month period; or

(*ii*) With respect to each investment alternative which permits participants and beneficiaries to give investment instructions more frequently than once within any three month period, participants and beneficiaries are permitted to direct their investments from such alternative into an income producing, low risk, liquid fund, subfund, or account as frequently as they are permitted to give investment instructions with respect to each such alternative and, with respect to such fund, subfund or account, participants and beneficiaries are permitted to direct investments from the fund, subfund or account to an investment alternative meeting the requirements of paragraph (b)(2)(ii)(C)(*1*) as frequently as they are permitted to give investment instructions with respect to that investment alternative; and

(*3*) With respect to transfers from an investment alternative which is designed to permit a participant or beneficiary to directly or indirectly acquire or sell any employer security (employer security alternative) either:

(*i*) All of the investment alternatives meeting the requirements of paragraph (b)(2)(ii)(C)(*1*) of this section must permit participants and beneficiaries to give investment instructions with regard to transfers into each of the investment alternatives as frequently as participants and beneficiaries are permitted to give investment instructions with respect to the employer security alternative; or

(*ii*) Participants and beneficiaries are permitted to direct their investments from each employer security alternative into an income producing, low risk, liquid fund, subfund, or account as frequently as they are permitted to give investment instructions with respect to such employer security alternative and, with respect to such fund, subfund, or account, participants and beneficiaries are permitted to direct investments from the fund, subfund or account to each investment alternative meeting the requirements of paragraph (b)(2)(ii)(C)(*1*) as frequently as they are permitted to give investment instructions with respect to each such investment alternative.

(iii) Paragraph (c) of this section describes the circumstances under which a participant or beneficiary will be considered to have exercised independent control with respect to a particular transaction.

(3) *Broad range of investment alternatives.* (i) A plan offers a broad range of investment alternatives only if the available investment alternatives are sufficient to provide the participant or beneficiary with a reasonable opportunity to:

(A) Materially affect the potential return on amounts in his individual account with respect to which he is permitted to exercise control and the degree of risk to which such amounts are subject;

(B) Choose from at least three investment alternatives:

(*1*) Each of which is diversified;

(*2*) Each of which has materially different risk and return characteristics;

(*3*) Which in the aggregate enable the participant or beneficiary by choosing among them to achieve a portfolio with aggregate risk and return characteristics at any point within the range normally appropriate for the participant or beneficiary; and

(*4*) Each of which when combined with investments in the other alternatives tends to minimize through diversification the overall risk of a participant's or beneficiary's portfolio;

(C) Diversify the investment of that portion of his individual account with respect to which he is permitted to exercise control so as to minimize the risk of large losses, taking into account the nature of the plan and the size of participants' or beneficiaries' accounts. In determining whether a plan provides the participant or beneficiary with a reasonable opportunity

to diversify his investments, the nature of the investment alternatives offered by the plan and the size of the portion of the individual's account over which he is permitted to exercise control must be considered. Where such portion of the account of any participant or beneficiary is so limited in size that the opportunity to invest in look-through investment vehicles is the only prudent means to assure an opportunity to achieve appropriate diversification, a plan may satisfy the requirements of this paragraph only by offering look-through investment vehicles.

(ii) *Diversification and look-through investment vehicles.* Where look-through investment vehicles are available as investment alternatives to participants and beneficiaries, the underlying investments of the look-through investment vehicles shall be considered in determining whether the plan satisfies the requirements of subparagraphs (b)(3)(i)(B) and (b)(3)(i)(C).

(c) *Exercise of control*—(1) *In general.* (i) Sections 404(c)(1) and 404(c)(2) of the Act and paragraphs (a) and (d) of this section apply only with respect to a transaction where a participant or beneficiary has exercised independent control in fact with respect to the investment of assets in his individual account under an ERISA section 404(c) plan.

(ii) For purposes of sections 404(c)(1) and 404(c)(2) of the Act and paragraphs (a) and (d) of this section, a participant or beneficiary will be deemed to have exercised control with respect to voting, tender or similar rights appurtenant to the participant's or beneficiary's ownership interest in an investment alternative, provided that the participant's or beneficiary's investment in the investment alternative was itself the result of an exercise of control; the participant or beneficiary was provided a reasonable opportunity to give instruction with respect to such incidents of ownership, including the provision of the information described in 29 CFR 2550.404a–5(d)(3); and the participant or beneficiary has not failed to exercise control by reason of the circumstances described in paragraph (c)(2) with respect to such incidents of ownership.

(2) *Independent control.* Whether a participant or beneficiary has exercised independent control in fact with respect to a transaction depends on the facts and circumstances of the particular case. However, a participant's or beneficiary's exercise of control is not independent in fact if:

(i) The participant or beneficiary is subjected to improper influence by a plan fiduciary or the plan sponsor with respect to the transaction;

(ii) A plan fiduciary has concealed material non-public facts regarding the investment from the participant or beneficiary, unless the disclosure of such information by the plan fiduciary to the participant or beneficiary would violate any provision of federal law or any provision of state law which is not preempted by the Act; or

(iii) The participant or beneficiary is legally incompetent and the responsible plan fiduciary accepts the instructions of the participant or beneficiary knowing him to be legally incompetent.

(3) *Transactions involving a fiduciary.* In the case of a sale, exchange or leasing of property (other than a transaction described in paragraph (d)(2)(ii)(E) of this section) between an ERISA section 404(c) plan and a plan fiduciary or an affiliate of such a fiduciary, or a loan to a plan fiduciary or an affiliate of such a fiduciary, the participant or beneficiary will not be deemed to have exercised independent control unless the transaction is fair and reasonable to him. For purposes of this paragraph (c)(3), a transaction will be deemed to be fair and reasonable to a participant or beneficiary if he pays no more than, or receives no less than, adequate consideration (as defined in section 3(18) of the Act) in connection with the transaction.

(4) *No obligation to advise.* A fiduciary has no obligation under part 4 of title I of the Act to provide investment advice to a participant or beneficiary under an ERISA section 404(c) plan.

(d) *Effect of independent exercise of control*—(1) *Participant or beneficiary not a fiduciary.* If a participant or beneficiary of an ERISA section 404(c) plan exercises independent control over assets in his individual account in the manner described in paragraph (c),

then such participant or beneficiary is not a fiduciary of the plan by reason of such exercise of control.

(2) *Limitation on liability of plan fiduciaries.* (i) If a participant or beneficiary of an ERISA section 404(c) plan exercises independent control over assets in his individual account in the manner described in paragraph (c), then no other person who is a fiduciary with respect to such plan shall be liable for any loss, or with respect to any breach of part 4 of title I of the Act, that is the direct and necessary result of that participant's or beneficiary's exercise of control.

(ii) Paragraph (d)(2)(i) does not apply with respect to any instruction, which if implemented—

(A) Would not be in accordance with the documents and instruments governing the plan insofar as such documents and instruments are consistent with the provisions of title I of ERISA;

(B) Would cause a fiduciary to maintain the indicia of ownership of any assets of the plan outside the jurisdiction of the district courts of the United States other than as permitted by section 404(b) of the Act and 29 CFR 2550.404b–1;

(C) Would jeopardize the plan's tax qualified status under the Internal Revenue Code;

(D) Could result in a loss in excess of a participant's or beneficiary's account balance; or

(E) Would result in a direct or indirect:

(*1*) Sale, exchange, or lease of property between a plan sponsor or any affiliate of the sponsor and the plan except for the acquisition or disposition of any interest in a fund, subfund or portfolio managed by a plan sponsor or an affiliate of the sponsor, or the purchase or sale of any qualifying employer security (as defined in section 407(d)(5) of the Act) which meets the conditions of section 408(e) of ERISA and section (d)(2)(ii)(E)(*4*) below;

(*2*) Loan to a plan sponsor or any affiliate of the sponsor;

(*3*) Acquisition or sale of any employer real property (as defined in section 407(d)(2) of the Act); or

(*4*) Acquisition or sale of any employer security except to the extent that:

(*i*) Such securities are qualifying employer securities (as defined in section 407(d)(5) of the Act);

(*ii*) Such securities are stock or an equity interest in a publicly traded partnership (as defined in section 7704(b) of the Internal Revenue Code of 1986), but only if such partnership is an existing partnership as defined in section 10211(c)(2)(A) of the Revenue Act of 1987 (Public Law 100–203);

(*iii*) Such securities are publicly traded on a national exchange or other generally recognized market;

(*iv*) Such securities are traded with sufficient frequency and in sufficient volume to assure that participant and beneficiary directions to buy or sell the security may be acted upon promptly and efficiently;

(*v*) Information provided to shareholders of such securities is provided to participants and beneficiaries with accounts holding such securities;

(*vi*) Voting, tender and similar rights with respect to such securities are passed through to participants and beneficiaries with accounts holding such securities;

(*vii*) Information relating to the purchase, holding, and sale of securities, and the exercise of voting, tender and similar rights with respect to such securities by participants and beneficiaries, is maintained in accordance with procedures which are designed to safeguard the confidentiality of such information, except to the extent necessary to comply with Federal laws or state laws not preempted by the Act;

(*viii*) The plan designates a fiduciary who is responsible for ensuring that: The procedures required under subparagraph (d)(2)(ii)(E)(*4*)(*vii*) are sufficient to safeguard the confidentiality of the information described in that subparagraph, such procedures are being followed, and the independent fiduciary required by subparagraph (d)(2)(ii)(E)(*4*)(*ix*) is appointed; and

(*ix*) An independent fiduciary is appointed to carry out activities relating to any situations which the fiduciary designated by the plan for purposes of subparagraph (d)(2)(ii)(E)(*4*)(*viii*) determines involve a potential for undue employer influence upon participants and beneficiaries with regard to the direct or indirect exercise of shareholder

rights. For purposes of this subparagraph, a fiduciary is not independent if the fiduciary is affiliated with any sponsor of the plan.

(iii) The individual investment decisions of an investment manager who is designated directly by a participant or beneficiary or who manages a look-through investment vehicle in which a participant or beneficiary has invested are not direct and necessary results of the designation of the investment manager or of investment in the look-through investment vehicle. However, this paragraph (d)(2)(iii) shall not be construed to result in liability under section 405 of ERISA with respect to a fiduciary (other than the investment manager) who would otherwise be relieved of liability by reason of section 404(c)(2) of the Act and paragraph (d) of this section.

(iv) Paragraph (d)(2)(i) does not serve to relieve a fiduciary from its duty to prudently select and monitor any service provider or designated investment alternative offered under the plan.

(3) *Prohibited transactions.* The relief provided by section 404(c) of the Act and this section applies only to the provisions of part 4 of title I of the Act. Therefore, nothing in this section relieves a disqualified person from the taxes imposed by sections 4975 (a) and (b) of the Internal Revenue Code with respect to the transactions prohibited by section 4975(c)(1) of the Code.

(e) *Defintions.* For purposes of this section:

(1) *Look-through investment vehicle* means:

(i) An investment company described in section 3(a) of the Investment Company Act of 1940, or a series investment company described in section 18(f) of the 1940 Act or any of the segregated portfolios of such company;

(ii) A common or collective trust fund or a pooled investment fund maintained by a bank or similar institution, a deposit in a bank or similar institution, or a fixed rate investment contract of a bank or similar institution;

(iii) A pooled separate account or a fixed rate investment contract of an insurance company qualified to do business in a State; or

(iv) Any entity whose assets include plan assets by reason of a plan's investment in the entity;

(2) *Adequate consideration* has the meaning given it in section 3(18) of the Act and in any regulations under this title;

(3) An *affiliate* of a person includes the following:

(i) Any person directly or indirectly controlling, controlled by, or under common control with the person;

(ii) Any officer, director, partner, employee, an employee of an affiliated employer, relative (as defined in section 3(15) of ERISA), brother, sister, or spouse of a brother or sister, of the person; and

(iii) Any corporation or partnership of which the person is an officer director or partner.

For purposes of this paragraph (e)(3), the term ''control'' means, with respect to a person other than an individual, the power to exercise a controlling influence over the management or policies of such person.

(4) A *designated investment alternative* is a specific investment identified by a plan fiduciary as an available investment alternative under the plan.

(f) *Examples.* The provisions of this section are illustrated by the following examples. Examples (5) through (11) assume that the participant has exercised independent control with respect to his individual account under an ERISA section 404(c) plan described in paragraph (b) and has not directed a transaction described in paragraph (d)(2)(ii).

(1) Plan A is an individual account plan described in section 3(34) of the Act. The plan states that a plan participant or beneficiary may direct the plan administrator to invest any portion of his individual account in a particular diversified equity fund managed by an entity which is not affiliated with the plan sponsor, or any other asset administratively feasible for the plan to hold. However, the plan provides that the plan administrator will not implement certain listed instructions for which plan fiduciaries would not be relieved of liability under section 404(c) (*see* paragraph (d)(2)(ii) of this section). Plan participants and beneficiaries are permitted to give investment instructions during the first week of each month with respect to the equity fund and at any time with respect to other investments. The plan

administrator of Plan A provides each participant and beneficiary with the information described in paragraph (b)(2)(i)(B) of this section, including the information that must be provided on or before the date on which a participant or beneficiary can first direct his or her investments and at least annually thereafter pursuant to 29 CFR 2550.404a–5, and provides updated information in the event of any change in the information provided. Subsequent to any investment by a participant or beneficiary, the plan administrator forwards to the investing participant or beneficiary any materials provided to the plan relating to the exercise of voting, tender or similar rights attendant to ownership of an interest in such investment (*see* paragraph (b)(2)(i)(B)(*3*) of this section and 29 CFR 2550.404a–5(d)(3)). Upon request, the plan administrator provides each participant or beneficiary with copies of any prospectuses (or similar documents relating to designated investment alternatives that are provided by entities that are not registered under the Securities Act of 1933 or the Investment Company Act of 1940), financial statements and reports, and any other materials relating to the designated investment alternatives available under the plan in accordance with 29 CFR 2550.404a–5(d)(4)(i) through (iv). Also upon request, the plan administrator provides each participant and beneficiary with other information required by 29 CFR 2550.404a–5(d)(4) with respect to the equity fund, which is a designated investment alternative, including a statement of the value of a share or unit of the participant's or beneficiary's interest in the equity fund and the date of the valuation. Plan A meets the requirements of paragraph (b)(2)(i)(B) of this section regarding the provision of investment information.

(2) Plan C is an individual account plan described in section 3(34) of the Act under which participants and beneficiaries may choose among three investment alternatives which otherwise meet the requirements of paragraph (b) of this section. The plan permits investment instruction with respect to each investment alternative only on the first 10 days of each calendar quarter, *i.e.*, January 1–10, April 1–10, July 1–10 and October 1–10. Plan C satisfies the condition of paragraph (b)(2)(ii)(C)(*1*) that instruction be permitted not less frequently than once within any three month period, since there is not any three month period during which control could not be exercised.

(3) Assume the same facts as in paragraph (f)(2), except that investment instruction may only be given on January 1, April 4, July 1 and October 1. Plan C is not an ERISA section 404(c) plan because it does not satisfy the condition of paragraph (b)(2)(ii)(C)(*1*) that instruction be permitted not less frequently than once within any three month period. Under these facts, there is a three month period, e.g., January 2 through April 1, during which control could not be exercised by participants and beneficiaries.

(4) Plan D is an individual account plan described in section 3(34) of the Act under which participants and beneficiaries may choose among three diversified investment alternatives which constitute a broad range of investment alternatives. The plan also permits investment instruction with respect to an employer securities alternative but provides that a participant or beneficiary can invest no more than 25% of his account balance in this alternative. This restriction does not affect the availability of relief under section 404(c) inasmuch as it does not relate to the three diversified investment alternatives and, therefore, does not cause the plan to fail to provide an opportunity to choose from a broad range of investment alternatives.

(5) A participant, P, independently exercises control over assets in his individual account plan by directing a plan fiduciary, F, to invest 100% of his account balance in a single stock. P is not a fiduciary with respect to the plan by reason of his exercise of control and F will not be liable for any losses that necessarily result form P's investment instruction.

(6) Assume the same facts as in paragraph (f)(5), except that P directs F to purchase the stock from B, who is a party in interest with respect to the plan. Neither P nor F has engaged in a transaction prohibited under section 406 of the Act: P because he is not a fiduciary with respect to the plan by reason of his exercise of control and F because he is not liable for any breach of part 4 of title I that is the direct and necessary consequence of P's exercise of control. However, a prohibited transaction under section 4975(c) of the Internal Revenue Code may have occurred, and, in the absence of an exemption, tax liability may be imposed pursuant to sections 495 (a) and (b) of the Code.

(7) Assume the same facts as in paragraph (f)(5), except that P does not specify that the stock be purchased from B, and F chooses to purchase the stock from B. In the absence of an exemption, F has engaged in a prohibited transaction described in 406(a) of ERISA because the decision to purchase the stock from B is not a direct or necessary result of P's exercise of control.

(8) Pursuant to the terms of the plan, plan fiduciary F designates three reputable investment managers whom participants may appoint to manage assets in their individual accounts. Participant P selects M, one of the designated managers, to manage the assets in his account. M prudently manages P's account for 6 months after which he incurs losses in managing the account through his imprudence. M has engaged in a breach of fiduciary duty because M's imprudent management of P's account is not a direct or

necessary result of P's exercise of control (the choice of M as manager). F has no fiduciary liability for M's imprudence because he has no affirmative duty to advise P (see paragraph (c)(4)) and because F is relieved of co-fiduciary liability by reason of section 404(c)(2) (see paragraph (d)(2)(iii)). F does have a duty to monitor M's performance to determine the suitability of continuing M as an investment manager, however, and M's imprudence would be a factor which F must consider in periodically reevaluating its decision to designate M.

(9) Participant P instructs plan fiduciary F to appoint G as his investment manager pursuant to the terms of the plan which provide P total discretion in choosing an investment manager. Through G's imprudence, G incurs losses in managing P's account. G has engaged in a breach of fiduciary duty because G's imprudent management of P's account is not a direct or necessary result of P's exercise of control (the choice of G as manager). Plan fiduciary F has no fiduciary liability for G's imprudence because F has no obligation to advise P (see paragraph (c)(4)) and because F is relieved of co-fiduciary liability for G's actions by reason of section 404(c)(2) (see paragraph (d)(2)(iii)). In addition, F also has no duty to determine the suitability of G as an investment manager because the plan does not designate G as an investment manager.

(10) Participant P directs a plan fiduciary, F, a bank, to invest all of the assets in his individual account in a collective trust fund managed by F that is designed to be invested solely in a diversified portfolio of common stocks. Due to economic conditions, the value of the common stocks in the bank collective trust fund declines while the value of publicly-offered fixed income obligations remains relatively stable. F is not liable for any losses incurred by P solely because his individual account was not diversified to include fixed income obligations. Such losses are the direct result of P's exercise of control; moreover, under paragraph (c)(4) of this section F has no obligation to advise P regarding his investment decisions.

(11) Assume the same facts as in paragraph (f)(10) except that F, in managing the collective trust fund, invests the assets of the fund solely in a few highly speculative stocks. F is liable for losses resulting from its imprudent investment in the speculative stocks and for its failure to diversify the assets of the account. This conduct involves a separate breach of F's fiduciary duty that is not a direct or necessary result of P's exercise of control (see paragraph (d)(2)(iii)).

(g) *Effective date*—(1) *In general.* Except as provided in paragraph (g)(2), this section is effective with respect to transactions occurring on or after the first day of the second plan year beginning on or after October 13, 1992.

(2) This section is effective with respect to transactions occurring under a plan maintained pursuant to one or more collective bargaining agreements between employee representatives and one or more employers ratified before October 13, 1992 after the later of the date determined under paragraph (g)(1) or the date on which the last collective bargaining agreement terminates. For purposes of this paragraph (g)(2), any extension or renegotiation of a collective bargaining agreement which is ratified on or after October 13, 1992 is to be disregarded in determining the date on which the agreement terminates.

(3) Transactions occurring before the date determined under subparagraph (g)(1) or (2) of this section, as applicable, are governed by section 404(c) of the Act without regard to the regulation.

[57 FR 46932, Oct. 13, 1992, as amended at 75 FR 64946, Oct. 20, 2010]

§ 2550.404c–5 Fiduciary relief for investments in qualified default investment alternatives.

(a) *In general.* (1) This section implements the fiduciary relief provided under section 404(c)(5) of the Employee Retirement Income Security Act of 1974, as amended (ERISA or the Act), 29 U.S.C. 1001 *et seq.*, under which a participant or beneficiary in an individual account plan will be treated as exercising control over the assets in his or her account for purposes of ERISA section 404(c)(1) with respect to the amount of contributions and earnings that, in the absence of an investment election by the participant, are invested by the plan in accordance with this regulation. If a participant or beneficiary is treated as exercising control over the assets in his or her account in accordance with ERISA section 404(c)(1) no person who is otherwise a fiduciary shall be liable under part 4 of title I of ERISA for any loss or by reason of any breach which results from such participant's or beneficiary's exercise of control. Except as specifically provided in paragraph (c)(6) of this section, a plan need not meet the requirements for an ERISA section 404(c) plan

under 29 CFR 2550.404c–1 in order for a plan fiduciary to obtain the relief under this section.

(2) The standards set forth in this section apply solely for purposes of determining whether a fiduciary meets the requirements of this regulation. Such standards are not intended to be the exclusive means by which a fiduciary might satisfy his or her responsibilities under the Act with respect to the investment of assets in the individual account of a participant or beneficiary.

(b) *Fiduciary relief.* (1) Except as provided in paragraphs (b)(2), (3), and (4) of this section, a fiduciary of an individual account plan that permits participants or beneficiaries to direct the investment of assets in their accounts and that meets the conditions of paragraph (c) of this section shall not be liable for any loss, or by reason of any breach under part 4 of title I of ERISA, that is the direct and necessary result of (i) investing all or part of a participant's or beneficiary's account in any qualified default investment alternative within the meaning of paragraph (e) of this section, or (ii) investment decisions made by the entity described in paragraph (e)(3) of this section in connection with the management of a qualified default investment alternative.

(2) Nothing in this section shall relieve a fiduciary from his or her duties under part 4 of title I of ERISA to prudently select and monitor any qualified default investment alternative under the plan or from any liability that results from a failure to satisfy these duties, including liability for any resulting losses.

(3) Nothing in this section shall relieve any fiduciary described in paragraph (e)(3)(i) of this section from its fiduciary duties under part 4 of title I of ERISA or from any liability that results from a failure to satisfy these duties, including liability for any resulting losses.

(4) Nothing in this section shall provide relief from the prohibited transaction provisions of section 406 of ERISA, or from any liability that results from a violation of those provisions, including liability for any resulting losses.

(c) *Conditions.* With respect to the investment of assets in the individual account of a participant or beneficiary, a fiduciary shall qualify for the relief described in paragraph (b)(1) of this section if:

(1) Assets are invested in a qualified default investment alternative within the meaning of paragraph (e) of this section;

(2) The participant or beneficiary on whose behalf the investment is made had the opportunity to direct the investment of the assets in his or her account but did not direct the investment of the assets;

(3) The participant or beneficiary on whose behalf an investment in a qualified default investment alternative may be made is furnished a notice that meets the requirements of paragraph (d) of this section:

(i) (A) At least 30 days in advance of the date of plan eligibility, or at least 30 days in advance of the date of any first investment in a qualified default investment alternative on behalf of a participant or beneficiary described in paragraph (c)(2) of this section; or

(B) On or before the date of plan eligibility provided the participant has the opportunity to make a permissible withdrawal (as determined under section 414(w) of the Internal Revenue Code of 1986, as amended (Code)); and

(ii) Within a reasonable period of time of at least 30 days in advance of each subsequent plan year;

(4) A fiduciary provides to a participant or beneficiary the material set forth in 29 CFR 2550.404c-1(b)(2)(i)(B)(1)(viii) and (ix) and 29 CFR 404c-1(b)(2)(i)(B)(2) relating to a participant's or beneficiary's investment in a qualified default investment alternative;

(5)(i) Any participant or beneficiary on whose behalf assets are invested in a qualified default investment alternative may transfer, in whole or in part, such assets to any other investment alternative available under the plan with a frequency consistent with that afforded to a participant or beneficiary who elected to invest in the qualified default investment alternative, but not less frequently than once within any three month period;

(ii)(A) Except as provided in paragraph (c)(5)(ii)(B) of this section, any transfer described in paragraph (c)(5)(i), or any permissible withdrawal as determined under section 414(w)(2) of the Code, by a participant or beneficiary of assets invested in a qualified default investment alternative, in whole or in part, resulting from the participant's or beneficiary's election to make such a transfer or withdrawal during the 90-day period beginning on the date of the participant's first elective contribution as determined under section 414(w)(2)(B) of the Code, or other first investment in a qualified default investment alternative on behalf of a participant or beneficiary described in paragraph (c)(2) of this section, shall not be subject to any restrictions, fees or expenses (including surrender charges, liquidation or exchange fees, redemption fees and similar expenses charged in connection with the liquidation of, or transfer from, the investment);

(B) Paragraph (c)(5)(ii)(A) of this section shall not apply to fees and expenses that are charged on an ongoing basis for the operation of the investment itself (such as investment management fees, distribution and/or service fees, ''12b–1'' fees, or legal, accounting, transfer agent and similar administrative expenses), and are not imposed, or do not vary, based on a participant's or beneficiary's decision to withdraw, sell or transfer assets out of the qualified default investment alternative; and

(iii) Following the end of the 90-day period described in paragraph (c)(5)(ii)(A) of this section, any transfer or permissible withdrawal described in this paragraph (c)(5) of this section shall not be subject to any restrictions, fees or expenses not otherwise applicable to a participant or beneficiary who elected to invest in that qualified default investment alternative; and

(6) The plan offers a ''broad range of investment alternatives'' within the meaning of 29 CFR 2550.404c–1(b)(3).

(d) *Notice*. The notice required by paragraph (c)(3) of this section shall be written in a manner calculated to be understood by the average plan participant and shall contain the following:

(1) A description of the circumstances under which assets in the individual account of a participant or beneficiary may be invested on behalf of the participant or beneficiary in a qualified default investment alternative; and, if applicable, an explanation of the circumstances under which elective contributions will be made on behalf of a participant, the percentage of such contributions, and the right of the participant to elect not to have such contributions made on the participant's behalf (or to elect to have such contributions made at a different percentage);

(2) An explanation of the right of participants and beneficiaries to direct the investment of assets in their individual accounts;

(3) A description of the qualified default investment alternative, including a description of the investment objectives, risk and return characteristics (if applicable), and fees and expenses attendant to the investment alternative;

(4) A description of the right of the participants and beneficiaries on whose behalf assets are invested in a qualified default investment alternative to direct the investment of those assets to any other investment alternative under the plan, including a description of any applicable restrictions, fees or expenses in connection with such transfer; and

(5) An explanation of where the participants and beneficiaries can obtain investment information concerning the other investment alternatives available under the plan.

(e) *Qualified default investment alternative*. For purposes of this section, a qualified default investment alternative means an investment alternative available to participants and beneficiaries that:

(1)(i) Does not hold or permit the acquisition of employer securities, except as provided in paragraph (ii).

(ii) Paragraph (e)(1)(i) of this section shall not apply to: (A) Employer securities held or acquired by an investment company registered under the Investment Company Act of 1940 or a similar pooled investment vehicle regulated and subject to periodic examination by a State or Federal agency and

with respect to which investment in such securities is made in accordance with the stated investment objectives of the investment vehicle and independent of the plan sponsor or an affiliate thereof; or (B) with respect to a qualified default investment alternative described in paragraph (e)(4)(iii) of this section, employer securities acquired as a matching contribution from the employer/plan sponsor, or employer securities acquired prior to management by the investment management service to the extent the investment management service has discretionary authority over the disposition of such employer securities;

(2) Satisfies the requirements of paragraph (c)(5) of this section regarding the ability of a participant or beneficiary to transfer, in whole or in part, his or her investment from the qualified default investment alternative to any other investment alternative available under the plan;

(3) Is:

(i) Managed by: (A) an investment manager, within the meaning of section 3(38) of the Act; (B) a trustee of the plan that meets the requirements of section 3(38)(A), (B) and (C) of the Act; or

(C) the plan sponsor, or a committee comprised primarily of employees of the plan sponsor, which is a named fiduciary within the meaning of section 402(a)(2) of the Act;

(ii) An investment company registered under the Investment Company Act of 1940; or

(iii) An investment product or fund described in paragraph (e)(4)(iv) or (v) of this section; and

(4) Constitutes one of the following:

(i) An investment fund product or model portfolio that applies generally accepted investment theories, is diversified so as to minimize the risk of large losses and that is designed to provide varying degrees of long-term appreciation and capital preservation through a mix of equity and fixed income exposures based on the participant's age, target retirement date (such as normal retirement age under the plan) or life expectancy. Such products and portfolios change their asset allocations and associated risk levels over time with the objective of becoming more conservative (*i.e.*, decreasing risk of losses) with increasing age. For purposes of this paragraph (e)(4)(i), asset allocation decisions for such products and portfolios are not required to take into account risk tolerances, investments or other preferences of an individual participant. An example of such a fund or portfolio may be a ''life-cycle'' or ''targeted-retirement-date'' fund or account.

(ii) An investment fund product or model portfolio that applies generally accepted investment theories, is diversified so as to minimize the risk of large losses and that is designed to provide long-term appreciation and capital preservation through a mix of equity and fixed income exposures consistent with a target level of risk appropriate for participants of the plan as a whole. For purposes of this paragraph (e)(4)(ii), asset allocation decisions for such products and portfolios are not required to take into account the age, risk tolerances, investments or other preferences of an individual participant. An example of such a fund or portfolio may be a ''balanced'' fund.

(iii) An investment management service with respect to which a fiduciary, within the meaning of paragraph (e)(3)(i) of this section, applying generally accepted investment theories, allocates the assets of a participant's individual account to achieve varying degrees of long-term appreciation and capital preservation through a mix of equity and fixed income exposures, offered through investment alternatives available under the plan, based on the participant's age, target retirement date (such as normal retirement age under the plan) or life expectancy. Such portfolios are diversified so as to minimize the risk of large losses and change their asset allocations and associated risk levels for an individual account over time with the objective of becoming more conservative (*i.e.*, decreasing risk of losses) with increasing age. For purposes of this paragraph (e)(4)(iii), asset allocation decisions are not required to take into account risk tolerances, investments or other preferences of an individual participant. An example of such a service may be a ''managed account.''

(iv)(A) Subject to paragraph (e)(4)(iv)(B) of this section, an investment product or fund designed to preserve principal and provide a reasonable rate of return, whether or not such return is guaranteed, consistent with liquidity. Such investment product shall for purposes of this paragraph (e)(4)(iv):

(*1*) Seek to maintain, over the term of the investment, the dollar value that is equal to the amount invested in the product; and

(*2*) Be offered by a State or federally regulated financial institution.

(B) An investment product described in this paragraph (e)(4)(iv) shall constitute a qualified default investment alternative for purposes of paragraph (e) of this section for not more than 120 days after the date of the participant's first elective contribution (as determined under section 414(w)(2)(B) of the Code).

(v)(A) Subject to paragraph (e)(4)(v)(B) of this section, an investment product or fund designed to preserve principal; provide a rate of return generally consistent with that earned on intermediate investment grade bonds; and provide liquidity for withdrawals by participants and beneficiaries, including transfers to other investment alternatives. Such investment product or fund shall, for purposes of this paragraph (e)(4)(v), meet the following requirements:

(*1*) There are no fees or surrender charges imposed in connection with withdrawals initiated by a participant or beneficiary; and

(*2*) Such investment product or fund invests primarily in investment products that are backed by State or federally regulated financial institutions.

(B) An investment product or fund described in this paragraph (e)(4)(v) shall constitute a qualified default investment alternative for purposes of paragraph (e) of this section solely for purposes of assets invested in such product or fund before December 24, 2007.

(vi) An investment fund product or model portfolio that otherwise meets the requirements of this section shall not fail to constitute a product or portfolio for purposes of paragraph (e)(4)(i) or (ii) of this section solely because the product or portfolio is offered through variable annuity or similar contracts or through common or collective trust funds or pooled investment funds and without regard to whether such contracts or funds provide annuity purchase rights, investment guarantees, death benefit guarantees or other features ancillary to the investment fund product or model portfolio.

(f) *Preemption of State laws.* (1) Section 514(e)(1) of the Act provides that title I of the Act supersedes any State law that would directly or indirectly prohibit or restrict the inclusion in any plan of an automatic contribution arrangement. For purposes of section 514(e) of the Act and this paragraph (f), an automatic contribution arrangement is an arrangement (or the provisions of a plan) under which:

(i) A participant may elect to have the plan sponsor make payments as contributions under the plan on his or her behalf or receive such payments directly in cash;

(ii) A participant is treated as having elected to have the plan sponsor make such contributions in an amount equal to a uniform percentage of compensation provided under the plan until the participant specifically elects not to have such contributions made (or specifically elects to have such contributions made at a different percentage); and

(iii) Contributions are invested in accordance with paragraphs (a) through (e) of this section.

(2) A State law that would directly or indirectly prohibit or restrict the inclusion in any pension plan of an automatic contribution arrangement is superseded as to any pension plan, regardless of whether such plan includes an automatic contribution arrangement as defined in paragraph (f)(1) of this section.

(3) The administrator of an automatic contribution arrangement within the meaning of paragraph (f)(1) of this section shall be considered to have satisfied the notice requirements of section 514(e)(3) of the Act if notices are furnished in accordance with paragraphs (c)(3) and (d) of this section.

(4) Nothing in this paragraph (f) precludes a pension plan from including an automatic contribution arrangement

that does not meet the conditions of paragraphs (a) through (e) of this section.

[72 FR 60478, Oct. 24, 2007; 73 FR 23350, Apr. 30, 2008]

§ 2550.407a–1 General rule for the acquisition and holding of employer securities and employer real property.

(a) *In general.* Section 407(a)(1) of the Employee Retirement Income Security Act of 1974 (the Act) states that except as otherwise provided in section 407 and section 414 of the Act, a plan may not acquire or hold any employer security which is not a qualifying employer security or any employer real property which is not qualifying employer real property. Section 406(a)(1)(E) prohibits a fiduciary from knowingly causing a plan to engage in a transaction which constitutes a direct or indirect acquisition, on behalf of a plan, of any employer security or employer real property in violation of section 407(a), and section 406(a)(2) prohibits a fiduciary who has authority or discretion to control or manage assets of a plan to permit the plan to hold any employer security or employer real property if he knows or should know that holding such security or real property violates section 407(a).

(b) *Requirements applicable to all plans.* A plan may hold or acquire only employer securities which are qualifying employer securities and employer real property which is qualifying employer real property. A plan may not hold employer securities and employer real property which are not qualifying employer securities and qualifying employer real property, except to the extent that:

(1) The employer security is held by a plan which has made an election under section 407(c)(3) of the Act; or

(2) The employer security is a loan or other extension of credit which satisfies the requirements of section 414(c)(1) of the Act or the employer real property is leased to the employer pursuant to a lease which satisfies the requirements of section 414(c)(2) of the Act.

[42 FR 47201, Sept. 20, 1977; 42 FR 59842, Nov. 22, 1977]

§ 2550.407a–2 Limitation with respect to the acquisition of qualifying employer securities and qualifying employer real property.

(a) *In general.* Section 407(a)(2) of the Employee Retirement Income Security Act of 1974 (the Act) provides that a plan may not acquire any qualifying employer security or qualifying employer real property, if immediately after such acquisition the aggregate fair market value of qualifying employer securities and qualifying employer real property held by the plan exceeds 10 percent of the fair market value of the assets of the plan.

(b) *Acquisition.* For pusposes of section 407(a) of the Act, an acquisition by a plan of qualifying employer securities or qualifying employer real property shall include, but not be limited to, an acquisition by purchase, by the exchange of plan assets, by the exercise of warrants or rights, by the conversion of a security (except any acquisition pursuant to a conversion exempt under section 408(b)(7) of the Act), by default of a loan where the qualifying employer security or qualifying employer real property was security for the loan, or by the contribution of such securities or real property to the plan. However, an acquisition of a security shall not be deemed to have occured if a plan acquires the security as a result of a stock dividend or stock split.

(c) *Fair market value—Indebtedness incurred in connection with the acquisition of a plan asset.* In determining whether a plan is in compliance with the limitation on the acquisition of qualifying employer securities and qualifying employer real property in section 407(a)(2), the limitation on the holding of qualifying employer securities and qualifying employer real property in section 407(a)(3) and § 2550.407a–3 thereunder, and the requirement regarding the disposition of employer securities and employer real property in section 407(a)(4) and § 2550.407a–4 thereunder, the fair market value of total plan assets shall be the fair market value of such assets less the unpaid amount of:

(1) Any indebtedness incurred by the plan in acquiring such assets;

(2) Any indebtedness incurred before the acquisition of such assets if such

indebtedness would not have been incurred but for such acquisition; and

(3) Any indebtedness incurred after the acquisition of such assets if such indebtedness would not have been incurred but for such acquisition and the incurrence of such indebtedness was reasonably foreseeable at the time of such acquisition. However, the fair market value of qualifying employer securities and qualifying employer real property shall be the fair market value of such assets without any reduction for the unpaid amount of any indebtedness incurred by the plan in connection with the acquisition of such employer securities and employer real property.

(d) *Examples.* (1) Plan assets have a fair market value of $100,000. The plan has no liabilities other than liabilities for vested benefits of participants and does not own any employer securities or employer real property. The plan proposes to acquire qualifying employer securities with a fair market value of $10,000 by paying $1,000 in cash and borrowing $9,000. The fair market value of plan assets would be $100,000 ($100,000 of plan assets less $1,000 cash payment plus $10,000 of employer securities less $9,000 indebtedness), the fair market value of the qualifying employer securities would be $10,000, which is 10 percent of the fair market value of plan assets. Accordingly, the acquisition would not contravene section 407(a).

(2) Plan assets have a fair market value of $100,000. The plan has liabilities of $20,000 which were incurred in connection with the acquisition of those assets, and does not own any employer securities or employer real property. The plan proposes to pay cash for qualifying employer securities with a fair market value of $10,000. The fair market value of plan assets would be $80,000 ($100,000 of plan assets less $10,000 cash payment plus $10,000 of employer securities less $20,000 indebtedness), the fair market value of the qualifying employer securities would be $10,000, which is 12.5 percent of the fair market value of plan assets. Accordingly, the acquisition would contravene section 407(a).

[42 FR 47201, Sept. 20, 1977]

§ 2550.407d–5 Definition of the term "qualifying employer security".

(a) *In general.* For purposes of this section and section 407(d)(5) of the Employee Retirement Income Security Act of 1974 (the Act), the term ''qualifying employer security'' means an employer security which is:

(1) Stock; or

(2) A marketable obligation, as defined in paragraph (b) of this section and section 407(e) of the Act.

(b) For purposes of paragraph (a)(2) of this section and section 407(d)(5) of the Act, the term ''marketable obligation'' means a bond, debenture, note, or certificate, or other evidence of indebtedness (hereinafter in this paragraph referred to as ''obligation'') if:

(1) Such obligation is acquired—

(i) On the market, either—

(A) At the price of the obligation prevailing on a national securities exchange which is registered with the Securities and Exchange Commission, or

(B) If the obligation is not traded on such a national securities exchange, at a price not less favorable to the plan than the offering price for the obligation as established by current bid and asked prices quoted by persons independent of the issuer;

(ii) From an underwriter, at a price—

(A) Not in excess of the public offering price for the obligation as set forth in a prospectus or offering circular filed with the Securities and Exchange Commission, and

(B) At which a substantial portion of the same issue is acquired by persons independent of the issuer; or

(iii) Directly from the issuer at a price not less favorable to the plan than the price paid currently for a substantial portion of the same issue by persons independent of the issuer;

(2) Immediately following acquisition of such obligation,

(i) Not more than 25 percent of the aggregate amount of obligations issued in such issue and outstanding at the time of acquisition is held by the plan, and

(ii) At least 50 percent of the aggregate amount referred to in paragraph (A) is held by persons independent of the issuer; and

(3) Immediately following acquisition of the obligation, not more than 25 percent of the assets of the plan is invested in obligations of the employer or an affiliate of the employer.

[42 FR 44388, Sept. 2, 1977]

§ 2550.407d–6 Definition of the term "employee stock ownership plan".

(a) *In general*—(1) *Type of plan*. To be an ''ESOP'' (employee stock ownership plan), a plan described in section 407(d)(6)(A) of the Employee Retirement Income Security Act of 1974 (the Act) must meet the requirements of this section. See section 407(d)(6)(B).

(2) *Designation as ESOP*. To be an ESOP, a plan must be formally designated as such in the plan document.

(3) *Retroactive amendment*. A plan meets the requirements of this section as of the date that it is designated as an ESOP if it is amended retroactively to meet, and in fact does meet, such requirements at any of the following times:

(i) 12 months after the date on which the plan is designated as an ESOP;

(ii) 90 days after a determination letter is issued with respect to the qualification of the plan as an ESOP under this section, but only if the determination is requested by the date in paragraph (a)(3)(i) of this section; or

(iii) A later date approved by the Internal Revenue Service district director.

(4) *Addition to other plan*. An ESOP may form a portion of a plan the balance of which includes a qualified pension, profit-sharing, or stock bonus plan which is not an ESOP. A reference to an ESOP includes an ESOP that forms a portion of another plan.

(5) *Conversion of existing plan to an ESOP*. If an existing pension, profit-sharing, or stock bonus plan is converted into an ESOP, the requirements of section 404 of the Act, relating to fiduciary duties, and section 401(a) of the Internal Revenue Code (the Code), relating to requirements for plans established for the exclusive benefit of employees, apply to such conversion. A conversion may constitute a termination of an existing plan. For definition of a termination, see the regulations under section 411(d)(3) of the Code and section 4041(f) of the Act.

(6) *Certain arrangements barred*—(i) *Buy-sell agreements*. An arrangement involving an ESOP that creates a put option must not provide for the issuance of put options other than as provided under § 2550.408b–3 (j), (k) and (l). Also, an ESOP must not otherwise obligate itself to acquire securities from a particular security holder at an indefinite time determined upon the happening of an event such as the death of the holder.

(b) *Plan designed to invest primarily in qualifying employer securities*. A plan constitutes an ESOP only if the plan specifically states that it is designed to invest primarily in qualifying employer securities. Thus, a stock bonus plan or a money purchase pension plan constituting an ESOP may invest part of its assets in other than qualifying employer securities. Such plan will be treated the same as other stock bonus plans or money purchase pension plans qualified under section 401(a) of the Code with respect to those investments.

(c) *Regulations of the Secretary of the Treasury*. A plan constitutes an ESOP for a plan year only if it meets such other requirements as the Secretary of the Treasury may prescribe by regulation under section 4975(e)(7) of the Code. (See 26 CFR 54.4975–11).

[42 FR 44388, Sept. 2, 1977]

§ 2550.408b–1 General statutory exemption for loans to plan participants and beneficiaries who are parties in interest with respect to the plan.

(a)(1) *In general*. Section 408(b)(1) of the Employee Retirement Income Security Act of 1974 (the Act or ERISA) exempts from the prohibitions of section 406(a), 406(b)(1) and 406(b)(2) loans by a plan to parties in interest who are participants or beneficiaries of the plan, provided that such loans:

(i) Are available to all such participants and beneficiaries on a reasonably equivalent basis;

(ii) Are not made available to highly compensated employees, officers or shareholders in an amount greater than the amount made available to other employees;

(iii) Are made in accordance with specific provisions regarding such loans set forth in the plan;

(iv) Bear a reasonable rate of interest; and

(v) Are adequately secured.

The Internal Revenue Code (the Code) contains parallel provisions to section 408(b)(1) of the Act. Effective, December 31, 1978, section 102 of Reorganization Plan No. 4 of 1978 (43 FR 47713, October 17, 1978) transferred the authority of the Secretary of the Treasury to promulgate regulations of the type published herein to the Secretary of Labor. Therefore, all references herein to section 408(b)(1) of the Act should be read to include reference to the parallel provisions of section 4975(d)(1) of the Code.

Section 1114(b)(15)(B) of the Tax Reform Act of 1986 amended section 408(b)(1)(B) of ERISA by deleting the phrase ''highly compensated employees, officers or shareholders'' and substituting the phrase ''highly compensated employees (within the meaning of section 414(q) of the Internal Revenue Code of 1986).'' Thus, for plans with participant loan programs which are subject to the amended section 408(b)(1)(B), the requirements of this regulation should be read to conform with the amendment.

(2) *Scope*. Section 408(b)(1) of the Act does not contain an exemption from acts described in section 406(b)(3) of the Act (prohibiting fiduciaries from receiving consideration for their own personal account from any party dealing with a plan in connection with a transaction involving plan assets). If a loan from a plan to a participant who is a party in interest with respect to that plan involves an act described in section 406(b)(3), such an act constitutes a separate transaction which is not exempt under section 408(b)(1) of the Act. The provisions of section 408(b)(1) are further limited by section 408(d) of the Act (relating to transactions with owner-employees and related persons).

(3) *Loans*. (i) Section 408(b)(1) of the Act provides relief from the prohibitions of section 406(a), 406(b)(1) and 406(b)(2) for the making of a participant loan. The term ''participant loan'' refers to a loan which is arranged and approved by the fiduciary administering the loan program primarily in the interest of the participant and which otherwise satisfies the criteria set forth in section 408(b)(1) of the Act. The existence of a participant loan or participant loan program will be determined upon consideration of all relevant facts and circumstances. Thus, for example, the mere presence of a loan document appearing to satisfy the requirements of section 408(b)(1) will not be dispositive of whether a participant loan exists where the subsequent administration of the loan indicates that the parties to the loan agreement did not intend the loan to be repaid. Moreover, a loan program containing a precondition designed to benefit a party in interest (other than the participant) is not afforded relief by section 408(b)(1) or this regulation. In this regard, section 408(b)(1) recognizes that a program of participant loans, like other plan investments, must be prudently established and administered for the exclusive purpose of providing benefits to participants and beneficiaries of the plan.

(ii) For the purpose of this regulation, the term ''loan'' will include any renewal or modification of an existing loan agreement, provided that, at the time of each such renewal or modification, the requirements of section 408(b)(1) and this regulation are met.

(4) *Examples*. The following examples illustrate the provisions of § 2550.408b–1(a).

Example 1: T, a trustee of plan P, has exclusive discretion over the management and disposition of plan assets. As a result, T is a fiduciary with respect to P under section 3(21)(A) of the Act and a party in interest with respect to P pursuant to section 3(14)(A) of the Act. T is also a participant in P. Among T's duties as fiduciary is the administration of a participant loan program which meets the requirements of section 408(b)(1) of the Act. Pursuant to strict objective criteria stated under the program, T, who participates in all loan decisions, receives a loan on the same terms as other participants. Although the exercise of T's discretion on behalf of himself may constitute an act of self-dealing described in section 406(b)(1), section 408(b)(1) provides an exemption from section 406(b)(1). As a result, the loan from P to T would be exempt under section 408(b)(1), provided the conditions of that section are otherwise satisfied.

Example 2: P is a plan covering all the employees of E, the employer who established and maintained P. F is a fiduciary with respect to P and an officer of E. The plan documents governing P give F the authority to establish a participant loan program in accordance with section 408(b)(1) of the Act. Pursuant to an arrangement with E, F establishes such a program but limits the use of loan funds to investments in a limited partnership which is established and maintained by E as general partner. Under these facts, the loan program and any loans made pursuant to this program are outside the scope of relief provided by section 408(b)(1) because the loan program is designed to operate for the benefit of E. Under the circumstances described, the diversion of plan assets for E's benefit would also violate sections 403(c)(1) and 404(a) of the Act.

Example 3: Assume the same facts as in Example 2, above, except that F does not limit the use of loan funds. However, E pressures his employees to borrow funds under P's participant loan program and then reloan the loan proceeds to E. F, unaware of E's activities, arranges and approves the loans. If the loans meet all the conditions of section 408(b)(1), such loans will be exempt under that section. However, E's activities would cause the entire transaction to be viewed as an indirect transfer of plan assets between P and E, who is a party in interest with respect to P, but not the participant borrowing from P. By coercing the employees to engage in loan transactions for its benefit, E has engaged in separate transactions that are not exempt under section 408(b)(1). Accordingly, E would be liable for the payment of excise taxes under section 4975 of the Code.

Example 4: Assume the same facts as in Example 2, above, except that, in return for structuring and administering the loan program as indicated, E agrees to pay F an amount equal to 10 percent of the funds loaned under the program. Such a payment would result in a separate transaction not covered by section 408(b)(1). This transaction would be prohibited under section 406(b)(3) since F would be receiving consideration from a party in connection with a transaction involving plan assets.

Example 5: F is a fiduciary with respect to plan P. D is a party in interest with respect to plan P. Section 406(a)(1)(B) of the Act would prohibit F from causing P to lend money to D. However, F enters into an agreement with Z, a plan participant, whereby F will cause P to make a participant loan to Z with the express understanding that Z will subsequently lend the loan proceeds to D. An examination of Z's credit standing indicates that he is not creditworthy and would not, under normal circumstances, receive a loan under the conditions established by the participant loan program. F's decision to approve the participant loan to Z on the basis of Z's prior agreement to lend the money to D violates the exclusive purpose requirements of sections 403(c) and 404(a). In effect, the entire transaction is viewed as an indirect transfer of plan assets between P and D, and not a loan to a participant exempt under section 408(b)(1). Z's lack of credit standing would also cause the transaction to fail under section 408(b)(1)(A) of the Act.

Example 6: F is a fiduciary with respect to Plan P. Z is a plan participant. Z and D are both parties in interest with respect to P. F approves a participant loan to Z in accordance with the conditions established under the participant loan program. Upon receipt of the loan, Z intends to lend the money to D. If F has approved this loan solely upon consideration of those factors which would be considered in a normal commercial setting by an entity in the business of making comparable loans, Z's subsequent use of the loan proceeds will not affect the determination of whether loans under P's program satisfy the conditions of section 408(b)(1).

Example 7: A is the trustee of a small individual account plan. D, the president of the plan sponsor, is also a participant in the plan. Pursuant to a participant loan program meeting the requirements of section 408(b)(1), D applies for a loan to be secured by a parcel of real property. D does not intend to repay the loan; rather, upon eventual default, he will permit the property to be foreclosed upon and transferred to the plan in discharge of his legal obligation to repay the loan. A, aware of D's intention, approves the loan. D fails to make two consecutive quarterly payments of principal and interest under the note evidencing the loan thereby placing the loan in default. The plan then acquires the real property upon foreclosure. Such facts and circumstances indicate that the payment of money from the plan to D was not a participant loan eligible for the relief afforded by section 408(b)(1). In effect, this transaction is a prohibited sale or exchange of property between a plan and a party in interest from the time D receives the money.

Example 8: Plan P establishes a participant loan program. All loans are subject to the condition that the borrowed funds must be used to finance home purchases. Interest rates on the loans are the same as those charged by a local savings and loan association under similar circumstances. A loan by P to a participant to finance a home purchase would be subject to the relief provided by section 408(b)(1) provided that the conditions of 408(b)(1) are met. A participant loan program which is established to make loans for certain stated purposes (e.g., hardship, college tuition, home purchases, etc.) but which is not otherwise designed to benefit parties in interest (other than plan participants) would not, in itself, cause such program to be ineligible for the relief provided

by section 408(b)(1). However, fiduciaries are cautioned that operation of a loan program with limitations may result in loans not being made available to all participants and beneficiaries on a reasonably equivalent basis.

(b) *Reasonably equivalent basis.* (1) Loans will not be considered to have been made available to participants and beneficiaries on a reasonably equivalent basis unless:

(i) Such loans are available to all plan participants and beneficiaries without regard to any individual's race, color, religion, sex, age or national origin;

(ii) In making such loans, consideration has been given only to those factors which would be considered in a normal commercial setting by an entity in the business of making similar types of loans. Such factors may include the applicant's creditworthiness and financial need; and

(iii) An evaluation of all relevant facts and circumstances indicates that, in actual practice, loans are not unreasonably withheld from any applicant.

(2) A participant loan program will not fail the requirement of paragraph (b)(1) of this section or § 2550.408b–1(c) if the program establishes a minimum loan amount of up to $1,000, provided that the loans granted meet the requirements of § 2550.408b–1(f).

(3) *Examples.* The following examples illustrate the provisions of § 2550.408b–1(b)(1):

Example 1: T, a trustee of plan P, has exclusive discretion over the management and disposition of plan assets. T's duties include the administration of a participant loan program which meets the requirements of section 408(b)(1) of the Act. T receives a participant loan at a lower interest rate than the rate made available to other plan participants of similar financial condition or creditworthiness with similar security. The loan by P to T would not be covered by the relief provided by section 408(b)(1) because loans under P's program are not available to all plan participants on a reasonably equivalent basis.

Example 2: Same facts as in example 1, except that T is a member of a committee of trustees responsible for approving participant loans. T pressures the committee to refuse loans to other qualified participants in order to assure that the assets allocated to the participant loan program would be available for a loan by P to T. The loan by P to T would not be covered by the relief provided by section 408(b)(1) since participant loans have not been made available to all participants and beneficiaries on a reasonably equivalent basis.

Example 3: T is the trustee of plan P, which covers the employees of E. A, B and C are employees of E, participants in P, and friends of T. The documents governing P provide that T, in his discretion, may establish a participant loan program meeting certain specified criteria. T institutes such a program and tells A, B and C of his decision. Before T is able to notify P's other participants and beneficiaries of the loan program, A, B, and C file loan applications which, if approved, will use up substantially all of the funds set aside for the loan program. Approval of these applications by T would represent facts and circumstances showing that loans under P's program are not available to all participants and beneficiaries on a reasonably equivalent basis.

(c) *Highly compensated employees.* (1) Loans will not be considered to be made available to highly compensated employees, officers or shareholders in an amount greater than the amount made available to other employees if, upon consideration of all relevant facts and circumstances, the program does not operate to exclude large numbers of plan participants from receiving loans under the program.

(2) A participant loan program will not fail to meet the requirement in paragraph (c)(1), of this section, merely because the plan documents specifically governing such loans set forth either (i) a maximum dollar limitation, or (ii) a maximum percentage of vested accrued benefit which no loan may exceed.

(3) If the second alternative in paragraph (c)(2) of this section (maximum percentage of vested accrued benefit) is chosen, a loan program will not fail to meet this requirement solely because maximum loan amounts will vary directly with the size of the participant's accrued benefit.

(4) *Examples.* The following examples illustrate the provisions of § 2550.408b–1(c).

Example 1: The documents governing plan P provide for the establishment of a participant loan program in which the amount of any loan under the program (when added to the outstanding balances of any other loans under the program to the same participant) does not exceed the lesser of (i) $50,000, or (ii) one-half of the present value of that participant's vested accrued benefit under the plan (but not less than $10,000). P's participant

loan program does not fail to meet the requirement in section 408(b)(1)(B) of the Act, and would be covered by the relief provided by section 408(b)(1) if the other conditions of that section are met.

Example 2: The documents governing plan T provide for the establishment of a participant loan program in which the minimum loan amount would be $25,000. The documents also require that the only security acceptable under the program would be the participant's vested accrued benefit. A, the plan fiduciary administering the loan program, finds that because of the restrictions in the plan documents only 20 percent of the plan participants, all of whom earn in excess of $75,000 a year, would meet the threshold qualifications for a loan. Most of these participants are high-level supervisors or corporate officers. Based on these facts, it appears that loans under the program would be made available to highly compensated employees in an amount greater than the amount made available to other employees. As a result, the loan program would fail to meet the requirement in section 408(b)(1)(B) of the Act and would not be covered by the relief provided in section 408(b)(1).

(d) *Specific plan provisions.* For the purpose of section 408(b)(1) and this regulation, the Department will consider that participant loans granted or renewed at any time prior to the last day of the first plan year beginning on or after January 1, 1989, are made in accordance with specific provisions regarding such loans set forth in the plan if:

(1) The plan provisions regarding such loans contain (at a minimum) an explicit authorization for the plan fiduciary responsible for investing plan assets to establish a participant loan program; and

(2) For participant loans granted or renewed on or after the last day of the first plan year beginning on or after January 1, 1989, the participant loan program which is contained in the plan or in a written document forming part of the plan includes, but need not be limited to, the following:

(i) The identity of the person or positions authorized to administer the participant loan program;

(ii) A procedure for applying for loans;

(iii) The basis on which loans will be approved or denied;

(iv) Limitations (if any) on the types and amount of loans offered;

(v) The procedure under the program for determining a reasonable rate of interest;

(vi) The types of collateral which may secure a participant loan; and

(vii) The events constituting default and the steps that will be taken to preserve plan assets in the event of such default.

Example 1: Plan P authorizes the trustee to establish a participant loan program in accordance with section 408(b)(1) of the Act. Pursuant to this explicit authority, the trustee establishes a written program which contains all of the information required by § 2550.408b–1(d)(2). Loans made pursuant to this authorization and the written loan program will not fail under section 408(b)(1)(C) of the Act merely because the specific provisions regarding such loans are contained in a separate document forming part of the plan. The specific provisions describing the loan program, whether contained in the plan or in a written document forming part of a plan, do affect the rights and obligations of the participants and beneficiaries under the plan and, therefore, must in accordance with section 102(a)(1) of the Act, be disclosed in the plan's summary plan description.

(e) *Reasonable rate of interest.* A loan will be considered to bear a reasonable rate of interest if such loan provides the plan with a return commensurate with the interest rates charged by persons in the business of lending money for loans which would be made under similar circumstances.

Example 1: Plan P makes a participant loan to A at the fixed interest rate of 8% for 5 years. The trustees, prior to making the loan, contacted two local banks to determine under what terms the banks would make a similar loan taking into account A's creditworthiness and the collateral offered. One bank would charge a variable rate of 10% adjusted monthly for a similar loan. The other bank would charge a fixed rate of 12% under similar circumstances. Under these facts, the loan to A would not bear a reasonable rate of interest because the loan did not provide P with a return commensurate with interest rates charged by persons in the business of lending money for loans which would be made under similar circumstances. As a result, the loan would fail to meet the requirements of section 408(b)(1)(D) and would not be covered by the relief provided by section 408(b)(1) of the Act.

Example 2: Pursuant to the provisions of plan P's participant loan program, T, the trustee of P, approves a loan to M, a participant and party in interest with respect to P. At the time of execution, the loan meets all

of the requirements of section 408(b)(1) of the Act. The loan agreement provides that at the end of two years M must pay the remaining balance in full or the parties may renew for an additional two year period. At the end of the initial two year period, the parties agree to renew the loan for an additional two years. At the time of renewal, however, A fails to adjust the interest rate charged on the loan in order to reflect current economic conditions. As a result, the interest rate on the renewal fails to provide a ''reasonable rate of interest'' as required by section 408(b)(1)(D) of the Act. Under such circumstances, the loan would not be exempt under section 408(b)(1) of the Act from the time of renewal.

Example 3: The documents governing plan P's participant loan program provide that loans must bear an interest rate no higher than the maximum interest rate permitted under State X's usury law. Pursuant to the loan program, P makes a participant loan to A, a plan participant, at a time when the interest rates charged by financial institutions in the community (not subject to the usury limit) for similar loans are higher than the usury limit. Under these circumstances, the loan would not bear a reasonable rate of interest because the loan does not provide P with a return commensurate with the interest rates charged by persons in the business of lending money under similar circumstances. In addition, participant loans that are artificially limited to the maximum usury ceiling then prevailing call into question the status of such loans under sections 403(c) and 404(a) where higher yielding comparable investment opportunities are available to the plan.

(f) *Adequate security*. (1) A loan will be considered to be adequately secured if the security posted for such loan is something in addition to and supporting a promise to pay, which is so pledged to the plan that it may be sold, foreclosed upon, or otherwise disposed of upon default of repayment of the loan, the value and liquidity of which security is such that it may reasonably be anticipated that loss of principal or interest will not result from the loan. The adequacy of such security will be determined in light of the type and amount of security which would be required in the case of an otherwise identical transaction in a normal commercial setting between unrelated parties on arm's-length terms. A participant's vested accrued benefit under a plan may be used as security for a participant loan to the extent of the plan's ability to satisfy the participant's outstanding obligation in the event of default.

(2) For purposes of this paragraph,

(i) No more than 50% of the present value of a participant's vested accrued benefit may be considered by a plan as security for the outstanding balance of all plan loans made to that participant;

(ii) A plan will be in compliance with paragraph (f)(2)(i) of this section if, with respect to any participant, it meets the provisions of paragraph (f)(2)(i) of this section immediately after the origination of each participant loan secured in whole or in part by that participant's vested accrued benefit; and

(iii) Any loan secured in whole or in part by a portion of a participant's vested accrued benefit must also meet the requirements of paragraph (f)(1) of this section.

(g) *Effective date*. This section is effective for all participant loans granted or renewed after October 18, 1989, except with respect to paragraph (d)(2) of this section relating to specific plan provisions. Paragraph (d)(2) of this section is effective for participant loans granted or renewed on or after the last day of the first plan year beginning on or after January 1, 1989.

(Approved by the Office of Management and Budget under control number 1210–0076)

[54 FR 30528, July 20, 1989]

§ 2550.408b–2 General statutory exemption for services or office space.

(a) *In general*. Section 408(b)(2) of the Employee Retirement Income Security Act of 1974 (the Act) exempts from the prohibitions of section 406(a) of the Act payment by a plan to a party in interest, including a fiduciary, for office space or any service (or a combination of services) if:

(1) Such office space or service is necessary for the establishment or operation of the plan;

(2) Such office space or service is furnished under a contract or arrangement which is reasonable; and

(3) No more than reasonable compensation is paid for such office space or service.

However, section 408(b)(2) does not contain an exemption from acts described in section 406(b)(1) of the Act (relating

to fiduciaries dealing with the assets of plans in their own interest or for their own account), section 406(b)(2) of the Act (relating to fiduciaries in their individual or in any other capacity acting in any transaction involving the plan on behalf of a party (or representing a party) whose interests are adverse to the interests of the plan or the interests of its participants or beneficiaries) or section 406(b)(3) of the Act (relating to fiduciaries receiving consideration for their own personal account from any party dealing with a plan in connection with a transaction involving the assets of the plan). Such acts are separate transactions not described in section 408(b)(2). See § 2250.408b–2 (e) and (f) for guidance as to whether transactions relating to the furnishing of office space or services by fiduciaries to plans involve acts described in section 406(b)(1) of the Act. Section 408(b)(2) of the Act does not contain an exemption from other provisions of the Act, such as section 404, or other provisions of law which may impose requirements or restrictions relating to the transactions which are exempt under section 408(b)(2). See, for example, section 401 of the Internal Revenue Code of 1954. The provisions of section 408(b)(2) of the Act are further limited by section 408(d) of the Act (relating to transactions with owner-employees and related persons).

(b) *Necessary service.* A service is necessary for the establishment or operation of a plan within the meaning of section 408(b)(2) of the Act and § 2550.408b–2(a)(1) if the service is appropriate and helpful to the plan obtaining the service in carrying out the purposes for which the plan is established or maintained. A person providing such a service to a plan (or a person who is a party in interest solely by reason of a relationship to such a service provider described in section 3(14)(F), (G), (H), or (I) of the Act) may furnish goods which are necessary for the establishment or operation of the plan in the course of, and incidental to, the furnishing of such service to the plan.

(c) *Reasonable contract or arrangement*—(1) *Pension plan disclosure.*

(i) *General.* No contract or arrangement for services between a covered plan and a covered service provider, nor any extension or renewal, is reasonable within the meaning of section 408(b)(2) of the Act and paragraph (a)(2) of this section unless the requirements of this paragraph (c)(1) are satisfied. The requirements of this paragraph (c)(1) are independent of fiduciary obligations under section 404 of the Act.

(ii) *Covered plan.* For purposes of this paragraph (c)(1), a ''covered plan'' is an ''employee pension benefit plan'' or a ''pension plan'' within the meaning of section 3(2)(A) (and not described in section 4(b)) of the Act, except that the term ''covered plan'' shall not include a ''simplified employee pension'' described in section 408(k) of the Internal Revenue Code of 1986 (the Code); a ''simple retirement account'' described in section 408(p) of the Code; an individual retirement account described in section 408(a) of the Code; an individual retirement annuity described in section 408(b) of the Code; or annuity contracts and custodial accounts described in section 403(b) of the Code issued to a current or former employee before January 1, 2009, for which the employer ceased to have any obligation to make contributions (including employee salary reduction contributions), and in fact ceased making contributions to the contract or account for periods before January 1, 2009, and for which all of the rights and benefits under the contract or account are legally enforceable against the insurer or custodian by the individual owner of the contract or account without any involvement by the employer, and for which such individual owner is fully vested in the contract or account.

(iii) *Covered service provider.* For purposes of this paragraph (c)(1), a ''covered service provider'' is a service provider that enters into a contract or arrangement with the covered plan and reasonably expects $1,000 or more in compensation, direct or indirect, to be received in connection with providing one or more of the services described in paragraphs (c)(1)(iii)(A), (B), or (C) of this section pursuant to the contract or arrangement, regardless of whether such services will be performed, or such compensation received, by the covered service provider, an affiliate, or a subcontractor.

(A) *Services as a fiduciary or registered investment adviser.*

(*1*) Services provided directly to the covered plan as a fiduciary (unless otherwise specified, a ''fiduciary'' in this paragraph (c)(1) is a fiduciary within the meaning of section 3(21) of the Act);

(*2*) Services provided as a fiduciary to an investment contract, product, or entity that holds plan assets (as determined pursuant to sections 3(42) and 401 of the Act and 29 CFR 2510.3–101) and in which the covered plan has a direct equity investment (a direct equity investment does not include investments made by the investment contract, product, or entity in which the covered plan invests); or

(*3*) Services provided directly to the covered plan as an investment adviser registered under either the Investment Advisers Act of 1940 or any State law.

(B) *Certain recordkeeping or brokerage services.* Recordkeeping services or brokerage services provided to a covered plan that is an individual account plan, as defined in section 3(34) of the Act, and that permits participants or beneficiaries to direct the investment of their accounts, if one or more designated investment alternatives will be made available (e.g., through a platform or similar mechanism) in connection with such recordkeeping services or brokerage services.

(C) *Other services for indirect compensation.* Accounting, auditing, actuarial, appraisal, banking, consulting (*i.e.,* consulting related to the development or implementation of investment policies or objectives, or the selection or monitoring of service providers or plan investments), custodial, insurance, investment advisory (for plan or participants), legal, recordkeeping, securities or other investment brokerage, third party administration, or valuation services provided to the covered plan, for which the covered service provider, an affiliate, or a subcontractor reasonably expects to receive indirect compensation (as defined in paragraph (c)(1)(viii)(B)(*2*) of this section or compensation described in paragraph (c)(1)(iv)(C)(*3*) of this section).

(D) *Limitations.* Notwithstanding paragraphs (c)(1)(iii)(A), (B), or (C) of this section, no person or entity is a ''covered service provider'' solely by providing services—

(*1*) As an affiliate or a subcontractor that is performing one or more of the services described in paragraphs (c)(1)(iii)(A), (B), or (C) of this section under the contract or arrangement with the covered plan; or

(*2*) To an investment contract, product, or entity in which the covered plan invests, regardless of whether or not the investment contract, product, or entity holds assets of the covered plan, other than services as a fiduciary described in paragraph (c)(1)(iii)(A)(*2*) of this section.

(iv) *Initial disclosure requirements.* The covered service provider must disclose the following information to a responsible plan fiduciary, in writing—

(A) *Services.* A description of the services to be provided to the covered plan pursuant to the contract or arrangement (but not including non-fiduciary services described in paragraph (c)(1)(iii)(D)(*2*) of this section).

(B) *Status.* If applicable, a statement that the covered service provider, an affiliate, or a subcontractor will provide, or reasonably expects to provide, services pursuant to the contract or arrangement directly to the covered plan (or to an investment contract, product or entity that holds plan assets and in which the covered plan has a direct equity investment) as a fiduciary (within the meaning of section 3(21) of the Act); and, if applicable, a statement that the covered service provider, an affiliate, or a subcontractor will provide, or reasonably expects to provide, services pursuant to the contract or arrangement directly to the covered plan as an investment adviser registered under either the Investment Advisers Act of 1940 or any State law.

(C) *Compensation—*(*1*) *Direct compensation.* A description of all direct compensation (as defined in paragraph (c)(1)(viii)(B)(*1*) of this section), either in the aggregate or by service, that the covered service provider, an affiliate, or a subcontractor reasonably expects to receive in connection with the services described pursuant to paragraph (c)(1)(iv)(A) of this section.

(*2*) *Indirect compensation.* A description of all indirect compensation (as defined in paragraph (c)(1)(viii)(B)(*2*) of

this section) that the covered service provider, an affiliate, or a subcontractor reasonably expects to receive in connection with the services described pursuant to paragraph (c)(1)(iv)(A) of this section; including identification of the services for which the indirect compensation will be received, identification of the payer of the indirect compensation, and a description of the arrangement between the payer and the covered service provider, an affiliate, or a subcontractor, as applicable, pursuant to which such indirect compensation is paid.

(*3*) *Compensation paid among related parties.* A description of any compensation that will be paid among the covered service provider, an affiliate, or a subcontractor, in connection with the services described pursuant to paragraph (c)(1)(iv)(A) of this section if it is set on a transaction basis (e.g., commissions, soft dollars, finder's fees or other similar incentive compensation based on business placed or retained) or is charged directly against the covered plan's investment and reflected in the net value of the investment (e.g., Rule 12b–1 fees); including identification of the services for which such compensation will be paid and identification of the payers and recipients of such compensation (including the status of a payer or recipient as an affiliate or a subcontractor). Compensation must be disclosed pursuant to this paragraph (c)(1)(iv)(C)(*3*) regardless of whether such compensation also is disclosed pursuant to paragraph (c)(1)(iv)(C)(*1*) or (*2*), (c)(1)(iv)(E), or (c)(1)(iv)(F) of this section. This paragraph (c)(1)(iv)(C)(*3*) shall not apply to compensation received by an employee from his or her employer on account of work performed by the employee.

(*4*) *Compensation for termination of contract or arrangement.* A description of any compensation that the covered service provider, an affiliate, or a subcontractor reasonably expects to receive in connection with termination of the contract or arrangement, and how any prepaid amounts will be calculated and refunded upon such termination.

(D) *Recordkeeping services.* Without regard to the disclosure of compensation pursuant to paragraph (c)(1)(iv)(C), (c)(1)(iv)(E), or (c)(1)(iv)(F) of this section, if recordkeeping services will be provided to the covered plan—

(*1*) A description of all direct and indirect compensation that the covered service provider, an affiliate, or a subcontractor reasonably expects to receive in connection with such recordkeeping services; and

(*2*) If the covered service provider reasonably expects recordkeeping services to be provided, in whole or in part, without explicit compensation for such recordkeeping services, or when compensation for recordkeeping services is offset or rebated based on other compensation received by the covered service provider, an affiliate, or a subcontractor, a reasonable and good faith estimate of the cost to the covered plan of such recordkeeping services, including an explanation of the methodology and assumptions used to prepare the estimate and a detailed explanation of the recordkeeping services that will be provided to the covered plan. The estimate shall take into account, as applicable, the rates that the covered service provider, an affiliate, or a subcontractor would charge to, or be paid by, third parties, or the prevailing market rates charged, for similar recordkeeping services for a similar plan with a similar number of covered participants and beneficiaries.

(E) *Investment disclosure—fiduciary services.* In the case of a covered service provider described in paragraph (c)(1)(iii)(A)(*2*) of this section, the following additional information with respect to each investment contract, product, or entity that holds plan assets and in which the covered plan has a direct equity investment, and for which fiduciary services will be provided pursuant to the contract or arrangement with the covered plan, unless such information is disclosed to the responsible plan fiduciary by a covered service provider providing recordkeeping services or brokerage services as described in paragraph (c)(1)(iii)(B) of this section—

(*1*) A description of any compensation that will be charged directly against an investment, such as commissions, sales loads, sales charges, deferred sales charges, redemption fees, surrender charges, exchange fees, account fees,

and purchase fees; and that is not included in the annual operating expenses of the investment contract, product, or entity;

(*2*) A description of the annual operating expenses (e.g., expense ratio) if the return is not fixed and any ongoing expenses in addition to annual operating expenses (e.g., wrap fees, mortality and expense fees), or, for an investment contract, product, or entity that is a designated investment alternative, the total annual operating expenses expressed as a percentage and calculated in accordance with 29 CFR 2550.404a–5(h)(5); and

(*3*) For an investment contract, product, or entity that is a designated investment alternative, any other information or data about the designated investment alternative that is within the control of, or reasonably available to, the covered service provider and that is required for the covered plan administrator to comply with the disclosure obligations described in 29 CFR 2550.404a–5(d)(1).

(F) *Investment disclosure—recordkeeping and brokerage services.*

(*1*) In the case of a covered service provider described in paragraph (c)(1)(iii)(B) of this section, the additional information described in paragraph (c)(1)(iv)(E)(*1*) through (*3*) of this section with respect to each designated investment alternative for which recordkeeping services or brokerage services as described in paragraph (c)(1)(iii)(B) of this section will be provided pursuant to the contract or arrangement with the covered plan.

(*2*) A covered service provider may comply with this paragraph (c)(1)(iv)(F) by providing current disclosure materials of the issuer of the designated investment alternative, or information replicated from such materials, that include the information described in such paragraph, provided that:

(*i*) The issuer is not an affiliate;

(*ii*) The issuer is a registered investment company, an insurance company qualified to do business in any State, an issuer of a publicly traded security, or a financial institution supervised by a State or federal agency; and

(*iii*) The covered service provider acts in good faith and does not know that the materials are incomplete or inaccurate, and furnishes the responsible plan fiduciary with a statement that the covered service provider is making no representations as to the completeness or accuracy of such materials.

(G) *Manner of receipt.* A description of the manner in which the compensation described in paragraph (c)(1)(iv)(C) through (F) of this section, as applicable, will be received, such as whether the covered plan will be billed or the compensation will be deducted directly from the covered plan's account(s) or investments.

(H) *Guide to initial disclosures.* [Reserved]

(v) *Timing of initial disclosure requirements; changes.*

(A) A covered service provider must disclose the information required by paragraph (c)(1)(iv) of this section to the responsible plan fiduciary reasonably in advance of the date the contract or arrangement is entered into, and extended or renewed, except that—

(*1*) When an investment contract, product, or entity is determined not to hold plan assets upon the covered plan's direct equity investment, but subsequently is determined to hold plan assets while the covered plan's investment continues, the information required by paragraph (c)(1)(iv) of this section must be disclosed as soon as practicable, but not later than 30 days from the date on which the covered service provider knows that such investment contract, product, or entity holds plan assets; and

(*2*) The information described in paragraph (c)(1)(iv)(F) of this section relating to any investment alternative that is not designated at the time the contract or arrangement is entered into must be disclosed as soon as practicable, but not later than the date the investment alternative is designated by the covered plan.

(B) (*1*) A covered service provider must disclose a change to the information required by paragraph (c)(1)(iv)(A) through (D), and (G) of this section as soon as practicable, but not later than 60 days from the date on which the covered service provider is informed of such change, unless such disclosure is precluded due to extraordinary circumstances beyond the covered service

provider's control, in which case the information must be disclosed as soon as practicable.

(*2*) A covered service provider must, at least annually, disclose any changes to the information required by paragraph (c)(1)(iv)(E) and (F) of this section.

(vi) *Reporting and disclosure information; timing.*

(A) Upon the written request of the responsible plan fiduciary or covered plan administrator, the covered service provider must furnish any other information relating to the compensation received in connection with the contract or arrangement that is required for the covered plan to comply with the reporting and disclosure requirements of Title I of the Act and the regulations, forms and schedules issued thereunder.

(B) The covered service provider must disclose the information required by paragraph (c)(1)(vi)(A) of this section reasonably in advance of the date upon which such responsible plan fiduciary or covered plan administrator states that it must comply with the applicable reporting or disclosure requirement, unless such disclosure is precluded due to extraordinary circumstances beyond the covered service provider's control, in which case the information must be disclosed as soon as practicable.

(vii) *Disclosure errors.* No contract or arrangement will fail to be reasonable under this paragraph (c)(1) solely because the covered service provider, acting in good faith and with reasonable diligence, makes an error or omission in disclosing the information required pursuant to paragraph (c)(1)(iv) of this section (or a change to such information disclosed pursuant to paragraph (c)(1)(v)(B) of this section) or paragraph (c)(1)(vi) of this section, provided that the covered service provider discloses the correct information to the responsible plan fiduciary as soon as practicable, but not later than 30 days from the date on which the covered service provider knows of such error or omission.

(viii) *Definitions.* For purposes of paragraph (c)(1) of this section:

(A) *Affiliate.* A person's or entity's ''affiliate'' directly or indirectly (through one or more intermediaries) controls, is controlled by, or is under common control with such person or entity; or is an officer, director, or employee of, or partner in, such person or entity. Unless otherwise specified, an ''affiliate'' in this paragraph (c)(1) refers to an affiliate of the covered service provider.

(B) *Compensation.* Compensation is anything of monetary value (for example, money, gifts, awards, and trips), but does not include non-monetary compensation valued at $250 or less, in the aggregate, during the term of the contract or arrangement.

(*1*) ''Direct'' compensation is compensation received directly from the covered plan.

(*2*) ''Indirect'' compensation is compensation received from any source other than the covered plan, the plan sponsor, the covered service provider, or an affiliate. Compensation received from a subcontractor is indirect compensation, unless it is received in connection with services performed under the subcontractor's contract or arrangement described in paragraph (c)(1)(viii)(F) of this section.

(*3*) A description of compensation or cost may be expressed as a monetary amount, formula, percentage of the covered plan's assets, or a per capita charge for each participant or beneficiary or, if the compensation or cost cannot reasonably be expressed in such terms, by any other reasonable method. The description may include a reasonable and good faith estimate if the covered service provider cannot otherwise readily describe compensation or cost and the covered service provider explains the methodology and assumptions used to prepare such estimate. Any description, including any estimate of recordkeeping cost under paragraph (c)(1)(iv)(D), must contain sufficient information to permit evaluation of the reasonableness of the compensation or cost.

(C) *Designated investment alternative.* A ''designated investment alternative'' is any investment alternative designated by the covered plan into which participants and beneficiaries may direct the investment of assets held in,

or contributed to, their individual accounts. The term ''designated investment alternative'' shall not include brokerage windows, self-directed brokerage accounts, or similar plan arrangements that enable participants and beneficiaries to select investments beyond those designated by the covered plan.

(D) *Recordkeeping services.* ''Recordkeeping services'' include services related to plan administration and monitoring of plan and participant and beneficiary transactions (e.g., enrollment, payroll deductions and contributions, offering designated investment alternatives and other covered plan investments, loans, withdrawals and distributions); and the maintenance of covered plan and participant and beneficiary accounts, records, and statements.

(E) *Responsible plan fiduciary.* A ''responsible plan fiduciary'' is a fiduciary with authority to cause the covered plan to enter into, or extend or renew, the contract or arrangement.

(F) *Subcontractor.* A ''subcontractor'' is any person or entity (or an affiliate of such person or entity) that is not an affiliate of the covered service provider and that, pursuant to a contract or arrangement with the covered service provider or an affiliate, reasonably expects to receive $1,000 or more in compensation for performing one or more services described pursuant to paragraph (c)(1)(iii)(A) through (C) of this section provided for by the contract or arrangement with the covered plan.

(ix) *Exemption for responsible plan fiduciary.* Pursuant to section 408(a) of the Act, the restrictions of section 406(a)(1)(C) and (D) of the Act shall not apply to a responsible plan fiduciary, notwithstanding any failure by a covered service provider to disclose information required by paragraph (c)(1)(iv) or (vi) of this section, if the following conditions are met:

(A) The responsible plan fiduciary did not know that the covered service provider failed or would fail to make required disclosures and reasonably believed that the covered service provider disclosed the information required by paragraph (c)(1)(iv) or (vi) of this section;

(B) The responsible plan fiduciary, upon discovering that the covered service provider failed to disclose the required information, requests in writing that the covered service provider furnish such information;

(C) If the covered service provider fails to comply with such written request within 90 days of the request, then the responsible plan fiduciary notifies the Department of Labor of the covered service provider's failure, in accordance with paragraph (c)(1)(ix)(E) of this section;

(D) The notice shall contain the following information—

(*1*) The name of the covered plan;

(*2*) The plan number used for the covered plan's Annual Report;

(*3*) The plan sponsor's name, address, and EIN;

(*4*) The name, address, and telephone number of the responsible plan fiduciary;

(*5*) The name, address, phone number, and, if known, EIN of the covered service provider;

(*6*) A description of the services provided to the covered plan;

(*7*) A description of the information that the covered service provider failed to disclose;

(*8*) The date on which such information was requested in writing from the covered service provider; and

(*9*) A statement as to whether the covered service provider continues to provide services to the plan;

(E) The notice shall be filed with the Department not later than 30 days following the earlier of—

(*1*) The covered service provider's refusal to furnish the information requested by the written request described in paragraph (c)(1)(ix)(B) of this section; or

(*2*) 90 days after the written request referred to in paragraph (c)(1)(ix)(B) of this section is made;

(F) The notice required by paragraph (c)(1)(ix)(C) of this section shall be furnished to the U.S. Department of Labor electronically in accordance with instructions published by the Department; or may be sent to the following address: U.S. Department of Labor, Employee Benefits Security Administration, Office of Enforcement, P.O. Box 75296, Washington, DC 20013; and

(G) If the covered service provider fails to comply with the written request referred to in paragraph (c)(1)(ix)(C) of this section within 90 days of such request, the responsible plan fiduciary shall determine whether to terminate or continue the contract or arrangement consistent with its duty of prudence under section 404 of the Act. If the requested information relates to future services and is not disclosed promptly after the end of the 90-day period, then the responsible plan fiduciary shall terminate the contract or arrangement as expeditiously as possible, consistent with such duty of prudence.

(x) *Preemption of State law*. Nothing in this section shall be construed to supersede any provision of State law that governs disclosures by parties that provide the services described in this section, except to the extent that such law prevents the application of a requirement of this section.

(xi) *Internal Revenue Code*. Section 4975(d)(2) of the Code contains provisions parallel to section 408(b)(2) of the Act. Effective December 31, 1978, section 102 of the Reorganization Plan No. 4 of 1978, 5 U.S.C. App. 214 (2000 ed.), transferred the authority of the Secretary of the Treasury to promulgate regulations of the type published herein to the Secretary of Labor. All references herein to section 408(b)(2) of the Act and the regulations thereunder should be read to include reference to the parallel provisions of section 4975(d)(2) of the Code and regulations thereunder at 26 CFR 54.4975–6.

(xii) *Effective date*. Paragraph (c) of this section shall be effective on July 1, 2012. Paragraph (c)(1) of this section shall apply to contracts or arrangements between covered plans and covered service providers as of the effective date, without regard to whether the contract or arrangement was entered into prior to such date; for contracts or arrangements entered into prior to the effective date, the information required to be disclosed pursuant to paragraph (c)(1)(iv) of this section must be furnished no later than the effective date.

(2) *Welfare plan disclosure*. [Reserved]

(3) *Termination of contract or arrangement*. No contract or arrangement is reasonable within the meaning of section 408(b)(2) of the Act and paragraph (a)(2) of this section if it does not permit termination by the plan without penalty to the plan on reasonably short notice under the circumstances to prevent the plan from becoming locked into an arrangement that has become disadvantageous. A long-term lease which may be terminated prior to its expiration (without penalty to the plan) on reasonably short notice under the circumstances is not generally an unreasonable arrangement merely because of its long term. A provision in a contract or other arrangement which reasonably compensates the service provider or lessor for loss upon early termination of the contract, arrangement, or lease is not a penalty. For example, a minimal fee in a service contract which is charged to allow recoupment of reasonable start-up costs is not a penalty. Similarly, a provision in a lease for a termination fee that covers reasonably foreseeable expenses related to the vacancy and reletting of the office space upon early termination of the lease is not a penalty. Such a provision does not reasonably compensate for loss if it provides for payment in excess of actual loss or if it fails to require mitigation of damages.

(d) *Reasonable compensation*. Section 408(b)(2) of the Act and § 2550.408b–2(a)(3) permit a plan to pay a party in interest reasonable compensation for the provision of office space or services described in section 408(b)(2). Section 2550.408c–2 of these regulations contains provisions relating to what constitutes reasonable compensation for the provision of services.

(e) *Transactions with fiduciaries*—(1) *In general*. If the furnishing of office space or a service involves an act described in section 406(b) of the Act (relating to acts involving conflicts of interest by fiduciaries), such an act constitutes a separate transaction which is not exempt under section 408(b)(2) of the Act. The prohibitions of section 406(b) supplement the other prohibitions of section 406(a) of the Act by imposing on parties in interest who are fiduciaries a duty of undivided loyalty to the plans for which they act. These prohibitions are imposed upon fiduciaries to deter

them from exercising the authority, control, or responsibility which makes such persons fiduciaries when they have interests which may conflict with the interests of the plans for which they act. In such cases, the fiduciaries have interests in the transactions which may affect the exercise of their best judgment as fiduciaries. Thus, a fiduciary may not use the authority, control, or responsibility which makes such person a fiduciary to cause a plan to pay an additional fee to such fiduciary (or to a person in which such fiduciary has an interest which may affect the exercise of such fiduciary's best judgment as a fiduciary) to provide a service. Nor may a fiduciary use such authority, control, or responsibility to cause a plan to enter into a transaction involving plan assets whereby such fiduciary (or a person in which such fiduciary has an interest which may affect the exercise of such fiduciary's best judgment as a fiduciary) will receive consideration from a third party in connection with such transaction. A person in which a fiduciary has an interest which may affect the exercise of such fiduciary's best judgment as a fiduciary includes, for example, a person who is a party in interest by reason of a relationship to such fiduciary described in section 3(14)(E), (F), (G), (H), or (I).

(2) *Transactions not described in section 406(b)(1).* A fiduciary does not engage in an act described in section 406(b)(1) of the Act if the fiduciary does not use any of the authority, control or responsibility which makes such person a fiduciary to cause a plan to pay additional fees for a service furnished by such fiduciary or to pay a fee for a service furnished by a person in which such fiduciary has an interest which may affect the exercise of such fiduciary's best judgment as a fiduciary. This may occur, for example, when one fiduciary is retained on behalf of a plan by a second fiduciary to provide a service for an additional fee. However, because the authority, control or responsibility which makes a person a fiduciary may be exercised ''in effect'' as well as in form, mere approval of the transaction by a second fiduciary does not mean that the first fiduciary has not used any of the authority, control or responsibility which makes such person a fiduciary to cause the plan to pay the first fiduciary an additional fee for a service. See paragraph (f) of this section.

(3) *Services without compensation.* If a fiduciary provides services to a plan without the receipt of compensation or other consideration (other than reimbursement of direct expenses properly and actually incurred in the performance of such services within the meaning of § 2550.408c–2(b)(3)), the provision of such services does not, in and of itself, constitute an act described in section 406(b) of the Act. The allowance of a deduction to an employer under section 162 or 212 of the Code for the expense incurred in furnishing office space or services to a plan established or maintained by such employer does not constitute compensation or other consideration.

(f) *Examples.* The provisions of § 2550.408b–2(e) may be illustrated by the following examples.

Example 1. E, an employer whose employees are covered by plan P, is a fiduciary of P. I is a professional investment adviser in which E has no interest which may affect the exercise of E's best judgment as a fiduciary. E causes P to retain I to provide certain kinds of investment advisory services of a type which causes I to be a fiduciary of P under section 3(21)(A)(ii) of the Act. thereafter, I proposes to perform for additional fees portfolio evaluation services in addition to the services currently provided. The provision of such services is arranged by I and approved on behalf of the plan by E. I has not engaged in an act described in section 406(b)(1) of the Act, because I did not use any of the authority, control or responsibility which makes I a fiduciary (the provision of investment advisory services) to cause the plan to pay I additional fees for the provision of the portfolio evaluation services. E has not engaged in an act which is described in section 406(b)(1). E, as the fiduciary who has the responsibility to be prudent in his selection and retention of I and the other investment advisers of the plan, has an interest in the purchase by the plan of portfolio evaluation services. However, such an interest is not an interest which may affect the exercise of E's best judgment as a fiduciary.

Example 2. D, a trustee of plan P with discretion over the management and disposition of plan assets, relies on the advice of C, a consultant to P, as to the investment of plan assets, thereby making C a fiduciary of the plan. On January 1, 1978, C recommends to D that the plan purchase an insurance policy

from U, an insurance company which is not a party in interest with respect to P. C thoroughly explains the reasons for the recommendation and makes a full disclosure concerning the fact that C will receive a commission from U upon the purchase of the policy of P. D considers the recommendation and approves the purchase of the policy by P. C receives a commission. Under such circumstances, C has engaged in an act described in section 406(b)(1) of the Act (as well as sections 406(b)(2) and (3) of the Act) because C is in fact exercising the authority, control or responsibility which makes C a fiduciary to cause the plan to purchase the policy. However, the transaction is exempt from the prohibited transaction provisions of section 406 of the Act, if the requirements of Prohibited Transaction Exemption 77–9 are met.

Example 3. Assume the same facts as in Example (2) except that the nature of C's relationship with the plan is not such that C is a fiduciary of P. The purchase of the insurance policy does not involve an act described in section 406(b)(1) of the Act (or sections 406(b)(2) or (3) of the Act) because such sections only apply to acts by fiduciaries.

Example 4. E, an employer whose employees are covered by plan P, is a fiduciary with respect to P. A, who is not a party in interest with respect to P, persuades E that the plan needs the services of a professional investment adviser and that A should be hired to provide the investment advice. Accordingly, E causes P to hire A to provide investment advice of the type which makes A a fiduciary under § 2510.3–21(c)(1)(ii)(B). Prior to the expiration of A's first contract with P, A persuades E to cause P to renew A's contract with P to provide the same services for additional fees in view of the increased costs in providing such services. During the period of A's second contract, A provides additional investment advice services for which no additional charge is made. Prior to the expiration of A's second contract, A persuades E to cause P to renew his contract for additional fees in view of the additional services A is providing. A has not engaged in an act described in section 406(b)(1) of the Act, because A has not used any of the authority, control or responsibility which makes A a fiduciary (the provision of investment advice) to cause the plan to pay additional fees for A's services.

Example 5. F, a trustee of plan P with discretion over the management and disposition of plan assets, retains C to provide administrative services to P of the type which makes C a fiduciary under section 3(21)(A)(iii). Thereafter, C retains F to provide for additional fees actuarial and various kinds of administrative services in addition to the services F is currently providing to P. Both F and C have engaged in an act described in section 406(b)(1) of the Act. F, regardless of any intent which he may have had at the time he retained C, has engaged in such an act because F has, in effect, exercised the authority, control or responsibility which makes F a fiduciary to cause the plan to pay F additional fees for the services. C, whose continued employment by P depends on F, has also engaged in such an act, because C has an interest in the transaction which might affect the exercise of C's best judgment as a fiduciary. As a result, C has dealt with plan assets in his own interest under section 406(b)(1).

Example 6. F, a fiduciary of plan P with discretionary authority respecting the management of P, retains S, the son of F, to provide for a fee various kinds of administrative services necessary for the operation of the plan. F has engaged in an act described in section 406(b)(1) of the Act because S is a person in whom F has an interest which may affect the exercise of F's best judgment as a fiduciary. Such act is not exempt under section 408(b)(2) of the Act irrespective of whether the provision of the services by S is exempt.

Example 7. T, one of the trustees of plan P, is president of bank B. The bank proposes to provide administrative services to P for a fee. T physically absents himself from all consideration of B's proposal and does not otherwise exercise any of the authority, control or responsibility which makes T a fiduciary to cause the plan to retain B. The other trustees decide to retain B. T has not engaged in an act described in section 406(b)(1) of the Act. Further, the other trustees have not engaged in an act described in section 406(b)(1) merely because T is on the board of trustees of P. This fact alone would not make them have an interest in the transaction which might affect the exercise of their best judgment as fiduciaries.

[42 FR 32390, June 24, 1977, as amended at 75 FR 41635, July 16, 2010; 77 FR 5655, Feb. 3, 2012; 77 FR 41680, July 16, 2012]

§ 2550.408b–3 Loans to Employee Stock Ownership Plans.

(a) *Definitions.* When used in this section, the terms listed below have the following meanings:

(1) *ESOP.* The term *ESOP* refers to an employee stock ownership plan that meets the requirements of section 407(d)(6) of the Employee Retirement Income Security Act of 1974 (the Act) and 29 CFR 2550.407d–6. It is not synonymous with ''stock bonus plan.'' A stock bonus plan must, however, be an ESOP to engage in an exempt loan. The qualification of an ESOP under section 401 (a) of the Internal Revenue Code (the Code) and 26 CFR 54.4975–11 will

not be adversely affected merely because it engages in a non-exempt loan.

(2) *Loan*. The term *loan* refers to a loan made to an ESOP by a party in interest or a loan to an ESOP which is guaranteed by a party in interest. It includes a direct loan of cash, a purchase-money transaction, and an assumption of the obligation of an ESOP. ''Guarantee'' includes an unsecured guarantee and the use of assets of a party in interest as collateral for a loan, even though the use of assets may not be a guarantee under applicable state law. An amendment of a loan in order to qualify as an exempt loan is not a refinancing of the loan or the making of another loan.

(3) *Exempt loan*. The term *exempt loan* refers to a loan that satisfies the provisions of this section. A ''non-exempt loan'' is one that fails to satisfy such provisions.

(4) *Publicly traded*. The term *publicly traded* refers to a security that is listed on a national securities exchange registered under section 6 of the Securities Exchange Act of 1934 (15 U.S.C. 78f) or that is quoted on a system sponsored by a national securities association registered under section 15A(b) of the Securities Exchange Act (15 U.S.C. 78o).

(5) *Qualifying employer security*. The term *qualifying employer security* reters to a security described in 29 CFR 2550.407d–5.

(b) *Statutory exemption*—(1) *Scope*. Section 408(b)(3) of the Act provides an exemption from the prohibited transaction provisions of sections 406(a) and 406(b)(1) of the Act (relating to fiduciaries dealing with the assets of plans in their own interest or for their own account) and 406(b)(2) of the Act (relating to fiduciaries in their individual or in any other capacity acting in any transaction involving the plan on behalf of a party (or representing a party) whose interests are adverse to the interests of the plan or the interests of its participants or beneficiaries). Section 408(b)(3) does not provide an exemption from the prohibitions of section 406(b)(3) of the Act (relating to fiduciaries receiving consideration for their own personal account from any party dealing with a plan in connection with a transaction involving the income or assets of the plan).

(2) *Special scrutiny of transaction*. The exemption under section 408(b)(3) includes within its scope certain transaction in which the potential for self-dealing by fiduciaries exists and in which the interests of fiduciaries may conflict with the interests of participants. To guard against these potential abuses, the Department of Labor will subject these transactions to special scrutiny to ensure that they are primarily for the benefit of participants and their beneficiaries. Although the transactions need not be arranged and approved by an independent fiduciary, fiduciaries are cautioned to scrupulously exercise their discretion in approving them. For example, fiduciaries should be prepared to demonstrate compliance with the net effect test and the arm's-length standard under paragraphs (c)(2) and (3) of this section. Also, fiduciaries should determine that the transaction is truly arranged primarily in the interest of participants and their beneficiaries rather than, for example, in the interest of certain selling shareholders.

(c) *Primary benefit requirements*—(1) *In general*. An exempt loan must be primarily for the benefit of the ESOP participants and their beneficiaries. All the surrounding facts and circumstances, including those described in paragraphs (c)(2) and (3) of this section, will be considered in determining whether such loan satisfies this requirement. However, no loan will satisfy such requirement unless it satisfies the requirements of paragraphs (d), (e) and (f) of this section.

(2) *Net effect on plan assets*. At the time that a loan is made, the interest rate for the loan and the price of securities to be acquired with the loan proceeds should not be such that plan assets might be drained off.

(3) *Arm's-length standard*. The terms of a loan, whether or not between independent parties, must, at the time the loan is made, be at least as favorable to the ESOP as the terms of a comparable loan resulting from arm's-length negotiations between independent parties.

(d) *Use of loan proceeds*. The proceeds of an exempt loan must be used, within a reasonable time after their receipt,

by the borrowing ESOP only for any or all of the following purposes:

(1) To acquire qualifying employer securities.

(2) To repay such loan.

(3) To repay a prior exempt loan. A new loan, the proceeds of which are so used, must satisfy the provisions of this section.

Except as provided in paragraphs (i) and (j) of this section or as otherwise required by applicable law, no security acquired with the proceeds of an exempt loan may be subject to a put, call, or other option, or buy-sell or similar arrangement while held by and when distributed from a plan, whether or not the plan is then ESOP.

(e) *Liability and collateral of ESOP for loan.* An exempt loan must be without recourse against the ESOP. Furthermore, the only assets of the ESOP that may be given as collateral on an exempt loan are qualifying employer securities of two classes: Those acquired with the proceeds of the exempt loan and those that were used as collateral on a prior exempt loan repaid with the proceeds of the current exempt loan. No person entitled to payment under the exempt loan shall have any right to assets of the ESOP other than:

(1) Collateral given for the loan,

(2) Contributions (other than contributions of employer securities) that are made under an ESOP to meet its obligations under the loan, and

(3) Earnings attributable to such collateral and the investment of such contributions.

The payments made with respect to an exempt loan by the ESOP during a plan year must not exceed an amount equal to the sum of such contributions and earnings received during or prior to the year less such payments in prior years. Such contributions and earnings must be accounted for separately in the books of account of the ESOP until the loan is repaid.

(f) *Default.* In the event of default upon an exempt loan, the value of plan assets transferred in satisfaction of the loan must not exceed the amount of default. If the lender is a party in interest, a loan must provide for a transfer of plan assets upon default only upon and to the extent of the failure of the plan to meet the payment schedule of the loan. For purposes of this paragraph, the making of a guarantee does not make a person a lender.

(g) *Reasonable rate of interest.* The interest rate of a loan must not be in excess of a reasonable rate of interest. All relevant factors will be considered in determining a reasonable rate of interest, including the amount and duration of the loan, the security and guarantee (if any) involved, the credit standing of the ESOP and the guarantor (if any), and the interest rate prevailing for comparable loans. When these factors are considered, a variable interest rate may be reasonable.

(h) *Release from encumbrance*—(1) *General rule.* In general, an exempt loan must provide for the release from encumbrance of plan assets used as collateral for the loan under this paragraph. For each plan year during the duration of the loan, the number of securities released must equal the number of encumbered securities held immediately before release for the current plan year multiplied by a fraction. The numerator of the fraction is the amount of principal and interest paid for the year. The denominator of the fraction is the sum of the numerator plus the principal and interest to be paid for all future years. See § 2550.408b–3(h)(4). The number of future years under the loan must be definitely ascertainable and must be determined without taking into account any possible extensions or renewal periods. If the interest rate under the loan is variable, the interest to be paid in future years must be computed by using the interest rate applicable as of the end of the plan year. If collateral includes more than one class of securities, the number of securities of each class to be released for a plan year must be determined by applying the same fraction to each class.

(2) *Special rule.* A loan will not fail to be exempt merely because the number of securities to be released from encumbrance is determined solely with reference to principal payments. However, if release is determined with reference to principal payments only, the following three additional rules apply. The first rule is that the loan must provide for annual payments of principal and interest at a cumulative rate

that is not less rapid at any time than level annual payments of such amounts for 10 years. The second rule is that interest included in any payment is disregarded only to the extent that it would be determined to be interest under standard loan amortization tables. The third rule is that subdivision (2) is not applicable from the time that, by reason of a renewal, extension, or refinancing, the sum of the expired duration of the exempt loan, the renewal period, the extension period, and the duration of a new exempt loan exceeds 10 years.

(3) *Caution against plan disqualification*. Under an exempt loan, the number of securities released from encumbrance may vary from year to year. The release of securities depends upon certain employer contributions and earnings under the ESOP. Under 26 CFR 54.4975–11(d)(2) actual allocations to participants' accounts are based upon assets withdrawn from the suspense account. Nevertheless, for purposes of applying the limitations under section 415 of the Code to these allocations, under 26 CFR 54.4975–11(a)(8)(ii) contributions used by the ESOP to pay the loan are treated as annual additions to participants' accounts. Therefore, particular caution must be exercised to avoid exceeding the maximum annual additions under section 415 of the Code. At the same time, release from encumbrance in annually varying numbers may reflect a failure on the part of the employer to make substantial and recurring contributions to the ESOP which will lead to loss of qualification under section 401(a) of the Code. The Internal Revenue Service will observe closely the operation of ESOPs that release encumbered securities in varying annual amounts, particularly those that provide for the deferral of loan payments or for balloon payments. See 26 CFR 54.4975–7(b)(8)(iii).

(4) *Illustration*. The general rule under paragraph (h)(1) of this section operates as illustrated in the following examples:

Example. Corporation X establishes an ESOP that borrows $750,000 from a bank. X guarantees the loan which is for 15 years at 5% interest and is payable in level annual amounts of $72,256.72. Total payments on the loan are $1,083,850.80. The ESOP uses the entire proceeds of the loan to acquire 15,000 shares of X stock which is used as collateral for the loan. The number of securities to be released for the first year is 1,000 shares, *i.e.*, 15,000 shares × $72,256.72/$1,083,850.80 = 15,000 shares × 1/15. The number of securities to be released for the second year is 1,000 shares, *i.e.*, 14,000 shares × $72,256.72/$1,011,594.08 = 14,000 shares × 1/14. If all loan payments are made as originally scheduled, the number of securities released in each succeeding year of the loan will also be 1,000.

(i) *Right of first refusal*. Qualifying employer securities acquired with proceeds of an exempt loan may, but need not, be subject to a right of first refusal. However, any such right must meet the requirements of this paragraph. Securities subject to such right must be stock or an equity security, or a debt security convertible into stock or an equity security. Also, they must not be publicly traded at the time the right may be exercised. The right of first refusal must be in favor of the employer, the ESOP, or both in any order of priority. The selling price and other terms under the right must not be less favorable to the seller than the greater of the value of the security determined under 26 CFR 54.4975–11(d)(5), or the purchase price and other terms offered by a buyer, other than the employer or the ESOP, making a good faith offer to purchase the security. The right of first refusal must lapse no later than 14 days after the security holder gives written notice to the holder of the right that an offer by a third party to purchase the security has been received.

(j) *Put option*. A qualifying employer security acquired with the proceeds of an exempt loan by an ESOP after September 30, 1976, must be subject to a put option if it is not publicly traded when distributed or if it is subject to a trading limitation when distributed. For purposes of this paragraph, a ''trading limitation'' or a security is a restriction under any Federal or State securities law or any regulation thereunder, or an agreement (not prohibited by this section) affecting the security which would make the security not as freely tradeable as one not subject to such restriction. The put option must be exercisable only by a participant, by the participant's donees, or by a person

(including an estate or its distributee) to whom the security passes by reason of a participant's death. (Under this paragraph ''participant'' means a participant and the beneficiaries of the participant under the ESOP.) The put option must permit a participant to put the security to the employer. Under no circumstances may the put option bind the ESOP. However, it may grant the ESOP an option to assume the rights and obligations of the employer at the time that the put option is exercised. If it is known at the time a loan is made that Federal or state law will be violated by the employer's honoring such put option, the put option must permit the security to be put, in a manner consistent with such law, to a third party (e.g., an affiliate of the employer or a shareholder other than the ESOP) that has substantial net worth at the time the loan is made and whose net worth is reasonably expected to remain substantial.

(k) *Duration of put option*—(1) *General rule*. A put option must be exercisable at least during a 15-month period which begins the date the security subject to the put option is distributed by the ESOP.

(2) *Special rule*. In the case of a security that is publicly traded without restriction when distributed but ceases to be so traded within 15 months after distribution, the employer must notify each security holder in writing on or before the tenth day after the date the security ceases to be so traded that for the remainder of the 15-month period the security is subject to a put option. The number of days between the tenth day and the date on which notice is actually given, if later than the tenth day, must be added to the duration of the put option. The notice must inform distributees of the terms of the put options that they are to hold. The terms must satisfy the requirements of paragraphs (j) through (l) of this section.

(l) *Other put option provisions*—(1) *Manner of exercise*. A put option is exercised by the holder notifying the employer in writing that the put option is being exercised.

(2) *Time excluded from duration of put option*. The period during which a put option is exercisable does not include any time when a distributee is unable to exercise it because the party bound by the put option is prohibited from honoring it by applicable Federal or State law.

(3) *Price*. The price at which a put option must be exercisable is the value of the security, determined in accordance with paragraph (d)(5) of 26 CFR 54.4975–11.

(4) *Payment terms*. The provisions for payment under a put option must be reasonable. The deferral of payment is reasonable if adequate security and a reasonable interest rate are provided for any credit extended and if the cumulative payments at any time are no less than the aggregate of reasonable periodic payments as of such time. Periodic payments are reasonable if annual installments, beginning with 30 days after the date the put option is exercised, are substantially equal. Generally, the payment period may not end more than 5 years after the date the put option is exercised. However, it may be extended to a date no later than the earlier of 10 years from the date the put option is exercised or the date the proceeds of the loan used by the ESOP to acquire the security subject to such put option are entirely repaid.

(5) *Payment restrictions*. Payment under a put option may be restricted by the terms of a loan, including one used to acquire a security subject to a put option, made before November 1, 1977. Otherwise, payment under a put option must not be restricted by the provisions of a loan or any other arrangement, including the terms of the employer's articles of incorporation, unless so required by applicable state law.

(m) *Other terms of loan*. An exempt loan must be for a specific term. Such loan may not be payable at the demand of any person, except in the case of default.

(n) *Status of plan as ESOP*. To be exempt, a loan must be made to a plan that is an ESOP at the time of such loan. However, a loan to a plan formally designated as an ESOP at the time of the loan that fails to be an ESOP because it does not comply with section 401(a) of the Code or 26 CFR 54.4975–11 will be exempt as of the time of such loan if the plan is amended

retroactively under section 401(b) of the Code or 26 CFR 54.4975–11(a)(4).

(o) *Special rules for certain loans*—(1) *Loans made before January 1, 1976.* A loan made before January 1, 1976, or made afterwards under a binding agreement in effect on January 1, 1976 (or under renewals permitted by the terms of such an agreement on that date) is exempt for the entire period of such loan if it otherwise satisfies the provisions of this section for such period, even though it does not satisfy the following provisions of this section:

(i) The last sentence of paragraph (d);

(ii) Paragraphs (e), (f), and (h)(1) and (2); and

(iii) Paragraphs (i) through (m), inclusive.

(2) *Loans made after December 31, 1975, but before November 1, 1977.* A loan made after December 31, 1975, but before November 1, 1977, or made afterwards under a binding agreement in effect on November 1, 1977 (or under renewals permitted by the terms of such an agreement on that date) is exempt for the entire period of such loan if it otherwise satisfies the provisions of this section for such period even though it does not satisfy the following provisions of this section:

(i) Paragraph (f);

(ii) The three provisions of paragraph (h)(2); and

(iii) Paragraph (i).

(3) *Release rule.* Notwithstanding paragraphs (o)(1) and (2) of this section, if the proceeds of a loan are used to acquire securities after November 1, 1977, the loan must comply by such date with the provisions of paragraph (h) of this section.

(4) *Default rule.* Notwithstanding paragraphs (o)(1) and (2) of this section, a loan by a party in interest other than a guarantor must satisfy the requirements of paragraph (f) of this section. A loan will satisfy these requirements if it is retroactively amended before November 1, 1977, to satisfy these requirements.

(5) *Put option rule.* With respect to a security distributed before November 1, 1977, the put option provisions of paragraphs (j), (k), and (l) of this section will be deemed satisfied as of the date the security is distributed if by December 31, 1977, the security is subject to a put option satisfying such provisions. For purposes of satisfying such provisions, the security will be deemed distributed on the date the put option is issued. However, the put option provisions need not be satisfied with respect to a security that is not owned on November 1, 1977, by a person in whose hands a put option must be exercisable.

(Approved by the Office of Management and Budget under control number 1210–0046)

[42 FR 44385, Sept. 2, 1977; 42 FR 45907, Sept. 13, 1977, as amended at 49 FR 18295, Apr. 30, 1984]

§ 2550.408b–4 Statutory exemption for investments in deposits of banks or similar financial institutions.

(a) *In general.* Section 408(b)(4) of the Employee Retirement Income Security Act of 1974 (the Act) exempts from the prohibitions of section 406 of the Act the investment of all or a part of a plan's assets in deposits bearing a reasonable rate of interest in a bank or similar financial institution supervised by the United States or a State, even though such bank or similar financial insitution is a fiduciary or other party in interest with respect to the plan, if the conditions of either § 2550.408b–4(b)(1) or § 2550.408b–4(b)(2) are met. Section 408(b)(4) provides an exemption from sections 406(b)(1) of the Act (relating to fiduciaries dealing with the assets of plans in their own interest or for their own account) and 406(b)(2) of the Act (relating to fiduciaries in their individual or in any other capacity acting in any transaction involving the plan on behalf of a party (or representing a party) whose interests are adverse to the interests of the plan or the interests of its participants or beneficiaries), as well as section 406(a)(1), because section 408(b)(4) contemplates a bank or similar financial institution causing a plan for which it acts as a fiduciary to invest plan assets in its own deposits if the requirements of section 408(b)(4) are met. However, it does not provide an exemption from section 406(b)(3) of the Act (relating to fiduciaries receiving consideration for their own personal account from any party dealing with a plan in connection with a transaction involving the assets of the plan). The receipt of such consideration is a separate transaction not

described in the statutory exemption. Section 408(b)(4) does not contain an exemption from other provisions of the Act, such as section 404, or other provisions of law which may impose requirements or restrictions relating to the transactions which are exempt under section 408(b)(4) of the Act. See, for example, section 401 of the Internal Revenue Code of 1954 (Code). The provisions of section 408(b)(4) of the Act are further limited by section 408(d) of the Act (relating to transactions with owner-employees and related persons).

(b)(1) *Plan covering own employees.* Such investment may be made if the plan is one which covers only the employees of the bank or similar financial institution, the employees of any of its affiliates, or the employees of both.

(2) *Other plans.* Such investment may be made if the investment is expressly authorized by a provision of the plan or trust instrument or if the investment is expressly authorized (or made) by a fiduciary of the plan (other than the bank or similar financial institution or any of its affiliates) who has authority to make such investments, or to instruct the trustee or other fiduciary with respect to investments, and who has no interest in the transaction which may affect the exercise of such authorizing fiduciary's best judgment as a fiduciary so as to cause such authorization to consititute an act described in section 406(b) of the Act. Any authorization to make investments contained in a plan or trust instrument will satisfy the requirement of express authorization for investments made prior to November 1, 1977. Effective November 1, 1977, in the case of a bank or similar financial institution that invests plan assets in deposits in itself or its affiliates under an authorization contained in a plan or trust instrument, such authorization must name such bank or similar financial institution and must state that such bank or similar financial institution may make investments in deposits which bear a reasonable rate of interest in itself (or in an affiliate).

(3) *Example.* B, a bank, is the trustee of plan P's assets. The trust instruments give the trustees the right to invest plan assets in its discretion. B invests in the certificates of deposit of bank C, which is a fiduciary of the plan by virtue of performing certain custodial and administrative services. The authorization is sufficient for the plan to make such investment under section 408(b)(4). Further, such authorization would suffice to allow B to make investments in deposits in itself prior to November 1, 1977. However, subsequent to October 31, 1977, B may not invest in deposits in itself, unless the plan or trust instrument specifically authorizes it to invest in deposits of B.

(c) *Definitions.* (1) The term *bank or similar financial institution* includes a bank (as defined in section 581 of the Code), a domestic building and loan association (as defined in section 7701(a)(19) of the Code), and a credit union (as defined in section 101(6) of the Federal Credit Union Act).

(2) A person is an affiliate of a bank or similar financial institution if such person and such bank or similar financial institution would be treated as members of the same controlled group of corporations or as members of two or more trades or businesses under common control within the meaning of section 414 (b) or (c) of the Code and the regulations thereunder.

(3) The term *deposits* includes any account, temporary or otherwise, upon which a reasonable rate of interest is paid, including a certificate of deposit issued by a bank or similar financial institution.

[42 FR 32392, June 24, 1977; 42 FR 36823, July 18, 1977]

§ 2550.408b–6 Statutory exemption for ancillary services by a bank or similar financial institution.

(a) *In general.* Section 408(b)(6) of the Employee Retirement Income Security Act of 1974 (the Act) exempts from the prohibitions of section 406 of the Act the provision of certain ancillary services by a bank or similar financial institution (as defined in § 2550.408b–4(c)(1) supervised by the United States or a State to a plan for which it acts as a fiduciary if the conditions of § 2550.408b–6(b) are met. Such ancillary services include services which do not meet the requirements of section 408(b)(2) of the Act because the provision of such services involves an act described in section 406(b)(1) of the Act

(relating to fiduciaries dealing with the assets of plans in their own interest or for their own account) by the fiduciary bank or similar financial institution or an act described in section 406(b)(2) of the Act (relating to fiduciaries in their individual or in any other capacity acting in any transaction involving the plan on behalf of a party (or representing a party) whose interests are adverse to the interests of the plan or the interests of its participants or beneficiaries). Section 408(b)(6) provides an exemption from sections 406(b)(1) and (2) because section 408(b)(6) contemplates the provision of such ancillary services without the approval of a second fiduciary (as described in § 2550.408b–2(e)(2)) if the conditions of § 2550.408b–6(b) are met. Thus, for example, plan assets held by a fiduciary bank which are reasonably expected to be needed to satisfy current plan expenses may be placed by the bank in a non-interest-bearing checking account in the bank if the conditions of § 2550.408b–6(b) are met, notwithstanding the provisions of section 408(b)(4) of the Act (relating to investments in bank deposits). However, section 408(b)(6) does not provide an exemption for an act described in section 406(b)(3) of the Act (relating to fiduciaries receiving consideration for their own personal account from any party dealing with a plan in connection with a transaction involving the assets of the plan). The receipt of such consideration is a separate transaction not described in section 408(b)(6). Section 408(b)(6) does not contain an exemption from other provisions of the Act, such as section 404, or other provisions of law which may impose requirements or restrictions relating to the transactions which are exempt under section 408(b)(6) of the Act. See, for example, section 401 of the Internal Revenue Code of 1954. The provisions of section 408(b)(6) of the Act are further limited by section 408(d) of the Act (relating to transactions with owner-employees and related persons).

(b) *Conditions*. Such service must be provided—

(1) At not more than reasonable compensation;

(2) Under adequate internal safeguards which assure that the provision of such service is consistent with sound banking and financial practice, as determined by Federal or State supervisory authority; and

(3) Only to the extent that such service is subject to specific guidelines issued by the bank or similar financial institution which meet the requirements of § 2550.408b–6(c).

[42 FR 32392, June 24, 1977; 42 FR 36823, July 18, 1977]

§ 2550.408b–19 Statutory exemption for cross-trading of securities.

(a) *In general*. (1) Section 408(b)(19) of the Employee Retirement Income Security Act of 1974 (the Act) exempts from the prohibitions of section 406(a)(1)(A) and 406(b)(2) of the Act any cross-trade of securities if certain conditions are satisfied. Among other conditions, the exemption requires that the investment manager adopt, and effect cross-trades in accordance with, written cross-trading policies and procedures that are fair and equitable to all accounts participating in the cross-trading program, and that include:

(i) A description of the investment manager's pricing policies and procedures; and

(ii) The investment manager's policies and procedures for allocating cross-trades in an objective manner among accounts participating in the cross-trading program.

(2) Section 4975(d)(22) of the Internal Revenue Code of 1986 (the Code) contains parallel provisions to section 408(b)(19) of the Act. Effective December 31, 1978, section 102 of Reorganization Plan No. 4 of 1978, 5 U.S.C. App. 214 (2000 ed.), transferred the authority of the Secretary of the Treasury to promulgate regulations of the type published herein to the Secretary of Labor. Therefore, all references herein to section 408(b)(19) of the Act should be read to include reference to the parallel provisions of section 4975(d)(22) of the Code.

(3) Section 408(b)(19)(D) of the Act requires that a plan fiduciary for each plan participating in the cross-trades receive in advance of any cross-trades disclosure regarding the conditions under which the cross-trades may take place, including the written policies and procedures described in section

408(b)(19)(H) of the Act. This disclosure must be in a document that is separate from any other agreement or disclosure involving the asset management relationship. For purposes of section 408(b)(19)(D) of the Act, the policies and procedures furnished to the authorizing fiduciary must conform with the requirements of this regulation.

(4) The standards set forth in this section apply solely for purposes of determining whether an investment manager's written policies and procedures satisfy the content requirements of section 408(b)(19)(H) of the Act. Accordingly, such standards do not determine whether the investment manager satisfies the other requirements for relief under section 408(b)(19) of the Act.

(b)(1) *Policies and procedures. In general.* This paragraph specifies the content of the written policies and procedures required to be adopted by an investment manager and disclosed to the plan fiduciary prior to authorizing cross-trading in order for transactions to qualify for relief under section 408(b)(19) of the Act.

(2) *Style and format.* The content of the policies and procedures required by this paragraph must be clear and concise and written in a manner calculated to be understood by the plan fiduciary authorizing cross-trading. Although no specific format is required for the investment manager's written policies and procedures, the information contained in the policies and procedures must be sufficiently detailed to facilitate a periodic review by the compliance officer of the cross-trades and a determination by such compliance officer that the cross-trades comply with the investment manager's written cross-trading policies and procedures.

(3) *Content* (i). An investment manager's policies and procedures must be fair and equitable to all accounts participating in its cross-trading program and reasonably designed to ensure compliance with the requirements of section 408(b)(19)(H) of the Act. Such policies and procedures must include:

(A) A statement of policy which describes the criteria that will be applied by the investment manager in determining that execution of a securities transaction as a cross-trade will be beneficial to both parties to the transaction;

(B) A description of how the investment manager will determine that cross-trades are effected at the independent ''current market price'' of the security (within the meaning of section 270.17a–7(b) of Title 17, Code of Federal Regulations and SEC no-action and interpretative letters thereunder) as required by section 408(b)(19)(B) of the Act, including the identity of sources used to establish such price;

(C) A description of the procedures for ensuring compliance with the $100,000,000 minimum asset size requirement of section 408(b)(19). A plan or master trust will satisfy the minimum asset size requirement as to a transaction if it satisfies the requirement upon its initial participation in the cross-trading program and on an annual basis thereafter;

(D) A statement that any investment manager participating in a cross-trading program will have conflicting loyalties and responsibilities to the parties involved in any cross-trade transaction and a description of how the investment manager will mitigate such conflicts;

(E) A requirement that the investment manager allocate cross-trades among accounts in an objective and equitable manner and a description of the allocation method(s) available to and used by the investment manager for assuring an objective allocation among accounts participating in the cross-trading program. If more than one allocation methodology may be used by the investment manager, a description of what circumstances will dictate the use of a particular methodology;

(F) Identification of the compliance officer responsible for periodically reviewing the investment manager's compliance with section 408(b)(19)(H) of the Act and a statement of the compliance officer's qualifications for this position;

(G) A statement that the cross-trading statutory exemption under section 408(b)(19) of the Act requires satisfaction of several objective conditions in addition to the requirements that the investment manager adopt and effect cross-trades in accordance with written

cross-trading policies and procedures; and

(H) A statement which specifically describes the scope of the annual review conducted by the compliance officer.

(ii) Nothing herein is intended to preclude an investment manager from including such other policies and procedures not required by this regulation as the investment manager may determine appropriate to comply with the requirements of section 408(b)(19).

(c) *Definitions*. For purposes of this section:

(1) The term ''*account*'' includes any single customer or pooled fund or account.

(2) The term ''*compliance officer*'' means an individual designated by the investment manager who is responsible for periodically reviewing the cross-trades made for the plan to ensure compliance with the investment manager's written cross-trading policies and procedures and the requirements of section 408(b)(19)(H) of the Act.

(3) The term ''*plan fiduciary*'' means a person described in section 3(21)(A) of the Act with respect to a plan (other than the investment manager engaging in the cross-trades or an affiliate) who has the authority to authorize a plan's participation in an investment manager's cross-trading program.

(4) The term ''*investment manager*'' means a person described in section 3(38) of the Act.

(5) The term ''*plan*'' means any employee benefit plan as described in section 3(3) of the Act to which Title I of the Act applies or any plan defined in section 4975(e)(1) of the Code.

(6) The term ''*cross-trade*'' means the purchase and sale of a security between a plan and any other account managed by the same investment manager.

[73 FR 58458, Oct. 7, 2008]

§ 2550.408c–2 Compensation for services.

(a) *In general*. Section 408(b)(2) of the Employee Retirement Income Security Act of 1974 (the Act) refers to the payment of reasonable compensation by a plan to a party in interest for services rendered to the plan. Section 408(c)(2) of the Act and §§ 2550.408c–2(b)(1) through 2550.408c–2(b)(4) clarify what constitutes reasonable compensation for such services.

(b)(1) *General rule*. Generally, whether compensation is ''reasonable'' under sections 408 (b)(2) and (c)(2) of the Act depends on the particular facts and circumstances of each case.

(2) *Payments to certain fiduciaries*. Under sections 408(b)(2) and 408(c)(2) of the Act, the term ''reasonable compensation'' does not include any compensation to a fiduciary who is already receiving full-time pay from an employer or association of employers (any of whose employees are participants in the plan) or from an employee organization (any of whose members are participants in the plan), except for the reimbursement of direct expenses properly and actually incurred and not otherwise reimbursed. The restrictions of this paragraph (b)(2) do not apply to a party in interest who is not a fiduciary.

(3) *Certain expenses not direct expenses*. An expense is not a direct expense to the extent it would have been sustained had the service not been provided or if it represents an allocable portion of overhead costs.

(4) *Expense advances*. Under sections 408(b)(2) and 408(c)(2) of the Act, the term ''reasonable compensation,'' as applied to a fiduciary or an employee of a plan, includes an advance to such a fiduciary or employee by the plan to cover direct expenses to be properly and actually incurred by such person in the performance of such person's duties with the plan if:

(i) The amount of such advance is reasonable with respect to the amount of the direct expense which is likely to be properly and actually incurred in the immediate future (such as during the next month); and

(ii) The fiduciary or employee accounts to the plan at the end of the period covered by the advance for the expenses properly and actually incurred.

(5) *Excessive compensation*. Under sections 408(b)(2) and 408(c)(2) of the Act, any compensation which would be considered excessive under 26 CFR 1.162–7 (Income Tax Regulations relating to compensation for personal services which consitutes an ordinary and necessary trade or business expense) will

not be ''reasonable compensation.'' Depending upon the facts and circumstances of the particular situation, compensation which is not excessive under 26 CFR 1.162–7 may, nevertheless, not be ''reasonable compensation'' within the meaning of sections 408(b)(2) and 408 (c)(2) of the Act.

[42 FR 32393, June 24, 1977]

§ 2550.408e Statutory exemption for acquisition or sale of qualifying employer securities and for acquisition, sale, or lease of qualifying employer real property.

(a) *General.* Section 408(e) of the Employee Retirement Income Security Act of 1974 (the Act) exempts from the prohibitions of section 406(a) and 406(b)(1) and (2) of the Act any acquisition or sale by a plan of qualifying employer securities (as defined in section 407(d)(5) of the Act), or any acquisition, sale or lease by a plan of qualifying employer real property (as defined in section 407(d)(4) of the Act) if certain conditions are met. The conditions are that:

(1) The acquisition, sale or lease must be for adequate consideration (which is defined in paragraph (d) of this section);

(2) No commission may be charged directly or indirectly to the plan with respect to the transaction; and

(3) In the case of an acquisition or lease of qualifying employer real property, or an acquisition of qualifying employer securities, by a plan other than an eligible individual account plan (as defined in section 407(d)(3) of the Act), the acquisition or lease must comply with the requirements of section 407(a) of the Act.

(b) *Acquisition.* For purposes of section 408(e) and this section, an acquisition by a plan of qualifying employer securities or qualifying employer real property shall include, but not be limited to, an acquisition by purchase, by the exchange of plan assets, by the exercise of warrants or rights, by the conversion of a security, by default of a loan where the qualifying employer security or qualifying employer real property was security for the loan, or in connection with the contribution of such securities or real property to the plan. However, an acquisition of a security shall not be deemed to have occurred if a plan acquires the security as a result of a stock dividend or stock split.

(c) *Sale.* For purposes of section 408(e) and this section, a sale of qualifying employer real property or qualifying employer securities shall include any disposition for value.

(d) *Adequate consideration.* For purposes of section 408(e) and this section, adequate consideration means:

(1) In the case of a marketable obligation, a price not less favorable to the plan than the price determined under section 407(e)(1) of the Act; and

(2) In all other cases, a price not less favorable to the plan than the price determined under section 3(18) of the Act.

(e) *Commission.* For purposes of section 408(e) and this section, the term ''commission'' includes any fee, commission or similar charge paid in connection with a transaction, except that the term ''commission'' does not include a charge incurred for the purpose of enabling the appropriate plan fiduciaries to evaluate the desirability of entering into a transaction to which this section would apply, such as an appraisal or investment advisory fee.

[45 FR 51197, Aug. 1, 1980]

§ 2550.408g–1 Investment advice—participants and beneficiaries.

(a) *In general.* (1) This section provides relief from the prohibitions of section 406 of the Employee Retirement Income Security Act of 1974, as amended (ERISA or the Act), and section 4975 of the Internal Revenue Code of 1986, as amended (the Code), for certain transactions in connection with the provision of investment advice to participants and beneficiaries. This section, at paragraph (b), implements the statutory exemption set forth at sections 408(b)(14) and 408(g)(1) of ERISA and sections 4975(d)(17) and 4975(f)(8) of the Code. The requirements and conditions set forth in this section apply solely for the relief described in paragraph (b) of this section and, accordingly, no inferences should be drawn with respect to requirements applicable to the provision of investment advice not addressed by this section.

(2) Nothing contained in ERISA section 408(g)(1), Code section 4975(f)(8), or

this regulation imposes an obligation on a plan fiduciary or any other party to offer, provide or otherwise make available any investment advice to a participant or beneficiary.

(3) Nothing contained in ERISA section 408(g)(1), Code section 4975(f)(8), or this regulation invalidates or otherwise affects prior regulations, exemptions, interpretive or other guidance issued by the Department of Labor pertaining to the provision of investment advice and the circumstances under which such advice may or may not constitute a prohibited transaction under section 406 of ERISA or section 4975 of the Code.

(b) *Statutory exemption*—(1) *General.* Sections 408(b)(14) and 408(g)(1) of ERISA provide an exemption from the prohibitions of section 406 of ERISA for transactions described in section 408(b)(14) of ERISA in connection with the provision of investment advice to a participant or a beneficiary if the investment advice is provided by a fiduciary adviser under an ''eligible investment advice arrangement.'' Sections 4975(d)(17) and (f)(8) of the Code contain parallel provisions to ERISA sections 408(b)(14) and (g)(1).

(2) *Eligible investment advice.* For purposes of section 408(g)(1) of ERISA and section 4975(f)(8) of the Code, an ''eligible investment advice arrangement'' means an arrangement that meets either the requirements of paragraph (b)(3) of this section or paragraph (b)(4) of this section, or both.

(3) *Arrangements that use fee leveling.* For purposes of this section, an arrangement is an eligible investment advice arrangement if—

(i)(A) Any investment advice is based on generally accepted investment theories that take into account the historic risks and returns of different asset classes over defined periods of time, although nothing herein shall preclude any investment advice from being based on generally accepted investment theories that take into account additional considerations;

(B) Any investment advice takes into account investment management and other fees and expenses attendant to the recommended investments;

(C) Any investment advice takes into account, to the extent furnished by a plan, participant or beneficiary, information relating to age, time horizons (e.g., life expectancy, retirement age), risk tolerance, current investments in designated investment options, other assets or sources of income, and investment preferences of the participant or beneficiary. A fiduciary adviser shall request such information, but nothing in this paragraph (b)(3)(i)(C) shall require that any investment advice take into account information requested, but not furnished by a participant or beneficiary, nor preclude requesting and taking into account additional information that a plan or participant or beneficiary may provide;

(D) No fiduciary adviser (including any employee, agent, or registered representative) that provides investment advice receives from any party (including an affiliate of the fiduciary adviser), directly or indirectly, any fee or other compensation (including commissions, salary, bonuses, awards, promotions, or other things of value) that varies depending on the basis of a participant's or beneficiary's selection of a particular investment option; and

(ii) The requirements of paragraphs (b)(5), (6), (7), (8) and (9) and paragraph (d) of this section are met.

(4) *Arrangements that use computer models.* For purposes of this section, an arrangement is an eligible investment advice arrangement if the only investment advice provided under the arrangement is advice that is generated by a computer model described in paragraphs (b)(4)(i) and (ii) of this section under an investment advice program and with respect to which the requirements of paragraphs (b)(5), (6), (7), (8) and (9) and paragraph (d) are met.

(i) A computer model shall be designed and operated to—

(A) Apply generally accepted investment theories that take into account the historic risks and returns of different asset classes over defined periods of time, although nothing herein shall preclude a computer model from applying generally accepted investment theories that take into account additional considerations;

(B) Take into account investment management and other fees and expenses attendant to the recommended investments;

(C) Appropriately weight the factors used in estimating future returns of investment options;

(D) Request from a participant or beneficiary and, to the extent furnished, utilize information relating to age, time horizons (e.g., life expectancy, retirement age), risk tolerance, current investments in designated investment options, other assets or sources of income, and investment preferences; provided, however, that nothing herein shall preclude a computer model from requesting and taking into account additional information that a plan or a participant or beneficiary may provide;

(E) Utilize appropriate objective criteria to provide asset allocation portfolios comprised of investment options available under the plan;

(F) Avoid investment recommendations that:

(*1*) Inappropriately favor investment options offered by the fiduciary adviser or a person with a material affiliation or material contractual relationship with the fiduciary adviser over other investment options, if any, available under the plan; or

(*2*) Inappropriately favor investment options that may generate greater income for the fiduciary adviser or a person with a material affiliation or material contractual relationship with the fiduciary adviser; and

(G)(*1*) Except as provided in paragraph (b)(4)(i)(G)(*2*) of this section, take into account all designated investment options, within the meaning of paragraph (c)(1) of this section, available under the plan without giving inappropriate weight to any investment option.

(*2*) A computer model shall not be treated as failing to meet the requirements of this paragraph merely because it does not make recommendations relating to the acquisition, holding or sale of an investment option that:

(*i*) Constitutes an annuity option with respect to which a participant or beneficiary may allocate assets toward the purchase of a stream of retirement income payments guaranteed by an insurance company, provided that, contemporaneous with the provision of investment advice generated by the computer model, the participant or beneficiary is also furnished a general description of such options and how they operate; or

(*ii*) The participant or beneficiary requests to be excluded from consideration in such recommendations.

(ii) Prior to utilization of the computer model, the fiduciary adviser shall obtain a written certification, meeting the requirements of paragraph (b)(4)(iv) of this section, from an eligible investment expert, within the meaning of paragraph (b)(4)(iii) of this section, that the computer model meets the requirements of paragraph (b)(4)(i) of this section. If, following certification, a computer model is modified in a manner that may affect its ability to meet the requirements of paragraph (b)(4)(i), the fiduciary adviser shall, prior to utilization of the modified model, obtain a new certification from an eligible investment expert that the computer model, as modified, meets the requirements of paragraph (b)(4)(i).

(iii) The term ''eligible investment expert'' means a person that, through employees or otherwise, has the appropriate technical training or experience and proficiency to analyze, determine and certify, in a manner consistent with paragraph (b)(4)(iv) of this section, whether a computer model meets the requirements of paragraph (b)(4)(i) of this section; except that the term ''eligible investment expert'' does not include any person that: Has any material affiliation or material contractual relationship with the fiduciary adviser, with a person with a material affiliation or material contractual relationship with the fiduciary adviser, or with any employee, agent, or registered representative of the foregoing; or develops a computer model utilized by the fiduciary adviser to satisfy this paragraph (b)(4).

(iv) A certification by an eligible investment expert shall—

(A) Be in writing;

(B) Contain—

(*1*) An identification of the methodology or methodologies applied in determining whether the computer model meets the requirements of paragraph (b)(4)(i) of this section;

(*2*) An explanation of how the applied methodology or methodologies demonstrated that the computer model met the requirements of paragraph (b)(4)(i) of this section;

(*3*) A description of any limitations that were imposed by any person on the eligible investment expert's selection or application of methodologies for determining whether the computer model meets the requirements of paragraph (b)(4)(i) of this section;

(*4*) A representation that the methodology or methodologies were applied by a person or persons with the educational background, technical training or experience necessary to analyze and determine whether the computer model meets the requirements of paragraph (b)(4)(i); and

(*5*) A statement certifying that the eligible investment expert has determined that the computer model meets the requirements of paragraph (b)(4)(i) of this section; and

(C) Be signed by the eligible investment expert.

(v) The selection of an eligible investment expert as required by this section is a fiduciary act governed by section 404(a)(1) of ERISA.

(5) *Arrangement must be authorized by a plan fiduciary.* (i) Except as provided in paragraph (b)(5)(ii) of this section, the arrangement pursuant to which investment advice is provided to participants and beneficiaries pursuant to this section must be expressly authorized by a plan fiduciary (or, in the case of an Individual Retirement Account (IRA), the IRA beneficiary) other than: The person offering the arrangement; any person providing designated investment options under the plan; or any affiliate of either. Provided, however, that for purposes of the preceding, in the case of an IRA, an IRA beneficiary will not be treated as an affiliate of a person solely by reason of being an employee of such person.

(ii) In the case of an arrangement pursuant to which investment advice is provided to participants and beneficiaries of a plan sponsored by the person offering the arrangement or a plan sponsored by an affiliate of such person, the authorization described in paragraph (b)(5)(i) of this section may be provided by the plan sponsor of such plan, provided that the person or affiliate offers the same arrangement to participants and beneficiaries of unaffiliated plans in the ordinary course of its business.

(iii) For purposes of the authorization described in paragraph (b)(5)(i) of this section, a plan sponsor shall not be treated as a person providing a designated investment option under the plan merely because one of the designated investment options of the plan is an option that permits investment in securities of the plan sponsor or an affiliate.

(6) *Annual audit.* (i) The fiduciary adviser shall, at least annually, engage an independent auditor, who has appropriate technical training or experience and proficiency, and so represents in writing to the fiduciary adviser, to:

(A) Conduct an audit of the investment advice arrangements for compliance with the requirements of this section; and

(B) Within 60 days following completion of the audit, issue a written report to the fiduciary adviser and, except with respect to an arrangement with an IRA, to each fiduciary who authorized the use of the investment advice arrangement, in accordance with paragraph (b)(5) of this section, that—

(*1*) Identifies the fiduciary adviser,

(*2*) Indicates the type of arrangement (*i.e.,* fee leveling, computer models, or both),

(*3*) If the arrangement uses computer models, or both computer models and fee leveling, indicates the date of the most recent computer model certification, and identifies the eligible investment expert that provided the certification, and

(*4*) Sets forth the specific findings of the auditor regarding compliance of the arrangement with the requirements of this section.

(ii) With respect to an arrangement with an IRA, the fiduciary adviser:

(A) Within 30 days following receipt of the report from the auditor, as described in paragraph (b)(6)(i)(B) of this section, shall furnish a copy of the report to the IRA beneficiary or make such report available on its Web site, provided that such beneficiaries are

provided information, with the information required to be disclosed pursuant to paragraph (b)(7) of this section, concerning the purpose of the report, and how and where to locate the report applicable to their account; and

(B) In the event that the report of the auditor identifies noncompliance with the requirements of this section, within 30 days following receipt of the report from the auditor, shall send a copy of the report to the Department of Labor at the following address: Investment Advice Exemption Notification, U.S. Department of Labor, Employee Benefits Security Administration, Room N–1513, 200 Constitution Ave., NW., Washington, DC 20210, or submit a copy electronically to *InvAdvNotification@dol.gov*.

(iii) For purposes of this paragraph (b)(6), an auditor is considered independent if it does not have a material affiliation or material contractual relationship with the person offering the investment advice arrangement to the plan or with any designated investment options under the plan, and does not have any role in the development of the investment advice arrangement, or certification of the computer model utilized under the arrangement.

(iv) For purposes of this paragraph (b)(6), the auditor shall review sufficient relevant information to formulate an opinion as to whether the investment advice arrangements, and the advice provided pursuant thereto, offered by the fiduciary adviser during the audit period were in compliance with this section. Nothing in this paragraph shall preclude an auditor from using information obtained by sampling, as reasonably determined appropriate by the auditor, investment advice arrangements, and the advice pursuant thereto, during the audit period.

(v) The selection of an auditor for purposes of this paragraph (b)(6) is a fiduciary act governed by section 404(a)(1) of ERISA.

(7) *Disclosure to participants.* (i) The fiduciary adviser must provide, without charge, to a participant or a beneficiary before the initial provision of investment advice with regard to any security or other property offered as an investment option, a written notification of:

(A) The role of any party that has a material affiliation or material contractual relationship with the fiduciary adviser in the development of the investment advice program, and in the selection of investment options available under the plan;

(B) The past performance and historical rates of return of the designated investment options available under the plan, to the extent that such information is not otherwise provided;

(C) All fees or other compensation that the fiduciary adviser or any affiliate thereof is to receive (including compensation provided by any third party) in connection with—

(*1*) The provision of the advice;

(*2*) The sale, acquisition, or holding of any security or other property pursuant to such advice; or

(*3*) Any rollover or other distribution of plan assets or the investment of distributed assets in any security or other property pursuant to such advice;

(D) Any material affiliation or material contractual relationship of the fiduciary adviser or affiliates thereof in the security or other property;

(E) The manner, and under what circumstances, any participant or beneficiary information provided under the arrangement will be used or disclosed;

(F) The types of services provided by the fiduciary adviser in connection with the provision of investment advice by the fiduciary adviser;

(G) The adviser is acting as a fiduciary of the plan in connection with the provision of the advice; and

(H) That a recipient of the advice may separately arrange for the provision of advice by another adviser that could have no material affiliation with and receive no fees or other compensation in connection with the security or other property.

(ii)(A) The notification required under paragraph (b)(7)(i) of this section must be written in a clear and conspicuous manner and in a manner calculated to be understood by the average plan participant and must be sufficiently accurate and comprehensive to reasonably apprise such participants and beneficiaries of the information required to be provided in the notification.

(B) The appendix to this section contains a model disclosure form that may be used to provide notification of the information described in paragraph (b)(7)(i)(C) of this section. Use of the model form is not mandatory. However, use of an appropriately completed model disclosure form will be deemed to satisfy the requirements of paragraphs (b)(7)(i) and (ii) of this section with respect to such information.

(iii) The notification required under paragraph (b)(7)(i) of this section may, in accordance with 29 CFR 2520.104b–1, be provided in written or electronic form.

(iv) With respect to the information required to be disclosed pursuant to paragraph (b)(7)(i) of this section, the fiduciary adviser shall, at all times during the provision of advisory services to the participant or beneficiary pursuant to the arrangement—

(A) Maintain accurate, up-to-date information in a form that is consistent with paragraph (b)(7)(ii) of this section,

(B) Provide, without charge, accurate, up-to-date information to the recipient of the advice no less frequently than annually,

(C) Provide, without charge, accurate information to the recipient of the advice upon request of the recipient, and

(D) Provide, without charge, to the recipient of the advice any material change to the information described in paragraph (b)(7)(i) at a time reasonably contemporaneous to the change in information.

(8) *Disclosure to authorizing fiduciary.* The fiduciary adviser shall, in connection with any authorization described in paragraph (b)(5)(i) of this section, provide the authorizing fiduciary with a written notice informing the fiduciary that:

(i) The fiduciary adviser intends to comply with the conditions of the statutory exemption for investment advice under section 408(b)(14) and (g) of the Employee Retirement Income Security Act and this section;

(ii) The fiduciary adviser's arrangement will be audited annually by an independent auditor for compliance with the requirements of the statutory exemption and related regulations; and

(iii) The auditor will furnish the authorizing fiduciary a copy of that auditor's findings within 60 days of its completion of the audit.

(9) *Other conditions.* The requirements of this paragraph are met if—

(i) The fiduciary adviser provides appropriate disclosure, in connection with the sale, acquisition, or holding of the security or other property, in accordance with all applicable securities laws,

(ii) Any sale, acquisition, or holding of a security or other property occurs solely at the direction of the recipient of the advice,

(iii) The compensation received by the fiduciary adviser and affiliates thereof in connection with the sale, acquisition, or holding of the security or other property is reasonable, and

(iv) The terms of the sale, acquisition, or holding of the security or other property are at least as favorable to the plan as an arm's length transaction would be.

(c) *Definitions.* For purposes of this section:

(1) The term ''*designated investment option*'' means any investment option designated by the plan into which participants and beneficiaries may direct the investment of assets held in, or contributed to, their individual accounts. The term ''*designated investment option*'' shall not include ''brokerage windows,'' ''self-directed brokerage accounts,'' or similar plan arrangements that enable participants and beneficiaries to select investments beyond those designated by the plan. The term ''*designated investment option*'' has the same meaning as the term ''*designated investment alternative*'' as defined in 29 CFR 2550.404a–5(h).

(2)(i) The term ''*fiduciary adviser*'' means, with respect to a plan, a person who is a fiduciary of the plan by reason of the provision of investment advice referred to in section 3(21)(A)(ii) of ERISA by the person to the participant or beneficiary of the plan and who is—

(A) Registered as an investment adviser under the Investment Advisers Act of 1940 (15 U.S.C. 80b–1 *et seq.*) or under the laws of the State in which the fiduciary maintains its principal office and place of business,

(B) A bank or similar financial institution referred to in section 408(b)(4) of

ERISA or a savings association (as defined in section 3(b)(1) of the Federal Deposit Insurance Act (12 U.S.C. 1813(b)(1)), but only if the advice is provided through a trust department of the bank or similar financial institution or savings association which is subject to periodic examination and review by Federal or State banking authorities,

(C) An insurance company qualified to do business under the laws of a State,

(D) A person registered as a broker or dealer under the Securities Exchange Act of 1934 (15 U.S.C. 78a *et seq.*),

(E) An affiliate of a person described in paragraphs (c)(2)(i)(A) through (D), or

(F) An employee, agent, or registered representative of a person described in paragraphs (c)(2)(i)(A) through (E) of this section who satisfies the requirements of applicable insurance, banking, and securities laws relating to the provision of advice.

(ii) Except as provided under 29 CFR 2550.408g–2, a fiduciary adviser includes any person who develops the computer model, or markets the computer model or investment advice program, utilized in satisfaction of paragraph (b)(4) of this section.

(3) A ''*registered representative*'' of another entity means a person described in section 3(a)(18) of the Securities Exchange Act of 1934 (15 U.S.C. 78c(a)(18)) (substituting the entity for the broker or dealer referred to in such section) or a person described in section 202(a)(17) of the Investment Advisers Act of 1940 (15 U.S.C. 80b–2(a)(17)) (substituting the entity for the investment adviser referred to in such section).

(4) ''*Individual Retirement Account*'' or ''*IRA*'' means—

(i) An individual retirement account described in section 408(a) of the Code;

(ii) An individual retirement annuity described in section 408(b) of the Code;

(iii) An Archer MSA described in section 220(d) of the Code;

(iv) A health savings account described in section 223(d) of the Code;

(v) A Coverdell education savings account described in section 530 of the Code;

(vi) A trust, plan, account, or annuity which, at any time, has been determined by the Secretary of the Treasury to be described in any of paragraphs (c)(4)(i) through (v) of this section;

(vii) A ''simplified employee pension'' described in section 408(k) of the Code; or

(viii) A ''simple retirement account'' described in section 408(p) of the Code.

(5) An ''*affiliate*'' of another person means—

(i) Any person directly or indirectly owning, controlling, or holding with power to vote, 5 percent or more of the outstanding voting securities of such other person;

(ii) Any person 5 percent or more of whose outstanding voting securities are directly or indirectly owned, controlled, or held with power to vote, by such other person;

(iii) Any person directly or indirectly controlling, controlled by, or under common control with, such other person; and

(iv) Any officer, director, partner, copartner, or employee of such other person.

(6)(i) A person with a ''*material affiliation*'' with another person means—

(A) Any affiliate of the other person;

(B) Any person directly or indirectly owning, controlling, or holding, 5 percent or more of the interests of such other person; and

(C) Any person 5 percent or more of whose interests are directly or indirectly owned, controlled, or held, by such other person.

(ii) For purposes of paragraph (c)(6)(i) of this section, ''*interest*'' means with respect to an entity—

(A) The combined voting power of all classes of stock entitled to vote or the total value of the shares of all classes of stock of the entity if the entity is a corporation;

(B) The capital interest or the profits interest of the entity if the entity is a partnership; or

(C) The beneficial interest of the entity if the entity is a trust or unincorporated enterprise.

(7) Persons have a ''*material contractual relationship*'' if payments made by one person to the other person pursuant to contracts or agreements between the persons exceed 10 percent of the gross revenue, on an annual basis, of such other person.

(8) ''*Control*'' means the power to exercise a controlling influence over the management or policies of a person other than an individual.

(d) *Retention of records.* The fiduciary adviser must maintain, for a period of not less than 6 years after the provision of investment advice under this section any records necessary for determining whether the applicable requirements of this section have been met. A transaction prohibited under section 406 of ERISA shall not be considered to have occurred solely because the records are lost or destroyed prior to the end of the 6-year period due to circumstances beyond the control of the fiduciary adviser.

(e) *Noncompliance.* (1) The relief from the prohibited transaction provisions of section 406 of ERISA and the sanctions resulting from the application of section 4975 of the Code described in paragraph (b) of this section shall not apply to any transaction described in such paragraphs in connection with the provision of investment advice to an individual participant or beneficiary with respect to which the applicable conditions of this section have not been satisfied.

(2) In the case of a pattern or practice of noncompliance with any of the applicable conditions of this section, the relief described in paragraph (b) of this section shall not apply to any transaction in connection with the provision of investment advice provided by the fiduciary adviser during the period over which the pattern or practice extended.

(f) *Effective date and applicability date.* This section shall be effective December 27, 2011. This section shall apply to transactions described in paragraph (b) of this section occurring on or after December 27, 2011.

APPENDIX TO § 2550.408G–1

FIDUCIARY ADVISER DISCLOSURE

This document contains important information about [*enter name of* Fiduciary Adviser] and how it is compensated for the investment advice provided to you. You should carefully consider this information in your evaluation of that advice.

[*enter name of* Fiduciary Adviser] has been selected to provide investment advisory services for the [*enter name of* Plan]. [*enter name of* Fiduciary Adviser] will be providing these services as a fiduciary under the Employee Retirement Income Security Act (ERISA). [*enter name of* Fiduciary Adviser], therefore, must act prudently and with only your interest in mind when providing you recommendations on how to invest your retirement assets.

COMPENSATION OF THE FIDUCIARY ADVISER AND RELATED PARTIES

[*enter name of* Fiduciary Adviser] (is/is not) compensated by the plan for the advice it provides. *(if compensated by the plan, explain what and how compensation is charged (e.g., asset-based fee, flat fee, per advice)). (If applicable,* [*enter name of* Fiduciary Adviser] is not compensated on the basis of the investment(s) selected by you.)

Affiliates of [*enter name of* Fiduciary Adviser] (*if applicable enter,* and other parties with whom [*enter name of* Fiduciary Adviser] is related or has a material financial relationship) also will be providing services for which they will be compensated. These services include: [*enter description of services, e.g., investment management, transfer agent, custodial, and shareholder services for some/all the investment funds available under the plan.*]

When [*enter name of* Fiduciary Adviser] recommends that you invest your assets in an investment fund of its own or one of its affiliates and you follow that advice, [*enter name* of Fiduciary Adviser] or that affiliate will receive compensation from the investment fund based on the amount you invest. The amounts that will be paid by you will vary depending on the particular fund in which you invest your assets and may range from __% to __%. Specific information concerning the fees and other charges of each investment fund is available from [*enter source, such as: your plan administrator, investment fund provider (possibly with Internet Web site address)*]. This information should be reviewed carefully before you make an investment decision.

(*if applicable enter,* [*enter name of* Fiduciary Adviser] or affiliates of [*enter name of* Fiduciary Adviser] also receive compensation from non-affiliated investment funds as a result of investments you make as a result of recommendations of [*enter name of* Fiduciary Adviser]. The amount of this compensation also may vary depending on the particular fund in which you invest. This compensation may range from __% to __%. Specific information concerning the fees and other charges of each investment fund is available from [*enter source, such as: your plan administrator, investment fund provider (possibly with Internet Web site address)*]. This information should be reviewed carefully before you make an investment decision.

(*if applicable enter,* In addition to the above, [*enter name of* Fiduciary Adviser] or affiliates of [*enter name of* Fiduciary Adviser] also receive other fees or compensation, such

as commissions, in connection with the sale, acquisition or holding of investments selected by you as a result of recommendations of [*enter name of* Fiduciary Adviser]. These amounts are: [*enter description of all other fees or compensation to be received in connection with sale, acquisition or holding of investments*]. This information should be reviewed carefully before you make an investment decision.

(*if applicable enter*, When [*enter name of* Fiduciary Adviser] recommends that you take a rollover or other distribution of assets from the plan, or recommends how those assets should subsequently be invested, [*enter name of* Fiduciary Adviser] or affiliates of [*enter name of* Fiduciary Adviser] will receive additional fees or compensation. These amounts are: [*enter description of all other fees or compensation to be received in connection with any rollover or other distribution of plan assets or the investment of distributed assets*]. This information should be reviewed carefully before you make a decision to take a distribution.

CONSIDER IMPACT OF COMPENSATION ON ADVICE

The fees and other compensation that [*enter name of* Fiduciary Adviser] and its affiliates receive on account of assets in [*enter name of* Fiduciary Adviser] (*enter if applicable*, and non-[*enter name of* Fiduciary Adviser]) investment funds are a significant source of revenue for the [*enter name of* Fiduciary Adviser] and its affiliates. You should carefully consider the impact of any such fees and compensation in your evaluation of the investment advice that [*enter name of* Fiduciary Adviser] provides to you. In this regard, you may arrange for the provision of advice by another adviser that may have no material affiliation with or receive no compensation in connection with the investment funds or products offered under the plan. This type of advice is/is not available through your plan.

INVESTMENT RETURNS

While understanding investment-related fees and expenses is important in making informed investment decisions, it is also important to consider additional information about your investment options, such as performance, investment strategies and risks. Specific information related to the past performance and historical rates of return of the investment options available under the plan (has/has not) been provided to you by [*enter source, such as: your plan administrator, investment fund provider*]. (*if applicable enter*, If not provided to you, the information is attached to this document.)

For options with returns that vary over time, past performance does not guarantee how your investment in the option will perform in the future; your investment in these options could lose money.

PARTIES PARTICIPATING IN DEVELOPMENT OF ADVICE PROGRAM OR SELECTION OF INVESTMENT OPTIONS

Name, and describe role of, affiliates or other parties with whom the fiduciary adviser has a material affiliation or contractual relationship that participated in the development of the investment advice program (if this is an arrangement that uses computer models) or the selection of investment options available under the plan.

USE OF PERSONAL INFORMATION

Include a brief explanation of the following—What personal information will be collected; How the information will be used; Parties with whom information will be shared; How the information will be protected; and When and how notice of the Fiduciary Adviser's privacy statement will be available to participants and beneficiaries.

Should you have any questions about [*enter name of* Fiduciary Adviser] or the information contained in this document, you may contact [*enter name of contact person for fiduciary adviser, telephone number, address*].

[76 FR 66162, Oct. 25, 2011]

§ 2550.408g–2 Investment advice—fiduciary election.

(a) *General.* Section 408(g)(11)(A) of the Employee Retirement Income Security Act, as amended (ERISA), provides that a person who develops a computer model or who markets a computer model or investment advice program used in an ''eligible investment advice arrangement'' shall be treated as a fiduciary of a plan by reason of the provision of investment advice referred to in ERISA section 3(21)(A)(ii) to the plan participant or beneficiary, and shall be treated as a ''fiduciary adviser'' for purposes of ERISA sections 408(b)(14) and 408(g), except that the Secretary of Labor may prescribe rules under which only one fiduciary adviser may elect to be treated as a fiduciary with respect to the plan. Section 4975(f)(8)(J)(i) of the Internal Revenue Code, as amended (the Code), contains a parallel provision to ERISA section 408(g)(11)(A) that applies for purposes of Code sections 4975(d)(17) and 4975(f)(8). This section sets forth requirements that must be satisfied in order for one such fiduciary adviser to elect to be treated as a fiduciary with

respect to a plan under an eligible investment advice arrangement.

(b)(1) If an election meets the requirements in paragraph (b)(2) of this section, then the person identified in the election shall be the sole fiduciary adviser treated as a fiduciary by reason of developing or marketing the computer model, or marketing the investment advice program, used in an eligible investment advice arrangement.

(2) An election satisfies the requirements of this paragraph (b) with respect to an eligible investment advice arrangement if the election is in writing and such writing—

(i) Identifies the investment advice arrangement, and the person offering the arrangement, with respect to which the election is to be effective;

(ii) Identifies a person who—

(A) Is described in any of 29 CFR 2550.408g–1(c)(2)(i)(A) through (E),

(B) Develops the computer model, or markets the computer model or investment advice program, utilized in satisfaction of 29 CFR 2550.408g–1(b)(4) with respect to the arrangement, and

(C) Acknowledges that it elects to be treated as the only fiduciary, and fiduciary adviser, by reason of developing such computer model, or marketing such computer model or investment advice program;

(iii) Is signed by the person identified in paragraph (b)(2)(ii) of this section;

(iv) Is furnished to the person who authorized the arrangement, in accordance with 29 CFR 2550.408g–1(b)(5); and

(v) Is maintained in accordance with 29 CFR 2550.408g–1(d).

[76 FR 66167, Oct. 25, 2011]

§ 2550.412–1 Temporary bonding requirements.

(a) Pending the issuance of permanent regulations with respect to the bonding provisions under section 412 of the Employee Retirement Income Security Act of 1974 (the Act), any plan official, as defined in section 412(a) of the Act, shall be deemed to be in compliance with the bonding requirements of the Act if he or she is bonded under a bond which would have been in compliance with section 13 of the Welfare and Pension Plans Disclosure Act, as amended (the WPPDA), and with the basic bonding requirements of subparts A through E of part 2580, title 29 CFR, and with the prohibition against bonding by parties interested in the plan contained in subpart G of part 2580 of such title, or would be exempt from such bonding requirements because bonding would not be required under the exemption provisions contained in subpart F of part 2580 of such title. Part 2580 of this title incorporates material previously designated as subparts A through E of part 464, subpart B of part 465 and part 485 of this title of the CFR. The requirements which are set forth in the temporary regulations hereby adopted shall be applicable to all employee benefit plans covered by the Act, including those plans which were not covered by the WPPDA. Thus, for example, the regulations so adopted are applicable to plans containing fewer than 26 participants, although such plans were not covered by the WPPDA.

(b) For the purpose of this temporary regulation, any bond or rider thereto obtained by a plan official which contains a reference to the WPPDA will be construed by the Secretary to refer to the Act: *Provided*, That the surety company so agrees.

(c) For the purpose of this regulation,

(1) Any reference to section 13 of the WPPDA or any subsection thereof in the regulations issued under the WPPDA and which are incorporated by reference by this temporary regulation shall be deemed to refer to section 412 of the Act, or the corresponding subsection thereof,

(2) Where the particular phrases set forth in the Act are not identical to the phrases in the WPPDA and the regulations issued pursuant thereto, the phrases appearing in the Act shall be substituted by operation of law, and

(3) Where the phrases are identical but the meaning is different, the meaning given such phrases by the Act shall govern. For example, the phrase ''administrators, officers, and employees of any employee welfare benefit plan or of any employee pension benefit plan subject to this Act who handle funds or other property of such plan'' which appears in section 13 of the WPPDA and the regulations issued thereunder shall be construed to mean, for purposes of this regulation, ''plan officials'', which

is the term appearing in section 412 of the Act, and the terms ''employee welfare benefit plan'' and ''employee pension benefit plan'' shall be given the meaning assigned to them by the Act, and not the meaning set forth in the WPPDA.

(d) The requirements of this temporary regulation, as set forth in paragraphs (a) through (c) of this section, shall remain in effect pending the issuance of permanent regulations by the Secretary.

[40 FR 2203, Jan. 10, 1975. Redesignated at 40 FR 20629, May 12, 1975, as amended at 50 FR 26706, June 28, 1985]

SUBCHAPTER G—ADMINISTRATION AND ENFORCEMENT UNDER THE EMPLOYEE RETIREMENT INCOME SECURITY ACT OF 1974

PART 2560—RULES AND REGULATIONS FOR ADMINISTRATION AND ENFORCEMENT

Sec.
2560.502–1 Requests for enforcement pursuant to section 502(b)(2).
2560.502c–2 Civil penalties under section 502(c)(2).
2560.502c–4 Civil penalties under section 502(c)(4).
2560.502c–5 Civil penalties under section 502(c)(5).
2560.502c–6 Civil penalties under section 502(c)(6).
2560.502c–7 Civil penalties under section 502(c)(7).
2560.502c–8 Civil penalties under section 502(c)(8).
2560.502i–1 Civil penalties under section 502(i).
2560.503–1 Claims procedure.
2560.521–1 Cease and desist and seizure orders under section 521.
2560.521–2 Disclosure of order and proceedings.
2560.521–3 Effect on other enforcement authority.
2560.521–4 Cross-reference.

AUTHORITY: 29 U.S.C. 1002(40), 1132, 1133, 1134, 1135, and 1151; and Secretary of Labor's Order 1–2011, 77 FR 1088 (Jan. 9, 2012).

§ 2560.502–1 Requests for enforcement pursuant to section 502(b)(2).

(a) *Form, content and filing.* All requests by participants, beneficiaries, and fiduciaries for the Secretary of Labor to exercise his enforcement authority pursuant to section 502(a)(5), 29 U.S.C. 1132(a)(5), with respect to a violation of, or the enforcement of, parts 2 and 3 of title I of the Employee Retirement Income Security Act of 1974 (the Act) shall be in writing and shall contain information sufficient to form a basis for identifying the participant, beneficiary, or fiduciary and the plan involved. All such requests shall be considered filed if they are directed to and received by any office or official of the Department of Labor or referred to and received by any such office or official by any party to whom such writing is directed.

(b) *Consideration.* The Secretary of Labor retains discretion to determine whether any enforcement proceeding should be commenced in the case of any request received pursuant to paragraph (a) of this section, and he may, but shall not be required to, exercise his authority pursuant to section 502(a)(5) of the Act only if he determines that such violation affects, or such enforcement is necessary to protect claims of participants or beneficiaries to benefits under the plan.

[43 FR 50175, Oct. 27, 1978]

§ 2560.502c–2 Civil penalties under section 502(c)(2).

(a) *In general.* (1) Pursuant to the authority granted the Secretary under section 502(c)(2) of the Employee Retirement Income Security Act of 1974, as amended (the Act), the administrator (within the meaning of section 3(16)(A)) of an employee benefit plan (within the meaning of section 3(3) and § 2510.3–1, *et seq.*) for which an annual report is required to be filed under section 101(b)(1) shall be liable for civil penalties assessed by the Secretary under section 502(c)(2) of the Act in each case in which there is a failure or refusal to file the annual report required to be filed under section 101(b)(1).

(2) For purposes of this section, a failure or refusal to file the annual report required to be filed under section 101(b)(1) shall mean a failure or refusal to file, in whole or in part, that information described in section 103 and § 2520.103–1, *et seq.*, on behalf of the plan at the time and in the manner prescribed therefor.

(b) *Amount assessed.* (1) The amount assessed under section 502(c)(2) of the Act shall be determined by the Department of Labor, taking into consideration the degree and/or willfulness of the failure or refusal to file the annual report. However, the amount assessed under section 502(c)(2) of the Act shall not exceed $1,000 a day (or such other

maximum amount as may be established by regulation pursuant to the Federal Civil Penalties Inflation Adjustment Act of 1990, as amended), computed from the date of the administrator's failure or refusal to file the annual report and, except as provided in paragraph (b)(2) of this section, continuing up to the date on which an annual report satisfactory to the Secretary is filed.

(2) If upon receipt of a notice of intent to assess a penalty (as described in paragraph (c) of this section) the administrator files a statement of reasonable cause for the failure to file, in accordance with paragraph (e) of this section, a penalty shall not be assessed for any day from the date the Department serves the administrator with a copy of such notice until the day after the Department serves notice on the administrator of its determination on reasonable cause and its intention to assess a penalty (as described in paragraph (g) of this section).

(3) For purposes of this paragraph, the date on which the administrator failed or refused to file the annual report shall be the date on which the annual report was due (determined without regard to any extension for filing). An annual report which is rejected under section 104(a)(4) for a failure to provide material information shall be treated as a failure to file an annual report when a revised report satisfactory to the Department is not filed within 45 days of the date of the Department's notice of rejection.

A penalty shall not be assessed under section 502(c)(2) for any day earlier than the day after the date of an administrator's failure or refusal to file the annual report if a revised filing satisfactory to the Department is not submitted within 45 days of the date of the notice of rejection by the Department.

(c) *Notice of intent to assess a penalty.* Prior to the assessment of any penalty under section 502(c)(2), the Department shall provide to the administrator of the plan a written notice indicating the Department's intent to assess a penalty under section 502(c)(2), the amount of such penalty, the period to which the penalty applies, and the reason(s) for the penalty.

(d) *Reconsideration or waiver of penalty to be assessed.* The Department may determine that all or part of the penalty amount in the notice of intent to assess a penalty shall not be assessed on a showing that the administrator complied with the requirements of section 101(b)(1) of the Act or on a showing by the administrator of mitigating circumstances regarding the degree or willfulness of the noncompliance.

(e) *Showing of reasonable cause.* Upon issuance by the Department of a notice of intent to assess a penalty, the administrator shall have thirty (30) days from the date of service of the notice, as described in paragraph (i) of this section, to file a statement of reasonable cause explaining why the penalty, as calculated, should be reduced, or not be assessed, for the reasons set forth in paragraph (d) of this section. Such statement must be made in writing and set forth all the facts alleged as reasonable cause for the reduction or nonassessment of the penalty. The statement must contain a declaration by the administrator that the statement is made under the penalties of perjury.

(f) *Failure to file a statement of reasonable cause.* Failure of an administrator to file a statement of reasonable cause within the thirty (30) day period described in paragraph (e) of this section shall be deemed to constitute a waiver of the right to appear and contest the facts alleged in the notice of intent, and such failure shall be deemed an admission of the facts alleged in the notice for purposes of any proceeding involving the assessment of a civil penalty under section 502(c)(2) of the Act. Such notice shall then become a final order of the Secretary, within the meaning of § 2570.61(g) of this chapter, forty-five (45) days from the date of service of the notice.

(g) *Notice of the determination on statement of reasonable cause.* (1) The Department, following a review of all the facts alleged in support of no assessment or a complete or partial waiver of the penalty, shall notify the administrator, in writing, of its determination to waive the penalty, in whole or in part, and/or assess a penalty. If it is the determination of the Department to assess a penalty, the notice shall indicate the amount of the penalty, not

to exceed the amount described in paragraph (c) of this section. This notice is a ''pleading'' for purposes of § 2570.61(m) of this chapter.

(2) Except as provided in paragraph (h) of this section, a notice issued pursuant to paragraph (g)(1) of this section, indicating the Department's intention to assess a penalty, shall become a final order, within the meaning of § 2570.61(g) of this chapter, forty-five (45) days from the date of service of the notice.

(h) *Administrative hearing.* A notice issued pursuant to paragraph (g) of this section will not become a final order, within the meaning of § 2570.61(g) of this chapter, if, within thirty (30) days from the date of the service of the notice, the administrator or a representative thereof files a request for a hearing under §§ 2570.60 through 2570.71 of this chapter, and files an answer to the notice. The request for hearing and answer must be filed in accordance with § 2570.62 of this chapter and § 18.4 of this title. The answer opposing the proposed sanction shall be in writing, and supported by reference to specific circumstances or facts surrounding the notice of determination issued pursuant to paragraph (g) of this section.

(i) *Service of notices and filing of statements.* (1) Service of a notice for purposes of paragraphs (c) and (g) of this section shall be made:

(i) By delivering a copy to the administrator or representative thereof;

(ii) By leaving a copy at the principal office, place of business, or residence of the administrator or representative thereof; or

(iii) By mailing a copy to the last known address of the administrator or representative thereof.

(2) If service is accomplished by certified mail, service is complete upon mailing. If service is by regular mail, service is complete upon receipt by the addressee. When service of a notice under paragraph (c) or (g) of this section is by certified mail, five (5) days shall be added to the time allowed by these rules for the filing of a statement, or a request for hearing and answer, as applicable.

(3) For purposes of this section, a statement of reasonable cause shall be considered filed:

(i) Upon mailing, if accomplished using United States Postal Service certified mail or Express Mail;

(ii) Upon receipt by the delivery service, if accomplished using a ''designated private delivery service'' within the meaning of 26 U.S.C. 7502(f);

(iii) Upon transmittal, if transmitted in a manner specified in the notice of intent to assess a penalty as a method of transmittal to be accorded such special treatment; or

(iv) In the case of any other method of filing, upon receipt by the Department at the address provided in the notice of intent to assess a penalty.

(j) *Liability.* (1) If more than one person is responsible as administrator for the failure to file the annual report, all such persons shall be jointly and severally liable with respect to such failure.

(2) Any person against whom a civil penalty has been assessed under section 502(c)(2) pursuant to a final order, within the meaning of § 2570.61(g), shall be personally liable for the payment of such penalty.

(k) *Cross-reference.* See §§ 2570.60 through 2570.71 of this chapter for procedural rules relating to administrative hearings under section 502(c)(2) of the Act.

[54 FR 26894, June 26, 1989, as amended at 67 FR 777, Jan. 7, 2002; 68 FR 3734, Jan. 24, 2003]

§ 2560.502c–4 Civil penalties under section 502(c)(4).

(a) *In general.* (1) Pursuant to the authority granted the Secretary under section 502(c)(4) of the Employee Retirement Income Security Act of 1974, as amended (the Act), the administrator (within the meaning of section 3(16)(A) of the Act) shall be liable for civil penalties assessed by the Secretary under section 502(c)(4) of the Act, for failure or refusal to furnish:

(i) Notice of funding-based limits in accordance with section 101(j) of the Act;

(ii) Actuarial, financial or funding information in accordance with section 101(k) of the Act;

(iii) Notice of potential withdrawal liability in accordance with section 101(l) of the Act; or

(iv) Notice of rights and obligations under an automatic contribution arrangement in accordance with section 514(e)(3) of the Act.

(2) For purposes of this section, a failure or refusal to furnish the items referred to in paragraph (a)(1) above shall mean a failure or refusal to furnish, in whole or in part, the items required under section 101(j), (k), or (l), or section 514(e)(3) of the Act at the relevant times and manners prescribed in such sections.

(b) *Amount assessed.* (1) The amount assessed under section 502(c)(4) of the Act for each separate violation shall be determined by the Department of Labor, taking into consideration the degree or willfulness of the failure or refusal to furnish the items referred to in paragraph (a) of this section. However, the amount assessed for each violation under section 502(c)(4) of the Act shall not exceed $1,000 a day (or such other maximum amount as may be established by regulation pursuant to the Federal Civil Penalties Inflation Adjustment Act of 1990, as amended), computed from the date of the administrator's failure or refusal to furnish the items referred to in paragraph (a) of this section.

(2) For purposes of calculating the amount to be assessed under this section, a failure or refusal to furnish the item with respect to any person entitled to receive such item, shall be treated as a separate violation under section 101(j), (k), or (l), or section 514(e)(3) of the Act, as applicable.

(c) *Notice of intent to assess a penalty.* Prior to the assessment of any penalty under section 502(c)(4) of the Act, the Department shall provide to the administrator of the plan a written notice indicating the Department's intent to assess a penalty under section 502(c)(4) of the Act, the amount of such penalty, the number of individuals on which the penalty is based, the period to which the penalty applies, and the reason(s) for the penalty.

(d) *Reconsideration or waiver of penalty to be assessed.* The Department may determine that all or part of the penalty amount in the notice of intent to assess a penalty shall not be assessed on a showing that the administrator complied with the requirements of section 101(j), (k), or (l), or section 514(e)(3) of the Act, as applicable, or on a showing by such person of mitigating circumstances regarding the degree or willfulness of the noncompliance.

(e) *Showing of reasonable cause.* Upon issuance by the Department of a notice of intent to assess a penalty, the administrator shall have thirty (30) days from the date of service of the notice, as described in paragraph (i) of this section, to file a statement of reasonable cause explaining why the penalty, as calculated, should be reduced, or not be assessed, for the reasons set forth in paragraph (d) of this section. Such statement must be made in writing and set forth all the facts alleged as reasonable cause for the reduction or nonassessment of the penalty. The statement must contain a declaration by the administrator that the statement is made under the penalties of perjury.

(f) *Failure to file a statement of reasonable cause.* Failure to file a statement of reasonable cause within the thirty (30) day period described in paragraph (e) of this section shall be deemed to constitute a waiver of the right to appear and contest the facts alleged in the notice of intent, and such failure shall be deemed an admission of the facts alleged in the notice for purposes of any proceeding involving the assessment of a civil penalty under section 502(c)(4) of the Act. Such notice shall then become a final order of the Secretary, within the meaning of § 2570.131(g) of this chapter, forty-five (45) days from the date of service of the notice.

(g) *Notice of determination on statement of reasonable cause.* (1) The Department, following a review of all of the facts in a statement of reasonable cause alleged in support of nonassessment or a complete or partial waiver of the penalty, shall notify the administrator, in writing, of its determination on the statement of reasonable cause and its determination whether to waive the penalty in whole or in part, and/or assess a penalty. If it is the determination of the Department to assess a penalty, the notice shall indicate the amount of the penalty assessment, not to exceed the amount described in

paragraph (c) of this section. This notice is a ''pleading'' for purposes of § 2570.131(m) of this chapter.

(2) Except as provided in paragraph (h) of this section, a notice issued pursuant to paragraph (g)(1) of this section, indicating the Department's determination to assess a penalty, shall become a final order, within the meaning of § 2570.131(g) of this chapter, forty-five (45) days from the date of service of the notice.

(h) *Administrative hearing.* A notice issued pursuant to paragraph (g) of this section will not become a final order, within the meaning of § 2570.131(g) of this chapter, if, within thirty (30) days from the date of the service of the notice, the administrator or a representative thereof files a request for a hearing under §§ 2570.130 through 2570.141 of this chapter, and files an answer to the notice. The request for hearing and answer must be filed in accordance with § 2570.132 of this chapter and § 18.4 of this title. The answer opposing the proposed sanction shall be in writing, and supported by reference to specific circumstances or facts surrounding the notice of determination issued pursuant to paragraph (g) of this section.

(i) *Service of notices and filing of statements.* (1) Service of a notice for purposes of paragraphs (c) and (g) of this section shall be made:

(i) By delivering a copy to the administrator or representative thereof;

(ii) By leaving a copy at the principal office, place of business, or residence of the administrator or representative thereof; or

(iii) By mailing a copy to the last known address of the administrator or representative thereof.

(2) If service is accomplished by certified mail, service is complete upon mailing. If service is by regular mail, service is complete upon receipt by the addressee. When service of a notice under paragraph (c) or (g) of this section is by certified mail, five days shall be added to the time allowed by these rules for the filing of a statement or a request for hearing and answer, as applicable.

(3) For purposes of this section, a statement of reasonable cause shall be considered filed:

(i) Upon mailing, if accomplished using United States Postal Service certified mail or express mail;

(ii) Upon receipt by the delivery service, if accomplished using a ''designated private delivery service'' within the meaning of 26 U.S.C. 7502(f);

(iii) Upon transmittal, if transmitted in a manner specified in the notice of intent to assess a penalty as a method of transmittal to be accorded such special treatment; or

(iv) In the case of any other method of filing, upon receipt by the Department at the address provided in the notice of intent to assess a penalty.

(j) *Liability.* (1) If more than one person is responsible as administrator for the failure to furnish the items required under section 101(j), (k), or (l), or section 514(e)(3) of the Act, as applicable, all such persons shall be jointly and severally liable for such failure. For purposes of paragraph (a)(1)(iii) of this section, the term ''administrator'' shall include plan sponsor (within the meaning of section 3(16)(B) of the Act).

(2) Any person, or persons under paragraph (j)(1) of this section, against whom a civil penalty has been assessed under section 502(c)(4) of the Act, pursuant to a final order within the meaning of § 2570.131(g) of this chapter shall be personally liable for the payment of such penalty.

(k) *Cross-references.* (1) The procedural rules in §§ 2570.130 through 2570.141 of this chapter apply to administrative hearings under section 502(c)(4) of the Act.

(2) When applying procedural rules in §§ 2570.130 through 2570.140:

(i) Wherever the term ''502(c)(7)'' appears, such term shall mean ''502(c)(4)'';

(ii) Reference to § 2560.502c–7(g) in 2570.131(c) shall be construed as reference to § 2560.502c–4(g) of this chapter;

(iii) Reference to § 2560.502c–7(e) in § 2570.131(g) shall be construed as reference to § 2560.502c–4(e) of this chapter;

(iv) Reference to § 2560.502c–7(g) in § 2570.131(m) shall be construed as reference to § 2560.502c–4(g); and

(v) Reference to §§ 2560.502c–7(g) and 2560.502c–7(h) in § 2570.134 shall be construed as reference to §§ 2560.502c–4(g) and 2560.502c–4(h), respectively.

[74 FR 20, Jan. 2, 2009]

§ 2560.502c–5 Civil penalties under section 502(c)(5).

(a) *In general*—(1) Pursuant to the authority granted the Secretary under section 502(c)(5) of the Employee Retirement Income Security Act of 1974, as amended (the Act), the administrator of a multiple employer welfare arrangement (MEWA) (within the meaning of section 3(40)(A) of the Act) that is not a group health plan, and that provides benefits consisting of medical care (within the meaning of section 733(a)(2)), for which a report is required to be filed under section 101(g) of the Act and 29 CFR 2520.101–2, shall be liable for civil penalties assessed by the Secretary under section 502(c)(5) of the Act for each failure or refusal to file a completed report required to be filed under section 101(g) and 29 CFR 2520.101–2. The term ''administrator'' is defined in 29 CFR 2520.101–2(b).

(2) For purposes of this section, a failure or refusal to file the report required to be filed under section 101(g) shall mean a failure or refusal to file, in whole or in part, that information described in section 101(g) and 29 CFR 2520.101–2, on behalf of the MEWA, at the time and in the manner prescribed therefor.

(b) *Amount assessed*—(1) The amount assessed under section 502(c)(5) shall be determined by the Department of Labor, taking into consideration the degree and/or willfulness of the failure to file the report. However, the amount assessed under section 502(c)(5) of the Act shall not exceed $1,000 a day, computed from the date of the administrator's failure or refusal to file the report and, except as provided in paragraph (b)(2) of this section, continuing up to the date on which a report meeting the requirements of section 101(g) and 29 CFR 2520.101–2, as determined by the Secretary, is filed.

(2) If, upon receipt of a notice of intent to assess a penalty (as described in paragraph (c) of this section), the administrator files a statement of reasonable cause for the failure to file, in accordance with paragraph (e) of this section, a penalty shall not be assessed for any day from the date the Department serves the administrator with a copy of such notice until the day after the Department serves notice on the administrator of its determination on reasonable cause and its intention to assess a penalty (as described in paragraph (g) of this section).

(3) For purposes of this paragraph, the date on which the administrator failed or refused to file the report shall be the date on which the report was due (determined without regard to any extension of time for filing). A report which is rejected under 29 CFR 2520.101–2 shall be treated as a failure to file a report when a revised report meeting the requirements of this section is not filed within 45 days of the date of the Department's notice of rejection. If a revised report meeting the requirements of this section, as determined by the Secretary, is not submitted within 45 days of the date of the notice of rejection by the Department, a penalty shall be assessed under section 502(c)(5) beginning on the day after the date of the administrator's failure or refusal to file the report.

(c) *Notice of intent to assess a penalty*. Prior to the assessment of any penalty under section 502(c)(5), the Department shall provide to the administrator of the MEWA a written notice indicating the Department's intent to assess a penalty under section 502(c)(5), the amount of such penalty, the period to which the penalty applies, and a statement of the facts and the reason(s) for the penalty.

(d) *Reconsideration or waiver of penalty to be assessed*. The Department may determine that all or part of the penalty amount in the notice of intent to assess a penalty shall not be assessed on a showing that the administrator complied with the requirements of section 101(g) of the Act or on a showing by the administrator of mitigating circumstances regarding the degree or willfulness of the noncompliance.

(e) *Showing of reasonable cause*. Upon issuance by the Department of a notice of intent to assess a penalty, the administrator shall have thirty (30) days from the date of service of the notice, as described in paragraph (i) of this section, to file a statement of reasonable cause explaining why the penalty, as calculated, should be reduced, or not be assessed, for the reasons set forth in paragraph (d) of this section. Such statement must be made in writing and

set forth all the facts alleged as reasonable cause for the reduction or nonassessment of the penalty. The statement must contain a declaration by the administrator that the statement is made under the penalties of perjury.

(f) *Failure to file a statement of reasonable cause.* Failure of an administrator to file a statement of reasonable cause within the thirty (30) day period described in paragraph (e) of this section shall be deemed to constitute a waiver of the right to appear and contest the facts alleged in the notice of intent, and such failure shall be deemed an admission of the facts alleged in the notice for purposes of any proceeding involving the assessment of a civil penalty under section 502(c)(5) of the Act. Such notice shall then become a final order of the Secretary, within the meaning of 29 CFR 2570.91(g), forty-five (45) days from the date of service of the notice.

(g) *Notice of the determination on statement of reasonable cause*—(1) The Department, following a review of all the facts alleged in support of no assessment or a complete or partial waiver of the penalty, shall notify the administrator, in writing, of its determination to waive the penalty, in whole or in part, and/or assess a penalty. If it is the determination of the Department to assess a penalty, the notice shall indicate the amount of the penalty, not to exceed the amount described in paragraph (c) of this section, and a brief statement of the reasons for assessing the penalty. This notice is a ''pleading'' for purposes of 29 CFR 2570.91(m).

(2) Except as provided in paragraph (h) of this section, a notice issued pursuant to paragraph (g)(1) of this section, indicating the Department's intention to assess a penalty, shall become a final order, within the meaning of 29 CFR 2570.91(g), forty-five (45) days from the date of service of the notice.

(h) *Administrative hearing.* A notice issued pursuant to paragraph (g) of this section will not become a final order, within the meaning of 29 CFR 2570.91(g), if, within thirty (30) days from the date of the service of the notice, the administrator or a representative thereof files a request for a hearing under 29 CFR 2570.90 through 2570.101, and files an answer to the notice. The request for hearing and answer must be filed in accordance with 29 CFR 2570.92 and 18.4. The answer opposing the proposed sanction shall be in writing, and supported by reference to specific circumstances or facts surrounding the notice of determination issued pursuant to paragraph (g) of this section.

(i) *Service of notices and filing of statements*—(1) Service of a notice for purposes of paragraphs (c) and (g) of this section shall be made:

(i) By delivering a copy to the administrator or representative thereof;

(ii) By leaving a copy at the principal office, place of business, or residence of the administrator or representative thereof; or

(iii) By mailing a copy to the last known address of the administrator or representative thereof.

(2) If service is accomplished by certified mail, service is complete upon mailing. If service is by regular mail, service is complete upon receipt by the addressee. When service of a notice under paragraph (c) or (g) of this section is by certified mail, five (5) days shall be added to the time allowed by these rules for the filing of a statement, or a request for hearing and answer, as applicable.

(3) For purposes of this section, a statement of reasonable cause shall be considered filed:

(i) Upon mailing, if accomplished using United States Postal Service certified mail or Express Mail;

(ii) Upon receipt by the delivery service, if accomplished using a ''designated private delivery service'' within the meaning of 26 U.S.C. 7502(f);

(iii) Upon transmittal, if transmitted in a manner specified in the notice of intent to assess a penalty as a method of transmittal to be accorded such special treatment; or

(iv) In the case of any other method of filing, upon receipt by the Department at the address provided in the notice of intent to assess a penalty.

(j) *Liability*—(1) If more than one person is responsible as administrator for the failure to file the report, all such persons shall be jointly and severally liable with respect to such failure.

(2) Any person against whom a civil penalty has been assessed under section 502(c)(5) pursuant to a final order, within the meaning of 29 CFR 2570.91(g), shall be personally liable for the payment of such penalty.

(k) *Cross-reference. See* 29 CFR 2570.90 through 2570.101 for procedural rules relating to administrative hearings under section 502(c)(5) of the Act.

[68 FR 17505, Apr. 9, 2003]

§ 2560.502c–6 Civil penalties under section 502(c)(6).

(a) *In general.* (1) Pursuant to the authority granted the Secretary under section 502(c)(6) of the Employee Retirement Income Security Act of 1974, as amended (the Act), the administrator (within the meaning of section 3(16)(A) of the Act) of an employee benefit plan (within the meaning of section 3(3) of the Act and § 2510.3–1 of this chapter) shall be liable for civil penalties assessed by the Secretary under section 502(c)(6) of the Act in each case in which there is a failure or refusal to furnish to the Secretary documents requested under section 104(a)(6) of the Act and § 2520.104a–8 of this chapter.

(2) For purposes of this section, a failure or refusal to furnish documents shall mean a failure or refusal to furnish, in whole or in part, the documents requested under section 104(a)(6) of the Act and § 2520.104a–8 of this chapter at the time and in the manner prescribed in the request.

(b) *Amount assessed.* (1) The amount assessed under section 502(c)(6) of the Act shall be determined by the Department of Labor, taking into consideration the degree and/or willfulness of the failure or refusal to furnish any document or documents requested by the Department under section 104(a)(6) of the Act. However, the amount assessed under section 502(c)(6) of the Act shall not exceed $100 a day or $1,000 per request (or such other maximum amounts as may be established by regulation pursuant to the Federal Civil Penalties Inflation Adjustment Act of 1990, as amended), computed from the date of the administrator's failure or refusal to furnish any document or documents requested by the Department.

(2) For purposes of calculating the amount to be assessed under this section, the date of a failure or refusal to furnish documents shall not be earlier than the thirtieth day after service of the request under section 104(a)(6) of ERISA and § 2520.104a–8 of this chapter.

(c) *Notice of intent to assess a penalty.* Prior to the assessment of any penalty under section 502(c)(6) of the Act, the Department shall provide to the administrator of the plan a written notice that indicates the Department's intent to assess a penalty under section 502(c)(6) of the Act, the amount of the penalty, the period to which the penalty applies, and the reason(s) for the penalty.

(d) *Reconsideration or waiver of penalty to be assessed.* The Department may determine that all or part of the penalty amount in the notice of intent to assess a penalty shall not be assessed on a showing that the administrator complied with the requirements of section 104(a)(6) of the Act or on a showing by the administrator of mitigating circumstances regarding the degree or willfulness of the noncompliance.

(e) *Showing of reasonable cause.* Upon issuance by the Department of a notice of intent to assess a penalty, the administrator shall have thirty (30) days from the date of service of the notice, as described in paragraph (i) of this section, to file a statement of reasonable cause explaining why the penalty, as calculated, should be reduced or not be assessed, for the reasons set forth in paragraph (d) of this section. Such statement must be made in writing and set forth all the facts alleged as reasonable cause for the reduction or nonassessment of the penalty. The statement must contain a declaration by the administrator that the statement is made under the penalties of perjury.

(f) *Failure to file a statement of reasonable cause.* Failure to file a statement of reasonable cause within the 30 day period described in paragraph (e) of this section shall be deemed to constitute a waiver of the right to appear and contest the facts alleged in the notice of intent, and such failure shall be deemed an admission of the facts alleged in the notice for purposes of any proceeding involving the assessment of a civil penalty under section 502(c)(6) of the Act. Such notice shall then become a final order of the Secretary, within

the meaning of § 2570.111(g) of this chapter, forty-five (45) days from the date of service of the notice.

(g) *Notice of determination on statement of reasonable cause.* (1) The Department, following a review of all of the facts alleged in support of no assessment or a complete or partial waiver of the penalty, shall notify the administrator, in writing, of its determination not to assess or to waive the penalty, in whole or in part, and/or assess a penalty. If it is the determination of the Department to assess a penalty, the notice shall indicate the amount of the penalty, not to exceed the amount described in paragraph (c) of this section. This notice is a ''pleading'' for purposes of § 2570.111(m) of this chapter.

(2) Except as provided in paragraph (h) of this section, a notice issued pursuant to paragraph (g)(1) of this section, indicating the Department's intention to assess a penalty, shall become a final order, within the meaning of § 2570.111(g) of this chapter, forty-five (45) days from the date of service of the notice.

(h) *Administrative hearing.* A notice issued pursuant to paragraph (g) of this section will not become a final order, within the meaning of § 2570.91(g) of this chapter, if, within thirty (30) days from the date of the service of the notice, the administrator or a representative thereof files a request for a hearing under §§ 2570.110 through 2570.121 of this chapter, and files an answer to the notice. The request for hearing and answer must be filed in accordance with § 2570.112 of this chapter and § 18.4 of this title. The answer opposing the proposed sanction shall be in writing, and supported by reference to specific circumstances or facts surrounding the notice of determination issued pursuant to paragraph (g) of this section.

(i) *Service of notices and filing of statements.* (1) Service of a notice for purposes of paragraphs (c) and (g) of this section shall be made:

(i) By delivering a copy to the administrator or representative thereof;

(ii) By leaving a copy at the principal office, place of business, or residence of the administrator or representative thereof; or

(iii) By mailing a copy to the last known address of the administrator or representative thereof.

(2) If service is accomplished by certified mail, service is complete upon mailing. If service is by regular mail, service is complete upon receipt by the addressee. When service of a notice under paragraph (c) or (g) of this section is by certified mail, five (5) days shall be added to the time allowed by these rules for the filing of a statement, or a request for hearing and answer, as applicable.

(3) For purposes of this section, a statement of reasonable cause shall be considered filed:

(i) Upon mailing, if accomplished using United States Postal Service certified mail or Express Mail;

(ii) Upon receipt by the delivery service, if accomplished using a ''designated private delivery service'' within the meaning of 26 U.S.C. 7502(f);

(iii) Upon transmittal, if transmitted in a manner specified in the notice of intent to assess a penalty as a method of transmittal to be accorded such special treatment; or

(iv) In the case of any other method of filing, upon receipt by the Department at the address provided in the notice of intent to assess a penalty.

(j) *Liability.* (1) If more than one person is responsible as administrator for the failure to furnish the document or documents requested under section 104(a)(6) of the Act and its implementing regulations (§ 2520.104a–8 of this chapter), all such persons shall be jointly and severally liable with respect to such failure.

(2) Any person, or persons under paragraph (j)(1) of this section, against whom a civil penalty has been assessed under section 502(c)(6) of the Act pursuant to a final order, within the meaning of § 2570.111(g) of this chapter, shall be personally liable for the payment of such penalty.

(k) *Cross-reference.* See §§ 2570.110 through 2570.121 of this chapter for procedural rules relating to administrative hearings under section 502(c)(6) of the Act.

[67 FR 785, Jan. 7, 2002, as amended at 68 FR 3735, Jan. 24, 2003]

§ 2560.502c–7 Civil penalties under section 502(c)(7).

(a) *In general.* (1) Pursuant to the authority granted the Secretary under section 502(c)(7) of the Employee Retirement Income Security Act of 1974, as amended (the Act), the administrator (within the meaning of section 3(16)(A) of the Act) of an individual account plan (within the meaning of section 101(i)(8) of the Act and § 2520.101–3(d)(2) of this chapter), who fails or refuses to provide notice of a blackout period to affected participants and beneficiaries in accordance with section 101(i) of the Act and § 2520.101–3 of this chapter, or the administrator (within the meaning of section 3(16)(A) of the Act) of an applicable individual account plan (within the meaning of section 101(m) of the Act), who fails or refuses to provide notice of diversification rights to applicable individuals in accordance with section 101(m) of the Act, shall be liable for civil penalties assessed by the Secretary under section 502(c)(7) of the Act.

(2) For purposes of this section, a failure or refusal to provide a notice of blackout period shall mean a failure or refusal, in whole or in part, to provide notice of a blackout period to an affected plan participant or beneficiary at the time and in the manner prescribed by section 101(i) of the Act and § 2520.101–3 of this chapter, and a failure or refusal to provide a notice of diversification rights shall mean a failure or refusal, in whole or in part, to provide notice of diversification rights to an applicable individual at the time and in the manner prescribed by section 101(m) of the Act.

(b) *Amount assessed.* (1) The amount assessed under section 502(c)(7) of the Act for each separate violation shall be determined by the Department of Labor, taking into consideration the degree and/or willfulness of the failure or refusal to provide a notice of blackout period or notice of diversification rights. However, the amount assessed for each violation under section 502(c)(7) of the Act shall not exceed $100 a day (or such other maximum amount as may be established by regulation pursuant to the Federal Civil Penalties Inflation Adjustment Act of 1990, as amended), computed from, in the case of a notice of blackout period under section 101(i) of the Act, the date of the administrator's failure or refusal to provide a notice of blackout period up to and including the date that is the final day of the blackout period for which the notice was required, or in the case of a notice of diversification rights under section 101(m) of the Act, computed from the date that is 30 days before the first date on which rights are exercisable under section 204(j) of the Act up to the date such a notice is furnished.

(2) For purposes of calculating the amount to be assessed under this section, a failure or refusal to provide a notice of blackout period or a notice of diversification rights with respect to any single participant or beneficiary shall be treated as a separate violation under section 101(i) of the Act and § 2520.101–3 of this chapter or section 101(m) of the Act.

(c) *Notice of intent to assess a penalty.* Prior to the assessment of any penalty under section 502(c)(7) of the Act, the Department shall provide to the administrator of the plan a written notice indicating the Department's intent to assess a penalty under section 502(c)(7) of the Act, the amount of such penalty, the number of participants and beneficiaries on which the penalty is based, the period to which the penalty applies, and the reason(s) for the penalty.

(d) *Reconsideration or waiver of penalty to be assessed.* The Department may determine that all or part of the penalty amount in the notice of intent to assess a penalty shall not be assessed on a showing that the administrator complied with the applicable requirements of section 101(i) or section 101(m) of the Act or on a showing by the administrator of mitigating circumstances regarding the degree or willfulness of the noncompliance.

(e) *Showing of reasonable cause.* Upon issuance by the Department of a notice of intent to assess a penalty, the administrator shall have thirty (30) days from the date of service of the notice, as described in paragraph (i) of this section, to file a statement of reasonable cause explaining why the penalty, as calculated, should be reduced, or not be assessed, for the reasons set forth in

paragraph (d) of this section. Such statement must be made in writing and set forth all the facts alleged as reasonable cause for the reduction or nonassessment of the penalty. The statement must contain a declaration by the administrator that the statement is made under the penalties of perjury.

(f) *Failure to file a statement of reasonable cause.* Failure to file a statement of reasonable cause within the 30 day period described in paragraph (e) of this section shall be deemed to constitute a waiver of the right to appear and contest the facts alleged in the notice of intent, and such failure shall be deemed an admission of the facts alleged in the notice for purposes of any proceeding involving the assessment of a civil penalty under section 502(c)(7) of the Act. Such notice shall then become a final order of the Secretary, within the meaning of § 2570.131(g) of this chapter, forty-five (45) days from the date of service of the notice.

(g) *Notice of determination on statement of reasonable cause.* (1) The Department, following a review of all of the facts in a statement of reasonable cause alleged in support of no assessment or a complete or partial waiver of the penalty, shall notify the administrator, in writing, of its determination on the statement of reasonable cause and its determination whether to waive the penalty in whole or in part, and/or assess a penalty. If it is the determination of the Department to assess a penalty, the notice shall indicate the amount of the penalty assessment, not to exceed the amount described in paragraph (c) of this section. This notice is a ''pleading'' for purposes of § 2570.131(m) of this chapter.

(2) Except as provided in paragraph (h) of this section, a notice issued pursuant to paragraph (g)(1) of this section, indicating the Department's determination to assess a penalty, shall become a final order, within the meaning of § 2570.131(g) of this chapter, forty-five (45) days from the date of service of the notice.

(h) *Administrative hearing.* A notice issued pursuant to paragraph (g) of this section will not become a final order, within the meaning of § 2570.131(g) of this chapter, if, within thirty (30) days from the date of the service of the notice, the administrator or a representative thereof files a request for a hearing under §§ 2570.130 through 2570.141 of this chapter, and files an answer to the notice. The request for hearing and answer must be filed in accordance with § 2570.132 of this chapter and § 18.4 of this title. The answer opposing the proposed sanction shall be in writing, and supported by reference to specific circumstances or facts surrounding the notice of determination issued pursuant to paragraph (g) of this section.

(i) *Service of notices and filing of statements.* (1) Service of a notice for purposes of paragraphs (c) and (g) of this section shall be made:

(i) By delivering a copy to the administrator or representative thereof;

(ii) By leaving a copy at the principal office, place of business, or residence of the administrator or representative thereof; or

(iii) By mailing a copy to the last known address of the administrator or representative thereof.

(2) If service is accomplished by certified mail, service is complete upon mailing. If service is by regular mail, service is complete upon receipt by the addressee. When service of a notice under paragraph (c) or (g) of this section is by certified mail, five (5) days shall be added to the time allowed by these rules for the filing of a statement or a request for hearing and answer, as applicable.

(3) For purposes of this section, a statement of reasonable cause shall be considered filed:

(i) Upon mailing, if accomplished using United States Postal Service certified mail or Express Mail;

(ii) Upon receipt by the delivery service, if accomplished using a ''designated private delivery service'' within the meaning of 26 U.S.C. 7502(f);

(iii) Upon transmittal, if transmitted in a manner specified in the notice of intent to assess a penalty as a method of transmittal to be accorded such special treatment; or

(iv) In the case of any other method of filing, upon receipt by the Department at the address provided in the notice of intent to assess a penalty.

(j) *Liability.* (1) If more than one person is responsible as administrator for

the failure to provide a notice of blackout period under section 101(i) of the Act and its implementing regulations (§ 2520.101–3 of this chapter), or the failure to provide a notice of diversification rights under section 101(m) of the Act, all such persons shall be jointly and severally liable for such failure.

(2) Any person, or persons under paragraph (j)(1) of this section, against whom a civil penalty has been assessed under section 502(c)(7) of the Act, pursuant to a final order, within the meaning of § 2570.131(g) of this chapter, shall be personally liable for the payment of such penalty.

(k) *Cross-reference.* See §§ 2570.130 through 2570.141 of this chapter for procedural rules relating to administrative hearings under section 502(c)(7) of the Act.

[68 FR 3736, Jan. 24, 2003, as amended at 72 FR 44972, Aug. 10, 2007]

§ 2560.502c–8 Civil penalties under section 502(c)(8).

(a) *In general.* (1) Pursuant to the authority granted the Secretary under section 502(c)(8) of the Employee Retirement Income Security Act of 1974, as amended (the Act), the plan sponsor (within the meaning of section 3(16)(B)(iii) of the Act) shall be liable for civil penalties assessed by the Secretary under section 502(c)(8) of the Act, for:

(i) Each violation by such sponsor of the requirement under section 305 of the Act to adopt by the deadline established in that section a funding improvement plan or rehabilitation plan with respect to a multiemployer plan which is in endangered or critical status; or

(ii) In the case of a plan in endangered status which is not in seriously endangered status, a failure by the plan to meet the applicable benchmarks under section 305 by the end of the funding improvement period with respect to the plan.

(2) For purposes of this section, violations or failures referred to in paragraph (a)(1) of this section shall mean a failure or refusal, in whole or in part, to adopt a funding improvement or rehabilitation plan, or to meet the applicable benchmarks, at the relevant times and manners prescribed in section 305 of the Act.

(b) *Amount assessed.* The amount assessed under section 502(c)(8) of the Act for each separate violation shall be determined by the Department of Labor, taking into consideration the degree or willfulness of the failure or refusal to comply with the specific requirements referred to in paragraph (a) of this section. However, the amount assessed for each violation under section 502(c)(8) of the Act shall not exceed $1,100 a day (or such other maximum amount as may be established by regulation pursuant to the Federal Civil Penalties Inflation Adjustment Act of 1990, as amended), computed from the date of the plan sponsor's failure or refusal to comply with the specific requirements referred to in paragraph (a) of this section.

(c) *Notice of intent to assess a penalty.* Prior to the assessment of any penalty under section 502(c)(8) of the Act, the Department shall provide to the plan sponsor of the plan a written notice indicating the Department's intent to assess a penalty under section 502(c)(8) of the Act, the amount of such penalty, the period to which the penalty applies, and the reason(s) for the penalty.

(d) *Reconsideration or waiver of penalty to be assessed.* The Department may determine that all or part of the penalty amount in the notice of intent to assess a penalty shall not be assessed on a showing that the plan sponsor complied with the requirements of section 305 of the Act, or on a showing by the plan sponsor of mitigating circumstances regarding the degree or willfulness of the noncompliance.

(e) *Showing of reasonable cause.* Upon issuance by the Department of a notice of intent to assess a penalty, the plan sponsor shall have thirty (30) days from the date of service of the notice, as described in paragraph (i) of this section, to file a statement of reasonable cause explaining why the penalty, as calculated, should be reduced, or not be assessed, for the reasons set forth in paragraph (d) of this section. Such statement must be made in writing and set forth all the facts alleged as reasonable cause for the reduction or nonassessment of the penalty. The statement must contain a declaration by

the plan sponsor that the statement is made under the penalties of perjury.

(f) *Failure to file a statement of reasonable cause.* Failure to file a statement of reasonable cause within the thirty (30) day period described in paragraph (e) of this section shall be deemed to constitute a waiver of the right to appear and contest the facts alleged in the notice of intent, and such failure shall be deemed an admission of the facts alleged in the notice for purposes of any proceeding involving the assessment of a civil penalty under section 502(c)(8) of the Act. Such notice shall then become a final order of the Secretary, within the meaning of § 2570.161(g) of this chapter, forty-five (45) days from the date of service of the notice.

(g) *Notice of determination on statement of reasonable cause.* (1) The Department, following a review of all of the facts in a statement of reasonable cause alleged in support of nonassessment or a complete or partial waiver of the penalty, shall notify the plan sponsor, in writing, of its determination on the statement of reasonable cause and its determination whether to waive the penalty in whole or in part, and/or assess a penalty. If it is the determination of the Department to assess a penalty, the notice shall indicate the amount of the penalty assessment, not to exceed the amount described in paragraph (c) of this section. This notice is a ''pleading'' for purposes of § 2570.161(m) of this chapter.

(2) Except as provided in paragraph (h) of this section, a notice issued pursuant to paragraph (g)(1) of this section, indicating the Department's determination to assess a penalty, shall become a final order, within the meaning of § 2570.161(g) of this chapter, forty-five (45) days from the date of service of the notice.

(h) *Administrative hearing.* A notice issued pursuant to paragraph (g) of this section will not become a final order, within the meaning of § 2570.161(g) of this chapter, if, within thirty (30) days from the date of the service of the notice, the plan sponsor or a representative thereof files a request for a hearing under §§ 2570.160 through 2570.171 of this chapter, and files an answer to the notice. The request for hearing and answer must be filed in accordance with § 2570.162 of this chapter and § 18.4 of this title. The answer opposing the proposed sanction shall be in writing, and supported by reference to specific circumstances or facts surrounding the notice of determination issued pursuant to paragraph (g) of this section.

(i) *Service of notices and filing of statements.* (1) Service of a notice for purposes of paragraphs (c) and (g) of this section shall be made:

(i) By delivering a copy to the plan sponsor or representative thereof;

(ii) By leaving a copy at the principal office, place of business, or residence of the plan sponsor or representative thereof; or

(iii) By mailing a copy to the last known address of the plan sponsor or representative thereof.

(2) If service is accomplished by certified mail, service is complete upon mailing. If service is by regular mail, service is complete upon receipt by the addressee. When service of a notice under paragraph (c) or (g) of this section is by certified mail, five days shall be added to the time allowed by these rules for the filing of a statement or a request for hearing and answer, as applicable.

(3) For purposes of this section, a statement of reasonable cause shall be considered filed:

(i) Upon mailing, if accomplished using United States Postal Service certified mail or express mail;

(ii) Upon receipt by the delivery service, if accomplished using a ''designated private delivery service'' within the meaning of 26 U.S.C. 7502(f);

(iii) Upon transmittal, if transmitted in a manner specified in the notice of intent to assess a penalty as a method of transmittal to be accorded such special treatment; or

(iv) In the case of any other method of filing, upon receipt by the Department at the address provided in the notice of intent to assess a penalty.

(j) *Liability.* (1) If more than one person is responsible as plan sponsor for violations referred to in paragraph (a) of this section, all such persons shall be jointly and severally liable for such violations.

(2) Any person, or persons under paragraph (j)(1) of this section, against

whom a civil penalty has been assessed under section 502(c)(8) of the Act, pursuant to a final order within the meaning of § 2570.161(g) of this chapter, shall be personally liable for the payment of such penalty.

(k) *Cross-reference.* See §§ 2570.160 through 2570.171 of this chapter for procedural rules relating to administrative hearings under section 502(c)(8) of the Act.

[75 FR 8800, Feb. 26, 2010]

§ 2560.502i–1 Civil penalties under section 502(i).

(a) *In general.* Section 502(i) of the Employee Retirement Income Security Act of 1974 (ERISA or the Act) permits the Secretary of Labor to assess a civil penalty against a party in interest who engages in a prohibited transaction with respect to an employee benefit plan other than a plan described in section 4975(e)(1) of the Internal Revenue Code (the Code). The initial penalty under section 502(i) is five percent of the total ''amount involved'' in the prohibited transaction (unless a lesser amount is otherwise agreed to by the parties). However, if the prohibited transaction is not corrected during the ''correction period,'' the civil penalty shall be 100 percent of the ''amount involved'' (unless a lesser amount is otherwise agreed to by the parties). Paragraph (b) of this section defines the term ''amount involved,'' paragraph (c) defines the term ''correction,'' and paragraph (d) defines the term ''correction period.'' Paragraph (e) illustrates the computation of the civil penalty under section 502(i). Paragraph (f) is a cross reference to the Department's procedural rules for section 502(i) proceedings.

(b) *Amount involved.* Section 502(i) of ERISA states that the term ''amount involved'' in that section shall be defined as it is defined under section 4975(f)(4) of the Code. As provided in 26 CFR 141.4975.13, 26 CFR 53.4941(e)–1(b) is controlling with respect to the interpretation of the term ''amount involved'' under section 4975 of the Code. Accordingly, the Department of Labor will apply the principles set out at 26 CFR 53.4941(e)–1(b) in determining the ''amount involved'' in a transaction subject to the civil penalty provided by section 502(i) of the Act and this section.

(c) *Correction.* Section 502(i) of ERISA states that the term ''correction'' shall be defined in a manner that is consistent with the definition of that term under section 4975(f)(5) of the Code. As provided in 26 CFR 141.4975–13, 26 CFR 53.4941(e)–1(c) is controlling with respect to the interpretation of the term ''correction'' for purposes of section 4975 of the Code. Accordingly, the Department of Labor will apply the principles set out in 26 CFR 53.4941(e)–(1)(c) in interpreting the term ''correction'' under section 502(i) of the Act and this section.

(d) *Correction period.* (1) In general, the ''correction period'' begins on the date the prohibited transaction occurs and ends 90 days after a final agency order with respect to such transaction.

(2) When a party in interest seeks judicial review within 90 days of a final agency order in an ERISA section 502(i) proceeding, the correction period will end 90 days after the entry of a final order in the judicial action.

(3) The following examples illustrate the operation of this paragraph:

(i) A party in interest receives notice of the Department's intent to impose the section 502(i) penalty and does not invoke the ERISA section 502(i) prohibited transaction penalty proceedings described in § 2570.1 of this chapter within 30 days of such notice. As provided in § 2570.5 of this chapter, the notice of the intent to impose a penalty becomes a final order after 30 days. Thus, the ''correction period'' ends 90 days after the expiration of the 30 day period.

(ii) A party in interest contests a proposed section 502(i) penalty, but does not appeal an adverse decision of the administrative law judge in the proceeding. As provided in § 2570.10(a) of this chapter, the decision of the administrative law judge becomes a final order of the Department unless the decision is appealed within 20 days after the date of such order. Thus, the correction period ends 90 days after the expiration of such 20 day period.

(iii) The Secretary of Labor issues to a party in interest a decision upholding an administrative law judge's adverse decision. As provided in § 2570.12(b) of this chapter, the decision of the Secretary becomes a final order of the Department immediately. Thus, the correction period will end 90 days after the issuance of the Secretary's order unless the party in interest judicially contests the order within that 90 day period. If the party

in interest so contests the order, the correction period will end 90 days after the entry of a final order in the judicial action.

(e) *Computation of the section 502(i) penalty.* (1) In general, the civil penalty under section 502(i) is determined by applying the applicable percentage (five percent or one hundred percent) to the aggregate amount involved in the transaction. However, a continuing prohibited transaction, such as a lease or a loan, is treated as giving rise to a separate event subject to the sanction for each year (as measured from the anniversary date of the transaction) in which the transaction occurs.

(2) The following examples illustrate the computation of the section 502(i) penalty:

(i) An employee benefit plan purchases property from a party in interest at a price of $10,000. The fair market value of the property is $5,000. The ''amount involved'' in that transaction, as determined under 26 CFR 53.4941(e)–1(b), is $10,000 (the greater of the amount paid by the plan or the fair market value of the property). The initial five percent penalty under section 502(i) is $500 (five percent of $10,000).

(ii) An employee benefit plan executes a four year lease with a party in interest at an annual rental of $10,000 (which is the fair rental value of the property). The amount involved in each year of that transaction, as determined under 26 CFR 53.4941(e)–1(b), is $10,000. The amount of the initial sanction under ERISA section 502(i) would be a total of $5,000: $2,000 ($10,000 × 5% × 4 with respect to the rentals paid in the first year of the lease); $1,500 ($10,000 × 5% × 3 with respect to the second year); $1,000 ($10,000 × 5% × 2 with respect to the third year); $500 ($10,000 × 5% × 1 with respect to the fourth year).

(f) *Cross reference.* See §§ 2570.1–2570.12 of this chapter for procedural rules relating to section 502(i) penalty proceedings.

[53 FR 37476, Sept. 26, 1988]

§ 2560.503–1 Claims procedure.

(a) *Scope and purpose.* In accordance with the authority of sections 503 and 505 of the Employee Retirement Income Security Act of 1974 (ERISA or the Act), 29 U.S.C. 1133, 1135, this section sets forth minimum requirements for employee benefit plan procedures pertaining to claims for benefits by participants and beneficiaries (hereinafter referred to as claimants). Except as otherwise specifically provided in this section, these requirements apply to every employee benefit plan described in section 4(a) and not exempted under section 4(b) of the Act.

(b) *Obligation to establish and maintain reasonable claims procedures.* Every employee benefit plan shall establish and maintain reasonable procedures governing the filing of benefit claims, notification of benefit determinations, and appeal of adverse benefit determinations (hereinafter collectively referred to as claims procedures). The claims procedures for a plan will be deemed to be reasonable only if—

(1) The claims procedures comply with the requirements of paragraphs (c), (d), (e), (f), (g), (h), (i), and (j) of this section, as appropriate, except to the extent that the claims procedures are deemed to comply with some or all of such provisions pursuant to paragraph (b)(6) of this section;

(2) A description of all claims procedures (including, in the case of a group health plan within the meaning of paragraph (m)(6) of this section, any procedures for obtaining prior approval as a prerequisite for obtaining a benefit, such as preauthorization procedures or utilization review procedures) and the applicable time frames is included as part of a summary plan description meeting the requirements of 29 CFR 2520.102–3;

(3) The claims procedures do not contain any provision, and are not administered in a way, that unduly inhibits or hampers the initiation or processing of claims for benefits. For example, a provision or practice that requires payment of a fee or costs as a condition to making a claim or to appealing an adverse benefit determination would be considered to unduly inhibit the initiation and processing of claims for benefits. Also, the denial of a claim for failure to obtain a prior approval under circumstances that would make obtaining such prior approval impossible or where application of the prior approval process could seriously jeopardize the life or health of the claimant (e.g., in the case of a group health plan, the claimant is unconscious and in need of immediate care at the time medical treatment is required) would

constitute a practice that unduly inhibits the initiation and processing of a claim;

(4) The claims procedures do not preclude an authorized representative of a claimant from acting on behalf of such claimant in pursuing a benefit claim or appeal of an adverse benefit determination. Nevertheless, a plan may establish reasonable procedures for determining whether an individual has been authorized to act on behalf of a claimant, provided that, in the case of a claim involving urgent care, within the meaning of paragraph (m)(1) of this section, a health care professional, within the meaning of paragraph (m)(7) of this section, with knowledge of a claimant's medical condition shall be permitted to act as the authorized representative of the claimant; and

(5) The claims procedures contain administrative processes and safeguards designed to ensure and to verify that benefit claim determinations are made in accordance with governing plan documents and that, where appropriate, the plan provisions have been applied consistently with respect to similarly situated claimants.

(6) In the case of a plan established and maintained pursuant to a collective bargaining agreement (other than a plan subject to the provisions of section 302(c)(5) of the Labor Management Relations Act, 1947 concerning joint representation on the board of trustees)—

(i) Such plan will be deemed to comply with the provisions of paragraphs (c) through (j) of this section if the collective bargaining agreement pursuant to which the plan is established or maintained sets forth or incorporates by specific reference—

(A) Provisions concerning the filing of benefit claims and the initial disposition of benefit claims, and

(B) A grievance and arbitration procedure to which adverse benefit determinations are subject.

(ii) Such plan will be deemed to comply with the provisions of paragraphs (h), (i), and (j) of this section (but will not be deemed to comply with paragraphs (c) through (g) of this section) if the collective bargaining agreement pursuant to which the plan is established or maintained sets forth or incorporates by specific reference a grievance and arbitration procedure to which adverse benefit determinations are subject (but not provisions concerning the filing and initial disposition of benefit claims).

(c) *Group health plans.* The claims procedures of a group health plan will be deemed to be reasonable only if, in addition to complying with the requirements of paragraph (b) of this section—

(1)(i) The claims procedures provide that, in the case of a failure by a claimant or an authorized representative of a claimant to follow the plan's procedures for filing a pre-service claim, within the meaning of paragraph (m)(2) of this section, the claimant or representative shall be notified of the failure and the proper procedures to be followed in filing a claim for benefits. This notification shall be provided to the claimant or authorized representative, as appropriate, as soon as possible, but not later than 5 days (24 hours in the case of a failure to file a claim involving urgent care) following the failure. Notification may be oral, unless written notification is requested by the claimant or authorized representative.

(ii) Paragraph (c)(1)(i) of this section shall apply only in the case of a failure that—

(A) Is a communication by a claimant or an authorized representative of a claimant that is received by a person or organizational unit customarily responsible for handling benefit matters; and

(B) Is a communication that names a specific claimant; a specific medical condition or symptom; and a specific treatment, service, or product for which approval is requested.

(2) The claims procedures do not contain any provision, and are not administered in a way, that requires a claimant to file more than two appeals of an adverse benefit determination prior to bringing a civil action under section 502(a) of the Act;

(3) To the extent that a plan offers voluntary levels of appeal (except to the extent that the plan is required to do so by State law), including voluntary arbitration or any other form of dispute resolution, in addition to those

permitted by paragraph (c)(2) of this section, the claims procedures provide that:

(i) The plan waives any right to assert that a claimant has failed to exhaust administrative remedies because the claimant did not elect to submit a benefit dispute to any such voluntary level of appeal provided by the plan;

(ii) The plan agrees that any statute of limitations or other defense based on timeliness is tolled during the time that any such voluntary appeal is pending;

(iii) The claims procedures provide that a claimant may elect to submit a benefit dispute to such voluntary level of appeal only after exhaustion of the appeals permitted by paragraph (c)(2) of this section;

(iv) The plan provides to any claimant, upon request, sufficient information relating to the voluntary level of appeal to enable the claimant to make an informed judgment about whether to submit a benefit dispute to the voluntary level of appeal, including a statement that the decision of a claimant as to whether or not to submit a benefit dispute to the voluntary level of appeal will have no effect on the claimant's rights to any other benefits under the plan and information about the applicable rules, the claimant's right to representation, the process for selecting the decisionmaker, and the circumstances, if any, that may affect the impartiality of the decisionmaker, such as any financial or personal interests in the result or any past or present relationship with any party to the review process; and

(v) No fees or costs are imposed on the claimant as part of the voluntary level of appeal.

(4) The claims procedures do not contain any provision for the mandatory arbitration of adverse benefit determinations, except to the extent that the plan or procedures provide that:

(i) The arbitration is conducted as one of the two appeals described in paragraph (c)(2) of this section and in accordance with the requirements applicable to such appeals; and

(ii) The claimant is not precluded from challenging the decision under section 502(a) of the Act or other applicable law.

(d) *Plans providing disability benefits.* The claims procedures of a plan that provides disability benefits will be deemed to be reasonable only if the claims procedures comply, with respect to claims for disability benefits, with the requirements of paragraphs (b), (c)(2), (c)(3), and (c)(4) of this section.

(e) *Claim for benefits.* For purposes of this section, a claim for benefits is a request for a plan benefit or benefits made by a claimant in accordance with a plan's reasonable procedure for filing benefit claims. In the case of a group health plan, a claim for benefits includes any pre-service claims within the meaning of paragraph (m)(2) of this section and any post-service claims within the meaning of paragraph (m)(3) of this section.

(f) *Timing of notification of benefit determination*—(1) *In general.* Except as provided in paragraphs (f)(2) and (f)(3) of this section, if a claim is wholly or partially denied, the plan administrator shall notify the claimant, in accordance with paragraph (g) of this section, of the plan's adverse benefit determination within a reasonable period of time, but not later than 90 days after receipt of the claim by the plan, unless the plan administrator determines that special circumstances require an extension of time for processing the claim. If the plan administrator determines that an extension of time for processing is required, written notice of the extension shall be furnished to the claimant prior to the termination of the initial 90-day period. In no event shall such extension exceed a period of 90 days from the end of such initial period. The extension notice shall indicate the special circumstances requiring an extension of time and the date by which the plan expects to render the benefit determination.

(2) *Group health plans.* In the case of a group health plan, the plan administrator shall notify a claimant of the plan's benefit determination in accordance with paragraph (f)(2)(i), (f)(2)(ii), or (f)(2)(iii) of this section, as appropriate.

(i) *Urgent care claims.* In the case of a claim involving urgent care, the plan administrator shall notify the claimant of the plan's benefit determination (whether adverse or not) as soon as

possible, taking into account the medical exigencies, but not later than 72 hours after receipt of the claim by the plan, unless the claimant fails to provide sufficient information to determine whether, or to what extent, benefits are covered or payable under the plan. In the case of such a failure, the plan administrator shall notify the claimant as soon as possible, but not later than 24 hours after receipt of the claim by the plan, of the specific information necessary to complete the claim. The claimant shall be afforded a reasonable amount of time, taking into account the circumstances, but not less than 48 hours, to provide the specified information. Notification of any adverse benefit determination pursuant to this paragraph (f)(2)(i) shall be made in accordance with paragraph (g) of this section. The plan administrator shall notify the claimant of the plan's benefit determination as soon as possible, but in no case later than 48 hours after the earlier of—

(A) The plan's receipt of the specified information, or

(B) The end of the period afforded the claimant to provide the specified additional information.

(ii) *Concurrent care decisions.* If a group health plan has approved an ongoing course of treatment to be provided over a period of time or number of treatments—

(A) Any reduction or termination by the plan of such course of treatment (other than by plan amendment or termination) before the end of such period of time or number of treatments shall constitute an adverse benefit determination. The plan administrator shall notify the claimant, in accordance with paragraph (g) of this section, of the adverse benefit determination at a time sufficiently in advance of the reduction or termination to allow the claimant to appeal and obtain a determination on review of that adverse benefit determination before the benefit is reduced or terminated.

(B) Any request by a claimant to extend the course of treatment beyond the period of time or number of treatments that is a claim involving urgent care shall be decided as soon as possible, taking into account the medical exigencies, and the plan administrator shall notify the claimant of the benefit determination, whether adverse or not, within 24 hours after receipt of the claim by the plan, provided that any such claim is made to the plan at least 24 hours prior to the expiration of the prescribed period of time or number of treatments. Notification of any adverse benefit determination concerning a request to extend the course of treatment, whether involving urgent care or not, shall be made in accordance with paragraph (g) of this section, and appeal shall be governed by paragraph (i)(2)(i), (i)(2)(ii), or (i)(2)(iii), as appropriate.

(iii) *Other claims.* In the case of a claim not described in paragraphs (f)(2)(i) or (f)(2)(ii) of this section, the plan administrator shall notify the claimant of the plan's benefit determination in accordance with either paragraph (f)(2)(iii)(A) or (f)(2)(iii)(B) of this section, as appropriate.

(A) *Pre-service claims.* In the case of a pre-service claim, the plan administrator shall notify the claimant of the plan's benefit determination (whether adverse or not) within a reasonable period of time appropriate to the medical circumstances, but not later than 15 days after receipt of the claim by the plan. This period may be extended one time by the plan for up to 15 days, provided that the plan administrator both determines that such an extension is necessary due to matters beyond the control of the plan and notifies the claimant, prior to the expiration of the initial 15-day period, of the circumstances requiring the extension of time and the date by which the plan expects to render a decision. If such an extension is necessary due to a failure of the claimant to submit the information necessary to decide the claim, the notice of extension shall specifically describe the required information, and the claimant shall be afforded at least 45 days from receipt of the notice within which to provide the specified information. Notification of any adverse benefit determination pursuant to this paragraph (f)(2)(iii)(A) shall be made in accordance with paragraph (g) of this section.

(B) *Post-service claims.* In the case of a post-service claim, the plan administrator shall notify the claimant, in accordance with paragraph (g) of this section, of the plan's adverse benefit determination within a reasonable period of time, but not later than 30 days after receipt of the claim. This period may be extended one time by the plan for up to 15 days, provided that the plan administrator both determines that such an extension is necessary due to matters beyond the control of the plan and notifies the claimant, prior to the expiration of the initial 30-day period, of the circumstances requiring the extension of time and the date by which the plan expects to render a decision. If such an extension is necessary due to a failure of the claimant to submit the information necessary to decide the claim, the notice of extension shall specifically describe the required information, and the claimant shall be afforded at least 45 days from receipt of the notice within which to provide the specified information.

(3) *Disability claims.* In the case of a claim for disability benefits, the plan administrator shall notify the claimant, in accordance with paragraph (g) of this section, of the plan's adverse benefit determination within a reasonable period of time, but not later than 45 days after receipt of the claim by the plan. This period may be extended by the plan for up to 30 days, provided that the plan administrator both determines that such an extension is necessary due to matters beyond the control of the plan and notifies the claimant, prior to the expiration of the initial 45-day period, of the circumstances requiring the extension of time and the date by which the plan expects to render a decision. If, prior to the end of the first 30-day extension period, the administrator determines that, due to matters beyond the control of the plan, a decision cannot be rendered within that extension period, the period for making the determination may be extended for up to an additional 30 days, provided that the plan administrator notifies the claimant, prior to the expiration of the first 30-day extension period, of the circumstances requiring the extension and the date as of which the plan expects to render a decision. In the case of any extension under this paragraph (f)(3), the notice of extension shall specifically explain the standards on which entitlement to a benefit is based, the unresolved issues that prevent a decision on the claim, and the additional information needed to resolve those issues, and the claimant shall be afforded at least 45 days within which to provide the specified information.

(4) *Calculating time periods.* For purposes of paragraph (f) of this section, the period of time within which a benefit determination is required to be made shall begin at the time a claim is filed in accordance with the reasonable procedures of a plan, without regard to whether all the information necessary to make a benefit determination accompanies the filing. In the event that a period of time is extended as permitted pursuant to paragraph (f)(2)(iii) or (f)(3) of this section due to a claimant's failure to submit information necessary to decide a claim, the period for making the benefit determination shall be tolled from the date on which the notification of the extension is sent to the claimant until the date on which the claimant responds to the request for additional information.

(g) *Manner and content of notification of benefit determination.* (1) Except as provided in paragraph (g)(2) of this section, the plan administrator shall provide a claimant with written or electronic notification of any adverse benefit determination. Any electronic notification shall comply with the standards imposed by 29 CFR 2520.104b–1(c)(1)(i), (iii), and (iv). The notification shall set forth, in a manner calculated to be understood by the claimant—

(i) The specific reason or reasons for the adverse determination;

(ii) Reference to the specific plan provisions on which the determination is based;

(iii) A description of any additional material or information necessary for the claimant to perfect the claim and an explanation of why such material or information is necessary;

(iv) A description of the plan's review procedures and the time limits applicable to such procedures, including a statement of the claimant's right to bring a civil action under section 502(a)

of the Act following an adverse benefit determination on review;

(v) In the case of an adverse benefit determination by a group health plan or a plan providing disability benefits,

(A) If an internal rule, guideline, protocol, or other similar criterion was relied upon in making the adverse determination, either the specific rule, guideline, protocol, or other similar criterion; or a statement that such a rule, guideline, protocol, or other similar criterion was relied upon in making the adverse determination and that a copy of such rule, guideline, protocol, or other criterion will be provided free of charge to the claimant upon request; or

(B) If the adverse benefit determination is based on a medical necessity or experimental treatment or similar exclusion or limit, either an explanation of the scientific or clinical judgment for the determination, applying the terms of the plan to the claimant's medical circumstances, or a statement that such explanation will be provided free of charge upon request.

(vi) In the case of an adverse benefit determination by a group health plan concerning a claim involving urgent care, a description of the expedited review process applicable to such claims.

(2) In the case of an adverse benefit determination by a group health plan concerning a claim involving urgent care, the information described in paragraph (g)(1) of this section may be provided to the claimant orally within the time frame prescribed in paragraph (f)(2)(i) of this section, provided that a written or electronic notification in accordance with paragraph (g)(1) of this section is furnished to the claimant not later than 3 days after the oral notification.

(h) *Appeal of adverse benefit determinations*—(1) *In general*. Every employee benefit plan shall establish and maintain a procedure by which a claimant shall have a reasonable opportunity to appeal an adverse benefit determination to an appropriate named fiduciary of the plan, and under which there will be a full and fair review of the claim and the adverse benefit determination.

(2) *Full and fair review*. Except as provided in paragraphs (h)(3) and (h)(4) of this section, the claims procedures of a plan will not be deemed to provide a claimant with a reasonable opportunity for a full and fair review of a claim and adverse benefit determination unless the claims procedures—

(i) Provide claimants at least 60 days following receipt of a notification of an adverse benefit determination within which to appeal the determination;

(ii) Provide claimants the opportunity to submit written comments, documents, records, and other information relating to the claim for benefits;

(iii) Provide that a claimant shall be provided, upon request and free of charge, reasonable access to, and copies of, all documents, records, and other information relevant to the claimant's claim for benefits. Whether a document, record, or other information is relevant to a claim for benefits shall be determined by reference to paragraph (m)(8) of this section;

(iv) Provide for a review that takes into account all comments, documents, records, and other information submitted by the claimant relating to the claim, without regard to whether such information was submitted or considered in the initial benefit determination.

(3) *Group health plans*. The claims procedures of a group health plan will not be deemed to provide a claimant with a reasonable opportunity for a full and fair review of a claim and adverse benefit determination unless, in addition to complying with the requirements of paragraphs (h)(2)(ii) through (iv) of this section, the claims procedures—

(i) Provide claimants at least 180 days following receipt of a notification of an adverse benefit determination within which to appeal the determination;

(ii) Provide for a review that does not afford deference to the initial adverse benefit determination and that is conducted by an appropriate named fiduciary of the plan who is neither the individual who made the adverse benefit determination that is the subject of the appeal, nor the subordinate of such individual;

(iii) Provide that, in deciding an appeal of any adverse benefit determination that is based in whole or in part

on a medical judgment, including determinations with regard to whether a particular treatment, drug, or other item is experimental, investigational, or not medically necessary or appropriate, the appropriate named fiduciary shall consult with a health care professional who has appropriate training and experience in the field of medicine involved in the medical judgment;

(iv) Provide for the identification of medical or vocational experts whose advice was obtained on behalf of the plan in connection with a claimant's adverse benefit determination, without regard to whether the advice was relied upon in making the benefit determination;

(v) Provide that the health care professional engaged for purposes of a consultation under paragraph (h)(3)(iii) of this section shall be an individual who is neither an individual who was consulted in connection with the adverse benefit determination that is the subject of the appeal, nor the subordinate of any such individual; and

(vi) Provide, in the case of a claim involving urgent care, for an expedited review process pursuant to which—

(A) A request for an expedited appeal of an adverse benefit determination may be submitted orally or in writing by the claimant; and

(B) All necessary information, including the plan's benefit determination on review, shall be transmitted between the plan and the claimant by telephone, facsimile, or other available similarly expeditious method.

(4) *Plans providing disability benefits.* The claims procedures of a plan providing disability benefits will not, with respect to claims for such benefits, be deemed to provide a claimant with a reasonable opportunity for a full and fair review of a claim and adverse benefit determination unless the claims procedures comply with the requirements of paragraphs (h)(2)(ii) through (iv) and (h)(3)(i) through (v) of this section.

(i) *Timing of notification of benefit determination on review*—(1) *In general.* (i) Except as provided in paragraphs (i)(1)(ii), (i)(2), and (i)(3) of this section, the plan administrator shall notify a claimant in accordance with paragraph (j) of this section of the plan's benefit determination on review within a reasonable period of time, but not later than 60 days after receipt of the claimant's request for review by the plan, unless the plan administrator determines that special circumstances (such as the need to hold a hearing, if the plan's procedures provide for a hearing) require an extension of time for processing the claim. If the plan administrator determines that an extension of time for processing is required, written notice of the extension shall be furnished to the claimant prior to the termination of the initial 60-day period. In no event shall such extension exceed a period of 60 days from the end of the initial period. The extension notice shall indicate the special circumstances requiring an extension of time and the date by which the plan expects to render the determination on review.

(ii) In the case of a plan with a committee or board of trustees designated as the appropriate named fiduciary that holds regularly scheduled meetings at least quarterly, paragraph (i)(1)(i) of this section shall not apply, and, except as provided in paragraphs (i)(2) and (i)(3) of this section, the appropriate named fiduciary shall instead make a benefit determination no later than the date of the meeting of the committee or board that immediately follows the plan's receipt of a request for review, unless the request for review is filed within 30 days preceding the date of such meeting. In such case, a benefit determination may be made by no later than the date of the second meeting following the plan's receipt of the request for review. If special circumstances (such as the need to hold a hearing, if the plan's procedures provide for a hearing) require a further extension of time for processing, a benefit determination shall be rendered not later than the third meeting of the committee or board following the plan's receipt of the request for review. If such an extension of time for review is required because of special circumstances, the plan administrator shall provide the claimant with written notice of the extension, describing the special circumstances and the date as of which the benefit determination will be made, prior to the commencement

of the extension. The plan administrator shall notify the claimant, in accordance with paragraph (j) of this section, of the benefit determination as soon as possible, but not later than 5 days after the benefit determination is made.

(2) *Group health plans.* In the case of a group health plan, the plan administrator shall notify a claimant of the plan's benefit determination on review in accordance with paragraphs (i)(2)(i) through (iii), as appropriate.

(i) *Urgent care claims.* In the case of a claim involving urgent care, the plan administrator shall notify the claimant, in accordance with paragraph (j) of this section, of the plan's benefit determination on review as soon as possible, taking into account the medical exigencies, but not later than 72 hours after receipt of the claimant's request for review of an adverse benefit determination by the plan.

(ii) *Pre-service claims.* In the case of a pre-service claim, the plan administrator shall notify the claimant, in accordance with paragraph (j) of this section, of the plan's benefit determination on review within a reasonable period of time appropriate to the medical circumstances. In the case of a group health plan that provides for one appeal of an adverse benefit determination, such notification shall be provided not later than 30 days after receipt by the plan of the claimant's request for review of an adverse benefit determination. In the case of a group health plan that provides for two appeals of an adverse determination, such notification shall be provided, with respect to any one of such two appeals, not later than 15 days after receipt by the plan of the claimant's request for review of the adverse determination.

(iii) *Post-service claims.* (A) In the case of a post-service claim, except as provided in paragraph (i)(2)(iii)(B) of this section, the plan administrator shall notify the claimant, in accordance with paragraph (j) of this section, of the plan's benefit determination on review within a reasonable period of time. In the case of a group health plan that provides for one appeal of an adverse benefit determination, such notification shall be provided not later than 60 days after receipt by the plan of the claimant's request for review of an adverse benefit determination. In the case of a group health plan that provides for two appeals of an adverse determination, such notification shall be provided, with respect to any one of such two appeals, not later than 30 days after receipt by the plan of the claimant's request for review of the adverse determination.

(B) In the case of a multiemployer plan with a committee or board of trustees designated as the appropriate named fiduciary that holds regularly scheduled meetings at least quarterly, paragraph (i)(2)(iii)(A) of this section shall not apply, and the appropriate named fiduciary shall instead make a benefit determination no later than the date of the meeting of the committee or board that immediately follows the plan's receipt of a request for review, unless the request for review is filed within 30 days preceding the date of such meeting. In such case, a benefit determination may be made by no later than the date of the second meeting following the plan's receipt of the request for review. If special circumstances (such as the need to hold a hearing, if the plan's procedures provide for a hearing) require a further extension of time for processing, a benefit determination shall be rendered not later than the third meeting of the committee or board following the plan's receipt of the request for review. If such an extension of time for review is required because of special circumstances, the plan administrator shall notify the claimant in writing of the extension, describing the special circumstances and the date as of which the benefit determination will be made, prior to the commencement of the extension. The plan administrator shall notify the claimant, in accordance with paragraph (j) of this section, of the benefit determination as soon as possible, but not later than 5 days after the benefit determination is made.

(3) *Disability claims.* (i) Except as provided in paragraph (i)(3)(ii) of this section, claims involving disability benefits (whether the plan provides for one or two appeals) shall be governed by paragraph (i)(1) of this section, except

that a period of 45 days shall apply instead of 60 days for purposes of that paragraph.

(ii) In the case of a multiemployer plan with a committee or board of trustees designated as the appropriate named fiduciary that holds regularly scheduled meetings at least quarterly, paragraph (i)(3)(i) of this section shall not apply, and the appropriate named fiduciary shall instead make a benefit determination no later than the date of the meeting of the committee or board that immediately follows the plan's receipt of a request for review, unless the request for review is filed within 30 days preceding the date of such meeting. In such case, a benefit determination may be made by no later than the date of the second meeting following the plan's receipt of the request for review. If special circumstances (such as the need to hold a hearing, if the plan's procedures provide for a hearing) require a further extension of time for processing, a benefit determination shall be rendered not later than the third meeting of the committee or board following the plan's receipt of the request for review. If such an extension of time for review is required because of special circumstances, the plan administrator shall notify the claimant in writing of the extension, describing the special circumstances and the date as of which the benefit determination will be made, prior to the commencement of the extension. The plan administrator shall notify the claimant, in accordance with paragraph (j) of this section, of the benefit determination as soon as possible, but not later than 5 days after the benefit determination is made.

(4) *Calculating time periods.* For purposes of paragraph (i) of this section, the period of time within which a benefit determination on review is required to be made shall begin at the time an appeal is filed in accordance with the reasonable procedures of a plan, without regard to whether all the information necessary to make a benefit determination on review accompanies the filing. In the event that a period of time is extended as permitted pursuant to paragraph (i)(1), (i)(2)(iii)(B), or (i)(3) of this section due to a claimant's failure to submit information necessary to decide a claim, the period for making the benefit determination on review shall be tolled from the date on which the notification of the extension is sent to the claimant until the date on which the claimant responds to the request for additional information.

(5) *Furnishing documents.* In the case of an adverse benefit determination on review, the plan administrator shall provide such access to, and copies of, documents, records, and other information described in paragraphs (j)(3), (j)(4), and (j)(5) of this section as is appropriate.

(j) *Manner and content of notification of benefit determination on review.* The plan administrator shall provide a claimant with written or electronic notification of a plan's benefit determination on review. Any electronic notification shall comply with the standards imposed by 29 CFR 2520.104b–1(c)(1)(i), (iii), and (iv). In the case of an adverse benefit determination, the notification shall set forth, in a manner calculated to be understood by the claimant—

(1) The specific reason or reasons for the adverse determination;

(2) Reference to the specific plan provisions on which the benefit determination is based;

(3) A statement that the claimant is entitled to receive, upon request and free of charge, reasonable access to, and copies of, all documents, records, and other information relevant to the claimant's claim for benefits. Whether a document, record, or other information is relevant to a claim for benefits shall be determined by reference to paragraph (m)(8) of this section;

(4) A statement describing any voluntary appeal procedures offered by the plan and the claimant's right to obtain the information about such procedures described in paragraph (c)(3)(iv) of this section, and a statement of the claimant's right to bring an action under section 502(a) of the Act; and

(5) In the case of a group health plan or a plan providing disability benefits—

(i) If an internal rule, guideline, protocol, or other similar criterion was relied upon in making the adverse determination, either the specific rule, guideline, protocol, or other similar criterion; or a statement that such

rule, guideline, protocol, or other similar criterion was relied upon in making the adverse determination and that a copy of the rule, guideline, protocol, or other similar criterion will be provided free of charge to the claimant upon request;

(ii) If the adverse benefit determination is based on a medical necessity or experimental treatment or similar exclusion or limit, either an explanation of the scientific or clinical judgment for the determination, applying the terms of the plan to the claimant's medical circumstances, or a statement that such explanation will be provided free of charge upon request; and

(iii) The following statement: ''You and your plan may have other voluntary alternative dispute resolution options, such as mediation. One way to find out what may be available is to contact your local U.S. Department of Labor Office and your State insurance regulatory agency.''

(k) *Preemption of State law.* (1) Nothing in this section shall be construed to supersede any provision of State law that regulates insurance, except to the extent that such law prevents the application of a requirement of this section.

(2)(i) For purposes of paragraph (k)(1) of this section, a State law regulating insurance shall not be considered to prevent the application of a requirement of this section merely because such State law establishes a review procedure to evaluate and resolve disputes involving adverse benefit determinations under group health plans so long as the review procedure is conducted by a person or entity other than the insurer, the plan, plan fiduciaries, the employer, or any employee or agent of any of the foregoing.

(ii) The State law procedures described in paragraph (k)(2)(i) of this section are not part of the full and fair review required by section 503 of the Act. Claimants therefore need not exhaust such State law procedures prior to bringing suit under section 502(a) of the Act.

(l) *Failure to establish and follow reasonable claims procedures.* In the case of the failure of a plan to establish or follow claims procedures consistent with the requirements of this section, a claimant shall be deemed to have exhausted the administrative remedies available under the plan and shall be entitled to pursue any available remedies under section 502(a) of the Act on the basis that the plan has failed to provide a reasonable claims procedure that would yield a decision on the merits of the claim.

(m) *Definitions.* The following terms shall have the meaning ascribed to such terms in this paragraph (m) whenever such term is used in this section:

(1)(i) A ''claim involving urgent care'' is any claim for medical care or treatment with respect to which the application of the time periods for making non-urgent care determinations—

(A) Could seriously jeopardize the life or health of the claimant or the ability of the claimant to regain maximum function, or,

(B) In the opinion of a physician with knowledge of the claimant's medical condition, would subject the claimant to severe pain that cannot be adequately managed without the care or treatment that is the subject of the claim.

(ii) Except as provided in paragraph (m)(1)(iii) of this section, whether a claim is a ''claim involving urgent care'' within the meaning of paragraph (m)(1)(i)(A) of this section is to be determined by an individual acting on behalf of the plan applying the judgment of a prudent layperson who possesses an average knowledge of health and medicine.

(iii) Any claim that a physician with knowledge of the claimant's medical condition determines is a ''claim involving urgent care'' within the meaning of paragraph (m)(1)(i) of this section shall be treated as a ''claim involving urgent care'' for purposes of this section.

(2) The term ''pre-service claim'' means any claim for a benefit under a group health plan with respect to which the terms of the plan condition receipt of the benefit, in whole or in part, on approval of the benefit in advance of obtaining medical care.

(3) The term ''post-service claim'' means any claim for a benefit under a group health plan that is not a pre-

service claim within the meaning of paragraph (m)(2) of this section.

(4) The term ''adverse benefit determination'' means any of the following: a denial, reduction, or termination of, or a failure to provide or make payment (in whole or in part) for, a benefit, including any such denial, reduction, termination, or failure to provide or make payment that is based on a determination of a participant's or beneficiary's eligibility to participate in a plan, and including, with respect to group health plans, a denial, reduction, or termination of, or a failure to provide or make payment (in whole or in part) for, a benefit resulting from the application of any utilization review, as well as a failure to cover an item or service for which benefits are otherwise provided because it is determined to be experimental or investigational or not medically necessary or appropriate.

(5) The term ''notice'' or ''notification'' means the delivery or furnishing of information to an individual in a manner that satisfies the standards of 29 CFR 2520.104b–1(b) as appropriate with respect to material required to be furnished or made available to an individual.

(6) The term ''group health plan'' means an employee welfare benefit plan within the meaning of section 3(1) of the Act to the extent that such plan provides ''medical care'' within the meaning of section 733(a) of the Act.

(7) The term ''health care professional'' means a physician or other health care professional licensed, accredited, or certified to perform specified health services consistent with State law.

(8) A document, record, or other information shall be considered ''relevant'' to a claimant's claim if such document, record, or other information

(i) Was relied upon in making the benefit determination;

(ii) Was submitted, considered, or generated in the course of making the benefit determination, without regard to whether such document, record, or other information was relied upon in making the benefit determination;

(iii) Demonstrates compliance with the administrative processes and safeguards required pursuant to paragraph (b)(5) of this section in making the benefit determination; or

(iv) In the case of a group health plan or a plan providing disability benefits, constitutes a statement of policy or guidance with respect to the plan concerning the denied treatment option or benefit for the claimant's diagnosis, without regard to whether such advice or statement was relied upon in making the benefit determination.

(n) *Apprenticeship plans.* This section does not apply to employee benefit plans that solely provide apprenticeship training benefits.

(o) *Applicability dates.* (1) Except as provided in paragraph (o)(2) of this section, this section shall apply to claims filed under a plan on or after January 1, 2002.

(2) This section shall apply to claims filed under a group health plan on or after the first day of the first plan year beginning on or after July 1, 2002, but in no event later than January 1, 2003.

[65 FR 70265, Nov. 21, 2000, as amended at 66 FR 35887, July 9, 2001]

§ 2560.521–1 Cease and desist and seizure orders under section 521.

(a) *Purpose.* Section 521(a) of the Employee Retirement Income Security Act of 1974 (ERISA), 29 U.S.C. 1151(a), authorizes the Secretary of Labor to issue an ex parte cease and desist order if it appears to the Secretary that the alleged conduct of a multiple employer welfare arrangement (MEWA) under section 3(40) of ERISA is fraudulent, or creates an immediate danger to the public safety or welfare, or is causing or can be reasonably expected to cause significant, imminent, and irreparable public injury. Section 521(e) of ERISA authorizes the Secretary to issue a summary seizure order if it appears that a MEWA is in a financially hazardous condition. An order may apply to a MEWA or to persons having custody or control of assets of the subject MEWA, any authority over management of the subject MEWA, or any role in the transaction of the subject MEWA's business. This section sets forth standards and procedures for the Secretary to issue ex parte cease and desist and summary seizure orders and for administrative review of the

issuance of such cease and desist orders.

(b) Definitions. When used in this section, the following terms shall have the meanings ascribed in this paragraph (b).

(1) *Multiple employer welfare arrangement* (MEWA) is an arrangement as defined in section 3(40) of ERISA that either is an employee welfare benefit plan subject to Title I of ERISA or offers benefits in connection with one or more employee welfare benefit plans subject to Title I of ERISA. For purposes of section 521 of ERISA, a MEWA does not include a health insurance issuer (including a health maintenance organization) that is licensed to offer or provide health insurance coverage to the public and employers at large in each State in which it offers or provides health insurance coverage, and that, in each such State, is subject to comprehensive licensure, solvency, and examination requirements that the State customarily requires for issuing health insurance policies to the public and employers at large. The term health insurance issuer does not include group health plans. For purposes of this section, the term ''health insurance coverage'' has the same meaning as in ERISA section 733(b)(1).

(2) *The conduct of a MEWA is fraudulent:*

(i) When the MEWA or any person acting as an agent or employee of the MEWA commits an act or omission knowingly and with an intent to deceive or defraud plan participants, plan beneficiaries, employers or employee organizations, or other members of the public, the Secretary, or a State regarding:

(A) The financial condition of the MEWA (including the MEWA's solvency and the management of plan assets);

(B) The benefits provided by or in connection with the MEWA;

(C) The management, control, or administration of the MEWA;

(D) The existing or lawful regulatory status of the MEWA under Federal or State law; or,

(E) Any other material fact, as determined by the Secretary, relating to the MEWA or its operation.

(ii) Fraudulent conduct includes any false statement regarding any of paragraphs (b)(2)(i)(A) through (b)(2)(i)(E) of this section that is made with knowledge of its falsity or that is made with reckless indifference to the statement's truth or falsity, and the knowing concealment of material information regarding any of paragraphs (b)(2)(i)(A) through (b)(2)(i)(E) of this section. Examples of fraudulent conduct include, but are not limited to, misrepresenting the terms of the benefits offered by or in connection with the MEWA or the financial condition of the MEWA or engaging in deceptive acts or omissions in connection with marketing or sales or fees charged to employers or employee organizations.

(3) *The conduct of a MEWA creates an immediate danger to the public safety or welfare* if the conduct of a MEWA or any person acting as an agent or employee of the MEWA impairs, or threatens to impair, a MEWA's ability to pay claims or otherwise unreasonably increases the risk of nonpayment of benefits. Intent to create an immediate danger is not required for this criterion. Examples of such conduct include, but are not limited to, a systematic failure to properly process or pay benefit claims, including failure to establish and maintain a claims procedure that complies with the Secretary's claims procedure regulations (29 CFR 2560.503–1 and 29 CFR 2590.715–2719), failure to establish or maintain a recordkeeping system that tracks the claims made, paid, or processed or the MEWA's financial condition, a substantial failure to meet applicable disclosure, reporting, and other filing requirements, including the annual reporting and registration requirements under sections 101(g) and 104 of ERISA, failure to establish and implement a policy or method to determine that the MEWA is actuarially sound with appropriate reserves and adequate underwriting, failure to comply with a cease and desist order issued by a government agency or court, and failure to hold plan assets in trust.

(4) *The conduct of a MEWA is causing or can be reasonably expected to cause significant, imminent, and irreparable public injury:*

(i) If the conduct of a MEWA, or of a person acting as an agent or employee of the MEWA, is having, or is reasonably expected to have, a significant and imminent negative effect on one or more of the following:

(A) An employee welfare benefit plan that is, or offers benefits in connection with, a MEWA;

(B) The sponsor of such plan or the employer or employee organization that makes payments for benefits provided by or in connection with a MEWA; or

(C) Plan participants and plan beneficiaries; and

(ii) If it is not reasonable to expect that such effect will be fully repaired or rectified.

Intent to cause injury is not required for this criterion. Examples of such conduct include, but are not limited to, conversion or concealment of property of the MEWA; improper disposal, transfer, or removal of funds or other property of the MEWA, including unreasonable compensation or payments to MEWA operators and service providers (e.g. brokers, marketers, and third party administrators); employment by the MEWA of a person prohibited from such employment pursuant to section 411 of ERISA, and embezzlement from the MEWA. For purposes of section 521 of ERISA, compensation that would be excessive under 26 CFR 1.162–7 will be considered unreasonable compensation or payments for purposes of this regulation. Depending upon the facts and circumstances, compensation may be unreasonable under this regulation even it is not excessive under 26 CFR 1.162–7.

(5) *A MEWA is in a financially hazardous condition if:*

(i) The Secretary has probable cause to believe that a MEWA:

(A) Is, or is in imminent danger of becoming, unable to pay benefit claims as they come due, or

(B) Has sustained, or is in imminent danger of sustaining, a significant loss of assets; or

(ii) A person responsible for management, control, or administration of the MEWA's assets is the subject of a cease and desist order issued by the Secretary.

(6) A *person*, for purposes of this section, is an individual, partnership, corporation, employee welfare benefit plan, association, or other entity or organization.

(c) *Temporary cease and desist order*. (1)(i) The Secretary may issue a temporary cease and desist order when the Secretary finds there is reasonable cause to believe that the conduct of a MEWA, or any person acting as an agent or employee of the MEWA, is –

(A) Fraudulent;

(B) Creates an immediate danger to the public safety or welfare; or

(C) Is causing or can be reasonably expected to cause significant, imminent, and irreparable public injury.

(ii) A single act or omission may be the basis for a temporary cease and desist order.

(2) A temporary cease and desist order, as the Secretary determines is necessary and appropriate to stop the conduct on which the order is based, and to protect the interests of plan participants, plan beneficiaries, employers or employee organizations, or other members of the public, may—

(i) Prohibit specific conduct or prohibit the transaction of any business of the MEWA;

(ii) Prohibit any person from taking specified actions, or exercising authority or control, concerning funds or property of a MEWA or of any employee benefit plan, regardless of whether such funds or property have been commingled with other funds or property; and,

(iii) Bar any person either directly or indirectly, from providing management, administrative, or other services to any MEWA or to an employee benefit plan or trust.

(3) The Secretary may require documentation from the subject of the order verifying compliance.

(d) *Effect of order on other remedies*. The issuance of a temporary or final cease and desist order shall not foreclose the Secretary from seeking additional remedies under ERISA.

(e) *Administrative hearing*. (1) A temporary cease and desist order shall become a final order as to any MEWA or other person named in the order 30 days after such person receives notice of the order unless, within this period,

such person requests a hearing in accordance with the requirements of this paragraph (e).

(2) A person requesting a hearing must file a written request and an answer to the order showing cause why the order should be modified or set aside. The request and the answer must be filed in accordance with 29 CFR part 2571 and § 18.4 of this title.

(3) A hearing shall be held expeditiously following the receipt of the request for a hearing by the Office of the Administrative Law Judges, unless the parties mutually consent, in writing, to a later date.

(4) The decision of the administrative law judge shall be issued expeditiously after the conclusion of the hearing.

(5) The Secretary must offer evidence supporting the findings made in issuing the order that there is reasonable cause to believe that the MEWA (or a person acting as an employee or agent of the MEWA) engaged in conduct specified in paragraph (c)(1) of this section.

(6) The person requesting the hearing has the burden to show that the order should be modified or set aside. To meet this burden such person must show by a preponderance of the evidence that the MEWA (or a person acting as an employee or agent of the MEWA) did not engage in conduct specified in paragraph (c)(1) of this section or must show that the requirements imposed by the order, are, in whole or part, arbitrary and capricious.

(7) Any temporary cease and desist order for which a hearing has been requested shall remain in effect and enforceable, pending completion of the administrative proceedings, unless stayed by the Secretary, an administrative law judge, or by a court.

(8) The Secretary may require that the hearing and all evidence be treated as confidential.

(f) *Summary seizure order*. (1) Subject to paragraphs (f)(2) and (3) of this section, the Secretary may issue a summary seizure order when the Secretary finds there is probable cause to believe that a MEWA is in a financially hazardous condition.

(2) Except as provided in paragraph (f)(3) of this section, the Secretary, before issuing a summary seizure order to remove assets and records from the control and management of the MEWA or any persons having custody or control of such assets or records, shall obtain judicial authorization from a federal court in the form of a warrant or other appropriate form of authorization and may at that time pursue other actions such as those set forth in paragraph (f)(5) of this section.

(3) If the Secretary reasonably believes that any delay in issuing the order is likely to result in the removal, dissipation, or concealment of plan assets or records, the Secretary may issue and serve a summary seizure order before seeking court authorization. Promptly following service of the order, the Secretary shall seek authorization from a federal court and may at that time pursue other actions such as those set forth in paragraph (f)(5) of this section.

(4) A summary seizure order may authorize the Secretary to take possession or control of all or part of the books, records, accounts, and property of the MEWA (including the premises in which the MEWA transacts its business) to protect the benefits of plan participants, plan beneficiaries, employers or employee organizations, or other members of the public, and to safeguard the assets of employee welfare benefit plans. The order may also direct any person having control and custody of the assets that are the subject of the order not to allow any transfer or disposition of such assets except upon the written direction of the Secretary, or of a receiver or independent fiduciary appointed by a court.

(5) In connection with or following the execution of a summary seizure order, the Secretary may—

(i) Secure court appointment of a receiver or independent fiduciary to perform any necessary functions of the MEWA;

(ii) Obtain court authorization for the Secretary, the receiver or independent fiduciary to take any other action to seize, secure, maintain, or preserve the availability of the MEWA's assets; and

(iii) Obtain such other appropriate relief available under ERISA to protect

the interest of employee welfare benefit plan participants, plan beneficiaries, employers or employee organizations or other members of the public. Other appropriate equitable relief may include the liquidation and winding up of the MEWA's affairs and, where applicable, the affairs of any person sponsoring the MEWA.

(g) *Effective date of orders.* Cease and desist and summary seizure orders are effective immediately upon issuance by the Secretary and shall remain effective, except to the extent and until any provision is modified or the order is set aside by the Secretary, an administrative law judge, or a court.

(h) *Service of orders.* (1) As soon as practicable after the issuance of a temporary or final cease and desist order and no later than five business days after issuance of a summary seizure order, the Secretary shall serve the order either:

(i) By delivering a copy to the person who is the subject of the order. If the person is a partnership, service may be made to any partner. If the person is a corporation, association, or other entity or organization, service may be made to any officer of such entity or any person designated for service of process under State law or the applicable plan document. If the person is an employee welfare benefit plan, service may be made to a trustee or administrator. A person's attorney may accept service on behalf of such person;

(ii) By leaving a copy at the principal office, place of business, or residence of such person or attorney; or

(iii) By mailing a copy to the last known address of such person or attorney.

(2) If service is accomplished by certified mail, service is complete upon mailing. If service is done by regular mail, service is complete upon receipt by the addressee.

(3) Service of a temporary or final cease and desist order and of a summary seizure order shall include a statement of the Secretary's findings giving rise to the order, and, where applicable, a copy of any warrant or other authorization by a court.

[78 FR 13805, Mar. 1, 2013]

§ 2560.521–2 Disclosure of order and proceedings.

(a) Notwithstanding § 2560.521–1(e)(8), the Secretary shall make available to the public final cease and desist and summary seizure orders or modifications and terminations of such final orders.

(b) Except as prohibited by applicable law, and at his or her discretion, the Secretary may disclose the issuance of a temporary cease and desist order or summary seizure order and information and evidence of any proceedings and hearings related to an order, to any Federal, State, or foreign authorities responsible for enforcing laws that apply to MEWAs and parties associated with, or providing services to, MEWAs.

(c) The sharing of such documents, material, or other information and evidence under this section does not constitute a waiver of any applicable privilege or claim of confidentiality.

[78 FR 13805, Mar. 1, 2013]

§ 2560.521–3 Effect on other enforcement authority.

The Secretary's authority under section 521 shall not be construed to limit the Secretary's ability to exercise his or her enforcement or investigatory authority under any other provision of title I of ERISA. 29 U.S.C. 1001 *et seq.* The Secretary may, in his or her sole discretion, initiate court proceedings without using the procedures in this section.

[78 FR 13805, Mar. 1, 2013]

§ 2560.521–4 Cross-reference.

See 29 CFR 2571.1 through 2571.13 for procedural rules relating to administrative hearings under section 521 of ERISA.

[78 FR 13805, Mar. 1, 2013]

PART 2570—PROCEDURAL REGULATIONS UNDER THE EMPLOYEE RETIREMENT INCOME SECURITY ACT

Subpart A—Procedures for the Assessment of Civil Sanctions Under ERISA Section 502(i)

Sec.
2570.1 Scope of rules.
2570.2 Definitions.
2570.3 Service: Copies of documents and pleadings.
2570.4 Parties.
2570.5 Consequences of default.
2570.6 Consent order or settlement.
2570.7 Scope of discovery.
2570.8 Summary decision.
2570.9 Decision of the administrative law judge.
2570.10 Review by the Secretary.
2570.11 Scope of review.
2570.12 Procedures for review by the Secretary.

Subpart B—Procedures Governing the Filing and Processing of Prohibited Transaction Exemption Applications

2570.30 Scope of rules.
2570.31 Definitions.
2570.32 Persons who may apply for exemptions.
2570.33 Applications the Department will not ordinarily consider.
2570.34 Information to be included in every exemption application.
2570.35 Information to be included in applications for individual exemptions only.
2570.36 Where to file an application.
2570.37 Duty to amend and supplement exemption applications.
2570.38 Tentative denial letters.
2570.39 Opportunities to submit additional information.
2570.40 Conferences.
2570.41 Final denial letters.
2570.42 Notice of proposed exemption.
2570.43 Notification of interested persons by applicant.
2570.44 Withdrawal of exemption applications.
2570.45 Requests for reconsideration.
2570.46 Hearings in opposition to exemptions from restrictions on fiduciary self-dealing.
2570.47 Other hearings.
2570.48 Decision to grant exemptions.
2570.49 Limits on the effect of exemptions.
2570.50 Revocation or modification of exemptions.
2570.51 Public inspection and copies.
2570.52 Effective date.

Subpart C—Procedures for the Assessment of Civil Penalties Under ERISA Section 502(c)(2)

2570.60 Scope of rules.
2570.61 Definitions.
2570.62 Service: Copies of documents and pleadings.
2570.63 Parties, how designated.
2570.64 Consequences of default.
2570.65 Consent order or settlement.
2570.66 Scope of discovery.
2570.67 Summary decision.
2570.68 Decision of the administrative law judge.
2570.69 Review by the Secretary.
2570.70 Scope of review.
2570.71 Procedures for review by the Secretary.

Subpart D—Procedure for the Assessment of Civil Penalties Under ERISA Section 502(l)

2570.80 Scope of rules.
2570.81 In general.
2570.82 Definitions.
2570.83 Assessment of civil penalty.
2570.84 Payment of civil penalty.
2570.85 Waiver or reduction of civil penalty.
2570.86 Reduction of penalty by other penalty assessments.
2570.87 Revision of assessment.
2570.88 Effective date.

Subpart E—Procedures for the Assessment of Civil Penalties Under ERISA Section 502(c)(5)

2570.90 Scope of Rules.
2570.91 Definitions.
2570.92 Service: Copies of documents and pleadings.
2570.93 Parties, how designated.
2570.94 Consequences of default.
2570.95 Consent order or settlement.
2570.96 Scope of discovery.
2570.97 Summary decision.
2570.98 Decision of the administrative law judge.
2570.99 Review by the Secretary.
2570.100 Scope of review.
2570.101 Procedures for review by the Secretary.

Subpart F—Procedures for the Assessment of Civil Penalties Under ERISA Section 502(c)(6)

2570.110 Scope of rules.
2570.111 Definitions.
2570.112 Service: Copies of documents and pleadings.
2570.113 Parties, how designated.
2570.114 Consequences of default.

2570.115 Consent order or settlement.
2570.116 Scope of discovery.
2570.117 Summary decision.
2570.118 Decision of the administrative law judge.
2570.119 Review by the Secretary.
2570.120 Scope of review.
2570.121 Procedures for review by the Secretary.

Subpart G—Procedures for the Assessment of Civil Penalties under ERISA Section 502(c)(7)

2570.130 Scope of rules.
2570.131 Definitions.
2570.132 Service: Copies of documents and pleadings.
2570.133 Parties, how designated.
2570.134 Consequences of default.
2570.135 Consent order or settlement.
2570.136 Scope of discovery.
2570.137 Summary decision.
2570.138 Decision of the administrative law judge.
2570.139 Review by the Secretary.
2570.140 Scope of review.
2570.141 Procedures for review by the Secretary.

Subpart H—Procedures for Issuance of Findings Under ERISA Sec. 3(40)

2570.150 Scope of rules.
2570.151 In general.
2570.152 Definitions.
2570.153 Parties.
2570.154 Filing and contents of petition.
2570.155 Service.
2570.156 Expedited proceedings.
2570.157 Allocation of burden of proof.
2570.158 Decision of the Administrative Law Judge.
2570.159 Review by the Secretary.

Subpart I—Procedures for the Assessment of Civil Penalties Under ERISA Section 502(c)(8)

2570.160 Scope of rules.
2570.161 Definitions.
2570.162 Service: Copies of documents and pleadings.
2570.163 Parties, how designated.
2570.164 Consequences of default.
2570.165 Consent order or settlement.
2570.166 Scope of discovery.
2570.167 Summary decision.
2570.168 Decision of the administrative law judge.
2570.169 Review by the Secretary.
2570.170 Scope of review.
2570.171 Procedures for review by the Secretary.

AUTHORITY: 5 U.S.C. 8477; 29 U.S.C. 1002(40), 1021, 1108, 1132, and 1135; sec. 102, Reorganization Plan No. 4 of 1978, 5 U.S.C. App at 672 (2006); Secretary of Labor's Order 3–2010, 75 FR 55354 (September 10, 2010)

Subpart I is also issued under 29 U.S.C. 1132(c)(8).

SOURCE: 53 FR 37476, Sept. 26, 1988, unless otherwise noted.

Subpart A—Procedures for the Assessment of Civil Sanctions Under ERISA Section 502(i)

§ 2570.1 Scope of rules.

The rules of practice set forth in this part are applicable to ''prohibited transaction penalty proceedings'' (as defined in § 2570.2(o) of this part) under section 502(i) of the Employee Retirement Income Security Act of 1974. The rules of procedure for administrative hearings published by the Department's Office of Administrative Law Judges at part 18 of this title will apply to matters arising under ERISA section 502(i) except as modified by this section. These proceedings shall be conducted as expeditiously as possible, and the parties shall make every effort to avoid delay at each stage of the proceedings.

§ 2570.2 Definitions.

For prohibited transaction penalty proceedings, this section shall apply in lieu of the definitions in § 18.2 of this title:

(a) *Adjudicatory proceeding* means a judicial-type proceeding leading to the formulation of a final order;

(b) *Administrative law judge* means an administrative law judge appointed pursuant to the provisions of 5 U.S.C. 3105;

(c) *Answer* is defined for these proceedings as set forth in § 18.5(d)(2) of this title;

(d) *Commencement of proceeding* is the filing of an answer by the respondent;

(e) *Consent agreement* means any written document containing a specified proposed remedy or other relief acceptable to the Department and consenting parties;

(f) *ERISA* means the Employee Retirement Income Security Act of 1974, as amended;

(g) *Final order* means the final decision or action of the Department of Labor concerning the assessment of a

civil sanction under ERISA section 502(i) against a particular party. Such final order may result from a decision of an administrative law judge or the Secretary, or the failure of a party to invoke the procedures for hearings or appeals under this title. Such a final order shall constitute final agency action within the meaning of 5 U.S.C. 704;

(h) *Hearing* means that part of a proceeding which involves the submission of evidence, either by oral presentation or written submission, to the administrative law judge;

(i) *Notice* means any document, however designated, issued by the Department of Labor which initiates an adjudicatory proceeding under ERISA section 502(i);

(j) *Order* means the whole or any part of a final procedural or substantive disposition of a matter under ERISA section 502(i);

(k) *Party* includes a person or agency named or admitted as a party to a proceeding;

(l) *Person* includes an individual, partnership, corporation, employee benefit plan, association, exchange or other entity or organization;

(m) *Petition* means a written request, made by a person or party, for some affirmative action;

(n) *Pleading* means the notice, the answer to the notice, any supplement or amendment thereto, and any reply that may be permitted to any answer, supplement or amendment;

(o) *Prohibited transaction penalty proceeding* means a proceeding relating to the assessment of the civil penalty provided for in section 502(i) of ERISA;

(p) *Respondent* means the party against whom the Department is seeking to assess a civil sanction under ERISA section 502(i);

(q) *Secretary* means the Secretary of Labor and includes, pursuant to any delegation of authority by the Secretary, any assistant secretary (including the Assistant Secretary for Employee Benefits Security), administrator, commissioner, appellate body, board, or other official;

(r) *Solicitor* means the Solicitor of Labor or his or her delegate.

§ 2570.3 Service: Copies of documents and pleadings.

For prohibited transaction penalty proceedings, this section shall apply in lieu of § 18.3 of this title.

(a) *General*. Copies of all documents shall be served on all parties of record. All documents should clearly designate the docket number, if any, and short title of all matters. All documents shall be delivered or mailed to the Chief Docket Clerk, Office of Administrative Law Judges, 800 K Street, NW., Suite 400, Washington, DC 20001–8002, or to the OALJ regional Office to which the proceedings may have been transferred for hearing. Each document filed shall be clear and legible.

(b) *By parties*. All motions, petitions, pleadings, briefs or other documents shall be filed with the Office of Administrative Law Judges with a copy including any attachments to all other parties of record. When a party is represented by an attorney, service shall be made upon the attorney. Service of any document upon any party may be made by personal delivery or by mailing a copy to the last known address. The Department shall be served by delivery to the Associate Solicitor, Plan Benefits Security Division, ERISA Section 502(i) Proceeding, P.O. Box 1914, Washington, DC 20013. The person serving the document shall certify to the manner and date of service.

(c) *By the Office of Administrative Law Judges*. Service of orders, decisions and all other documents, except notices, shall be made by regular mail to the last known address.

(d) *Service of notices*. (1) Service of notices shall be made either:

(i) By delivering a copy to the individual, any partner, any officer of a corporation, or any attorney of record;

(ii) By leaving a copy at the principal office, place of business, or residence of such individual, partner, officer or attorney; or

(iii) By mailing a copy to the last known address of such individual, partner, officer or attorney.

(2) If service is accomplished by certified mail, service is complete upon mailing. If done by regular mail, service is complete upon receipt by the addressee.

(e) *Form of pleadings.* (1) Every pleading shall contain information indicating the name of the Employee Benefits Security Administration (EBSA) as the agency under which the proceeding is instituted, the title of the proceeding, the docket number (if any) assigned by the Office of Administrative Law Judges and a designation of the type of pleading or paper (e.g., notice, motion to dismiss, etc.). The pleading or paper shall be signed and shall contain the address and telephone number of the party or person representing the party. Although there are no formal specifications for documents, they should be typewritten when possible on standard size 8½ × 11 inch paper.

(2) Illegible documents, whether handwritten, typewritten, photocopied, or otherwise, will not be accepted. Papers may be reproduced by any duplicating process provided all copies are clear and legible.

[53 FR 37476, Sept. 26, 1988, as amended at 65 FR 7191, Feb. 11, 2000; 68 FR 17508, Apr. 9, 2003]

§ 2570.4 Parties.

For prohibited transaction penalty proceedings, this section shall apply in lieu of § 18.10 of this title.

(a) The term *party* wherever used in these rules shall include any natural person, corporation, employee benefit plan, association, firm, partnership, trustee, receiver, agency, public or private organization, or government agency. A party against whom a civil sanction is sought shall be designated as ''respondent.'' The Department shall be designated as the ''complainant.''

(b) Other persons or organizations shall be permitted to participate as parties only if the administrative law judge finds that the final decision could directly and adversely affect them or the class they represent, that they may contribute materially to the disposition of the proceedings and their interest is not adequately represented by existing parties, and that in the discretion of the administrative law judge the participation of such persons or organizations would be appropriate.

(c) A person or organization not named as a respondent wishing to participate as a party under this section shall submit a petition to the administrative law judge within fifteen (15) days after the person or organization has knowledge of or should have known about the proceeding. The petition shall be filed with the administrative law judge and served on each person or organization who has been made a party at the time of filing. Such petition shall concisely state:

(1) Petitioner's interest in the proceeding;

(2) How his or her participation as a party will contribute materially to the disposition of the proceeding;

(3) Who will appear for petitioner;

(4) The issues on which petitioner wishes to participate; and

(5) Whether petitioner intends to present witnesses.

(d) Objections to the petition may be filed by a party within fifteen (15) days of the filing of the petition. If objections to the petition are filed, the administrative law judge shall then determine whether petitioners have the requisite interest to be a party in the proceedings, as defined in paragraph (b) of this section, and shall permit or deny participation accordingly. Where petitions to participate as parties are made by individuals or groups with common interests, the administrative law judge may request all such petititioners to designate a single representative, or he or she may recognize one or more of such petitioners. The administrative law judge shall give each such petitioner as well as the parties, written notice of the decision on his or her petition. For each petition granted, the administrative law judge shall provide a brief statement of the basis of the decision. If the petition is denied, he or she shall briefly state the grounds for denial and shall then treat the petition as a request for participation as amicus curiae.

§ 2570.5 Consequences of default.

For prohibited transaction penalty proceedings, this section shall apply in lieu of § 18.5(b) of this title. Failure of the respondent to file an answer within the 30 day time period provided in § 18.5 of this title shall be deemed to constitute a waiver of his right to appear and contest the allegations of the notice, and such failure shall be deemed

to be an admission of the facts as alleged in the notice for purposes of the prohibited transaction penalty proceeding. Such notice shall then become the final order of the Secretary, except that the administrative law judge may set aside a default entered under this provision where there is proof of defective notice.

§ 2570.6 Consent order or settlement.

For prohibited transaction penalty proceedings, the following shall apply in lieu of § 18.9 of this title.

(a) *General.* At any time after the commencement of a proceeding, but at least five (5) days prior to the date set for hearing, the parties jointly may move to defer the hearing for a reasonable time to permit negotiation of a settlement or an agreement containing findings and an order disposing of the whole or any part of the proceeding. The allowance of such deferment and the duration thereof shall be in the discretion of the administrative law judge, after consideration of such factors as the nature of the proceeding, the requirements of the public interest, the representations of the parties and the probability of reaching an agreement which will result in a just disposition of the issues involved.

(b) *Content.* Any agreement containing consent findings and an order disposing of a proceeding or any part thereof shall also provide:

(1) That the order shall have the same force and effect as an order made after full hearing;

(2) That the entire record on which any order may be based shall consist solely of the notice and the agreement;

(3) A waiver of any further procedural steps before the administrative law judge;

(4) A waiver of any right to challenge or contest the validity of the order and decision entered into in accordance with the agreement; and

(5) That the order and decision of the administrative law judge shall be final agency action.

(c) *Submission.* On or before the expiration of the time granted for negotiations, but, in any case, at least five (5) days prior to the date set for hearing, the parties or their authorized representative or their counsel may:

(1) Submit the proposed agreement containing consent findings and an order to the administrative law judge; or

(2) Notify the administrative law judge that the parties have reached a full settlement and have agreed to dismissal of the action subject to compliance with the terms of the settlement; or

(3) Inform the administrative law judge that agreement cannot be reached.

(d) *Disposition.* In the event a settlement agreement containing consent findings and an order is submitted within the time allowed therefor, the administrative law judge shall issue a decision incorporating such findings and agreement within thirty (30) days of his receipt of such document. The decision of the administrative law judge shall incorporate all of the findings, terms, and conditions of the settlement agreement and consent order of the parties. Such decision shall become final agency action within the meaning of 5 U.S.C. 704.

(e) *Settlement without consent of all parties.* In cases in which some, but not all, of the parties to a proceeding submit a consent agreement to the administrative law judge, the following procedure shall apply:

(1) If all of the parties have not consented to the proposed settlement submitted to the administrative law judge, then such non-consenting parties must receive notice, and a copy, of the proposed settlement at the time it is submitted to the administrative law judge;

(2) Any non-consenting party shall have fifteen (15) days to file any objections to the proposed settlement with the administrative law judge and all other parties;

(3) If any party submits an objection to the proposed settlement, the administrative law judge shall decide within thirty (30) days after receipt of such objections whether he shall sign or reject the proposed settlement. Where the record lacks substantial evidence upon which to base a decision or there is a genuine issue of material fact, then the administrative law judge may establish procedures for the purpose of receiving additional evidence upon

which a decision on the contested issues may reasonably be based;

(4) If there are no objections to the proposed settlement, or if the administrative law judge decides to sign the proposed settlement after reviewing any such objections, the administrative law judge shall incorporate the consent agreement into a decision meeting the requirements of paragraph (d) of this section.

§ 2570.7 Scope of discovery.

For prohibited transaction penalty proceedings, this section shall apply in lieu of § 18.14 of this title.

(a) A party may file a motion to conduct discovery with the administrative law judge. The motion for discovery shall be granted by the administrative law judge only upon a showing of good cause. In order to establish ''good cause'' for the purposes of this section, a party must show that the discovery requested relates to a genuine issue as to a material fact that is relevant to the proceeding. The order of the administrative law judge shall expressly limit the scope and terms of discovery to that for which ''good cause'' has been shown, as provided in this paragraph.

(b) A party may obtain discovery of documents and tangible things otherwise discoverable under paragraph (a) of this section and prepared in anticipation of or for the hearing by or for another party's representative (including his or her attorney, consultant, surety, indemnitor, insurer, or agent) only upon a showing that the party seeking discovery has substantial need of the materials or information in the preparation of his or her case and that he or she is unable without undue hardship to obtain the substantial equivalent of the materials or information by other means. In ordering discovery of such materials when the required showing has been made, the administrative law judge shall protect against disclosure of the mental impressions, conclusions, opinions, or legal theories of an attorney or other representative of a party concerning the proceeding.

§ 2570.8 Summary decision.

For prohibited transaction penalty proceedings, this section shall apply in lieu of § 18.41 of this title.

(a) *No genuine issue of material fact.* (1) Where no genuine issue of a material fact is found to have been raised, the administrative law judge may issue a decision which, in the absence of an appeal pursuant to §§ 2570.10–2570.12 of this part, shall become a final order.

(2) A decision made under this paragraph shall include a statement of:

(i) Findings of fact and conclusions of law, and the reasons therefor, on all issues presented; and

(ii) Any terms and conditions of the rule or order.

(3) A copy of any decision under this paragraph shall be served on each party.

(b) *Hearings on issue of fact.* Where a genuine question of material fact is raised, the administrative law judge shall, and in any other case may, set the case for an evidentiary hearing.

§ 2570.9 Decision of the administrative law judge.

For prohibited transaction penalty proceedings, this section shall apply in lieu of § 18.57 of this title

(a) *Proposed findings of fact, conclusions, and order.* Within twenty (20) days of the filing of the transcript of the testimony or such additional time as the administrative law judge may allow, each party may file with the administrative law judge, subject to the judge's discretion, proposed findings of fact, conclusions of law, and order together with a supporting brief expressing the reasons for such proposals. Such proposals and brief shall be served on all parties, and shall refer to all portions of the record and to all authorities relied upon in support of each proposal.

(b) *Decision of the administrative law judge.* Within a reasonable time after the time allowed for the filing of the proposed findings of fact, conclusions of law, and order, or within thirty (30) days after receipt of an agreement containing consent findings and order disposing of the disputed matter in whole, the administrative law judge shall make his or her decision. The decision of the administrative law judge shall

include findings of fact and conclusions of law with reasons therefor upon each material issue of fact of law presented on the record. The decision of the administrative law judge shall be based upon the whole record. In a contested case in which the Department and the Respondent have presented their positions to the administrative law judge pursuant to the procedures for prohibited transaction penalty proceedings as set forth in this part, the penalty (if any) which may be included in the decision of the administrative law judge shall be limited to the sanction expressly provided for in section 502(i) of ERISA. It shall be supported by reliable and probative evidence. The decision of the administrative law judge shall become final agency action within the meaning of 5 U.S.C. 704 unless an appeal is made pursuant to the procedures set forth in §§ 2570.10 through 2570.12.

§ 2570.10 Review by the Secretary.

(a) The Secretary may review a decision of an administrative law judge. Such a review may occur only when a party files a notice of appeal from a decision of an administrative law judge within twenty (20) days of the issuance of such decision. In all other cases, the decision of the administrative law judge shall become final agency action within the meaning of 5 U.S.C. 704.

(b) A notice of appeal to the Secretary shall state with specificity the issue(s) in the decision of the administrative law judge on which the party is seeking review. Such notice of appeal must be served on all parties of record.

(c) Upon receipt of a notice of appeal, the Secretary shall request the Chief Administrative Law Judge to submit to him a copy of the entire record before the administrative law judge.

§ 2570.11 Scope of review.

The review of the Secretary shall not be a *de novo* proceeding but rather a review of the record established before the administrative law judge. There shall be no opportunity for oral argument.

§ 2570.12 Procedures for review by the Secretary.

(a) Upon receipt of a notice of appeal, the Secretary shall establish a briefing schedule which shall be served on all parties of record. Upon motion of one or more of the parties, the Secretary may, in his discretion, permit the submission of reply briefs.

(b) The Secretary shall issue a decision as promptly as possible after receipt of the briefs of the parties. The Secretary may affirm, modify, or set aside, in whole or in part, the decision on appeal and shall issue a statement of reasons and bases for the action(s) taken. Such decision by the Secretary shall be final agency action within the meaning of 5 U.S.C. 704.

Subpart B—Procedures Governing the Filing and Processing of Prohibited Transaction Exemption Applications

SOURCE: 76 FR 66644, Oct. 27, 2011, unless otherwise noted.

§ 2570.30 Scope of rules.

(a) The rules of procedure set forth in this subpart apply to prohibited transaction exemptions issued by the Department under the authority of:

(1) Section 408(a) of the Employee Retirement Income Security Act of 1974 (ERISA);

(2) Section 4975(c)(2) of the Internal Revenue Code of 1986 (the Code);[1] or

(3) The Federal Employees' Retirement System Act of 1986 (FERSA) (5 U.S.C. 8477(c)(3)).

(b) Under these rules of procedure, the Department may conditionally or unconditionally exempt any fiduciary or transaction, or class of fiduciaries or transactions, from all or part of the restrictions imposed by section 406 of ERISA and the corresponding restrictions of the Code and FERSA. While administrative exemptions granted

[1] Section 102 of Presidential Reorganization Plan No. 4 of 1978 (3 CFR part 332 (1978), *reprinted in* 5 U.S.C. app. at 672 (2006), *and in* 92 Stat. 3790 (1978)), effective December 31, 1978, generally transferred the authority of the Secretary of the Treasury to issue administrative exemptions under section 4975(c)(2) of the Code to the Department of Labor.

under these rules are ordinarily prospective in nature, an applicant may also obtain retroactive relief for past prohibited transactions if certain safeguards described in this subpart were in place at the time the transaction was consummated.

(c) These rules govern the filing and processing of applications for both individual and class exemptions that the Department may propose and grant pursuant to the authorities cited in paragraph (a) of this section. The Department may also propose and grant exemptions on its own motion, in which case the procedures relating to publication of notices, hearings, evaluation and public inspection of the administrative record, and modification or revocation of previously granted exemptions will apply.

(d) The issuance of an administrative exemption by the Department under these procedural rules does not relieve a fiduciary or other party in interest or disqualified person with respect to a plan from the obligation to comply with certain other provisions of ERISA, the Code, or FERSA, including any prohibited transaction provisions to which the exemption does not apply, and the general fiduciary responsibility provisions of ERISA which require, among other things, that a fiduciary discharge his or her duties respecting the plan solely in the interests of the participants and beneficiaries of the plan and in a prudent fashion; nor does it affect the requirement of section 401(a) of the Code that the plan must operate for the exclusive benefit of the employees of the employer maintaining the plan and their beneficiaries.

(e) The Department will not propose or issue exemptions upon oral request alone, nor will the Department grant exemptions orally. An applicant for an administrative exemption may request and receive oral advice from Department employees in preparing an exemption application. However, such advice does not constitute part of the administrative record and is not binding on the Department in its processing of an exemption application or in its examination or audit of a plan.

(f) The Department will generally treat any exemption application that is filed solely under section 408(a) of ERISA or solely under section 4975(c)(2) of the Code as an exemption request filed under both section 408(a) and section 4975(c)(2) if it relates to a transaction that would be prohibited both by ERISA and the corresponding provisions of the Code.

§ 2570.31 Definitions.

For purposes of these procedures, the following definitions apply:

(a) An *affiliate* of a person means—

(1) Any person directly or indirectly through one or more intermediaries, controlling, controlled by, or under common control with the person. For purposes of this paragraph, the term ''control'' means the power to exercise a controlling influence over the management or policies of a person other than an individual;

(2) Any director of, relative of, or partner in, any such person;

(3) Any corporation, partnership, trust, or unincorporated enterprise of which such person is an officer, director, or a 5 percent or more partner or owner; or

(4) Any employee or officer of the person who—

(i) Is highly compensated (as defined in section 4975(e)(2)(H) of the Code), or

(ii) Has direct or indirect authority, responsibility, or control regarding the custody, management, or disposition of plan assets involved in the subject exemption transaction.

(b) A *class exemption* is an administrative exemption, granted under section 408(a) of ERISA, section 4975(c)(2) of the Code, and/or 5 U.S.C. 8477(c)(3), which applies to any transaction and party in interest within the class of transactions and parties in interest specified in the exemption when the conditions of the exemption are satisfied.

(c) *Department* means the U.S. Department of Labor and includes the Secretary of Labor or his or her delegate exercising authority with respect to prohibited transaction exemptions to which this subpart applies.

(d) *Exemption transaction* means the transaction or transactions for which an exemption is requested.

(e) An *individual exemption* is an administrative exemption, granted under

section 408(a) of ERISA, section 4975(c)(2) of the Code, and/or 5 U.S.C. 8477(c)(3), which applies only to the specific parties in interest and transactions named or otherwise defined in the exemption.

(f) A *party in interest* means a person described in section 3(14) of ERISA or 5 U.S.C. 8477(a)(4) and includes a *disqualified person*, as defined in section 4975(e)(2) of the Code.

(g) *Pooled fund* means an account or fund for the collective investment of the assets of two or more unrelated plans, including (but not limited to) a pooled separate account maintained by an insurance company and a common or collective trust fund maintained by a bank or similar financial institution.

(h) A *qualified appraisal report* is any appraisal report that satisfies all of the requirements set forth in this subpart at § 2570.34(c)(4).

(i) A *qualified independent appraiser* is any individual or entity with appropriate training, experience, and facilities to provide a qualified appraisal report on behalf of the plan regarding the particular asset or property appraised in the report, that is independent of and unrelated to any party in interest engaging in the exemption transaction and its affiliates; in general, the determination as to the independence of the appraiser is made by the Department on the basis of all relevant facts and circumstances. In making this determination, the Department generally will take into account the amount of both the appraiser's revenues and projected revenues for the current federal income tax year (including amounts received for preparing the appraisal report) that will be derived from the party in interest or its affiliates relative to the appraiser's revenues from all sources for the prior federal income tax year. Absent facts and circumstances demonstrating a lack of independence, the Department will operate according to the presumption that such appraiser will be independent if the revenues it receives or is projected to receive, within the current federal income tax year, from parties in interest (and their affiliates) to the transaction are not more than 2% of such appraiser's annual revenues based upon its prior income tax year. Although the presumption does not apply when the aforementioned percentage exceeds 2%, an appraiser nonetheless may be considered independent based upon other facts and circumstances provided that it receives or is projected to receive revenues that are not more than 5% within the current federal income tax year from parties in interest (and their affiliates) to the transaction based upon its prior income tax year.

(j) A *qualified independent fiduciary* is any individual or entity with appropriate training, experience, and facilities to act on behalf of the plan regarding the exemption transaction in accordance with the fiduciary duties and responsibilities prescribed by ERISA, that is independent of and unrelated to any party in interest engaging in the exemption transaction and its affiliates; in general, the determination as to the independence of a fiduciary is made by the Department on the basis of all relevant facts and circumstances. In making this determination, the Department generally will take into account the amount of both the fiduciary's revenues and projected revenues for the current federal income tax year (including amounts received for preparing fiduciary reports) that will be derived from the party in interest or its affiliates relative to the fiduciary's revenues from all sources for the prior federal income tax year. Absent facts and circumstances demonstrating a lack of independence, the Department will operate according to the presumption that such fiduciary will be independent if the revenues it receives or is projected to receive, within the current federal income tax year, from parties in interest (and their affiliates) to the transaction are not more than 2% of such fiduciary's annual revenues based upon its prior income tax year. Although the presumption does not apply when the aforementioned percentage exceeds 2%, a fiduciary nonetheless may be considered independent based upon other facts and circumstances provided that it receives or is projected to receive revenues that are not more than 5% within the current federal income tax year from parties in interest (and their affiliates) to the transaction based upon its prior income tax year.

§ 2570.32 Persons who may apply for exemptions.

(a) The Department will initiate exemption proceedings upon the application of:

(1) Any party in interest to a plan who is or may be a party to the exemption transaction;

(2) Any plan which is a party to the exemption transaction; or

(3) In the case of an application for an exemption covering a class of parties in interest or a class of transactions, in addition to any person described in paragraphs (a)(1) and (2) of this section, an association or organization representing parties in interest who may be parties to the exemption transaction.

(b) An application by or for a person described in paragraph (a) of this section, may be submitted by the applicant or by an authorized representative. An application submitted by a representative of the applicant must include proof of authority in the form of:

(1) A power of attorney; or

(2) A written certification from the applicant that the representative is authorized to file the application.

(c) If the authorized representative of an applicant submits an application for an exemption to the Department together with proof of authority to file the application as required by paragraph (b) of this section, the Department will direct all correspondence and inquiries concerning the application to the representative unless requested to do otherwise by the applicant.

§ 2570.33 Applications the Department will not ordinarily consider.

(a) The Department ordinarily will not consider:

(1) An application that fails to include all the information required by §§ 2570.34 and 2570.35 of this subpart or otherwise fails to conform to the requirements of these procedures; or

(2) An application involving a transaction or transactions which are the subject of an investigation for possible violations of part 1 or 4 of subtitle B of Title I of ERISA or section 8477 or 8478 of FERSA or an application involving a party in interest who is the subject of such an investigation or who is a defendant in an action by the Department or the Internal Revenue Service to enforce the above-mentioned provisions of ERISA or FERSA.

(b) An application for an individual exemption relating to a specific transaction or transactions ordinarily will not be considered if the Department has under consideration a class exemption relating to the same type of transaction or transactions. Notwithstanding the foregoing, the Department may consider such an application if the issuance of the final class exemption may not be imminent, and the Department determines that time constraints necessitate consideration of the transaction on an individual basis.

(c) The administrative record of an exemption application includes the initial exemption application and any supporting information provided by the applicant (as well as any comments and testimony received by the Department in connection with an application). If an applicant designates as confidential any information required by these regulations or requested by the Department, the Department will determine whether the information is material to the exemption determination. If it determines the information to be material, the Department will not process the application unless the applicant withdraws the claim of confidentiality.

(d) If for any reason the Department decides not to consider an exemption application, it will inform the applicant in writing of that decision and of the reasons therefore.

§ 2570.34 Information to be included in every exemption application.

(a) All applications for exemptions must contain the following information:

(1) The name(s) of the applicant(s);

(2) A detailed description of the exemption transaction including identification of all the parties in interest involved, a description of any larger integrated transaction of which the exemption transaction is a part, and a chronology of the events leading up to the transaction;

(3) The identity of any representatives for the affected plan(s) and parties in interest and what individuals or entities they represent;

(4) The reasons a plan would have for entering into the exemption transaction;

(5) The prohibited transaction provisions from which exemptive relief is requested and the reason why the transaction would violate each such provision;

(6) Whether the exemption transaction is customary for the industry or class involved;

(7) Whether the exemption transaction is or has been the subject of an investigation or enforcement action by the Department or by the Internal Revenue Service; and

(8) The hardship or economic loss, if any, which would result to the person or persons on behalf of whom the exemption is sought, to affected plans, and to their participants and beneficiaries from denial of the exemption.

(b) All applications for exemption must also contain the following:

(1) A statement explaining why the requested exemption would be—

(i) Administratively feasible;

(ii) In the interests of affected plans and their participants and beneficiaries; and

(iii) Protective of the rights of participants and beneficiaries of affected plans.

(2) With respect to the notification of interested persons required by § 2570.43:

(i) A description of the interested persons to whom the applicant intends to provide notice;

(ii) The manner in which the applicant will provide such notice; and

(iii) An estimate of the time the applicant will need to furnish notice to all interested persons following publication of a notice of the proposed exemption in the FEDERAL REGISTER.

(3) If an advisory opinion has been requested by any party to the exemption transaction from the Department with respect to any issue relating to the exemption transaction—

(i) A copy of the letter concluding the Department's action on the advisory opinion request; or

(ii) If the Department has not yet concluded its action on the request:

(A) A copy of the request or the date on which it was submitted together with the Department's correspondence control number as indicated in the acknowledgment letter; and

(B) An explanation of the effect of the issuance of an advisory opinion upon the exemption transaction.

(4) If the application is to be signed by anyone other than an individual party in interest seeking exemptive relief on his or her own behalf, a statement which—

(i) Identifies the individual signing the application and his or her position or title; and

(ii) Explains briefly the basis of his or her familiarity with the matters discussed in the application.

(5)(i) A declaration in the following form:

> Under penalty of perjury, I declare that I am familiar with the matters discussed in this application and, to the best of my knowledge and belief, the representations made in this application are true and correct.

(ii) This declaration must be dated and signed by:

(A) The applicant, in its individual capacity, in the case of an individual party in interest seeking exemptive relief on his or her own behalf;

(B) A corporate officer or partner where the applicant is a corporation or partnership;

(C) A designated officer or official where the applicant is an association, organization or other unincorporated enterprise; or

(D) The plan fiduciary that has the authority, responsibility, and control with respect to the exemption transaction where the applicant is a plan.

(c) Specialized statements, as applicable, from a qualified independent appraiser acting solely on behalf of the plan, such as appraisal reports or analyses of market conditions, submitted to support an application for exemption must be accompanied by a statement of consent from such appraiser acknowledging that the statement is being submitted to the Department as part of an application for exemption. Such statements must also contain the following written information:

(1) A copy of the qualified independent appraiser's engagement letter

with the plan describing the specific duties the appraiser shall undertake;

(2) A summary of the qualified independent appraiser's qualifications to serve in such capacity;

(3) A detailed description of any relationship that the qualified independent appraiser has had or may have with any party in interest engaging in the transaction with the plan, or its affiliates, that may influence the appraiser;

(4) A written appraisal report prepared by the qualified independent appraiser, acting solely on behalf of the plan, rather than, for example, on behalf of the plan sponsor, which satisfies the following requirements:

(i) The report must describe the method(s) used in determining the fair market value of the subject asset(s) and an explanation of why such method best reflects the fair market value of the asset(s);

(ii) The report must take into account any special benefit that the party in interest or its affiliate(s) may derive from control of the asset(s), such as from owning an adjacent parcel of real property or gaining voting control over a company; and

(iii) The report must be current and not more than one year old from the date of the transaction, and there must be a written update by the qualified independent appraiser affirming the accuracy of the appraisal as of the date of the transaction. If the appraisal report is a year old or more, a new appraisal shall be submitted to the Department by the applicant.

(5) If the subject of the appraisal report is real property, the qualified independent appraiser shall submit a written representation that he or she is a member of a professional organization of appraisers that can sanction its members for misconduct;

(6) If the subject of the appraisal report is an asset other than real property, the qualified independent appraiser shall submit a written representation describing the appraiser's prior experience in valuing assets of the same type; and

(7) The qualified independent appraiser shall submit a written representation disclosing the percentage of its current revenue that is derived from any party in interest involved in the transaction or its affiliates; in general, such percentage shall be computed by comparing, in fractional form:

(i) The amount of the appraiser's projected revenues from the current federal income tax year (including amounts received from preparing the appraisal report) that will be derived from the party in interest or its affiliates (expressed as a numerator); and

(ii) The appraiser's revenues from all sources for the prior federal income tax year (expressed as a denominator).

(d) For those exemption transactions requiring the retention of a qualified independent fiduciary to represent the interests of the plan, a statement must be submitted by such fiduciary that contains the following written information:

(1) A signed and dated declaration under penalty of perjury that, to the best of the qualified independent fiduciary's knowledge and belief, all of the representations made in such statement are true and correct;

(2) A copy of the qualified independent fiduciary's engagement letter with the plan describing the fiduciary's specific duties;

(3) An explanation for the conclusion that the fiduciary is a qualified independent fiduciary, which also must include a summary of that person's qualifications to serve in such capacity, as well as a description of any prior experience by that person or other demonstrated characteristics of the fiduciary (such as special areas of expertise) that render that person or entity suitable to perform its duties on behalf of the plan with respect to the exemption transaction;

(4) A detailed description of any relationship that the qualified independent fiduciary has had or may have with the party in interest engaging in the transaction with the plan or its affiliates;

(5) An acknowledgement by the qualified independent fiduciary that it understands its duties and responsibilities under ERISA in acting as a fiduciary on behalf of the plan rather than, for example, acting on behalf of the plan sponsor;

(6) The qualified independent fiduciary's opinion on whether the proposed transaction would be in the interests of the plan and of its participants and beneficiaries, and protective of the rights of participants and beneficiaries of such plan, along with a statement of the reasons on which the opinion is based;

(7) Where the proposed transaction is continuing in nature, a declaration by the qualified independent fiduciary that it is authorized to take all appropriate actions to safeguard the interests of the plan, and shall, during the pendency of the transaction:

(i) Monitor the transaction on behalf of the plan on a continuing basis;

(ii) Ensure that the transaction remains in the interests of the plan and, if not, take any appropriate actions available under the particular circumstances; and

(iii) Enforce compliance with all conditions and obligations imposed on any party dealing with the plan with respect to the transaction; and

(8) The qualified independent fiduciary shall submit a written representation disclosing the percentage of such fiduciary's current revenue that is derived from any party in interest involved in the transaction or its affiliates; in general, such percentage shall be computed by comparing, in fractional form:

(i) The amount of the fiduciary's projected revenues from the current federal income tax year that will be derived from the party in interest or its affiliates (expressed as a numerator); and

(ii) The fiduciary's revenues from all sources (excluding fixed, non-discretionary retirement income) for the prior federal income tax year (expressed as a denominator).

(e) Specialized statements, as applicable, from other third-party experts, including but not limited to economists or market specialists, submitted on behalf of the plan to support an application for exemption must be accompanied by a statement of consent from such expert acknowledging that the statement prepared on behalf of the plan is being submitted to the Department as part of an application for exemption. Such statements must also contain the following written information:

(1) A copy of the expert's engagement letter with the plan describing the specific duties the expert will undertake;

(2) A summary of the expert's qualifications to serve in such capacity; and

(3) A detailed description of any relationship that the expert has had or may have with any party in interest engaging in the transaction with the plan, or its affiliates, that may influence the actions of the expert.

(f) An application for exemption may also include a draft of the requested exemption which describes the transaction and parties in interest for which exemptive relief is sought and the specific conditions under which the exemption would apply.

§ 2570.35 Information to be included in applications for individual exemptions only.

(a) Except as provided in paragraph (c) of this section, every application for an individual exemption must include, in addition to the information specified in § 2570.34 of this subpart, the following information:

(1) The name, address, telephone number, and type of plan or plans to which the requested exemption applies;

(2) The Employer Identification Number (EIN) and the plan number (PN) used by such plan or plans in all reporting and disclosure required by the Department;

(3) Whether any plan or trust affected by the requested exemption has ever been found by the Department, the Internal Revenue Service, or by a court to have violated the exclusive benefit rule of section 401(a) of the Code, section 4975(c)(1) of the Code, section 406 or 407(a) of ERISA, or 5 U.S.C. 8477(c)(3), including a description of the circumstances surrounding such violation;

(4) Whether any relief under section 408(a) of ERISA, section 4975(c)(2) of the Code, or 5 U.S.C. 8477(c)(3) has been requested by, or provided to, the applicant or any of the parties on behalf of whom the exemption is sought and, if so, the exemption application number or the prohibited transaction exemption number;

(5) Whether the applicant or any of the parties in interest involved in the exemption transaction is currently, or has been within the last five years, a defendant in any lawsuit or criminal action concerning such person's conduct as a fiduciary or party in interest with respect to any plan (other than a lawsuit with respect to a routine claim for benefits), and a description of the circumstances of such lawsuit or criminal action;

(6) Whether the applicant (including any person described in § 2570.34(b)(5)(ii)) or any of the parties in interest involved in the exemption transaction has, within the last 13 years, been either convicted or released from imprisonment, whichever is later, as a result of: any felony involving abuse or misuse of such person's position or employment with an employee benefit plan or a labor organization; any felony arising out of the conduct of the business of a broker, dealer, investment adviser, bank, insurance company or fiduciary; income tax evasion; any felony involving the larceny, theft, robbery, extortion, forgery, counterfeiting, fraudulent concealment, embezzlement, fraudulent conversion, or misappropriation of funds or securities; conspiracy or attempt to commit any such crimes or a crime of which any of the foregoing crimes is an element; or any other crime described in section 411 of ERISA, and a description of the circumstances of any such conviction. For purposes of this section, a person shall be deemed to have been ''convicted'' from the date of the judgment of the trial court, regardless of whether that judgment remains under appeal;

(7) Whether, within the last five years, any plan affected by the exemption transaction, or any party in interest involved in the exemption transaction, has been under investigation or examination by, or has been engaged in litigation or a continuing controversy with, the Department, the Internal Revenue Service, the Justice Department, the Pension Benefit Guaranty Corporation, or the Federal Retirement Thrift Investment Board involving compliance with provisions of ERISA, provisions of the Code relating to employee benefit plans, or provisions of FERSA relating to the Federal Thrift Savings Fund. If so, the applicant must provide a brief statement describing the investigation, examination, litigation or controversy. The Department reserves the right to require the production of additional information or documentation concerning any of the above matters. In this regard, a denial of the exemption application will result from a failure to provide additional information requested by the Department.

(8) Whether any plan affected by the requested exemption has experienced a reportable event under section 4043 of ERISA, and, if so, a description of the circumstances of any such reportable event;

(9) Whether a notice of intent to terminate has been filed under section 4041 of ERISA respecting any plan affected by the requested exemption, and, if so, a description of the circumstances for the issuance of such notice;

(10) Names, addresses, and taxpayer identifying numbers of all parties in interest involved in the subject transaction;

(11) The estimated number of participants and beneficiaries in each plan affected by the requested exemption as of the date of the application;

(12) The percentage of the fair market value of the total assets of each affected plan that is involved in the exemption transaction;

(13) Whether the exemption transaction has been consummated or will be consummated only if the exemption is granted;

(14) If the exemption transaction has already been consummated:

(i) The circumstances which resulted in plan fiduciaries causing the plan(s) to engage in the transaction before obtaining an exemption from the Department;

(ii) Whether the transaction has been terminated;

(iii) Whether the transaction has been corrected as defined in Code section 4975(f)(5);

(iv) Whether Form 5330, Return of Excise Taxes Related to Employee Benefit Plans, has been filed with the Internal Revenue Service with respect to the transaction; and

(v) Whether any excise taxes due under section 4975(a) and (b) of the Code, or any civil penalties due under section 502(i) or (l) of ERISA by reason of the transaction have been paid. If so, the applicant should submit documentation (e.g., a canceled check) demonstrating that the excise taxes or civil penalties were paid.

(15) The name of every person who has investment discretion over any plan assets involved in the exemption transaction and the relationship of each such person to the parties in interest involved in the exemption transaction and the affiliates of such parties in interest;

(16) Whether or not the assets of the affected plan(s) are invested in loans to any party in interest involved in the exemption transaction, in property leased to any such party in interest, or in securities issued by any such party in interest, and, if such investments exist, a statement for each of these three types of investments which indicates:

(i) The type of investment to which the statement pertains;

(ii) The aggregate fair market value of all investments of this type as reflected in the plan's most recent annual report;

(iii) The approximate percentage of the fair market value of the plan's total assets as shown in such annual report that is represented by all investments of this type; and

(iv) The statutory or administrative exemption covering these investments, if any.

(17) The approximate aggregate fair market value of the total assets of each affected plan;

(18) The person(s) who will bear the costs of the exemption application and of notifying interested persons; and

(19) Whether an independent fiduciary is or will be involved in the exemption transaction and, if so, the names of the persons who will bear the cost of the fee payable to such fiduciary.

(b) Each application for an individual exemption must also include:

(1) True copies of all contracts, deeds, agreements, and instruments, as well as relevant portions of plan documents, trust agreements, and any other documents bearing on the exemption transaction;

(2) A discussion of the facts relevant to the exemption transaction that are reflected in these documents and an analysis of their bearing on the requested exemption;

(3) A copy of the most recent financial statements of each plan affected by the requested exemption; and

(4) A net worth statement with respect to any party in interest that is providing a personal guarantee with respect to the exemption transaction.

(c) Special rule for applications for individual exemption involving pooled funds:

(1) The information required by paragraphs (a)(8) through (12) of this section is not required to be furnished in an application for individual exemption involving one or more pooled funds;

(2) The information required by paragraphs (a)(1) through (7) and (a)(13) through (19) of this section and by paragraphs (b)(1) through (3) of this section must be furnished in reference to the pooled fund, rather than to the plans participating therein. (For purposes of this paragraph, the information required by paragraph (a)(16) of this section relates solely to other pooled fund transactions with, and investments in, parties in interest involved in the exemption transaction which are also sponsors of plans which invest in the pooled fund.);

(3) The following information must also be furnished—

(i) The estimated number of plans that are participating (or will participate) in the pooled fund; and

(ii) The minimum and maximum limits imposed by the pooled fund (if any) on the portion of the total assets of each plan that may be invested in the pooled fund.

(4) Additional requirements for applications for individual exemption involving pooled funds in which certain plans participate.

(i) This paragraph applies to any application for an individual exemption involving one or more pooled funds in which any plan participating therein—

(A) Invests an amount which exceeds 20% of the total assets of the pooled fund, or

(B) Covers employees of:

(*1*) The party sponsoring or maintaining the pooled fund, or any affiliate of such party, or

(*2*) Any fiduciary with investment discretion over the pooled fund's assets, or any affiliate of such fiduciary.

(ii) The exemption application must include, with respect to each plan described in paragraph (c)(4)(i) of this section, the information required by paragraphs (a)(1) through (3), (a)(5) through (7), (a)(10), (a)(12) through (16), and (a)(18) and (19), of this section. The information required by this paragraph must be furnished in reference to the plan's investment in the pooled fund (e.g., the names, addresses and taxpayer identifying numbers of all fiduciaries responsible for the plan's investment in the pooled fund (§ 2570.35(a)(10)), the percentage of the assets of the plan invested in the pooled fund (§ 2570.35(a)(12)), whether the plan's investment in the pooled fund has been consummated or will be consummated only if the exemption is granted (§ 2570.35(a)(13)), etc.).

(iii) The information required by paragraph (c)(4) of this section is in addition to the information required by paragraphs (c)(2) and (3) of this section relating to information furnished by reference to the pooled fund.

(5) The special rule and the additional requirements described in paragraphs (c)(1) through (4) of this section do not apply to an individual exemption request solely for the investment by a plan in a pooled fund. Such an application must provide the information required by paragraphs (a) and (b) of this section.

(d) Retroactive exemptions:

(1) Generally, the Department will favorably consider requests for retroactive relief, in all exemption applications, only where the safeguards necessary for the grant of a prospective exemption were in place at the time at which the parties entered into the transaction. An applicant for a retroactive exemption must have acted in good faith by taking reasonable and appropriate steps to protect the plan from abuse and unnecessary risk at the time of the transaction.

(2) Among the factors that the Department would take into account in making a finding that an applicant acted in good faith include the following:

(i) The participation of an independent fiduciary acting on behalf of the plan who is qualified to negotiate, approve and monitor the transaction;

(ii) The existence of a contemporaneous appraisal by a qualified independent appraiser or reference to an objective third party source, such as a stock or bond index;

(iii) The existence of a bidding process or evidence of comparable fair market transactions with unrelated third parties;

(iv) That the applicant has submitted an accurate and complete application for exemption containing documentation of all necessary and relevant facts and representations upon which the applicant relied. In this regard, additional weight will be given to facts and representations which are prepared and certified by a source independent of the applicant;

(v) That the applicant has submitted evidence that the plan fiduciary did not engage in an act or transaction knowing that such act or transaction was prohibited under section 406 of ERISA and/or section 4975 of the Code. In this regard, the Department will accord appropriate weight to the submission of a contemporaneous, reasoned legal opinion of counsel, upon which the plan fiduciary relied in good faith before entering the act or transaction;

(vi) That the applicant has submitted a statement of the circumstances which prompted the submission of the application for exemption and the steps taken by the applicant with regard to the transaction upon discovery of the violation;

(vii) That the applicant has submitted a statement, prepared and certified by an independent person familiar with the types of transactions for which relief is requested, demonstrating that the terms and conditions of the transaction (including, in the case of an investment, the return in fact realized by the plan) were at least as favorable to the plan as that obtainable in a similar transaction with an unrelated party; and

(viii) Such other undertakings and assurances with respect to the plan and

its participants that may be offered by the applicant which are relevant to the criteria under section 408(a) of ERISA and section 4975(c)(2) of the Code.

(3) The Department, as a general matter, will not favorably consider requests for retroactive exemptions where transactions or conduct with respect to which an exemption is requested resulted in a loss to the plan. In addition, the Department will not favorably consider requests for exemptions where the transactions are inconsistent with the general fiduciary responsibility provisions of sections 403 or 404 of ERISA or the exclusive benefit requirements of section 401(a) of the Code.

§ 2570.36 Where to file an application.

The Department's prohibited transaction exemption program is administered by the Employee Benefits Security Administration (EBSA). Any exemption application governed by these procedures may be mailed via first-class mail to: Employee Benefits Security Administration, Office of Exemption Determinations, U.S. Department of Labor, Room N–5700, 200 Constitution Avenue NW., Washington, DC 20210. Alternatively, applications may be emailed to the Department at *e-OED@dol.gov* or transmitted via facsimile at (202) 219–0204. Notwithstanding the foregoing methods of transmission, applicants are also required to submit one paper copy of the exemption application for the Department's file.

§ 2570.37 Duty to amend and supplement exemption applications.

(a) While an exemption application is pending final action with the Department, an applicant must promptly notify the Department in writing if he or she discovers that any material fact or representation contained in the application or in any documents or testimony provided in support of the application is inaccurate, if any such fact or representation changes during this period, or if, during the pendency of the application, anything occurs that may affect the continuing accuracy of any such fact or representation. In addition, an applicant must promptly notify the Department in writing if it learns that a material fact or representation has been omitted from the exemption application.

(b) If, at any time during the pendency of an exemption application, the applicant or any other party in interest who would participate in the exemption transaction becomes the subject of an investigation or enforcement action by the Department, the Internal Revenue Service, the Justice Department, the Pension Benefit Guaranty Corporation, or the Federal Retirement Thrift Investment Board involving compliance with provisions of ERISA, provisions of the Code relating to employee benefit plans, or provisions of FERSA relating to the Federal Thrift Savings Fund, the applicant must promptly notify the Department.

(c) The Department may require an applicant to provide documentation it considers necessary to verify any statements contained in the application or in supporting materials or documents.

§ 2570.38 Tentative denial letters.

(a) If, after reviewing an exemption file, the Department tentatively concludes that it will not propose or grant the exemption, it will notify the applicant in writing. At the same time, the Department will provide a brief statement of the reasons for its tentative denial.

(b) An applicant will have 20 days from the date of a tentative denial letter to request a conference under § 2570.40 of this subpart and/or to notify the Department of its intent to submit additional information under § 2570.39 of this subpart. If the Department does not receive a request for a conference or a notification of intent to submit additional information within that time, it will issue a final denial letter pursuant to § 2570.41.

(c) The Department need not issue a tentative denial letter to an applicant before issuing a final denial letter where the Department has conducted a hearing on the exemption pursuant to either § 2570.46 or § 2570.47.

§ 2570.39 Opportunities to submit additional information.

(a) An applicant may notify the Department of its intent to submit additional information supporting an exemption application either by telephone or by letter sent to the address furnished in the applicant's tentative denial letter, or electronically to the email address provided in the tentative denial letter. At the same time, the applicant should indicate generally the type of information that will be submitted.

(b) The additional information an applicant intends to provide in support of the application must be in writing and be received by the Department within 40 days from the date of the tentative denial letter. All such information must be accompanied by a declaration under penalty of perjury attesting to the truth and correctness of the information provided, which is dated and signed by a person qualified under § 2570.34(b)(5) of this subpart to sign such a declaration.

(c) If, for reasons beyond its control, an applicant is unable to submit all the additional information he or she intends to provide in support of his application within the 40-day period described in paragraph (b) of this section, he or she may request an extension of time to furnish the information. Such requests must be made before the expiration of the 40-day period and will be granted only in unusual circumstances and for a limited period as determined, respectively, by the Department in its sole discretion.

(d) If an applicant is unable to submit all of the additional information he or she intends to provide within the 40-day period specified in paragraph (b) of this section, or within any additional period granted pursuant to paragraph (c) of this section, the applicant may withdraw the exemption application before expiration of the applicable time period and reinstate it later pursuant to § 2570.44.

(e) The Department will issue, without further notice, a final denial letter denying the requested exemption pursuant to § 2570.41 where—

(1) The Department has not received the additional information that the applicant stated his or her intention to submit within the 40-day period described in paragraph (b) of this section, or within any additional period granted pursuant to paragraph (c) of this section;

(2) The applicant did not request a conference pursuant to § 2570.38(b) of this subpart; and

(3) The applicant has not withdrawn the application as permitted by paragraph (d) of this section.

§ 2570.40 Conferences.

(a) Any conference between the Department and an applicant pertaining to a requested exemption will be held in Washington, DC, except that a telephone conference will be held at the applicant's request.

(b) An applicant is entitled to only one conference with respect to any exemption application. An applicant will not be entitled to a conference, however, where the Department has held a hearing on the exemption under either § 2570.46 or § 2570.47 of this subpart.

(c) Insofar as possible, conferences will be scheduled as joint conferences with all applicants present where:

(1) More than one applicant has requested an exemption with respect to the same or similar types of transactions;

(2) The Department is considering the applications together as a request for a class exemption;

(3) The Department contemplates not granting the exemption; and

(4) More than one applicant has requested a conference.

(d) In instances where the applicant has requested a conference pursuant to § 2570.38(b) and also has submitted additional information pursuant to § 2570.39, the Department will schedule a conference under this section for a date and time that occurs within 20 days after the date on which the Department has provided either oral or written notification to the applicant that, after reviewing the additional information, it is still not prepared to propose the requested exemption. If, for reasons beyond its control, the applicant cannot attend a conference within the 20-day limit described in this paragraph, the applicant may request an extension of time for the scheduling of a conference, provided

that such request is made before the expiration of the 20-day limit. The Department will only grant such an extension in unusual circumstances and for a brief period as determined, respectively, by the Department in its sole discretion.

(e) In instances where the applicant has requested a conference pursuant to § 2570.38(b) but has not expressed an intent to submit additional information in support of the exemption application as provided in § 2570.39, the Department will schedule a conference under this section for a date and time that occurs within 40 days after the date of the issuance of the tentative denial letter described in § 2570.38(a). If, for reasons beyond its control, the applicant cannot attend a conference within the 40-day limit described in this paragraph, the applicant may request an extension of time for the scheduling of a conference, provided that such request is made before the expiration of the 40-day limit. The Department will only grant such an extension in unusual circumstances and for a brief period as determined, respectively, by the Department in its sole discretion.

(f) In instances where the applicant has requested a conference pursuant to § 2570.38(b) of this subpart, has notified the Department of its intent to submit additional information pursuant to § 2570.39, and has failed to furnish such information within 40 days from the date of the tentative denial letter, the Department will schedule a conference under this section for a date and time that occurs within 60 days after the date of the issuance of the tentative denial letter described in § 2570.38(a). If, for reasons beyond its control, the applicant cannot attend a conference within the 60-day limit described in this paragraph, the applicant may request an extension of time for the scheduling of a conference, provided that such request is made before the expiration of the 60-day limit. The Department will only grant such an extension in unusual circumstances and for a brief period as determined, respectively, by the Department in its sole discretion.

(g) If the applicant fails to either timely schedule or appear for a conference agreed to by the Department pursuant to this section, the applicant will be deemed to have waived its right to a conference.

(h) Within 20 days after the date of any conference held under this section, the applicant may submit to the Department (electronically or in paper form) any additional written data, arguments, or precedents discussed at the conference but not previously or adequately presented in writing. If, for reasons beyond its control, the applicant is unable to submit the additional information within this 20-day limit, the applicant may request an extension of time to furnish the information, provided that such request is made before the expiration of the 20-day limit described in this paragraph. The Department will only grant such an extension in unusual circumstances and for a brief period as determined, respectively, by the Department in its sole discretion.

§ 2570.41 Final denial letters.

The Department will issue a final denial letter denying a requested exemption where:

(a) The conditions for issuing a final denial letter specified in § 2570.38(b) or § 2570.39(e) of this subpart are satisfied;

(b) After issuing a tentative denial letter under § 2570.38 of this subpart and considering the entire record in the case, including all written information submitted pursuant to §§ 2570.39 and 2570.40 of this subpart, the Department decides not to propose an exemption or to withdraw an exemption already proposed; or

(c) After proposing an exemption and conducting a hearing on the exemption under either § 2570.46 or § 2570.47 of this subpart and after considering the entire record in the case, including the record of the hearing, the Department decides to withdraw the proposed exemption.

§ 2570.42 Notice of proposed exemption.

If the Department tentatively decides that an administrative exemption is warranted, it will publish a notice of a proposed exemption in the FEDERAL REGISTER. In addition to providing notice of the pendency of the exemption before the Department, the notice will:

(a) Explain the exemption transaction and summarize the information and reasons in support of proposing the exemption;

(b) Describe the scope of relief and any conditions of the proposed exemption;

(c) Inform interested persons of their right to submit comments to the Department (either electronically or in writing) relating to the proposed exemption and establish a deadline for receipt of such comments; and

(d) Where the proposed exemption includes relief from the prohibitions of section 406(b) of ERISA, section 4975(c)(1)(E) or (F) of the Code, or section 8477(c)(2) of FERSA, inform interested persons of their right to request a hearing under § 2570.46 of this subpart and establish a deadline for receipt of requests for such hearings.

§ 2570.43 Notification of interested persons by applicant.

(a) If a notice of proposed exemption is published in the FEDERAL REGISTER in accordance with § 2570.42 of this subpart, the applicant must notify interested persons of the pendency of the exemption in the manner and within the time period specified in the application. If the Department determines that this notification would be inadequate, the applicant must obtain the Department's consent as to the manner and time period of providing the notice to interested persons. Any such notification must include:

(1) A copy of the notice of proposed exemption as published in the FEDERAL REGISTER; and

(2) A supplemental statement in the following form:

You are hereby notified that the United States Department of Labor is considering granting an exemption from the prohibited transaction restrictions of the Employee Retirement Income Security Act of 1974, the Internal Revenue Code of 1986, or the Federal Employees' Retirement System Act of 1986. The exemption under consideration is summarized in the enclosed [Summary of Proposed Exemption, and described in greater detail in the accompanying][2] Notice of Proposed Exemption. As a person who may be affected by this exemption, you have the right to comment on the proposed exemption by [date].[3] [If you may be adversely affected by the grant of the exemption, you also have the right to request a hearing on the exemption by [date].][4]

All comments and/or requests for a hearing should be addressed to the Office of Exemption Determinations, Employee Benefits Security Administration, Room _____,[5] U.S. Department of Labor, 200 Constitution Avenue NW., Washington, DC 20210, ATTENTION: Application No._____.[6] Comments and hearing requests may also be transmitted to the Department electronically at *e-oed@dol.gov* or at *http://www.regulations.gov* (follow instructions for submission), and should prominently reference the application number listed above. In addition, comments and hearing requests may be transmitted to the Department via facsimile at (202) 219–0204. Individuals submitting comments or requests for a hearing on this matter are advised not to disclose sensitive personal data, such as social security numbers.

The Department will make no final decision on the proposed exemption until it reviews the comments received in response to the enclosed notice. If the Department decides to hold a hearing on the exemption request before making its final decision, you will be notified of the time and place of the hearing.

(b) The method used by an applicant to furnish notice to interested persons must be reasonably calculated to ensure that interested persons actually receive the notice. In all cases, personal delivery and delivery by first-class mail will be considered reasonable methods of furnishing notice. If the applicant elects to furnish notice electronically, he or she must provide

[2] To be added in instances where the Department requires the applicant to furnish a Summary of Proposed Exemption to interested persons as described in § 2570.43(d).

[3] The applicant will write in this space the date of the last day of the time period specified in the notice of proposed exemption.

[4] To be added in the case of an exemption that provides relief from section 406(b) of ERISA or corresponding sections of the Code or FERSA.

[5] The applicant will fill in the room number of the Office of Exemptions Determinations. As of the date of this final regulation, the room number of the Office of Exemption Determinations is N–5700.

[6] The applicant will fill in the exemption application number, which is stated in the notice of proposed exemption, as well as in all correspondence from the Department to the applicant regarding the application.

satisfactory proof of electronic delivery to the entire class of interested persons.

(c) After furnishing the notification described in paragraph (a) of this section, an applicant must provide the Department with a written statement confirming that notice was furnished in accordance with the foregoing requirements of this section. This statement must be accompanied by a declaration under penalty of perjury attesting to the truth of the information provided in the statement and signed by a person qualified under § 2570.34(b)(5) of this subpart to sign such a declaration. No exemption will be granted until such a statement and its accompanying declaration have been furnished to the Department.

(d) In addition to the provision of notification required by paragraph (a) of this section, the Department, in its discretion, may also require an applicant to furnish interested persons with a brief summary of the proposed exemption (Summary of Proposed Exemption), written in a manner calculated to be understood by the average recipient, which objectively describes:

(1) The exemption transaction and the parties in interest thereto;

(2) Why such transaction would violate the prohibited transaction provisions of ERISA, the Code, and/or FERSA from which relief is sought;

(3) The reasons why the plan seeks to engage in the transaction; and

(4) The conditions and safeguards proposed to protect the plan and its participants and beneficiaries from potential abuse or unnecessary risk of loss in the event the Department grants the exemption.

(e) Applicants who are required to provide interested persons with the Summary of Proposed Exemption described in paragraph (d) of this section shall furnish the Department with a copy of such summary for review and approval prior to its distribution to interested persons. Such applicants shall also provide confirmation to the Department that the Summary of Proposed Exemption was furnished to interested persons as part of the written statement and declaration required of exemption applicants by paragraph (c) of this section.

§ 2570.44 Withdrawal of exemption applications.

(a) An applicant may withdraw an application for an exemption at any time by oral or written (including electronic) notice to the Department. A withdrawn application generally shall not prejudice any subsequent applications for an exemption submitted by an applicant.

(b) Upon receiving an applicant's notice of withdrawal regarding an application for an individual exemption, the Department will confirm by letter the applicant's withdrawal of the application and will terminate all proceedings relating to the application. If a notice of proposed exemption has been published in the FEDERAL REGISTER, the Department will publish a notice withdrawing the proposed exemption.

(c) Upon receiving an applicant's notice of withdrawal regarding an application for a class exemption or for an individual exemption that is being considered with other applications as a request for a class exemption, the Department will inform any other applicants for the exemption of the withdrawal. The Department will continue to process other applications for the same exemption. If all applicants for a particular class exemption withdraw their applications, the Department may either terminate all proceedings relating to the exemption or propose the exemption on its own motion.

(d) If, following the withdrawal of an exemption application, an applicant decides to reapply for the same exemption, he or she may contact the Department in writing (including electronically) to request that the application be reinstated. The applicant should refer to the application number assigned to the original application. If, at the time the original application was withdrawn, any additional information to be submitted to the Department under § 2570.39 was outstanding, that information must accompany the request for reinstatement of the application. However, the applicant need not resubmit information previously furnished to the Department in connection with a withdrawn application unless reinstatement of the application is requested more than two years after the date of its withdrawal.

(e) Any request for reinstatement of a withdrawn application submitted, in accordance with paragraph (d) of this section, will be granted by the Department, and the Department will take whatever steps remained at the time the application was withdrawn to process the application.

§ 2570.45 Requests for reconsideration.

(a) The Department will entertain one request for reconsideration of an exemption application that has been finally denied pursuant to § 2570.41 if the applicant presents in support of the application significant new facts or arguments, which, for good reason, could not have been submitted for the Department's consideration during its initial review of the exemption application.

(b) A request for reconsideration of a previously denied application must be made within 180 days after the issuance of the final denial letter and must be accompanied by a copy of the Department's final letter denying the exemption and a statement setting forth the new information and/or arguments that provide the basis for reconsideration.

(c) A request for reconsideration must also be accompanied by a declaration under penalty of perjury attesting to the truth of the new information provided, which is signed by a person qualified under § 2570.34(b)(5) to sign such a declaration.

(d) If, after reviewing a request for reconsideration, the Department decides that the facts and arguments presented do not warrant reversal of its original decision to deny the exemption, it will send a letter to the applicant reaffirming that decision.

(e) If, after reviewing a request for reconsideration, the Department decides, based on the new facts and arguments submitted, to reconsider its final denial letter, it will notify the applicant of its intent to reconsider the application in light of the new information presented. The Department will then take whatever steps remained at the time it issued its final denial letter to process the exemption application.

(f) If, at any point during its subsequent processing of the application, the Department decides again that the exemption is unwarranted, it will issue a letter affirming its final denial.

§ 2570.46 Hearings in opposition to exemptions from restrictions on fiduciary self-dealing.

(a) Any interested person who may be adversely affected by an exemption which the Department proposes to grant from the restrictions of section 406(b) of ERISA, section 4975(c)(1)(E) or (F) of the Code, or section 8477(c)(2) of FERSA may request a hearing before the Department within the period of time specified in the FEDERAL REGISTER notice of the proposed exemption. Any such request must state:

(1) The name, address, telephone number, and email address of the person making the request;

(2) The nature of the person's interest in the exemption and the manner in which the person would be adversely affected by the exemption; and

(3) A statement of the issues to be addressed and a general description of the evidence to be presented at the hearing.

(b) The Department will grant a request for a hearing made in accordance with paragraph (a) of this section where a hearing is necessary to fully explore material factual issues identified by the person requesting the hearing. A notice of such hearing shall be published by the Department in the FEDERAL REGISTER. The Department may decline to hold a hearing where:

(1) The request for the hearing does not meet the requirements of paragraph (a) of this section;

(2) The only issues identified for exploration at the hearing are matters of law; or

(3) The factual issues identified can be fully explored through the submission of evidence in written (including electronic) form.

(c) An applicant for an exemption must notify interested persons in the event that the Department schedules a hearing on the exemption. Such notification must be given in the form, time, and manner prescribed by the Department. Ordinarily, however, adequate notification can be given by providing to interested persons a copy of the notice of hearing published by the Department in the FEDERAL REGISTER

within 10 days of its publication, using any of the methods approved in § 2570.43(b).

(d) After furnishing the notice required by paragraph (c) of this section, an applicant must submit a statement confirming that notice was given in the form, manner, and time prescribed. This statement must be accompanied by a declaration under penalty of perjury attesting to the truth of the information provided in the statement, which is signed by a person qualified under § 2570.34(b)(5) to sign such a declaration.

§ 2570.47 Other hearings.

(a) In its discretion, the Department may schedule a hearing on its own motion where it determines that issues relevant to the exemption can be most fully or expeditiously explored at a hearing. A notice of such hearing shall be published by the Department in the FEDERAL REGISTER.

(b) An applicant for an exemption must notify interested persons of any hearing on an exemption scheduled by the Department in the manner described in § 2570.46(c). In addition, the applicant must submit a statement subscribed as true under penalty of perjury like that required in § 2570.46(d).

§ 2570.48 Decision to grant exemptions.

(a) The Department may not grant an exemption under section 408(a) of ERISA, section 4975(c)(2) of the Code, or 5 U.S.C. 8477(c)(3) unless, following evaluation of the facts and representations comprising the administrative record of the proposed exemption (including any comments received in response to a notice of proposed exemption and the record of any hearing held in connection with the proposed exemption), it finds that the exemption is:

(1) Administratively feasible;

(2) In the interests of the plan (or the Thrift Savings Fund in the case of FERSA) and of its participants and beneficiaries; and

(3) Protective of the rights of participants and beneficiaries of such plan (or the Thrift Savings Fund in the case of FERSA).

(b) In each instance where the Department determines to grant an exemption, it shall publish a notice in the FEDERAL REGISTER which summarizes the transaction or transactions for which exemptive relief has been granted and specifies the conditions under which such exemptive relief is available.

§ 2570.49 Limits on the effect of exemptions.

(a) An exemption does not take effect with respect to the exemption transaction unless the material facts and representations contained in the application and in any materials and documents submitted in support of the application were true and complete.

(b) An exemption is effective only for the period of time specified and only under the conditions set forth in the exemption.

(c) Only the specific parties to whom an exemption grants relief may rely on the exemption. If the notice granting an exemption does not limit exemptive relief to specific parties, all parties to the exemption transaction may rely on the exemption.

(d) For transactions that are continuing in nature, an exemption ceases to be effective if, during the continuation of the transaction, there are material changes to the original facts and representations underlying such exemption or if one or more of the exemption's conditions cease to be met.

(e) The determination as to whether, under the totality of the facts and circumstances, a particular statement contained in (or omitted from) an exemption application constitutes a material fact or representation is made by the Department.

§ 2570.50 Revocation or modification of exemptions.

(a) If, after an exemption takes effect, changes in circumstances, including changes in law or policy, occur which call into question the continuing validity of the Department's original findings concerning the exemption, the Department may take steps to revoke or modify the exemption.

(b) Before revoking or modifying an exemption, the Department will publish a notice of its proposed action in

the FEDERAL REGISTER and provide interested persons with an opportunity to comment on the proposed revocation or modification. Prior to the publication of such notice, the applicant will be notified of the Department's proposed action and the reasons therefore. Subsequent to the publication of the notice, the applicant will have the opportunity to comment on the proposed revocation or modification.

(c) Ordinarily the revocation or modification of an exemption will have prospective effect only.

§ 2570.51 Public inspection and copies.

(a) The administrative record of each exemption will be open to public inspection and copying at the EBSA Public Disclosure Room, U.S. Department of Labor, 200 Constitution Avenue NW., Washington, DC 20210.

(b) Upon request, the staff of the Public Disclosure Room will furnish photocopies of an administrative record, or any specified portion of that record, for a specified charge per page.

§ 2570.52 Effective date.

This subpart B is effective with respect to all exemptions filed with or initiated by the Department under section 408(a) of ERISA, section 4975(c)(2) of the Code, and/or 5 U.S.C. 8477(c)(3) at any time on or after December 27, 2011. Applications for exemptions under section 408(a) of ERISA, section 4975(c)(2) of the Code, and/or 5 U.S.C. 8477(c)(3) filed on or after September 10, 1990, but before December 27, 2011 are governed by part 2570 of chapter XXV of title 29 of the Code of Federal Regulations (title 29 CFR part 2570 as revised July 1, 1991).

Subpart C—Procedures for the Assessment of Civil Penalties Under ERISA Section 502(c)(2)

SOURCE: 54 FR 26897, June 26, 1989, unless otherwise noted.

§ 2570.60 Scope of rules.

The rules of practice set forth in this subpart are applicable to ''502(c)(2) civil penalty proceedings'' (as defined in § 2570.61(n) of this subpart) under section 502(c)(2) of the Employee Retirement Income Security Act of 1974. The rules of procedure for administrative hearings published by the Department's Office of Law Judges at part 18 of this title will apply to matters arising under ERISA section 502(c)(2) except as modified by this section. These proceedings shall be conducted as expeditiously as possible, and the parties shall make every effort to avoid delay at each stage of the proceedings.

§ 2570.61 Definitions.

For 502(c)(2) civil penalty proceedings, this section shall apply in lieu of the definitions in § 18.2 of this title:

(a) *Adjudicatory proceeding* means a judicial-type proceeding before an administrative law judge leading to the formulation of a final order;

(b) *Administrative law ludge* means an administrative law judge appointed pursuant to the provisions of 5 U.S.C. 3105;

(c) *Answer* means a written statement that is supported by reference to specific circumstances or facts surrounding the notice of determination issued pursuant to § 2560.502c–2(g) of this chapter.

(d) *Commencement of proceeding* is the filing of an answer by the respondent;

(e) *Consent agreement* means any written document containing a specified proposed remedy or other relief acceptable to the Department and consenting parties;

(f) *ERISA* means the Employee Retirement Income Security Act of 1974, as amended;

(g) *Final Order* means the final decision or action of the Department of Labor concerning the assessment of a civil penalty under ERISA section 502(c)(2) against a particular party. Such final order may result from a decision of an administrative law judge or the Secretary, the failure of a party to file a statement of reasonable cause described in § 2560.502c–2(e) within the prescribed time limits, or the failure of a party to invoke the procedures for hearings or appeals under this title within the prescribed time limits. Such a final order shall constitute final agency action within the meaning of 5 U.S.C. 704;

(h) *Hearing* means that part of a proceeding which involves the submission of evidence, either by oral presentation or written submission, to the administrative law judge;

(i) *Order* means the whole or any part of a final procedural or substantive disposition of a matter under ERISA section 502(c)(2);

(j) *Party* includes a person or agency named or admitted as a party to a proceeding;

(k) *Person* includes an individual, partnership, corporation, employee benefit plan, association, exchange or other entity or organization;

(l) *Petition* means a written request, made by a person or party, for some affirmative action;

(m) *Pleading* means the notice as defined in § 2560.502c–2(g), the answer to the notice, any supplement or amendment thereto, and any reply that may be permitted to any answer, supplement or amendment;

(n) *502(c)(2) civil penalty proceeding* means an adjudicatory proceeding relating to the assessment of a civil penalty provided for in section 502(c)(2) of ERISA;

(o) *Respondent* means the party against whom the Department is seeking to assess a civil sanction under ERISA section 502(c)(2);

(p) *Secretary* means the Secretary of Labor and includes, pursuant to any delegation of authority by the Secretary, any assistant secretary (including the Assistant Secretary for Employee Benefits Security), administrator, commissioner, appellate body, board, or other official; and

(q) *Solicitor* means the Solicitor of Labor or his or her delegate.

[54 FR 26897, June 26, 1989, as amended at 68 FR 3737, Jan. 24, 2003]

§ 2570.62 Service: Copies of documents and pleadings.

For 502(c)(2) penalty proceedings, this section shall apply in lieu of § 18.3 of this title.

(a) *General*. Copies of all documents shall be served on all parties of record. All documents should clearly designate the docket number, if any, and short title of all matters. All documents to be filed shall be delivered or mailed to the Chief Docket Clerk, Office of Administrative Law Judges, 800 K Street, NW., Suite 400, Washington, DC 20001-8002, or to the OALJ Regional Office to which the proceeding may have been transferred for hearing. Each document filed shall be clear and legible.

(b) *By parties*. All motions petitions, pleadings, briefs, or other documents shall be filed with the Office of Administrative Law Judges with a copy, including any attachments, to all other parties or record. When a party is represented by an attorney, service shall be made upon the attorney. Service of any document upon any party may be made by personal delivery or by mailing a copy to the last known address. The Department shall be served by delivery to the Associate Solicitor, Plan Benefits Security Division, ERISA section 502(c)(2) Proceeding, P.O. Box 1914, Washington, DC 20013. The person serving the document shall certify to the manner and date of service.

(c) *By the Office of Administrative Law Judges*. Service of orders, decisions and all other documents shall be made by regular mail to the last known address.

(d) *Form of pleadings*. (1) Every pleading shall contain information indicating the name of the Employee Benefits Security Administration (EBSA) as the agency under which the proceeding is instituted, the title of the proceeding, the docket number (if any) assigned by the Office of Administrative Law Judges and a designation of the type of pleading or paper (e.g., notice, motion to dismiss, etc.). The pleading or paper shall be signed and shall contain the address and telephone number of the party or person representing the party. Although there are no formal specifications for documents, they should be typewritten when possible on standard size 8½ × 11 inch paper.

(2) Illegible documents, whether handwritten, typewritten, photocopies, or otherwise, will not be accepted. Papers may be reproduced by any duplicating process provided all copies are clear and legible.

[54 FR 26897, June 26, 1989, as amended at 56 FR 54708, Oct. 22, 1991]

§ 2570.63 Parties, how designated.

For 502(c)(2) civil penalty proceedings, this section shall apply in lieu of § 18.10 of this title.

(a) The term ''party'' wherever used in these rules shall include any natural person, corporation, employee benefit plan, association, firm, partnership, trustee, receiver, agency, public or private organization, or government agency. A party against whom a civil penalty is sought shall be designated as ''respondent.'' The Department shall be designated as the ''complainant.''

(b) Other persons or organizations shall be permitted to participate as parties only if the administrative law judge finds that the final decision could directly and adversely affect them or the class they represent, that they may contribute materially to the disposition of the proceedings and their interest is not adequately represented by existing parties, and that in the discretion of the administrative law judge the participation of such persons or organizations would be appropriate.

(c) A person or organization not named as a respondent wishing to participate as a party under this section shall submit a petition to the administrative law judge within fifteen (15) days after the person or organization has knowledge of or should have known about the proceeding. The petition shall be filed with the administrative law judge and served on each person or organization who has been made a party at the time of filing. Such petition shall concisely state:

(1) Petitioner's interest in the proceeding;

(2) How his or her participation as a party will contribute materially to the disposition of the proceeding;

(3) Who will appear for petitioner;

(4) The issues on which petitioner wishes to participate; and

(5) Whether petitioner intends to present witnesses.

(d) Objections to the petition may be filed by a party within fifteen (15) days of the filing of the petition. If objections to the petition are filed, the administrative law judge shall then determine whether petitioners have the requisite interest to be a party in the proceedings, as defined in paragraph (b) of this section, and shall permit or deny participation accordingly. Where petitions to participate as parties are made by individuals or groups with common interests, the administrative law judge may request all such petitioners to designate a single representative, or he or she may recognize one or more of such petitioners. The administrative law judge shall give each such petitioner as well as the parties, written notice of the decision on his or her petition. For each petition granted, the administrative law judge shall provide a brief statement of the basis of the decision. If the petition is denied, he or she shall briefly state the grounds for denial and shall then treat the petition as a request for participation as amicus curiae.

§ 2570.64 Consequences of default.

For 502(c)(2) civil penalty proceedings, this section shall apply in lieu of § 18.5(a) and (b) of this title. Failure of the respondent to file an answer to the notice of determination described in § 2560.502c–2(g) of this chapter within the 30 day period provided by § 2560.502c–2(h) of this chapter shall be deemed to constitute a waiver of his or her right to appear and contest the allegations of the notice of determination, and such failure shall be deemed to be an admission of the facts as alleged in the notice for purposes of any proceeding involving the assessment of a civil penalty under section 502(c)(2) of the Act. Such notice shall then become the final order of the Secretary, within the meaning of § 2570.61(g) of this subpart, forty-five (45) days from the date of service of the notice.

[68 FR 3737, Jan. 24, 2003]

§ 2570.65 Consent order or settlement.

For 502(c)(2) civil penalty proceedings, the following shall apply in lieu of § 18.9 of this title.

(a) *General.* At any time after the commencement of a proceeding, but at least five (5) days prior to the date set for hearing, the parties jointly may move to defer the hearing for a reasonable time to permit negotiation of a settlement or an agreement containing findings and an order disposing of the whole or any part of the proceeding. The allowance of such and the duration thereof shall be in the discretion of the administrative law judge, after consideration of such factors as the nature of the proceeding, the requirements of the public interest, the representations of

the parties and the probability of reaching an agreement which will result in a just disposition of the issues involved.

(b) *Content*. Any agreement containing consent findings and an order disposing of a proceeding or any part thereof shall also provide:

(1) That the order shall have the same force and effect as an order made after full hearing;

(2) That the entire record on which any order may be based shall consist solely of the notice and the agreement;

(3) A waiver of any further procedural steps before the administrative law judge;

(4) A waiver of any right to challenge or contest the validity of the order and decision entered into in accordance with the agreement; and

(5) That the order and decision of the administrative law judge shall be final agency action.

(c) *Submission*. On or before the expiration of the time granted for negotiations, but, in any case, at least five (5) days prior to the date set for hearing, the parties or their authorized representative or their counsel may:

(1) Submit the proposed agreement containing consent findings and an order to the administrative law judge; or

(2) Notify the administrative law judge that the parties have reached a full settlement and have agreed to dismissal of the action subject to compliance with the terms of the settlement; or

(3) Inform the administrative law judge that agreement cannot be reached.

(d) *Disposition*. In the event a settlement agreement containing consent findings and an order is submitted within the time allowed therefore, the administrative law judge shall issue a decision incorporating such findings and agreement within thirty (30) days of his receipt of such document. The decision of the administrative law judge shall incorporate all of the findings, terms, and conditions of the settlement agreement and consent order of the parties. Such decision shall become final agency action within the meaning of 5 U.S.C. 704.

(e) *Settlement without consent of all parties*. In cases in which some, but not all, of the parties to a proceeding submit a consent agreement to the administrative law judge, the following procedure shall apply:

(1) If all of the parties have not consented to the proposed settlement submitted to the administrative law judge, then such non-consenting parties must receive notice, and a copy, of the proposed settlement at the time it is submitted to the administrative law judge;

(2) Any non-consenting party shall have fifteen (15) days to file any objections to the proposed settlement with the administrative law judge and all other parties;

(3) If any party submits an objection to the proposed settlement, the administrative law judge shall decide within thirty (30) days after receipt of such objections whether he shall sign or reject the proposed settlement. Where the record lacks substantial evidence upon which to base a decision or there is a genuine issue of material fact, then the administrative law judge may establish procedures for the purpose of receiving additional evidence upon which a decision on the contested issues may reasonably be based;

(4) If there are no objections to the proposed settlement, or if the administrative law judge decides to sign the proposed settlement after reviewing any such objections, the administrative law judge shall incorporate the consent agreement into a decision meeting the requirements of paragraph (d) of this section.

§ 2570.66 Scope of discovery.

For 502(c)(2) civil penalty proceedings, this section shall apply in lieu of § 18.14 of this title.

(a) A party may file a motion to conduct discovery with the administrative law judge. The motion for discovery shall be granted by the administrative law judge only upon a showing of good cause. In order to establish ''good cause'' for the purposes of this section, a party must show that the discovery requested relates to a genuine issue as to a material fact that is relevant to the proceeding. The order of the administrative law judge shall expressly limit the scope and terms of discovery

to that for which ''good cause'' has been shown, as provided in this paragraph.

(b) A party may obtain discovery of documents and tangible things otherwise discoverable under paragraph (a) of this section and prepared in anticipation of or for the hearing by or for another party's representative (including his or her attorney, consultant, surety, indemnitor, insurer, or agent) only upon showing that the party seeking discovery has substantial need of the materials or information in the preparation of his or her case and that he or she is unable without undue hardship to obtain the substantial equivalent of the materials or information by other means. In ordering discovery of such materials when the required showing has been made, the administrative law judge shall protect against disclosure of the mental impressions, conclusions, opinions, or legal theories of an attorney or other representatives of a party concerning the proceeding.

§ 2570.67 Summary decision.

For 502(c)(2) civil penalty proceedings, this section shall apply in lieu of § 18.41 of this title.

(a) *No genuine issue of material of fact.* (1) Where no issue of a material of fact is found to have been raised, the administrative law judge may issue a decision which, in the absence of an appeal pursuant to §§ 2570.69 through 2570.71 of this subpart, shall become a final order.

(2) A decision made under this paragraph shall include a statement of:

(i) Findings of fact and conclusions of law, and the reasons therefor, on all issues presented; and

(ii) Any terms and conditions of the rule or order.

(3) A copy of any decision under this paragraph shall be served on each party.

(b) *Hearings on issues of fact.* Where a genuine question of material of fact is raised, the administrative law judge shall, and in any other case may, set the case for an evidentiary hearing.

§ 2570.68 Decision of the administrative law judge.

For 502(c)(2) civil penalty proceedings, this section shall apply in lieu of § 18.57 of this title.

(a) *Proposed findings of fact, conclusions, and order.* Within twenty (20) days of the filing of the transcript of the testimony of such additional time as the administrative law judge may allow, each party may file with the administrative law judge, subject to the judge's discretion, proposed findings of fact, conclusions of law, and order together with a supporting brief expressing the reasons for such proposals. Such proposals and briefs shall be served on all parties, and shall refer to all portions of the record and to all authorities relied upon in support of each proposal.

(b) *Decision of the administative law judge.* Within a reasonable time after the time allowed for the filing of the proposed findings of fact, conclusions of law, and order, or within thirty (30) days after receipt of an agreement containing consent findings and order disposing of the disputed matter in whole, the administrative law judge shall make his or her decision. The decision of the administrative law judge shall include findings of fact and conclusions of law with reasons therefor upon each material issue of fact or law presented on the record. The decision of the administrative law judge shall be based upon the whole record. In a contested case in which the Department and the Respondent have presented their positions to the administrative law judge pursuant to the procedures for 502(c)(2) civil penalty proceedings as set forth in this subpart, the penalty (if any) which may be included in the decision of the administrative law judge shall be limited to the penalty expressly provided for in section 502(c)(2) of ERISA. It shall be supported by reliable and probative evidence. The decision of the administrative law judge shall become final agency action within the meaning of 5 U.S.C. 704 unless an appeal is made pursuant to the procedures set forth in §§ 2570.69 through 2570.71.

§ 2570.69 Review by the Secretary.

(a) The Secretary may review a decision of an administrative law judge.

Such a review may occur only when a party files a notice of appeal from a decision of an administrative law judge within twenty (20) days of the issuance of such decision. In all other cases, the decision of the administrative law judge shall become final agency action within the meaning of 5 U.S.C. 704.

(b) A notice of appeal to the Secretary shall state with specificity the issue(s) in the decision of the administrative law judge on which the party is seeking review. Such notice of appeal must be served on all parties of record.

(c) Upon receipt of a notice of appeal, the Secretary shall request the Chief Administrative Law Judge to submit to him or her a copy of the entire record before the administrative law judge.

§ 2570.70 Scope of review.

The review of the Secretary shall not be *de novo* proceeding but rather a review of the record established before the administrative law judge. There shall be no opportunity for oral argument.

§ 2570.71 Procedures for review by the Secretary.

(a) Upon receipt of the notice of appeal, the Secretary shall establish a briefing schedule which shall be served on all parties of record. Upon motion of one or more of the parties, the Secretary may, in his or her discretion, permit the submission of reply briefs.

(b) The Secretary shall issue a decision as promptly as possible after receipt of the briefs of the parties. The Secretary may affirm, modify, or set aside, in whole or in part, the decision on appeal and shall issue a statement of reasons and bases for the action(s) taken. Such decision by the Secretary shall be final agency action within the meaning of 5 U.S.C. 704.

Subpart D—Procedure for the Assessment of Civil Penalties Under ERISA Section 502(l)

SOURCE: 55 FR 25286, June 20, 1990, unless otherwise noted.

§ 2570.80 Scope of rules.

The rules of practice set forth in this subpart are applicable to ''502(l) civil penalty proceedings'' (as defined in § 2570.82 of this subpart) under section 502(l) of the Employee Retirement Income Security Act of 1974 (ERISA or the Act). Refer to 29 CFR 2560.502–1 for the definition of the relevant terms of ERISA section 502(l).

§ 2570.81 In general.

Section 502(l) of the Employee Retirement Income Security Act of 1974 (ERISA or the Act) requires the Secretary of Labor to assess a civil penalty against a fiduciary who breaches a fiduciary responsibility under, or commits any other violation of, part 4 of title I of ERISA or any other person who knowingly participates in such breach or violation. The penalty under section 502(l) is equal to 20 percent of the ''applicable recovery amount'' paid pursuant to any settlement agreement with the Secretary or ordered by a court to be paid in a judicial proceeding instituted by the Secretary under section 502 (a)(2) or (a)(5). The Secretary may, in the Secretary's sole discretion, waive or reduce the penalty if the Secretary determines in writing that:

(a) The fiduciary or other person acted reasonably and in good faith, or

(b) It is reasonable to expect that the fiduciary or other person will not be able to restore all losses to the plan or any participant or beneficiary of such plan without severe financial hardship unless such waiver or reduction is granted.

The penalty imposed on a fiduciary or other person with respect to any transaction shall be reduced by the amount of any penalty or tax imposed on such fiduciary or other person with respect to such transaction under section 502(i) or section 4975 of the Internal Revenue Code of 1986 (the Code).

§ 2570.82 Definitions.

For purposes of this section:

(a) *502(l) civil penalty proceedings* means an adjudicatory proceeding relating to the assessment of a civil penalty provided in section 502(l) of ERISA;

(b) *Notice of assessment* means any document, however designated, issued by the Secretary which contains a specified assessment, in monetary terms, of a civil penalty under ERISA section 502(l). A ''notice of assessment'' will contain a brief factual description of the violation for which the assessment is being made, the identity of the person being assessed, and the amount of the assessment and the basis for assessing that particular person that particular penalty amount;

(c) *Person* includes an individual, partnership, corporation, employee benefit plan, association, exchange or other entity or organization;

(d) *Petition* means a written request, made by a person, for a waiver or reduction of the civil penalty described herein; and

(e) *Secretary* means the Secretary of Labor and includes, pursuant to any delegation of authority by the Secretary, the Assistant Secretary for Employee Benefits Security, Regional Directors for Employee Benefits Security, or Deputy Regional Directors for Employee Benefits Security.

[55 FR 25286, June 20, 1990, as amended at 68 FR 16400, Apr. 3, 2003]

§ 2570.83 Assessment of civil penalty.

(a) Except as described in §§ 2570.85 and 2570.86 of this part, subsequent to the payment of the applicable recovery amount pursuant to either a settlement agreement or a court order, the Secretary shall serve on the person liable for making such payment a notice of assessment of civil penalty equal to 20 percent of the applicable recovery amount.

(b) Service of such notice shall be made either:

(1) By delivering a copy to the person being assessed; if the person is an individual, to the individual; if the person is a partnership, to any partner; if the person is a corporation, association, exchange, or other entity or organization, to any officer of such entity; if the person is an employee benefit plan, to a trustee of such plan; or to any attorney representing any such person;

(2) By leaving a copy at the principal office, place of business, or residence of such individual, partner, officer, trustee, or attorney; or

(3) By mailing a copy to the last known address of such individual, partner, officer, trustee, or attorney.

If service is accomplished by certified mail, service is complete upon mailing. If done by regular mail, service is complete upon receipt by the addressee.

§ 2570.84 Payment of civil penalty.

(a) The civil penalty must be paid within 60 days of service of the notice of assessment.

(b) At any time prior to the expiration of the payment period for the assessed penalty, any person who has committed, or knowingly participated in, a breach or violation, or has been alleged by the Secretary to have so committed or participated, may submit a written request for a conference with the Secretary to discuss the calculation of the assessed penalty. A person will be entitled under this section to one such conference per assessment. If such written request is submitted during the 60 day payment period described in subparagraph (a), such a request will not toll the running of that payment period.

(c) The notice of assessment will become a final order (within the meaning of 5 U.S.C. 704) on the first day following the 60 day payment period, subject to any tolling caused by a petition to waive or reduce described in § 2570.85.

§ 2570.85 Waiver or reduction of civil penalty.

(a) At any time prior to the expiration of the payment period for the assessed penalty, any person who has committed, or knowingly participated in, a breach or violation, or has been alleged by the Secretary to have so committed or participated, may petition the Secretary to waive or reduce the penalty under this section on the basis that:

(1) The person acted reasonably and in good faith in engaging in the breach or violation; or

(2) The person will not be able to restore all losses to the plan or participant or beneficiary of such plan without severe financial hardship unless such waiver or reduction is granted.

(b) All petitions for waiver or reduction shall be in writing and contain the following information:

(1) The name of the petitioner(s);

(2) A detailed description of the breach or violation which is the subject of the penalty;

(3) A detailed recitation of the facts which support one, or both, of the bases for waiver or reduction described in § 2570.85(a) of this part, accompanied by underlying documentation supporting such factual allegations;

(4) A declaration, signed and dated by the petitioner(s), in the following form:

Under penalty of perjury, I declare that, to the best of my knowledge and belief, the representations made in this petition are true and correct.

(c) If a petition for waiver or reduction is submitted during the 60 day payment period described in § 2570.84(a) of this part, the payment period for the penalty in question will be tolled pending Departmental consideration of the petition. During such consideration, the applicant is entitled to one conference with the Secretary, but the Secretary, in his or her sole discretion, may schedule or hold additional conferences with the petitioner concerning the factual allegations contained in the petition.

(d) Based solely on his or her discretion, the Secretary will determine whether to grant such a waiver or reduction. Pursuant to the procedure described in § 2570.83(b), the petitioner will be served with a written determination informing him or her of the Secretary's decision. Such written determination shall briefly state the grounds for the Secretary's decision, and shall be final and non-reviewable. In the case of a determination not to waive, the payment period for the penalty in question, if previously initiated, will resume as of the date of service of the Secretary's written determination.

§ 2570.86 Reduction of penalty by other penalty assessments.

The penalty assessed on a person pursuant to this section with respect to any transaction shall be reduced by the amount of any penalty or tax imposed on such person with respect to such transaction under ERISA section 502(i) and section 4975 of the Code. Prior to a reduction of penalty under this paragraph, the person being assessed must provide proof to the Department of the payment of the penalty or tax and the amount of that payment. Submissions of proof of other penalty or tax assessments will not toll the 60 day payment period, if previously initiated.

§ 2570.87 Revision of assessment.

If, based on the procedures described in § 2570.84, 2570.85, or 2570.86, the assessed penalty amount is revised, the person being assessed will receive a revised notice of assessment and will be obligated to pay the revised assessed penalty within the relevant 60 day payment period (as determined by the applicable procedure in § 2570.84, 2570.85, or 2570.86), and, if necessary, any excess penalty payment will be refunded as soon as administratively feasible. The revised notice of assessment will revoke any previously issued notice of assessment with regard to the transaction in question and will become a final order (within the meaning of 5 U.S.C. 704) the later of the first day following the 60 day payment period or the date of its service on the person being assessed, pursuant to the service procedures described in § 2570.83(b).

§ 2570.88 Effective date.

This section is effective June 20, 1990, and shall apply to assessments under section 502(l) made by the Secretary after June 20, 1990, based on any breach or violation occurring on or after December 19, 1989.

Subpart E—Procedures for the Assessment of Civil Penalties Under ERISA Section 502(c)(5)

SOURCE: 68 FR 17508, Apr. 9, 2003, unless otherwise noted.

§ 2570.90 Scope of rules.

The rules of practice set forth in this subpart are applicable to ''502(c)(5) civil penalty proceedings'' (as defined in 2570.91(n)) under section 502(c)(5) of the Employee Retirement Income Security Act of 1974. The rules of procedure for administrative hearings published by the Department's Office of Administrative Law Judges in subpart

A of 29 CFR part 18 will apply to matters arising under ERISA section 502(c)(5) except as described by this section. These proceedings shall be conducted as expeditiously as possible, and the parties shall make every effort to avoid delay at each stage of the proceedings.

§ 2570.91 Definitions.

For 502(c)(5) civil penalty proceedings, this section shall apply in lieu of the definitions in § 18.2 of this title.

(a) *Adjudicatory proceeding* means a judicial-type proceeding before an administrative law judge leading to the formulation of a final order;

(b) *Administrative law judge* means an administrative law judge appointed pursuant to the provisions of 5 U.S.C. 3105;

(c) *Answer* means a written statement that is supported by reference to specific circumstances or facts surrounding the notice of determination issued pursuant to 29 CFR 2560.502c–5(g);

(d) *Commencement of proceeding* is the filing of an answer by the respondent;

(e) *Consent agreement* means any written document containing a specified proposed remedy or other relief acceptable to the Department and consenting parties;

(f) *ERISA* means the Employee Retirement Income Security Act of 1974, as amended;

(g) *Final order* means the final decision or action of the Department of Labor concerning the assessment of a civil penalty under ERISA section 502(c)(5) against a particular party. Such final order may result from a decision of an administrative law judge or the Secretary, the failure of a party to file a statement of reasonable cause described in 29 CFR 2560.502c–5(e) within the prescribed time limits, or the failure of a party to invoke the procedures for hearings or appeals under this title within the prescribed time limits. Such a final order shall constitute final agency action within the meaning of 5 U.S.C. 704;

(h) *Hearing* means that part of a proceeding which involves the submission of evidence, either by oral presentation or written submission, to the administrative law judge;

(i) *Order* means the whole or any part of a final procedural or substantive disposition of a matter under ERISA section 502(c)(5);

(j) *Party* includes a person or agency named or admitted as a party to a proceeding;

(k) *Person* includes an individual, partnership, corporation, employee benefit plan, association, exchange, or other entity or organization;

(l) *Petition* means a written request, made by a person or party, for some affirmative action;

(m) *Pleading* means the notice as defined in 29 CFR 2560.502c–5(g), the answer to the notice, any supplement or amendment thereto, and any reply that may be permitted to any answer, supplement or amendment;

(n) *502(c)(5) civil penalty proceeding* means an adjudicatory proceeding relating to the assessment of a civil penalty provided for in section 502(c)(5) of ERISA;

(o) *Respondent* means the party against whom the Department is seeking to assess a civil sanction under ERISA section 502(c)(5);

(p) *Secretary* means the Secretary of Labor and includes, pursuant to any delegation of authority by the Secretary, any assistant secretary (including the Assistant Secretary for Employee Benefits Security), administrator, commissioner, appellate body, board, or other official of the Department of Labor; and

(q) *Solicitor* means the Solicitor of Labor or his or her delegate.

§ 2570.92 Service: Copies of documents and pleadings.

For 502(c)(5) penalty proceedings, this section shall apply in lieu of 29 CFR 18.3.

(a) *In general.* Copies of all documents shall be served on all parties of record. All documents should clearly designate the docket number, if any, and short title of all matters. All documents to be filed shall be delivered or mailed to the Chief Docket Clerk, Office of Administrative Law Judges (OALJ), 800 K Street, NW., Suite 400, Washington, DC 20001–8002, or to the OALJ Regional Office to which the proceeding may have

been transferred for hearing. Each document filed shall be clear and legible.

(b) *By parties.* All motions, petitions, pleadings, briefs, or other documents shall be filed with the Office of Administrative Law Judges with a copy, including any attachments, to all other parties of record. When a party is represented by an attorney, service shall be made upon the attorney. Service of any document upon any party may be made by personal delivery or by mailing a copy to the last known address. The Department shall be served by delivery to the Associate Solicitor, Plan Benefits Security Division, ERISA Section 502(c)(5) Proceeding, P.O. Box 1914, Washington, DC 20013. The person serving the document shall certify to the manner and date of service.

(c) *By the Office of Administrative Law Judges.* Service of orders, decisions and all other documents shall be made by regular mail to the last known address.

(d) *Form of pleadings*—(1) Every pleading shall contain information indicating the name of the Employee Benefits Security Administration (EBSA) as the agency under which the proceeding is instituted, the title of the proceeding, the docket number (if any) assigned by the Office of Administrative Law Judges and a designation of the type of pleading or paper (e.g., notice, motion to dismiss, etc.). The pleading or paper shall be signed and shall contain the address and telephone number of the party or person representing the party. Although there are no formal specifications for documents, they should be typewritten when possible on standard size 8½ × 11 inch paper.

(2) Illegible documents, whether handwritten, typewritten, photocopies, or otherwise, will not be accepted. Papers may be reproduced by any duplicating process provided all copies are clear and legible.

§ 2570.93 Parties, how designated.

For 502(c)(5) civil penalty proceedings, this section shall apply in lieu of 29 CFR 18.10.

(a) The term *party* wherever used in this subpart shall include any natural person, corporation, employee benefit plan, association, firm, partnership, trustee, receiver, agency, public or private organization, or government agency. A party against whom a civil penalty is sought shall be designated as ''respondent.'' The Department shall be designated as the ''complainant.''

(b) Other persons or organizations shall be permitted to participate as parties only if the administrative law judge finds that the final decision could directly and adversely affect them or the class they represent, that they may contribute materially to the disposition of the proceedings and their interest is not adequately represented by existing parties, and that in the discretion of the administrative law judge the participation of such persons or organizations would be appropriate.

(c) A person or organization not named as a respondent wishing to participate as a party under this section shall submit a petition to the administrative law judge within fifteen (15) days after the person or organization has knowledge of or should have known about the proceeding. The petition shall be filed with the administrative law judge and served on each person or organization who has been made a party at the time of filing. Such petition shall concisely state:

(1) Petitioner's interest in the proceeding;

(2) How his or her participation as a party will contribute materially to the disposition of the proceeding;

(3) Who will appear for petitioner;

(4) The issues on which petitioner wishes to participate; and

(5) Whether petitioner intends to present witnesses.

(d) Objections to the petition may be filed by a party within fifteen (15) days of the filing of the petition. If objections to the petition are filed, the administrative law judge shall then determine whether petitioners have the requisite interest to be a party in the proceedings, as defined in paragraph (b) of this section, and shall permit or deny participation accordingly. Where petitions to participate as parties are made by individuals or groups with common interests, the administrative law judge may request all such petitioners to designate a single representative, or he or she may recognize one or more of such petitioners. The administrative law judge shall give each such petitioner as well as the parties,

written notice of the decision on his or her petition. For each petition granted, the administrative law judge shall provide a brief statement of the basis of the decision. If the petition is denied, he or she shall briefly state the grounds for denial and shall then treat the petition as a request for participation as amicus curiae.

§ 2570.94 Consequences of default.

For 502(c)(5) civil penalty proceedings, this section shall apply in lieu of 29 CFR 18.5(a) and (b). Failure of the respondent to file an answer to the notice of determination described in 29 CFR 2560.502c–5(g) within the 30 day period provided by 29 CFR 2560.502c–5(h) shall be deemed to constitute a waiver of his or her right to appear and contest the allegations of the notice of determination, and such failure shall be deemed to be an admission of the facts as alleged in the notice for purposes of any proceeding involving the assessment of a civil penalty under section 502(c)(5) of the Act. Such notice shall then become a final order of the Secretary, within the meaning of § 2570.91(g), forty-five (45) days from the date of the service of the notice.

§ 2570.95 Consent order or settlement.

For 502(c)(5) civil penalty proceedings, the following shall apply in lieu of 29 CFR 18.9.

(a) *In general.* At any time after the commencement of a proceeding, but at least five (5) days prior to the date set for hearing, the parties jointly may move to defer the hearing for a reasonable time to permit negotiation of a settlement or an agreement containing findings and an order disposing of the whole or any part of the proceeding. The allowance of such deferment and the duration thereof shall be in the discretion of the administrative law judge, after consideration of such factors as the nature of the proceeding, the requirements of the public interest, the representations of the parties and the probability of reaching an agreement which will result in a just disposition of the issues involved.

(b) *Content.* Any agreement containing consent findings and an order disposing of a proceeding or any part thereof shall also provide:

(1) That the order shall have the same force and effect as an order made after full hearing;

(2) That the entire record on which any order may be based shall consist solely of the notice and the agreement;

(3) A waiver of any further procedural steps before the administrative law judge;

(4) A waiver of any right to challenge or contest the validity of the order and decision entered into in accordance with the agreement; and

(5) That the order and decision of the administrative law judge shall be final agency action.

(c) *Submission.* On or before the expiration of the time granted for negotiations, but, in any case, at least five (5) days prior to the date set for hearing, the parties or their authorized representative or their counsel may:

(1) Submit the proposed agreement containing consent findings and an order to the administrative law judge;

(2) Notify the administrative law judge that the parties have reached a full settlement and have agreed to dismissal of the action subject to compliance with the terms of the settlement; or

(3) Inform the administrative law judge that agreement cannot be reached.

(d) *Disposition.* In the event that a settlement agreement containing consent findings and an order is submitted within the time allowed therefor, the administrative law judge shall issue a decision incorporating such findings and agreement within thirty (30) days of receipt of such document. The decision of the administrative law judge shall incorporate all of the findings, terms, and conditions of the settlement agreement and consent order of the parties. Such decision shall become a final agency action within the meaning of 5 U.S.C. 704.

(e) *Settlement without consent of all parties.* In cases in which some, but not all, of the parties to a proceeding submit a consent agreement to the administrative law judge, the following procedure shall apply:

(1) If all of the parties have not consented to the proposed settlement submitted to the administrative law judge, then such non-consenting parties must

receive notice, and a copy, of the proposed settlement at the time it is submitted to the administrative law judge;

(2) Any non-consenting party shall have fifteen (15) days to file any objections to the proposed settlement with the administrative law judge and all other parties;

(3) If any party submits an objection to the proposed settlement, the administrative law judge shall decide within thirty (30) days after receipt of such objections whether to sign or reject the proposed settlement. Where the record lacks substantial evidence upon which to base a decision or there is a genuine issue of material fact, then the administrative law judge may establish procedures for the purpose of receiving additional evidence upon which a decision on the contested issues may reasonably be based;

(4) If there are no objections to the proposed settlement, or if the administrative law judge decides to sign the proposed settlement after reviewing any such objections, the administrative law judge shall incorporate the consent agreement into a decision meeting the requirements of paragraph (d) of this section.

§ 2570.96 Scope of discovery.

For 502(c)(5) civil penalty proceedings, this section shall apply in lieu of 29 CFR 18.14.

(a) A party may file a motion to conduct discovery with the administrative law judge. The motion for discovery shall be granted by the administrative law judge only upon a showing of good cause. In order to establish ''good cause'' for the purposes of this section, a party must show that the discovery requested relates to a genuine issue as to a material fact that is relevant to the proceeding. The order of the administrative law judge shall expressly limit the scope and terms of discovery to that for which ''good cause'' has been shown, as provided in this paragraph.

(b) A party may obtain discovery of documents and tangible things otherwise discoverable under paragraph (a) of this section and prepared in anticipation of or for the hearing by or for another party's representative (including his or her attorney, consultant, surety, indemnitor, insurer, or agent) only upon showing that the party seeking discovery has substantial need of the materials or information in the preparation of his or her case and that he or she is unable without undue hardship to obtain the substantial equivalent of the materials or information by other means. In ordering discovery of such materials when the required showing has been made, the administrative law judge shall protect against disclosure of the mental impressions, conclusions, opinions, or legal theories of an attorney or other representative of a party concerning the proceeding.

§ 2570.97 Summary decision.

For 502(c)(5) civil penalty proceedings, this section shall apply in lieu of 29 CFR 18.41.

(a) *No genuine issue of material fact.* (1) Where no issue of material fact is found to have been raised, the administrative law judge may issue a decision which, in the absence of an appeal pursuant to §§ 2570.99 through 2570.101, shall become a final order.

(2) A decision made under this paragraph shall include a statement of:

(i) Findings of fact and conclusions of law, and the reasons therefore, on all issues presented; and

(ii) Any terms and conditions of the rule or order.

(3) A copy of any decision under this paragraph shall be served on each party.

(b) *Hearings on issues of fact.* Where a genuine question of material fact is raised, the administrative law judge shall, and in any other case may, set the case for an evidentiary hearing.

§ 2570.98 Decision of the administrative law judge.

For 502(c)(5) civil penalty proceedings, this section shall apply in lieu of 29 CFR 18.57.

(a) *Proposed findings of fact, conclusions, and order.* Within twenty (20) days of the filing of the transcript of the testimony or such additional time as the administrative law judge may allow, each party may file with the administrative law judge, subject to the judge's discretion, proposed findings of fact, conclusions of law, and an order

together with a supporting brief expressing the reasons for such proposals. Such proposals and briefs shall be served on all parties, and shall refer to all portions of the record and to all authorities relied upon in support of each proposal.

(b) *Decision of the administrative law judge.* Within a reasonable time after the time allowed for the filing of the proposed findings of fact, conclusions of law, and order, or within thirty (30) days after receipt of an agreement containing consent findings and an order disposing of the disputed matter in whole, the administrative law judge shall make his or her decision. The decision of the administrative law judge shall include findings of fact and conclusions of law with reasons therefor upon each material issue of fact or law presented on the record. The decision of the administrative law judge shall be based upon the whole record. In a contested case in which the Department and the Respondent have presented their positions to the administrative law judge pursuant to the procedures for 502(c)(5) civil penalty proceedings as set forth in this subpart, the penalty (if any) which may be included in the decision of the administrative law judge shall be limited to the penalty expressly provided for in section 502(c)(5) of ERISA. It shall be supported by reliable and probative evidence. The decision of the administrative law judge shall become a final agency action within the meaning of 5 U.S.C. 704 unless an appeal is made pursuant to the procedures set forth in §§ 2570.99 through 2570.101.

§ 2570.99 Review by the Secretary.

(a) The Secretary may review a decision of an administrative law judge. Such a review may occur only when a party files a notice of appeal from a decision of an administrative law judge within twenty (20) days of the issuance of such decision. In all other cases, the decision of the administrative law judge shall become final agency action within the meaning of 5 U.S.C. 704.

(b) A notice of appeal to the Secretary shall state with specificity the issue(s) in the decision of the administrative law judge on which the party is seeking review. Such notice of appeal must be served on all parties of record.

(c) Upon receipt of a notice of appeal, the Secretary shall request the Chief Administrative Law Judge to submit to him or her a copy of the entire record before the administrative law judge.

§ 2570.100 Scope of review.

The review of the Secretary shall not be a *de novo* proceeding but rather a review of the record established before the administrative law judge. There shall be no opportunity for oral argument.

§ 2570.101 Procedures for review by the Secretary.

(a) Upon receipt of the notice of appeal, the Secretary shall establish a briefing schedule which shall be served on all parties of record. Upon motion of one or more of the parties, the Secretary may, in his or her discretion, permit the submission of reply briefs.

(b) The Secretary shall issue a decision as promptly as possible after receipt of the briefs of the parties. The Secretary may affirm, modify, or set aside, in whole or in part, the decision on appeal and shall issue a statement of reasons and bases for the action(s) taken. Such decision by the Secretary shall be final agency action within the meaning of 5 U.S.C. 704.

Subpart F—Procedures for the Assessment of Civil Penalties Under ERISA Section 502(c)(6)

SOURCE: 67 FR 786, Jan. 7, 2002, unless otherwise noted.

§ 2570.110 Scope of rules.

The rules of practice set forth in this subpart are applicable to ''502(c)(6) civil penalty proceedings'' (as defined in § 2570.111(n) of this subpart) under section 502(c)(6) of the Employee Retirement Income Security Act of 1974. The rules of procedure for administrative hearings published by the Department's Office of Law Judges at Part 18 of this title will apply to matters arising under ERISA section 502(c)(6) except as modified by this section. These

proceedings shall be conducted as expeditiously as possible, and the parties shall make every effort to avoid delay at each stage of the proceedings.

§ 2570.111 Definitions.

For section 502(c)(6) civil penalty proceedings, this section shall apply in lieu of the definitions in § 18.2 of this title:

(a) *Adjudicatory proceeding* means a judicial-type proceeding before an administrative law judge leading to the formulation of a final order;

(b) *Administrative law judge* means an administrative law judge appointed pursuant to the provisions of 5 U.S.C. 3105;

(c) *Answer* means a written statement that is supported by reference to specific circumstances or facts surrounding the notice of determination issued pursuant to § 2560.502c–6(g) of this chapter;

(d) *Commencement of proceeding* is the filing of an answer by the respondent;

(e) *Consent agreement* means any written document containing a specified proposed remedy or other relief acceptable to the Department and consenting parties;

(f) *ERISA* means the Employee Retirement Income Security Act of 1974, as amended;

(g) *Final order* means the final decision or action of the Department of Labor concerning the assessment of a civil penalty under ERISA section 502(c)(6) against a particular party. Such final order may result from a decision of an administrative law judge or the Secretary, the failure of a party to file a statement of matters reasonably beyond the control of the plan administrator described in § 2560.502c–6(e) of this chapter within the prescribed time limits, or the failure of a party to invoke the procedures for hearings or appeals under this title within the prescribed time limits. Such a final order shall constitute final agency action within the meaning of 5 U.S.C. 704;

(h) *Hearing* means that part of a proceeding which involves the submission of evidence, either by oral presentation or written submission, to the administrative law judge;

(i) *Order* means the whole or any part of a final procedural or substantive disposition of a matter under ERISA section 502(c)(6);

(j) *Party* includes a person or agency named or admitted as a party to a proceeding;

(k) *Person* includes an individual, partnership, corporation, employee benefit plan, association, exchange or other entity or organization;

(l) *Petition* means a written request, made by a person or party, for some affirmative action;

(m) *Pleading* means the notice as defined in § 2560.502c–6(g) of this chapter, the answer to the notice, any supplement or amendment thereto, and any reply that may be permitted to any answer, supplement or amendment;

(n) *502(c)(6) civil penalty proceeding* means an adjudicatory proceeding relating to the assessment of a civil penalty provided for in section 502(c)(6) of ERISA;

(o) *Respondent* means the party against whom the Department is seeking to assess a civil sanction under ERISA section 502(c)(6);

(p) *Secretary* means the Secretary of Labor and includes, pursuant to any delegation of authority by the Secretary, any assistant secretary (including the Assistant Secretary for Employee Benefits Security), administrator, commissioner, appellate body, board, or other official; and

(q) *Solicitor* means the Solicitor of Labor or his or her delegate.

§ 2570.112 Service: Copies of documents and pleadings.

For 502(c)(6) penalty proceedings, this section shall apply in lieu of § 18.3 of this title.

(a) *General.* Copies of all documents shall be served on all parties of record. All documents should clearly designate the docket number, if any, and short title of all matters. All documents to be filed shall be delivered or mailed to the Chief Docket Clerk, Office of Administrative Law Judges, 800 K Street, NW., Suite 400, Washington, DC 20001–8002, or to the OALJ Regional Office to which the proceeding may have been transferred for hearing. Each document filed shall be clear and legible.

(b) *By parties.* All motions, petitions, pleadings, briefs, or other documents

shall be filed with the Office of Administrative Law Judges with a copy, including any attachments, to all other parties of record. When a party is represented by an attorney, service shall be made upon the attorney. Service of any document upon any party may be made by personal delivery or by mailing a copy to the last known address. The Department shall be served by delivery to the Associate Solicitor, Plan Benefits Security Division, ERISA section 502(c)(6) Proceeding, P.O. Box 1914, Washington, DC 20013. The person serving the document shall certify to the manner and date of service.

(c) *By the Office of Administrative Law Judges.* Service of orders, decisions and all other documents shall be made by regular mail to the last known address.

(d) *Form of pleadings.* (1) Every pleading shall contain information indicating the name of the Employee Benefits Security Administration (EBSA) as the agency under which the proceeding is instituted, the title of the proceeding, the docket number (if any) assigned by the Office of Administrative Law Judges and a designation of the type of pleading or paper (e.g., notice, motion to dismiss, etc.). The pleading or paper shall be signed and shall contain the address and telephone number of the party or person representing the party. Although there are no formal specifications for documents, they should be typewritten when possible on standard size 8½ × 11 inch paper.

(2) Illegible documents, whether handwritten, typewritten, photocopied, or otherwise, will not be accepted. Papers may be reproduced by any duplicating process provided all copies are clear and legible.

§ 2570.113 Parties, how designated.

For 502(c)(6) civil penalty proceedings, this section shall apply in lieu of § 18.10 of this title.

(a) The term ''party'' wherever used in this subpart shall include any natural person, corporation, employee benefit plan, association, firm, partnership, trustee, receiver, agency, public or private organization, or government agency. A party against whom a civil penalty is sought shall be designated as ''respondent''. The Department shall be designated as the ''complainant''.

(b) Other persons or organizations shall be permitted to participate as parties only if the administrative law judge finds that the final decision could directly and adversely affect them or the class they represent, that they may contribute materially to the disposition of the proceedings and their interest is not adequately represented by existing parties, and that in the discretion of the administrative law judge the participation of such persons or organizations would be appropriate.

(c) A person or organization not named as a respondent wishing to participate as a party under this section shall submit a petition to the administrative law judge within fifteen (15) days after the person or organization has knowledge of or should have known about the proceeding. The petition shall be filed with the administrative law judge and served on each person or organization who has been made a party at the time of filing. Such petition shall concisely state:

(1) Petitioner's interest in the proceeding;

(2) How his or her participation as a party will contribute materially to the disposition of the proceeding;

(3) Who will appear for petitioner;

(4) The issues on which petitioner wishes to participate; and

(5) Whether petitioner intends to present witnesses.

(d) Objections to the petition may be filed by a party within fifteen (15) days of the filing of the petition. If objections to the petition are filed, the administrative law judge shall then determine whether petitioner has the requisite interest to be a party in the proceedings, as defined in paragraph (b) of this section, and shall permit or deny participation accordingly. Where petitions to participate as parties are made by individuals or groups with common interests, the administrative law judge may request all such petitioners to designate a single representative, or he or she may recognize one or more of such petitioners. The administrative law judge shall give each such petitioner, as well as the parties, written notice of the decision on his or her petition. For each petition granted, the administrative law judge shall provide a brief statement of the basis of

the decision. If the petition is denied, he or she shall briefly state the grounds for denial and shall then treat the petition as a request for participation as amicus curiae.

§ 2570.114 Consequences of default.

For 502(c)(6) civil penalty proceedings, this section shall apply in lieu of § 18.5(a) and (b) of this title. Failure of the respondent to file an answer to the notice of determination described in § 2560.502c–6(g) of this chapter within the 30 day period provided by § 2560.502c–6(h) of this chapter shall be deemed to constitute a waiver of his or her right to appear and contest the allegations of the notice of determination, and such failure shall be deemed to be an admission of the facts as alleged in the notice for purposes of any proceeding involving the assessment of a civil penalty under section 502(c)(6) of the Act. Such notice shall then become the final order of the Secretary, within the meaning of § 2570.111(g) of this subpart, forty-five (45) days from the date of service of the notice.

[68 FR 3738, Jan. 24, 2003]

§ 2570.115 Consent order or settlement.

For 502(c)(6) civil penalty proceedings, the following shall apply in lieu of § 18.9 of this title.

(a) *General.* At any time after the commencement of a proceeding, but at least five (5) days prior to the date set for hearing, the parties jointly may move to defer the hearing for a reasonable time to permit negotiation of a settlement or an agreement containing findings and an order disposing of the whole or any part of the proceeding. The allowance of such a deferral and the duration thereof shall be in the discretion of the administrative law judge, after consideration of such factors as the nature of the proceeding, the requirements of the public interest, the representations of the parties, and the probability of reaching an agreement which will result in a just disposition of the issues involved.

(b) *Content.* Any agreement containing consent findings and an order disposing of a proceeding or any part thereof shall also provide:

(1) That the order shall have the same force and effect as an order made after full hearing;

(2) That the entire record on which any order may be based shall consist solely of the notice and the agreement;

(3) A waiver of any further procedural steps before the administrative law judge;

(4) A waiver of any right to challenge or contest the validity of the order and decision entered into in accordance with the agreement; and

(5) That the order and decision of the administrative law judge shall be final agency action.

(c) *Submission.* On or before the expiration of the time granted for negotiations, but, in any case, at least five (5) days prior to the date set for hearing, the parties or their authorized representative or their counsel may:

(1) Submit the proposed agreement containing consent findings and an order to the administrative law judge; or

(2) Notify the administrative law judge that the parties have reached a full settlement and have agreed to dismissal of the action subject to compliance with the terms of the settlement; or

(3) Inform the administrative law judge that agreement cannot be reached.

(d) *Disposition.* In the event a settlement agreement containing consent findings and an order is submitted within the time allowed therefor, the administrative law judge shall issue a decision incorporating such findings and agreement within 30 days of his receipt of such document. The decision of the administrative law judge shall incorporate all of the findings, terms, and conditions of the settlement agreement and consent order of the parties. Such decision shall become final agency action within the meaning of 5 U.S.C. 704.

(e) *Settlement without consent of all parties.* In cases in which some, but not all, of the parties to a proceeding submit a consent agreement to the administrative law judge, the following procedure shall apply:

(1) If all of the parties have not consented to the proposed settlement submitted to the administrative law judge,

then such non-consenting parties must receive notice, and a copy, of the proposed settlement at the time it is submitted to the administrative law judge;

(2) Any non-consenting party shall have fifteen (15) days to file any objections to the proposed settlement with the administrative law judge and all other parties;

(3) If any party submits an objection to the proposed settlement, the administrative law judge shall decide within 30 days after receipt of such objections whether he shall sign or reject the proposed settlement. Where the record lacks substantial evidence upon which to base a decision or there is a genuine issue of material fact, then the administrative law judge may establish procedures for the purpose of receiving additional evidence upon which a decision on the contested issues may reasonably be based;

(4) If there are no objections to the proposed settlement, or if the administrative law judge decides to sign the proposed settlement after reviewing any such objections, the administrative law judge shall incorporate the consent agreement into a decision meeting the requirements of paragraph (d) of this section.

§ 2570.116 Scope of discovery.

For 502(c)(6) civil penalty proceedings, this section shall apply in lieu of § 18.14 of this title.

(a) A party may file a motion to conduct discovery with the administrative law judge. The motion for discovery shall be granted by the administrative law judge only upon a showing of good cause. In order to establish ''good cause'' for the purposes of this section, a party must show that the discovery requested relates to a genuine issue as to a material fact that is relevant to the proceeding. The order of the administrative law judge shall expressly limit the scope and terms of discovery to that for which ''good cause'' has been shown, as provided in this paragraph.

(b) A party may obtain discovery of documents and tangible things otherwise discoverable under paragraph (a) of this section and prepared in anticipation of or for the hearing by or for another party's representative (including his or her attorney, consultant, surety, indemnitor, insurer, or agent) only upon showing that the party seeking discovery has substantial need of the materials or information in the preparation of his or her case and that he or she is unable without undue hardship to obtain the substantial equivalent of the materials or information by other means. In ordering discovery of such materials when the required showing has been made, the administrative law judge shall protect against disclosure of the mental impressions, conclusions, opinions, or legal theories of an attorney or other representatives of a party concerning the proceeding.

§ 2570.117 Summary decision.

For 502(c)(6) civil penalty proceedings, this section shall apply in lieu of § 18.41 of this title.

(a) *No genuine issue of material fact.* (1) Where no issue of a material fact is found to have been raised, the administrative law judge may issue a decision which, in the absence of an appeal pursuant to §§ 2570.119 through 2570.121 of this subpart, shall become a final order.

(2) A decision made under this paragraph (a) shall include a statement of:

(i) Findings of fact and conclusions of law, and the reasons therefor, on all issues presented; and

(ii) Any terms and conditions of the rule or order.

(3) A copy of any decision under this paragraph shall be served on each party.

(b) *Hearings on issues of fact.* Where a genuine question of a material fact is raised, the administrative law judge shall, and in any other case may, set the case for an evidentiary hearing.

§ 2570.118 Decision of the administrative law judge.

For 502(c)(6) civil penalty proceedings, this section shall apply in lieu of § 18.57 of this title.

(a) *Proposed findings of fact, conclusions, and order.* Within twenty (20) days of the filing of the transcript of the testimony, or such additional time as the administrative law judge may allow, each party may file with the administrative law judge, subject to the judge's discretion, proposed findings of

fact, conclusions of law, and order together with a supporting brief expressing the reasons for such proposals. Such proposals and briefs shall be served on all parties, and shall refer to all portions of the record and to all authorities relied upon in support of each proposal.

(b) *Decision of the administrative law judge.* Within a reasonable time after the time allowed for the filing of the proposed findings of fact, conclusions of law, and order, or within 30 days after receipt of an agreement containing consent findings and order disposing of the disputed matter in whole, the administrative law judge shall make his or her decision. The decision of the administrative law judge shall include findings of fact and conclusions of law with reasons therefor upon each material issue of fact or law presented on the record. The decision of the administrative law judge shall be based upon the whole record. In a contested case in which the Department and the Respondent have presented their positions to the administrative law judge pursuant to the procedures for 502(c)(6) civil penalty proceedings as set forth in this subpart, the penalty (if any) which may be included in the decision of the administrative law judge shall be limited to the penalty expressly provided for in section 502(c)(6) of ERISA. It shall be supported by reliable and probative evidence. The decision of the administrative law judge shall become final agency action within the meaning of 5 U.S.C. 704 unless an appeal is made pursuant to the procedures set forth in §§ 2570.119 through 2570.121.

§ 2570.119 Review by the Secretary.

(a) The Secretary may review a decision of an administrative law judge. Such a review may occur only when a party files a notice of appeal from a decision of an administrative law judge within twenty (20) days of the issuance of such decision. In all other cases, the decision of the administrative law judge shall become final agency action within the meaning of 5 U.S.C. 704.

(b) A notice of appeal to the Secretary shall state with specificity the issue(s) in the decision of the administrative law judge on which the party is seeking review. Such notice of appeal must be served on all parties of record.

(c) Upon receipt of a notice of appeal, the Secretary shall request the Chief Administrative Law Judge to submit to him or her a copy of the entire record before the administrative law judge.

§ 2570.120 Scope of review.

The review of the Secretary shall not be a *de novo* proceeding but rather a review of the record established before the administrative law judge. There shall be no opportunity for oral argument.

§ 2570.121 Procedures for review by the Secretary.

(a) Upon receipt of the notice of appeal, the Secretary shall establish a briefing schedule which shall be served on all parties of record. Upon motion of one or more of the parties, the Secretary may, in his or her discretion, permit the submission of reply briefs.

(b) The Secretary shall issue a decision as promptly as possible after receipt of the briefs of the parties. The Secretary may affirm, modify, or set aside, in whole or in part, the decision on appeal and shall issue a statement of reasons and bases for the action(s) taken. Such decision by the Secretary shall be final agency action within the meaning of 5 U.S.C. 704.

Subpart G—Procedures for the Assessment of Civil Penalties Under ERISA Section 502(c)(7)

SOURCE: 68 FR 3738, Jan. 24, 2003, unless otherwise noted.

§ 2570.130 Scope of rules.

The rules of practice set forth in this subpart are applicable to ''502(c)(7) civil penalty proceedings'' (as defined in § 2570.131(n) of this subpart) under section 502(c)(7) of the Employee Retirement Income Security Act of 1974, as amended (the Act). The rules of procedure for administrative hearings published by the Department's Office of Administrative Law Judges at Part 18

of this title will apply to matters arising under ERISA section 502(c)(7) except as modified by this subpart. These proceedings shall be conducted as expeditiously as possible, and the parties shall make every effort to avoid delay at each stage of the proceedings.

§ 2570.131 Definitions.

For 502(c)(7) civil penalty proceedings, this section shall apply in lieu of the definitions in § 18.2 of this title:

(a) *Adjudicatory proceeding* means a judicial-type proceeding before an administrative law judge leading to the formulation of a final order;

(b) *Administrative law judge* means an administrative law judge appointed pursuant to the provisions of 5 U.S.C. 3105;

(c) *Answer* means a written statement that is supported by reference to specific circumstances or facts surrounding the notice of determination issued pursuant to § 2560.502c–7(g) of this chapter;

(d) *Commencement of proceeding* is the filing of an answer by the respondent;

(e) *Consent agreement* means any written document containing a specified proposed remedy or other relief acceptable to the Department and consenting parties;

(f) *ERISA* means the Employee Retirement Income Security Act of 1974, as amended;

(g) *Final order* means the final decision or action of the Department of Labor concerning the assessment of a civil penalty under ERISA section 502(c)(7) against a particular party. Such final order may result from a decision of an administrative law judge or the Secretary, the failure of a party to file a statement of reasonable cause described in § 2560.502c–7(e) of this chapter within the prescribed time limits, or the failure of a party to invoke the procedures for hearings or appeals under this title within the prescribed time limits. Such a final order shall constitute final agency action within the meaning of 5 U.S.C. 704;

(h) *Hearing* means that part of a proceeding which involves the submission of evidence, by either oral presentation or written submission, to the administrative law judge;

(i) *Order* means the whole or any part of a final procedural or substantive disposition of a matter under ERISA section 502(c)(7);

(j) *Party* includes a person or agency named or admitted as a party to a proceeding;

(k) *Person* includes an individual, partnership, corporation, employee benefit plan, association, exchange or other entity or organization;

(l) *Petition* means a written request, made by a person or party, for some affirmative action;

(m) *Pleading* means the notice as defined in § 2560.502c–7(g) of this chapter, the answer to the notice, any supplement or amendment thereto, and any reply that may be permitted to any answer, supplement or amendment;

(n) *502(c)(7) civil penalty proceeding* means an adjudicatory proceeding relating to the assessment of a civil penalty provided for in section 502(c)(7) of ERISA;

(o) *Respondent* means the party against whom the Department is seeking to assess a civil sanction under ERISA section 502(c)(7);

(p) *Secretary* means the Secretary of Labor and includes, pursuant to any delegation of authority by the Secretary, any assistant secretary (including the Assistant Secretary for Employee Benefits Security), administrator, commissioner, appellate body, board, or other official; and

(q) *Solicitor* means the Solicitor of Labor or his or her delegate.

§ 2570.132 Service: Copies of documents and pleadings.

For 502(c)(7) penalty proceedings, this section shall apply in lieu of § 18.3 of this title.

(a) *General.* Copies of all documents shall be served on all parties of record. All documents should clearly designate the docket number, if any, and short title of all matters. All documents to be filed shall be delivered or mailed to the Chief Docket Clerk, Office of Administrative Law Judges, 800 K Street, NW., Suite 400, Washington, DC 20001–8002, or to the OALJ Regional Office to which the proceeding may have been transferred for hearing. Each document filed shall be clear and legible.

(b) *By parties*. All motions, petitions, pleadings, briefs, or other documents shall be filed with the Office of Administrative Law Judges with a copy, including any attachments, to all other parties of record. When a party is represented by an attorney, service shall be made upon the attorney. Service of any document upon any party may be made by personal delivery or by mailing a copy to the last known address. The Department shall be served by delivery to the Associate Solicitor, Plan Benefits Security Division, ERISA section 502(c)(7) Proceeding, P.O. Box 1914, Washington, DC 20013. The person serving the document shall certify to the manner and date of service.

(c) *By the Office of Administrative Law Judges*. Service of orders, decisions and all other documents shall be made by regular mail to the last known address.

(d) *Form of pleadings*. (1) Every pleading shall contain information indicating the name of the Employee Benefits Security Administration (EBSA) as the agency under which the proceeding is instituted, the title of the proceeding, the docket number (if any) assigned by the Office of Administrative Law Judges and a designation of the type of pleading or paper (e.g., notice, motion to dismiss, etc.). The pleading or paper shall be signed and shall contain the address and telephone number of the party or person representing the party. Although there are no formal specifications for documents, they should be typewritten when possible on standard size 8½ × 11 inch paper.

(2) Illegible documents, whether handwritten, typewritten, photocopied, or otherwise, will not be accepted. Papers may be reproduced by any duplicating process provided all copies are clear and legible.

§ 2570.133 Parties, how designated.

For 502(c)(7) civil penalty proceedings, this section shall apply in lieu of § 18.10 of this title.

(a) The term ''party'' wherever used in this subpart shall include any natural person, corporation, employee benefit plan, association, firm, partnership, trustee, receiver, agency, public or private organization, or government agency. A party against whom a civil penalty is sought shall be designated as ''respondent.'' The Department shall be designated as the ''complainant.''

(b) Other persons or organizations shall be permitted to participate as parties only if the administrative law judge finds that the final decision could directly and adversely affect them or the class they represent, that they may contribute materially to the disposition of the proceedings and their interest is not adequately represented by existing parties, and that in the discretion of the administrative law judge the participation of such persons or organizations would be appropriate.

(c) A person or organization not named as a respondent wishing to participate as a party under this section shall submit a petition to the administrative law judge within fifteen (15) days after the person or organization has knowledge of or should have known about the proceeding. The petition shall be filed with the administrative law judge and served on each person who or organization that has been made a party at the time of filing. Such petition shall concisely state:

(1) Petitioner's interest in the proceeding;

(2) How his or her participation as a party will contribute materially to the disposition of the proceeding;

(3) Who will appear for petitioner;

(4) The issues on which petitioner wishes to participate; and

(5) Whether petitioner intends to present witnesses.

(d) Objections to the petition may be filed by a party within fifteen (15) days of the filing of the petition. If objections to the petition are filed, the administrative law judge shall then determine whether petitioner has the requisite interest to be a party in the proceedings, as defined in paragraph (b) of this section, and shall permit or deny participation accordingly. Where petitions to participate as parties are made by individuals or groups with common interests, the administrative law judge may request all such petitioners to designate a single representative, or he or she may recognize one or more of such petitioners. The administrative law judge shall give each such petitioner, as well as the parties, written notice of the decision on his or her petition. For each petition granted,

the administrative law judge shall provide a brief statement of the basis of the decision. If the petition is denied, he or she shall briefly state the grounds for denial and shall then treat the petition as a request for participation as *amicus curiae*.

§ 2570.134 Consequences of default.

For 502(c)(7) civil penalty proceedings, this section shall apply in lieu of § 18.5(a) and (b) of this title. Failure of the respondent to file an answer to the notice of determination described in § 2560.502c–7(g) of this chapter within the 30 day period provided by § 2560.502c–7(h) of this chapter shall be deemed to constitute a waiver of his or her right to appear and contest the allegations of the notice of determination, and such failure shall be deemed to be an admission of the facts as alleged in the notice for purposes of any proceeding involving the assessment of a civil penalty under section 502(c)(7) of the Act. Such notice shall then become the final order of the Secretary, within the meaning of § 2570.131(g) of this subpart, forty-five (45) days from the date of service of the notice.

§ 2570.135 Consent order or settlement.

For 502(c)(7) civil penalty proceedings, the following shall apply in lieu of § 18.9 of this title.

(a) *General*. At any time after the commencement of a proceeding, but at least five (5) days prior to the date set for hearing, the parties jointly may move to defer the hearing for a reasonable time to permit negotiation of a settlement or an agreement containing findings and an order disposing of the whole or any part of the proceeding. The allowance of such a deferral and the duration thereof shall be in the discretion of the administrative law judge, after consideration of such factors as the nature of the proceeding, the requirements of the public interest, the representations of the parties, and the probability of reaching an agreement which will result in a just disposition of the issues involved.

(b) *Content*. Any agreement containing consent findings and an order disposing of a proceeding or any part thereof shall also provide:

(1) That the order shall have the same force and effect as an order made after full hearing;

(2) That the entire record on which any order may be based shall consist solely of the notice and the agreement;

(3) A waiver of any further procedural steps before the administrative law judge;

(4) A waiver of any right to challenge or contest the validity of the order and decision entered into in accordance with the agreement; and

(5) That the order and decision of the administrative law judge shall be final agency action.

(c) *Submission*. On or before the expiration of the time granted for negotiations, but, in any case, at least five (5) days prior to the date set for hearing, the parties or their authorized representative or their counsel may:

(1) Submit the proposed agreement containing consent findings and an order to the administrative law judge; or

(2) Notify the administrative law judge that the parties have reached a full settlement and have agreed to dismissal of the action subject to compliance with the terms of the settlement; or

(3) Inform the administrative law judge that agreement cannot be reached.

(d) *Disposition*. In the event a settlement agreement containing consent findings and an order is submitted within the time allowed therefor, the administrative law judge shall issue a decision incorporating such findings and agreement within 30 days of his receipt of such document. The decision of the administrative law judge shall incorporate all of the findings, terms, and conditions of the settlement agreement and consent order of the parties. Such decision shall become final agency action within the meaning of 5 U.S.C. 704.

(e) *Settlement without consent of all parties*. In cases in which some, but not all, of the parties to a proceeding submit a consent agreement to the administrative law judge, the following procedure shall apply:

(1) If all of the parties have not consented to the proposed settlement submitted to the administrative law judge,

then such non-consenting parties must receive notice, and a copy, of the proposed settlement at the time it is submitted to the administrative law judge;

(2) Any non-consenting party shall have fifteen (15) days to file any objections to the proposed settlement with the administrative law judge and all other parties;

(3) If any party submits an objection to the proposed settlement, the administrative law judge shall decide within 30 days after receipt of such objections whether he shall sign or reject the proposed settlement. Where the record lacks substantial evidence upon which to base a decision or there is a genuine issue of material fact, then the administrative law judge may establish procedures for the purpose of receiving additional evidence upon which a decision on the contested issues may reasonably be based;

(4) If there are no objections to the proposed settlement, or if the administrative law judge decides to sign the proposed settlement after reviewing any such objections, the administrative law judge shall incorporate the consent agreement into a decision meeting the requirements of paragraph (d) of this section.

§ 2570.136 Scope of discovery.

For 502(c)(7) civil penalty proceedings, this section shall apply in lieu of § 18.14 of this title.

(a) A party may file a motion to conduct discovery with the administrative law judge. The motion for discovery shall be granted by the administrative law judge only upon a showing of good cause. In order to establish ''good cause'' for the purposes of this section, a party must show that the discovery requested relates to a genuine issue as to a material fact that is relevant to the proceeding. The order of the administrative law judge shall expressly limit the scope and terms of discovery to that for which ''good cause'' has been shown, as provided in this paragraph.

(b) A party may obtain discovery of documents and tangible things otherwise discoverable under paragraph (a) of this section and prepared in anticipation of or for the hearing by or for another party's representative (including his or her attorney, consultant, surety, indemnitor, insurer, or agent) only upon showing that the party seeking discovery has substantial need of the materials or information in the preparation of his or her case and that he or she is unable without undue hardship to obtain the substantial equivalent of the materials or information by other means. In ordering discovery of such materials when the required showing has been made, the administrative law judge shall protect against disclosure of the mental impressions, conclusions, opinions, or legal theories of an attorney or other representatives of a party concerning the proceeding.

§ 2570.137 Summary decision.

For 502(c)(7) civil penalty proceedings, this section shall apply in lieu of § 18.41 of this title.

(a) *No genuine issue of material fact.* (1) Where no issue of a material fact is found to have been raised, the administrative law judge may issue a decision which, in the absence of an appeal pursuant to §§ 2570.139 through 2570.141 of this subpart, shall become a final order.

(2) A decision made under paragraph (a) of this section shall include a statement of:

(i) Findings of fact and conclusions of law, and the reasons therefor, on all issues presented; and

(ii) Any terms and conditions of the rule or order.

(3) A copy of any decision under this paragraph shall be served on each party.

(b) *Hearings on issues of fact.* Where a genuine question of a material fact is raised, the administrative law judge shall, and in any other case may, set the case for an evidentiary hearing.

§ 2570.138 Decision of the administrative law judge.

For 502(c)(7) civil penalty proceedings, this section shall apply in lieu of § 18.57 of this title.

(a) *Proposed findings of fact, conclusions, and order.* Within twenty (20) days of the filing of the transcript of the testimony, or such additional time as the administrative law judge may allow, each party may file with the administrative law judge, subject to the

judge's discretion, proposed findings of fact, conclusions of law, and order together with a supporting brief expressing the reasons for such proposals. Such proposals and briefs shall be served on all parties, and shall refer to all portions of the record and to all authorities relied upon in support of each proposal.

(b) *Decision of the administrative law judge.* Within a reasonable time after the time allowed for the filing of the proposed findings of fact, conclusions of law, and order, or within thirty (30) days after receipt of an agreement containing consent findings and order disposing of the disputed matter in whole, the administrative law judge shall make his or her decision. The decision of the administrative law judge shall include findings of fact and conclusions of law with reasons therefor upon each material issue of fact or law presented on the record. The decision of the administrative law judge shall be based upon the whole record. In a contested case in which the Department and the Respondent have presented their positions to the administrative law judge pursuant to the procedures for 502(c)(7) civil penalty proceedings as set forth in this subpart, the penalty (if any) which may be included in the decision of the administrative law judge shall be limited to the penalty expressly provided for in section 502(c)(7) of ERISA. It shall be supported by reliable and probative evidence. The decision of the administrative law judge shall become final agency action within the meaning of 5 U.S.C. 704 unless an appeal is made pursuant to the procedures set forth in §§ 2570.139 through 2570.141 of this subpart.

§ 2570.139 Review by the Secretary.

(a) The Secretary may review a decision of an administrative law judge. Such a review may occur only when a party files a notice of appeal from a decision of an administrative law judge within twenty (20) days of the issuance of such decision. In all other cases, the decision of the administrative law judge shall become final agency action within the meaning of 5 U.S.C. 704.

(b) A notice of appeal to the Secretary shall state with specificity the issue(s) in the decision of the administrative law judge on which the party is seeking review. Such notice of appeal must be served on all parties of record.

(c) Upon receipt of a notice of appeal, the Secretary shall request the Chief Administrative Law Judge to submit to him or her a copy of the entire record before the administrative law judge.

§ 2570.140 Scope of review.

The review of the Secretary shall not be a de novo proceeding but rather a review of the record established before the administrative law judge. There shall be no opportunity for oral argument.

§ 2570.141 Procedures for review by the Secretary.

(a) Upon receipt of the notice of appeal, the Secretary shall establish a briefing schedule which shall be served on all parties of record. Upon motion of one or more of the parties, the Secretary may, in his or her discretion, permit the submission of reply briefs.

(b) The Secretary shall issue a decision as promptly as possible after receipt of the briefs of the parties. The Secretary may affirm, modify, or set aside, in whole or in part, the decision on appeal and shall issue a statement of reasons and bases for the action(s) taken. Such decision by the Secretary shall be final agency action within the meaning of 5 U.S.C. 704.

Subpart H—Procedures for Issuance of Findings Under ERISA Sec. 3(40)

SOURCE: 68 FR 17489, Apr. 9, 2003, unless otherwise noted.

§ 2570.150 Scope of rules.

The rules of practice set forth in this subpart H apply to ''section 3(40) Finding Proceedings'' (as defined in § 2570.152(g)), under section 3(40) of the Employee Retirement Income Security Act of 1974 (ERISA or the Act). Refer to 29 CFR 2510.3–40 for the definition of relevant terms of section 3(40) of ERISA, 29 U.S.C. 1002(40). To the extent that the regulations in this subpart differ from the regulations in subpart A of 29 CFR part 18, the regulations in this

subpart apply to matters arising under section 3(40) of ERISA rather than the rules of procedure for administrative hearings published by the Department's Office of Administrative Law Judges in subpart A of 29 CFR part 18. These proceedings shall be conducted as expeditiously as possible, and the parties shall make every effort to avoid delay at each stage of the proceedings.

§ 2570.151 In general.

If there is an attempt to assert state jurisdiction or the application of state law, either by the issuance of a state administrative or court subpoena to, or the initiation of administrative or judicial proceedings against, a plan or other arrangement that alleges it is covered by title I of ERISA, 29 U.S.C. 1003, the plan or other arrangement may petition the Secretary to make a finding under section 3(40)(A)(i) of ERISA that it is a plan established or maintained under or pursuant to an agreement or agreements that the Secretary finds to be collective bargaining agreements for purposes of section 3(40) of ERISA.

§ 2570.152 Definitions.

For section 3(40) Finding Proceedings, this section shall apply instead of the definitions in 29 CFR 18.2.

(a) *ERISA* means the Employee Retirement Income Security Act of 1974, *et seq.*, 29 U.S.C. 1001, *et seq.*, as amended.

(b) *Order* means the whole or part of a final procedural or substantive disposition by the administrative law judge of a matter under section 3(40) of ERISA. No order will be appealable to the Secretary except as provided in this subpart.

(c) *Petition* means a written request under the procedures in this subpart for a finding by the Secretary under section 3(40) of ERISA that a plan is established or maintained under or pursuant to one or more collective bargaining agreements.

(d) *Petitioner* means the plan or arrangement filing a petition.

(e) *Respondent* means:

(1) A state government instrumentality charged with enforcing the law that is alleged to apply or which has been identified as asserting jurisdiction over a plan or other arrangement, including any agency, commission, board, or committee charged with investigating and enforcing state insurance laws, including parties joined under § 2570.153;

(2) The person or entity asserting that state law or state jurisdiction applies to the petitioner;

(3) The Secretary of Labor; and

(4) A state not named in the petition that has intervened under § 2570.153(b).

(f) *Secretary* means the Secretary of Labor, and includes, pursuant to any delegation or sub-delegation of authority, the Assistant Secretary for Employee Benefits Security or other employee of the Employee Benefits Security Administration.

(g) *Section 3(40) Finding Proceeding* means a proceeding before the Office of Administrative Law Judges (OALJ) relating to whether the Secretary finds an entity to be a plan to be established or maintained under or pursuant to one or more collective bargaining agreements within the meaning of section 3(40) of ERISA.

§ 2570.153 Parties.

For section 3(40) Finding Proceedings, this section shall apply instead of 29 CFR 18.10.

(a) The term ''party'' with respect to a Section 3(40) Finding Proceeding means the petitioner and the respondents.

(b) States not named in the petition may participate as parties in a Section 3(40) Finding Proceeding by notifying the OALJ and the other parties in writing prior to the date for filing a response to the petition. After the date for service of responses to the petition, a state not named in the petition may intervene as a party only with the consent of all parties or as otherwise ordered by the ALJ.

(c) The Secretary of Labor shall be named as a ''respondent'' to all actions.

(d) The failure of any party to comply with any order of the ALJ may, at the discretion of the ALJ, result in the denial of the opportunity to present evidence in the proceeding.

§ 2570.154 Filing and contents of petition.

(a) A person seeking a finding under section 3(40) of ERISA must file a written petition by delivering or mailing it to the Chief Docket Clerk, Office of Administrative Law Judges (OALJ), 800 K Street, NW., Suite 400, Washington, DC 20001–8002, or by making a filing by any electronic means permitted under procedures established by the OALJ.

(b) The petition shall—

(1) Provide the name and address of the entity for which the petition is filed;

(2) Provide the names and addresses of the plan administrator and plan sponsor(s) of the plan or other arrangement for which the finding is sought;

(3) Identify the state or states whose law or jurisdiction the petitioner claims has been asserted over the petitioner, and provide the addresses and names of responsible officials;

(4) Include affidavits or other written evidence showing that:

(i) State jurisdiction has been asserted over or legal process commenced against the petitioner pursuant to state law;

(ii) The petitioner is an employee welfare benefit plan as defined at section 3(1) of ERISA (29 U.S.C. 1002(1)) and 29 CFR 2510.3–1 and is covered by title I of ERISA (*see* 29 U.S.C. 1003);

(iii) The petitioner is established or maintained for the purpose of offering or providing benefits described in section 3(1) of ERISA (29 U.S.C. 1002(1)) to employees of two or more employers (including one or more self-employed individuals) or their beneficiaries;

(iv) The petitioner satisfies the criteria in 29 CFR 2510.3–40(b); and

(v) Service has been made as provided in § 2570.155.

(5) The affidavits shall set forth such facts as would be admissible in evidence in a proceeding under 29 CFR part 18 and shall show affirmatively that the affiant is competent to testify to the matters stated therein. The affidavit or other written evidence must set forth specific facts showing the factors required under paragraph (b)(4) of this section.

§ 2570.155 Service.

For section 3(40) proceedings, this section shall apply instead of 29 CFR 18.3.

(a) *In general.* Copies of all documents shall be served on all parties of record. All documents should clearly designate the docket number, if any, and short title of all matters. All documents to be filed shall be delivered or mailed to the Chief Docket Clerk, Office of Administrative Law Judges (OALJ), 800 K Street, NW., Suite 400, Washington, DC 20001–8002, or to the OALJ Regional Office to which the proceeding may have been transferred for hearing. Each document filed shall be clear and legible.

(b) *By parties.* All motions, petitions, pleadings, briefs, or other documents shall be filed with the Office of Administrative Law Judges with a copy, including any attachments, to all other parties of record. When a party is represented by an attorney, service shall be made upon the attorney. Service of any document upon any party may be made by personal delivery or by mailing by first class, prepaid U.S. mail, a copy to the last known address. The Secretary shall be served by delivery to the Associate Solicitor, Plan Benefits Security Division, ERISA Section 3(40) Proceeding, PO Box 1914, Washington, DC 20013. The person serving the document shall certify to the manner and date of service.

(c) *By the Office of Administrative Law Judges.* Service of orders, decisions and all other documents shall be made to all parties of record by regular mail to their last known address.

(d) *Form of pleadings* (1) Every pleading shall contain information indicating the name of the Employee Benefits Security Administration (EBSA) as the agency under which the proceeding is instituted, the title of the proceeding, the docket number (if any) assigned by the OALJ and a designation of the type of pleading or paper (e.g., notice, motion to dismiss, etc.). The pleading or paper shall be signed and shall contain the address and telephone number of the party or person representing the party. Although there are no formal specifications for documents, they should be typewritten when possible on standard size 8½ × 11 inch paper.

(2) Illegible documents, whether handwritten, typewritten, photocopies, or otherwise, will not be accepted. Papers may be reproduced by any duplicating process provided all copies are clear and legible.

§ 2570.156 Expedited proceedings.

For section 3(40) Finding Proceedings, this section shall apply instead of 29 CFR 18.42.

(a) At any time after commencement of a proceeding, any party may move to advance the scheduling of a proceeding, including the time for conducting discovery.

(b) Except when such proceedings are directed by the Chief Administrative Law Judge or the administrative law judge assigned, any party filing a motion under this section shall:

(1) Make the motion in writing;

(2) Describe the circumstances justifying advancement;

(3) Describe the irreparable harm that would result if the motion is not granted; and

(4) Incorporate in the motion affidavits to support any representations of fact.

(c) Service of a motion under this section shall be accomplished by personal delivery, or by facsimile, followed by first class, prepaid, U.S. mail. Service is complete upon personal delivery or mailing.

(d) Except when such proceedings are required, or unless otherwise directed by the Chief Administrative Law Judge or the administrative law judge assigned, all parties to the proceeding in which the motion is filed shall have ten (10) days from the date of service of the motion to file an opposition in response to the motion.

(e) Following the timely receipt by the administrative law judge of statements in response to the motion, the administrative law judge may advance pleading schedules, discovery schedules, prehearing conferences, and the hearing, as deemed appropriate; provided, however, that a hearing on the merits shall not be scheduled with less than five (5) working days notice to the parties, unless all parties consent to an earlier hearing.

(f) When an expedited hearing is held, the decision of the administrative law judge shall be issued within twenty (20) days after receipt of the transcript of any oral hearing or within twenty (20) days after the filing of all documentary evidence if no oral hearing is conducted.

§ 2570.157 Allocation of burden of proof.

For purposes of a final decision under § 2570.158 (Decision of the Administrative Law Judge) or § 2570.159 (Review by the Secretary), the petitioner shall have the burden of proof as to whether it meets 29 CFR 2510.3–40.

§ 2570.158 Decision of the Administrative Law Judge.

For section 3(40) finding proceedings, this section shall apply instead of 29 CFR 18.57.

(a) *Proposed findings of fact, conclusions of law, and order.* Within twenty (20) days of filing the transcript of the testimony, or such additional time as the administrative law judge may allow, each party may file with the administrative law judge, subject to the judge's discretion under 29 CFR 18.55, proposed findings of fact, conclusions of law, and order together with the supporting brief expressing the reasons for such proposals. Such proposals and brief shall be served on all parties, and shall refer to all portions of the record and to all authorities relied upon in support of each proposal.

(b) *Decision based on oral argument in lieu of briefs.* In any case in which the administrative law judge believes that written briefs or proposed findings of fact and conclusions of law may not be necessary, the administrative law judge shall notify the parties at the opening of the hearing or as soon thereafter as is practicable that he or she may wish to hear oral argument in lieu of briefs. The administrative law judge shall issue his or her decision at the close of oral argument, or within 30 days thereafter.

(c) *Decision of the administrative law judge.* Within 30 days, or as soon as possible thereafter, after the time allowed for the filing of the proposed findings of fact, conclusions of law, and order, or within thirty (30) days after receipt of an agreement containing consent

findings and order disposing of the disputed matter in whole, the administrative law judge shall make his or her decision. The decision of the administrative law judge shall include findings of fact and conclusions of law, with reasons therefore, upon each material issue of fact or law presented on the record. The decision of the administrative law judge shall be based upon the whole record. It shall be supported by reliable and probative evidence. Such decision shall be in accordance with the regulations found at 29 CFR 2510.3–40 and shall be limited to whether the petitioner, based on the facts presented at the time of the proceeding, is a plan established or maintained under or pursuant to collective bargaining for the purposes of section 3(40) of ERISA.

§ 2570.159 Review by the Secretary.

(a) A request for review by the Secretary of an appealable decision of the administrative law judge may be made by any party. Such a request must be filed within 20 days of the issuance of the final decision or the final decision of the administrative law judge will become the final agency order for purposes of 5 U.S.C. 701 *et seq.*

(b) A request for review by the Secretary shall state with specificity the issue(s) in the administrative law judge's final decision upon which review is sought. The request shall be served on all parties to the proceeding.

(c) The review by the Secretary shall not be a de novo proceeding but rather a review of the record established by the administrative law judge.

(d) The Secretary may, in his or her discretion, allow the submission of supplemental briefs by the parties to the proceeding.

(e) The Secretary shall issue a decision as promptly as possible, affirming, modifying, or setting aside, in whole or in part, the decision under review, and shall set forth a brief statement of reasons therefor. Such decision by the Secretary shall be the final agency action within the meaning of 5 U.S.C. 704.

Subpart I—Procedures for the Assessment of Civil Penalties Under ERISA Section 502(c)(8)

SOURCE: 75 FR 8801, Feb. 26, 2010, unless otherwise noted.

§ 2570.160 Scope of rules.

The rules of practice set forth in this subpart are applicable to ''502(c)(8) civil penalty proceedings'' (as defined in § 2570.161(n) of this subpart) under section 502(c)(8) of the Employee Retirement Income Security Act of 1974, as amended (the Act). The rules of procedure for administrative hearings published by the Department's Office of Administrative Law Judges at Part 18 of this title will apply to matters arising under ERISA section 502(c)(8) except as modified by this subpart. These proceedings shall be conducted as expeditiously as possible, and the parties shall make every effort to avoid delay at each stage of the proceedings.

§ 2570.161 Definitions.

For 502(c)(8) civil penalty proceedings, this section shall apply in lieu of the definitions in § 18.2 of this title:

(a) *Adjudicatory proceeding* means a judicial-type proceeding before an administrative law judge leading to the formulation of a final order;

(b) *Administrative law judge* means an administrative law judge appointed pursuant to the provisions of 5 U.S.C. 3105;

(c) *Answer* means a written statement that is supported by reference to specific circumstances or facts surrounding the notice of determination issued pursuant to § 2560.502c–8(g) of this chapter;

(d) *Commencement of proceeding* is the filing of an answer by the respondent;

(e) *Consent agreement* means any written document containing a specified proposed remedy or other relief acceptable to the Department and consenting parties;

(f) *ERISA* means the Employee Retirement Income Security Act of 1974, as amended;

(g) *Final order* means the final decision or action of the Department of

Labor concerning the assessment of a civil penalty under ERISA section 502(c)(8) against a particular party. Such final order may result from a decision of an administrative law judge or the Secretary, the failure of a party to file a statement of reasonable cause described in § 2560.502c–8(e) of this chapter within the prescribed time limits, or the failure of a party to invoke the procedures for hearings or appeals under this title within the prescribed time limits. Such a final order shall constitute final agency action within the meaning of 5 U.S.C. 704;

(h) *Hearing* means that part of a proceeding which involves the submission of evidence, by either oral presentation or written submission, to the administrative law judge;

(i) *Order* means the whole or any part of a final procedural or substantive disposition of a matter under ERISA section 502(c)(8);

(j) *Party* includes a person or agency named or admitted as a party to a proceeding;

(k) *Person* includes an individual, partnership, corporation, employee benefit plan, association, exchange or other entity or organization;

(l) *Petition* means a written request, made by a person or party, for some affirmative action;

(m) *Pleading* means the notice as defined in § 2560.502c–8(g) of this chapter, the answer to the notice, any supplement or amendment thereto, and any reply that may be permitted to any answer, supplement or amendment;

(n) *502(c)(8) civil penalty proceeding* means an adjudicatory proceeding relating to the assessment of a civil penalty provided for in section 502(c)(8) of ERISA;

(o) *Respondent* means the party against whom the Department is seeking to assess a civil sanction under ERISA section 502(c)(8);

(p) *Secretary* means the Secretary of Labor and includes, pursuant to any delegation of authority by the Secretary, any assistant secretary (including the Assistant Secretary for Employee Benefits Security), administrator, commissioner, appellate body, board, or other official; and

(q) *Solicitor* means the Solicitor of Labor or his or her delegate.

§ 2570.162 Service: Copies of documents and pleadings.

For 502(c)(8) penalty proceedings, this section shall apply in lieu of § 18.3 of this title.

(a) *General*. Copies of all documents shall be served on all parties of record. All documents should clearly designate the docket number, if any, and short title of all matters. All documents to be filed shall be delivered or mailed to the Chief Docket Clerk, Office of Administrative Law Judges, 800 K Street, NW., Suite 400, Washington, DC 20001–8002, or to the OALJ Regional Office to which the proceeding may have been transferred for hearing. Each document filed shall be clear and legible.

(b) *By parties*. All motions, petitions, pleadings, briefs, or other documents shall be filed with the Office of Administrative Law Judges with a copy, including any attachments, to all other parties of record. When a party is represented by an attorney, service shall be made upon the attorney. Service of any document upon any party may be made by personal delivery or by mailing a copy to the last known address. The Department shall be served by delivery to the Associate Solicitor, Plan Benefits Security Division, ERISA section 502(c)(8) Proceeding, P.O. Box 1914, Washington, DC 20013. The person serving the document shall certify to the manner and date of service.

(c) *By the Office of Administrative Law Judges*. Service of orders, decisions and all other documents shall be made by regular mail to the last known address.

(d) *Form of pleadings*. (1) Every pleading shall contain information indicating the name of the Employee Benefits Security Administration (EBSA) as the agency under which the proceeding is instituted, the title of the proceeding, the docket number (if any) assigned by the Office of Administrative Law Judges and a designation of the type of pleading or paper (e.g., notice, motion to dismiss, *etc.*). The pleading or paper shall be signed and shall contain the address and telephone number of the party or person representing the party. Although there are no formal specifications for documents, they should be typewritten when possible on standard size 8½ × 11-inch paper.

(2) Illegible documents, whether handwritten, typewritten, photocopied, or otherwise, will not be accepted. Papers may be reproduced by any duplicating process provided all copies are clear and legible.

§ 2570.163 Parties, how designated.

For 502(c)(8) civil penalty proceedings, this section shall apply in lieu of § 18.10 of this title.

(a) The term ''party'' wherever used in this subpart shall include any natural person, corporation, employee benefit plan, association, firm, partnership, trustee, receiver, agency, public or private organization, or government agency. A party against whom a civil penalty is sought shall be designated as ''respondent.'' The Department shall be designated as the ''complainant.''

(b) Other persons or organizations shall be permitted to participate as parties only if the administrative law judge finds that the final decision could directly and adversely affect them or the class they represent, that they may contribute materially to the disposition of the proceedings and their interest is not adequately represented by existing parties, and that in the discretion of the administrative law judge the participation of such persons or organizations would be appropriate.

(c) A person or organization not named as a respondent wishing to participate as a party under this section shall submit a petition to the administrative law judge within fifteen (15) days after the person or organization has knowledge of or should have known about the proceeding. The petition shall be filed with the administrative law judge and served on each person who or organization that has been made a party at the time of filing. Such petition shall concisely state:

(1) Petitioner's interest in the proceeding;

(2) How his or her participation as a party will contribute materially to the disposition of the proceeding;

(3) Who will appear for petitioner;

(4) The issues on which petitioner wishes to participate; and

(5) Whether petitioner intends to present witnesses.

(d) Objections to the petition may be filed by a party within fifteen (15) days of the filing of the petition. If objections to the petition are filed, the administrative law judge shall then determine whether petitioner has the requisite interest to be a party in the proceedings, as defined in paragraph (b) of this section, and shall permit or deny participation accordingly. Where petitions to participate as parties are made by individuals or groups with common interests, the administrative law judge may request all such petitioners to designate a single representative, or he or she may recognize one or more of such petitioners. The administrative law judge shall give each such petitioner, as well as the parties, written notice of the decision on his or her petition. For each petition granted, the administrative law judge shall provide a brief statement of the basis of the decision. If the petition is denied, he or she shall briefly state the grounds for denial and shall then treat the petition as a request for participation as *amicus curiae*.

§ 2570.164 Consequences of default.

For 502(c)(8) civil penalty proceedings, this section shall apply in lieu of § 18.5(a) and (b) of this title. Failure of the respondent to file an answer to the notice of determination described in § 2560.502c–8(g) of this chapter within the 30 day period provided by § 2560.502c–8(h) of this chapter shall be deemed to constitute a waiver of his or her right to appear and contest the allegations of the notice of determination, and such failure shall be deemed to be an admission of the facts as alleged in the notice for purposes of any proceeding involving the assessment of a civil penalty under section 502(c)(8) of the Act. Such notice shall then become the final order of the Secretary, within the meaning of § 2570.161(g) of this subpart, forty-five (45) days from the date of service of the notice.

§ 2570.165 Consent order or settlement.

For 502(c)(8) civil penalty proceedings, the following shall apply in lieu of § 18.9 of this title.

(a) *General.* At any time after the commencement of a proceeding, but at least five (5) days prior to the date set for hearing, the parties jointly may

move to defer the hearing for a reasonable time to permit negotiation of a settlement or an agreement containing findings and an order disposing of the whole or any part of the proceeding. The allowance of such a deferral and the duration thereof shall be in the discretion of the administrative law judge, after consideration of such factors as the nature of the proceeding, the requirements of the public interest, the representations of the parties, and the probability of reaching an agreement which will result in a just disposition of the issues involved.

(b) *Content*. Any agreement containing consent findings and an order disposing of a proceeding or any part thereof shall also provide:

(1) That the order shall have the same force and effect as an order made after full hearing;

(2) That the entire record on which any order may be based shall consist solely of the notice and the agreement;

(3) A waiver of any further procedural steps before the administrative law judge;

(4) A waiver of any right to challenge or contest the validity of the order and decision entered into in accordance with the agreement; and

(5) That the order and decision of the administrative law judge shall be final agency action.

(c) *Submission*. On or before the expiration of the time granted for negotiations, but, in any case, at least five (5) days prior to the date set for hearing, the parties or their authorized representative or their counsel may:

(1) Submit the proposed agreement containing consent findings and an order to the administrative law judge; or

(2) Notify the administrative law judge that the parties have reached a full settlement and have agreed to dismissal of the action subject to compliance with the terms of the settlement; or

(3) Inform the administrative law judge that agreement cannot be reached.

(d) *Disposition*. In the event a settlement agreement containing consent findings and an order is submitted within the time allowed therefor, the administrative law judge shall issue a decision incorporating such findings and agreement within 30 days of his receipt of such document. The decision of the administrative law judge shall incorporate all of the findings, terms, and conditions of the settlement agreement and consent order of the parties. Such decision shall become final agency action within the meaning of 5 U.S.C. 704.

(e) *Settlement without consent of all parties*. In cases in which some, but not all, of the parties to a proceeding submit a consent agreement to the administrative law judge, the following procedure shall apply:

(1) If all of the parties have not consented to the proposed settlement submitted to the administrative law judge, then such non-consenting parties must receive notice, and a copy, of the proposed settlement at the time it is submitted to the administrative law judge;

(2) Any non-consenting party shall have fifteen (15) days to file any objections to the proposed settlement with the administrative law judge and all other parties;

(3) If any party submits an objection to the proposed settlement, the administrative law judge shall decide within 30 days after receipt of such objections whether he shall sign or reject the proposed settlement. Where the record lacks substantial evidence upon which to base a decision or there is a genuine issue of material fact, then the administrative law judge may establish procedures for the purpose of receiving additional evidence upon which a decision on the contested issues may reasonably be based;

(4) If there are no objections to the proposed settlement, or if the administrative law judge decides to sign the proposed settlement after reviewing any such objections, the administrative law judge shall incorporate the consent agreement into a decision meeting the requirements of paragraph (d) of this section.

§ 2570.166 Scope of discovery.

For 502(c)(8) civil penalty proceedings, this section shall apply in lieu of § 18.14 of this title.

(a) A party may file a motion to conduct discovery with the administrative law judge. The motion for discovery

shall be granted by the administrative law judge only upon a showing of good cause. In order to establish ''good cause'' for the purposes of this section, a party must show that the discovery requested relates to a genuine issue as to a material fact that is relevant to the proceeding. The order of the administrative law judge shall expressly limit the scope and terms of discovery to that for which ''good cause'' has been shown, as provided in this paragraph.

(b) A party may obtain discovery of documents and tangible things otherwise discoverable under paragraph (a) of this section and prepared in anticipation of or for the hearing by or for another party's representative (including his or her attorney, consultant, surety, indemnitor, insurer, or agent) only upon showing that the party seeking discovery has substantial need of the materials or information in the preparation of his or her case and that he or she is unable without undue hardship to obtain the substantial equivalent of the materials or information by other means. In ordering discovery of such materials when the required showing has been made, the administrative law judge shall protect against disclosure of the mental impressions, conclusions, opinions, or legal theories of an attorney or other representatives of a party concerning the proceeding.

§ 2570.167 Summary decision.

For 502(c)(8) civil penalty proceedings, this section shall apply in lieu of § 18.41 of this title.

(a) *No genuine issue of material fact.* (1) Where no issue of a material fact is found to have been raised, the administrative law judge may issue a decision which, in the absence of an appeal pursuant to §§ 2570.169 through 2570.171 of this subpart, shall become a final order.

(2) A decision made under paragraph (a) of this section shall include a statement of:

(i) Findings of fact and conclusions of law, and the reasons therefor, on all issues presented; and

(ii) Any terms and conditions of the rule or order.

(3) A copy of any decision under this paragraph shall be served on each party.

(b) *Hearings on issues of fact.* Where a genuine question of a material fact is raised, the administrative law judge shall, and in any other case may, set the case for an evidentiary hearing.

§ 2570.168 Decision of the administrative law judge.

For 502(c)(8) civil penalty proceedings, this section shall apply in lieu of § 18.57 of this title.

(a) *Proposed findings of fact, conclusions, and order.* Within twenty (20) days of the filing of the transcript of the testimony, or such additional time as the administrative law judge may allow, each party may file with the administrative law judge, subject to the judge's discretion, proposed findings of fact, conclusions of law, and order together with a supporting brief expressing the reasons for such proposals. Such proposals and briefs shall be served on all parties, and shall refer to all portions of the record and to all authorities relied upon in support of each proposal.

(b) *Decision of the administrative law judge.* Within a reasonable time after the time allowed for the filing of the proposed findings of fact, conclusions of law, and order, or within thirty (30) days after receipt of an agreement containing consent findings and order disposing of the disputed matter in whole, the administrative law judge shall make his or her decision. The decision of the administrative law judge shall include findings of fact and conclusions of law with reasons therefor upon each material issue of fact or law presented on the record. The decision of the administrative law judge shall be based upon the whole record. In a contested case in which the Department and the Respondent have presented their positions to the administrative law judge pursuant to the procedures for 502(c)(8) civil penalty proceedings as set forth in this subpart, the penalty (if any) which may be included in the decision of the administrative law judge shall be limited to the penalty expressly provided for in section 502(c)(8) of ERISA. It

shall be supported by reliable and probative evidence. The decision of the administrative law judge shall become final agency action within the meaning of 5 U.S.C. 704 unless an appeal is made pursuant to the procedures set forth in §§ 2570.169 through 2570.171 of this subpart.

§ 2570.169 Review by the Secretary.

(a) The Secretary may review a decision of an administrative law judge. Such a review may occur only when a party files a notice of appeal from a decision of an administrative law judge within twenty (20) days of the issuance of such decision. In all other cases, the decision of the administrative law judge shall become final agency action within the meaning of 5 U.S.C. 704.

(b) A notice of appeal to the Secretary shall state with specificity the issue(s) in the decision of the administrative law judge on which the party is seeking review. Such notice of appeal must be served on all parties of record.

(c) Upon receipt of a notice of appeal, the Secretary shall request the Chief Administrative Law Judge to submit to him or her a copy of the entire record before the administrative law judge.

§ 2570.170 Scope of review.

The review of the Secretary shall not be a de novo proceeding but rather a review of the record established before the administrative law judge. There shall be no opportunity for oral argument.

§ 2570.171 Procedures for review by the Secretary.

(a) Upon receipt of the notice of appeal, the Secretary shall establish a briefing schedule which shall be served on all parties of record. Upon motion of one or more of the parties, the Secretary may, in his or her discretion, permit the submission of reply briefs.

(b) The Secretary shall issue a decision as promptly as possible after receipt of the briefs of the parties. The Secretary may affirm, modify, or set aside, in whole or in part, the decision on appeal and shall issue a statement of reasons and bases for the action(s) taken. Such decision by the Secretary shall be final agency action within the meaning of 5 U.S.C. 704.

PART 2571—PROCEDURAL REGULATIONS FOR ADMINISTRATION AND ENFORCEMENT UNDER THE EMPLOYEE RETIREMENT INCOME SECURITY ACT

Subpart A—Procedures for Administrative Hearings on the Issuance of Cease and Desist Orders Under ERISA Section 521—Multiple Employer Welfare Arrangements

Sec.

2571.1 Scope of rules.
2571.2 Definitions.
2571.3 Service: copies of documents and pleadings.
2571.4 Parties.
2571.5 Consequences of default.
2571.6 Consent order or settlement.
2571.7 Scope of discovery.
2571.8 Summary decision.
2571.9 Decision of the administrative law judge.
2571.10 Review by the Secretary.
2571.11 Scope of review by the Secretary.
2571.12 Procedures for review by the Secretary.
2571.13 Effective date.

Subpart B [Reserved]

AUTHORITY: 29 U.S.C. 1002(40), 1132, 1135; and 1151, Secretary of Labor's Order 1–2011, 77 FR 1088 (January 9, 2012).

SOURCE: 78 FR 13808, Mar. 1, 2013, unless otherwise noted.

Subpart A—Procedures for Administrative Hearings on the Issuance of Cease and Desist Orders Under ERISA Section 521—Multiple Employer Welfare Arrangements

§ 2571.1 Scope of rules.

The rules of practice set forth in this part apply to ex parte cease and desist order proceedings under section 521 of the Employee Retirement Income Security Act of 1974, as amended (ERISA). The rules of procedure for administrative hearings published by the Department's Office of Administrative Law Judges at Part 18 of this Title will apply to matters arising under ERISA section 521 except as modified by this section. These proceedings shall be

conducted as expeditiously as possible, and the parties and the Office of the Administrative Law Judges shall make every effort to avoid delay at each stage of the proceedings.

§ 2571.2 Definitions.

For section 521 proceedings, this section shall apply in lieu of the definitions in § 18.2 of this title:

(a) *Adjudicatory proceeding* means a judicial-type proceeding before an administrative law judge leading to an order;

(b) *Administrative law judge* means an administrative law judge appointed pursuant to the provisions of 5 U.S.C. 3105;

(c) *Answer* means a written statement that is supported by reference to specific circumstances or facts surrounding the temporary order issued pursuant to 29 CFR 2560.521–1(c);

(d) *Commencement of proceeding* is the filing of an answer by the respondent;

(e) *Consent agreement* means a proposed written agreement and order containing a specified proposed remedy or other relief acceptable to the Secretary and consenting parties;

(f) *Final order* means a cease and desist order that is a final order of the Secretary of Labor under ERISA section 521. Such final order may result from a decision of an administrative law judge or of the Secretary on review of a decision of an administrative law judge, or from the failure of a party to invoke the procedures for a hearing under 29 CFR 2560.521–1 within the prescribed time limit. A final order shall constitute a final agency action within the meaning of 5 U.S.C. 704;

(g) *Hearing* means that part of a section 521 proceeding which involves the submission of evidence, either by oral presentation or written submission, to the administrative law judge;

(h) *Order* means the whole or any part of a final procedural or substantive disposition of a section 521 proceeding;

(i) *Party* includes a person or agency named or admitted as a party to a section 521 proceeding;

(j) *Person* includes an individual, partnership, corporation, employee welfare benefit plan, association, or other entity or organization;

(k) *Petition* means a written request, made by a person or party, for some affirmative action;

(l) *Respondent* means the party against whom the Secretary is seeking to impose a cease and desist order under ERISA section 521;

(m) *Secretary* means the Secretary of Labor or his or her delegate;

(n) *Section 521 proceeding* means an adjudicatory proceeding relating to the issuance of a temporary order under 29 CFR 2560.521–1 and section 521 of ERISA;

(o) *Solicitor* means the Solicitor of Labor or his or her delegate; and

(p) *Temporary order* means the temporary cease and desist order issued by the Secretary under 29 CFR 2560.521–1(c) and section 521 of ERISA.

§ 2571.3 Service: copies of documents and pleadings.

For section 521 proceedings, this section shall apply in lieu of § 18.3 of this title:

(a) *In general.* Copies of all documents shall be served on all parties of record. All documents should clearly designate the docket number, if any, and short title of all matters. All documents to be filed shall be delivered or mailed to the Chief Docket Clerk, Office of Administrative Law Judges, 800 K Street NW., Suite 400, Washington, DC 20001–8002, or to the OALJ Regional Office to which the section 521 proceeding may have been transferred for hearing. Each document filed shall be clear and legible.

(b) *By parties.* All motions, petitions, pleadings, briefs, or other documents shall be filed with the Office of Administrative Law Judges with a copy, including any attachments, to all other parties of record. When a party is represented by an attorney, service shall be made upon the attorney. Service of any document upon any party may be made by personal delivery or by mailing a copy to the last known address. The Secretary shall be served by delivery to the Associate Solicitor, Plan Benefits Security Division, ERISA Section 521 Proceeding, P.O. Box 1914, Washington, DC 20013 and any attorney named for service of process as set

forth in the temporary order. The person serving the document shall certify to the manner of date and service.

(c) *By the Office of Administrative Law Judges.* Service of orders, decisions, and all other documents shall be made in such manner as the Office of Administrative Law Judges determines to the last known address.

(d) *Form of pleadings.*

(1) Every pleading or other paper filed in a section 521 proceeding shall designate the Employee Benefits Security Administration (EBSA) as the agency under which the proceeding is instituted, the title of the proceeding, the docket number (if any) assigned by the Office of Administrative Law Judges and a designation of the type of pleading or paper (e.g., notice, motion to dismiss, etc.). The pleading or paper shall be signed and shall contain the address and telephone number of the party or person representing the party. Although there are no formal specifications for documents, they should be printed when possible on standard size 8½ × 11 inch paper.

(2) Illegible documents, whether handwritten, printed, photocopies, or otherwise, will not be accepted. Papers may be reproduced by any duplicating process provided all copies are clear and legible.

§ 2571.4 Parties.

For section 521 proceedings, this section shall apply in lieu of § 18.10 of this title:

(a) The term ''party'' wherever used in these rules shall include any person that is a subject of the temporary order and is challenging the temporary order under these section 521 proceedings, and the Secretary. A party challenging a temporary order shall be designated as the ''respondent.'' The Secretary shall be designated as the ''complainant.''

(b) Other persons shall be permitted to participate as parties only if the administrative law judge finds that the final decision could directly and adversely affect them or the class they represent, that they may contribute materially to the disposition of the section 521 proceeding and their interest is not adequately represented by the existing parties, and that in the discretion of the administrative law judge the participation of such persons would be appropriate.

(c) A person not named in a temporary order, but wishing to participate as a respondent under this section shall submit a petition to the administrative law judge within fifteen (15) days after the person has knowledge of, or should have known about, the section 521 proceeding. The petition shall be filed with the administrative law judge and served on each person who has been made a party at the time of filing. Such petition shall concisely state:

(1) Petitioner's interest in the section 521 proceeding (including how the section 521 proceedings will directly and adversely affect them or the class they represent and why their interest is not adequately represented by the existing parties);

(2) How his or her participation as a party will contribute materially to the disposition of the section 521 proceeding;

(3) Who will appear for the petitioner;

(4) The issues on which petitioner wishes to participate; and

(5) Whether petitioner intends to present witnesses.

(d) Objections to the petition may be filed by a party within fifteen (15) days of the filing of the petition. If objections to the petition are filed, the administrative law judge shall then determine whether petitioners have the requisite interest to be a party in the section 521 proceeding, as defined in paragraph (b) of this section, and shall permit or deny participation accordingly. Where persons with common interest file petitions to participate as parties in a section 521 proceeding, the administrative law judge may request all such petitioners to designate a single representative, or the administrative law judge may designate one or more of the petitioners to represent the others. The administrative law judge shall give each such petitioner, as well as the parties, written notice of the decision on his or her petition. For each petition granted, the administrative law judge shall provide a brief statement of the basis of the decision. If the petition is denied, he or she shall briefly state the grounds for denial and

may consider whether to treat the petition as a request for participation as amicus curiae.

§ 2571.5 Consequences of default.

For section 521 proceedings, this section shall apply in lieu of § 18.5(b) of this title. Failure of the respondent to file an answer to the temporary order within the 30-day period provided by 29 CFR 2560.521–1(e) shall constitute a waiver of the respondent's right to appear and contest the temporary order. Such failure shall also be deemed to be an admission of the facts as alleged in the temporary order for purposes of any proceeding involving the order issued under section 521 of ERISA. The temporary order shall then become the final order of the Secretary, within the meaning of 29 CFR 2571.2(f), 30 days from the date of the service of the temporary order.

§ 2571.6 Consent order or settlement.

For section 521 proceedings, this section shall apply in lieu of § 18.9 of this title:

(a) *In general.* At any time after the commencement of a section 521 proceeding, the parties jointly may move to defer the hearing for a reasonable time in order to negotiate a settlement or an agreement containing findings and a consent order disposing of the whole or any part of the section 521 proceeding. The administrative law judge shall have discretion to allow or deny such a postponement and to determine its duration. In exercising this discretion, the administrative law judge shall consider the nature of the section 521 proceeding, the requirements of the public interest, the representations of the parties and the probability of reaching an agreement that will result in a just disposition of the issues involved.

(b) *Content.* Any agreement containing consent findings and an order disposing of the section 521 proceeding or any part thereof shall also provide:

(1) That the consent order shall have the same force and effect as an order made after full hearing;

(2) That the entire record on which the consent order is based shall consist solely of the notice and the agreement;

(3) A waiver of any further procedural steps before the administrative law judge;

(4) A waiver of any right to challenge or contest the validity of the consent order and decision entered into in accordance with the agreement; and

(5) That the consent order and decision of the administrative law judge shall be final agency action within the meaning of 5 U.S.C. 704.

(c) *Submission.* On or before the expiration of the time granted for negotiations, the parties or their authorized representatives or their counsel may:

(1) Submit the proposed agreement containing consent findings and an order to the administrative law judge;

(2) Notify the administrative law judge that the parties have reached a full settlement and have agreed to dismissal of the action subject to compliance with the terms of the settlement; or

(3) Inform the administrative law judge that agreement cannot be reached.

(d) *Disposition.* If a settlement agreement containing consent findings and an order, agreed to by all the parties to a section 521 proceeding, is submitted within the time allowed therefor, the administrative law judge shall incorporate all of the findings, terms, and conditions of the settlement agreement and consent order of the parties. Such decision shall become a final agency action within the meaning of 5 U.S.C. 704.

(e) *Settlement without consent of all respondents.* In cases in which some, but not all, of the respondents to a section 521 proceeding submit an agreement and consent order to the administrative law judge, the following procedure shall apply:

(1) If all of the respondents have not consented to the proposed settlement submitted to the administrative law judge, then such non-consenting parties must receive notice and a copy of the proposed settlement at the time it is submitted to the administrative law judge;

(2) Any non-consenting respondent shall have fifteen (15) days to file any objections to the proposed settlement with the administrative law judge and all other parties;

(3) If any respondent submits an objection to the proposed settlement, the administrative law judge shall decide within thirty (30) days after receipt of such objections whether to sign or reject the proposed settlement. Where the record lacks substantial evidence upon which to base a decision or there is a genuine issue of material fact, then the administrative law judge may establish procedures for the purpose of receiving additional evidence upon which a decision on the contested issue may be reasonably based;

(4) If there are no objections to the proposed settlement, or if the administrative law judge decides to sign the proposed settlement after reviewing any such objections, the administrative law judge shall incorporate the consent agreement into a decision meeting the requirements of paragraph (d) of this section; and

(5) If the consent agreement is incorporated into a decision meeting the requirements of paragraph (d) of this section, the administrative law judge shall continue the section 521 proceeding with respect to any non-consenting respondents.

§ 2571.7 Scope of discovery.

For section 521 proceedings, this section shall apply in lieu of § 18.14 of this title:

(a) A party may file a motion to conduct discovery with the administrative law judge. The administrative law judge may grant a motion for discovery only upon a showing of good cause. In order to establish ''good cause'' for the purposes of this section, the moving party must show that the requested discovery relates to a genuine issue as to a fact that is material to the section 521 proceeding. The order of the administrative law judge shall expressly limit the scope and terms of the discovery to that for which ''good cause'' has been shown, as provided in this paragraph.

(b) Any evidentiary privileges apply as they would apply in a civil proceeding in federal district court. For example, legal advice provided by an attorney to a client is generally protected from disclosure. Mental impressions, conclusions, opinions, or legal theories of a party's attorney or other representative developed in anticipation of litigation are also generally protected from disclosure. The administrative law judge may not, however, protect from discovery or use, relevant communications between an attorney and a plan administrator or other plan fiduciary, or work product, that fall under the fiduciary exception to the attorney-client or work product privileges. The fiduciary exception to these privileges exists when an attorney advises the plan administrator or other plan fiduciary on matters concerning plan administration or other fiduciary activities. Consequently, the administrative law judge may not protect such communications from discovery or from use by the Secretary in the proceedings. The administrative law judge also may also not protect attorney work product prepared to assist the fiduciary in its fiduciary capacity from discovery or from use by the Secretary in the proceedings. The fiduciary exception does not apply, however, to the extent that communications were made or documents were prepared exclusively to aid the fiduciary personally or for non-fiduciary matters (*e.g.* settlor acts), provided that the plan did not pay for the legal services. The Secretary need not make a special showing, such as good cause, merely to obtain information or documents covered by the fiduciary exception. Other relevant exceptions to the attorney-client or work product privileges shall also apply.

§ 2571.8 Summary decision.

For section 521 proceedings, this section shall apply in lieu of § 18.41 of this title:

(a) *No genuine issue of material fact.* Where the administrative law judge finds that no issue of a material fact has been raised, he or she may issue a decision which, in the absence of an appeal, pursuant to §§ 2571.10 through 2571.12, shall become a final agency action within the meaning of 5 U.S.C. 704.

(b) A decision made under this section, shall include a statement of:

(1) Findings of fact and conclusions of law, and the reasons thereof, on all issues presented; and

(2) Any terms and conditions of the ruling.

(c) A copy of any decision under this section shall be served on each party.

§ 2571.9 Decision of the administrative law judge.

For section 521 proceedings, this section shall apply in lieu of § 18.57 of this title:

(a) *Proposed findings of fact, conclusions, and order.* Within twenty (20) days of the filing of the transcript of the testimony, or such additional time as the administrative law judge may allow, each party may file with the administrative law judge, subject to the judge's discretion, proposed findings of fact, conclusions of law, and order together with a supporting brief expressing the reasons for such proposals. Such proposals and briefs shall be served on all parties, and shall refer to all portions of the record and to all authorities relied upon in support of each proposal.

(b) *Decision of the administrative law judge.* The administrative law judge shall make his or her decision expeditiously after the conclusion of the section 521 proceeding. The decision of the administrative law judge shall include findings of fact and conclusions of law with reasons therefore upon each material issue of fact or law presented on the record. The decision of the administrative law judge shall be based upon the whole record and shall be supported by reliable and probative evidence. The decision of the administrative law judge shall become final agency action within the meaning of 5 U.S.C. 704 unless an appeal is made pursuant to the procedures set forth in §§ 2571.10 through 2571.12.

§ 2571.10 Review by the Secretary.

(a) The Secretary may review the decision of an administrative law judge. Such review may occur only when a party files a notice of appeal from a decision of an administrative law judge within twenty (20) days of the issuance of such a decision. In all other cases, the decision of the administrative law judge shall become the final agency action within the meaning of 5 U.S.C. 704.

(b) A notice of appeal to the Secretary shall state with specificity the issue(s) in the decision of the administrative law judge on which the party is seeking review. Such notice of appeal must be served on all parties of record.

(c) Upon receipt of an appeal, the Secretary shall request the Chief Administrative Law Judge to submit to the Secretary a copy of the entire record before the administrative law judge.

§ 2571.11 Scope of review by the Secretary.

The review of the Secretary shall be based on the record established before the administrative law judge. There shall be no opportunity for oral argument.

§ 2571.12 Procedures for review by the Secretary.

(a) Upon receipt of a notice of appeal, the Secretary shall establish a briefing schedule which shall be served on all parties of record. Upon motion of one or more of the parties, the Secretary may, in her discretion, permit the submission of reply briefs.

(b) The Secretary shall issue a decision as promptly as possible after receipt of the briefs of the parties. The Secretary may affirm, modify, or set aside, in whole or in part, the decision on appeal and shall issue a statement of reasons and bases for the action(s) taken. Such decision by the Secretary shall be the final agency action with the meaning of 5 U.S.C. 704.

§ 2571.13 Effective date.

This regulation is effective with respect to all cease and desist orders issued by the Secretary under section 521 of ERISA at any time after April 1, 2013.

Subpart B [Reserved]

PART 2575—ADJUSTMENT OF CIVIL PENALTIES UNDER ERISA TITLE I

Subpart A—Adjustment of Civil Penalties Under ERISA Title I

Sec.

2575.100 In general.
2575.209b–1 Adjusted civil penalty under section 209(b).
2575.502c–1 Adjusted civil penalty under section 502(c)(1).
2575.502c–2 Adjusted civil penalty under section 502(c)(2).

2575.502c–3 Adjusted civil penalty under section 502(c)(3).
2575.502c–5 Adjusted civil penalty under section 502(c)(5).
2575.502c–6 Adjusted civil penalty under section 502(c)(6).

Subparts B–D [Reserved]

AUTHORITY: 29 U.S.C. 1135; 28 U.S.C. 2461 note; Secretary of Labor's Order 1–2003, 68 FR 5374 (Feb. 3, 2003).

SOURCE: 64 FR 42246, Aug. 3, 1999, unless otherwise noted.

Subpart A—Adjustment of Civil Penalties Under ERISA Title I

SOURCE: 62 FR 40699, July 29, 1997, unless otherwise noted. Redesignated at 64 FR 42246, Aug. 3, 1999.

§ 2575.100 In general.

Section 31001(s) of the Debt Collection Improvement Act of 1996 (the Act, Public Law 104–134, 110 Stat. 1321–373) amended the Federal Civil Penalties Inflation Adjustment Act of 1990 (the 1990 Act, Public Law 101–410, 104 Stat. 890) to require generally that the head of each Federal agency adjust the civil monetary penalties subject to its jurisdiction for inflation within 180 days after enactment of the Act and at least once every four years thereafter.

[68 FR 2878, Jan. 22, 2003]

§ 2575.209b–1 Adjusted civil penalty under section 209(b).

In accordance with the requirements of the 1990 Act, as amended, the amount of the civil monetary penalty established by section 209(b) of the Employee Retirement Income Security Act of 1974, as amended (ERISA), is hereby increased from $10 for each employee to $11 for each employee. This adjusted penalty applies only to violations occurring after July 29, 1997.

§ 2575.502c–1 Adjusted civil penalty under section 502(c)(1).

In accordance with the requirements of the 1990 Act, as amended, the maximum amount of the civil monetary penalty established by section 502(c)(1) of the Employee Retirement Income Security Act of 1974, as amended (ERISA), is hereby increased from $100 a day to $110 a day. This adjusted penalty applies only to violations occurring after July 29, 1997.

§ 2575.502c–2 Adjusted civil penalty under section 502(c)(2).

In accordance with the requirements of the 1990 Act, as amended, the maximum amount of the civil monetary penalty established by section 502(c)(2) of the Employee Retirement Income Security Act of 1974, as amended (ERISA), is hereby increased from $1000 a day to $1100 a day. This adjusted penalty applies only to violations occurring after July 29, 1997.

§ 2575.502c–3 Adjusted civil penalty under section 502(c)(3).

In accordance with the requirements of the 1990 Act, as amended, the maximum amount of the civil monetary penalty established by section 502(c)(3) of the Employee Retirement Income Security Act of 1974, as amended (ERISA), is hereby increased from $100 a day to $110 a day. This adjusted penalty applies only to violations occurring after July 29, 1997.

§ 2575.502c–5 Adjusted civil penalty under section 502(c)(5).

In accordance with the requirements of the 1990 Act, as amended, the maximum amount of the civil monetary penalty established by section 502(c)(5) of the Employee Retirement Income Security Act of 1974, as amended (ERISA), is hereby increased from $1,000 a day to $1,100 a day. This adjusted penalty applies only to violations occurring after March 24, 2003.

[68 FR 2879, Jan. 22, 2003]

§ 2575.502c–6 Adjusted civil penalty under section 502(c)(6).

In accordance with the requirements of the 1990 Act, as amended, the maximum amount of the civil monetary penalty established by section 502(c)(6) of the Employee Retirement Income Security Act of 1974, as amended (ERISA), is hereby increased from $100 a day but in no event in excess of $1,000 per request to $110 a day but in no event in excess of $1,100 per request. This adjusted penalty applies only to

violations occurring after March 24, 2003.

[68 FR 2879, Jan. 22, 2003]

Subparts B–D [Reserved]

PART 2578—RULES AND REGULATIONS FOR ABANDONED PLANS

Sec.
2578.1 Termination of abandoned individual account plans.

AUTHORITY: 29 U.S.C. 1135; 1104(a); 1103(d)(1).

§ 2578.1 Termination of abandoned individual account plans.

(a) *General.* The purpose of this part is to establish standards for the termination and winding up of an individual account plan (as defined in section 3(34) of the Employee Retirement Income Security Act of 1974 (ERISA or the Act)) with respect to which a qualified termination administrator (as defined in paragraph (g) of this section) has determined there is no responsible plan sponsor or plan administrator within the meaning of section 3(16)(B) and (A) of the Act, respectively, to perform such acts.

(b) *Finding of abandonment.* (1) A qualified termination administrator may find an individual account plan to be abandoned when:

(i) Either: (A) No contributions to, or distributions from, the plan have been made for a period of at least 12 consecutive months immediately preceding the date on which the determination is being made; or

(B) Other facts and circumstances (such as a filing by or against the plan sponsor for liquidation under title 11 of the United States Code, or communications from participants and beneficiaries regarding distributions) known to the qualified termination administrator suggest that the plan is or may become abandoned by the plan sponsor; and

(ii) Following reasonable efforts to locate or communicate with the plan sponsor, the qualified termination administrator determines that the plan sponsor:

(A) No longer exists;

(B) Cannot be located; or

(C) Is unable to maintain the plan.

(2) Notwithstanding paragraph (b)(1) of this section, a qualified termination administrator may not find a plan to be abandoned if, at any time before the plan is deemed terminated pursuant to paragraph (c) of this section, the qualified termination administrator receives an objection from the plan sponsor regarding the finding of abandonment and proposed termination.

(3) A qualified termination administrator shall, for purposes of paragraph (b)(1)(ii) of this section, be deemed to have made a reasonable effort to locate or communicate with the plan sponsor if the qualified termination administrator sends to the last known address of the plan sponsor, and, in the case of a plan sponsor that is a corporation, to the address of the person designated as the corporation's agent for service of legal process, by a method of delivery requiring acknowledgement of receipt, the notice described in paragraph (b)(5) of this section.

(4) If receipt of the notice described in paragraph (b)(5) of this section is not acknowledged pursuant to paragraph (b)(3) of this section, the qualified termination administrator shall be deemed to have made a reasonable effort to locate or communicate with the plan sponsor if the qualified termination administrator contacts known service providers (other than itself) of the plan and requests the current address of the plan sponsor from such service providers and, if such information is provided, the qualified termination administrator sends to each such address, by a method of delivery requiring acknowledgement of receipt, the notice described in paragraph (b)(5) of this section.

(5) The notice referred to in paragraph (b)(3) of this section shall contain the following information:

(i) The name and address of the qualified termination administrator;

(ii) The name of the plan;

(iii) The account number or other identifying information relating to the plan;

(iv) A statement that the plan may be terminated and benefits distributed pursuant to 29 CFR 2578.1 if the plan sponsor fails to contact the qualified

termination administrator within 30 days;

(v) The name, address, and telephone number of the person, office, or department that the plan sponsor must contact regarding the plan;

(vi) A statement that if the plan is terminated pursuant to 29 CFR 2578.1, notice of such termination will be furnished to the U.S. Department of Labor's Employee Benefits Security Administration;

(vii) The following statement: ''The U.S. Department of Labor requires that you be informed that, as a fiduciary or plan administrator or both, you may be personally liable for costs, civil penalties, excise taxes, etc. as a result of your acts or omissions with respect to this plan. The termination of this plan will not relieve you of your liability for any such costs, penalties, taxes, etc.''; and

(viii) A statement that the plan sponsor may contact the U.S Department of Labor for more information about the federal law governing the termination and winding-up process for abandoned plans and the telephone number of the appropriate Employee Benefit Security Administration contact person.

(c) *Deemed termination.* (1) Except as provided in paragraph (c)(2) of this section, if a qualified termination administrator finds, pursuant to paragraph (b)(1) of this section, that an individual account plan has been abandoned, the plan shall be deemed to be terminated on the ninetieth (90th) day following the date of the letter from EBSA's Office of Enforcement acknowledging receipt of the notice of plan abandonment, described in paragraph (c)(3) of this section.

(2) If, prior to the end of the 90-day period described in paragraph (c)(1) of this section, the Department notifies the qualified termination administrator that it—

(i) Objects to the termination of the plan, the plan shall not be deemed terminated under paragraph (c)(1) of this section until the qualified termination administrator is notified that the Department has withdrawn its objection; or

(ii) Waives the 90-day period described in paragraph (c)(1), the plan shall be deemed terminated upon the qualified termination administrator's receipt of such notification.

(3) Following a qualified termination administrator's finding, pursuant to paragraph (b)(1) of this section, that an individual account plan has been abandoned, the qualified termination administrator shall furnish to the U.S. Department of Labor a notice of plan abandonment that is signed and dated by the qualified termination administrator and that includes the following information:

(i) *Qualified termination administrator information.* (A) The name, EIN, address, and telephone number of the person electing to be the qualified termination administrator, including the address, e-mail address, and telephone number of the person signing the notice (or other contact person, if different from the person signing the notice);

(B) A statement that the person (identified in paragraph (c)(3)(i)(A) of this section) is a qualified termination administrator within the meaning of paragraph (g) of this section and elects to terminate and wind up the plan (identified in paragraph (c)(3)(ii)(A) of this section) in accordance with the provisions of this section; and

(C) An identification whether the person electing to be the qualified termination administrator or its affiliate is, or within the past 24 months has been, the subject of an investigation, examination, or enforcement action by the Department, Internal Revenue Service, or Securities and Exchange Commission concerning such entity's conduct as a fiduciary or party in interest with respect to any plan covered by the Act.

(ii) *Plan information.* (A) The name, address, telephone number, account number, EIN, and plan number of the plan with respect to which the person is electing to serve as the qualified termination administrator;

(B) The name and last known address and telephone number of the plan sponsor; and

(C) The estimated number of participants in the plan;

(iii) *Findings.* A statement that the person electing to be the qualified termination administrator finds that the plan (identified in paragraph

(c)(3)(ii)(A) of this section) is abandoned pursuant to paragraph (b) of this section. This statement shall include an explanation of the basis for such a finding, specifically referring to the provisions in paragraph (b)(1) of this section, a description of the specific steps (set forth in paragraphs (b)(3) and (b)(4) of this section) taken to locate or communicate with the known plan sponsor, and a statement that no objection has been received from the plan sponsor;

(iv) *Plan asset information.* (A) The estimated value of the plan's assets held by the person electing to be the qualified termination administrator;

(B) The length of time plan assets have been held by the person electing to be the qualified termination administrator, if such period of time is less than 12 months;

(C) An identification of any assets with respect to which there is no readily ascertainable fair market value, as well as information, if any, concerning the value of such assets; and

(D) An identification of known delinquent contributions pursuant to paragraph (d)(2)(iii) of this section;

(v) *Service provider information.* (A) The name, address, and telephone number of known service providers (e.g., record keeper, accountant, lawyer, other asset custodian(s)) to the plan; and

(B) An identification of any services considered necessary to wind up the plan in accordance with this section, the name of the service provider(s) that is expected to provide such services, and an itemized estimate of expenses attendant thereto expected to be paid out of plan assets by the qualified termination administrator; and

(vi) *Perjury statement.* A statement that the information being provided in the notice is true and complete based on the knowledge of the person electing to be the qualified termination administrator, and that the information is being provided by the qualified termination administrator under penalty of perjury.

(d) *Winding up the affairs of the plan.* (1) In any case where an individual account plan is deemed to be terminated pursuant to paragraph (c) of this section, the qualified termination administrator shall take steps as may be necessary or appropriate to wind up the affairs of the plan and distribute benefits to the plan's participants and beneficiaries.

(2) For purposes of paragraph (d)(1) of this section, the qualified termination administrator shall:

(i) *Update plan records.* (A) Undertake reasonable and diligent efforts to locate and update plan records necessary to determine the benefits payable under the terms of the plan to each participant and beneficiary.

(B) For purposes of paragraph (d)(2)(i)(A) of this section, a qualified termination administrator shall not have failed to make reasonable and diligent efforts to update plan records merely because the administrator determines in good faith that updating the records is either impossible or involves significant cost to the plan in relation to the total assets of the plan.

(ii) *Calculate benefits.* Use reasonable care in calculating the benefits payable to each participant or beneficiary based on plan records described in paragraph (d)(2)(i) of this section. A qualified termination administrator shall not have failed to use reasonable care in calculating benefits payable solely because the qualified termination administrator—

(A) Treats as forfeited an account balance that, taking into account estimated forfeitures and other assets allocable to the account, is less than the estimated share of plan expenses allocable to that account, and reallocates that account balance to defray plan expenses or to other plan accounts in accordance with (d)(2)(ii)(B) of this section;

(B) Allocates expenses and unallocated assets in accordance with the plan documents, or, if the plan document is not available, is ambiguous, or if compliance with the plan is unfeasible,

(*1*) Allocates unallocated assets (including forfeitures and assets in a suspense account) to participant accounts on a per capita basis (allocated equally to all accounts); and

(*2*) Allocates expenses on a pro rata basis (proportionately in the ratio that each individual account balance bears to the total of all individual account

balances) or on a per capita basis (allocated equally to all accounts).

(iii) *Report delinquent contributions.* (A) Notify the Department of any known contributions (either employer or employee) owed to the plan in conjunction with the filing of either the notification required in paragraph (c)(3) or (d)(2)(ix) of this section.

(B) Nothing in paragraph (d)(2)(iii)(A) of this section or any other provision of the Act shall be construed to impose an obligation on the qualified termination administrator to collect delinquent contributions on behalf of the plan, provided that the qualified termination administrator satisfies the requirements of paragraph (d)(2)(iii)(A) of this section.

(iv) *Engage service providers.* Engage, on behalf of the plan, such service providers as are necessary for the qualified termination administrator to wind up the affairs of the plan and distribute benefits to the plan's participants and beneficiaries in accordance with paragraph (d)(1) of this section.

(v) *Pay reasonable expenses.* (A) Pay, from plan assets, the reasonable expenses of carrying out the qualified termination administrator's authority and responsibility under this section.

(B) Expenses of plan administration shall be considered reasonable solely for purposes of paragraph (d)(2)(v)(A) of this section if:

(*1*) Such expenses are for services necessary to wind up the affairs of the plan and distribute benefits to the plan's participants and beneficiaries,

(*2*) Such expenses: (i) Are consistent with industry rates for such or similar services, based on the experience of the qualified termination administrator; and

(ii) Are not in excess of rates ordinarily charged by the qualified termination administrator (or affiliate) for same or similar services provided to customers that are not plans terminated pursuant to this section, if the qualified termination administrator (or affiliate) provides same or similar services to such other customers, and

(*3*) The payment of such expenses would not constitute a prohibited transaction under the Act or is exempted from such prohibited transaction provisions pursuant to section 408(a) of the Act.

(vi) *Notify participants.* (A) Furnish to each participant or beneficiary of the plan a notice written in a manner calculated to be understood by the average plan participant and containing the following:

(*1*) The name of the plan;

(*2*) A statement that the plan has been determined to be abandoned by the plan sponsor and, therefore, has been terminated pursuant to regulations issued by the U.S. Department of Labor;

(*3*)(*i*) A statement of the account balance and the date on which it was calculated by the qualified termination administrator, and

(*ii*) The following statement: ''The actual amount of your distribution may be more or less than the amount stated in this letter depending on investment gains or losses and the administrative cost of terminating your plan and distributing your benefits.'';

(*4*) A description of the distribution options available under the plan and a request that the participant or beneficiary elect a form of distribution and inform the qualified termination administrator (or designee) of that election;

(*5*) A statement explaining that, if a participant or beneficiary fails to make an election within 30 days from receipt of the notice, the qualified termination administrator (or designee) will distribute the account balance of the participant or beneficiary directly:

(*i*) To an individual retirement plan (*i.e.*, individual retirement account or annuity),

(ii) To an inherited individual retirement plan described in § 2550.404a–3(d)(1)(ii) of this chapter (in the case of a distribution on behalf of a distributee other than a participant or spouse),

(iii) In any case where the amount to be distributed meets the conditions in § 2550.404a–3 (d)(1)(iii), to an interest-bearing federally insured bank account, the unclaimed property fund of the State of the last known address of the participant or beneficiary, or an individual retirement plan (described in § 2550.404a–3(d)(1)(i) or (d)(1)(ii) of this chapter) or

(*iv*) To an annuity provider in any case where the qualified termination administrator determines that the survivor annuity requirements in sections 401(a)(11) and 417 of the Internal Revenue Code (or section 205 of ERISA) prevent a distribution under paragraph (d)(2)(vii)(B)(*1*) of this section;

(*6*) In the case of a distribution to an individual retirement plan (described in § 2550.404a–3(d)(1)(i) or (d)(1)(ii) of this chapter) a statement explaining that the account balance will be invested in an investment product designed to preserve principal and provide a reasonable rate of return and liquidity;

(*7*) A statement of the fees, if any, that will be paid from the participant or beneficiary's individual retirement plan (described in § 2550.404a–3(d)(1)(i) or (d)(1)(ii) of this chapter) or other account (described in § 2550.404a–3(d)(1)(iii)(A) of this chapter), if such information is known at the time of the furnishing of this notice;

(*8*) The name, address and phone number of the provider of the individual retirement plan (described in § 2550.404a–3(d)(1)(i) or (d)(1)(ii) of this chapter), qualified survivor annuity, or other account (described in § 2550.404a–3(d)(1)(iii)(A) of this chapter), if such information is known at the time of the furnishing of this notice; and

(*9*) The name, address, and telephone number of the qualified termination administrator and, if different, the name, address and phone number of a contact person (or entity) for additional information concerning the termination and distribution of benefits under this section.

(B)(*1*) For purposes of paragraph (d)(2)(vi)(A) of this section, a notice shall be furnished to each participant or beneficiary in accordance with the requirements of § 2520.104b–1(b)(1) of this chapter to the last known address of the participant or beneficiary; and

(*2*) In the case of a notice that is returned to the plan as undeliverable, the qualified termination administrator shall, consistent with the duties of a fiduciary under section 404(a)(1) of ERISA, take steps to locate and provide notice to the participant or beneficiary prior to making a distribution pursuant to paragraph (d)(2)(vii) of this section. If, after such steps, the qualified termination administrator is unsuccessful in locating and furnishing notice to a participant or beneficiary, the participant or beneficiary shall be deemed to have been furnished the notice and to have failed to make an election within the 30-day period described in paragraph (d)(2)(vii) of this section.

(vii) *Distribute benefits.* (A) Distribute benefits in accordance with the form of distribution elected by each participant or beneficiary with spousal consent, if required.

(B) If the participant or beneficiary fails to make an election within 30 days from the date the notice described in paragraph (d)(2)(vi) of this section is furnished, distribute benefits—

(*1*) In accordance with § 2550.404a–3 of this chapter; or

(*2*) If a qualified termination administrator determines that the survivor annuity requirements in sections 401(a)(11) and 417 of the Internal Revenue Code (or section 205 of ERISA) prevent a distribution under paragraph (d)(2)(vii)(B)(*1*) of this section, in any manner reasonably determined to achieve compliance with those requirements.

(C) For purposes of distributions pursuant to paragraph (d)(2)(vii)(B) of this section, the qualified termination administrator may designate itself (or an affiliate) as the transferee of such proceeds, and invest such proceeds in a product in which it (or an affiliate) has an interest, only if such designation and investment is exempted from the prohibited transaction provisions under the Act pursuant to section 408(a) of the Act.

(viii) *Special Terminal Report for Abandoned Plans.* File the Special Terminal Report for Abandoned Plans in accordance with § 2520.103–13 of this chapter.

(ix) *Final Notice.* No later than two months after the end of the month in which the qualified termination administrator satisfies the requirements in paragraph (d)(2)(i) through (d)(2)(vii) of this section, furnish to the Office of Enforcement, Employee Benefits Security Administration, U.S. Department of Labor, 200 Constitution Avenue, NW., Washington, DC 20210, a notice,

signed and dated by the qualified termination administrator, containing the following information:

(A) The name, EIN, address, e-mail address, and telephone number of the qualified termination administrator, including the address and telephone number of the person signing the notice (or other contact person, if different from the person signing the notice);

(B) The name, account number, EIN, and plan number of the plan with respect to which the person served as the qualified termination administrator;

(C) A statement that the plan has been terminated and all the plan's assets have been distributed to the plan's participants and beneficiaries on the basis of the best available information;

(D) A statement that plan expenses were paid out of plan assets by the qualified termination administrator in accordance with the requirements of paragraph (d)(2)(v) of this section;

(E) If fees and expenses paid to the qualified termination administrator (or its affiliate) exceed by 20 percent or more the estimate required by paragraph (c)(3)(v)(B) of this section, a statement that actual fees and expenses exceeded estimated fees and expenses and the reasons for such additional costs;

(F) An identification of known delinquent contributions pursuant to paragraph (d)(2)(iii) of this section (if not already reported under paragraph (c)(3)(iv)(D)); and

(G) A statement that the information being provided in the notice is true and complete based on the knowledge of the qualified termination administrator, and that the information is being provided by the qualified termination administrator under penalty of perjury.

(3) The terms of the plan shall, for purposes of title I of ERISA, be deemed amended to the extent necessary to allow the qualified termination administrator to wind up the plan in accordance with this section.

(e) *Limited liability*. (1)(i) Except as otherwise provided in paragraph (e)(1)(ii) and (iii) of this section, to the extent that the activities enumerated in paragraph (d)(2) of this section involve the exercise of discretionary authority or control that would make the qualified termination administrator a fiduciary within the meaning of section 3(21) of the Act, the qualified termination administrator shall be deemed to satisfy its responsibilities under section 404(a) of the Act with respect to such activities, provided that the qualified termination administrator complies with the requirements of paragraph (d)(2) of this section.

(ii) A qualified termination administrator shall be responsible for the selection and monitoring of any service provider (other than monitoring a provider selected pursuant to paragraph (d)(2)(vii)(B) of this section) determined by the qualified termination administrator to be necessary to the winding up of the affairs of the plan, as well as ensuring the reasonableness of the compensation paid for such services. If a qualified termination administrator selects and monitors a service provider in accordance with the requirements of section 404(a)(1) of the Act, the qualified termination administrator shall not be liable for the acts or omissions of the service provider with respect to which the qualified termination administrator does not have knowledge.

(iii) For purposes of a distribution pursuant to paragraph (d)(2)(vii)(B)(*2*) of this section, a qualified termination administrator shall be responsible for the selection of an annuity provider in accordance with section 404 of the Act.

(2) Nothing herein shall be construed to impose an obligation on the qualified termination administrator to conduct an inquiry or review to determine whether or what breaches of fiduciary responsibility may have occurred with respect to a plan prior to becoming the qualified termination administrator for such plan.

(3) If assets of an abandoned plan are held by a person other than the qualified termination administrator, such person shall not be treated as in violation of section 404 (a) the Act solely on the basis that the person cooperated with and followed the directions of the qualified termination administrator in carrying out its responsibilities under this section with respect to such plan, provided that, in advance of any transfer or disposition of any assets at the

direction of the qualified termination administrator, such person confirms with the Department of Labor that the person representing to be the qualified termination administrator with respect to the plan is the qualified termination administrator recognized by the Department of Labor.

(f) *Continued liability of plan sponsor.* Nothing in this section shall serve to relieve or limit the liability of any person other than the qualified termination administrator due to a violation of ERISA.

(g) *Qualified termination administrator.* A termination administrator is qualified under this section only if:

(1) It is eligible to serve as a trustee or issuer of an individual retirement plan, within the meaning of section 7701(a)(37) of the Internal Revenue Code, and

(2) It holds assets of the plan that is considered abandoned pursuant to paragraph (b) of this section.

(h) *Affiliate.* (1) Except as provided in paragraph (h)(2) of this section, the term affiliate means any person directly or indirectly controlling, controlled by, or under common control with, the person; or any officer, director, partner or employee of the person.

(2) For purposes of paragraph (c)(3)(i)(C) of this section, the term affiliate means a 50 percent or more owner of a qualified termination administrator, or any person described in paragraph (h)(1) of this section that provides services to the plan.

(3) For purposes of paragraph (h)(1) of this section, the term control means the power to exercise a controlling influence over the management or policies of a person other than an individual.

(i) *Model notices.* Appendices to this section contain model notices that are intended to assist qualified termination administrators in discharging the notification requirements under this section. Their use is not mandatory. However, the use of appropriately completed model notices will be deemed to satisfy the requirements of paragraphs (b)(5), (c)(3), (d)(2)(vi), and (d)(2)(ix) of this section.

APPENDIX A TO § 2578.1

NOTICE OF INTENT TO TERMINATE PLAN

[*Date of notice*]

[*Name of plan sponsor*]
[*Last known address of plan sponsor*]

Re: [*Name of plan and account number or other identifying information*]

Dear [*Name of plan sponsor*]:

We are writing to advise you of our concern about the status of the subject plan. Our intention is to terminate the plan and distribute benefits in accordance with federal law if you do not contact us within 30 days of your receipt of this notice. See 29 CFR 2578.1.

Our basis for taking this action is that our records reflect that there have been no contributions to, or distributions from, the plan within the past 12 months. *{If the basis for sending this notice is under § 29 CFR 2578.1(b)(1)(i)(B), complete and include the sentence below rather than the sentence above.}* Our basis for taking this action is *{provide a description of the facts and circumstances indicating plan abandonment}*.

We are sending this notice to you because our records show that you are the sponsor of the subject plan. The U.S. Department of Labor requires that you be informed that, as a fiduciary or plan administrator or both, you may be personally liable for all costs, civil penalties, excise taxes, etc. as a result of your acts or omissions with respect to this plan. The termination of this plan by us will not relieve you of your liability for any such costs, penalties, taxes, etc. Federal law also requires us to notify the U.S. Department of Labor, Employee Benefits Security Administration, of the termination of any abandoned plan. For information about the federal law governing the termination of abandoned plans, you may contact the U.S. Department of Labor at [*telephone number of appropriate EBSA contact person*].

Please contact [*name, address, and telephone number of the person, office, or department that the sponsor must contact regarding the plan*] within 30 days in order to prevent this action.

Sincerely,

[*Name and address of qualified termination administrator or appropriate designee*]

APPENDIX B TO § 2578.1

NOTIFICATION OF PLAN ABANDONMENT AND INTENT TO SERVE AS QUALIFIED TERMINATION ADMINISTRATOR

[*Date of notice*]

Abandoned Plan Coordinator, Office of Enforcement
Employee Benefits Security Administration
U.S. Department of Labor
200 Constitution Ave., NW
Suite 600
Washington, DC, 20210

Re:	Plan Identification	Qualified Termination Administrator
	[*Plan name and plan number*]	[*Name*]
	[*EIN*]	[*Address*]
	[*Plan account number*]	[*E-mail address*]
	[*Address*]	[*Telephone number*]
	[*Telephone number*]	[*EIN*]

Abandoned Plan Coordinator:

Pursuant to 29 CFR 2578.1(b), we have determined that the subject plan is or may become abandoned by its sponsor. We are eligible to serve as a Qualified Termination Administrator for purposes of terminating and winding up the plan in accordance with 29 CFR 2578.1, and hereby elect to do so.

We find that {*check the appropriate box below and provide additional information as necessary*}:

☐ There have been no contributions to, or distributions from, the plan for a period of at least 12 consecutive months immediately preceding the date of this letter. Our records indicate that the date of the last contribution or distribution was {*enter appropriate date*}.

☐ The following facts and circumstances suggest that the plan is or may become abandoned by the plan sponsor {*add description below*}:

_____
_____
_____
_____

We have also determined that the plan sponsor {*check appropriate box below*}:

☐ No longer exists

☐ Cannot be located

☐ Is unable to maintain the plan

We have taken the following steps to locate or communicate with the known plan sponsor and have received no objection {*provide an explanation below*}:

_____

_____

_____

Part I – Plan Information

1. Estimated number of individuals (participants and beneficiaries) with accounts under the plan: [*number*]

2. Plan assets held by Qualified Termination Administrator:
   A. Estimated value of assets: [*value*]
   B. Months we have held plan assets, if less than 12: [*number*]

   C. Hard to value assets {*select "yes" or "no" to identify any assets with no readily ascertainable fair market value, and include for those identified assets the best known estimate of their value*}:

		Yes	No	
(a)	Partnership/joint venture interests	☐	☐	[*value*]
(b)	Employer real property	☐	☐	[*value*]
(c)	Real estate (other than (b))	☐	☐	[*value*]
(d)	Employer securities	☐	☐	[*value*]
(e)	Participant loans	☐	☐	[*value*]
(f)	Loans (other than (e))	☐	☐	[*value*]
(g)	Tangible personal property	☐	☐	[*value*]

3. Name and last known address and telephone number of plan sponsor:

   _____

   _____

   _____

4. Other:

   _____

Part II – Known Service Providers of the Plan

Name	Address	Telephone
1.		
2.		
3.		

Part III – Services and Related Expenses to be Paid

Services	Service Provider	Estimated Cost
1.		
2.		
3.		

Part IV – Investigation

In the past 24 months {*check one box*}:

☐ Neither we nor our affiliates are or have been the subject of an investigation, examination, or enforcement action by the Department, Internal Revenue Service, or Securities and Exchange Commission concerning such entity's conduct as a fiduciary or party in interest with respect to any plan covered by the Act.

☐ We or our affiliates are or have been the subject of an investigation, examination, or enforcement action by the Department, Internal Revenue Service, or Securities and Exchange Commission concerning such entity's conduct as a fiduciary or party in interest with respect to any plan covered by the Act.

Part V – Contact Person {*enter information only if different from signatory*}:

[*Name*]
[*Address*]
[*E-mail address*]
[*Telephone number*]

Under penalties of perjury, I declare that I have examined this notice and to the best of my knowledge and belief, it is true, correct and complete.

[*Signature*]
[*Title of person signing on behalf the Qualified Termination Administrator*]
[*Address, e-mail address, and telephone number*]

APPENDIX C TO § 2578.1

NOTICE OF PLAN TERMINATION

[*Date of notice*]

[*Name and last known address of plan participant or beneficiary*]

Re: [*Name of plan*]

Dear [*Name of plan participant or beneficiary*]:

We are writing to inform you that the [*name of plan*] (Plan) has been terminated pursuant to regulations issued by the U.S. Department of Labor. The Plan was terminated because it was abandoned by [*name of the plan sponsor*].

We have determined that you have an interest in the Plan, either as a plan participant or beneficiary. Your account balance on [*date*] is/was [*account balance*]. We will be distributing this money as permitted under the terms of the Plan and federal regulations. The actual amount of your distribution may be more or less than the amount stated in this letter depending on investment gains or losses and the administrative cost of terminating the Plan and distributing your benefits.

Your distribution options under the Plan are {*add a description of the Plan's distribution options*}. It is very important that you elect one of these forms of distribution and inform us of your election. The process for informing us of this election is {*enter a description of the election process established by the qualified termination administrator*}.

{*Select the next paragraph from options 1 through 3, as appropriate.*}

{*Option 1: If this notice is for a participant or beneficiary, complete and include the following paragraph provided the account balance does not meet the conditions of §2550.404a-3(d)(1)(iii).*}

If you do not make an election within 30 days from your receipt of this notice, your account balance will be transferred directly to an individual retirement plan (inherited individual retirement plan in the case of a nonspouse beneficiary) maintained by {*insert the name, address, and phone number of the provider if known, other wise insert the following language* [a bank or insurance company or other similar financial institution]}. Pursuant to federal law, your money in the individual retirement plan would then be invested in an investment product designed to preserve principal and provide a reasonable rate of return and liquidity. {*If fee information is known, include the following sentence:* Should your money be transferred into an individual retirement plan, [*name of the financial institution*] charges the following fees for its services: {*add a statement of fees, if any, that will be paid from the participant or beneficiary's individual retirement plan*}.}

{*Option 2: If this notice is for a participant or beneficiary whose account balance meets the conditions of §2550.404a-3(d)(1)(iii), complete and include the following paragraph.*}

If you do not make an election within 30 days from your receipt of this notice, and your account balance is $1,000 or less, federal law permits us to transfer your balance to an interest-bearing federally insured bank account, to the unclaimed property fund of the State of your last known address, or to an individual retirement plan (inherited individual retirement plan in the case of a nonspouse beneficiary). Pursuant to federal law, your money, if transferred to an individual retirement plan would then be invested in an investment product designed to preserve principal and provide a reasonable rate of return and liquidity. {*If known, include the name, address, and telephone number of the financial institution or State fund into which the individual's account balance will be transferred or deposited. If the individual's account balance is to be transferred to a financial institution and fee information is known, include the following sentence:* Should your money be transferred into a plan or account, [*name of the financial institution*] charges the following fees for its services: {*add a statement of fees, if any, that will be paid from the individual's account*}.}

{*Option 3: If this notice is for a participant or participant's spouse whose distribution is subject to the survivor annuity requirements in sections 401(a)(11) and 417 of the Internal Revenue Code (or section 205 of ERISA), complete and include the following paragraph.*}

If you do not make an election within 30 days from your receipt of this notice, your account balance will be distributed in the form of a qualified joint and survivor annuity or qualified preretirement annuity as required by the Internal Revenue Code. {*If the name of the annuity provider is known, include the following sentence:* The name of the annuity provider is [*name, address and phone number of the provider*].}

For more information about the termination, your account balance, or distribution options, please contact [*name, address, and telephone number of the qualified termination administrator and, if different, the name, address, and telephone number of the appropriate contact person*].

Sincerely,
[*Name of qualified termination administrator or appropriate designee*]

APPENDIX D TO § 2578.1

FINAL NOTICE

[*Date of notice*]

Abandoned Plan Coordinator, Office of Enforcement
Employee Benefits Security Administration
U.S. Department of Labor
200 Constitution Ave., NW
Suite 600
Washington, DC, 20210

Re:	Plan Identification	Qualified Termination Administrator
	[*Plan name and plan number*]	[*Name*]
	[*Plan account number*]	[*Address and e-mail address*]
	[*EIN*]	[*Telephone number*]
		[*EIN*]

Abandoned Plan Coordinator:

General Information

The termination and winding-up process of the subject plan has been completed pursuant to 29 CFR 2578.1. Benefits were distributed to participants and beneficiaries on the basis of the best available information pursuant to 29 CFR 2578.1(d)(2)(i). Plan expenses were paid out of plan assets pursuant to 29 CFR 2578.1(d)(2)(v).

{*Include and complete the next section, entitled "Contact Person," only if the contact person is different from the signatory of this notice.*}

Contact Person

[*Name*]
[*Address and e-mail address*]
[*Telephone number*]

{*Include and complete the next section, entitled "Expenses Paid to Qualified Termination Administrator," only if fees and expenses paid to the QTA (or its affiliate) exceeded by 20 percent or more the estimate required by 29 CFR 2578.1(c)(3)(v)(B).*}

Expenses Paid to Qualified Termination Administrator

The actual fees and/or expenses we received in connection with winding up the Plan exceeded by {*insert either*: [20 percent or more] *or* [*enter the actual percentage*]} the

estimate required by 29 CFR 2578.1(c)(3)(v)(B). The reason or reasons for such additional costs are {*provide an explanation of the additional costs*}.

Other

_____
_____
_____
_____

Under penalties of perjury, I declare that I have examined this notice and to the best of my knowledge and belief, it is true, correct and complete.

[*Signature*]
[*Title of person signing on behalf the Qualified Termination Administrator*]
[*Address, e-mail address, and telephone number*]

Attachment

[71 FR 20837, Apr. 21, 2006; 71 FR 29073, May 19, 2006; 72 FR 7522, Feb. 15, 2007; 73 FR 58465, Oct. 7, 2008]

SUBCHAPTER H [RESERVED]

SUBCHAPTER I—TEMPORARY BONDING RULES UNDER THE EMPLOYEE RETIREMENT INCOME SECURITY ACT OF 1974

PART 2580—TEMPORARY BONDING RULES

Subpart A—Criteria for Determining Who Must Be Bonded

Sec.
2580.412–1 Statutory provisions.
2580.412–2 Plans exempt from the coverage of section 13.
2580.412–3 Plan administrators, officers and employees for purposes of section 13.
2580.412–4 ''Funds or other property'' of a plan.
2580.412–5 Determining when ''funds or other property'' belong to a plan.
2580.412–6 Determining when ''funds or other property'' are ''handled'' so as to require bonding.

Subpart B—Scope and Form of the Bond

2580.412–7 Statutory provision—scope of the bond.
2580.412–8 The nature of the duties or activities to which the bonding requirement relates.
2580.412–9 Meaning of fraud or dishonesty.
2580.412–10 Individual or schedule or blanket form of bonds.

Subpart C—Amount of the Bond

2580.412–11 Statutory provision.
2580.412–12 Relationship of determining the amount of the bond to ''handling''.
2580.412–13 The meaning of ''funds'' in determining the amount of the bond.
2580.412–14 Determining the amount of funds ''handled'' during the preceding reporting year.
2580.412–15 Procedures to be used for estimating the amount of funds to be ''handled'' during the current reporting year in those cases where there is no preceding reporting year.
2580.412–16 Amount of bond required in given types of bonds or where more than one plan is insured in the same bond.
2580.412–17 Bonds over $500,000.

Subpart D—General Bond Rules

2580.412–18 Naming of insureds.
2580.412–19 Term of the bond, discovery period, other bond clauses.
2580.412–20 Use of existing bonds, separate bonds and additional bonding.

Subpart E—Qualified Agents, Brokers and Surety Companies for the Placing of Bonds

2580.412–21 Corporate sureties holding grants of authority from the Secretary of the Treasury.
2580.412–22 Interests held in agents, brokers and surety companies.

Subpart F—Exemptions

BONDS PLACED WITH CERTAIN REINSURING COMPANIES

2580.412–23 Exemption.
2580.412–24 Conditions of exemption.

BONDS PLACED WITH UNDERWRITERS AT LLOYDS, LONDON

2580.412–25 Exemption.
2580.412–26 Conditions of exemption.

BANKING INSTITUTIONS SUBJECT TO FEDERAL REGULATION

2580.412–27 Exemption.
2580.412–28 Conditions of exemption.

SAVINGS AND LOAN ASSOCIATIONS SUBJECT TO FEDERAL REGULATION

2580.412–29 Exemption.
2580.412–30 Conditions of exemption.

INSURANCE CARRIERS, SERVICE AND OTHER SIMILAR ORGANIZATIONS

2580.412–31 Exemption.
2580.412–32 Conditions of exemption.

Subpart G—Prohibition Against Bonding by Parties Interested in the Plan

2580.412–33 Introductory statement.
2580.412–34 General.
2580.412–35 Disqualification of agents, brokers and sureties.
2580.412–36 Application of 13(c) to ''party in interest''.

AUTHORITY: Sec. 505, Pub. L. 93–406, 88 Stat. 894 (29 U.S.C. 1135); sec. 412(e), Pub. L. 93–406, 88 Stat. 889 (29 U.S.C. 1112).

SOURCE: 28 FR 14403, Dec. 27, 1963, unless otherwise noted. Redesignated at 50 FR 26706, June 28, 1985.

Subpart A—Criteria for Determining Who Must Be Bonded

§ 2580.412–1 Statutory provisions.

Section 13(a) of the Welfare and Pension Plans Disclosure Act of 1958, as amended, states, in part, that:

> Every administrator, officer and employee of any employee welfare benefit plan or of any employee pension benefit plan subject to this Act who handles funds or other property of such plan shall be bonded as herein provided; except that, where such plan is one under which the only assets from which benefits are paid are the general assets of a union or of an employer, the administrator, officers and employees of such plan shall be exempt from the bonding requirements of this section.
>
> * * * Such bond shall provide protection to the plan against loss by reason of acts of fraud or dishonesty on the part of such administrator, officer, or employee, directly or through connivance with others.

§ 2580.412–2 Plans exempt from the coverage of section 13.

Only completely unfunded plans in which the plan benefits derive solely from the general assets of a union[1] or employer, and in which plan assets are not segregated in any way from the general assets of a union or employer and remain solely within the general assets until the time of distribution of benefits, shall be exempt from the bonding provisions. As such, the language ''where such plan is one under which the only assets from which benefits are paid are the general assets of a union or of an employer'' shall not be deemed to exempt a plan from the coverage of section 13 if the plan is one in which:

(a) Any benefits thereunder are provided or underwritten by an insurance carrier or service or other organization, or

(b) There is a trust or other separate entity to which contributions are made or out of which benefits are paid, or

(c) Contributions to the plan are made by the employees, either through withholding or otherwise, or from any source other than the employer or union involved, or

(d) There is a separately maintained bank account or separately maintained books and records for the plan or other evidence of the existence of a segregrated or separately maintained or administered fund out of which plan benefits are to be provided.

As a general rule, the presence of special ledger accounts or accounting entries for plan funds as an integral part of the general books and records of an employer or union shall not, in and of itself, be deemed sufficient evidence of segregation of plan funds to take a plan out of the exempt category, but shall be considered along with the other factors and criteria discussed above in determining whether the exemption applies. Again, it should be noted, however, that the fact that a plan is not exempt from the coverage of section 13 does not necessarily mean that its administrators, officers or employees are required to be bonded. As stated previously, this will depend in each case on whether or not they ''handle'' funds or other property of the plan within the meaning of section 13 and under the standards set forth in § 2580.412–6.

§ 2580.412–3 Plan administrators, officers and employees for purposes of section 13.

(a) *Administrator*. (1) For purposes of the bonding provisions, the term ''administrator'' is defined in the same manner as under section 5 of the Act and refers to:

(i) The person or persons designated by the terms of the plan or the collective bargaining agreement with responsibility for the ultimate control, disposition, or management of the money received or contributed; or

(ii) In the absence of such designation, the person or persons actually responsible for the control, disposition, or management of the money received or contributed, irrespective of whether

[1] For purposes of the exemption discussed in § 2580.412–2, the term ''union'' shall include ''* * * any organization of any kind or any agency or employee representation committee, association, group, or plan, in which employees participate and which exists for the purpose in whole or in part, of dealing with employers concerning an employee welfare or pension benefit plan, or other matters incidental to employment relationships * * *'' (29 U.S.C. 302(a)(3)).

such control, disposition, or management is exercised directly or through an agent or trustee designated by such person or persons.

(2) Where by virtue of this definition, or regulations, interpretations or opinions issued with respect thereto, the term embodies natural persons such as members of the board of trustees of a trust, the bonding requirements shall apply to such persons.

(3) However, when by virtue of this definition or regulations, interpretations, or opinions issued with respect thereto, the administrator in a given case in an entity such as a partnership, corporation, mutual company, joint stock company, trust, unincorporated organization, union or employees' beneficiary association, the term shall be deemed to apply, in meeting the bonding requirements, only to those natural persons who:

(i) Are vested under the authority of the entity-administrator with the responsibility for carrying out functions constituting control, disposition or management of the money received or contributed within the definition of administrator, or who, acting on behalf of or under the actual or apparent authority of the entity-administrator, actually perform such functions, and who

(ii) ''Handle'' funds or other property of the plan within the meaning of these regulations.

(b) *Officers*. For purposes of the bonding provisions, the term ''officer'' shall include any person designated by the terms of a plan or collective bargaining agreement as an officer, any person performing or authorized to perform executive functions of the plan or any member of a board of trustees or similar governing body of a plan. The term shall include such persons regardless of whether they are representatives of or selected by an employer, employees or an employee organization. In its most frequent application the term will emcompass those natural persons appointed or elected as officers of the plan or as members of boards or committees performing executive or supervisory functions for the plan, but who do not fall within the definition of administrator.

(c) *Employees*. For purposes of the bonding provisions the term ''employee'' shall, to the extent a person performs functions not falling within the definition of officer or administrator, include any employee who performs work for or directly related to a covered plan, regardless of whether technically he is employed, directly or indirectly, by or for a plan, a plan administrator, a trust, or by an employee organization or employer within the meaning of section 3(3) or 3(4) of the Act.

(d) *Other persons covered*. For purposes of the bonding provisions, the terms ''administrator, officer, or employee'' shall include any persons performing functions for the plan normally performed by administrators, officers, or employees of a plan. As such, the terms shall include persons indirectly employed, or otherwise delegated, to perform such work for the plan, such as pension consultants and planners, and attorneys who perform ''handling'' functions within the meaning of § 2580.412–6. On the other hand, the terms would not include those brokers or independent contractors who have contracted for the performance of functions which are not ordinarily carried out by the administrators, officers, or employees of a plan, such as securities, brokers who purchase and sell securities or armored motor vehicle companies.

[28 FR 14403, Dec. 27, 1963, as amended at 34 FR 5158, Mar. 13, 1969. Redesignated at 50 FR 26706, June 28, 1985]

§ 2580.412–4 "Funds or other property" of a plan.

The affirmative requirement for bonding persons falling within the definition of administrator, officer or employee is applicable only if they handle ''funds or other property'' of the plan concerned. The term ''funds or other property'' is intended to encompass all property which is used or may be used as a source for the payment of benefits to plan participants. It does not include permanent assets used in the operation of the plan such as land and buildings, furniture and fixtures or office and delivery equipment used in the operation of the plan. It does include all items in the nature of quick assets,

such as cash, checks and other negotiable instruments, government obligations and marketable securities. It also includes all other property or items convertible into cash or having a cash value and held or acquired for the ultimate purpose of distribution to plan participants or beneficiaries. In the case of a plan which has investments, this would include all the investments of the plan even though not in the nature of quick assets, such as land and buildings, mortgages, and securities in closely held corporations. However, in a given case, the question of whether a person was ''handling'' such ''funds or other property'' so as to require bonding would depend on whether his relationship to this property was such that there was a risk that he, alone or in connivance with others, could cause a loss of such ''funds or other property'' through fraud or dishonesty.

§ 2580.412–5 Determining when "funds or other property" belong to a plan.

With respect to any contribution to a plan from any source, including employers, employees or employee organizations, the point at which any given item or amount becomes ''funds or other property'' of a plan for purposes of the bonding provisions shall be determined as described in this section.

(a) Where the plan administrator is a board of trustees, person or body other than the employer or employee organization establishing the plan, a contribution to the plan from any source shall become ''funds or other property'' of the plan at the time it is received by the plan administrator. Employee contributions collected by an employer and later turned over to the plan administrator would not become ''funds or other property'' of the plan until receipt by the plan administrator.

(b) Where the employer or employee organization establishing the plan is itself the plan administrator:

(1) Contributions from employees or other persons who are plan participants would normally become ''funds or other property'' of the plan at the time they are received by the employer or employee organization, except however that contributions made by withholding from employees' salaries shall not be considered ''funds or other property'' of the plan for purposes of the bonding provisions so long as they are retained in and not segregated in any way from the general assets of the withholding employer or employee organization.

(2) Contributions made to a plan by such employer or employee organization and contributions made by withholdings from employees' salaries would normally become ''funds or other property'' of the plan if and when they are taken out of the general assets of the employer or employee organization and placed in a special bank account or investment account; or identified on a separate set of books and records; or paid over to a corporate trustee or used to purchase benefits from an insurance carrier or service or other organization; or otherwise segregated, paid out or used for plan purposes, whichever shall occur first. Thus, if a plan is operated by a corporate trustee and no segregation from general assets is made of monies to be turned over to the corporate trustee prior to the actual transmittal of such monies, the contribution represented in the transmission becomes ''funds or other property'' of the plan at the time of receipt by the corporate trustee. On the other hand, if a special fund is first established from which monies are paid over to the corporate trustee, a given item would become ''funds or other property'' of the plan at the time it is placed in the special fund. Similarly, if plan benefits are provided through the medium of an insurance carrier or service or other organization and no segregation from general assets of monies used to purchase such benefits is made prior to turning such monies over to the organization contracting to provide benefits, plan funds or other property come into being at the time of receipt of payment for such benefits by the insurance carrier or service or other organization. In such a case, the ''funds or other property'' of the plan would be represented by the insurance contract or other obligations to pay benefits and would not be normally subject to ''handling''. Bonding would not be required for any person with respect to the purchase of such benefits directly from general assets nor with respect to

the bare existence of the contract obligation to pay benefits. However, if the particular, arrangement were such that monies derived from, or by virtue of, the contract did subsequently flow back to the plan, bonding may be required if such monies returning to the plan are handled by plan administrators, officers or employees. (Further discussion on bonding of insured plans is contained in § 2580.412–6(b)(7)).

§ 2580.412–6 Determining when "funds or other property" are "handled" so as to require bonding.

(a) *General scope of term.* (1) A plan administrator, officer, or employee shall be deemed to be ''handling'' funds or other property of a plan, so as to require bonding under section 13, whenever his duties or activities with respect to given funds or other property are such that there is a risk that such funds or other property could be lost in the event of fraud or dishonesty on the part of such person, acting either alone or in collusion with others. While ordinarily, those plan administrators, officers and employees who ''handle'' within the meaning of section 13 will be those persons with duties related to the receipt, safekeeping and disbursement of funds, the scope of the term ''handles'' and the prohibitions of paragraph (b) of section 13 shall be deemed to encompass any relationship of an administrator, officer or employee with respect to funds or other property which can give rise to a risk of loss through fraud or dishonesty. This shall include relationships such as those which involve access to funds or other property or decisionmaking powers with respect to funds or property which can give rise to such risk of loss.

(2) Section 13 contains no exemptions based on the amount or value of funds or other property ''handled'', nor is the determination of the existence of risk of loss based on the amount involved. However, regardless of the amount involved, a given duty or relationship to funds or other property shall not be considered ''handling'', and bonding is not required, where it occurs under conditions and circumstances in which the risk that a loss will occur through fraud or dishonesty is negligible. This may be the case where the risk of mishandling is precluded by the nature of the funds or other property (e.g., checks, securities or title papers which can not be negotiated by the persons performing duties with respect to them). It may also be the case where significant risk of mishandling in the performance of duties of an essentially clerical character is precluded by fiscal controls.

(b) *General criteria for determining ''handling''.* Subject to the application of the basic standard of risk of loss to each situation, general criteria for determining whether there is ''handling'' so as to require bonding are:

(1) *Physical contact.* Physical contact with cash, checks or similar property generally constitutes ''handling''. However, persons who from time to time perform counting, packaging, tabulating, messenger or similar duties of an essentially clerical character involving physical contact with funds or other property would not be ''handling'' when they perform these duties under conditions and circumstances where risk of loss is negligible because of factors such as close supervision and control or the nature of the property.

(2) *Power to exercise physical contact or control.* Whether or not physical contact actually takes place, the power to secure physical possession of cash, checks or similar property through factors such as access to a safe deposit box or similar depository, access to cash or negotiable assets, powers of custody or safekeeping, power to withdraw funds from a bank or other account generally constitutes ''handling'', regardless of whether the person in question has specific duties in these matters and regardless of whether the power or access is authorized.

(3) *Power to transfer to oneself or a third party or to negotiate for value.* With respect to property such as mortgages, title to land and buildings, or securities, while physical contact or the possibility of physical contact may not, of itself, give rise to risk of loss so as to constitute ''handling'', a person shall be regarded as ''handling'' such items where he, through actual or apparent authority, can cause those items to be transferred to himself or to a third party or to be negotiated for value.

(4) *Disbursement.* Persons who actually disburse funds or other property, such as officers or trustees authorized to sign checks or other negotiable instruments, or persons who make cash disbursements, shall be considered to be ''handling'' such funds or property. Whether other persons who may influence, authorize or direct disbursements or the signing or endorsing of checks or similar instruments will be considered to be ''handling'' funds or other property shall be determined by reference to the particular duties or responsibilities of such persons as applied to the basic criteria of risk of loss.

(5) *Signing or endorsing checks or other negotiable instruments.* In connection with disbursements or otherwise, any persons with the power to sign or endorse checks or similar instruments or otherwise render them transferable, whether individually or as co-signers with one or more persons, shall each be considered to be ''handling'' such funds or other property.

(6) *Supervisory or decision making responsibility.* To the extent a person's supervisory or decision making responsibility involves factors in relationship to funds discussed in paragraph (b)(1), (2), (3), (4), or (5) of this section, such persons shall be considered to be ''handling'' in the same manner as any person to whom the criteria of those paragraphs apply. To the extent that only general responsibility for the conduct of the business affairs of the plan is involved, including such functions as approval of contracts, authorization of disbursements, auditing of accounts, investment decisions, determination of benefit claims and similar responsibilities, such persons shall be considered to be ''handling'' whenever the facts of the particular case raise the possibility that funds or other property of the plan are likely to be lost in the event of their fraud or dishonesty. The mere fact of general supervision would not necessarily, in and of itself, mean that such persons are ''handling.'' Factors to be accorded weight are the system of fiscal controls, the closeness and continuity of supervision, who is in fact charged with, or actually exercising final responsibility for determining whether specific disbursements, investments, contracts, or benefit claims are bona fide, regular and made in accordance with the applicable trust instrument or other plan documents.

(i) For example, persons having supervisory or decisionmaking responsibility would be ''handling'' to the extent they:

(*a*) Act in the capacity of plan ''administrator'' and have ultimate responsibility for the plan within the meaning of the definition of ''administrator'' (except to the extent that it can be shown that such persons could not, in fact, cause a loss to the plan to occur through fraud or dishonesty);

(*b*) Exercise close supervision over corporate trustees or other parties charged with dealing with plan funds or other property; exercise such close control over investment policy that they, in effect, determine all specific investments;

(*c*) Conduct, in effect, a continuing daily audit of the persons who ''handle'' funds;

(*d*) Regularly review and have veto power over the actions of a disbursing officer whose duties are essentially ministerial.

(ii) On the other hand, persons having supervisory or decisionmaking responsibility would not be ''handling'' to the extent:

(*a*) They merely conduct a periodic or sporadic audit of the persons who ''handle'' funds;

(*b*) Their duties with respect to investment policy are essentially advisory;

(*c*) They make a broad general allocation of funds or general authorization of disbursements intended to permit expenditures by a disbursing officer who has final responsibility for determining the propriety of any specific expenditure and making the actual disbursement;

(*d*) A bank or corporate trustee has all the day to day functions of administering the plan;

(*e*) They are in the nature of a Board of Directors of a corporation or similar authority acting for the corporation rather than for the plan and do not perform specific functions with respect to the operations of the plan.

(7) *Insured plan arrangements.* In many cases, plan contributions made

by employers or employee organizations or by withholding from employee's salaries are not segregated from the general assets of the employer or employee organization until payment for purchase of benefits from an insurance carrier or service or other organization. No bonding is required with respect to the payment of premiums or other payments made to purchase such benefits directly from general assets, nor with respect to the bare existence of the contract obligation to pay benefits. Such arrangements would not normally be subject to bonding except to the extent that monies returned by way of benefit payments, cash surrender, dividends, credits or otherwise, and which by the terms of the plan belonged to the plan (rather than to the employer, employee organization, insurance carrier or service or other organization) were subject to ''handling'' by plan administrators, officers or employees.

Subpart B—Scope and Form of the Bond

§ 2580.412–7 Statutory provision—scope of the bond.

The statute requires that the bond shall provide protection to the plan against loss by reason of acts of fraud or dishonesty on the part of a plan administrator, officer, or employee, directly or through connivance with others.

§ 2580.412–8 The nature of the duties or activities to which the bonding requirement relates.

The bond required under section 13 is limited to protection for those duties and activities from which loss can arise through fraud or dishonesty. It is not required to provide the same scope of coverage that is required in faithful discharge of duties bonds under the Labor-Management Reporting and Disclosure Act of 1959 or in the faithful performance bonds of public officials.

§ 2580.412–9 Meaning of fraud or dishonesty.

The term ''fraud or dishonesty'' shall be deemed to encompass all those risks of loss that might arise through dishonest or fraudulent acts in handling of funds as delineated in § 2580.412–6. As such, the bond must provide recovery for loss occasioned by such acts even though no personal gain accrues to the person committing the act and the act is not subject to punishment as a crime or misdemeanor, provided that within the law of the state in which the act is committed, a court would afford recovery under a bond providing protection against fraud or dishonesty. As usually applied under state laws, the term ''fraud or dishonesty'' encompasses such matters as larceny, theft, embezzlement, forgery, misappropriation, wrongful abstraction, wrongful conversion, willful misapplication or any other fraudulent or dishonest acts. For the purposes of section 13, other fraudulent or dishonest acts shall also be deemed to include acts where losses result through any act or arrangement prohibited by title 18, section 1954 of the U.S. Code.

§ 2580.412–10 Individual or schedule or blanket form of bonds.

Section 13 provides that ''any bond shall be in a form or of a type approved by the Secretary, including individual bonds or schedule or blanket forms of bonds which cover a group or class''. Any form of bond which may be described as individual, schedule or blanket in form or any combination of such forms of bonds shall be acceptable to meet the requirements of section 13, provided that in each case, the form of the bond, in its particular clauses and application, is not inconsistent with meeting the substantive requirements of the statute for the persons and plan involved and with meeting the specific requirements of the regulations in this part. Basic types of bonds in general usage are:

(a) *Individual bond.* Covers a named individual in a stated penalty.

(b) *Name schedule bond.* Covers a number of named individuals in the respective amounts set opposite their names.

(c) *Position schedule bond.* Covers each of the occupants of positions listed in the schedule in the respective amounts set opposite such positions.

(d) *Blanket bonds.* Cover all the insured's officers and employees with no schedule or list of those covered being necessary and with all new officers and

employees bonded automatically, in a blanket penalty which takes two forms—an aggregate penalty bond and a multiple penalty bond which are described below:

(1) The aggregate penalty blanket bond such as the Commercial Blanket Bond; the amount of the bond is available for dishonesty losses caused by persons covered thereunder or losses in which such person is concerned or implicated. Payment of loss on account of any such person does not reduce the amount of coverage available for losses other than those caused by such person or in which he was concerned or implicated.

(2) The multiple penalty bond such as the Blanket Position Bond giving separate coverage on each person for a uniform amount—the net effect being the same as though a separate bond were issued on each person covered thereunder and all of such bonds being for a uniform amount.

NOTE: For the purpose of section 13, blanket bonds which are either aggregate penalty or multiple penalty in form shall be permissible if they otherwise meet the requirements of the Act and the regulations in this part.

Bonding, to the extent required, of persons indirectly employed, or otherwise delegated, to perform functions for the plan which are normally performed by ''administrators, officers, or employees'' as described in § 2580.412–3(d) may be accomplished either by including them under individual or schedule bonds or other forms of bonds meeting the requirements of the Act, or naming them in what is known under general trade usage as an ''Agents Rider'' attached to a Blanket Bond.

Subpart C—Amount of the Bond

§ 2580.412–11 Statutory provision.

Section 13 requires that the amount of the bond be fixed at the beginning of each calendar, policy or other fiscal year, as the case may be, which constitutes the reporting year of the plan for purposes of the reporting provisions of the Act. The amount of the bond shall be not less than 10 per centum of the amount of funds handled, except that any such bond shall be in at least the amount of $1,000 and no such bond shall be required in an amount in excess of $500,000: *Provided,* That the Secretary, after due notice and opportunity for hearing to all interested parties, and after consideration of the record, may prescribe an amount in excess of $500,000, which in no event shall exceed 10 per centum of the funds handled. For purposes of fixing the amount of such bond, the amount of funds handled shall be determined by the funds handled by the person, group, or class to be covered by such bond and by their predecessor or predecessors, if any, during the preceding reporting year, or if the plan has no preceding reporting year, the amount of funds to be handled during the current reporting year by such person, group, or class, estimated as provided in the regulations in this part. With respect to persons required to be bonded, section 13 shall be deemed to require the bond to insure from the first dollar of loss up to the requisite bond amount and not to permit the use of deductible or similar features whereby a portion of the risk within such requisite bond amount is assumed by the insured. Any request for variance from these requirements shall be made pursuant to the provisions of section 13(e) of the Act.

§ 2580.412–12 Relationship of determining the amount of the bond to "handling".

A determination of whether persons falling within the definition of administrator, officer or employee are required to be bonded depends on whether they ''handle'' funds or other property. Determining the amount of the bond is an aspect of the same process in that it requires a determination of what funds or other property are being handled or what amounts of funds or other property are subject to risk of loss with respect to the duties or powers of an administrator, officer or employee of a covered plan. Once this calculation is made, the required amount for which that person must be covered by a bond, either by himself or as a part of a group or class being bonded under a blanket or schedule bond, is not less than 10 percent of the amount ''handled'' or $1,000, whichever is the greater amount, except that no such

bond shall be required in an amount greater than $500,000 by virtue of these regulations. (See § 2580.412–17.)

§ 2580.412–13 The meaning of "funds" in determining the amount of the bond.

The amount of the bond depends on the amount of ''funds'' ''handled'', and shall be sufficient to provide bonding protection against risk of loss through fraud or dishonesty for all plan funds, including other property similar to funds or in the nature of funds. As such, the term ''funds'' shall be deemed to include and be equivalent to ''funds and other property'' of the plan as described in § 2580.412–4. With respect to any item of ''funds or other property'' which does not have a cash or readily ascertainable market value, the value of such property may be estimated on such basis as will reasonably reflect the loss the plan might suffer if it were mishandled.

§ 2580.412–14 Determining the amount of funds "handled" during the preceding reporting year.

(a) The amount of funds ''handled'' by each person falling within the definition of administrator, officer, or employee (or his predecessors) during the preceding reporting year shall be the total of funds subject to risk of loss, within the meaning of the definition of ''handling'' (see § 2580.412–6), through acts of fraud or dishonesty, directly or in connivance with others, by such person or his predecessors during the preceding reporting year. The relationship of the determination of the amount of funds ''handled'' to the determination of who is ''handling'' can best be illustrated by a situation that commonly arises with respect to executive personnel of a plan, where a bank or corporate trustee has the responsibility for the receipt, safekeeping, physical handling and investment of a plan's assets and the basic function of the executive personnel is to authorize payments to beneficiaries and payments for services to the corporate trustee, the actuary and the employees of the plan itself. Normally, in any given year, only a small portion of the plan's total assets is disbursed, and the question arises as to whether an administrator or executive personnel are ''handling'' only the amounts actually disbursed each year or whether they are ''handling'' the total amounts of the assets. The answer to this question depends on the same basic criterion that governs all questions of ''handling'', namely, the possibility of loss. If the authorized duties of the persons in question are strictly limited to disbursements of benefits and payments for services, and the fiscal controls and practical realities of the situation are such that these persons cannot gain access to funds which they are not legitimately allowed to disburse, the amount on which the bond is based may be limited to the amount actually disbursed in the reporting year. This would depend, in part, on the extent to which the bank or corporate trustee which has physical possession of the funds also has final responsibility for questioning and limiting disbursements from the plan, and on whether this responsibility is embodied in the original plan instruments. On the other hand, where insufficient fiscal controls exist so that the persons involved have free access to, or can obtain control of, the total amount of the fund, the bond shall reflect this fact and the amount ''handled'' shall be based on the total amount of the fund. This would generally occur with respect to persons such as the ''administrator'', regardless of what functions are performed by a bank or corporate trustee, since the ''administrator'' by definition retains ultimate power to revoke any arrangement with a bank or corporate trustee. In such case, the ''administrator'' would have the power to commit the total amount of funds involved to his control, unless the plan itself or other specific agreement (1) prevents the ''administrator'' from so doing or (2) requires that revocation cannot be had unless a new agreement providing for similar controls and limitations on the ''handling'' of funds is simultaneously entered into.

(b) Where the circumstances of ''handling'' are such that the total amount of a given account or fund is subject to ''handling'', the amount ''handled'' shall include the total of all such funds on hand at the beginning of

the reporting year, plus any items received during the year for any reason, such as contributions or income, or items received as a result of sales, investments, reinvestment, interest or otherwise. It would not, however, be necessary to count the same item twice in arriving at the total funds ''handled'' by a given person during a reporting year. For example, a given person may have various duties or powers involving receipt, safekeeping or disbursement of funds which would place him in contact with the same funds at several times during the same year. Different duties, however, would not make it necessary to count the same item twice in arriving at the total ''handled'' by him. Similarly, where a person has several different positions with respect to a plan, it would not be necessary to count the same funds each time that they are ''handled'' by him in these different positions, so long as the amount of the bond is sufficient to meet the 10 percent requirement with respect to the total funds ''handled'' by him subject to risk or loss through fraud or dishonesty, whether acting alone or in collusion with others. In general, once an item properly within the category of ''funds,'' has been counted as ''handled'' by a given person, it need not be counted again even though it should subsequently be ''handled'' by the same person during the same year.

§ 2580.412–15 Procedures to be used for estimating the amount of funds to be "handled" during the current reporting year in those cases where there is no preceding reporting year.

If for any reason a plan does not have a complete preceding reporting year, the amount ''handled'' by persons required to be covered by a bond shall be estimated at the beginning of the calendar, policy or other fiscal year, as the case may be, which would constitute either the operating year or the reporting year of the plan, whichever shall occur first, as follows:

(a) In the case of a plan having a previous experience year, even though it has no preceding reporting year, the estimate of the amount to be ''handled'' for any person required to be covered shall be based on the experience in the previous year by applying the same standards and criteria as in a plan which has a preceding reporting year. Similarly, where a plan is recently established, but has had, at the time a bond is obtained, sufficient experience to reasonably estimate a complete year's experience for persons required to be bonded, the amount of funds to be ''handled'' shall be projected to the complete year on the basis of the period in which the plan has had experience, unless, to the knowledge of the plan administrator, the given period of experience is so seasonal or unrepresentative of the complete year's experience as not to provide a reasonable basis for projecting the estimate for the complete year.

(b) Where a plan does not have any prior experience sufficient to allow it to estimate the amount ''handled'' in the manner outlined in paragraph (a) of this section, the amount to be ''handled'' by the administrators, officers and employees of the plan during the current reporting year shall be that amount initially required to fund or set up the plan, plus the amount of contributions required to be made under the plan formula from any source during the current reporting year. In most cases, the amount of contributions will be calculated by multiplying the total yearly contribution per participant (required by the plan formula from either employers, employees, employer organizations or any other source) by the number of participants in the plan at the beginning of such reporting year. In cases where the per capita contribution cannot readily be determined, such as in the case of certain insured plans covered by the Act, the amount of contributions shall be estimated on the amount of insurance premiums which are actuarially estimated as necessary to support the plan, or on such other actuarially estimated basis as may be applicable. In the case of a newly formed profit-sharing plan covered by the Act, if the employer establishing the plan has a previous year of experience, the amount of contributions required by the plan formula shall be estimated on the basis of the profits of the previous year. The amount of the bond shall then be fixed at 10 percent of this calculation, but

not more than $500,000. A bond for such amount shall be obtained in any form the plan desires on all persons who are administrators, officers, or employees of the plan and who ''handle'' funds or other property of the plan.

§ 2580.412–16 Amount of bond required in given types of bonds or where more than one plan is insured in the same bond.

(a) As indicated in § 2580.412–10, the Act permits the use of blanket, schedule and individual forms of bonds so long as the amount of the bond penalty is sufficient to meet the requirements of the Act for any person who is an administrator, officer or employee of a plan handling funds or other property of the plan. Such person must be bonded for 10 percent of the amount he handles, and the amount of the bond must be sufficient to indemnify the plan for any losses in which such person is involved up to that amount.

(b) When individual or schedule bonds are written, the bond amount for each person must represent not less than 10 percent of the funds ''handled'' by the named individual or by the person in the position. When a blanket bond is written, the amount of the bond shall be at least 10 percent of the highest amount handled by any administrator, officer or employee to be covered under the bond. It should also be noted that if an individual or group or class covered under a blanket bond ''handle'' a large amount of funds or other property, while the remaining bondable persons ''handle'' only a smaller amount, it is permissible to obtain a blanket bond in an amount sufficient to meet the 10 percent requirements for all except the individual, group or class ''handling'' the larger amounts, with respect to whom excess indemnity shall be secured in an amount sufficient to meet the 10 percent requirement.

(c) The Act does not prohibit more than one plan from being named as insured under the same bond. However, any such bond must allow for recovery by each plan in an amount at least equal to that which would be required if bonded separately. This requirement has application where a person or persons sought to be bonded pursuant to the requirements of section 13 have ''handling'' functions in more than one plan covered under the bond. Where such is the case, the amount of the bond must be sufficient to cover any such persons having functions in more than one plan for at least 10 percent of the total amount ''handled'' by them in all the plans covered under the bond. For example, X is the administrator of two welfare plans run by the same employer and he ''handled'' $100,000 in the preceding reporting year for Plan A and $500,000 in the preceding reporting year for Plan B. If both plans are covered under the same bond, the amount of the bond with respect to X shall be at least $60,000 or ten percent of the total ''handled'' by X for both plans covered under the bond in which X has powers and duties of ''handling'' since Plan B is required to carry bond in at least the amount of $50,000 and Plan A, $10,000.

(d) Additionally, in order to meet the requirement that each plan be protected, it shall be necessary that arrangement be made either by the terms of the bond or rider to the bond or by separate agreement among the parties concerned, that payment of a loss sustained by one of such insureds shall not work to the detriment of any other plan covered under the bond with respect to the amount for which that plan is required to be covered. For example, if Plan A suffered a loss of $30,000 as described above and such loss was recompensed in its entirety by the surety company, it would receive $20,000 more than the $10,000 protection required under section 13, and only $30,000 would be available for recovery with respect to further losses caused by X. In a subsequently discovered defalcation of $40,000 by X from Plan B, it would be necessary that the bond, rider, or separate agreement provide that such amount of recovery paid to Plan A in excess of the $10,000 for which it is required to be covered, be made available by such insured to, or held for the use of, Plan B in such amount as Plan B would receive if bonded separately. Thus, in the instant case, Plan B would be able to recover the full $40,000 of its loss. Where the funds or other property of several plans are commingled (if permitted by law) with each other or with other funds,

such arrangement shall allow recovery to be attributed proportionately to the amount for which each plan is required to be protected. Thus, in the instant case, if funds or other property were commingled, and X caused a loss of these funds through fraud or dishonesty, one-sixth of the loss would be attributable to Plan A and five-sixths of the loss attributable to Plan B.

(e) The maximum amount of any bond with respect to any person in any one plan in $500,000, but bonds covering more than one plan may be required to be over $500,000 in order to meet the requirements of the Act, since persons covered by such a bond may have ''handling'' functions in more than one plan. The $500,000 limitations for such persons applies only with respect to each separate plan in which they have such functions. The minimum bond coverage for any administrator, officer, or employee ''handling'' funds or other property of a plan is $1,000 as respects each plan in which he has ''handling'' functions.

§ 2580.412–17 Bonds over $500,000.

The Labor-Management Services Administrator, after due notice and opportunity for hearing to all interested parties, and after consideration of the record, may prescribe an amount in excess of $500,000, which in no event shall exceed 10 per centum of the funds ''handled.'' Any requirement for bonding in excess of $500,000 shall be according to such other regulations as may be prescribed.

Subpart D—General Bond Rules

§ 2580.412–18 Naming of insureds.

Since section 13 is intended to protect funds or other property of all plans involved, bonds under this section shall allow for enforcement or recovery by those persons usually authorized to act for such plans in such matters. In most cases, the naming of the plan or plans as insured will provide for such recovery. Where it is not clear that such recovery will be provided, however, a rider shall be attached to the bond or separate agreement made among the parties concerned to make certain that any reimbursement collected under the bond will be for the benefit and use of the plan suffering a loss. Such rider or agreement shall always be required as respects any bond (a) where the employer or employee organization is first named joint insured with one or more plans, or (b) two or more plans are named joint insureds under a single bond with the first named acting for all insureds for the purpose of orderly servicing of the bond.

§ 2580.412–19 Term of the bond, discovery period, other bond clauses.

(a) *Term of the bond.* The amount of any required bond must in each instance be based on the amount of funds ''handled'' and must be fixed or estimated at the beginning of the plan's reporting year, that is, as soon after the date when such year begins as the necessary information from the preceding reporting year can practicably be ascertained. This does not mean, however, that a new bond must be obtained each year. There is nothing in the Act that prohibits a bond for a term longer than one year, with whatever advantages such a bond might offer by way of a lower premium. However, at the beginning of each reporting year the bond shall be in at least the requisite amount. If, for any reason, the bond is below the required level at that time, the existing bond shall either be increased to the proper amount, or a supplemental bond shall be obtained.

(b) *Discovery period.* A discovery period of no less than one year after the termination or cancellation of the bond is required. Any standard form written on a ''discovery'' basis, *i.e.*, providing that a loss must be discovered within the bond period as a prerequisite to recovery of such loss, however, will not be required to have a discovery period if it contains a provision giving the insured the right to purchase a discovery period of one year in the event of termination or cancellation and the insured has already given the surety notice that it desires such discovery period.

(c) *Other bond clauses.* A bond shall not be adequate to meet the requirements of section 13, if, with respect to

bonding coverage required under section 13, it contains a clause, or is otherwise, in contravention of the law of the State in which it is executed.

§ 2580.412–20 Use of existing bonds, separate bonds and additional bonding.

(a) *Additional bonding.* Section 13 neither prevents additional bonding beyond that required by its terms, nor prescribes the form in which additional coverage may be taken. Thus, so long as a particular bond meets the requirements of the regulations in this part as to the persons required to be bonded and provides coverage for such persons in at least the minimum required amount, additional coverage as to persons or amount may be taken in any form, either on the same or separate bond.

(b) *Use of existing bonds.* Insofar as a bond currently in use is adequate to meet the requirements of the Act and the regulations in this part or may be made adequate to meet these requirements through rider, modification or separate agreement between the parties, no further bonding is required.

(c) *Use of separate bonds.* The choice of whether persons required to be bonded should be bonded separately or under the same bond, whether given plans should be bonded separately or under the same bond, whether existing bonds should be used or separate bonds for Welfare and Pension Plans Disclosure Act bonding should be obtained, or whether the bond is underwritten by a single surety company or more than one surety company, either separately or on a cosurety basis, is left to the judgment of the parties concerned, so long as the bonding program adopted meets the requirements of the Act and the regulations in this part.

Subpart E—Qualified Agents, Brokers and Surety Companies for the Placing of Bonds

§ 2580.412–21 Corporate sureties holding grants of authority from the Secretary of the Treasury.

(a) The provisions of section 13 require that any surety company with which a bond is placed pursuant to that section must be a corporate surety which holds a grant of authority from the Secretary of the Treasury under the Act of July 30, 1947 (6 U.S.C. 6–13), as an acceptable surety on Federal bonds. The Act provides, among other things, that in order for a surety company to be eligible for such grant of authority, it must be incorporated under the laws of the United States or of any State and the Secretary of the Treasury shall be satisfied of certain facts relating to its authority and capitalization. Such grants of authority are evidenced by Certificates of Authority which are issued by the Secretary of the Treasury and which expire on the April 30 following the date of their issuance. A list of the companies holding such Certificates of Authority is published annually in the FEDERAL REGISTER, usually in May or June. Changes in the list, occurring between May 1 and April 30, either by addition to or removal from the list of companies, are also published in the FEDERAL REGISTER following each such change.

(b) Where a surety becomes insolvent and is placed in receivership, or if for any other reason the Secretary of the Treasury determines that its financial condition is not satisfactory to him and he revokes the authority of such company to act as an acceptable surety under the Act of July 30, 1947, the ''administrator'' of the insured plan shall, upon knowledge of such facts, be responsible for securing a new bond with an acceptable surety.

(c) In obtaining or renewing a bond, the plan administrator shall assure that the surety is one which satisfies the requirements of this section. If the bond is for a term of more than one year, the plan administrator, at the beginning of each reporting year, shall assure that the surety continues to satisfy the requirements of this subpart.

§ 2580.412–22 Interests held in agents, brokers and surety companies.

Section 13(c) prohibits the placing of bonds, required to be obtained pursuant to section 13, with any surety or other company, or through any agent or broker in whose business operations a plan or any party in interest in a

plan has significant control or financial interest, direct or indirect. An interpretation of this section has been issued (§ 2580.412–36 of this chapter).

Subpart F—Exemptions

SOURCE: 28 FR 14410, Dec. 27, 1963, unless otherwise noted. Redesignated at 50 FR 26706, June 28, 1985.

BONDS PLACED WITH CERTAIN REINSURING COMPANIES

§ 2580.412–23 Exemption.

An exemption from the bonding requirements of the Welfare and Pension Plans Disclosure Act is granted by this section whereby bonding arrangements (which otherwise comply with the requirements of section 13 of the Act and the regulations issued thereunder) with companies authorized by the Secretary of the Treasury as acceptable reinsurers on Federal bonds will satisfy the bonding requirements of the Act.

§ 2580.412–24 Conditions of exemption.

(a) This exemption obtains only with respect to the requirement of section 13(a) of the Act that all bonds required thereunder shall have as surety thereon, a corporate surety company, which is an acceptable surety on Federal bonds under authority granted by the Secretary of the Treasury pursuant to the Act of July 30, 1947 (6 U.S.C. 6–13).

(b) The exemption is granted upon the condition that if for any reason the authority of any such company to act as an acceptable reinsuring company is terminated, the administrator of a plan insured with such company, shall, upon knowledge of such fact, be responsible for securing a new bond with a company acceptable under the Act and the exemptions issued thereunder.

(c) In obtaining or renewing a bond, the plan administrator shall ascertain that the surety is one which satisfies the requirements of the Act and the exemptions thereunder. If the bond is for a term of more than one year, the plan administrator, at the beginning of each reporting year, shall ascertain that the surety continues to do so.

BONDS PLACED WITH UNDERWRITERS AT LLOYDS, LONDON

§ 2580.412–25 Exemption.

An exemption from the bonding requirements of subsection 13(a) of the Welfare and Pension Plans Disclosure Act is granted by this section whereby arrangements (which otherwise comply with the requirements of section 13 of the Act and the regulations issued thereunder), with the Underwriters at Lloyds, London will satisfy the bonding requirements of the Act.

§ 2580.412–26 Conditions of exemption.

(a) This exemption obtains only with respect to the requirements of section 13(a) of the Act that all bonds required thereunder shall have as surety thereon, a corporate surety company, which is an acceptable surety on Federal bonds under authority granted by the Secretary of the Treasury, pursuant to the Act of July 30, 1947 (6 U.S.C. 6–13).

(b) This exemption is granted on the following conditions:

(1) Underwriters at Lloyds, London shall continue to be licensed in a state of the United States to enter into bonding arrangements of the type required by the Act.

(2) Underwriters at Lloyds, London, shall file with the Office of Pension and Welfare Benefit Programs two (2) copies of each annual statement required to be made to the Commissioner of Insurance of those states in which Underwriters at Lloyds, London are licensed. Copies of annual statements shall be filed with the Office of Pension and Welfare Benefit Programs within the same period required by the respective states.

(3) All bonding arrangements entered into by Underwriters at Lloyds, London under section 13 of the Act shall contain a ''Service of Suit Clause'' in substantial conformity with that set forth in the petition for exemption.

BANKING INSTITUTIONS SUBJECT TO FEDERAL REGULATION

§ 2580.412–27 Exemption.

An exemption from the bonding requirements of subsections 13 (a) and (b)

of the Welfare and Pension Plans Disclosure Act is granted whereby banking institutions and trust companies specified in § 2580.412–28 are not required to comply with subsections 13 (a) and (b) of the Act, with respect to welfare and pension benefit plans covered by the Act.

[34 FR 5158, Mar. 13, 1969. Redesignated at 50 FR 26706, June 28, 1985]

§ 2580.412–28 Conditions of exemption.

This exemption applies only to those banking institutions and trust companies subject to regulation and examination by the Comptroller of the Currency or the Board of Governors of the Federal Reserve System, or the Federal Deposit Insurance Corporation.

SAVINGS AND LOAN ASSOCIATIONS SUBJECT TO FEDERAL REGULATION

§ 2580.412–29 Exemption.

An exemption from the bonding requirements of subsections 13 (a) and (b) of the Welfare and Pension Plans Disclosure Act is granted whereby savings and loan associations (including building and loan associations, cooperative banks and homestead associations) specified in § 2580.412–30 are not required to comply with subsections 13 (a) and (b) of the Act, with respect to welfare and pension benefit plans covered by the Act for the benefit of their own employees, where such a savings and loan association is the administrator of such plans.

[32 FR 6840, May 4, 1967. Redesignated at 50 FR 26706, June 28, 1985]

§ 2580.412–30 Conditions of exemption.

This exemption applies only to those savings and loan associations (including building and loan associations, cooperative banks and homestead associations) subject to regulation and examination by the Federal Home Loan Bank Board.

[32 FR 6840, May 4, 1967. Redesignated at 50 FR 26706, June 28, 1985]

INSURANCE CARRIERS, SERVICE AND OTHER SIMILAR ORGANIZATIONS

§ 2580.412–31 Exemption.

An exemption from the bonding requirements of subsection 13 (a) and (b) of the Welfare and Pension Plans Disclosure Act is granted whereby any insurance carrier or service or other similar organization specified in § 2580.412–32 is not required to comply with subsections 13 (a) and (b) of the Act with respect to any welfare or pension benefit plan covered by the Act which is established or maintained for the benefit of persons other than the employees of such insurance carrier or service or other similar organization.

[34 FR 5158, Mar. 13, 1969. Redesignated at 50 FR 26706, June 28, 1985]

§ 2580.412–32 Conditions of exemption.

This exemption applies only to those insurance carriers, service or other similar organizations providing or underwriting welfare or pension plan benefits in accordance with State law.

[34 FR 5158, Mar. 13, 1969. Redesignated at 50 FR 26706, June 28, 1985]

Subpart G—Prohibition Against Bonding by Parties Interested in the Plan

SOURCE: 28 FR 14412, Dec. 27, 1963, unless otherwise noted. Redesignated at 50 FR 26706, June 28, 1985.

§ 2580.412–33 Introductory statement.

(a) This part discusses the meaning and scope of section 13(c) of the Welfare and Pension Plans Disclosure Act of 1958 (76 Stat. 39, 29 U.S.C. 308d(c)) (hereinafter referred to as the Act). This provision makes it unlawful ''for any person to procure any bond [required by the Act] from any surety or other company or through any agent or broker in whose business operations such plan or any party in interest in such plan has any significant control or financial interest, direct or indirect.'' Because the prohibition contained in this provision is broadly stated, it becomes a matter of importance to determine more specifically the types of arrangements intended to be prohibited.

(b) The provisions of section 13 of the Act, including 13(c) are subject to the general investigatory authority of the Director, Office of Labor-Management and Welfare-Pension Reports, embodied in section 9 of the Act. The correctness of an interpretation of these provisions can be determined finally and authoritatively only by the courts. It is necessary, however, for the Labor-Management Services Administrator to reach informed conclusions as to the meaning of the law to enable him to carry out his statutory duties of administration and enforcement. The interpretations of the Labor-Management Services Administrator contained in this part, which are issued upon the advice of the Solicitor of Labor, indicate the construction of the law which will guide the Labor-Management Services Administrator in performing his duties unless and until he is directed otherwise by authoritative ruling of the courts or unless and until he subsequently decides that his prior interpretation is incorrect. Under section 12 of the Act, the interpretations contained in this part, if relied upon in good faith, will constitute a defense in any action or proceeding based on any Act or omission in alleged violation of section 13(c) of the Act. The omission, however to discuss a particular problem in this part, or in interpretations supplementing it, should not be taken to indicate the adoption of any position by the Labor-Management Services Administrator with respect to such problem or to constitute an administrative interpretation or practice. Interpretations of the Labor-Management Services Administrator with respect to 13(c) are set forth in this part to provide those affected by the provisions of the Act with ''a practical guide * * * as to how the office representing the public interest in its enforcement will seek to apply it'' (*Skidmore* v. *Swift & Co.*, 323 U.S. 134, 138).

(c) To the extent that prior opinions and interpretations relating to 13(c) are inconsistent with the principles stated in this part, they are hereby rescinded and withdrawn.

§ 2580.412–34 General.

The purpose of section 13(c), as shown by its legislative history, is similar to a closely related provision contained in section 502(a) of the Labor-Management Reporting and Disclosure Act of 1959 (73 Stat. 536; 29 U.S.C. 502(a)). The fundamental purpose of Congress under 13(c) is to insure against potential abuses arising from significant financial or other influential interests affecting the objectivity of the plan or parties in interest in the plan and agents, brokers, or surety or other companies, in securing and providing the bond specified in section 13(a). As will be explained more fully below, this prohibition, however, was not intended to preclude the placing of bonds through or with certain parties in interest in plans which provide a variety of services to the plan, one of which is a bonding service.

§ 2580.412–35 Disqualification of agents, brokers and sureties.

Since 13(c) is to be construed as disqualifying any agent, broker, surety or other company from having a bond placed through or with it, if the plan or any party in interest in the plan has a significant financial interest or control in such agent, broker, surety or other company, a question of fact will necessarily arise in many cases as to whether the financial interest or control held is sufficiently significant to disqualify the agent, broker or surety. Although no rule of guidance can be established to govern each and every case in which this question arises, in general, the essential test is whether the existing financial interest or control held is incompatible with an unbiased exercise of judgment in regard to procuring the bond or bonding the plan's personnel. In regard to the foregoing, it is also to be pointed out that lack of knowledge or consent on the part of persons responsible for procuring bonds with respect to the existence of a significant financial interest or control rendering the bonding arrangement unlawful will not be deemed a mitigating factor where such persons have failed to make a reasonable examination into the pertinent circumstances affecting the procuring of the bond.

§ 2580.412–36 Application of 13(c) to "party in interest".

(a) Under 13(c), an agent, broker or surety or other company is disqualified from having a bond placed through or with it if a ''party in interest'' in the plan has any significant control or financial interest in such agent, broker, surety or other company. Section 3(13) of the Act defines the term ''party in interest'' to mean ''any administrator, officer, trustee, custodian, counsel, or employee of any employee welfare benefit plan or a person providing benefit plan services to any such plan, or an employer any of whose employees are covered by such a plan or officer or employee or agent of such employer, or an officer or agent or employee of an employee organization having members covered by such plan.''

(b) A basic question presented is whether the effect of 13(c) is to prohibit persons from placing a bond through or with any ''party in interest'' in the plan. The language used in 13(c) appears to indicate that in this connection the intent of Congress was to eliminate those instances where the existing financial interest or control held by the ''party in interest'' in the agent, broker, surety or other company is incompatible with an unbiased exercise of judgment in regard to procuring the bond or bonding the plan's personnel. Accordingly, not all parties in interest are disqualified from procuring or providing bonds for the plan. Thus where a ''party in interest'' or its affiliate provides multiple benefit plan services to plans, persons are not prohibited from availing themselves of the bonding services provided by the ''party in interest'' or its affiliate merely because the plan has already availed itself, or will avail itself, of other services provided by the ''party in interest.'' In this case, it is inherent in the nature of the ''party in interest'' or its affiliate as an individual or organization providing multiple benefit plan services, one of which is a bonding service, that the existing financial interest or control held is not, in and of itself, incompatible with an unbiased exercise of judgment in regard to procuring the bond or bonding the plan's personnel. In short, there is no distinction between this type of relationship and the ordinary arm's length business relationship which may be established between a plan-customer and an agent, broker or surety company, a relationship which Congress could not have intended to disturb. On the other hand, where a ''party in interest'' in the plan or an affiliate does not provide a bonding service as part of its general business operations, 13(c) would prohibit any person from procuring the bond through or with any agent, broker, surety or other company, with respect to which the ''party in interest'' has any significant control or financial interest, direct or indirect. In this case, the failure of the ''party in interest'' or its affiliate to provide a bonding service as part of its general business operations raises the posibility of less than an arm's length business relationship between the plan and the agent, broker, surety or other company since the objectivity of either the plan or the agent, broker or surety may be influenced by the ''party in interest''.

(c) The application of the principles discussed in this section is illustrated by the following examples:

Example 1. B, a broker, renders actuarial and consultant service to plan P. B has also procured a group life insurance policy for plan P. B may also place a bond for P with surety company S, provided that neither B nor P has any significant control or financial interest, direct or indirect, in S and provided that neither P nor any other ''party in interest'' in P, e.g., an officer of the plan, has any significant control or financial interest, direct or indirect, in B or S.

Example 2. I, a life insurance company, has provided a group life insurance policy for plan P. I is affiliated with S, a surety company, and has a significant financial interest or control in S. P is not prohibited from obtaining a bond from S since I's affiliation with S does not ordinarily, in and of itself, affect the objectivity of P in procuring the bond or the objectivity of S in bonding P's personnel. However, if any other ''party in interest'' as defined in section 3(13) of the Act, such as the employer whose employees are covered by P, should have a significant financial interest or control in S, S could not write the bond for P, since the employer's interest affects the objectivity of P and S.

SUBCHAPTER J—FIDUCIARY RESPONSIBILITY UNDER THE FEDERAL EMPLOYEES' RETIREMENT SYSTEM ACT OF 1986

PART 2582—RULES AND REGULATIONS FOR FIDUCIARY RESPONSIBILITY

Subpart A—Temporary Bonding Rules

Sec.
2582.8478–1 Temporary bonding requirements.
2582.8478–2 Amount of the bond.

Subpart B—Permanent Bonding Rules

2582.8478–3 Permanent bonding requirements.
2582.8478–4 Permanent amount of the bond.

AUTHORITY: 5 U.S.C. 8478 and 8478 note; Secretary of Labor's Order 1–2003, 68 FR 5374 (Feb. 3, 2003).

Subpart A—Temporary Bonding Rules

§ 2582.8478–1 Temporary bonding requirements.

(a) *General*. Pending the issuance of permanent regulations under section 8478 of the Federal Employees' Retirement System Act of 1986 (FERSA), any fiduciary with respect to the Thrift Savings Fund (Fund) established under FERSA or any person who handles funds or other property of the Fund, shall be deemed to be in compliance with the bonding requirements of section 8478 of FERSA if he or she is bonded in compliance with the temporary bonding regulations under section 412 of the Employee Retirement Income Security Act of 1974 (ERISA) set forth in part 2580 of title 29 of the Code of Federal Regulations.

(b) *Application of ERISA temporary bonding rules*. For purposes of this section:

(1) Any reference to section 13 of the Welfare and Pension Plans Disclosure Act, as amended (WPPDA), or any section thereof in the ERISA temporary bonding regulations shall be deemed to refer to section 8478 of FERSA or the corresponding subsection thereof;

(2) Where the particular phrases set forth in FERSA are not identical to the phrases in the WPPDA, ERISA or the ERISA temporary bonding regulations, the phrases appearing in FERSA shall be substituted by operation of law; and

(3) Where the phrases are identical but the meaning is different, the meaning given such phrases by FERSA shall govern. For example, the phrase ''every administrator, officer and employee of any employee welfare benefit plan or of any employee pension benefit plan subject to this Act who handles funds or other property of such plan'' which appears in the WPPDA and in the ERISA temporary bonding regulations shall be construed to mean, for purposes of this section, ''each fiduciary and each person who handles funds or property of the Thrift Savings Fund,'' which is the term appearing in section 8478 of FERSA; the terms ''employee benefit plan'' and ''plan'' which appear in the ERISA temporary bonding regulations shall be construed to mean, for purposes of this section, ''Thrift Savings Fund''; and the term ''reporting year of the plan'' which appears in the ERISA temporary bonding regulations shall be construed to mean, for purposes of this section, ''fiscal year of the Thrift Savings Fund.''

(c) *Effectiveness*. This section is effective until the earlier of the date of issuance by the Secretary of Labor of permanent regulations under section 8478 of FERSA or December 31, 1989.

[52 FR 35866, Sept. 23, 1987]

§ 2582.8478–2 Amount of the bond.

(a) *General*. Under the authority of section 8478(b)(1) of the Federal Employees' Retirement System Act of 1986 (FERSA), the amount of a bond for each person, group or class to be bonded shall not be less than 10 percent of the amount of funds handled by such person, group or class with respect to any fiscal year of the Fund. In no case shall such bond be less than $1,000 nor more than $500,000. However, the Secretary of Labor reserves the authority under section 8478(b)(1) of FERSA to prescribe an amount in excess of

$500,000, after due notice and opportunity for hearing to all interested parties, and other consideration of the record.

(b) *Effectiveness*. This section shall remain in effect until it is amended or withdrawn in accordance with section 8478(b)(1) of FERSA, but in no event shall this section remain in effect beyond December 31, 1989.

[52 FR 35866, Sept. 23, 1987, as amended at 54 FR 53609, Dec. 29, 1989]

Subpart B—Permanent Bonding Rules

§ 2582.8478–3 Permanent bonding requirements.

(a) *General*. Any fiduciary with respect to the Thrift Savings Fund (Fund) established under the Federal Employees' Retirement System Act of 1986 (FERSA) or any person who handles funds or other property of the Fund shall be deemed to be in compliance with the bonding requirements of section 8478 of FERSA if he or she is bonded in compliance with the temporary bonding regulations under section 412 of the Employee Retirement Income Security Act of 1974 (ERISA) set forth in part 2580 of title 29 of the Code of Federal Regulations.

(b) *Application of ERISA temporary bonding rules*. For purposes of this section:

(1) Any reference to section 13 of the Welfare and Pension Plans Disclosure Act, as amended (WPPDA), or any section thereof in the ERISA temporary bonding regulations shall be deemed to refer to section 8478 of FERSA or the corresponding subsection thereof;

(2) Where the particular phrases set forth in FERSA are not identical to the phrases in the WPPDA, ERISA or the ERISA temporary bonding regulations, the phrases appearing in FERSA shall be substituted by operation of law; and

(3) Where the phrases are identical but the meaning is different, the meaning given such phrases by FERSA shall govern. For example, the phrase ''every administrator, officer and employee of any employee welfare benefit plan or of any employee pension benefit plan subject to this Act who handles funds or other property of such plan'' which appears in the WPPDA and in the ERISA temporary bonding regulations shall be construed to mean, for purposes of this section ''each fiduciary and each person who handles funds or other property of the Thrift Savings Fund,'' which is the term appearing in section 8478 of FERSA; the terms ''employee benefit plan'' and ''plan'' which appear in the ERISA temporary bonding regulations shall be construed to mean, for purposes of this section, ''Thrift Savings Fund''; and the term ''reporting year of the plan'' which appears in the ERISA temporary bonding regulations shall be construed to mean, for purposes of this section, ''fiscal year of the Thrift Savings Fund.''

(c) *Effective date*. This section is effective January 1, 1990.

[54 FR 53609, Dec. 29, 1989]

§ 2582.8478–4 Permanent amount of the bond.

(a) *General*. Under the authority of section 8478(b)(1) of the Federal Employees' Retirement System Act of 1986 (FERSA), the amount of a bond for each person, group or class to be bonded shall not be less than 10 percent of the amount of funds handled by such person, group or class with respect to any fiscal year of the Fund. In no case shall such bond be less than $1,000 nor more than $500,000. However, the Secretary of Labor reserves the authority under section 8478(b)(1) of FERSA to prescribe an amount in excess of $500,000, after due notice and opportunity for hearing to all interested parties, and other consideration of the record.

(b) *Effective date*. This section shall become effective January 1, 1990, and remain in effect until it is amended or withdrawn in accordance with section 8478(b)(1) of FERSA.

[54 FR 53609, Dec. 29, 1989]

PART 2584—RULES AND REGULATIONS FOR THE ALLOCATION OF FIDUCIARY RESPONSIBILITY

Sec.

2584.8477(e)–1 General.
2584.8477(e)–2 Allocation of fiduciary duties.
2584.8477(e)–3 Procedures for allocation.

2584.8477(e)–4 Revocation and termination of allocation.
2584.8477(e)–5 Effect of allocation.
2584.8477(e)–6 Definitions.
2584.8477(e)–7 Effective date.

AUTHORITY: 5 U.S.C. 8477(e)(1)(E) and Secretary of Labor's Order 1–2003, 68 FR 5374 (Feb. 3, 2003).

SOURCE: 53 FR 52687, Dec. 29, 1988, unless otherwise noted.

§ 2584.8477(e)–1 General.

5 U.S.C. 8477(e)(1)(E) provides that any fiduciary with respect to the Thrift Savings Fund of the Federal Employees Retirement System who allocates a fiduciary responsibility to another person pursuant to procedures prescribed by the Secretary of Labor shall not be liable for an act or omission of such person except in specified circumstances. This part sets forth the procedures which have been prescribed by the Secretary of Labor for the allocation of fiduciary responsibilities.

§ 2584.8477(e)–2 Allocation of fiduciary duties.

(a) The fiduciary duties of the Board as set forth at 5 U.S.C. 8472 may not be allocated to any person other than a member or members of the Board.

(b) The Executive Director may allocate authority and responsibility for the investment and management of the Fixed Income Investment Fund to a qualified professional asset manager(s).

(c) The Executive Director may allocate authority and responsibility for the investment and management of the Government Securities Investment Fund, the Common Stock Index Investment Fund, the International Stock Index Investment Fund and the Small Capitalization Stock Index Investment Fund to an investment manager(s).

(d) Notwithstanding any other provision of this part, no allocation may be made which would constitute:

(1) A violation of an express policy of the Board; or

(2) An invalid delegation according to the Act or any other law.

(e) Except as provided in this part, no person who has or may acquire fiduciary responsibility in connection with the Thrift Savings Fund may allocate such responsibility to another person.

[53 FR 52687, Dec. 29, 1988, as amended at 65 FR 34394, May 30, 2000]

§ 2584.8477(e)–3 Procedures for allocation.

(a) Any allocation made by the Board must—

(1) Be authorized by the concurring vote of a majority of the total membership of the Board;

(2) Be made in writing, signed by the Chairman of the Board and acknowledged in writing by the receiving Board member or members;

(3) Set forth the duties and responsibilities allocated, either in the body of the document or by reference to another document existing at the time of the allocation; and

(4) Be communicated in an appropriate written form to the Executive Director, the participants and the beneficiaries of the Thrift Savings Fund.

(b) Any allocation made by the Executive Director must—

(1) Be made in writing, signed by the Executive Director and acknowledged in writing by the receiving fiduciary;

(2) Set forth the duties and responsibilities allocated, either in the body of the document or by reference to another document existing at the time of the allocation; and

(3) Be communicated in an appropriate written form to the participants and beneficiaries of the Thrift Savings Fund.

§ 2584.8477(e)–4 Revocation and termination of allocation.

(a) Any allocation made pursuant to this part must be revocable at will by the allocating fiduciary, subject only to notice which is reasonable under the circumstances.

(b) Any revocation by the allocating fiduciary or termination of an allocation by the fiduciary to whom duties have been allocated must set forth in writing the duties and responsibilities as to which the revocation or termination is effective, either in the body of the document or by reference to another document existing at the time of the revocation or termination.

(c) Any revocation of an allocation must—

(1) In the case of an allocation which was made by the Board, be authorized by the concurring vote of a majority of the total membership of the Board and be signed by the Chairman of the Board, or

(2) In the case of an allocation which was made by the Executive Director, be signed by the Executive Director.

(d) Any termination of an allocation, to be effective, must—

(1) In the case of an allocation which was made by the Board, be signed by the terminating fiduciary and acknowledged in writing by the Chairman of the Board, or

(2) In the case of an allocation which was made by the Executive Director, be signed by the terminating fiduciary and acknowledged in writing by the Executive Director.

(e) Any revocation or termination of an allocation must be communicated by the Executive Director in an appropriate written form to the participants and beneficiaries of the Thrift Savings Fund in a manner which identifies the person(s) assuming the responsibilities which were the subject of the revocation or termination.

§ 2584.8477(e)–5 Effect of allocation.

Where fiduciary responsibility has been allocated to another person or persons pursuant to the procedures contained in this part, the allocating fiduciary shall not be liable for any act or omission of such person or persons unless:

(a) The allocating fiduciary has violated 5 U.S.C. 8477(b) with respect to—

(1) The allocation or the continuation of the allocation,

(2) The implementation of these procedures, or

(3) The duty to monitor the performance of such person or persons in a reasonable manner during the life of the allocation, or

(b) The allocating fiduciary would otherwise be liable in accordance with 5 U.S.C. 8477(e)(1)(D).

§ 2584.8477(e)–6 Definitions.

As used in this part:

(a) *Act* means the Federal Employees' Retirement System Act of 1986, 5 U.S.C. 8401 *et seq.* (Supp. III 1997);

(b) *Board* means the Federal Retirement Thrift Investment Board established pursuant to 5 U.S.C. 8472;

(c) *Common Stock Index Investment Fund* means the fund established under 5 U.S.C. 8438(b)(1)(C);

(d) *Executive Director* means the executive director of the Federal Retirement Thrift Investment Board as appointed pursuant to 5 U.S.C. 8474;

(e) *Fiduciary duty* and *fiduciary responsibility* mean any duty or responsibility which involves the exercise of discretionary authority or discretionary control over—

(1) The management or disposition of the assets of the Thrift Savings Fund, or

(2) The administration of the Thrift Savings Fund;

(f) *Fixed Income Investment Fund* means the fund established under 5 U.S.C. 8438(b)(1)(B);

(g) *Government Securities Investment Fund* means the fund established under 5 U.S.C. 8438(b)(1)(A);

(h) *International Stock Index Investment Fund* means the fund established under 5 U.S.C. 8438(b)(1)(E);

(i) *Investment manager* means any fiduciary who—

(1) Has the power to manage, acquire or dispose of any asset of the plan,

(2) Is:

(i) Registered as an investment adviser under the Investment Advisers Act of 1940 (15 U.S.C. 80b–1),

(ii) Not registered as an investment adviser under such Act by reason of paragraph (1) of section 203A(a) of such Act (15 U.S.C. 80b–3a) but is registered as an investment adviser under the laws of the state (referred to in such paragraph (1)) in which it maintains its principal office and place of business, and, at the time the fiduciary last filed the registration form most recently filed by the fiduciary with such state in order to maintain the fiduciary's registration under the laws of such state, also filed a copy of such form with the Secretary of Labor,

(iii) A bank, as defined in that Act, or

(iv) An insurance company qualified to perform services described in paragraph (i)(1) of this section under the laws of more than one state, and

(3) Has acknowledged in writing that he or she is a fiduciary with respect to the Thrift Savings Fund;

(j) *Qualified professional asset manager* has the meaning which is prescribed at 5 U.S.C. 8438(a)(7);

(k) *Small Capitalization Stock Index Investment Fund* means the fund established under 5 U.S.C. 8438(b)(1)(D);

(l) *Thrift Savings Fund* means the fund established under 5 U.S.C. 8437.

[53 FR 52687, Dec. 29, 1988, as amended at 65 FR 34394, May 30, 2000]

§ 2584.8477(e)–7 Effective date.

This section is effective December 29, 1988, and liability for any transaction which occurs on or after this date will be governed by this section only. In accordance with section 114(a) of Pub. L. 99–556, the interim regulations promulgated by the Board appearing at title 5, CFR, chapter VI, §§ 1660.1 through 1660.5 will no longer be effective as of December 29, 1988. Liability for transactions which occur before the effective date of this regulation, however, will continue to be governed by allocations made both during the statutorily defined effective period of the previously cited interim regulations and pursuant to the requirements of those regulations.

SUBCHAPTER K—ADMINISTRATION AND ENFORCEMENT UNDER THE FEDERAL EMPLOYEES' RETIREMENT SYSTEM ACT OF 1986

PART 2589—RULES AND REGULATIONS FOR ADMINISTRATION AND ENFORCEMENT

AUTHORITY: 5 U.S.C. 8477(e)(1)(B) and (f); Secretary of Labor's Order 1–2003, 68 FR 5374 (Feb. 3, 2003).

SOURCE: 54 FR 32636, Aug. 9, 1989, unless otherwise noted.

§ 2589.1 Civil penalties under section 8477(e)(1)(B) of FERSA.

(a) Section 8477(e)(1)(B) of FERSA, 5 U.S.C. 8477(e)(1)(B), permits the Secretary of Labor to assess a civil penalty against a party in interest who engages in a prohibited transaction with respect to the Thrift Savings Fund. The initial penalty under section 8477(e)(1)(B) is five percent of the ''amount involved'' in each such transaction for each year or part thereof during which the prohibited transaction continues. However, if the prohibited transaction is not corrected during the ''correction period,'' the civil penalty may be in an amount not more than 100% of the ''amount involved.'' The Department of Labor will apply the definitions set out in § 2560.502i–1(b) through (e) of this chapter of title 29 (civil penalties under section 502(i) of ERISA) in determining the ''amount involved,'' ''correction,'' ''correction period,'' and for computation of the section 8477(e)(1)(B) penalty.

(b) The rules of practice set forth in §§ 2570.1–2570.12 of part 2570, subpart A of subchapter G of this chapter of title 29 (procedures for the assessment of civil sanctions under ERISA section 502(i)) are applicable to prohibited transaction penalty proceedings under FERSA section 8477(e)(1)(B).

SUBCHAPTER L—GROUP HEALTH PLANS

PART 2590—RULES AND REGULATIONS FOR GROUP HEALTH PLANS

Subpart A—Continuation Coverage, Qualified Medical Child Support Orders, Coverage for Adopted Children

Sec.
2590.606–1 General notice of continuation coverage.
2590.606–2 Notice requirement for employers.
2590.606–3 Notice requirements for covered employees and qualified beneficiaries.
2590.606–4 Notice requirements for plan administrators.
2590.609–1 [Reserved]
2590.609–2 National Medical Support Notice.

Subpart B—Health Coverage Portability, Nondiscrimination, and Renewability

2590.701–1 Basis and scope.
2590.701–2 Definitions.
2590.701–3 Preexisting condition exclusions.
2590.701–4 Rules relating to creditable coverage.
2590.701–5 Evidence of creditable coverage.
2590.701–6 Special enrollment periods.
2590.701–7 HMO affiliation period as an alternative to a preexisting condition exclusion.
2590.701–8 Interaction with the Family and Medical Leave Act. [Reserved]
2590.702 Prohibiting discrimination against participants and beneficiaries based on a health factor.
2590.702–1 Additional requirements prohibiting discrimination based on genetic information.
2590.703 Guaranteed renewability in multiemployer plans and multiple employer welfare arrangements. [Reserved]

Subpart C—Other Requirements

2590.711 Standards relating to benefits for mothers and newborns.
2590.712 Parity in mental health and substance use disorder benefits.
2590.715–1251 Preservation of right to maintain existing coverage.
2590.715–2704 Prohibition of preexisting condition exclusions.
2590.715–2705 Prohibiting discrimination against participants and beneficiaries based on a health factor.
2590.715–2708 Prohibition on waiting periods that exceed 90 days.
2590.715–2711 No lifetime or annual limits.
2590.715–2712 Rules regarding rescissions.
2590.715–2713 Coverage of preventive health services.
2590.715–2713A Accommodations in connection with coverage of preventive health services.
2590.715–2714 Eligibility of children until at least age 26.
2590.715–2715 Summary of benefits and coverage and uniform glossary.
2590.715–2719 Internal claims and appeals and external review processes.
2590.715–2719A Patient protections.

Subpart D—General Provisions Related to Subparts B and C

2590.731 Preemption; State flexibility; construction.
2590.732 Special rules relating to group health plans.
2590.734 Enforcement. [Reserved]
2590.736 Applicability dates.

AUTHORITY: 29 U.S.C. 1027, 1059, 1135, 1161–1168, 1169, 1181–1183, 1181 note, 1185, 1185a, 1185b, 1191, 1191a, 1191b, and 1191c; sec. 101(g), Public Law 104–191, 110 Stat. 1936; sec. 401(b), Public Law 105–200, 112 Stat. 645 (42 U.S.C. 651 note); sec. 512(d), Public Law 110–343, 122 Stat. 3765; Public Law 110–460, 122 Stat. 5123; Secretary of Labor's Order 1–2011, 77 FR 1088 (January 9, 2012).

SOURCE: 62 FR 16941, Apr. 8, 1997, unless otherwise noted.

Subpart A—Continuation Coverage, Qualified Medical Child Support Orders, Coverage for Adopted Children

§ 2590.606–1 General notice of continuation coverage.

(a) *General.* Pursuant to section 606(a)(1) of the Employee Retirement Income Security Act of 1974, as amended (the Act), the administrator of a group health plan subject to the continuation coverage requirements of part 6 of title I of the Act shall provide, in accordance with this section, written notice to each covered employee and spouse of the covered employee (if any) of the right to continuation coverage provided under the plan.

(b) *Timing of notice.* (1) The notice required by paragraph (a) of this section shall be furnished to each employee and each employee's spouse, not later than the earlier of:

(i) The date that is 90 days after the date on which such individual's coverage under the plan commences, or, if later, the date that is 90 days after the date on which the plan first becomes subject to the continuation coverage requirements; or

(ii) The first date on which the administrator is required, pursuant to § 2590.606–4(b), to furnish the covered employee, spouse, or dependent child of such employee notice of a qualified beneficiary's right to elect continuation coverage.

(2) A notice that is furnished in accordance with paragraph (b)(1) of this section shall, for purposes of section 606(a)(1) of the Act, be deemed to be provided at the time of commencement of coverage under the plan.

(3) In any case in which an administrator is required to furnish a notice to a covered employee or spouse pursuant to paragraph (b)(1)(ii) of this section, the furnishing of a notice to such individual in accordance with § 2590.606–4(b) shall be deemed to satisfy the requirements of this section.

(c) *Content of notice.* The notice required by paragraph (a) of this section shall be written in a manner calculated to be understood by the average plan participant and shall contain the following information:

(1) The name of the plan under which continuation coverage is available, and the name, address and telephone number of a party or parties from whom additional information about the plan and continuation coverage can be obtained;

(2) A general description of the continuation coverage under the plan, including identification of the classes of individuals who may become qualified beneficiaries, the types of qualifying events that may give rise to the right to continuation coverage, the obligation of the employer to notify the plan administrator of the occurrence of certain qualifying events, the maximum period for which continuation coverage may be available, when and under what circumstances continuation coverage may be extended beyond the applicable maximum period, and the plan's requirements applicable to the payment of premiums for continuation coverage;

(3) An explanation of the plan's requirements regarding the responsibility of a qualified beneficiary to notify the administrator of a qualifying event that is a divorce, legal separation, or a child's ceasing to be a dependent under the terms of the plan, and a description of the plan's procedures for providing such notice;

(4) An explanation of the plan's requirements regarding the responsibility of qualified beneficiaries who are receiving continuation coverage to provide notice to the administrator of a determination by the Social Security Administration, under title II or XVI of the Social Security Act (42 U.S.C. 401 *et seq.* or 1381 *et seq.*), that a qualified beneficiary is disabled, and a description of the plan's procedures for providing such notice;

(5) An explanation of the importance of keeping the administrator informed of the current addresses of all participants or beneficiaries under the plan who are or may become qualified beneficiaries; and

(6) A statement that the notice does not fully describe continuation coverage or other rights under the plan and that more complete information regarding such rights is available from the plan administrator and in the plan's SPD.

(d) *Single notice rule.* A plan administrator may satisfy the requirement to provide notice in accordance with this section to a covered employee and the covered employee's spouse by furnishing a single notice addressed to both the covered employee and the covered employee's spouse, if, on the basis of the most recent information available to the plan, the covered employee's spouse resides at the same location as the covered employee, and the spouse's coverage under the plan commences on or after the date on which the covered employee's coverage commences, but not later than the date on which the notice required by this section is required to be provided to the covered employee. Nothing in this section shall be construed to create a requirement to provide a separate notice to dependent children who share a residence with a covered employee or a

covered employee's spouse to whom notice is provided in accordance with this section.

(e) *Notice in summary plan description.* A plan administrator may satisfy the requirement to provide notice in accordance with this section by including the information described in paragraphs (c)(1), (2), (3), (4), and (5) of this section in a summary plan description meeting the requirements of § 2520.102–3 of this chapter furnished in accordance with paragraph (b) of this section.

(f) *Delivery of notice.* The notice required by this section shall be furnished in a manner consistent with the requirements of § 2520.104b–1 of this chapter, including paragraph (c) of that section relating to the use of electronic media.

(g) *Model notice.* The appendix to this section contains a model notice that is intended to assist administrators in discharging the notice obligations of this section. Use of the model notice is not mandatory. The model notice reflects the requirements of this section as they would apply to single-employer group health plans and must be modified if used to provide notice with respect to other types of group health plans, such as multiemployer plans or plans established and maintained by employee organizations for their members. In order to use the model notice, administrators must appropriately add relevant information where indicated in the model notice, select among alternative language, and supplement the model notice to reflect applicable plan provisions. Items of information that are not applicable to a particular plan may be deleted. Use of the model notice, appropriately modified and supplemented, will be deemed to satisfy the notice content requirements of paragraph (c) of this section.

(h) *Applicability.* This section shall apply to any notice obligation described in this section that arises on or after the first day of the first plan year beginning on or after November 26, 2004.

APPENDIX TO § 2590.606-1

MODEL GENERAL NOTICE OF COBRA CONTINUATION COVERAGE RIGHTS
(For use by single-employer group health plans)

**** CONTINUATION COVERAGE RIGHTS UNDER COBRA****

Introduction

You are receiving this notice because you have recently become covered under a group health plan (the Plan). This notice contains important information about your right to COBRA continuation coverage, which is a temporary extension of coverage under the Plan. **This notice generally explains COBRA continuation coverage, when it may become available to you and your family, and what you need to do to protect the right to receive it.**

The right to COBRA continuation coverage was created by a federal law, the Consolidated Omnibus Budget Reconciliation Act of 1985 (COBRA). COBRA continuation coverage can become available to you when you would otherwise lose your group health coverage. It can also become available to other members of your family who are covered under the Plan when they would otherwise lose their group health coverage. For additional information about your rights and obligations under the Plan and under federal law, you should review the Plan's Summary Plan Description or contact the Plan Administrator.

What is COBRA Continuation Coverage?

COBRA continuation coverage is a continuation of Plan coverage when coverage would otherwise end because of a life event known as a "qualifying event." Specific qualifying events are listed later in this notice. After a qualifying event, COBRA continuation coverage must be offered to each person who is a "qualified beneficiary." You, your spouse, and your dependent children could become qualified beneficiaries if coverage under the Plan is lost because of the qualifying event. Under the Plan, qualified beneficiaries who elect COBRA continuation coverage [*choose and enter appropriate information:* must pay *or* are not required to pay] for COBRA continuation coverage.

If you are an employee, you will become a qualified beneficiary if you lose your coverage under the Plan because either one of the following qualifying events happens:

- Your hours of employment are reduced, or
- Your employment ends for any reason other than your gross misconduct.

If you are the spouse of an employee, you will become a qualified beneficiary if you lose your coverage under the Plan because any of the following qualifying events happens:

- Your spouse dies;
- Your spouse's hours of employment are reduced;
- Your spouse's employment ends for any reason other than his or her gross misconduct;
- Your spouse becomes entitled to Medicare benefits (under Part A, Part B, or both); or
- You become divorced or legally separated from your spouse.

Your dependent children will become qualified beneficiaries if they lose coverage under the Plan because any of the following qualifying events happens:

- The parent-employee dies;
- The parent-employee's hours of employment are reduced;
- The parent-employee's employment ends for any reason other than his or her gross misconduct;
- The parent-employee becomes entitled to Medicare benefits (Part A, Part B, or both);
- The parents become divorced or legally separated; or
- The child stops being eligible for coverage under the plan as a "dependent child."

[*If the Plan provides retiree health coverage, add the following paragraph:*]

Sometimes, filing a proceeding in bankruptcy under title 11 of the United States Code can be a qualifying event. If a proceeding in bankruptcy is filed with respect to [*enter name of employer sponsoring the plan*], and that bankruptcy results in the loss of coverage of any retired employee covered under the Plan, the retired employee will become a qualified beneficiary with respect to the bankruptcy. The retired employee's spouse, surviving spouse, and dependent children will also become qualified beneficiaries if bankruptcy results in the loss of their coverage under the Plan.

When is COBRA Coverage Available?

The Plan will offer COBRA continuation coverage to qualified beneficiaries only after the Plan Administrator has been notified that a qualifying event has occurred. When the qualifying event is the end of employment or reduction of hours of employment, death of the employee, [*add if Plan provides retiree health coverage:* commencement of a proceeding in bankruptcy with respect to the employer,] or the employee's becoming entitled to Medicare benefits (under Part A, Part B, or both), the employer must notify the Plan Administrator of the qualifying event.

You Must Give Notice of Some Qualifying Events

For the other qualifying events (divorce or legal separation of the employee and spouse or a dependent child's losing eligibility for coverage as a dependent child), you must notify the Plan Administrator within 60 days [*or enter longer period permitted under the terms of the Plan*] after the qualifying event occurs. You must provide this notice to: [*Enter name of appropriate party*]. [*Add description of any additional Plan procedures for this notice, including a description of any required information or documentation.*]

How is COBRA Coverage Provided?

Once the Plan Administrator receives notice that a qualifying event has occurred, COBRA continuation coverage will be offered to each of the qualified beneficiaries. Each qualified beneficiary will have an independent right to elect COBRA continuation coverage. Covered employees may elect COBRA continuation coverage on behalf of their spouses, and parents may elect COBRA continuation coverage on behalf of their children.

COBRA continuation coverage is a temporary continuation of coverage. When the qualifying event is the death of the employee, the employee's becoming entitled to Medicare benefits (under Part A, Part B, or both), your divorce or legal separation, or a dependent child's losing eligibility as a dependent child, COBRA continuation coverage lasts for up to a total of 36 months. When the qualifying event is the end of employment or reduction of the employee's hours of employment, and the employee became entitled to Medicare benefits less than 18 months before the qualifying event, COBRA continuation coverage for qualified beneficiaries other than the employee lasts until 36 months after the date of Medicare entitlement. For example, if a covered employee becomes entitled to Medicare 8 months before the date on which his employment terminates, COBRA continuation coverage for his spouse and children can last up to 36 months after the date of Medicare entitlement, which is equal to 28 months after the date of the qualifying event (36 months minus 8 months). Otherwise, when the qualifying event is the end of employment or reduction of the employee's hours of employment, COBRA continuation coverage generally lasts for only up to a total of 18 months. There are two ways in which this 18-month period of COBRA continuation coverage can be extended.

Disability extension of 18-month period of continuation coverage

If you or anyone in your family covered under the Plan is determined by the Social Security Administration to be disabled and you notify the Plan Administrator in a timely fashion, you and your entire family may be entitled to receive up to an additional 11 months of COBRA continuation coverage, for a total maximum of 29 months. The disability would have to have started at some time before the 60th day of COBRA continuation coverage and must last at least until the end of the 18-month period of continuation coverage. [*Add description of any additional Plan procedures for this notice, including a description of any required information or documentation, the name of the appropriate party to whom notice must be sent, and the time period for giving notice*].

Second qualifying event extension of 18-month period of continuation coverage

If your family experiences another qualifying event while receiving 18 months of COBRA continuation coverage, the spouse and dependent children in your family can get up to 18 additional months of COBRA continuation coverage, for a maximum of 36 months, if notice of the second qualifying event is properly given to the Plan. This extension may be available to the spouse and any dependent children receiving continuation coverage if the employee or former employee dies, becomes entitled to Medicare benefits (under Part A, Part B, or both), or gets divorced or legally separated, or if the dependent child stops being eligible under the Plan as a dependent child, but only if the event would have caused the spouse or dependent child to lose coverage under the Plan had the first qualifying event not occurred.

If You Have Questions

Questions concerning your Plan or your COBRA continuation coverage rights should be addressed to the contact or contacts identified below. For more information about your rights under ERISA, including COBRA, the Health Insurance Portability and Accountability Act (HIPAA), and other laws affecting group health plans, contact the nearest Regional or District Office of the U.S. Department of Labor's Employee Benefits Security Administration (EBSA) in your area or visit the EBSA website at www.dol.gov/ebsa. (Addresses and phone numbers of Regional and District EBSA Offices are available through EBSA's website.)

Keep Your Plan Informed of Address Changes

In order to protect your family's rights, you should keep the Plan Administrator informed of any changes in the addresses of family members. You should also keep a copy, for your records, of any notices you send to the Plan Administrator.

Plan Contact Information

[Enter name of group health plan and name (or position), address and phone number of party or parties from whom information about the plan and COBRA continuation coverage can be obtained on request.]

[69 FR 30097, May 26, 2004; 69 FR 34921, June 23, 2004]

§ 2590.606–2 Notice requirement for employers.

(a) *General.* Pursuant to section 606(a)(2) of the Employee Retirement Income Security Act of 1974, as amended (the Act), except as otherwise provided herein, the employer of a covered employee under a group health plan subject to the continuation coverage requirements of part 6 of title I of the Act shall provide, in accordance with this section, notice to the administrator of the plan of the occurrence of a qualifying event that is the covered employee's death, termination of employment (other than by reason of gross misconduct), reduction in hours of employment, Medicare entitlement, or a proceeding in a case under title 11, United States Code, with respect to the employer from whose employment the covered employee retired at any time.

(b) *Timing of notice.* The notice required by this section shall be furnished to the administrator of the plan—

(1) In the case of a plan that provides, with respect to a qualifying event, pursuant to section 607(5) of the Act, that continuation coverage and the applicable period for providing notice under section 606(a)(2) of the Act shall commence on the date of loss of coverage, not later than 30 days after the date on which a qualified beneficiary loses coverage under the plan due to the qualifying event;

(2) In the case of a multiemployer plan that provides, pursuant to section 606(a)(2) of the Act, for a longer period of time within which employers may provide notice of a qualifying event, not later than the end of the period provided pursuant to the plan's terms for such notice; and

(3) In all other cases, not later than 30 days after the date on which the qualifying event occurred.

(c) *Content of notice.* The notice required by this section shall include sufficient information to enable the administrator to determine the plan, the covered employee, the qualifying event, and the date of the qualifying event.

(d) *Multiemployer plan special rules.* This section shall not apply to any employer that maintains a multiemployer plan, with respect to qualifying events affecting coverage under such plan, if the plan provides, pursuant to section 606(b) of the Act, that the administrator shall determine whether such a qualifying event has occurred.

(e) *Applicability.* This section shall apply to any notice obligation described in this section that arises on or after the first day of the first plan year beginning on or after November 26, 2004.

[69 FR 30097, May 26, 2004]

§ 2590.606–3 Notice requirements for covered employees and qualified beneficiaries.

(a) *General.* In accordance with the authority of sections 505 and 606(a)(3) of the Employee Retirement Income Security Act of 1974, as amended (the Act), this section sets forth requirements for group health plans subject to the continuation coverage requirements of part 6 of title I of the Act with respect to the responsibility of

covered employees and qualified beneficiaries to provide the following notices to administrators:

(1) Notice of the occurrence of a qualifying event that is a divorce or legal separation of a covered employee from his or her spouse;

(2) Notice of the occurrence of a qualifying event that is a beneficiary's ceasing to be covered under a plan as a dependent child of a participant;

(3) Notice of the occurrence of a second qualifying event after a qualified beneficiary has become entitled to continuation coverage with a maximum duration of 18 (or 29) months;

(4) Notice that a qualified beneficiary entitled to receive continuation coverage with a maximum duration of 18 months has been determined by the Social Security Administration, under title II or XVI of the Social Security Act (42 U.S.C. 401 *et seq.* or 1381 *et seq.*) (SSA), to be disabled at any time during the first 60 days of continuation coverage; and

(5) Notice that a qualified beneficiary, with respect to whom a notice described in paragraph (a)(4) of this section has been provided, has subsequently been determined by the Social Security Administration, under title II or XVI of the SSA to no longer be disabled.

(b) *Reasonable procedures.* (1) A plan subject to the continuation coverage requirements shall establish reasonable procedures for the furnishing of the notices described in paragraph (a) of this section.

(2) For purposes of this section, a plan's notice procedures shall be deemed reasonable only if such procedures:

(i) Are described in the plan's summary plan description required by § 2520.102–3 of this chapter;

(ii) Specify the individual or entity designated to receive such notices;

(iii) Specify the means by which notice may be given;

(iv) Describe the information concerning the qualifying event or determination of disability that the plan deems necessary in order to provide continuation coverage rights consistent with the requirements of the Act; and

(v) Comply with the requirements of paragraphs (c), (d), and (e) of this section.

(3) A plan's procedures will not fail to be reasonable, pursuant to this section, solely because the procedures require a covered employee or qualified beneficiary to utilize a specific form to provide notice to the administrator, provided that any such form is easily available, without cost, to covered employees and qualified beneficiaries.

(4) If a plan has not established reasonable procedures for providing a notice required by this section, such notice shall be deemed to have been provided when a written or oral communication identifying a specific event is made in a manner reasonably calculated to bring the information to the attention of any of the following:

(i) In the case of a single-employer plan, the person or organizational unit that customarily handles employee benefits matters of the employer;

(ii) In the case of a plan to which more than one unaffiliated employer contributes, or which is established or maintained by an employee organization, either the joint board, association, committee, or other similar group (or any member of any such group) administering the plan, or the person or organizational unit to which claims for benefits under the plan customarily are referred; or

(iii) In the case of a plan the benefits of which are provided or administered by an insurance company, insurance service, or other similar organization subject to regulation under the insurance laws of one or more States, the person or organizational unit that customarily handles claims for benefits under the plan or any officer of the insurance company, insurance service, or other similar organization.

(c) *Periods of time for providing notice.* A plan may establish a reasonable period of time for furnishing any of the notices described in paragraph (a) of this section, provided that any time limit imposed by the plan with respect to a particular notice may not be shorter than the time limit described in this paragraph (c) with respect to that notice.

(1) *Time limits for notices of qualifying events.* The period of time for furnishing a notice described in paragraph (a)(1), (2), or (3) of this section may not end before the date that is 60 days after the latest of:

(i) The date on which the relevant qualifying event occurs;

(ii) The date on which the qualified beneficiary loses (or would lose) coverage under the plan as a result of the qualifying event; or

(iii) The date on which the qualified beneficiary is informed, through the furnishing of the plan's summary plan description or the notice described in § 2590.606–1, of both the responsibility to provide the notice and the plan's procedures for providing such notice to the administrator.

(2) *Time limits for notice of disability determination.* (i) Subject to paragraph (c)(2)(ii) of this section, the period of time for furnishing the notice described in paragraph (a)(4) of this section may not end before the date that is 60 days after the latest of:

(A) The date of the disability determination by the Social Security Administration;

(B) The date on which a qualifying event occurs;

(C) The date on which the qualified beneficiary loses (or would lose) coverage under the plan as a result of the qualifying event; or

(D) The date on which the qualified beneficiary is informed, through the furnishing of the summary plan description or the notice described in § 2590.606–1, of both the responsibility to provide the notice and the plan's procedures for providing such notice to the administrator.

(ii) Notwithstanding paragraph (c)(2)(i) of this section, a plan may require the notice described in paragraph (a)(4) of this section to be furnished before the end of the first 18 months of continuation coverage.

(3) *Time limits for notice of change in disability status.* The period of time for furnishing the notice described in paragraph (a)(5) of this section may not end before the date that is 30 days after the later of:

(i) The date of the final determination by the Social Security Administration, under title II or XVI of the SSA, that the qualified beneficiary is no longer disabled; or

(ii) The date on which the qualified beneficiary is informed, through the furnishing of the plan's summary plan description or the notice described in § 2590.606–1, of both the responsibility to provide the notice and the plan's procedures for providing such notice to the administrator.

(d) *Required contents of notice.* (1) A plan may establish reasonable requirements for the content of any notice described in this section, provided that a plan may not deem a notice to have been provided untimely if such notice, although not containing all of the information required by the plan, is provided within the time limit established under the plan in conformity with paragraph (c) of this section, and the administrator is able to determine from such notice the plan, the covered employee and qualified beneficiary(ies), the qualifying event or disability, and the date on which the qualifying event (if any) occurred.

(2) An administrator may require a notice that does not contain all of the information required by the plan to be supplemented with the additional information necessary to meet the plan's reasonable content requirements for such notice in order for the notice to be deemed to have been provided in accordance with this section.

(e) *Who may provide notice.* With respect to each of the notice requirements of this section, any individual who is either the covered employee, a qualified beneficiary with respect to the qualifying event, or any representative acting on behalf of the covered employee or qualified beneficiary may provide the notice, and the provision of notice by one individual shall satisfy any responsibility to provide notice on behalf of all related qualified beneficiaries with respect to the qualifying event.

(f) *Plan provisions.* To the extent that a plan provides a covered employee or qualified beneficiary a period of time longer than that specified in this section to provide notice to the administrator, the terms of the plan shall govern the time frame for such notice.

(g) *Additional rights to continuation coverage.* Nothing in this section shall

be construed to preclude a plan from providing, in accordance with its terms, continuation coverage to a qualified beneficiary although a notice requirement of this section was not satisfied.

(h) *Applicability*. This section shall apply to any notice obligation described in this section that arises on or after the first day of the first plan year beginning on or after November 26, 2004.

[69 FR 30097, May 26, 2004]

§ 2590.606–4 Notice requirements for plan administrators.

(a) *General*. Pursuant to section 606(a)(4) of the Employee Retirement Income Security Act of 1974, as amended (the Act), the administrator of a group health plan subject to the continuation coverage requirements of Part 6 of title I of the Act shall provide, in accordance with this section, notice to each qualified beneficiary of the qualified beneficiary's rights to continuation coverage under the plan.

(b) *Notice of right to elect continuation coverage*. (1) Except as provided in paragraph (b) (2) or (3) of this section, upon receipt of a notice of qualifying event furnished in accordance with § 2590.606–2 or § 2590.606–3, the administrator shall furnish to each qualified beneficiary, not later than 14 days after receipt of the notice of qualifying event, a notice meeting the requirements of paragraph (b)(4) of this section.

(2) In the case of a plan with respect to which an employer of a covered employee is also the administrator of the plan, except as provided in paragraph (b)(3) of this section, if the employer is otherwise required to furnish a notice of a qualifying event to an administrator pursuant to § 2590.606–2, the administrator shall furnish to each qualified beneficiary a notice meeting the requirements of paragraph (b)(4) of this section not later than 44 days after:

(i) In the case of a plan that provides, with respect to the qualifying event, that continuation coverage and the applicable period for providing notice under section 606(a)(2) of the Act shall commence with the date of loss of coverage, the date on which a qualified beneficiary loses coverage under the plan due to the qualifying event; or

(ii) In all other cases, the date on which the qualifying event occurred.

(3) In the case of a plan that is a multiemployer plan, a notice meeting the requirements of paragraph (b)(4) of this section shall be furnished not later than the later of:

(i) The end of the time period provided in paragraph (b)(1) of this section; or

(ii) The end of the time period provided in the terms of the plan for such purpose.

(4) The notice required by this paragraph (b) shall be written in a manner calculated to be understood by the average plan participant and shall contain the following information:

(i) The name of the plan under which continuation coverage is available; and the name, address and telephone number of the party responsible under the plan for the administration of continuation coverage benefits;

(ii) Identification of the qualifying event;

(iii) Identification, by status or name, of the qualified beneficiaries who are recognized by the plan as being entitled to elect continuation coverage with respect to the qualifying event, and the date on which coverage under the plan will terminate (or has terminated) unless continuation coverage is elected;

(iv) A statement that each individual who is a qualified beneficiary with respect to the qualifying event has an independent right to elect continuation coverage, that a covered employee or a qualified beneficiary who is the spouse of the covered employee (or was the spouse of the covered employee on the day before the qualifying event occurred) may elect continuation coverage on behalf of all other qualified beneficiaries with respect to the qualifying event, and that a parent or legal guardian may elect continuation coverage on behalf of a minor child;

(v) An explanation of the plan's procedures for electing continuation coverage, including an explanation of the time period during which the election must be made, and the date by which the election must be made;

(vi) An explanation of the consequences of failing to elect or waiving

continuation coverage, including an explanation that a qualified beneficiary's decision whether to elect continuation coverage will affect the future rights of qualified beneficiaries to portability of group health coverage, guaranteed access to individual health coverage, and special enrollment under part 7 of title I of the Act, with a reference to where a qualified beneficiary may obtain additional information about such rights; and a description of the plan's procedures for revoking a waiver of the right to continuation coverage before the date by which the election must be made;

(vii) A description of the continuation coverage that will be made available under the plan, if elected, including the date on which such coverage will commence, either by providing a description of the coverage or by reference to the plan's summary plan description;

(viii) An explanation of the maximum period for which continuation coverage will be available under the plan, if elected; an explanation of the continuation coverage termination date; and an explanation of any events that might cause continuation coverage to be terminated earlier than the end of the maximum period;

(ix) A description of the circumstances (if any) under which the maximum period of continuation coverage may be extended due either to the occurrence of a second qualifying event or a determination by the Social Security Administration, under title II or XVI of the Social Security Act (42 U.S.C. 401 *et seq.* or 1381 *et seq.*) (SSA), that the qualified beneficiary is disabled, and the length of any such extension;

(x) In the case of a notice that offers continuation coverage with a maximum duration of less than 36 months, a description of the plan's requirements regarding the responsibility of qualified beneficiaries to provide notice of a second qualifying event and notice of a disability determination under the SSA, along with a description of the plan's procedures for providing such notices, including the times within which such notices must be provided and the consequences of failing to provide such notices. The notice shall also explain the responsibility of qualified beneficiaries to provide notice that a disabled qualified beneficiary has subsequently been determined to no longer be disabled;

(xi) A description of the amount, if any, that each qualified beneficiary will be required to pay for continuation coverage;

(xii) A description of the due dates for payments, the qualified beneficiaries' right to pay on a monthly basis, the grace periods for payment, the address to which payments should be sent, and the consequences of delayed payment and non-payment;

(xiii) An explanation of the importance of keeping the administrator informed of the current addresses of all participants or beneficiaries under the plan who are or may become qualified beneficiaries; and

(xiv) A statement that the notice does not fully describe continuation coverage or other rights under the plan, and that more complete information regarding such rights is available in the plan's summary plan description or from the plan administrator.

(c) *Notice of unavailability of continuation coverage.* (1) In the event that an administrator receives a notice furnished in accordance with § 2590.606–3 relating to a qualifying event, second qualifying event, or determination of disability by the Social Security Administration regarding a covered employee, qualified beneficiary, or other individual and determines that the individual is not entitled to continuation coverage under part 6 of title I of the Act, the administrator shall provide to such individual an explanation as to why the individual is not entitled to continuation coverage.

(2) The notice required by this paragraph (c) shall be written in a manner calculated to be understood by the average plan participant and shall be furnished by the administrator in accordance with the time frame set out in paragraph (b) of this section that would apply if the administrator received a notice of qualifying event and determined that the individual was entitled to continuation coverage.

(d) *Notice of termination of continuation coverage.* (1) The administrator of a plan that is providing continuation

coverage to one or more qualified beneficiaries with respect to a qualifying event shall provide, in accordance with this paragraph (d), notice to each such qualified beneficiary of any termination of continuation coverage that takes effect earlier than the end of the maximum period of continuation coverage applicable to such qualifying event.

(2) The notice required by this paragraph (d) shall be written in a manner calculated to be understood by the average plan participant and shall contain the following information:

(i) The reason that continuation coverage has terminated earlier than the end of the maximum period of continuation coverage applicable to such qualifying event;

(ii) The date of termination of continuation coverage; and

(iii) Any rights the qualified beneficiary may have under the plan or under applicable law to elect an alternative group or individual coverage, such as a conversion right.

(3) The notice required by this paragraph (d) shall be furnished by the administrator as soon as practicable following the administrator's determination that continuation coverage shall terminate.

(e) *Special notice rules*. The notices required by paragraphs (b), (c), and (d) of this section shall be furnished to each qualified beneficiary or individual, except that:

(1) An administrator may provide notice to a covered employee and the covered employee's spouse by furnishing a single notice addressed to both the covered employee and the covered employee's spouse, if, on the basis of the most recent information available to the plan, the covered employee's spouse resides at the same location as the covered employee; and

(2) An administrator may provide notice to each qualified beneficiary who is the dependent child of a covered employee by furnishing a single notice to the covered employee or the covered employee's spouse, if, on the basis of the most recent information available to the plan, the dependent child resides at the same location as the individual to whom such notice is provided.

(f) *Delivery of notice*. The notices required by this section shall be furnished in any manner consistent with the requirements of § 2520.104b–1 of this chapter, including paragraph (c) of that section relating to the use of electronic media.

(g) *Model notice*. The appendix to this section contains a model notice that is intended to assist administrators in discharging the notice obligations of paragraph (b) of this section. Use of the model notice is not mandatory. The model notice reflects the requirements of this section as they would apply to single-employer group health plans and must be modified if used to provide notice with respect to other types of group health plans, such as multiemployer plans or plans established and maintained by employee organizations for their members. In order to use the model notice, administrators must appropriately add relevant information where indicated in the model notice, select among alternative language and supplement the model notice to reflect applicable plan provisions. Items of information that are not applicable to a particular plan may be deleted. Use of the model notice, appropriately modified and supplemented, will be deemed to satisfy the notice content requirements of paragraph (b)(4) of this section.

(h) *Applicability*. This section shall apply to any notice obligation described in this section that arises on or after the first day of the first plan year beginning on or after November 26, 2004.

APPENDIX TO § 2590.606-4

MODEL COBRA CONTINUATION COVERAGE ELECTION NOTICE
(For use by single-employer group health plans)

[*Enter date of notice*]

Dear: [*Identify the qualified beneficiary(ies), by name or status*]

This notice contains important information about your right to continue your health care coverage in the [*enter name of group health plan*] (the Plan). Please read the information contained in this notice very carefully.

To elect COBRA continuation coverage, follow the instructions on the next page to complete the enclosed Election Form and submit it to us.

If you do not elect COBRA continuation coverage, your coverage under the Plan will end on [*enter date*] due to [*check appropriate box*]:

☐ End of employment
☐ Death of employee
☐ Entitlement to Medicare
☐ Reduction in hours of employment
☐ Divorce or legal separation
☐ Loss of dependent child status

Each person ("qualified beneficiary") in the category(ies) checked below is entitled to elect COBRA continuation coverage, which will continue group health care coverage under the Plan for up to ___ months [*enter* 18 *or* 36*, as appropriate and check appropriate box or boxes; names may be added*]:

☐ Employee or former employee
☐ Spouse or former spouse
☐ Dependent child(ren) covered under the Plan on the day before the event that caused the loss of coverage
☐ Child who is losing coverage under the Plan because he or she is no longer a dependent under the Plan

If elected, COBRA continuation coverage will begin on [*enter date*] and can last until [*enter date*]. [*Add, if appropriate:* You may elect any of the following options for COBRA continuation coverage: [*list available coverage options*].

COBRA continuation coverage will cost: [*enter amount each qualified beneficiary will be required to pay for each option per month of coverage and any other permitted coverage periods.*] You do not have to send any payment with the Election Form. Important additional information about payment for COBRA continuation coverage is included in the pages following the Election Form.

If you have any questions about this notice or your rights to COBRA continuation coverage, you should contact [*enter name of party responsible for COBRA administration for the Plan, with telephone number and address*].

COBRA CONTINUATION COVERAGE ELECTION FORM

INSTRUCTIONS: To elect COBRA continuation coverage, complete this Election Form and return it to us. Under federal law, you must have 60 days after the date of this notice to decide whether you want to elect COBRA continuation coverage under the Plan.

Send completed Election Form to: [*Enter Name and Address*]

This Election Form must be completed and returned by mail [*or describe other means of submission and due date*]. If mailed, it must be post-marked no later than [*enter date*].

If you do not submit a completed Election Form by the due date shown above, you will lose your right to elect COBRA continuation coverage. If you reject COBRA continuation coverage before the due date, you may change your mind as long as you furnish a completed Election Form before the due date. However, if you change your mind after first rejecting COBRA continuation coverage, your COBRA continuation coverage will begin on the date you furnish the completed Election Form.

Read the important information about your rights included in the pages after the Election Form.

I (We) elect COBRA continuation coverage in the [*enter name of plan*] (the Plan) as indicated below:

Name Date of Birth Relationship to Employee SSN (or other identifier)

a. _____

[*Add if appropriate:* Coverage option elected: _____]

b. _____

[*Add if appropriate:* Coverage option elected: _____]

c. _____

[*Add if appropriate:* Coverage option elected: _____]

_____ _____
Signature Date

_____ _____
Print Name Relationship to individual(s) listed above

_____

_____

_____ _____
Print Address Telephone number

IMPORTANT INFORMATION
ABOUT YOUR COBRA CONTINUATION COVERAGE RIGHTS

What is continuation coverage?

Federal law requires that most group health plans (including this Plan) give employees and their families the opportunity to continue their health care coverage when there is a "qualifying event" that would result in a loss of coverage under an employer's plan. Depending on the type of qualifying event, "qualified beneficiaries" can include the employee (or retired employee) covered under the group health plan, the covered employee's spouse, and the dependent children of the covered employee.

Continuation coverage is the same coverage that the Plan gives to other participants or beneficiaries under the Plan who are not receiving continuation coverage. Each qualified beneficiary who elects continuation coverage will have the same rights under the Plan as other participants or beneficiaries covered under the Plan, including [*add if applicable:* open enrollment and] special enrollment rights.

How long will continuation coverage last?

In the case of a loss of coverage due to end of employment or reduction in hours of employment, coverage generally may be continued only for up to a total of 18 months. In the case of losses of coverage due to an employee's death, divorce or legal separation, the employee's becoming entitled to Medicare benefits or a dependent child ceasing to be a dependent under the terms of the plan, coverage may be continued for up to a total of 36 months. When the qualifying event is the end of employment or reduction of the employee's hours of employment, and the employee became entitled to Medicare benefits less than 18 months before the qualifying event, COBRA continuation coverage for qualified beneficiaries other than the employee lasts until 36 months after the date of Medicare entitlement. This notice shows the maximum period of continuation coverage available to the qualified beneficiaries.

Continuation coverage will be terminated before the end of the maximum period if:

- any required premium is not paid in full on time,
- a qualified beneficiary becomes covered, after electing continuation coverage, under another group health plan that does not impose any pre-existing condition exclusion for a pre-existing condition of the qualified beneficiary,
- a qualified beneficiary becomes entitled to Medicare benefits (under Part A, Part B, or both) after electing continuation coverage, or
- the employer ceases to provide any group health plan for its employees.

Continuation coverage may also be terminated for any reason the Plan would terminate coverage of a participant or beneficiary not receiving continuation coverage (such as fraud).

[*If the maximum period shown on page 1 of this notice is less than 36 months, add the following three paragraphs:*]

How can you extend the length of COBRA continuation coverage?

If you elect continuation coverage, an extension of the maximum period of coverage may be available if a qualified beneficiary is disabled or a second qualifying event occurs. You must notify [*enter name of party responsible for COBRA administration*] of a disability or a second qualifying event in order to extend the period of continuation coverage. Failure to provide notice of a disability or second qualifying event may affect the right to extend the period of continuation coverage.

Disability

An 11-month extension of coverage may be available if any of the qualified beneficiaries is determined by the Social Security Administration (SSA) to be disabled. The disability has to have started at some time before the 60th day of COBRA continuation coverage and must last at least until the end of the 18-month period of continuation coverage. [*Describe Plan provisions for requiring notice of disability determination, including time frames and procedures.*] Each qualified beneficiary who has elected continuation coverage will be entitled to the 11-month disability extension if one of them qualifies. If the qualified beneficiary is determined by SSA to no longer be disabled, you must notify the Plan of that fact within 30 days after SSA's determination.

Second Qualifying Event

An 18-month extension of coverage will be available to spouses and dependent children who elect continuation coverage if a second qualifying event occurs during the first 18 months of continuation coverage. The maximum amount of continuation coverage available when a second qualifying event occurs is 36 months. Such second qualifying events may include the death of a covered employee, divorce or separation from the covered employee, the covered employee's becoming entitled to Medicare benefits (under Part A, Part B, or both), or a dependent child's ceasing to be eligible for coverage as a dependent under the Plan. These events can be a second qualifying event only if they would have caused the qualified beneficiary to lose coverage under the Plan if the first qualifying event had not occurred. You must notify the Plan within 60 days after a second qualifying event occurs if you want to extend your continuation coverage.

How can you elect COBRA continuation coverage?

To elect continuation coverage, you must complete the Election Form and furnish it according to the directions on the form. Each qualified beneficiary has a separate right to elect continuation coverage. For example, the employee's spouse may elect continuation coverage even if the employee does not. Continuation coverage may be elected for only one, several, or for all dependent children who are qualified beneficiaries. A parent may elect to continue coverage on behalf of any dependent children. The employee or the employee's spouse can elect continuation coverage on behalf of all of the qualified beneficiaries.

In considering whether to elect continuation coverage, you should take into account that a failure to continue your group health coverage will affect your future rights under federal law. First, you can lose the right to avoid having pre-existing condition exclusions applied to you by other group health plans if you have more than a 63-day gap in health coverage, and election of continuation coverage may help you not have such a gap. Second, you will lose the guaranteed right to purchase individual health insurance policies that do not impose such pre-existing condition exclusions if you do not get continuation coverage for the maximum time available to you. Finally, you should take into account that you have special enrollment rights under federal law. You have the right to request special enrollment in another group health plan for which you are otherwise eligible (such as a plan sponsored by your spouse's employer) within 30 days after your group health coverage ends because of the qualifying event listed above. You will also have the same special enrollment right at the end of continuation coverage if you get continuation coverage for the maximum time available to you.

How much does COBRA continuation coverage cost?

Generally, each qualified beneficiary may be required to pay the entire cost of continuation coverage. The amount a qualified beneficiary may be required to pay may not exceed 102 percent (or, in the case of an extension of continuation coverage due to a disability, 150 percent) of the cost to the group health plan (including both employer and employee contributions) for coverage of a similarly situated plan participant or beneficiary who is not receiving continuation coverage. The required payment for each continuation coverage period for each option is described in this notice.

[*If employees might be eligible for trade adjustment assistance, the following information may be added*: The Trade Act of 2002 created a new tax credit for certain individuals who become eligible for trade adjustment assistance and for certain retired employees who are receiving pension payments from the Pension Benefit Guaranty Corporation (PBGC) (eligible individuals). Under the new tax provisions, eligible individuals can either take a tax credit or get advance payment of 65% of premiums paid for qualified health insurance, including continuation coverage. If you have questions about these new tax provisions, you may call the Health Coverage Tax Credit Customer Contact Center toll-free at 1-866-628-4282. TTD/TTY callers may call toll-free at 1-866-626-4282. More information about the Trade Act is also available at www.doleta.gov/tradeact/2002act_index.asp.

When and how must payment for COBRA continuation coverage be made?

First payment for continuation coverage

If you elect continuation coverage, you do not have to send any payment with the Election Form. However, you must make your first payment for continuation coverage not later than 45 days after the date of your election. (This is the date the Election Notice is post-marked, if mailed.) If you do not make your first payment for continuation coverage in full not later than 45 days after the date of your election, you will lose all continuation coverage rights under the Plan. You are responsible for making sure that the amount of your first payment is correct. You may contact

[*enter appropriate contact information, e.g., the Plan Administrator or other party responsible for COBRA administration under the Plan*] to confirm the correct amount of your first payment.

Periodic payments for continuation coverage

After you make your first payment for continuation coverage, you will be required to make periodic payments for each subsequent coverage period. The amount due for each coverage period for each qualified beneficiary is shown in this notice. The periodic payments can be made on a monthly basis. Under the Plan, each of these periodic payments for continuation coverage is due on the [*enter due day for each monthly payment*] for that coverage period. [*If Plan offers other payment schedules, enter with appropriate dates:* You may instead make payments for continuation coverage for the following coverage periods, due on the following dates:]. If you make a periodic payment on or before the first day of the coverage period to which it applies, your coverage under the Plan will continue for that coverage period without any break. The Plan [*select one:* will *or* will not] send periodic notices of payments due for these coverage periods.

Grace periods for periodic payments

Although periodic payments are due on the dates shown above, you will be given a grace period of 30 days after the first day of the coverage period [*or enter longer period permitted by Plan*] to make each periodic payment. Your continuation coverage will be provided for each coverage period as long as payment for that coverage period is made before the end of the grace period for that payment. [*If Plan suspends coverage during grace period for nonpayment, enter and modify as necessary:* However, if you pay a periodic payment later than the first day of the coverage period to which it applies, but before the end of the grace period for the coverage period, your coverage under the Plan will be suspended as of the first day of the coverage period and then retroactively reinstated (going back to the first day of the coverage period) when the periodic payment is received. This means that any claim you submit for benefits while your coverage is suspended may be denied and may have to be resubmitted once your coverage is reinstated.]

If you fail to make a periodic payment before the end of the grace period for that coverage period, you will lose all rights to continuation coverage under the Plan.

Your first payment and all periodic payments for continuation coverage should be sent to:

[*enter appropriate payment address*]

For more information

This notice does not fully describe continuation coverage or other rights under the Plan. More information about continuation coverage and your rights under the Plan is available in your summary plan description or from the Plan Administrator.

If you have any questions concerning the information in this notice, your rights to coverage, or if you want a copy of your summary plan description, you should contact [*enter name of party responsible for COBRA administration for the Plan, with telephone number and address*].

For more information about your rights under ERISA, including COBRA, the Health Insurance Portability and Accountability Act (HIPAA), and other laws affecting group health plans, contact the U.S. Department of Labor's Employee Benefits Security Administration (EBSA) in your area or visit the EBSA website at www.dol.gov/ebsa. (Addresses and phone numbers of Regional and District EBSA Offices are available through EBSA's website.)

Keep Your Plan Informed of Address Changes

In order to protect your and your family's rights, you should keep the Plan Administrator informed of any changes in your address and the addresses of family members. You should also keep a copy, for your records, of any notices you send to the Plan Administrator.

[69 FR 30097, May 26, 2004; 69 FR 34921, June 23, 2004]

§ 2590.609–1 [Reserved]

§ 2590.609–2 National Medical Support Notice.

(a) This section promulgates the National Medical Support Notice (the Notice), as mandated by section 401(b) of the Child Support Performance and Incentive Act of 1998 (Pub. L. 105–200). If the Notice is appropriately completed and satisfies paragraphs (3) and (4) of section 609(a) of the Employee Retirement Income Security Act (ERISA), the Notice is deemed to be a qualified medical child support order (QMCSO) pursuant to ERISA section 609(a)(5)(C). Section 609(a) of ERISA delineates the rights and obligations of the alternate recipient (child), the participant, and the group health plan under a QMCSO. A copy of the Notice is available on the Internet at *http://www.dol.gov/ebsa*.

(b) For purposes of this section, a plan administrator shall find that a Notice is appropriately completed if it contains the name of an Issuing Agency, the name and mailing address (if any) of an employee who is a participant under the plan, the name and mailing address of one or more alternate recipient(s) (child(ren) of the participant) (or the name and address of a substituted official or agency which has been substituted for the mailing address of the alternate recipient(s)), and identifies an underlying child support order.

(c)(1) Under section 609(a)(3)(A) of ERISA, in order to be qualified, a medical child support order must clearly specify the name and the last known mailing address (if any) of the participant and the name and mailing address of each alternate recipient covered by the order, except that, to the extent provided in the order, the name and mailing address of an official of a State or a political subdivision thereof may be substituted for the mailing address of any such alternate recipient. Section 609(a)(3)(B) of ERISA requires a reasonable description of the type of coverage to be provided to each such alternate recipient, or the manner in which such type of coverage is to be determined. Section 609(a)(3)(C) of ERISA requires that the order specify the period to which such order applies.

(2) The Notice satisfies ERISA section 609(a)(3)(A) by including the necessary identifying information described in § 2590.609–2(b).

(3) The Notice satisfies ERISA section 609(a)(3)(B) by having the Issuing Agency identify either the specific type of coverage or all available group health coverage. If an employer receives a Notice that does not designate either specific type(s) of coverage or all available coverage, the employer and plan administrator should assume that all are designated. The Notice further satisfies ERISA section 609(a)(3)(B) by instructing the plan administrator that if a group health plan has multiple options and the participant is not enrolled, the Issuing Agency will make a selection after the Notice is qualified, and, if the Issuing Agency does not respond within 20 days, the child will be enrolled under the plan's default option (if any).

(4) Section 609(a)(3)(C) of ERISA is satisfied because the Notice specifies that the period of coverage may only

end for the alternate recipient(s) when similarly situated dependents are no longer eligible for coverage under the terms of the plan, or upon the occurrence of certain specified events.

(d)(1) Under ERISA section 609(a)(4), a qualified medical child support order may not require a plan to provide any type or form of benefit, or any option, not otherwise provided under the plan, except to the extent necessary to meet the requirements of a law relating to medical child support described in section 1908 of the Social Security Act, 42 U.S.C. 1396g–1.

(2) The Notice satisfies the conditions of ERISA section 609(a)(4) because it requires the plan to provide to an alternate recipient only those benefits that the plan provides to any dependent of a participant who is enrolled in the plan, and any other benefits that are necessary to meet the requirements of a State law described in such section 1908.

(e) For the purposes of this section, an ''Issuing Agency'' is a State agency that administers the child support enforcement program under Part D of Title IV of the Social Security Act.

[65 FR 82142, Dec. 27, 2000]

Subpart B—Health Coverage Portability, Nondiscrimination, and Renewability

SOURCE: 62 FR 16941, Apr. 8, 1997, unless otherwise noted. Redesignated at 65 FR 82142, Dec. 27, 2000.

§ 2590.701–1 Basis and scope.

(a) *Statutory basis.* This Subpart B implements Part 7 of Subtitle B of Title I of the Employee Retirement Income Security Act of 1974, as amended (hereinafter ERISA or the Act).

(b) *Scope.* A group health plan or health insurance issuer offering group health insurance coverage may provide greater rights to participants and beneficiaries than those set forth in this Subpart B. This Subpart B sets forth minimum requirements for group health plans and group health insurance issuers offering group health insurance coverage concerning certain consumer protections of the Health Insurance Portability and Accountability Act (HIPAA), including special enrollment periods and the prohibition against discrimination based on a health factor, as amended by the Patient Protection and Affordable Care Act (Affordable Care Act). Other consumer protection provisions, including other protections provided by the Affordable Care Act and the Mental Health Parity and Addiction Equity Act, are set forth in Subpart C of this part.

[69 FR 78763, Dec. 30, 2004, as amended at 74 FR 51683, Oct. 7, 2009; 79 FR 10308, Feb. 24, 2014]

§ 2590.701–2 Definitions.

Unless otherwise provided, the definitions in this section govern in applying the provisions of §§ 2590.701 through 2590.734.

Affiliation period means a period of time that must expire before health insurance coverage provided by an HMO becomes effective, and during which the HMO is not required to provide benefits.

COBRA definitions:

(1) *COBRA* means Title X of the Consolidated Omnibus Budget Reconciliation Act of 1985, as amended.

(2) *COBRA continuation coverage* means coverage, under a group health plan, that satisfies an applicable COBRA continuation provision.

(3) *COBRA continuation provision* means sections 601–608 of the Act, section 4980B of the Internal Revenue Code (other than paragraph (f)(1) of such section 4980B insofar as it relates to pediatric vaccines), or Title XXII of the PHS Act.

(4) *Exhaustion of COBRA continuation coverage* means that an individual's COBRA continuation coverage ceases for any reason other than either failure of the individual to pay premiums on a timely basis, or for cause (such as making a fraudulent claim or an intentional misrepresentation of a material fact in connection with the plan). An individual is considered to have exhausted COBRA continuation coverage if such coverage ceases—

(i) Due to the failure of the employer or other responsible entity to remit premiums on a timely basis;

(ii) When the individual no longer resides, lives, or works in the service

area of an HMO or similar program (whether or not within the choice of the individual) and there is no other COBRA continuation coverage available to the individual; or

(iii) When the individual incurs a claim that would meet or exceed a lifetime limit on all benefits and there is no other COBRA continuation coverage available to the individual.

Condition means a *medical condition*.

Creditable coverage means *creditable coverage* within the meaning of § 2590.701–4(a).

Dependent means any individual who is or may become eligible for coverage under the terms of a group health plan because of a relationship to a participant.

Enroll means to become covered for benefits under a group health plan (that is, when coverage becomes effective), without regard to when the individual may have completed or filed any forms that are required in order to become covered under the plan. For this purpose, an individual who has health coverage under a group health plan is enrolled in the plan regardless of whether the individual elects coverage, the individual is a dependent who becomes covered as a result of an election by a participant, or the individual becomes covered without an election.

Enrollment date means the first day of coverage or, if there is a waiting period, the first day of the waiting period. If an individual receiving benefits under a group health plan changes benefit packages, or if the plan changes group health insurance issuers, the individual's enrollment date does not change.

Excepted benefits means the benefits described as excepted in § 2590.732(c).

First day of coverage means, in the case of an individual covered for benefits under a group health plan, the first day of coverage under the plan and, in the case of an individual covered by health insurance coverage in the individual market, the first day of coverage under the policy or contract.

Genetic information has the meaning given the term in § 2590.702–1(a)(3) of this Part.

Group health insurance coverage means health insurance coverage offered in connection with a group health plan.

Group health plan or *plan* means a *group health plan* within the meaning of § 2590.732(a).

Group market means the market for health insurance coverage offered in connection with a group health plan. (However, certain very small plans may be treated as being in the individual market, rather than the group market; see the definition of *individual market* in this section.)

Health insurance coverage means benefits consisting of medical care (provided directly, through insurance or reimbursement, or otherwise) under any hospital or medical service policy or certificate, hospital or medical service plan contract, or HMO contract offered by a health insurance issuer. Health insurance coverage includes group health insurance coverage, individual health insurance coverage, and short-term, limited-duration insurance.

Health insurance issuer or *issuer* means an insurance company, insurance service, or insurance organization (including an HMO) that is required to be licensed to engage in the business of insurance in a State and that is subject to State law that regulates insurance (within the meaning of section 514(b)(2) of the Act). Such term does not include a group health plan.

Health maintenance organization or *HMO* means—

(1) A federally qualified health maintenance organization (as defined in section 1301(a) of the PHS Act);

(2) An organization recognized under State law as a health maintenance organization; or

(3) A similar organization regulated under State law for solvency in the same manner and to the same extent as such a health maintenance organization.

Individual health insurance coverage means health insurance coverage offered to individuals in the individual market, but does not include short-term, limited-duration insurance. Individual health insurance coverage can include dependent coverage.

Individual market means the market for health insurance coverage offered to individuals other than in connection with a group health plan. Unless a

State elects otherwise in accordance with section 2791(e)(1)(B)(ii) of the PHS Act, such term also includes coverage offered in connection with a group health plan that has fewer than two participants who are current employees on the first day of the plan year.

Internal Revenue Code means the Internal Revenue Code of 1986, as amended (Title 26, United States Code).

Issuer means a *health insurance issuer*.

Late enrollee means an individual whose enrollment in a plan is a late enrollment.

Late enrollment means enrollment of an individual under a group health plan other than on the earliest date on which coverage can become effective for the individual under the terms of the plan; or through special enrollment. (For rules relating to special enrollment, see § 2590.701–6.) If an individual ceases to be eligible for coverage under a plan, and then subsequently becomes eligible for coverage under the plan, only the individual's most recent period of eligibility is taken into account in determining whether the individual is a late enrollee under the plan with respect to the most recent period of coverage. Similar rules apply if an individual again becomes eligible for coverage following a suspension of coverage that applied generally under the plan.

Medical care means amounts paid for—

(1) The diagnosis, cure, mitigation, treatment, or prevention of disease, or amounts paid for the purpose of affecting any structure or function of the body;

(2) Transportation primarily for and essential to medical care referred to in paragraph (1) of this definition; and

(3) Insurance covering medical care referred to in paragraphs (1) and (2) of this definition.

Medical condition or *condition* means any condition, whether physical or mental, including, but not limited to, any condition resulting from illness, injury (whether or not the injury is accidental), pregnancy, or congenital malformation. However, genetic information is not a condition.

Participant means *participant* within the meaning of section 3(7) of the Act.

Placement, or being placed, for adoption means the assumption and retention of a legal obligation for total or partial support of a child by a person with whom the child has been placed in anticipation of the child's adoption. The child's placement for adoption with such person ends upon the termination of such legal obligation.

Plan year means the year that is designated as the plan year in the plan document of a group health plan, except that if the plan document does not designate a plan year or if there is no plan document, the plan year is—

(1) The deductible or limit year used under the plan;

(2) If the plan does not impose deductibles or limits on a yearly basis, then the plan year is the policy year;

(3) If the plan does not impose deductibles or limits on a yearly basis, and either the plan is not insured or the insurance policy is not renewed on an annual basis, then the plan year is the employer's taxable year; or

(4) In any other case, the plan year is the calendar year.

Preexisting condition exclusion means a limitation or exclusion of benefits (including a denial of coverage) based on the fact that the condition was present before the effective date of coverage (or if coverage is denied, the date of the denial) under a group health plan or group or individual health insurance coverage (or other coverage provided to federally eligible individuals pursuant to 45 CFR part 148), whether or not any medical advice, diagnosis, care, or treatment was recommended or received before that day. A preexisting condition exclusion includes any limitation or exclusion of benefits (including a denial of coverage) applicable to an individual as a result of information relating to an individual's health status before the individual's effective date of coverage (or if coverage is denied, the date of the denial) under a group health plan, or group or individual health insurance coverage (or other coverage provided to Federally eligible individuals pursuant to 45 CFR part 148), such as a condition identified as a result of a pre-enrollment questionnaire or physical examination given to the individual, or review of

medical records relating to the pre-enrollment period.

Public health plan means *public health plan* within the meaning of § 2590.701–4(a)(1)(ix).

Public Health Service Act (PHS Act) means the Public Health Service Act (42 U.S.C. 201, *et seq.*).

Short-term, limited-duration insurance means health insurance coverage provided pursuant to a contract with an issuer that has an expiration date specified in the contract (taking into account any extensions that may be elected by the policyholder without the issuer's consent) that is less than 12 months after the original effective date of the contract.

Significant break in coverage means a *significant break in coverage* within the meaning of § 2590.701–4(b)(2)(iii).

Special enrollment means enrollment in a group health plan or group health insurance coverage under the rights described in § 2590.701–6.

State means each of the several States, the District of Columbia, Puerto Rico, the Virgin Islands, Guam, American Samoa, and the Northern Mariana Islands.

State health benefits risk pool means a *State health benefits risk pool* within the meaning of § 2590.701–4(a)(1)(vii).

Waiting period means *waiting period* within the meaning of § 2590.715–2708(b).

[69 FR 78763, Dec. 30, 2004, as amended at 74 FR 51683, Oct. 7, 2009; 75 FR 37229, June 28, 2010; 79 FR 10308, Feb. 24, 2014]

§ 2590.701–3 Preexisting condition exclusions.

(a) *Preexisting condition exclusion defined*—(1)

(1) A *preexisting condition exclusion* means a *preexisting condition exclusion* within the meaning set forth in § 2590.701–2 of this part.

(2) *Examples*. The rules of this paragraph (a)(1) are illustrated by the following examples:

Example 1. (i) *Facts*. A group health plan provides benefits solely through an insurance policy offered by Issuer *S*. At the expiration of the policy, the plan switches coverage to a policy offered by Issuer *T*. Issuer *T*'s policy excludes benefits for any prosthesis if the body part was lost before the effective date of coverage under the policy.

(ii) *Conclusion*. In this *Example 1*, the exclusion of benefits for any prosthesis if the body part was lost before the effective date of coverage is a preexisting condition exclusion because it operates to exclude benefits for a condition based on the fact that the condition was present before the effective date of coverage under the policy. The exclusion of benefits, therefore, is prohibited.

Example 2. (i) *Facts*. A group health plan provides coverage for cosmetic surgery in cases of accidental injury, but only if the injury occurred while the individual was covered under the plan.

(ii) *Conclusion*. In this *Example 2*, the plan provision excluding cosmetic surgery benefits for individuals injured before enrolling in the plan is a preexisting condition exclusion because it operates to exclude benefits relating to a condition based on the fact that the condition was present before the effective date of coverage. The plan provision, therefore, is prohibited.

Example 3. (i) *Facts*. A group health plan provides coverage for the treatment of diabetes, generally not subject to any requirement to obtain an approval for a treatment plan. However, if an individual was diagnosed with diabetes before the effective date of coverage under the plan, diabetes coverage is subject to a requirement to obtain approval of a treatment plan in advance.

(ii) *Conclusion*. In this *Example 3*, the requirement to obtain advance approval of a treatment plan is a preexisting condition exclusion because it limits benefits for a condition based on the fact that the condition was present before the effective date of coverage. The plan provision, therefore, is prohibited.

Example 4. (i) *Facts*. A group health plan provides coverage for three infertility treatments. The plan counts against the three-treatment limit benefits provided under prior health coverage.

(ii) *Conclusion*. In this *Example 4*, counting benefits for a specific condition provided under prior health coverage against a treatment limit for that condition is a preexisting condition exclusion because it operates to limit benefits for a condition based on the fact that the condition was present before the effective date of coverage. The plan provision, therefore, is prohibited.

Example 5. (i) *Facts*. When an individual's coverage begins under a group health plan, the individual generally becomes eligible for all benefits. However, benefits for pregnancy are not available until the individual has been covered under the plan for 12 months.

(ii) *Conclusion*. In this *Example 5*, the requirement to be covered under the plan for 12 months to be eligible for pregnancy benefits is a subterfuge for a preexisting condition exclusion because it is designed to exclude benefits for a condition (pregnancy) that arose before the effective date of coverage. The plan provision, therefore, is prohibited.

Example 6. (i) *Facts*. A group health plan provides coverage for medically necessary

items and services, generally including treatment of heart conditions. However, the plan does not cover those same items and services when used for treatment of congenital heart conditions.

(ii) *Conclusion*. In this *Example 6*, the exclusion of coverage for treatment of congenital heart conditions is a preexisting condition exclusion because it operates to exclude benefits relating to a condition based on the fact that the condition was present before the effective date of coverage. The plan provision, therefore, is prohibited.

Example 7. (i) *Facts*. A group health plan generally provides coverage for medically necessary items and services. However, the plan excludes coverage for the treatment of cleft palate.

(ii) *Conclusion*. In this *Example 7*, the exclusion of coverage for treatment of cleft palate is not a preexisting condition exclusion because the exclusion applies regardless of when the condition arose relative to the effective date of coverage. The plan provision, therefore, is not prohibited. (But see 45 CFR 147.150, which may require coverage of cleft palate as an essential health benefit for health insurance coverage in the individual or small group market, depending on the essential health benefits benchmark plan as defined in 45 CFR 156.20).

Example 8. (i) *Facts*. A group health plan provides coverage for treatment of cleft palate, but only if the individual being treated has been continuously covered under the plan from the date of birth.

(ii) *Conclusion*. In this *Example 8*, the exclusion of coverage for treatment of cleft palate for individuals who have not been covered under the plan from the date of birth operates to exclude benefits in relation to a condition based on the fact that the condition was present before the effective date of coverage. The plan provision, therefore, is prohibited.

(b) *General rules*. *See* § 2590.715–2704 for rules prohibiting the imposition of a preexisting condition exclusion.

[69 FR 78763, Dec. 30, 2004, as amended at 75 FR 37229, June 28, 2010; 79 FR 10308, Feb. 24, 2014]

§ 2590.701–4 Rules relating to creditable coverage.

(a) *General rules*—(1) *Creditable coverage*. For purposes of this section, except as provided in paragraph (a)(2) of this section, the term *creditable coverage* means coverage of an individual under any of the following:

(i) A group health plan as defined in § 2590.732(a).

(ii) Health insurance coverage as defined in § 2590.701–2 (whether or not the entity offering the coverage is subject to Part 7 of Subtitle B of Title I of the Act, and without regard to whether the coverage is offered in the group market, the individual market, or otherwise).

(iii) Part A or B of Title XVIII of the Social Security Act (Medicare).

(iv) Title XIX of the Social Security Act (Medicaid), other than coverage consisting solely of benefits under section 1928 of the Social Security Act (the program for distribution of pediatric vaccines).

(v) Title 10 U.S.C. Chapter 55 (medical and dental care for members and certain former members of the uniformed services, and for their dependents; for purposes of Title 10 U.S.C. Chapter 55, *uniformed services* means the armed forces and the Commissioned Corps of the National Oceanic and Atmospheric Administration and of the Public Health Service).

(vi) A medical care program of the Indian Health Service or of a tribal organization.

(vii) A State health benefits risk pool. For purposes of this section, a *State health benefits risk pool* means—

(A) An organization qualifying under section 501(c)(26) of the Internal Revenue Code;

(B) A qualified high risk pool described in section 2744(c)(2) of the PHS Act; or

(C) Any other arrangement sponsored by a State, the membership composition of which is specified by the State and which is established and maintained primarily to provide health coverage for individuals who are residents of such State and who, by reason of the existence or history of a medical condition—

(*1*) Are unable to acquire medical care coverage for such condition through insurance or from an HMO, or

(*2*) Are able to acquire such coverage only at a rate which is substantially in excess of the rate for such coverage through the membership organization.

(viii) A health plan offered under Title 5 U.S.C. Chapter 89 (the Federal Employees Health Benefits Program).

(ix) A public health plan. For purposes of this section, a *public health plan* means any plan established or

maintained by a State, the U.S. government, a foreign country, or any political subdivision of a State, the U.S. government, or a foreign country that provides health coverage to individuals who are enrolled in the plan.

(x) A health benefit plan under section 5(e) of the Peace Corps Act (22 U.S.C. 2504(e)).

(xi) Title XXI of the Social Security Act (State Children's Health Insurance Program).

(2) *Excluded coverage.* Creditable coverage does not include coverage of solely excepted benefits (described in § 2590.732).

(b) *Counting creditable coverage rules superseded by prohibition on preexisting condition exclusion. See* § 2590.715–2704 for rules prohibiting the imposition of a preexisting condition exclusion.

[69 FR 78763, Dec. 30, 2004, as amended at 79 FR 10309, Feb. 24, 2014]

§ 2590.701–5 Evidence of creditable coverage.

(a) *In general.* The rules for providing certificates of creditable coverage and demonstrating creditable coverage have been superseded by the prohibition on preexisting condition exclusions. *See* § 2590.715–2704 for rules prohibiting the imposition of a preexisting condition exclusion.

(b) *Applicability.* The provisions of this section apply beginning December 31, 2014.

[79 FR 10309, Feb. 24, 2014]

§ 2590.701–6 Special enrollment periods.

(a) *Special enrollment for certain individuals who lose coverage*—(1) *In general.* A group health plan, and a health insurance issuer offering health insurance coverage in connection with a group health plan, is required to permit current employees and dependents (as defined in § 2590.701–2) who are described in paragraph (a)(2) of this section to enroll for coverage under the terms of the plan if the conditions in paragraph (a)(3) of this section are satisfied. The special enrollment rights under this paragraph (a) apply without regard to the dates on which an individual would otherwise be able to enroll under the plan.

(2) *Individuals eligible for special enrollment*—(i) *When employee loses coverage.* A current employee and any dependents (including the employee's spouse) each are eligible for special enrollment in any benefit package under the plan (subject to plan eligibility rules conditioning dependent enrollment on enrollment of the employee) if—

(A) The employee and the dependents are otherwise eligible to enroll in the benefit package;

(B) When coverage under the plan was previously offered, the employee had coverage under any group health plan or health insurance coverage; and

(C) The employee satisfies the conditions of paragraph (a)(3)(i), (ii), or (iii) of this section and, if applicable, paragraph (a)(3)(iv) of this section.

(ii) *When dependent loses coverage*—(A) A dependent of a current employee (including the employee's spouse) and the employee each are eligible for special enrollment in any benefit package under the plan (subject to plan eligibility rules conditioning dependent enrollment on enrollment of the employee) if—

(*1*) The dependent and the employee are otherwise eligible to enroll in the benefit package;

(*2*) When coverage under the plan was previously offered, the dependent had coverage under any group health plan or health insurance coverage; and

(*3*) The dependent satisfies the conditions of paragraph (a)(3)(i), (ii), or (iii) of this section and, if applicable, paragraph (a)(3)(iv) of this section.

(B) However, the plan or issuer is not required to enroll any other dependent unless that dependent satisfies the criteria of this paragraph (a)(2)(ii), or the employee satisfies the criteria of paragraph (a)(2)(i) of this section.

(iii) *Examples.* The rules of this paragraph (a)(2) are illustrated by the following examples:

Example 1. (i) *Facts.* Individual *A* works for Employer *X*. *A*, *A*'s spouse, and *A*'s dependent children are eligible but not enrolled for coverage under *X*'s group health plan. *A*'s spouse works for Employer *Y* and at the time coverage was offered under *X*'s plan, *A* was enrolled in coverage under *Y*'s plan. Then, *A* loses eligibility for coverage under *Y*'s plan.

(ii) *Conclusion*. In this *Example 1*, because *A* satisfies the conditions for special enrollment under paragraph (a)(2)(i) of this section, *A*, *A*'s spouse, and *A*'s dependent children are eligible for special enrollment under *X*'s plan.

Example 2. (i) *Facts*. Individual *A* and *A*'s spouse are eligible but not enrolled for coverage under Group Health Plan *P* maintained by *A*'s employer. When *A* was first presented with an opportunity to enroll *A* and *A*'s spouse, they did not have other coverage. Later, *A* and *A*'s spouse enroll in Group Health Plan *Q* maintained by the employer of *A*'s spouse. During a subsequent open enrollment period in *P*, *A* and *A*'s spouse did not enroll because of their coverage under *Q*. They then lose eligibility for coverage under *Q*.

(ii) *Conclusion*. In this *Example 2*, because *A* and *A*'s spouse were covered under *Q* when they did not enroll in *P* during open enrollment, they satisfy the conditions for special enrollment under paragraphs (a)(2)(i) and (ii) of this section. Consequently, *A* and *A*'s spouse are eligible for special enrollment under *P*.

Example 3. (i) *Facts*. Individual *B* works for Employer *X*. *B* and *B*'s spouse are eligible but not enrolled for coverage under *X*'s group health plan. *B*'s spouse works for Employer *Y* and at the time coverage was offered under *X*'s plan, *B*'s spouse was enrolled in self-only coverage under *Y*'s group health plan. Then, *B*'s spouse loses eligibility for coverage under *Y*'s plan.

(ii) *Conclusion*. In this *Example 3*, because *B*'s spouse satisfies the conditions for special enrollment under paragraph (a)(2)(ii) of this section, both *B* and *B*'s spouse are eligible for special enrollment under *X*'s plan.

Example 4. (i) *Facts*. Individual *A* works for Employer *X*. *X* maintains a group health plan with two benefit packages—an HMO option and an indemnity option. Self-only and family coverage are available under both options. *A* enrolls for self-only coverage in the HMO option. *A*'s spouse works for Employer *Y* and was enrolled for self-only coverage under *Y*'s plan at the time coverage was offered under *X*'s plan. Then, *A*'s spouse loses coverage under *Y*'s plan. *A* requests special enrollment for *A* and *A*'s spouse under the plan's indemnity option.

(ii) *Conclusion*. In this *Example 4,* because *A*'s spouse satisfies the conditions for special enrollment under paragraph (a)(2)(ii) of this section, both *A* and *A*'s spouse can enroll in either benefit package under *X*'s plan. Therefore, if *A* requests enrollment in accordance with the requirements of this section, the plan must allow *A* and *A*'s spouse to enroll in the indemnity option.

(3) *Conditions for special enrollment*—(i) *Loss of eligibility for coverage*. In the case of an employee or dependent who has coverage that is not COBRA continuation coverage, the conditions of this paragraph (a)(3)(i) are satisfied at the time the coverage is terminated as a result of loss of eligibility (regardless of whether the individual is eligible for or elects COBRA continuation coverage). Loss of eligibility under this paragraph (a)(3)(i) does not include a loss due to the failure of the employee or dependent to pay premiums on a timely basis or termination of coverage for cause (such as making a fraudulent claim or an intentional misrepresentation of a material fact in connection with the plan). Loss of eligibility for coverage under this paragraph (a)(3)(i) includes (but is not limited to)—

(A) Loss of eligibility for coverage as a result of legal separation, divorce, cessation of dependent status (such as attaining the maximum age to be eligible as a dependent child under the plan), death of an employee, termination of employment, reduction in the number of hours of employment, and any loss of eligibility for coverage after a period that is measured by reference to any of the foregoing;

(B) In the case of coverage offered through an HMO, or other arrangement, in the individual market that does not provide benefits to individuals who no longer reside, live, or work in a service area, loss of coverage because an individual no longer resides, lives, or works in the service area (whether or not within the choice of the individual);

(C) In the case of coverage offered through an HMO, or other arrangement, in the group market that does not provide benefits to individuals who no longer reside, live, or work in a service area, loss of coverage because an individual no longer resides, lives, or works in the service area (whether or not within the choice of the individual), and no other benefit package is available to the individual; and

(D) A situation in which a plan no longer offers any benefits to the class of similarly situated individuals (as described in § 2590.702(d)) that includes the individual.

(ii) *Termination of employer contributions*. In the case of an employee or dependent who has coverage that is not

COBRA continuation coverage, the conditions of this paragraph (a)(3)(ii) are satisfied at the time employer contributions towards the employee's or dependent's coverage terminate. Employer contributions include contributions by any current or former employer that was contributing to coverage for the employee or dependent.

(iii) *Exhaustion of COBRA continuation coverage.* In the case of an employee or dependent who has coverage that is COBRA continuation coverage, the conditions of this paragraph (a)(3)(iii) are satisfied at the time the COBRA continuation coverage is exhausted. For purposes of this paragraph (a)(3)(iii), an individual who satisfies the conditions for special enrollment of paragraph (a)(3)(i) of this section, does not enroll, and instead elects and exhausts COBRA continuation coverage satisfies the conditions of this paragraph (a)(3)(iii). (*Exhaustion of COBRA continuation coverage* is defined in § 2590.701–2.)

(iv) *Written statement.* A plan may require an employee declining coverage (for the employee or any dependent of the employee) to state in writing whether the coverage is being declined due to other health coverage only if, at or before the time the employee declines coverage, the employee is provided with notice of the requirement to provide the statement (and the consequences of the employee's failure to provide the statement). If a plan requires such a statement, and an employee does not provide it, the plan is not required to provide special enrollment to the employee or any dependent of the employee under this paragraph (a)(3). A plan must treat an employee as having satisfied the plan requirement permitted under this paragraph (a)(3)(iv) if the employee provides a written statement that coverage was being declined because the employee or dependent had other coverage; a plan cannot require anything more for the employee to satisfy the plan's requirement to provide a written statement. (For example, the plan cannot require that the statement be notarized.)

(v) The rules of this paragraph (a)(3) are illustrated by the following examples:

Example 1. (i) *Facts.* Individual *D* enrolls in a group health plan maintained by Employer *Y*. At the time *D* enrolls, *Y* pays 70 percent of the cost of employee coverage and *D* pays the rest. *Y* announces that beginning January 1, *Y* will no longer make employer contributions towards the coverage. Employees may maintain coverage, however, if they pay the total cost of the coverage.

(ii) *Conclusion.* In this *Example 1,* employer contributions towards *D*'s coverage ceased on January 1 and the conditions of paragraph (a)(3)(ii) of this section are satisfied on this date (regardless of whether *D* elects to pay the total cost and continue coverage under *Y*'s plan).

Example 2. (i) *Facts.* A group health plan provides coverage through two options—Option 1 and Option 2. Employees can enroll in either option only within 30 days of hire or on January 1 of each year. Employee *A* is eligible for both options and enrolls in Option 1. Effective July 1 the plan terminates coverage under Option 1 and the plan does not create an immediate open enrollment opportunity into Option 2.

(ii) *Conclusion.* In this *Example 2, A* has experienced a loss of eligibility for coverage that satisfies paragraph (a)(3)(i) of this section, and has satisfied the other conditions for special enrollment under paragraph (a)(2)(i) of this section. Therefore, if *A* satisfies the other conditions of this paragraph (a), the plan must permit *A* to enroll in Option 2 as a special enrollee. (*A* may also be eligible to enroll in another group health plan, such as a plan maintained by the employer of *A*'s spouse, as a special enrollee.) The outcome would be the same if Option 1 was terminated by an issuer and the plan made no other coverage available to *A*.

Example 3. (i) *Facts.* Individual *C* is covered under a group health plan maintained by Employer *X*. While covered under *X*'s plan, *C* was eligible for but did not enroll in a plan maintained by Employer *Z*, the employer of *C*'s spouse. *C* terminates employment with *X* and loses eligibility for coverage under *X*'s plan. *C* has a special enrollment right to enroll in *Z*'s plan, but *C* instead elects COBRA continuation coverage under *X*'s plan. *C* exhausts COBRA continuation coverage under *X*'s plan and requests special enrollment in *Z*'s plan.

(ii) *Conclusion.* In this *Example 3, C* has satisfied the conditions for special enrollment under paragraph (a)(3)(iii) of this section, and has satisfied the other conditions for special enrollment under paragraph (a)(2)(i) of this section. The special enrollment right that *C* had into *Z*'s plan immediately after the loss of eligibility for coverage under *X*'s plan was an offer of coverage under *Z*'s plan. When *C* later exhausts COBRA coverage under *X*'s plan, *C* has a second special enrollment right in *Z*'s plan.

(4) *Applying for special enrollment and effective date of coverage*—(i) A plan or issuer must allow an employee a period of at least 30 days after an event described in paragraph (a)(3) of this section to request enrollment (for the employee or the employee's dependent).

(ii) Coverage must begin no later than the first day of the first calendar month beginning after the date the plan or issuer receives the request for special enrollment.

(b) *Special enrollment with respect to certain dependent beneficiaries*—(1) *In general*. A group health plan, and a health insurance issuer offering health insurance coverage in connection with a group health plan, that makes coverage available with respect to dependents is required to permit individuals described in paragraph (b)(2) of this section to be enrolled for coverage in a benefit package under the terms of the plan. Paragraph (b)(3) of this section describes the required special enrollment period and the date by which coverage must begin. The special enrollment rights under this paragraph (b) apply without regard to the dates on which an individual would otherwise be able to enroll under the plan.

(2) *Individuals eligible for special enrollment*. An individual is described in this paragraph (b)(2) if the individual is otherwise eligible for coverage in a benefit package under the plan and if the individual is described in paragraph (b)(2)(i), (ii), (iii), (iv), (v), or (vi) of this section.

(i) *Current employee only*. A current employee is described in this paragraph (b)(2)(i) if a person becomes a dependent of the individual through marriage, birth, adoption, or placement for adoption.

(ii) *Spouse of a participant only*. An individual is described in this paragraph (b)(2)(ii) if either—

(A) The individual becomes the spouse of a participant; or

(B) The individual is a spouse of a participant and a child becomes a dependent of the participant through birth, adoption, or placement for adoption.

(iii) *Current employee and spouse*. A current employee and an individual who is or becomes a spouse of such an employee, are described in this paragraph (b)(2)(iii) if either—

(A) The employee and the spouse become married; or

(B) The employee and spouse are married and a child becomes a dependent of the employee through birth, adoption, or placement for adoption.

(iv) *Dependent of a participant only*. An individual is described in this paragraph (b)(2)(iv) if the individual is a dependent (as defined in § 2590.701–2) of a participant and the individual has become a dependent of the participant through marriage, birth, adoption, or placement for adoption.

(v) *Current employee and a new dependent*. A current employee and an individual who is a dependent of the employee, are described in this paragraph (b)(2)(v) if the individual becomes a dependent of the employee through marriage, birth, adoption, or placement for adoption.

(vi) *Current employee, spouse, and a new dependent*. A current employee, the employee's spouse, and the employee's dependent are described in this paragraph (b)(2)(vi) if the dependent becomes a dependent of the employee through marriage, birth, adoption, or placement for adoption.

(3) *Applying for special enrollment and effective date of coverage*—(i) *Request*. A plan or issuer must allow an individual a period of at least 30 days after the date of the marriage, birth, adoption, or placement for adoption (or, if dependent coverage is not generally made available at the time of the marriage, birth, adoption, or placement for adoption, a period of at least 30 days after the date the plan makes dependent coverage generally available) to request enrollment (for the individual or the individual's dependent).

(ii) *Reasonable procedures for special enrollment*. [Reserved]

(iii) *Date coverage must begin*—(A) *Marriage*. In the case of marriage, coverage must begin no later than the first day of the first calendar month beginning after the date the plan or issuer receives the request for special enrollment.

(B) *Birth, adoption, or placement for adoption*. Coverage must begin in the case of a dependent's birth on the date

of birth and in the case of a dependent's adoption or placement for adoption no later than the date of such adoption or placement for adoption (or, if dependent coverage is not made generally available at the time of the birth, adoption, or placement for adoption, the date the plan makes dependent coverage available).

(4) *Examples*. The rules of this paragraph (b) are illustrated by the following examples:

Example 1. (i) *Facts*. An employer maintains a group health plan that offers all employees employee-only coverage, employee-plus-spouse coverage, or family coverage. Under the terms of the plan, any employee may elect to enroll when first hired (with coverage beginning on the date of hire) or during an annual open enrollment period held each December (with coverage beginning the following January 1). Employee *A* is hired on September 3. *A* is married to *B*, and they have no children. On March 15 in the following year a child *C* is born to *A* and *B*. Before that date, *A* and *B* have not been enrolled in the plan.

(ii) *Conclusion*. In this *Example 1*, the conditions for special enrollment of an employee with a spouse and new dependent under paragraph (b)(2)(vi) of this section are satisfied. If *A* satisfies the conditions of paragraph (b)(3) of this section for requesting enrollment timely, the plan will satisfy this paragraph (b) if it allows *A* to enroll either with employee-only coverage, with employee-plus-spouse coverage (for *A* and *B*), or with family coverage (for *A*, *B*, and *C*). The plan must allow whatever coverage is chosen to begin on March 15, the date of *C*'s birth.

Example 2. (i) *Facts*. Individual *D* works for Employer X. *X* maintains a group health plan with two benefit packages—an HMO option and an indemnity option. Self-only and family coverage are available under both options. *D* enrolls for self-only coverage in the HMO option. Then, a child, E, is placed for adoption with *D*. Within 30 days of the placement of *E* for adoption, *D* requests enrollment for *D* and *E* under the plan's indemnity option.

(ii) *Conclusion*. In this *Example 2*, *D* and *E* satisfy the conditions for special enrollment under paragraphs (b)(2)(v) and (b)(3) of this section. Therefore, the plan must allow *D* and *E* to enroll in the indemnity coverage, effective as of the date of the placement for adoption.

(c) *Notice of special enrollment*. At or before the time an employee is initially offered the opportunity to enroll in a group health plan, the plan must furnish the employee with a notice of special enrollment that complies with the requirements of this paragraph (c).

(1) *Description of special enrollment rights*. The notice of special enrollment must include a description of special enrollment rights. The following model language may be used to satisfy this requirement:

If you are declining enrollment for yourself or your dependents (including your spouse) because of other health insurance or group health plan coverage, you may be able to enroll yourself and your dependents in this plan if you or your dependents lose eligibility for that other coverage (or if the employer stops contributing towards your or your dependents' other coverage). However, you must request enrollment within [insert "30 days" or any longer period that applies under the plan] after your or your dependents' other coverage ends (or after the employer stops contributing toward the other coverage).

In addition, if you have a new dependent as a result of marriage, birth, adoption, or placement for adoption, you may be able to enroll yourself and your dependents. However, you must request enrollment within [insert "30 days" or any longer period that applies under the plan] after the marriage, birth, adoption, or placement for adoption.

To request special enrollment or obtain more information, contact [insert the name, title, telephone number, and any additional contact information of the appropriate plan representative].

(2) *Additional information that may be required*. The notice of special enrollment must also include, if applicable, the notice described in paragraph (a)(3)(iv) of this section (the notice required to be furnished to an individual declining coverage if the plan requires the reason for declining coverage to be in writing).

(d) *Treatment of special enrollees*—(1) If an individual requests enrollment while the individual is entitled to special enrollment under either paragraph (a) or (b) of this section, the individual is a special enrollee, even if the request for enrollment coincides with a late enrollment opportunity under the plan. Therefore, the individual cannot be treated as a late enrollee.

(2) Special enrollees must be offered all the benefit packages available to similarly situated individuals who enroll when first eligible. For this purpose, any difference in benefits or cost-

sharing requirements for different individuals constitutes a different benefit package. In addition, a special enrollee cannot be required to pay more for coverage than a similarly situated individual who enrolls in the same coverage when first eligible.

(3) The rules of this section are illustrated by the following example:

Example. (i) *Facts.* Employer *Y* maintains a group health plan that has an enrollment period for late enrollees every November 1 through November 30 with coverage effective the following January 1. On October 18, Individual *B* loses coverage under another group health plan and satisfies the requirements of paragraphs (a)(2), (3), and (4) of this section. *B* submits a completed application for coverage on November 2.

(ii) *Conclusion.* In this *Example, B* is a special enrollee. Therefore, even though *B*'s request for enrollment coincides with an open enrollment period, *B*'s coverage is required to be made effective no later than December 1 (rather than the plan's January 1 effective date for late enrollees).

[69 FR 78763, Dec. 30, 2004, as amended at 79 FR 10309, Feb. 24, 2014]

§ 2590.701–7 HMO affiliation period as an alternative to a preexisting condition exclusion.

The rules for HMO affiliation periods have been superseded by the prohibition on preexisting condition exclusions. *See* § 2590.715–2704 for rules prohibiting the imposition of a preexisting condition exclusion.

[79 FR 10309, Feb. 24, 2014]

§ 2590.701–8 Interaction With the Family and Medical Leave Act. [Reserved]

§ 2590.702 Prohibiting discrimination against participants and beneficiaries based on a health factor.'

(a) *Health factors.* (1) The term *health factor* means, in relation to an individual, any of the following health status-related factors:

(i) Health status;

(ii) Medical condition (including both physical and mental illnesses), as defined in § 2590.701–2;

(iii) Claims experience;

(iv) Receipt of health care;

(v) Medical history;

(vi) Genetic information, as defined in § 2590.702–1(a)(3) of this Part.

(vii) Evidence of insurability; or

(viii) Disability.

(2) Evidence of insurability includes—

(i) Conditions arising out of acts of domestic violence; and

(ii) Participation in activities such as motorcycling, snowmobiling, all-terrain vehicle riding, horseback riding, skiing, and other similar activities.

(3) The decision whether health coverage is elected for an individual (including the time chosen to enroll, such as under special enrollment or late enrollment) is not, itself, within the scope of any health factor. (However, under § 2590.701–6, a plan or issuer must treat special enrollees the same as similarly situated individuals who are enrolled when first eligible.)

(b) *Prohibited discrimination in rules for eligibility*—(1) *In general*—(i) A group health plan, and a health insurance issuer offering health insurance coverage in connection with a group health plan, may not establish any rule for eligibility (including continued eligibility) of any individual to enroll for benefits under the terms of the plan or group health insurance coverage that discriminates based on any health factor that relates to that individual or a dependent of that individual. This rule is subject to the provisions of paragraph (b)(2) of this section (explaining how this rule applies to benefits), paragraph (d) of this section (containing rules for establishing groups of similarly situated individuals), paragraph (e) of this section (relating to nonconfinement, actively-at-work, and other service requirements), paragraph (f) of this section (relating to wellness programs), and paragraph (g) of this section (permitting favorable treatment of individuals with adverse health factors).

(ii) For purposes of this section, rules for eligibility include, but are not limited to, rules relating to—

(A) Enrollment;

(B) The effective date of coverage;

(C) Waiting (or affiliation) periods;

(D) Late and special enrollment;

(E) Eligibility for benefit packages (including rules for individuals to change their selection among benefit packages);

(F) Benefits (including rules relating to covered benefits, benefit restrictions, and cost-sharing mechanisms such as coinsurance, copayments, and deductibles), as described in paragraphs (b)(2) and (3) of this section;

(G) Continued eligibility; and

(H) Terminating coverage (including disenrollment) of any individual under the plan.

(iii) The rules of this paragraph (b)(1) are illustrated by the following examples:

Example 1. (i) *Facts.* An employer sponsors a group health plan that is available to all employees who enroll within the first 30 days of their employment. However, employees who do not enroll within the first 30 days cannot enroll later unless they pass a physical examination.

(ii) *Conclusion.* In this *Example 1*, the requirement to pass a physical examination in order to enroll in the plan is a rule for eligibility that discriminates based on one or more health factors and thus violates this paragraph (b)(1).

Example 2. (i) *Facts.* Under an employer's group health plan, employees who enroll during the first 30 days of employment (and during special enrollment periods) may choose between two benefit packages: an indemnity option and an HMO option. However, employees who enroll during late enrollment are permitted to enroll only in the HMO option and only if they provide evidence of good health.

(ii) *Conclusion.* In this *Example 2*, the requirement to provide evidence of good health in order to be eligible for late enrollment in the HMO option is a rule for eligibility that discriminates based on one or more health factors and thus violates this paragraph (b)(1). However, if the plan did not require evidence of good health but limited late enrollees to the HMO option, the plan's rules for eligibility would not discriminate based on any health factor, and thus would not violate this paragraph (b)(1), because the time an individual chooses to enroll is not, itself, within the scope of any health factor.

Example 3. (i) *Facts.* Under an employer's group health plan, all employees generally may enroll within the first 30 days of employment. However, individuals who participate in certain recreational activities, including motorcycling, are excluded from coverage.

(ii) *Conclusion.* In this *Example 3*, excluding from the plan individuals who participate in recreational activities, such as motorcycling, is a rule for eligibility that discriminates based on one more health factors and thus violates this paragraph (b)(1).

Example 4. (i) *Facts.* A group health plan applies for a group health policy offered by an issuer. As part of the application, the issuer receives health information about individuals to be covered under the plan. Individual *A* is an employee of the employer maintaining the plan. *A* and *A*'s dependents have a history of high health claims. Based on the information about *A* and *A*'s dependents, the issuer excludes *A* and *A*'s dependents from the group policy it offers to the employer.

(ii) *Conclusion.* In this *Example 4*, the issuer's exclusion of *A* and *A*'s dependents from coverage is a rule for eligibility that discriminates based on one or more health factors, and thus violates this paragraph (b)(1). (If the employer is a small employer under 45 CFR 144.103 (generally, an employer with 50 or fewer employees), the issuer also may violate 45 CFR 146.150, which requires issuers to offer all the policies they sell in the small group market on a guaranteed available basis to all small employers and to accept every eligible individual in every small employer group.) If the plan provides coverage through this policy and does not provide equivalent coverage for *A* and *A*'s dependents through other means, the plan will also violate this paragraph (b)(1).

(2) *Application to benefits*—(i) *General rule*—(A) Under this section, a group health plan or group health insurance issuer is not required to provide coverage for any particular benefit to any group of similarly situated individuals.

(B) However, benefits provided under a plan must be uniformly available to all similarly situated individuals (as described in paragraph (d) of this section). Likewise, any restriction on a benefit or benefits must apply uniformly to all similarly situated individuals and must not be directed at individual participants or beneficiaries based on any health factor of the participants or beneficiaries (determined based on all the relevant facts and circumstances). Thus, for example, a plan may limit or exclude benefits in relation to a specific disease or condition, limit or exclude benefits for certain types of treatments or drugs, or limit or exclude benefits based on a determination of whether the benefits are

experimental or not medically necessary, but only if the benefit limitation or exclusion applies uniformly to all similarly situated individuals and is not directed at individual participants or beneficiaries based on any health factor of the participants or beneficiaries. In addition, a plan or issuer may require the satisfaction of a deductible, copayment, coinsurance, or other cost-sharing requirement in order to obtain a benefit if the limit or cost-sharing requirement applies uniformly to all similarly situated individuals and is not directed at individual participants or beneficiaries based on any health factor of the participants or beneficiaries. In the case of a cost-sharing requirement, see also paragraph (b)(2)(ii) of this section, which permits variances in the application of a cost-sharing mechanism made available under a wellness program. (Whether any plan provision or practice with respect to benefits complies with this paragraph (b)(2)(i) does not affect whether the provision or practice is permitted under ERISA, the Affordable Care Act (including the requirements related to essential health benefits), the Americans with Disabilities Act, or any other law, whether State or Federal.)

(C) For purposes of this paragraph (b)(2)(i), a plan amendment applicable to all individuals in one or more groups of similarly situated individuals under the plan and made effective no earlier than the first day of the first plan year after the amendment is adopted is not considered to be directed at any individual participants or beneficiaries.

(D) The rules of this paragraph (b)(2)(i) are illustrated by the following examples:

Example 1. (i) *Facts.* A group health plan applies a $10,000 annual limit on a specific covered benefit that is not an essential health benefit to each participant or beneficiary covered under the plan. The limit is not directed at individual participants or beneficiaries.

(ii) *Conclusion.* In this *Example 1,* the limit does not violate this paragraph (b)(2)(i) because coverage of the specific, non-essential health benefit up to $10,000 is available uniformly to each participant and beneficiary under the plan and because the limit is applied uniformly to all participants and beneficiaries and is not directed at individual participants or beneficiaries.

Example 2. (i) *Facts.* A group health plan has a $500 deductible on all benefits for participants covered under the plan. Participant *B* files a claim for the treatment of AIDS. At the next corporate board meeting of the plan sponsor, the claim is discussed. Shortly thereafter, the plan is modified to impose a $2,000 deductible on benefits for the treatment of AIDS, effective before the beginning of the next plan year.

(ii) *Conclusion.* The facts of this *Example 2* strongly suggest that the plan modification is directed at *B* based on *B*'s claim. Absent outweighing evidence to the contrary, the plan violates this paragraph (b)(2)(i).

Example 3. (i) *Facts.* A group health plan applies for a group health policy offered by an issuer. Individual *C* is covered under the plan and has an adverse health condition. As part of the application, the issuer receives health information about the individuals to be covered, including information about *C*'s adverse health condition. The policy form offered by the issuer generally provides benefits for the adverse health condition that *C* has, but in this case the issuer offers the plan a policy modified by a rider that excludes benefits for *C* for that condition. The exclusionary rider is made effective the first day of the next plan year.

(ii) *Conclusion.* In this *Example 3*, the issuer violates this paragraph (b)(2)(i) because benefits for *C*'s condition are available to other individuals in the group of similarly situated individuals that includes *C* but are not available to *C*. Thus, the benefits are not uniformly available to all similarly situated individuals. Even though the exclusionary rider is made effective the first day of the next plan year, because the rider does not apply to all similarly situated individuals, the issuer violates this paragraph (b)(2)(i).

Example 4. (i) *Facts.* A group health plan has a $2,000 lifetime limit for the treatment of temporomandibular joint syndrome (TMJ). The limit is applied uniformly to all similarly situated individuals and is not directed at individual participants or beneficiaries.

(ii) *Conclusion.* In this *Example 4,* the limit does not violate this paragraph (b)(2)(i) because $2,000 of benefits for the treatment of TMJ are available uniformly to all similarly situated individuals and a plan may limit benefits covered in relation to a specific disease or condition if the limit applies uniformly to all similarly situated individuals and is not directed at individual participants or beneficiaries. (However, applying a lifetime limit on TMJ may violate § 2590.715–2711, if TMJ coverage is an essential health

benefit, depending on the essential health benefits benchmark plan as defined in 45 CFR 156.20. This example does not address whether the plan provision is permissible under any other applicable law, including PHS Act section 2711 or the Americans with Disabilities Act.)

Example 5. (i) *Facts.* A group health plan applies a $2 million lifetime limit on all benefits. However, the $2 million lifetime limit is reduced to $10,000 for any participant or beneficiary covered under the plan who has a congenital heart defect.

(ii) *Conclusion.* In this *Example 5,* the lower lifetime limit for participants and beneficiaries with a congenital heart defect violates this paragraph (b)(2)(i) because benefits under the plan are not uniformly available to all similarly situated individuals and the plan's lifetime limit on benefits does not apply uniformly to all similarly situated individuals. Additionally, this plan provision is prohibited under § 2590.715–2711 because it imposes a lifetime limit on essential health benefits.

Example 6. (i) *Facts.* A group health plan limits benefits for prescription drugs to those listed on a drug formulary. The limit is applied uniformly to all similarly situated individuals and is not directed at individual participants or beneficiaries.

(ii) *Conclusion.* In this *Example 6*, the exclusion from coverage of drugs not listed on the drug formulary does not violate this paragraph (b)(2)(i) because benefits for prescription drugs listed on the formulary are uniformly available to all similarly situated individuals and because the exclusion of drugs not listed on the formulary applies uniformly to all similarly situated individuals and is not directed at individual participants or beneficiaries.

Example 7. (i) *Facts.* Under a group health plan, doctor visits are generally subject to a $250 annual deductible and 20 percent coinsurance requirement. However, prenatal doctor visits are not subject to any deductible or coinsurance requirement. These rules are applied uniformly to all similarly situated individuals and are not directed at individual participants or beneficiaries.

(ii) *Conclusion.* In this *Example 7*, imposing different deductible and coinsurance requirements for prenatal doctor visits and other visits does not violate this paragraph (b)(2)(i) because a plan may establish different deductibles or coinsurance requirements for different services if the deductible or coinsurance requirement is applied uniformly to all similarly situated individuals and is not directed at individual participants or beneficiaries.

(ii) *Exception for wellness programs.* A group health plan or group health insurance issuer may vary benefits, including cost-sharing mechanisms (such as a deductible, copayment, or coinsurance), based on whether an individual has met the standards of a wellness program that satisfies the requirements of paragraph (f) of this section.

(iii) *Specific rule relating to source-of-injury exclusions*—(A) If a group health plan or group health insurance coverage generally provides benefits for a type of injury, the plan or issuer may not deny benefits otherwise provided for treatment of the injury if the injury results from an act of domestic violence or a medical condition (including both physical and mental health conditions). This rule applies in the case of an injury resulting from a medical condition even if the condition is not diagnosed before the injury.

(B) The rules of this paragraph (b)(2)(iii) are illustrated by the following examples:

Example 1. (i) *Facts.* A group health plan generally provides medical/surgical benefits, including benefits for hospital stays, that are medically necessary. However, the plan excludes benefits for self-inflicted injuries or injuries sustained in connection with attempted suicide. Because of depression, Individual *D* attempts suicide. As a result, *D* sustains injuries and is hospitalized for treatment of the injuries. Under the exclusion, the plan denies *D* benefits for treatment of the injuries.

(ii) *Conclusion.* In this *Example 1*, the suicide attempt is the result of a medical condition (depression). Accordingly, the denial of benefits for the treatments of *D*'s injuries violates the requirements of this paragraph (b)(2)(iii) because the plan provision excludes benefits for treatment of an injury resulting from a medical condition.

Example 2. (i) *Facts.* A group health plan provides benefits for head injuries generally. The plan also has a general exclusion for any injury sustained while participating in any of a number of recreational activities, including bungee jumping. However, this exclusion does not apply to any injury that results from a medical condition (nor from domestic violence). Participant *E* sustains a head injury while bungee jumping. The injury did not result from a medical condition (nor from domestic violence). Accordingly, the plan denies benefits for *E*'s head injury.

(ii) *Conclusion.* In this *Example 2*, the plan provision that denies benefits based on the source of an injury does not restrict benefits based on an act of domestic violence or any medical condition. Therefore, the provision

is permissible under this paragraph (b)(2)(iii) and does not violate this section. (However, if the plan did not allow *E* to enroll in the plan (or applied different rules for eligibility to *E*) because *E* frequently participates in bungee jumping, the plan would violate paragraph (b)(1) of this section.)

(c) *Prohibited discrimination in premiums or contributions*—(1) *In general*—(i) A group health plan, and a health insurance issuer offering health insurance coverage in connection with a group health plan, may not require an individual, as a condition of enrollment or continued enrollment under the plan or group health insurance coverage, to pay a premium or contribution that is greater than the premium or contribution for a similarly situated individual (described in paragraph (d) of this section) enrolled in the plan or group health insurance coverage based on any health factor that relates to the individual or a dependent of the individual.

(ii) Discounts, rebates, payments in kind, and any other premium differential mechanisms are taken into account in determining an individual's premium or contribution rate. (For rules relating to cost-sharing mechanisms, see paragraph (b)(2) of this section (addressing benefits).)

(2) *Rules relating to premium rates*—(i) *Group rating based on health factors not restricted under this section.* Nothing in this section restricts the aggregate amount that an employer may be charged for coverage under a group health plan. But *see* § 2590.702–1(b) of this Part, which prohibits adjustments in group premium or contribution rates based on genetic information.

(ii) *List billing based on a health factor prohibited.* However, a group health insurance issuer, or a group health plan, may not quote or charge an employer (or an individual) a different premium for an individual in a group of similarly situated individuals based on a health factor. (But see paragraph (g) of this section permitting favorable treatment of individuals with adverse health factors.)

(iii) *Examples.* The rules of this paragraph (c)(2) are illustrated by the following examples:

Example 1. (i) *Facts.* An employer sponsors a group health plan and purchases coverage from a health insurance issuer. In order to determine the premium rate for the upcoming plan year, the issuer reviews the claims experience of individuals covered under the plan. The issuer finds that Individual *F* had significantly higher claims experience than similarly situated individuals in the plan. The issuer quotes the plan a higher per-participant rate because of *F*'s claims experience.

(ii) *Conclusion.* In this *Example 1*, the issuer does not violate the provisions of this paragraph (c)(2) because the issuer blends the rate so that the employer is not quoted a higher rate for *F* than for a similarly situated individual based on *F*'s claims experience. (However, if the issuer used genetic information in computing the group rate, it would violate § 2590.702–1(b) of this Part.)

(3) *Exception for wellness programs.* Notwithstanding paragraphs (c)(1) and (2) of this section, a plan or issuer may vary the amount of premium or contribution it requires similarly situated individuals to pay based on whether an individual has met the standards of a wellness program that satisfies the requirements of paragraph (f) of this section.

(d) *Similarly situated individuals.* The requirements of this section apply only within a group of individuals who are treated as similarly situated individuals. A plan or issuer may treat participants as a group of similarly situated individuals separate from beneficiaries. In addition, participants may be treated as two or more distinct groups of similarly situated individuals and beneficiaries may be treated as two or more distinct groups of similarly situated individuals in accordance with the rules of this paragraph (d). Moreover, if individuals have a choice of two or more benefit packages, individuals choosing one benefit package may be treated as one or more groups of similarly situated individuals distinct from individuals choosing another benefit package.

(1) *Participants.* Subject to paragraph (d)(3) of this section, a plan or issuer may treat participants as two or more distinct groups of similarly situated individuals if the distinction between or among the groups of participants is based on a bona fide employment-based classification consistent with the employer's usual business practice. Whether an employment-based classification is bona fide is determined on

the basis of all the relevant facts and circumstances. Relevant facts and circumstances include whether the employer uses the classification for purposes independent of qualification for health coverage (for example, determining eligibility for other employee benefits or determining other terms of employment). Subject to paragraph (d)(3) of this section, examples of classifications that, based on all the relevant facts and circumstances, may be bona fide include full-time versus part-time status, different geographic location, membership in a collective bargaining unit, date of hire, length of service, current employee versus former employee status, and different occupations. However, a classification based on any health factor is not a bona fide employment-based classification, unless the requirements of paragraph (g) of this section are satisfied (permitting favorable treatment of individuals with adverse health factors).

(2) *Beneficiaries*—(i) Subject to paragraph (d)(3) of this section, a plan or issuer may treat beneficiaries as two or more distinct groups of similarly situated individuals if the distinction between or among the groups of beneficiaries is based on any of the following factors:

(A) A bona fide employment-based classification of the participant through whom the beneficiary is receiving coverage;

(B) Relationship to the participant (for example, as a spouse or as a dependent child);

(C) Marital status;

(D) With respect to children of a participant, age or student status; or

(E) Any other factor if the factor is not a health factor.

(ii) Paragraph (d)(2)(i) of this section does not prevent more favorable treatment of individuals with adverse health factors in accordance with paragraph (g) of this section.

(3) *Discrimination directed at individuals*. Notwithstanding paragraphs (d)(1) and (2) of this section, if the creation or modification of an employment or coverage classification is directed at individual participants or beneficiaries based on any health factor of the participants or beneficiaries, the classification is not permitted under this paragraph (d), unless it is permitted under paragraph (g) of this section (permitting favorable treatment of individuals with adverse health factors). Thus, if an employer modified an employment-based classification to single out, based on a health factor, individual participants and beneficiaries and deny them health coverage, the new classification would not be permitted under this section.

(4) *Examples*. The rules of this paragraph (d) are illustrated by the following examples:

Example 1. (i) *Facts*. An employer sponsors a group health plan for full-time employees only. Under the plan (consistent with the employer's usual business practice), employees who normally work at least 30 hours per week are considered to be working full-time. Other employees are considered to be working part-time. There is no evidence to suggest that the classification is directed at individual participants or beneficiaries.

(ii) *Conclusion*. In this *Example 1*, treating the full-time and part-time employees as two separate groups of similarly situated individuals is permitted under this paragraph (d) because the classification is bona fide and is not directed at individual participants or beneficiaries.

Example 2. (i) *Facts*. Under a group health plan, coverage is made available to employees, their spouses, and their children. However, coverage is made available to a child only if the child is under age 26 (or under age 29 if the child is continuously enrolled full-time in an institution of higher learning (full-time students)). There is no evidence to suggest that these classifications are directed at individual participants or beneficiaries.

(ii) *Conclusion*. In this Example 2, treating spouses and children differently by imposing an age limitation on children, but not on spouses, is permitted under this paragraph (d). Specifically, the distinction between spouses and children is permitted under paragraph (d)(2) of this section and is not prohibited under paragraph (d)(3) of this section because it is not directed at individual participants or beneficiaries. It is also permissible to treat children who are under age 26 (or full-time students under age 29) as a group of similarly situated individuals separate from those who are age 26 or older (or age 29 or older if they are not full-time students) because the classification is permitted under paragraph (d)(2) of this section and is not directed at individual participants or beneficiaries.

Example 3. (i) *Facts.* A university sponsors a group health plan that provides one health benefit package to faculty and another health benefit package to other staff. Faculty and staff are treated differently with respect to other employee benefits such as retirement benefits and leaves of absence. There is no evidence to suggest that the distinction is directed at individual participants or beneficiaries.

(ii) *Conclusion.* In this *Example 3,* the classification is permitted under this paragraph (d) because there is a distinction based on a bona fide employment-based classification consistent with the employer's usual business practice and the distinction is not directed at individual participants and beneficiaries.

Example 4. (i) *Facts.* An employer sponsors a group health plan that is available to all current employees. Former employees may also be eligible, but only if they complete a specified number of years of service, are enrolled under the plan at the time of termination of employment, and are continuously enrolled from that date. There is no evidence to suggest that these distinctions are directed at individual participants or beneficiaries.

(ii) *Conclusion.* In this *Example 4,* imposing additional eligibility requirements on former employees is permitted because a classification that distinguishes between current and former employees is a bona fide employment-based classification that is permitted under this paragraph (d), provided that it is not directed at individual participants or beneficiaries. In addition, it is permissible to distinguish between former employees who satisfy the service requirement and those who do not, provided that the distinction is not directed at individual participants or beneficiaries. (However, former employees who do not satisfy the eligibility criteria may, nonetheless, be eligible for continued coverage pursuant to a COBRA continuation provision or similar State law.)

Example 5. (i) *Facts.* An employer sponsors a group health plan that provides the same benefit package to all seven employees of the employer. Six of the seven employees have the same job title and responsibilities, but Employee *G* has a different job title and different responsibilities. After *G* files an expensive claim for benefits under the plan, coverage under the plan is modified so that employees with *G*'s job title receive a different benefit package that includes a higher deductible than in the benefit package made available to the other six employees.

(ii) *Conclusion.* Under the facts of this *Example 5,* changing the coverage classification for *G* based on the existing employment classification for *G* is not permitted under this paragraph (d) because the creation of the new coverage classification for *G* is directed at *G* based on one or more health factors.

(e) *Nonconfinement and actively-at-work provisions*—(1) *Nonconfinement provisions*—(i) *General rule.* Under the rules of paragraphs (b) and (c) of this section, a plan or issuer may not establish a rule for eligibility (as described in paragraph (b)(1)(ii) of this section) or set any individual's premium or contribution rate based on whether an individual is confined to a hospital or other health care institution. In addition, under the rules of paragraphs (b) and (c) of this section, a plan or issuer may not establish a rule for eligibility or set any individual's premium or contribution rate based on an individual's ability to engage in normal life activities, except to the extent permitted under paragraphs (e)(2)(ii) and (3) of this section (permitting plans and issuers, under certain circumstances, to distinguish among employees based on the performance of services).

(ii) *Examples.* The rules of this paragraph (e)(1) are illustrated by the following examples:

Example 1. (i) *Facts.* Under a group health plan, coverage for employees and their dependents generally becomes effective on the first day of employment. However, coverage for a dependent who is confined to a hospital or other health care institution does not become effective until the confinement ends.

(ii) *Conclusion.* In this *Example 1,* the plan violates this paragraph (e)(1) because the plan delays the effective date of coverage for dependents based on confinement to a hospital or other health care institution.

Example 2. (i) *Facts.* In previous years, a group health plan has provided coverage through a group health insurance policy offered by Issuer *M.* However, for the current year, the plan provides coverage through a group health insurance policy offered by Issuer *N.* Under Issuer *N*'s policy, items and services provided in connection with the confinement of a dependent to a hospital or other health care institution are not covered if the confinement is covered under an extension of benefits clause from a previous health insurance issuer.

(ii) *Conclusion.* In this *Example 2,* Issuer *N* violates this paragraph (e)(1) because the group health insurance coverage restricts benefits (a rule for eligibility under paragraph (b)(1)) based on whether a dependent is confined to a hospital or other health care institution that is covered under an extension of benefits clause from a previous issuer. State law cannot change the obligation of Issuer *N* under this section. However,

under State law Issuer *M* may also be responsible for providing benefits to such a dependent. In a case in which Issuer *N* has an obligation under this section to provide benefits and Issuer *M* has an obligation under State law to provide benefits, any State laws designed to prevent more than 100% reimbursement, such as State coordination-of-benefits laws, continue to apply.

(2) *Actively-at-work and continuous service provisions*—(i) *General rule*—(A) Under the rules of paragraphs (b) and (c) of this section and subject to the exception for the first day of work described in paragraph (e)(2)(ii) of this section, a plan or issuer may not establish a rule for eligibility (as described in paragraph (b)(1)(ii) of this section) or set any individual's premium or contribution rate based on whether an individual is actively at work (including whether an individual is continuously employed), unless absence from work due to any health factor (such as being absent from work on sick leave) is treated, for purposes of the plan or health insurance coverage, as being actively at work.

(B) The rules of this paragraph (e)(2)(i) are illustrated by the following examples:

Example 1. (i) *Facts.* Under a group health plan, an employee generally becomes eligible to enroll 30 days after the first day of employment. However, if the employee is not actively at work on the first day after the end of the 30-day period, then eligibility for enrollment is delayed until the first day the employee is actively at work.

(ii) *Conclusion.* In this *Example 1,* the plan violates this paragraph (e)(2) (and thus also violates paragraph (b) of this section). However, the plan would not violate paragraph (e)(2) or (b) of this section if, under the plan, an absence due to any health factor is considered being actively at work.

Example 2. (i) *Facts.* Under a group health plan, coverage for an employee becomes effective after 90 days of continuous service; that is, if an employee is absent from work (for any reason) before completing 90 days of service, the beginning of the 90-day period is measured from the day the employee returns to work (without any credit for service before the absence).

(ii) *Conclusion.* In this Example 2, the plan violates this paragraph (e)(2) (and thus also paragraph (b) of this section) because the 90-day continuous service requirement is a rule for eligibility based on whether an individual is actively at work. However, the plan would not violate this paragraph (e)(2) or paragraph (b) of this section if, under the plan, an absence due to any health factor is not considered an absence for purposes of measuring 90 days of continuous service. (In addition, any eligibility provision that is time-based must comply with the requirements of PHS Act section 2708 and its implementing regulations.)

(ii) *Exception for the first day of work*—(A) Notwithstanding the general rule in paragraph (e)(2)(i) of this section, a plan or issuer may establish a rule for eligibility that requires an individual to begin work for the employer sponsoring the plan (or, in the case of a multiemployer plan, to begin a job in covered employment) before coverage becomes effective, provided that such a rule for eligibility applies regardless of the reason for the absence.

(B) The rules of this paragraph (e)(2)(ii) are illustrated by the following examples:

Example 1. (i) *Facts.* Under the eligibility provision of a group health plan, coverage for new employees becomes effective on the first day that the employee reports to work. Individual *H* is scheduled to begin work on August 3. However, *H* is unable to begin work on that day because of illness. *H* begins working on August 4, and *H*'s coverage is effective on August 4.

(ii) *Conclusion.* In this *Example 1,* the plan provision does not violate this section. However, if coverage for individuals who do not report to work on the first day they were scheduled to work for a reason unrelated to a health factor (such as vacation or bereavement) becomes effective on the first day they were scheduled to work, then the plan would violate this section.

Example 2. (i) *Facts.* Under a group health plan, coverage for new employees becomes effective on the first day of the month following the employee's first day of work, regardless of whether the employee is actively at work on the first day of the month. Individual *J* is scheduled to begin work on March 24. However, *J* is unable to begin work on March 24 because of illness. *J* begins working on April 7 and *J*'s coverage is effective May 1.

(ii) *Conclusion.* In this *Example 2,* the plan provision does not violate this section. However, as in *Example 1,* if coverage for individuals absent from work for reasons unrelated to a health factor became effective despite their absence, then the plan would violate this section.

(3) *Relationship to plan provisions defining similarly situated individuals*—(i) Notwithstanding the rules of paragraphs (e)(1) and (2) of this section, a

plan or issuer may establish rules for eligibility or set any individual's premium or contribution rate in accordance with the rules relating to similarly situated individuals in paragraph (d) of this section. Accordingly, a plan or issuer may distinguish in rules for eligibility under the plan between full-time and part-time employees, between permanent and temporary or seasonal employees, between current and former employees, and between employees currently performing services and employees no longer performing services for the employer, subject to paragraph (d) of this section. However, other Federal or State laws (including the COBRA continuation provisions and the Family and Medical Leave Act of 1993) may require an employee or the employee's dependents to be offered coverage and set limits on the premium or contribution rate even though the employee is not performing services.

(ii) The rules of this paragraph (e)(3) are illustrated by the following examples:

Example 1. (i) *Facts.* Under a group health plan, employees are eligible for coverage if they perform services for the employer for 30 or more hours per week or if they are on paid leave (such as vacation, sick, or bereavement leave). Employees on unpaid leave are treated as a separate group of similarly situated individuals in accordance with the rules of paragraph (d) of this section.

(ii) *Conclusion.* In this *Example 1,* the plan provisions do not violate this section. However, if the plan treated individuals performing services for the employer for 30 or more hours per week, individuals on vacation leave, and individuals on bereavement leave as a group of similarly situated individuals separate from individuals on sick leave, the plan would violate this paragraph (e) (and thus also would violate paragraph (b) of this section) because groups of similarly situated individuals cannot be established based on a health factor (including the taking of sick leave) under paragraph (d) of this section.

Example 2. (i) *Facts.* To be eligible for coverage under a bona fide collectively bargained group health plan in the current calendar quarter, the plan requires an individual to have worked 250 hours in covered employment during the three-month period that ends one month before the beginning of the current calendar quarter. The distinction between employees working at least 250 hours and those working less than 250 hours in the earlier three-month period is not directed at individual participants or beneficiaries based on any health factor of the participants or beneficiaries.

(ii) *Conclusion.* In this *Example 2,* the plan provision does not violate this section because, under the rules for similarly situated individuals allowing full-time employees to be treated differently than part-time employees, employees who work at least 250 hours in a three-month period can be treated differently than employees who fail to work 250 hours in that period. The result would be the same if the plan permitted individuals to apply excess hours from previous periods to satisfy the requirement for the current quarter.

Example 3. (i) *Facts.* Under a group health plan, coverage of an employee is terminated when the individual's employment is terminated, in accordance with the rules of paragraph (d) of this section. Employee *B* has been covered under the plan. *B* experiences a disabling illness that prevents *B* from working. *B* takes a leave of absence under the Family and Medical Leave Act of 1993. At the end of such leave, *B* terminates employment and consequently loses coverage under the plan. (This termination of coverage is without regard to whatever rights the employee (or members of the employee's family) may have for COBRA continuation coverage.)

(ii) *Conclusion.* In this *Example 3,* the plan provision terminating *B*'s coverage upon *B*'s termination of employment does not violate this section.

Example 4. (i) *Facts.* Under a group health plan, coverage of an employee is terminated when the employee ceases to perform services for the employer sponsoring the plan, in accordance with the rules of paragraph (d) of this section. Employee *C* is laid off for three months. When the layoff begins, *C*'s coverage under the plan is terminated. (This termination of coverage is without regard to whatever rights the employee (or members of the employee's family) may have for COBRA continuation coverage.)

(ii) *Conclusion.* In this *Example 4,* the plan provision terminating *C*'s coverage upon the cessation of *C*'s performance of services does not violate this section.

(f) *Nondiscriminatory wellness programs—in general.* A wellness program is a program of health promotion or disease prevention. Paragraphs (b)(2)(ii) and (c)(3) of this section provide exceptions to the general prohibitions against discrimination based on a health factor for plan provisions that vary benefits (including cost-sharing mechanisms) or the premium or contribution for similarly situated individuals in connection with a wellness program that satisfies the requirements of this paragraph (f).

(1) *Definitions.* The definitions in this paragraph (f)(1) govern in applying the provisions of this paragraph (f).

(i) *Reward.* Except where expressly provided otherwise, references in this section to an individual obtaining a reward include both obtaining a reward (such as a discount or rebate of a premium or contribution, a waiver of all or part of a cost-sharing mechanism, an additional benefit, or any financial or other incentive) and avoiding a penalty (such as the absence of a premium surcharge or other financial or nonfinancial disincentive). References in this section to a plan providing a reward include both providing a reward (such as a discount or rebate of a premium or contribution, a waiver of all or part of a cost-sharing mechanism, an additional benefit, or any financial or other incentive) and imposing a penalty (such as a surcharge or other financial or nonfinancial disincentive).

(ii) *Participatory wellness programs.* If none of the conditions for obtaining a reward under a wellness program is based on an individual satisfying a standard that is related to a health factor (or if a wellness program does not provide a reward), the wellness program is a participatory wellness program. Examples of participatory wellness programs are:

(A) A program that reimburses employees for all or part of the cost for membership in a fitness center.

(B) A diagnostic testing program that provides a reward for participation in that program and does not base any part of the reward on outcomes.

(C) A program that encourages preventive care through the waiver of the copayment or deductible requirement under a group health plan for the costs of, for example, prenatal care or well-baby visits. (Note that, with respect to non-grandfathered plans, § 2590.715–2713 of this part requires benefits for certain preventive health services without the imposition of cost sharing.)

(D) A program that reimburses employees for the costs of participating, or that otherwise provides a reward for participating, in a smoking cessation program without regard to whether the employee quits smoking.

(E) A program that provides a reward to employees for attending a monthly, no-cost health education seminar.

(F) A program that provides a reward to employees who complete a health risk assessment regarding current health status, without any further action (educational or otherwise) required by the employee with regard to the health issues identified as part of the assessment. (*See also* § 2590.702–1 for rules prohibiting collection of genetic information.)

(iii) *Health-contingent wellness programs.* A health-contingent wellness program is a program that requires an individual to satisfy a standard related to a health factor to obtain a reward (or requires an individual to undertake more than a similarly situated individual based on a health factor in order to obtain the same reward). A health-contingent wellness program may be an activity-only wellness program or an outcome-based wellness program.

(iv) *Activity-only wellness programs.* An activity-only wellness program is a type of health-contingent wellness program that requires an individual to perform or complete an activity related to a health factor in order to obtain a reward but does not require the individual to attain or maintain a specific health outcome. Examples include walking, diet, or exercise programs, which some individuals may be unable to participate in or complete (or have difficulty participating in or completing) due to a health factor, such as severe asthma, pregnancy, or a recent surgery. *See* paragraph (f)(3) of this section for requirements applicable to activity-only wellness programs.

(v) *Outcome-based wellness programs.* An outcome-based wellness program is a type of health-contingent wellness program that requires an individual to attain or maintain a specific health outcome (such as not smoking or attaining certain results on biometric screenings) in order to obtain a reward. To comply with the rules of this paragraph (f), an outcome-based wellness program typically has two tiers. That is, for individuals who do not attain or maintain the specific health outcome, compliance with an educational program or an activity may be offered as

an alternative to achieve the same reward. This alternative pathway, however, does not mean that the overall program, which has an outcome-based component, is not an outcome-based wellness program. That is, if a measurement, test, or screening is used as part of an initial standard and individuals who meet the standard are granted the reward, the program is considered an outcome-based wellness program. For example, if a wellness program tests individuals for specified medical conditions or risk factors (including biometric screening such as testing for high cholesterol, high blood pressure, abnormal body mass index, or high glucose level) and provides a reward to individuals identified as within a normal or healthy range for these medical conditions or risk factors, while requiring individuals who are identified as outside the normal or healthy range (or at risk) to take additional steps (such as meeting with a health coach, taking a health or fitness course, adhering to a health improvement action plan, complying with a walking or exercise program, or complying with a health care provider's plan of care) to obtain the same reward, the program is an outcome-based wellness program. *See* paragraph (f)(4) of this section for requirements applicable to outcome-based wellness programs.

(2) *Requirement for participatory wellness programs.* A participatory wellness program, as described in paragraph (f)(1)(ii) of this section, does not violate the provisions of this section only if participation in the program is made available to all similarly situated individuals, regardless of health status.

(3) *Requirements for activity-only wellness programs.* A health-contingent wellness program that is an activity-only wellness program, as described in paragraph (f)(1)(iv) of this section, does not violate the provisions of this section only if all of the following requirements are satisfied:

(i) *Frequency of opportunity to qualify.* The program must give individuals eligible for the program the opportunity to qualify for the reward under the program at least once per year.

(ii) *Size of reward.* The reward for the activity-only wellness program, together with the reward for other health-contingent wellness programs with respect to the plan, must not exceed the applicable percentage (as defined in paragraph (f)(5) of this section) of the total cost of employee-only coverage under the plan. However, if, in addition to employees, any class of dependents (such as spouses, or spouses and dependent children) may participate in the wellness program, the reward must not exceed the applicable percentage of the total cost of the coverage in which an employee and any dependents are enrolled. For purposes of this paragraph (f)(3)(ii), the cost of coverage is determined based on the total amount of employer and employee contributions towards the cost of coverage for the benefit package under which the employee is (or the employee and any dependents are) receiving coverage.

(iii) *Reasonable design.* The program must be reasonably designed to promote health or prevent disease. A program satisfies this standard if it has a reasonable chance of improving the health of, or preventing disease in, participating individuals, and it is not overly burdensome, is not a subterfuge for discriminating based on a health factor, and is not highly suspect in the method chosen to promote health or prevent disease. This determination is based on all the relevant facts and circumstances.

(iv) *Uniform availability and reasonable alternative standards.* The full reward under the activity-only wellness program must be available to all similarly situated individuals.

(A) Under this paragraph (f)(3)(iv), a reward under an activity-only wellness program is not available to all similarly situated individuals for a period unless the program meets both of the following requirements:

(*1*) The program allows a reasonable alternative standard (or waiver of the otherwise applicable standard) for obtaining the reward for any individual for whom, for that period, it is unreasonably difficult due to a medical condition to satisfy the otherwise applicable standard; and

(*2*) The program allows a reasonable alternative standard (or waiver of the otherwise applicable standard) for obtaining the reward for any individual for whom, for that period, it is medically inadvisable to attempt to satisfy the otherwise applicable standard.

(B) While plans and issuers are not required to determine a particular reasonable alternative standard in advance of an individual's request for one, if an individual is described in either paragraph (f)(3)(iv)(A)(*1*) or (*2*) of this section, a reasonable alternative standard must be furnished by the plan or issuer upon the individual's request or the condition for obtaining the reward must be waived.

(C) All the facts and circumstances are taken into account in determining whether a plan or issuer has furnished a reasonable alternative standard, including but not limited to the following:

(*1*) If the reasonable alternative standard is completion of an educational program, the plan or issuer must make the educational program available or assist the employee in finding such a program (instead of requiring an individual to find such a program unassisted), and may not require an individual to pay for the cost of the program.

(*2*) The time commitment required must be reasonable (for example, requiring attendance nightly at a one-hour class would be unreasonable).

(*3*) If the reasonable alternative standard is a diet program, the plan or issuer is not required to pay for the cost of food but must pay any membership or participation fee.

(*4*) If an individual's personal physician states that a plan standard (including, if applicable, the recommendations of the plan's medical professional) is not medically appropriate for that individual, the plan or issuer must provide a reasonable alternative standard that accommodates the recommendations of the individual's personal physician with regard to medical appropriateness. Plans and issuers may impose standard cost sharing under the plan or coverage for medical items and services furnished pursuant to the physician's recommendations.

(D) To the extent that a reasonable alternative standard under an activity-only wellness program is, itself, an activity-only wellness program, it must comply with the requirements of this paragraph (f)(3) in the same manner as if it were an initial program standard. (Thus, for example, if a plan or issuer provides a walking program as a reasonable alternative standard to a running program, individuals for whom it is unreasonably difficult due to a medical condition to complete the walking program (or for whom it is medically inadvisable to attempt to complete the walking program) must be provided a reasonable alternative standard to the walking program.) To the extent that a reasonable alternative standard under an activity-only wellness program is, itself, an outcome-based wellness program, it must comply with the requirements of paragraph (f)(4) of this section, including paragraph (f)(4)(iv)(D).

(E) If reasonable under the circumstances, a plan or issuer may seek verification, such as a statement from an individual's personal physician, that a health factor makes it unreasonably difficult for the individual to satisfy, or medically inadvisable for the individual to attempt to satisfy, the otherwise applicable standard of an activity-only wellness program. Plans and issuers may seek verification with respect to requests for a reasonable alternative standard for which it is reasonable to determine that medical judgment is required to evaluate the validity of the request.

(v) *Notice of availability of reasonable alternative standard.* The plan or issuer must disclose in all plan materials describing the terms of an activity-only wellness program the availability of a reasonable alternative standard to qualify for the reward (and, if applicable, the possibility of waiver of the otherwise applicable standard), including contact information for obtaining a reasonable alternative standard and a statement that recommendations of an individual's personal physician will be accommodated. If plan materials merely mention that such a program is available, without describing its terms, this disclosure is not required. Sample language is provided in paragraph (f)(6)

of this section, as well as in certain examples of this section.

(vi) *Example.* The provisions of this paragraph (f)(3) are illustrated by the following example:

Example. (i) *Facts.* A group health plan provides a reward to individuals who participate in a reasonable specified walking program. If it is unreasonably difficult due to a medical condition for an individual to participate (or if it is medically inadvisable for an individual to attempt to participate), the plan will waive the walking program requirement and provide the reward. All materials describing the terms of the walking program disclose the availability of the waiver.

(ii) *Conclusion.* In this *Example*, the program satisfies the requirements of paragraph (f)(3)(iii) of this section because the walking program is reasonably designed to promote health and prevent disease. The program satisfies the requirements of paragraph (f)(3)(iv) of this section because the reward under the program is available to all similarly situated individuals. It accommodates individuals for whom it is unreasonably difficult to participate in the walking program due to a medical condition (or for whom it would be medically inadvisable to attempt to participate) by providing them with the reward even if they do not participate in the walking program (that is, by waiving the condition). The plan also complies with the disclosure requirement of paragraph (f)(3)(v) of this section. Thus, the plan satisfies paragraphs (f)(3)(iii), (iv), and (v) of this section.

(4) *Requirements for outcome-based wellness programs.* A health-contingent wellness program that is an outcome-based wellness program, as described in paragraph (f)(1)(v) of this section, does not violate the provisions of this section only if all of the following requirements are satisfied:

(i) *Frequency of opportunity to qualify.* The program must give individuals eligible for the program the opportunity to qualify for the reward under the program at least once per year.

(ii) *Size of reward.* The reward for the outcome-based wellness program, together with the reward for other health-contingent wellness programs with respect to the plan, must not exceed the applicable percentage (as defined in paragraph (f)(5) of this section) of the total cost of employee-only coverage under the plan. However, if, in addition to employees, any class of dependents (such as spouses, or spouses and dependent children) may participate in the wellness program, the reward must not exceed the applicable percentage of the total cost of the coverage in which an employee and any dependents are enrolled. For purposes of this paragraph (f)(4)(ii), the cost of coverage is determined based on the total amount of employer and employee contributions towards the cost of coverage for the benefit package under which the employee is (or the employee and any dependents are) receiving coverage.

(iii) *Reasonable design.* The program must be reasonably designed to promote health or prevent disease. A program satisfies this standard if it has a reasonable chance of improving the health of, or preventing disease in, participating individuals, and it is not overly burdensome, is not a subterfuge for discriminating based on a health factor, and is not highly suspect in the method chosen to promote health or prevent disease. This determination is based on all the relevant facts and circumstances. To ensure that an outcome-based wellness program is reasonably designed to improve health and does not act as a subterfuge for underwriting or reducing benefits based on a health factor, a reasonable alternative standard to qualify for the reward must be provided to any individual who does not meet the initial standard based on a measurement, test, or screening that is related to a health factor, as explained in paragraph (f)(4)(iv) of this section.

(iv) *Uniform availability and reasonable alternative standards.* The full reward under the outcome-based wellness program must be available to all similarly situated individuals.

(A) Under this paragraph (f)(4)(iv), a reward under an outcome-based wellness program is not available to all similarly situated individuals for a period unless the program allows a reasonable alternative standard (or waiver of the otherwise applicable standard) for obtaining the reward for any individual who does not meet the initial standard based on the measurement, test, or screening, as described in this paragraph (f)(4)(iv).

(B) While plans and issuers are not required to determine a particular reasonable alternative standard in advance of an individual's request for

one, if an individual is described in paragraph (f)(4)(iv)(A) of this section, a reasonable alternative standard must be furnished by the plan or issuer upon the individual's request or the condition for obtaining the reward must be waived.

(C) All the facts and circumstances are taken into account in determining whether a plan or issuer has furnished a reasonable alternative standard, including but not limited to the following:

(*1*) If the reasonable alternative standard is completion of an educational program, the plan or issuer must make the educational program available or assist the employee in finding such a program (instead of requiring an individual to find such a program unassisted), and may not require an individual to pay for the cost of the program.

(*2*) The time commitment required must be reasonable (for example, requiring attendance nightly at a one-hour class would be unreasonable).

(*3*) If the reasonable alternative standard is a diet program, the plan or issuer is not required to pay for the cost of food but must pay any membership or participation fee.

(*4*) If an individual's personal physician states that a plan standard (including, if applicable, the recommendations of the plan's medical professional) is not medically appropriate for that individual, the plan or issuer must provide a reasonable alternative standard that accommodates the recommendations of the individual's personal physician with regard to medical appropriateness. Plans and issuers may impose standard cost sharing under the plan or coverage for medical items and services furnished pursuant to the physician's recommendations.

(D) To the extent that a reasonable alternative standard under an outcome-based wellness program is, itself, an activity-only wellness program, it must comply with the requirements of paragraph (f)(3) of this section in the same manner as if it were an initial program standard. To the extent that a reasonable alternative standard under an outcome-based wellness program is, itself, another outcome-based wellness program, it must comply with the requirements of this paragraph (f)(4), subject to the following special provisions:

(*1*) The reasonable alternative standard cannot be a requirement to meet a different level of the same standard without additional time to comply that takes into account the individual's circumstances. For example, if the initial standard is to achieve a BMI less than 30, the reasonable alternative standard cannot be to achieve a BMI less than 31 on that same date. However, if the initial standard is to achieve a BMI less than 30, a reasonable alternative standard for the individual could be to reduce the individual's BMI by a small amount or small percentage, over a realistic period of time, such as within a year.

(*2*) An individual must be given the opportunity to comply with the recommendations of the individual's personal physician as a second reasonable alternative standard to meeting the reasonable alternative standard defined by the plan or issuer, but only if the physician joins in the request. The individual can make a request to involve a personal physician's recommendations at any time and the personal physician can adjust the physician's recommendations at any time, consistent with medical appropriateness.

(E) It is not reasonable to seek verification, such as a statement from an individual's personal physician, under an outcome-based wellness program that a health factor makes it unreasonably difficult for the individual to satisfy, or medically inadvisable for the individual to attempt to satisfy, the otherwise applicable standard as a condition of providing a reasonable alternative to the initial standard. However, if a plan or issuer provides an alternative standard to the otherwise applicable measurement, test, or screening that involves an activity that is related to a health factor, then the rules of paragraph (f)(3) of this section for activity-only wellness programs apply to that component of the wellness program and the plan or issuer may, if reasonable under the circumstances, seek verification that it is unreasonably difficult due to a medical condition for an individual to perform or

complete the activity (or it is medically inadvisable to attempt to perform or complete the activity). (For example, if an outcome-based wellness program requires participants to maintain a certain healthy weight and provides a diet and exercise program for individuals who do not meet the targeted weight, a plan or issuer may seek verification, as described in paragraph (f)(3)(iv)(D) of this section, if reasonable under the circumstances, that a second reasonable alternative standard is needed for certain individuals because, for those individuals, it would be unreasonably difficult due to a medical condition to comply, or medically inadvisable to attempt to comply, with the diet and exercise program, due to a medical condition.)

(v) *Notice of availability of reasonable alternative standard.* The plan or issuer must disclose in all plan materials describing the terms of an outcome-based wellness program, and in any disclosure that an individual did not satisfy an initial outcome-based standard, the availability of a reasonable alternative standard to qualify for the reward (and, if applicable, the possibility of waiver of the otherwise applicable standard), including contact information for obtaining a reasonable alternative standard and a statement that recommendations of an individual's personal physician will be accommodated. If plan materials merely mention that such a program is available, without describing its terms, this disclosure is not required. Sample language is provided in paragraph (f)(6) of this section, as well as in certain examples of this section.

(vi) *Examples.* The provisions of this paragraph (f)(4) are illustrated by the following examples:

Example 1—Cholesterol screening with reasonable alternative standard to work with personal physician. (i) *Facts.* A group health plan offers a reward to participants who achieve a count under 200 on a total cholesterol test. If a participant does not achieve the targeted cholesterol count, the plan allows the participant to develop an alternative cholesterol action plan in conjunction with the participant's personal physician that may include recommendations for medication and additional screening. The plan allows the physician to modify the standards, as medically necessary, over the year. (For example, if a participant develops asthma or depression, requires surgery and convalescence, or some other medical condition or consideration makes completion of the original action plan inadvisable or unreasonably difficult, the physician may modify the original action plan.) All plan materials describing the terms of the program include the following statement: ''Your health plan wants to help you take charge of your health. Rewards are available to all employees who participate in our Cholesterol Awareness Wellness Program. If your total cholesterol count is under 200, you will receive the reward. If not, you will still have an opportunity to qualify for the reward. We will work with you and your doctor to find a Health Smart program that is right for you.'' In addition, when any individual participant receives notification that his or her cholesterol count is 200 or higher, the notification includes the following statement: ''Your plan offers a Health Smart program under which we will work with you and your doctor to try to lower your cholesterol. If you complete this program, you will qualify for a reward. Please contact us at [contact information] to get started.''

(ii) *Conclusion.* In this *Example 1,* the program is an outcome-based wellness program because the initial standard requires an individual to attain or maintain a specific health outcome (a certain cholesterol level) to obtain a reward. The program satisfies the requirements of paragraph (f)(4)(iii) of this section because the cholesterol program is reasonably designed to promote health and prevent disease. The program satisfies the requirements of paragraph (f)(4)(iv) of this section because it makes available to all participants who do not meet the cholesterol standard a reasonable alternative standard to qualify for the reward. Lastly, the plan also discloses in all materials describing the terms of the program and in any disclosure that an individual did not satisfy the initial outcome-based standard the availability of a reasonable alternative standard (including contact information and the individual's ability to involve his or her personal physician), as required by paragraph (f)(4)(v) of this section. Thus, the program satisfies the requirements of paragraphs (f)(4)(iii), (iv), and (v) of this section.

Example 2—Cholesterol screening with plan alternative and no opportunity for personal physician involvement. (i) *Facts.* Same facts as *Example 1,* except that the wellness program's physician or nurse practitioner (rather than the individual's personal physician) determines the alternative cholesterol action plan. The plan does not provide an opportunity for a participant's personal physician to modify the action plan if it is not medically appropriate for that individual.

(ii) *Conclusion.* In this *Example 2,* the wellness program does not satisfy the requirements of paragraph (f)(4)(iii) of this section because the program does not accommodate the recommendations of the participant's personal physician with regard to medical appropriateness, as required under paragraph (f)(4)(iv)(C)(*3*) of this section. Thus, the program is not reasonably designed under paragraph (f)(4)(iii) of this section and is not available to all similarly situated individuals under paragraph (f)(4)(iv) of this section. The notice also does not provide all the content required under paragraph (f)(4)(v) of this section.

Example 3—Cholesterol screening with plan alternative that can be modified by personal physician. (i) *Facts.* Same facts as *Example 2,* except that if a participant's personal physician disagrees with any part of the action plan, the personal physician may modify the action plan at any time, and the plan discloses this to participants.

(ii) *Conclusion.* In this *Example 3,* the wellness program satisfies the requirements of paragraph (f)(4)(iii) of this section because the participant's personal physician may modify the action plan determined by the wellness program's physician or nurse practitioner at any time if the physician states that the recommendations are not medically appropriate, as required under paragraph (f)(4)(iv)(C)(*3*) of this section. Thus, the program is reasonably designed under paragraph (f)(4)(iii) of this section and is available to all similarly situated individuals under paragraph (f)(4)(iv) of this section. The notice, which includes a statement that recommendations of an individual's personal physician will be accommodated, also complies with paragraph (f)(4)(v) of this section.

Example 4—BMI screening with walking program alternative. (i) *Facts.* A group health plan will provide a reward to participants who have a body mass index (BMI) that is 26 or lower, determined shortly before the beginning of the year. Any participant who does not meet the target BMI is given the same discount if the participant complies with an exercise program that consists of walking 150 minutes a week. Any participant for whom it is unreasonably difficult due to a medical condition to comply with this walking program (and any participant for whom it is medically inadvisable to attempt to comply with the walking program) during the year is given the same discount if the participant satisfies an alternative standard that is reasonable taking into consideration the participant's medical situation, is not unreasonably burdensome or impractical to comply with, and is otherwise reasonably designed based on all the relevant facts and circumstances. All plan materials describing the terms of the wellness program include the following statement: ''Fitness is Easy! Start Walking! Your health plan cares about your health. If you are considered overweight because you have a BMI of over 26, our Start Walking program will help you lose weight and feel better. We will help you enroll. (**If your doctor says that walking isn't right for you, that's okay too. We will work with you (and, if you wish, your own doctor) to develop a wellness program that is.)'' Participant *E* is unable to achieve a BMI that is 26 or lower within the plan's timeframe and receives notification that complies with paragraph (f)(4)(v) of this section. Nevertheless, it is unreasonably difficult due to a medical condition for *E* to comply with the walking program. *E* proposes a program based on the recommendations of *E*'s physician. The plan agrees to make the same discount available to *E* that is available to other participants in the BMI program or the alternative walking program, but only if *E* actually follows the physician's recommendations.

(ii) *Conclusion.* In this *Example 4,* the program is an outcome-based wellness program because the initial standard requires an individual to attain or maintain a specific health outcome (a certain BMI level) to obtain a reward. The program satisfies the requirements of paragraph (f)(4)(iii) of this section because it is reasonably designed to promote health and prevent disease. The program also satisfies the requirements of paragraph (f)(4)(iv) of this section because it makes available to all individuals who do not satisfy the BMI standard a reasonable alternative standard to qualify for the reward (in this case, a walking program that is not unreasonably burdensome or impractical for individuals to comply with and that is otherwise reasonably designed based on all the relevant facts and circumstances). In addition, the walking program is, itself, an activity-only standard and the plan complies with the requirements of paragraph (f)(3) of this section (including the requirement of paragraph (f)(3)(iv) that, if there are individuals for whom it is unreasonably difficult due to a medical condition to comply, or for whom it is medically inadvisable to attempt to comply, with the walking program, the plan provide a reasonable alternative to those individuals). Moreover, the plan satisfies the requirements of paragraph (f)(4)(v) of this section because it discloses, in all materials describing the terms of the program and in any disclosure that an individual did not satisfy the initial outcome-based standard, the availability of a reasonable alternative standard (including contact information and the individual's option to involve his or her personal physician) to qualify for the reward or the possibility of waiver of the otherwise applicable standard. Thus, the program satisfies the requirements of paragraphs (f)(4)(iii), (iv), and (v) of this section.

Example 5—BMI screening with alternatives available to either lower BMI or meet personal

physician's recommendations. (i) *Facts*. Same facts as *Example 4* except that, with respect to any participant who does not meet the target BMI, instead of a walking program, the participant is expected to reduce BMI by one point. At any point during the year upon request, any individual can obtain a second reasonable alternative standard, which is compliance with the recommendations of the participant's personal physician regarding weight, diet, and exercise as set forth in a treatment plan that the physician recommends or to which the physician agrees. The participant's personal physician is permitted to change or adjust the treatment plan at any time and the option of following the participant's personal physician's recommendations is clearly disclosed.

(ii) *Conclusion*. In this *Example 5*, the reasonable alternative standard to qualify for the reward (the alternative BMI standard requiring a one-point reduction) does not make the program unreasonable under paragraph (f)(4)(iii) or (iv) of this section because the program complies with paragraph (f)(4)(iv)(C)(*4*) of this section by allowing a second reasonable alternative standard to qualify for the reward (compliance with the recommendations of the participant's personal physician, which can be changed or adjusted at any time). Accordingly, the program continues to satisfy the applicable requirements of paragraph (f) of this section.

Example 6—Tobacco use surcharge with smoking cessation program alternative. (i) *Facts*. In conjunction with an annual open enrollment period, a group health plan provides a premium differential based on tobacco use, determined using a health risk assessment. The following statement is included in all plan materials describing the tobacco premium differential: ''Stop smoking today! We can help! If you are a smoker, we offer a smoking cessation program. If you complete the program, you can avoid this surcharge.'' The plan accommodates participants who smoke by facilitating their enrollment in a smoking cessation program that requires participation at a time and place that are not unreasonably burdensome or impractical for participants, and that is otherwise reasonably designed based on all the relevant facts and circumstances, and discloses contact information and the individual's option to involve his or her personal physician. The plan pays for the cost of participation in the smoking cessation program. Any participant can avoid the surcharge for the plan year by participating in the program, regardless of whether the participant stops smoking, but the plan can require a participant who wants to avoid the surcharge in a subsequent year to complete the smoking cessation program again.

(ii) *Conclusion*. In this *Example 6*, the premium differential satisfies the requirements of paragraphs (f)(4)(iii), (iv), and (v). The program is an outcome-based wellness program because the initial standard for obtaining a reward is dependent on the results of a health risk assessment (a measurement, test, or screening). The program is reasonably designed under paragraph (f)(4)(iii) because the plan provides a reasonable alternative standard (as required under paragraph (f)(4)(iv) of this section) to qualify for the reward to all tobacco users (a smoking cessation program). The plan discloses, in all materials describing the terms of the program, the availability of the reasonable alternative standard (including contact information and the individual's option to involve his or her personal physician). Thus, the program satisfies the requirements of paragraphs (f)(4)(iii), (iv), and (v) of this section.

Example 7—Tobacco use surcharge with alternative program requiring actual cessation. (i) *Facts*. Same facts as *Example 6*, except the plan does not provide participant *F* with the reward in subsequent years unless *F* actually stops smoking after participating in the tobacco cessation program.

(ii) *Conclusion*. In this *Example 7*, the program is not reasonably designed under paragraph (f)(4)(iii) of this section and does not provide a reasonable alternative standard as required under paragraph (f)(4)(iv) of this section. The plan cannot cease to provide a reasonable alternative standard merely because the participant did not stop smoking after participating in a smoking cessation program. The plan must continue to offer a reasonable alternative standard whether it is the same or different (such as a new recommendation from *F*'s personal physician or a new nicotine replacement therapy).

Example 8—Tobacco use surcharge with smoking cessation program alternative that is not reasonable. (i) *Facts*. Same facts as *Example 6*, except the plan does not facilitate participant *F*'s enrollment in a smoking cessation program. Instead the plan advises *F* to find a program, pay for it, and provide a certificate of completion to the plan.

(ii) *Conclusion*. In this *Example 8*, the requirement for *F* to find and pay for *F*'s own smoking cessation program means that the alternative program is not reasonable. Accordingly, the plan has not offered a reasonable alternative standard that complies with paragraphs (f)(4)(iii) and (iv) of this section and the program fails to satisfy the requirements of paragraph (f) of this section.

(5) *Applicable percentage*—(i) For purposes of this paragraph (f), the applicable percentage is 30 percent, except that the applicable percentage is increased by an additional 20 percentage points (to 50 percent) to the extent that the additional percentage is in connection with a program designed to prevent or reduce tobacco use.

(ii) The rules of this paragraph (f)(5) are illustrated by the following examples:

Example 1. (i) *Facts.* An employer sponsors a group health plan. The annual premium for employee-only coverage is $6,000 (of which the employer pays $4,500 per year and the employee pays $1,500 per year). The plan offers employees a health-contingent wellness program with several components, focused on exercise, blood sugar, weight, cholesterol, and blood pressure. The reward for compliance is an annual premium rebate of $600.

(ii) *Conclusion.* In this *Example 1,* the reward for the wellness program, $600, does not exceed the applicable percentage of 30 percent of the total annual cost of employee-only coverage, $1,800. ($6,000 × 30% = $1,800.)

Example 2. (i) *Facts.* Same facts as *Example 1,* except the wellness program is exclusively a tobacco prevention program. Employees who have used tobacco in the last 12 months and who are not enrolled in the plan's tobacco cessation program are charged a $1,000 premium surcharge (in addition to their employee contribution towards the coverage). (Those who participate in the plan's tobacco cessation program are not assessed the $1,000 surcharge.)

(ii) *Conclusion.* In this *Example 2,* the reward for the wellness program (absence of a $1,000 surcharge), does not exceed the applicable percentage of 50 percent of the total annual cost of employee-only coverage, $3,000. ($6,000 × 50% = $3,000.)

Example 3. (i) *Facts.* Same facts as *Example 1,* except that, in addition to the $600 reward for compliance with the health-contingent wellness program, the plan also imposes an additional $2,000 tobacco premium surcharge on employees who have used tobacco in the last 12 months and who are not enrolled in the plan's tobacco cessation program. (Those who participate in the plan's tobacco cessation program are not assessed the $2,000 surcharge.)

(ii) *Conclusion.* In this *Example 3,* the total of all rewards (including absence of a surcharge for participating in the tobacco program) is $2,600 ($600 + $2,000 = $2,600), which does not exceed the applicable percentage of 50 percent of the total annual cost of employee-only coverage ($3,000); and, tested separately, the $600 reward for the wellness program unrelated to tobacco use does not exceed the applicable percentage of 30 percent of the total annual cost of employee-only coverage ($1,800).

Example 4. (i) *Facts.* An employer sponsors a group health plan. The total annual premium for employee-only coverage (including both employer and employee contributions towards the coverage) is $5,000. The plan provides a $250 reward to employees who complete a health risk assessment, without regard to the health issues identified as part of the assessment. The plan also offers a Healthy Heart program, which is a health-contingent wellness program, with an opportunity to earn a $1,500 reward.

(ii) *Conclusion.* In this *Example 4,* even though the total reward for all wellness programs under the plan is $1,750 ($250 + $1,500 = $1,750, which exceeds the applicable percentage of 30 percent of the cost of the annual premium for employee-only coverage ($5,000 × 30% = $1,500)), only the reward offered for compliance with the health-contingent wellness program ($1,500) is taken into account in determining whether the rules of this paragraph (f)(5) are met. (The $250 reward is offered in connection with a participatory wellness program and therefore is not taken into account.) Accordingly, the health-contingent wellness program offers a reward that does not exceed the applicable percentage of 30 percent of the total annual cost of employee-only coverage.

(6) *Sample language.* The following language, or substantially similar language, can be used to satisfy the notice requirement of paragraphs (f)(3)(v) or (f)(4)(v) of this section: ''Your health plan is committed to helping you achieve your best health. Rewards for participating in a wellness program are available to all employees. If you think you might be unable to meet a standard for a reward under this wellness program, you might qualify for an opportunity to earn the same reward by different means. Contact us at [insert contact information] and we will work with you (and, if you wish, with your doctor) to find a wellness program with the same reward that is right for you in light of your health status.''

(g) *More favorable treatment of individuals with adverse health factors permitted*—(1) *In rules for eligibility*—(i) Nothing in this section prevents a group health plan or group health insurance issuer from establishing more favorable rules for eligibility (described in paragraph (b)(1) of this section) for individuals with an adverse health factor, such as disability, than for individuals without the adverse health factor. Moreover, nothing in this section prevents a plan or issuer from charging a higher premium or contribution with respect to individuals with an adverse health factor if they would not be eligible for the coverage were it not for the adverse health factor. (However, other laws, including State insurance laws, may set or limit

premium rates; these laws are not affected by this section.)

(ii) The rules of this paragraph (g)(1) are illustrated by the following examples:

Example 1. (i) *Facts.* An employer sponsors a group health plan that generally is available to employees, spouses of employees, and dependent children until age 26. However, dependent children who are disabled are eligible for coverage beyond age 26.

(ii) *Conclusion.* In this Example 1, the plan provision allowing coverage for disabled dependent children beyond age 26 satisfies this paragraph (g)(1) (and thus does not violate this section).

Example 2. (i) *Facts.* An employer sponsors a group health plan, which is generally available to employees (and members of the employee's family) until the last day of the month in which the employee ceases to perform services for the employer. The plan generally charges employees $50 per month for employee-only coverage and $125 per month for family coverage. However, an employee who ceases to perform services for the employer by reason of disability may remain covered under the plan until the last day of the month that is 12 months after the month in which the employee ceased to perform services for the employer. During this extended period of coverage, the plan charges the employee $100 per month for employee-only coverage and $250 per month for family coverage. (This extended period of coverage is without regard to whatever rights the employee (or members of the employee's family) may have for COBRA continuation coverage.)

(ii) *Conclusion.* In this *Example 2,* the plan provision allowing extended coverage for disabled employees and their families satisfies this paragraph (g)(1) (and thus does not violate this section). In addition, the plan is permitted, under this paragraph (g)(1), to charge the disabled employees a higher premium during the extended period of coverage.

Example 3. (i) *Facts.* To comply with the requirements of a COBRA continuation provision, a group health plan generally makes COBRA continuation coverage available for a maximum period of 18 months in connection with a termination of employment but makes the coverage available for a maximum period of 29 months to certain disabled individuals and certain members of the disabled individual's family. Although the plan generally requires payment of 102 percent of the applicable premium for the first 18 months of COBRA continuation coverage, the plan requires payment of 150 percent of the applicable premium for the disabled individual's COBRA continuation coverage during the disability extension if the disabled individual would not be entitled to COBRA continuation coverage but for the disability.

(ii) *Conclusion.* In this *Example 3,* the plan provision allowing extended COBRA continuation coverage for disabled individuals satisfies this paragraph (g)(1) (and thus does not violate this section). In addition, the plan is permitted, under this paragraph (g)(1), to charge the disabled individuals a higher premium for the extended coverage if the individuals would not be eligible for COBRA continuation coverage were it not for the disability. (Similarly, if the plan provided an extended period of coverage for disabled individuals pursuant to State law or plan provision rather than pursuant to a COBRA continuation coverage provision, the plan could likewise charge the disabled individuals a higher premium for the extended coverage.)

(2) *In premiums or contributions*—(i) Nothing in this section prevents a group health plan or group health insurance issuer from charging individuals a premium or contribution that is less than the premium (or contribution) for similarly situated individuals if the lower charge is based on an adverse health factor, such as disability.

(ii) The rules of this paragraph (g)(2) are illustrated by the following example:

Example. (i) *Facts.* Under a group health plan, employees are generally required to pay $50 per month for employee-only coverage and $125 per month for family coverage under the plan. However, employees who are disabled receive coverage (whether employee-only or family coverage) under the plan free of charge.

(ii) *Conclusion.* In this *Example,* the plan provision waiving premium payment for disabled employees is permitted under this paragraph (g)(2) (and thus does not violate this section).

(h) *No effect on other laws.* Compliance with this section is not determinative of compliance with any other provision of the Act (including the COBRA continuation provisions) or any other State or Federal law, such as the Americans with Disabilities Act. Therefore, although the rules of this section would not prohibit a plan or issuer from treating one group of similarly situated individuals differently from another (such as providing different benefit packages to current and former employees), other Federal or State laws may require that two separate groups of similarly situated individuals be treated the same for certain

purposes (such as making the same benefit package available to COBRA qualified beneficiaries as is made available to active employees). In addition, although this section generally does not impose new disclosure obligations on plans and issuers, this section does not affect any other laws, including those that require accurate disclosures and prohibit intentional misrepresentation.

(i) *Applicability dates*. This section applies for plan years beginning on or after July 1, 2007.

[71 FR 75038, Dec. 13, 2006, as amended at 74 FR 51683, Oct. 7, 2009; 78 FR 33181, June 3, 2013; 79 FR 10309, Feb. 24, 2014]

§ 2590.702–1 Additional requirements prohibiting discrimination based on genetic information.

(a) *Definitions*. Unless otherwise provided, the definitions in this paragraph (a) govern in applying the provisions of this section.

(1) *Collect* means, with respect to information, to request, require, or purchase such information.

(2) *Family member* means, with respect to an individual—

(i) A dependent (as defined for purposes of § 2590.701–2 of this Part) of the individual; or

(ii) Any other person who is a first-degree, second-degree, third-degree, or fourth-degree relative of the individual or of a dependent of the individual. Relatives by affinity (such as by marriage or adoption) are treated the same as relatives by consanguinity (that is, relatives who share a common biological ancestor). In determining the degree of the relationship, relatives by less than full consanguinity (such as half-siblings, who share only one parent) are treated the same as relatives by full consanguinity (such as siblings who share both parents).

(A) First-degree relatives include parents, spouses, siblings, and children.

(B) Second-degree relatives include grandparents, grandchildren, aunts, uncles, nephews, and nieces.

(C) Third-degree relatives include great-grandparents, great-grandchildren, great aunts, great uncles, and first cousins.

(D) Fourth-degree relatives include great-great grandparents, great-great grandchildren, and children of first cousins.

(3) *Genetic information* means—(i) Subject to paragraphs (a)(3)(ii) and (a)(3)(iii) of this section, with respect to an individual, information about—

(A) The individual's genetic tests (as defined in paragraph (a)(5) of this section);

(B) The genetic tests of family members of the individual;

(C) The manifestation (as defined in paragraph (a)(6) of this section) of a disease or disorder in family members of the individual; or

(D) Any request for, or receipt of, genetic services (as defined in paragraph (a)(4) of this section), or participation in clinical research which includes genetic services, by the individual or any family member of the individual.

(ii) The term *genetic information* does not include information about the sex or age of any individual.

(iii) The term *genetic information* includes—

(A) With respect to a pregnant woman (or a family member of the pregnant woman), genetic information of any fetus carried by the pregnant woman; and

(B) With respect to an individual (or a family member of the individual) who is utilizing an assisted reproductive technology, genetic information of any embryo legally held by the individual or family member.

(4) *Genetic services* means—

(i) A genetic test, as defined in paragraph (a)(5) of this section;

(ii) Genetic counseling (including obtaining, interpreting, or assessing genetic information); or

(iii) Genetic education.

(5)(i) *Genetic test* means an analysis of human DNA, RNA, chromosomes, proteins, or metabolites, if the analysis detects genotypes, mutations, or chromosomal changes. However, a genetic test does not include an analysis of proteins or metabolites that is directly related to a manifested disease, disorder, or pathological condition. Accordingly, a test to determine whether an individual has a BRCA1 or BRCA2 variant is a genetic test. Similarly, a test to determine whether an individual has a genetic variant associated with hereditary nonpolyposis

colorectal cancer is a genetic test. However, an HIV test, complete blood count, cholesterol test, liver function test, or test for the presence of alcohol or drugs is not a genetic test.

(ii) The rules of this paragraph (a)(5) are illustrated by the following example:

Example. (i) *Facts*. Individual *A* is a newborn covered under a group health plan. *A* undergoes a phenylketonuria (PKU) screening, which measures the concentration of a metabolite, phenylalanine, in *A*'s blood. In PKU, a mutation occurs in the phenylalanine hydroxylase (PAH) gene which contains instructions for making the enzyme needed to break down the amino acid phenylalanine. Individuals with the mutation, who have a deficiency in the enzyme to break down phenylalanine, have high concentrations of phenylalanine.

(ii) *Conclusion*. In this *Example*, the PKU screening is a genetic test with respect to *A* because the screening is an analysis of metabolites that detects a genetic mutation.

(6)(i) *Manifestation* or *manifested* means, with respect to a disease, disorder, or pathological condition, that an individual has been or could reasonably be diagnosed with the disease, disorder, or pathological condition by a health care professional with appropriate training and expertise in the field of medicine involved. For purposes of this section, a disease, disorder, or pathological condition is not manifested if a diagnosis is based principally on genetic information.

(ii) The rules of this paragraph (a)(6) are illustrated by the following examples:

Example 1. (i) *Facts*. Individual *A* has a family medical history of diabetes. *A* begins to experience excessive sweating, thirst, and fatigue. *A*'s physician examines *A* and orders blood glucose testing (which is not a genetic test). Based on the physician's examination, *A*'s symptoms, and test results that show elevated levels of blood glucose, *A*'s physician diagnoses *A* as having adult onset diabetes mellitus (Type 2 diabetes).

(ii) *Conclusion*. In this *Example 1*, *A* has been diagnosed by a health care professional with appropriate training and expertise in the field of medicine involved. The diagnosis is not based principally on genetic information. Thus, Type 2 diabetes is manifested with respect to *A*.

Example 2. (i) *Facts*. Individual *B* has several family members with colon cancer. One of them underwent genetic testing which detected a mutation in the MSH2 gene associated with hereditary nonpolyposis colorectal cancer (HNPCC). *B*'s physician, a health care professional with appropriate training and expertise in the field of medicine involved, recommends that *B* undergo a targeted genetic test to look for the specific mutation found in *B*'s relative to determine if *B* has an elevated risk for cancer. The genetic test with respect to *B* showed that *B* also carries the mutation and is at increased risk to develop colorectal and other cancers associated with HNPCC. *B* has a colonoscopy which indicates no signs of disease, and *B* has no symptoms.

(ii) *Conclusion*. In this *Example 2*, because *B* has no signs or symptoms of colorectal cancer, *B* has not been and could not reasonably be diagnosed with HNPCC. Thus, HNPCC is not manifested with respect to *B*.

Example 3. (i) *Facts*. Same facts as *Example 2*, except that *B*'s colonoscopy and subsequent tests indicate the presence of HNPCC. Based on the colonoscopy and subsequent test results, *B*'s physician makes a diagnosis of HNPCC.

(ii) Conclusion. In this *Example 3*, HNPCC is manifested with respect to *B* because a health care professional with appropriate training and expertise in the field of medicine involved has made a diagnosis that is not based principally on genetic information.

Example 4. (i) *Facts*. Individual *C* has a family member that has been diagnosed with Huntington's Disease. A genetic test indicates that *C* has the Huntington's Disease gene variant. At age 42, *C* begins suffering from occasional moodiness and disorientation, symptoms which are associated with Huntington's Disease. *C* is examined by a neurologist (a physician with appropriate training and expertise for diagnosing Huntington's Disease). The examination includes a clinical neurological exam. The results of the examination do not support a diagnosis of Huntington's Disease.

(ii) *Conclusion*. In this *Example 4*, *C* is not and could not reasonably be diagnosed with Huntington's Disease by a health care professional with appropriate training and expertise. Therefore, Huntington's Disease is not manifested with respect to *C*.

Example 5. (i) *Facts*. Same facts as *Example 4*, except that *C* exhibits additional neurological and behavioral symptoms, and the results of the examination support a diagnosis of Huntington's Disease with respect to *C*.

(ii) *Conclusion*. In this *Example 5*, *C* could reasonably be diagnosed with Huntington's Disease by a health care professional with appropriate training and expertise. Therefore, Huntington's Disease is manifested with respect to *C*.

(7) *Underwriting purposes* has the meaning given in paragraph (d)(1) of this section.

(b) *No group-based discrimination based on genetic information*—(1) *In general.* For purposes of this section, a group health plan, and a health insurance issuer offering health insurance coverage in connection with a group health plan, must not adjust premium or contribution amounts for the plan, or any group of similarly situated individuals under the plan, on the basis of genetic information. For this purpose, ''similarly situated individuals'' are those described in § 2590.702(d) of this Part.

(2) *Rule of construction.* Nothing in paragraph (b)(1) of this section (or in paragraph (d)(1) or (d)(2) of this section) limits the ability of a health insurance issuer offering health insurance coverage in connection with a group health plan to increase the premium for a group health plan or a group of similarly situated individuals under the plan based on the manifestation of a disease or disorder of an individual who is enrolled in the plan. In such a case, however, the manifestation of a disease or disorder in one individual cannot also be used as genetic information about other group members to further increase the premium for a group health plan or a group of similarly situated individuals under the plan.

(3) *Examples.* The rules of this paragraph (b) are illustrated by the following examples:

Example 1. (i) *Facts.* An employer sponsors a group health plan that provides coverage through a health insurance issuer. In order to determine the premium rate for the upcoming plan year, the issuer reviews the claims experience of individuals covered under the plan and other health status information of the individuals, including genetic information. The issuer finds that three individuals covered under the plan had unusually high claims experience. In addition, the issuer finds that the genetic information of two other individuals indicates the individuals have a higher probability of developing certain illnesses although the illnesses are not manifested at this time. The issuer quotes the plan a higher per-participant rate because of both the genetic information and the higher claims experience.

(ii) *Conclusion.* In this *Example 1,* the issuer violates the provisions of this paragraph (b) because the issuer adjusts the premium based on genetic information. However, if the adjustment related solely to claims experience, the adjustment would not violate the requirements of this section (nor would it violate the requirements of paragraph (c) of § 2590.702 of this Part, which prohibits discrimination in individual premiums or contributions based on a health factor but permits increases in the group rate based on a health factor).

Example 2. (i) *Facts.* An employer sponsors a group health plan that provides coverage through a health insurance issuer. In order to determine the premium rate for the upcoming plan year, the issuer reviews the claims experience of individuals covered under the plan and other health status information of the individuals, including genetic information. The issuer finds that Employee *A* has made claims for treatment of polycystic kidney disease. *A* also has two dependent children covered under the plan. The issuer quotes the plan a higher per-participant rate because of both *A*'s claims experience and the family medical history of *A*'s children (that is, the fact that *A* has the disease).

(ii) *Conclusion.* In this *Example 2,* the issuer violates the provisions of this paragraph (b) because, by taking the likelihood that *A*'s children may develop polycystic kidney disease into account in computing the rate for the plan, the issuer adjusts the premium based on genetic information relating to a condition that has not been manifested in *A*'s children. However, it is permissible for the issuer to increase the premium based on *A*'s claims experience.

(c) *Limitation on requesting or requiring genetic testing*—(1) *General rule.* Except as otherwise provided in this paragraph (c), a group health plan, and a health insurance issuer offering health insurance coverage in connection with a group health plan, must not request or require an individual or a family member of the individual to undergo a genetic test.

(2) *Health care professional may recommend a genetic test.* Nothing in paragraph (c)(1) of this section limits the authority of a health care professional who is providing health care services to an individual to request that the individual undergo a genetic test.

(3) *Examples.* The rules of paragraphs (c)(1) and (2) of this section are illustrated by the following examples:

Example 1. (i) *Facts.* Individual *A* goes to a physician for a routine physical examination. The physician reviews *A*'s family medical history and *A* informs the physician that *A*'s mother has been diagnosed with Huntington's Disease. The physician advises *A* that

Huntington's Disease is hereditary and recommends that *A* undergo a genetic test.

(ii) *Conclusion*. In this *Example 1*, the physician is a health care professional who is providing health care services to *A*. Therefore, the physician's recommendation that *A* undergo the genetic test does not violate this paragraph (c).

Example 2. (i) *Facts*. Individual *B* is covered by a health maintenance organization (HMO). *B* is a child being treated for leukemia. *B*'s physician, who is employed by the HMO, is considering a treatment plan that includes six-mercaptopurine, a drug for treating leukemia in most children. However, the drug could be fatal if taken by a small percentage of children with a particular gene variant. *B*'s physician recommends that *B* undergo a genetic test to detect this variant before proceeding with this course of treatment.

(ii) *Conclusion*. In this *Example 2*, even though the physician is employed by the HMO, the physician is nonetheless a health care professional who is providing health care services to *B*. Therefore, the physician's recommendation that *B* undergo the genetic test does not violate this paragraph (c).

(4) *Determination regarding payment*. (i) *In general*. As provided in this paragraph (c)(4), nothing in paragraph (c)(1) of this section precludes a plan or issuer from obtaining and using the results of a genetic test in making a determination regarding payment. For this purpose, ''payment'' has the meaning given such term in 45 CFR 164.501 of the privacy regulations issued under the Health Insurance Portability and Accountability Act. Thus, if a plan or issuer conditions payment for an item or service based on its medical appropriateness and the medical appropriateness of the item or service depends on the genetic makeup of a patient, then the plan or issuer is permitted to condition payment for the item or service on the outcome of a genetic test. The plan or issuer may also refuse payment if the patient does not undergo the genetic test.

(ii) *Limitation*. A plan or issuer is permitted to request only the minimum amount of information necessary to make a determination regarding payment. The minimum amount of information necessary is determined in accordance with the minimum necessary standard in 45 CFR 164.502(b) of the privacy regulations issued under the Health Insurance Portability and Accountability Act.

(iii) *Examples*. *See* paragraph (e) of this section for examples illustrating the rules of this paragraph (c)(4), as well as other provisions of this section.

(5) *Research exception*. Notwithstanding paragraph (c)(1) of this section, a plan or issuer may request, but not require, that a participant or beneficiary undergo a genetic test if all of the conditions of this paragraph (c)(5) are met:

(i) *Research in accordance with Federal regulations and applicable State or local law or regulations*. The plan or issuer makes the request pursuant to research, as defined in 45 CFR 46.102(d), that complies with 45 CFR Part 46 or equivalent Federal regulations, and any applicable State or local law or regulations for the protection of human subjects in research.

(ii) *Written request for participation in research*. The plan or issuer makes the request in writing, and the request clearly indicates to each participant or beneficiary (or, in the case of a minor child, to the legal guardian of the beneficiary) that—

(A) Compliance with the request is voluntary; and

(B) Noncompliance will have no effect on eligibility for benefits (as described in § 2590.702(b)(1) of this Part) or premium or contribution amounts.

(iii) *Prohibition on underwriting*. No genetic information collected or acquired under this paragraph (c)(5) can be used for underwriting purposes (as described in paragraph (d)(1) of this section).

(iv) *Notice to Federal agencies*. The plan or issuer completes a copy of the ''Notice of Research Exception under the Genetic Information Nondiscrimination Act'' authorized by the Secretary and provides the notice to the address specified in the instructions thereto.

(d) *Prohibitions on collection of genetic information*—(1) *For underwriting purposes*—(i) *General rule*. A group health plan, and a health insurance issuer offering health insurance coverage in connection with a group health plan, must not collect (as defined in paragraph (a)(1) of this section) genetic information for underwriting purposes. *See* paragraph (e) of this section for examples illustrating the rules of this

paragraph (d)(1), as well as other provisions of this section.

(ii) *Underwriting purposes defined.* Subject to paragraph (d)(1)(iii) of this section, *underwriting purposes* means, with respect to any group health plan, or health insurance coverage offered in connection with a group health plan—

(A) Rules for, or determination of, eligibility (including enrollment and continued eligibility) for benefits under the plan or coverage as described in § 2590.702(b)(1)(ii) of this Part (including changes in deductibles or other cost-sharing mechanisms in return for activities such as completing a health risk assessment or participating in a wellness program);

(B) The computation of premium or contribution amounts under the plan or coverage (including discounts, rebates, payments in kind, or other premium differential mechanisms in return for activities such as completing a health risk assessment or participating in a wellness program);

(C) The application of any preexisting condition exclusion under the plan or coverage; and

(D) Other activities related to the creation, renewal, or replacement of a contract of health insurance or health benefits.

(iii) *Medical appropriateness.* If an individual seeks a benefit under a group health plan or health insurance coverage, the plan or coverage may limit or exclude the benefit based on whether the benefit is medically appropriate, and the determination of whether the benefit is medically appropriate is not within the meaning of underwriting purposes. Accordingly, if an individual seeks a benefit under the plan and the plan or issuer conditions the benefit based on its medical appropriateness and the medical appropriateness of the benefit depends on genetic information of the individual, then the plan or issuer is permitted to condition the benefit on the genetic information. A plan or issuer is permitted to request only the minimum amount of genetic information necessary to determine medical appropriateness. The plan or issuer may deny the benefit if the patient does not provide the genetic information required to determine medical appropriateness. If an individual is not seeking a benefit, the medical appropriateness exception of this paragraph (d)(1)(iii) to the definition of underwriting purposes does not apply. *See* paragraph (e) of this section for examples illustrating the medical appropriateness provisions of this paragraph (d)(1)(iii), as well as other provisions of this section.

(2) *Prior to or in connection with enrollment.* (i) *In general.* A group health plan, and a health insurance issuer offering health insurance coverage in connection with a group health plan, must not collect genetic information with respect to any individual prior to that individual's effective date of coverage under that plan or coverage, nor in connection with the rules for eligibility (as defined in § 2590.702(b)(1)(ii) of this Part) that apply to that individual. Whether or not an individual's information is collected prior to that individual's effective date of coverage is determined at the time of collection.

(ii) *Incidental collection exception.*—(A) *In general.* If a group health plan, or a health insurance issuer offering health insurance coverage in connection with a group health plan, obtains genetic information incidental to the collection of other information concerning any individual, the collection is not a violation of this paragraph (d)(2), as long as the collection is not for underwriting purposes in violation of paragraph (d)(1) of this section.

(B) *Limitation.* The incidental collection exception of this paragraph (d)(2)(ii) does not apply in connection with any collection where it is reasonable to anticipate that health information will be received, unless the collection explicitly states that genetic information should not be provided.

(3) *Examples.* The rules of this paragraph (d) are illustrated by the following examples:

Example 1. (i) *Facts.* A group health plan provides a premium reduction to enrollees who complete a health risk assessment. The health risk assessment is requested to be completed after enrollment. Whether or not it is completed or what responses are given on it has no effect on an individual's enrollment status, or on the enrollment status of members of the individual's family. The health risk assessment includes questions about the individual's family medical history.

(ii) *Conclusion*. In this *Example 1*, the health risk assessment includes a request for genetic information (that is, the individual's family medical history). Because completing the health risk assessment results in a premium reduction, the request for genetic information is for underwriting purposes. Consequently, the request violates the prohibition on the collection of genetic information in paragraph (d)(1) of this section.

Example 2. (i) *Facts*. The same facts as *Example 1*, except there is no premium reduction or any other reward for completing the health risk assessment.

(ii) *Conclusion*. In this *Example 2*, the request is not for underwriting purposes, nor is it prior to or in connection with enrollment. Therefore, it does not violate the prohibition on the collection of genetic information in this paragraph (d).

Example 3. (i) *Facts*. A group health plan requests that enrollees complete a health risk assessment prior to enrollment, and includes questions about the individual's family medical history. There is no reward or penalty for completing the health risk assessment.

(ii) *Conclusion*. In this *Example 3*, because the health risk assessment includes a request for genetic information (that is, the individual's family medical history), and requests the information prior to enrollment, the request violates the prohibition on the collection of genetic information in paragraph (d)(2) of this section. Moreover, because it is a request for genetic information, it is not an incidental collection under paragraph (d)(2)(ii) of this section.

Example 4. (i) *Facts*. The facts are the same as in *Example 1*, except there is no premium reduction or any other reward given for completion of the health risk assessment. However, certain people completing the health risk assessment may become eligible for additional benefits under the plan by being enrolled in a disease management program based on their answers to questions about family medical history. Other people may become eligible for the disease management program based solely on their answers to questions about their individual medical history.

(ii) *Conclusion*. In this *Example 4*, the request for information about an individual's family medical history could result in the individual being eligible for benefits for which the individual would not otherwise be eligible. Therefore, the questions about family medical history on the health risk assessment are a request for genetic information for underwriting purposes and are prohibited under this paragraph (d). Although the plan conditions eligibility for the disease management program based on determinations of medical appropriateness, the exception for determinations of medical appropriateness does not apply because the individual is not seeking benefits.

Example 5. (i) *Facts*. A group health plan requests enrollees to complete two distinct health risk assessments (HRAs) after and unrelated to enrollment. The first HRA instructs the individual to answer only for the individual and not for the individual's family. The first HRA does not ask about any genetic tests the individual has undergone or any genetic services the individual has received. The plan offers a reward for completing the first HRA. The second HRA asks about family medical history and the results of genetic tests the individual has undergone. The plan offers no reward for completing the second HRA and the instructions make clear that completion of the second HRA is wholly voluntary and will not affect the reward given for completion of the first HRA.

(ii) *Conclusion*. In this *Example 5*, no genetic information is collected in connection with the first HRA, which offers a reward, and no benefits or other rewards are conditioned on the request for genetic information in the second HRA. Consequently, the request for genetic information in the second HRA is not for underwriting purposes, and the two HRAs do not violate the prohibition on the collection of genetic information in this paragraph (d).

Example 6. (i) *Facts*. A group health plan waives its annual deductible for enrollees who complete an HRA. The HRA is requested to be completed after enrollment. Whether or not the HRA is completed or what responses are given on it has no effect on an individual's enrollment status, or on the enrollment status of members of the individual's family. The HRA does not include any direct questions about the individual's genetic information (including family medical history). However, the last question reads, ''Is there anything else relevant to your health that you would like us to know or discuss with you?''

(ii) *Conclusion*. In this *Example 6*, the plan's request for medical information does not explicitly state that genetic information should not be provided. Therefore, any genetic information collected in response to the question is not within the incidental collection exception and is prohibited under this paragraph (d).

Example 7. (i) *Facts*. Same facts as *Example 6*, except that the last question goes on to state, ''In answering this question, you should not include any genetic information. That is, please do not include any family medical history or any information related to genetic testing, genetic services, genetic counseling, or genetic diseases for which you believe you may be at risk.''

(ii) *Conclusion*. In this *Example 7*, the plan's request for medical information explicitly states that genetic information should not be provided. Therefore, any genetic information collected in response to the question is

within the incidental collection exception. However, the plan may not use any genetic information it obtains incidentally for underwriting purposes.

Example 8. (i) *Facts.* Issuer *M* acquires Issuer *N*. *M* requests *N*'s records, stating that *N* should not provide genetic information and should review the records to excise any genetic information. *N* assembles the data requested by *M* and, although *N* reviews it to delete genetic information, the data from a specific region included some individuals' family medical history. Consequently, *M* receives genetic information about some of *N*'s covered individuals.

(ii) *Conclusion.* In this *Example 8, M*'s request for health information explicitly stated that genetic information should not be provided. Therefore, the collection of genetic information was within the incidental collection exception. However, *M* may not use the genetic information it obtained incidentally for underwriting purposes.

(e) *Examples regarding determinations of medical appropriateness.* The application of the rules of paragraphs (c) and (d) of this section to plan or issuer determinations of medical appropriateness is illustrated by the following examples:

Example 1. (i) *Facts.* Individual *A*'s group health plan covers genetic testing for celiac disease for individuals who have family members with this condition. After *A*'s son is diagnosed with celiac disease, *A* undergoes a genetic test and promptly submits a claim for the test to *A*'s issuer for reimbursement. The issuer asks *A* to provide the results of the genetic test before the claim is paid.

(ii) *Conclusion.* In this *Example 1,* under the rules of paragraph (c)(4) of this section the issuer is permitted to request only the minimum amount of information necessary to make a decision regarding payment. Because the results of the test are not necessary for the issuer to make a decision regarding the payment of *A*'s claim, the issuer's request for the results of the genetic test violates paragraph (c) of this section.

Example 2. (i) *Facts.* Individual *B*'s group health plan covers a yearly mammogram for participants and beneficiaries starting at age 40, or at age 30 for those with increased risk for breast cancer, including individuals with BRCA1 or BRCA2 gene mutations. *B* is 33 years old and has the BRCA2 mutation. *B* undergoes a mammogram and promptly submits a claim to *B*'s plan for reimbursement. Following an established policy, the plan asks *B* for evidence of increased risk of breast cancer, such as the results of a genetic test or a family history of breast cancer, before the claim for the mammogram is paid. This policy is applied uniformly to all similarly situated individuals and is not directed at individuals based on any genetic information.

(ii) *Conclusion.* In this *Example 2,* the plan does not violate paragraphs (c) or (d) of this section. Under paragraph (c), the plan is permitted to request and use the results of a genetic test to make a determination regarding payment, provided the plan requests only the minimum amount of information necessary. Because the medical appropriateness of the mammogram depends on the genetic makeup of the patient, the minimum amount of information necessary includes the results of the genetic test. Similarly, the plan does not violate paragraph (d) of this section because the plan is permitted to request genetic information in making a determination regarding the medical appropriateness of a claim if the genetic information is necessary to make the determination (and if the genetic information is not used for underwriting purposes).

Example 3. (i) *Facts.* Individual *C* was previously diagnosed with and treated for breast cancer, which is currently in remission. In accordance with the recommendation of *C*'s physician, *C* has been taking a regular dose of tamoxifen to help prevent a recurrence. *C*'s group health plan adopts a new policy requiring patients taking tamoxifen to undergo a genetic test to ensure that tamoxifen is medically appropriate for their genetic makeup. In accordance with, at the time, the latest scientific research, tamoxifen is not helpful in up to 7 percent of breast cancer patients, those with certain variations of the gene for making the CYP_2D6 enzyme. If a patient has a gene variant making tamoxifen not medically appropriate, the plan does not pay for the tamoxifen prescription.

(ii) *Conclusion.* In this *Example 3,* the plan does not violate paragraph (c) of this section if it conditions future payments for the tamoxifen prescription on *C*'s undergoing a genetic test to determine what genetic markers *C* has for making the CYP_2D6 enzyme. Nor does the plan violate paragraph (c) of this section if the plan refuses future payment if the results of the genetic test indicate that tamoxifen is not medically appropriate for *C*.

Example 4. (i) *Facts.* A group health plan offers a diabetes disease management program to all similarly situated individuals for whom it is medically appropriate based on whether the individuals have or are at risk for diabetes. The program provides enhanced benefits related only to diabetes for individuals who qualify for the program. The plan sends out a notice to all participants that describes the diabetes disease management program and explains the terms for eligibility. Individuals interested in enrolling in the program are advised to contact the plan to demonstrate that they have diabetes or that they are at risk for diabetes. For individuals who do not currently have diabetes,

genetic information may be used to demonstrate that an individual is at risk.

(ii) *Conclusion*. In this *Example 4*, the plan may condition benefits under the disease management program upon a showing by an individual that the individual is at risk for diabetes, even if such showing may involve genetic information, provided that the plan requests genetic information only when necessary to make a determination regarding whether the disease management program is medically appropriate for the individual and only requests the minimum amount of information necessary to make that determination.

Example 5. (i) *Facts*. Same facts as *Example 4*, except that the plan includes a questionnaire that asks about the occurrence of diabetes in members of the individual's family as part of the notice describing the disease management program.

(ii) *Conclusion*. In this *Example 5*, the plan violates the requirements of paragraph (d)(1) of this section because the requests for genetic information are not limited to those situations in which it is necessary to make a determination regarding whether the disease management program is medically appropriate for the individuals.

Example 6. (i) *Facts*. Same facts as *Example 4*, except the disease management program provides an enhanced benefit in the form of a lower annual deductible to individuals under the program; the lower deductible applies with respect to all medical expenses incurred by the individual. Thus, whether or not a claim relates to diabetes, the individual is provided with a lower deductible based on the individual providing the plan with genetic information.

(ii) *Conclusion*. In this *Example 6*, because the enhanced benefits include benefits not related to the determination of medical appropriateness, making available the enhanced benefits is within the meaning of underwriting purposes. Accordingly, the plan may not request or require genetic information (including family history information) in determining eligibility for enhanced benefits under the program because such a request would be for underwriting purposes and would violate paragraph (d)(1) of this section.

(f) *Applicability date*. This section applies for plan years beginning on or after December 7, 2009.

[74 FR 51683, Oct. 7, 2009]

§ 2590.703 Guaranteed renewability in multiemployer plans and multiple employer welfare arrangements. [Reserved]

Subpart C—Other Requirements

SOURCE: 62 FR 16941, Apr. 8, 1997, unless otherwise noted. Redesignated at 65 FR 62142, Dec. 27, 2000.

§ 2590.711 Standards relating to benefits for mothers and newborns.

(a) *Hospital length of stay*—(1) *General rule*. Except as provided in paragraph (a)(5) of this section, a group health plan, or a health insurance issuer offering group health insurance coverage, that provides benefits for a hospital length of stay in connection with childbirth for a mother or her newborn may not restrict benefits for the stay to less than—

(i) 48 hours following a vaginal delivery; or

(ii) 96 hours following a delivery by cesarean section.

(2) *When stay begins*—(i) *Delivery in a hospital*. If delivery occurs in a hospital, the hospital length of stay for the mother or newborn child begins at the time of delivery (or in the case of multiple births, at the time of the last delivery).

(ii) *Delivery outside a hospital*. If delivery occurs outside a hospital, the hospital length of stay begins at the time the mother or newborn is admitted as a hospital inpatient in connection with childbirth. The determination of whether an admission is in connection with childbirth is a medical decision to be made by the attending provider.

(3) *Examples*. The rules of paragraphs (a)(1) and (2) of this section are illustrated by the following examples. In each example, the group health plan provides benefits for hospital lengths of stay in connection with childbirth and is subject to the requirements of this section, as follows:

Example 1. (i) *Facts*. A pregnant woman covered under a group health plan goes into labor and is admitted to the hospital at 10 p.m. on June 11. She gives birth by vaginal delivery at 6 a.m. on June 12.

(ii) *Conclusion*. In this *Example 1*, the 48-hour period described in paragraph (a)(1)(i) of this section ends at 6 a.m. on June 14.

Example 2. (i) *Facts.* A woman covered under a group health plan gives birth at home by vaginal delivery. After the delivery, the woman begins bleeding excessively in connection with the childbirth and is admitted to the hospital for treatment of the excessive bleeding at 7 p.m. on October 1.

(ii) *Conclusion.* In this *Example 2*, the 48-hour period described in paragraph (a)(1)(i) of this section ends at 7 p.m. on October 3.

Example 3. (i) *Facts.* A woman covered under a group health plan gives birth by vaginal delivery at home. The child later develops pneumonia and is admitted to the hospital. The attending provider determines that the admission is not in connection with childbirth.

(ii) *Conclusion.* In this *Example 3*, the hospital length-of-stay requirements of this section do not apply to the child's admission to the hospital because the admission is not in connection with childbirth.

(4) *Authorization not required*—(i) *In general.* A plan or issuer is prohibited from requiring that a physician or other health care provider obtain authorization from the plan or issuer for prescribing the hospital length of stay specified in paragraph (a)(1) of this section. (See also paragraphs (b)(2) and (c)(3) of this section for rules and examples regarding other authorization and certain notice requirements.)

(ii) *Example.* The rule of this paragraph (a)(4) is illustrated by the following example:

Example. (i) *Facts.* In the case of a delivery by cesarean section, a group health plan subject to the requirements of this section automatically provides benefits for any hospital length of stay of up to 72 hours. For any longer stay, the plan requires an attending provider to complete a certificate of medical necessity. The plan then makes a determination, based on the certificate of medical necessity, whether a longer stay is medically necessary.

(ii) *Conclusion.* In this *Example*, the requirement that an attending provider complete a certificate of medical necessity to obtain authorization for the period between 72 hours and 96 hours following a delivery by cesarean section is prohibited by this paragraph (a)(4).

(5) *Exceptions*—(i) *Discharge of mother.* If a decision to discharge a mother earlier than the period specified in paragraph (a)(1) of this section is made by an attending provider, in consultation with the mother, the requirements of paragraph (a)(1) of this section do not apply for any period after the discharge.

(ii) *Discharge of newborn.* If a decision to discharge a newborn child earlier than the period specified in paragraph (a)(1) of this section is made by an attending provider, in consultation with the mother (or the newborn's authorized representative), the requirements of paragraph (a)(1) of this section do not apply for any period after the discharge.

(iii) *Attending provider defined.* For purposes of this section, attending provider means an individual who is licensed under applicable state law to provide maternity or pediatric care and who is directly responsible for providing maternity or pediatric care to a mother or newborn child. Therefore, a plan, hospital, managed care organization, or other issuer is not an attending provider.

(iv) *Example.* The rules of this paragraph (a)(5) are illustrated by the following example:

Example. (i) *Facts.* A pregnant woman covered under a group health plan subject to the requirements of this section goes into labor and is admitted to a hospital. She gives birth by cesarean section. On the third day after the delivery, the attending provider for the mother consults with the mother, and the attending provider for the newborn consults with the mother regarding the newborn. The attending providers authorize the early discharge of both the mother and the newborn. Both are discharged approximately 72 hours after the delivery. The plan pays for the 72-hour hospital stays.

(ii) *Conclusion.* In this *Example*, the requirements of this paragraph (a) have been satisfied with respect to the mother and the newborn. If either is readmitted, the hospital stay for the readmission is not subject to this section.

(b) *Prohibitions*—(1) *With respect to mothers*—(i) *In general.* A group health plan, and a health insurance issuer offering group health insurance coverage, may not—

(A) Deny a mother or her newborn child eligibility or continued eligibility to enroll or renew coverage under the terms of the plan solely to avoid the requirements of this section; or

(B) Provide payments (including payments-in-kind) or rebates to a mother to encourage her to accept less than the minimum protections available under this section.

(ii) *Examples*. The rules of this paragraph (b)(1) are illustrated by the following examples. In each example, the group health plan is subject to the requirements of this section, as follows:

Example 1. (i) *Facts*. A group health plan provides benefits for at least a 48-hour hospital length of stay following a vaginal delivery. If a mother and newborn covered under the plan are discharged within 24 hours after the delivery, the plan will waive the copayment and deductible.

(ii) *Conclusion*. In this *Example 1*, because waiver of the copayment and deductible is in the nature of a rebate that the mother would not receive if she and her newborn remained in the hospital, it is prohibited by this paragraph (b)(1). (In addition, the plan violates paragraph (b)(2) of this section because, in effect, no copayment or deductible is required for the first portion of the stay and a double copayment and a deductible are required for the second portion of the stay.)

Example 2. (i) *Facts*. A group health plan provides benefits for at least a 48-hour hospital length of stay following a vaginal delivery. In the event that a mother and her newborn are discharged earlier than 48 hours and the discharges occur after consultation with the mother in accordance with the requirements of paragraph (a)(5) of this section, the plan provides for a follow-up visit by a nurse within 48 hours after the discharges to provide certain services that the mother and her newborn would otherwise receive in the hospital.

(ii) *Conclusion*. In this *Example 2*, because the follow-up visit does not provide any services beyond what the mother and her newborn would receive in the hospital, coverage for the follow-up visit is not prohibited by this paragraph (b)(1).

(2) *With respect to benefit restrictions*—(i) *In general*. Subject to paragraph (c)(3) of this section, a group health plan, and a health insurance issuer offering group health insurance coverage, may not restrict the benefits for any portion of a hospital length of stay specified in paragraph (a) of this section in a manner that is less favorable than the benefits provided for any preceding portion of the stay.

(ii) *Example*. The rules of this paragraph (b)(2) are illustrated by the following example:

Example. (i) *Facts*. A group health plan subject to the requirements of this section provides benefits for hospital lengths of stay in connection with childbirth. In the case of a delivery by cesarean section, the plan automatically pays for the first 48 hours. With respect to each succeeding 24-hour period, the participant or beneficiary must call the plan to obtain precertification from a utilization reviewer, who determines if an additional 24-hour period is medically necessary. If this approval is not obtained, the plan will not provide benefits for any succeeding 24-hour period.

(ii) *Conclusion*. In this *Example*, the requirement to obtain precertification for the two 24-hour periods immediately following the initial 48-hour stay is prohibited by this paragraph (b)(2) because benefits for the latter part of the stay are restricted in a manner that is less favorable than benefits for a preceding portion of the stay. (However, this section does not prohibit a plan from requiring precertification for any period after the first 96 hours.) In addition, the requirement to obtain precertification from the plan based on medical necessity for a hospital length of stay within the 96-hour period would also violate paragraph (a) of this section.

(3) *With respect to attending providers*. A group health plan, and a health insurance issuer offering group health insurance coverage, may not directly or indirectly—

(i) Penalize (for example, take disciplinary action against or retaliate against), or otherwise reduce or limit the compensation of, an attending provider because the provider furnished care to a participant or beneficiary in accordance with this section; or

(ii) Provide monetary or other incentives to an attending provider to induce the provider to furnish care to a participant or beneficiary in a manner inconsistent with this section, including providing any incentive that could induce an attending provider to discharge a mother or newborn earlier than 48 hours (or 96 hours) after delivery.

(c) *Construction*. With respect to this section, the following rules of construction apply:

(1) *Hospital stays not mandatory*. This section does not require a mother to—

(i) Give birth in a hospital; or

(ii) Stay in the hospital for a fixed period of time following the birth of her child.

(2) *Hospital stay benefits not mandated*. This section does not apply to any group health plan, or any group health insurance coverage, that does not provide benefits for hospital lengths of stay in connection with childbirth for a mother or her newborn child.

(3) *Cost-sharing rules*—(i) *In general.* This section does not prevent a group health plan or a health insurance issuer offering group health insurance coverage from imposing deductibles, coinsurance, or other cost-sharing in relation to benefits for hospital lengths of stay in connection with childbirth for a mother or a newborn under the plan or coverage, except that the coinsurance or other cost-sharing for any portion of the hospital length of stay specified in paragraph (a) of this section may not be greater than that for any preceding portion of the stay.

(ii) *Examples.* The rules of this paragraph (c)(3) are illustrated by the following examples. In each example, the group health plan is subject to the requirements of this section, as follows:

Example 1. (i) *Facts.* A group health plan provides benefits for at least a 48-hour hospital length of stay in connection with vaginal deliveries. The plan covers 80 percent of the cost of the stay for the first 24-hour period and 50 percent of the cost of the stay for the second 24-hour period. Thus, the coinsurance paid by the patient increases from 20 percent to 50 percent after 24 hours.

(ii) *Conclusion.* In this *Example 1*, the plan violates the rules of this paragraph (c)(3) because coinsurance for the second 24-hour period of the 48-hour stay is greater than that for the preceding portion of the stay. (In addition, the plan also violates the similar rule in paragraph (b)(2) of this section.)

Example 2. (i) *Facts.* A group health plan generally covers 70 percent of the cost of a hospital length of stay in connection with childbirth. However, the plan will cover 80 percent of the cost of the stay if the participant or beneficiary notifies the plan of the pregnancy in advance of admission and uses whatever hospital the plan may designate.

(ii) *Conclusion.* In this *Example 2*, the plan does not violate the rules of this paragraph (c)(3) because the level of benefits provided (70 percent or 80 percent) is consistent throughout the 48-hour (or 96-hour) hospital length of stay required under paragraph (a) of this section. (In addition, the plan does not violate the rules in paragraph (a)(4) or (b)(2) of this section.)

(4) *Compensation of attending provider.* This section does not prevent a group health plan or a health insurance issuer offering group health insurance coverage from negotiating with an attending provider the level and type of compensation for care furnished in accordance with this section (including paragraph (b) of this section).

(d) *Notice requirement.* See 29 CFR 2520.102–3(u) (relating to the disclosure requirement under section 711(d) of the Act).

(e) *Applicability in certain states*—(1) *Health insurance coverage.* The requirements of section 711 of the Act and this section do not apply with respect to health insurance coverage offered in connection with a group health plan if there is a state law regulating the coverage that meets any of the following criteria:

(i) The state law requires the coverage to provide for at least a 48-hour hospital length of stay following a vaginal delivery and at least a 96-hour hospital length of stay following a delivery by cesarean section.

(ii) The state law requires the coverage to provide for maternity and pediatric care in accordance with guidelines that relate to care following childbirth established by the American College of Obstetricians and Gynecologists, the American Academy of Pediatrics, or any other established professional medical association.

(iii) The state law requires, in connection with the coverage for maternity care, that the hospital length of stay for such care is left to the decision of (or is required to be made by) the attending provider in consultation with the mother. State laws that require the decision to be made by the attending provider with the consent of the mother satisfy the criterion of this paragraph (e)(1)(iii).

(2) *Group health plans*—(i) *Fully-insured plans.* For a group health plan that provides benefits solely through health insurance coverage, if the state law regulating the health insurance coverage meets any of the criteria in paragraph (e)(1) of this section, then the requirements of section 711 of the Act and this section do not apply.

(ii) *Self-insured plans.* For a group health plan that provides all benefits for hospital lengths of stay in connection with childbirth other than through health insurance coverage, the requirements of section 711 of the Act and this section apply.

(iii) *Partially-insured plans.* For a group health plan that provides some benefits through health insurance coverage, if the state law regulating the

health insurance coverage meets any of the criteria in paragraph (e)(1) of this section, then the requirements of section 711 of the Act and this section apply only to the extent the plan provides benefits for hospital lengths of stay in connection with childbirth other than through health insurance coverage.

(3) *Relation to section 731(a) of the Act.* The preemption provisions contained in section 731(a)(1) of the Act and Sec. 2590.731(a) do not supersede a state law described in paragraph (e)(1) of this section.

(4) *Examples.* The rules of this paragraph (e) are illustrated by the following examples:

Example 1. (i) *Facts.* A group health plan buys group health insurance coverage in a state that requires that the coverage provide for at least a 48-hour hospital length of stay following a vaginal delivery and at least a 96-hour hospital length of stay following a delivery by cesarean section.

(ii) *Conclusion.* In this *Example 1*, the coverage is subject to state law, and the requirements of section 711 of the Act and this section do not apply.

Example 2. (i) *Facts.* A self-insured group health plan covers hospital lengths of stay in connection with childbirth in a state that requires health insurance coverage to provide for maternity and pediatric care in accordance with guidelines that relate to care following childbirth established by the American College of Obstetricians and Gynecologists and the American Academy of Pediatrics.

(ii) *Conclusion.* In this *Example 2*, even though the state law satisfies the criterion of paragraph (e)(1)(ii) of this section, because the plan provides benefits for hospital lengths of stay in connection with childbirth other than through health insurance coverage, the plan is subject to the requirements of section 711 of the Act and this section.

(f) *Applicability date.* This section applies to group health plans, and health insurance issuers offering group health insurance coverage, for plan years beginning on or after January 1, 2009.

[73 FR 62422, Oct. 20, 2008]

§ 2590.712 Parity in mental health and substance use disorder benefits.

(a) *Meaning of terms.* For purposes of this section, except where the context clearly indicates otherwise, the following terms have the meanings indicated:

Aggregate lifetime dollar limit means a dollar limitation on the total amount of specified benefits that may be paid under a group health plan (or health insurance coverage offered in connection with such a plan) for any coverage unit.

Annual dollar limit means a dollar limitation on the total amount of specified benefits that may be paid in a 12-month period under a group health plan (or health insurance coverage offered in connection with such a plan) for any coverage unit.

Coverage unit means coverage unit as described in paragraph (c)(1)(iv) of this section.

Cumulative financial requirements are financial requirements that determine whether or to what extent benefits are provided based on accumulated amounts and include deductibles and out-of-pocket maximums. (However, cumulative financial requirements do not include aggregate lifetime or annual dollar limits because these two terms are excluded from the meaning of financial requirements.)

Cumulative quantitative treatment limitations are treatment limitations that determine whether or to what extent benefits are provided based on accumulated amounts, such as annual or lifetime day or visit limits.

Financial requirements include deductibles, copayments, coinsurance, or out-of-pocket maximums. Financial requirements do not include aggregate lifetime or annual dollar limits.

Medical/surgical benefits means benefits with respect to items or services for medical conditions or surgical procedures, as defined under the terms of the plan or health insurance coverage and in accordance with applicable Federal and State law, but does not include mental health or substance use disorder benefits. Any condition defined by the plan or coverage as being or as not being a medical/surgical condition must be defined to be consistent with generally recognized independent standards of current medical practice (for example, the most current version of the International Classification of Diseases (ICD) or State guidelines).

Mental health benefits means benefits with respect to items or services for mental health conditions, as defined under the terms of the plan or health insurance coverage and in accordance with applicable Federal and State law. Any condition defined by the plan or coverage as being or as not being a mental health condition must be defined to be consistent with generally recognized independent standards of current medical practice (for example, the most current version of the Diagnostic and Statistical Manual of Mental Disorders (DSM), the most current version of the ICD, or State guidelines).

Substance use disorder benefits means benefits with respect to items or services for substance use disorders, as defined under the terms of the plan or health insurance coverage and in accordance with applicable Federal and State law. Any disorder defined by the plan as being or as not being a substance use disorder must be defined to be consistent with generally recognized independent standards of current medical practice (for example, the most current version of the DSM, the most current version of the ICD, or State guidelines).

Treatment limitations include limits on benefits based on the frequency of treatment, number of visits, days of coverage, days in a waiting period, or other similar limits on the scope or duration of treatment. Treatment limitations include both quantitative treatment limitations, which are expressed numerically (such as 50 outpatient visits per year), and nonquantitative treatment limitations, which otherwise limit the scope or duration of benefits for treatment under a plan or coverage. (See paragraph (c)(4)(ii) of this section for an illustrative list of nonquantitative treatment limitations.) A permanent exclusion of all benefits for a particular condition or disorder, however, is not a treatment limitation for purposes of this definition.

(b) *Parity requirements with respect to aggregate lifetime and annual dollar limits.* This paragraph (b) details the application of the parity requirements with respect to aggregate lifetime and annual dollar limits. This paragraph (b) does not address the provisions of PHS Act section 2711, as incorporated in ERISA section 715 and Code section 9815, which prohibit imposing lifetime and annual limits on the dollar value of essential health benefits. For more information, see 29 CFR 2590.715–2711.

(1) *General*—(i) *General parity requirement.* A group health plan (or health insurance coverage offered by an issuer in connection with a group health plan) that provides both medical/surgical benefits and mental health or substance use disorder benefits must comply with paragraph (b)(2), (b)(3), or (b)(5) of this section.

(ii) *Exception.* The rule in paragraph (b)(1)(i) of this section does not apply if a plan (or health insurance coverage) satisfies the requirements of paragraph (f) or (g) of this section (relating to exemptions for small employers and for increased cost).

(2) *Plan with no limit or limits on less than one-third of all medical/surgical benefits.* If a plan (or health insurance coverage) does not include an aggregate lifetime or annual dollar limit on any medical/surgical benefits or includes an aggregate lifetime or annual dollar limit that applies to less than one-third of all medical/surgical benefits, it may not impose an aggregate lifetime or annual dollar limit, respectively, on mental health or substance use disorder benefits.

(3) *Plan with a limit on at least two-thirds of all medical/surgical benefits.* If a plan (or health insurance coverage) includes an aggregate lifetime or annual dollar limit on at least two-thirds of all medical/surgical benefits, it must either—

(i) Apply the aggregate lifetime or annual dollar limit both to the medical/surgical benefits to which the limit would otherwise apply and to mental health or substance use disorder benefits in a manner that does not distinguish between the medical/surgical benefits and mental health or substance use disorder benefits; or

(ii) Not include an aggregate lifetime or annual dollar limit on mental health or substance use disorder benefits that is less than the aggregate lifetime or annual dollar limit, respectively, on

medical/surgical benefits. (For cumulative limits other than aggregate lifetime or annual dollar limits, see paragraph (c)(3)(v) of this section prohibiting separately accumulating cumulative financial requirements or cumulative quantitative treatment limitations.)

(4) *Determining one-third and two-thirds of all medical/surgical benefits.* For purposes of this paragraph (b), the determination of whether the portion of medical/surgical benefits subject to an aggregate lifetime or annual dollar limit represents one-third or two-thirds of all medical/surgical benefits is based on the dollar amount of all plan payments for medical/surgical benefits expected to be paid under the plan for the plan year (or for the portion of the plan year after a change in plan benefits that affects the applicability of the aggregate lifetime or annual dollar limits). Any reasonable method may be used to determine whether the dollar amount expected to be paid under the plan will constitute one-third or two-thirds of the dollar amount of all plan payments for medical/surgical benefits.

(5) *Plan not described in paragraph (b)(2) or (b)(3) of this section*—(i) *In general.* A group health plan (or health insurance coverage) that is not described in paragraph (b)(2) or (b)(3) of this section with respect to aggregate lifetime or annual dollar limits on medical/surgical benefits, must either—

(A) Impose no aggregate lifetime or annual dollar limit, as appropriate, on mental health or substance use disorder benefits; or

(B) Impose an aggregate lifetime or annual dollar limit on mental health or substance use disorder benefits that is no less than an average limit calculated for medical/surgical benefits in the following manner. The average limit is calculated by taking into account the weighted average of the aggregate lifetime or annual dollar limits, as appropriate, that are applicable to the categories of medical/surgical benefits. Limits based on delivery systems, such as inpatient/outpatient treatment or normal treatment of common, low-cost conditions (such as treatment of normal births), do not constitute categories for purposes of this paragraph (b)(5)(i)(B). In addition, for purposes of determining weighted averages, any benefits that are not within a category that is subject to a separately-designated dollar limit under the plan are taken into account as a single separate category by using an estimate of the upper limit on the dollar amount that a plan may reasonably be expected to incur with respect to such benefits, taking into account any other applicable restrictions under the plan.

(ii) *Weighting.* For purposes of this paragraph (b)(5), the weighting applicable to any category of medical/surgical benefits is determined in the manner set forth in paragraph (b)(4) of this section for determining one-third or two-thirds of all medical/surgical benefits.

(c) *Parity requirements with respect to financial requirements and treatment limitations*—(1) *Clarification of terms*—(i) *Classification of benefits.* When reference is made in this paragraph (c) to a classification of benefits, the term ''classification'' means a classification as described in paragraph (c)(2)(ii) of this section.

(ii) *Type of financial requirement or treatment limitation.* When reference is made in this paragraph (c) to a type of financial requirement or treatment limitation, the reference to type means its nature. Different types of financial requirements include deductibles, copayments, coinsurance, and out-of-pocket maximums. Different types of quantitative treatment limitations include annual, episode, and lifetime day and visit limits. See paragraph (c)(4)(ii) of this section for an illustrative list of nonquantitative treatment limitations.

(iii) *Level of a type of financial requirement or treatment limitation.* When reference is made in this paragraph (c) to a level of a type of financial requirement or treatment limitation, level refers to the magnitude of the type of financial requirement or treatment limitation. For example, different levels of coinsurance include 20 percent and 30 percent; different levels of a copayment include $15 and $20; different levels of a deductible include $250 and $500; and different levels of an episode limit include 21 inpatient days per episode and 30 inpatient days per episode.

(iv) *Coverage unit.* When reference is made in this paragraph (c) to a coverage unit, coverage unit refers to the way in which a plan (or health insurance coverage) groups individuals for purposes of determining benefits, or premiums or contributions. For example, different coverage units include self-only, family, and employee-plus-spouse.

(2) *General parity requirement*—(i) *General rule.* A group health plan (or health insurance coverage offered by an issuer in connection with a group health plan) that provides both medical/surgical benefits and mental health or substance use disorder benefits may not apply any financial requirement or treatment limitation to mental health or substance use disorder benefits in any classification that is more restrictive than the predominant financial requirement or treatment limitation of that type applied to substantially all medical/surgical benefits in the same classification. Whether a financial requirement or treatment limitation is a predominant financial requirement or treatment limitation that applies to substantially all medical/surgical benefits in a classification is determined separately for each type of financial requirement or treatment limitation. The application of the rules of this paragraph (c)(2) to financial requirements and quantitative treatment limitations is addressed in paragraph (c)(3) of this section; the application of the rules of this paragraph (c)(2) to nonquantitative treatment limitations is addressed in paragraph (c)(4) of this section.

(ii) *Classifications of benefits used for applying rules*—(A) *In general.* If a plan (or health insurance coverage) provides mental health or substance use disorder benefits in any classification of benefits described in this paragraph (c)(2)(ii), mental health or substance use disorder benefits must be provided in every classification in which medical/surgical benefits are provided. In determining the classification in which a particular benefit belongs, a plan (or health insurance issuer) must apply the same standards to medical/surgical benefits and to mental health or substance use disorder benefits. To the extent that a plan (or health insurance coverage) provides benefits in a classification and imposes any separate financial requirement or treatment limitation (or separate level of a financial requirement or treatment limitation) for benefits in the classification, the rules of this paragraph (c) apply separately with respect to that classification for all financial requirements or treatment limitations (illustrated in examples in paragraph (c)(2)(ii)(C) of this section). The following classifications of benefits are the only classifications used in applying the rules of this paragraph (c):

(*1*) *Inpatient, in-network.* Benefits furnished on an inpatient basis and within a network of providers established or recognized under a plan or health insurance coverage. See special rules for plans with multiple network tiers in paragraph (c)(3)(iii) of this section.

(*2*) *Inpatient, out-of-network.* Benefits furnished on an inpatient basis and outside any network of providers established or recognized under a plan or health insurance coverage. This classification includes inpatient benefits under a plan (or health insurance coverage) that has no network of providers.

(*3*) *Outpatient, in-network.* Benefits furnished on an outpatient basis and within a network of providers established or recognized under a plan or health insurance coverage. See special rules for office visits and plans with multiple network tiers in paragraph (c)(3)(iii) of this section.

(*4*) *Outpatient, out-of-network.* Benefits furnished on an outpatient basis and outside any network of providers established or recognized under a plan or health insurance coverage. This classification includes outpatient benefits under a plan (or health insurance coverage) that has no network of providers. See special rules for office visits in paragraph (c)(3)(iii) of this section.

(*5*) *Emergency care.* Benefits for emergency care.

(*6*) *Prescription drugs.* Benefits for prescription drugs. See special rules for multi-tiered prescription drug benefits in paragraph (c)(3)(iii) of this section.

(B) *Application to out-of-network providers.* See paragraph (c)(2)(ii)(A) of this section, under which a plan (or

health insurance coverage) that provides mental health or substance use disorder benefits in any classification of benefits must provide mental health or substance use disorder benefits in every classification in which medical/surgical benefits are provided, including out-of-network classifications.

(C) *Examples*. The rules of this paragraph (c)(2)(ii) are illustrated by the following examples. In each example, the group health plan is subject to the requirements of this section and provides both medical/surgical benefits and mental health and substance use disorder benefits.

Example 1. (i) *Facts*. A group health plan offers inpatient and outpatient benefits and does not contract with a network of providers. The plan imposes a $500 deductible on all benefits. For inpatient medical/surgical benefits, the plan imposes a coinsurance requirement. For outpatient medical/surgical benefits, the plan imposes copayments. The plan imposes no other financial requirements or treatment limitations.

(ii) *Conclusion*. In this *Example 1*, because the plan has no network of providers, all benefits provided are out-of-network. Because inpatient, out-of-network medical/surgical benefits are subject to separate financial requirements from outpatient, out-of-network medical/surgical benefits, the rules of this paragraph (c) apply separately with respect to any financial requirements and treatment limitations, including the deductible, in each classification.

Example 2. (i) *Facts*. A plan imposes a $500 deductible on all benefits. The plan has no network of providers. The plan generally imposes a 20 percent coinsurance requirement with respect to all benefits, without distinguishing among inpatient, outpatient, emergency care, or prescription drug benefits. The plan imposes no other financial requirements or treatment limitations.

(ii) *Conclusion*. In this *Example 2*, because the plan does not impose separate financial requirements (or treatment limitations) based on classification, the rules of this paragraph (c) apply with respect to the deductible and the coinsurance across all benefits.

Example 3. (i) *Facts*. Same facts as *Example 2*, except the plan exempts emergency care benefits from the 20 percent coinsurance requirement. The plan imposes no other financial requirements or treatment limitations.

(ii) *Conclusion*. In this *Example 3*, because the plan imposes separate financial requirements based on classifications, the rules of this paragraph (c) apply with respect to the deductible and the coinsurance separately for—

(A) Benefits in the emergency care classification; and

(B) All other benefits.

Example 4. (i) *Facts*. Same facts as *Example 2*, except the plan also imposes a preauthorization requirement for all inpatient treatment in order for benefits to be paid. No such requirement applies to outpatient treatment.

(ii) *Conclusion*. In this *Example 4*, because the plan has no network of providers, all benefits provided are out-of-network. Because the plan imposes a separate treatment limitation based on classifications, the rules of this paragraph (c) apply with respect to the deductible and coinsurance separately for—

(A) Inpatient, out-of-network benefits; and

(B) All other benefits.

(3) *Financial requirements and quantitative treatment limitations*—(i) *Determining ''substantially all'' and ''predominant''*—(A) *Substantially all*. For purposes of this paragraph (c), a type of financial requirement or quantitative treatment limitation is considered to apply to substantially all medical/surgical benefits in a classification of benefits if it applies to at least two-thirds of all medical/surgical benefits in that classification. (For this purpose, benefits expressed as subject to a zero level of a type of financial requirement are treated as benefits not subject to that type of financial requirement, and benefits expressed as subject to a quantitative treatment limitation that is unlimited are treated as benefits not subject to that type of quantitative treatment limitation.) If a type of financial requirement or quantitative treatment limitation does not apply to at least two-thirds of all medical/surgical benefits in a classification, then that type cannot be applied to mental health or substance use disorder benefits in that classification.

(B) *Predominant*—*(1)* If a type of financial requirement or quantitative treatment limitation applies to at least two-thirds of all medical/surgical benefits in a classification as determined under paragraph (c)(3)(i)(A) of this section, the level of the financial requirement or quantitative treatment limitation that is considered the predominant level of that type in a classification of benefits is the level that applies to more than one-half of medical/surgical benefits in that classification

subject to the financial requirement or quantitative treatment limitation.

(*2*) If, with respect to a type of financial requirement or quantitative treatment limitation that applies to at least two-thirds of all medical/surgical benefits in a classification, there is no single level that applies to more than one-half of medical/surgical benefits in the classification subject to the financial requirement or quantitative treatment limitation, the plan (or health insurance issuer) may combine levels until the combination of levels applies to more than one-half of medical/surgical benefits subject to the financial requirement or quantitative treatment limitation in the classification. The least restrictive level within the combination is considered the predominant level of that type in the classification. (For this purpose, a plan may combine the most restrictive levels first, with each less restrictive level added to the combination until the combination applies to more than one-half of the benefits subject to the financial requirement or treatment limitation.)

(C) *Portion based on plan payments.* For purposes of this paragraph (c), the determination of the portion of medical/surgical benefits in a classification of benefits subject to a financial requirement or quantitative treatment limitation (or subject to any level of a financial requirement or quantitative treatment limitation) is based on the dollar amount of all plan payments for medical/surgical benefits in the classification expected to be paid under the plan for the plan year (or for the portion of the plan year after a change in plan benefits that affects the applicability of the financial requirement or quantitative treatment limitation).

(D) *Clarifications for certain threshold requirements.* For any deductible, the dollar amount of plan payments includes all plan payments with respect to claims that would be subject to the deductible if it had not been satisfied. For any out-of-pocket maximum, the dollar amount of plan payments includes all plan payments associated with out-of-pocket payments that are taken into account towards the out-of-pocket maximum as well as all plan payments associated with out-of-pocket payments that would have been made towards the out-of-pocket maximum if it had not been satisfied. Similar rules apply for any other thresholds at which the rate of plan payment changes. (See also PHS Act section 2707(b) and Affordable Care Act section 1302(c), which establish limitations on annual deductibles for non-grandfathered health plans in the small group market and annual limitations on out-of-pocket maximums for all non-grandfathered health plans.)

(E) *Determining the dollar amount of plan payments.* Subject to paragraph (c)(3)(i)(D) of this section, any reasonable method may be used to determine the dollar amount expected to be paid under a plan for medical/surgical benefits subject to a financial requirement or quantitative treatment limitation (or subject to any level of a financial requirement or quantitative treatment limitation).

(ii) *Application to different coverage units.* If a plan (or health insurance coverage) applies different levels of a financial requirement or quantitative treatment limitation to different coverage units in a classification of medical/surgical benefits, the predominant level that applies to substantially all medical/surgical benefits in the classification is determined separately for each coverage unit.

(iii) *Special rules*—(A) *Multi-tiered prescription drug benefits.* If a plan (or health insurance coverage) applies different levels of financial requirements to different tiers of prescription drug benefits based on reasonable factors determined in accordance with the rules in paragraph (c)(4)(i) of this section (relating to requirements for non-quantitative treatment limitations) and without regard to whether a drug is generally prescribed with respect to medical/surgical benefits or with respect to mental health or substance use disorder benefits, the plan (or health insurance coverage) satisfies the parity requirements of this paragraph (c) with respect to prescription drug benefits. Reasonable factors include cost, efficacy, generic versus brand name, and mail order versus pharmacy pick-up.

(B) *Multiple network tiers.* If a plan (or health insurance coverage) provides benefits through multiple tiers of in-

network providers (such as an in-network tier of preferred providers with more generous cost-sharing to participants than a separate in-network tier of participating providers), the plan may divide its benefits furnished on an in-network basis into sub-classifications that reflect network tiers, if the tiering is based on reasonable factors determined in accordance with the rules in paragraph (c)(4)(i) of this section (such as quality, performance, and market standards) and without regard to whether a provider provides services with respect to medical/surgical benefits or mental health or substance use disorder benefits. After the sub-classifications are established, the plan or issuer may not impose any financial requirement or treatment limitation on mental health or substance use disorder benefits in any sub-classification that is more restrictive than the predominant financial requirement or treatment limitation that applies to substantially all medical/surgical benefits in the sub-classification using the methodology set forth in paragraph (c)(3)(i) of this section.

(C) *Sub-classifications permitted for office visits, separate from other outpatient services.* For purposes of applying the financial requirement and treatment limitation rules of this paragraph (c), a plan or issuer may divide its benefits furnished on an outpatient basis into the two sub-classifications described in this paragraph (c)(3)(iii)(C). After the sub-classifications are established, the plan or issuer may not impose any financial requirement or quantitative treatment limitation on mental health or substance use disorder benefits in any sub-classification that is more restrictive than the predominant financial requirement or quantitative treatment limitation that applies to substantially all medical/surgical benefits in the sub-classification using the methodology set forth in paragraph (c)(3)(i) of this section. Sub-classifications other than these special rules, such as separate sub-classifications for generalists and specialists, are not permitted. The two sub-classifications permitted under this paragraph (c)(3)(iii)(C) are:

(*1*) Office visits (such as physician visits), and

(*2*) All other outpatient items and services (such as outpatient surgery, facility charges for day treatment centers, laboratory charges, or other medical items).

(iv) *Examples.* The rules of paragraphs (c)(3)(i), (c)(3)(ii), and (c)(3)(iii) of this section are illustrated by the following examples. In each example, the group health plan is subject to the requirements of this section and provides both medical/surgical benefits and mental health and substance use disorder benefits.

Example 1. (i) *Facts.* For inpatient, out-of-network medical/surgical benefits, a group health plan imposes five levels of coinsurance. Using a reasonable method, the plan projects its payments for the upcoming year as follows:

Coinsurance rate	0%	10%	15%	20%	30%	Total.
Projected payments	$200x	$100x	$450x	$100x	$150x	$1,000x.
Percent of total plan costs	20%	10%	45%	10%	15%	
Percent subject to coinsurance level.	N/A	12.5% (100x/800x)	56.25% (450x/800x)	12.5% (100x/800x)	18.75% (150x/800x)	

The plan projects plan costs of $800x to be subject to coinsurance ($100x + $450x + $100x + $150x = $800x). Thus, 80 percent ($800x/$1,000x) of the benefits are projected to be subject to coinsurance, and 56.25 percent of the benefits subject to coinsurance are projected to be subject to the 15 percent coinsurance level.

(ii) *Conclusion.* In this *Example 1*, the two-thirds threshold of the substantially all standard is met for coinsurance because 80 percent of all inpatient, out-of-network medical/surgical benefits are subject to coinsurance. Moreover, the 15 percent coinsurance is the predominant level because it is applicable to more than one-half of inpatient, out-of-network medical/surgical benefits subject to the coinsurance requirement. The plan may not impose any level of coinsurance with respect to inpatient, out-of-network mental health or substance use disorder benefits that is more restrictive than the 15 percent level of coinsurance.

Example 2. (i) *Facts.* For outpatient, in-network medical/surgical benefits, a plan imposes five different copayment levels. Using a reasonable method, the plan projects payments for the upcoming year as follows:

Copayment amount	$0	$10	$15	$20	$50	Total.
Projected payments	$200x	$200x	$200x	$300x	$100x	$1,000x.
Percent of total plan costs.	20%	20%	20%	30%	10%	
Percent subject to copayments.	N/A	25% (200x/800x)	25% (200x/800x)	37.5% (300x/800x)	12.5% (100x/800x)	

The plan projects plan costs of $800x to be subject to copayments ($200x + $200x +$300x + $100x = $800x). Thus, 80 percent ($800x/$1,000x) of the benefits are projected to be subject to a copayment.

(ii) *Conclusion.* In this *Example 2,* the two-thirds threshold of the substantially all standard is met for copayments because 80 percent of all outpatient, in-network medical/surgical benefits are subject to a copayment. Moreover, there is no single level that applies to more than one-half of medical/surgical benefits in the classification subject to a copayment (for the $10 copayment, 25%; for the $15 copayment, 25%; for the $20 copayment, 37.5%; and for the $50 copayment, 12.5%). The plan can combine any levels of copayment, including the highest levels, to determine the predominant level that can be applied to mental health or substance use disorder benefits. If the plan combines the highest levels of copayment, the combined projected payments for the two highest copayment levels, the $50 copayment and the $20 copayment, are not more than one-half of the outpatient, in-network medical/surgical benefits subject to a copayment because they are exactly one-half ($300x + $100x = $400x; $400x/$800x = 50%). The combined projected payments for the three highest copayment levels—the $50 copayment, the $20 copayment, and the $15 copayment—are more than one-half of the outpatient, in-network medical/surgical benefits subject to the copayments ($100x + $300x + $200x = $600x; $600x/$800x = 75%). Thus, the plan may not impose any copayment on outpatient, in-network mental health or substance use disorder benefits that is more restrictive than the least restrictive copayment in the combination, the $15 copayment.

Example 3. (i) *Facts.* A plan imposes a $250 deductible on all medical/surgical benefits for self-only coverage and a $500 deductible on all medical/surgical benefits for family coverage. The plan has no network of providers. For all medical/surgical benefits, the plan imposes a coinsurance requirement. The plan imposes no other financial requirements or treatment limitations.

(ii) *Conclusion.* In this *Example 3,* because the plan has no network of providers, all benefits are provided out-of-network. Because self-only and family coverage are subject to different deductibles, whether the deductible applies to substantially all medical/surgical benefits is determined separately for self-only medical/surgical benefits and family medical/surgical benefits. Because the coinsurance is applied without regard to coverage units, the predominant coinsurance that applies to substantially all medical/surgical benefits is determined without regard to coverage units.

Example 4. (i) *Facts.* A plan applies the following financial requirements for prescription drug benefits. The requirements are applied without regard to whether a drug is generally prescribed with respect to medical/surgical benefits or with respect to mental health or substance use disorder benefits. Moreover, the process for certifying a particular drug as ''generic'', ''preferred brand name'', ''non-preferred brand name'', or ''specialty'' complies with the rules of paragraph (c)(4)(i) of this section (relating to requirements for nonquantitative treatment limitations).

	Tier 1	Tier 2	Tier 3	Tier 4
Tier description	Generic drugs	Preferred brand name drugs	Non-preferred brand name drugs (which may have Tier 1 or Tier 2 alternatives)	Specialty drugs
Percent paid by plan	90%	80%	60%	50%

(ii) *Conclusion.* In this *Example 4,* the financial requirements that apply to prescription drug benefits are applied without regard to whether a drug is generally prescribed with respect to medical/surgical benefits or with respect to mental health or substance use

disorder benefits; the process for certifying drugs in different tiers complies with paragraph (c)(4) of this section; and the bases for establishing different levels or types of financial requirements are reasonable. The financial requirements applied to prescription drug benefits do not violate the parity requirements of this paragraph (c)(3).

Example 5. (i) *Facts.* A plan has two-tiers of network of providers: a preferred provider tier and a participating provider tier. Providers are placed in either the preferred tier or participating tier based on reasonable factors determined in accordance with the rules in paragraph (c)(4)(i) of this section, such as accreditation, quality and performance measures (including customer feedback), and relative reimbursement rates. Furthermore, provider tier placement is determined without regard to whether a provider specializes in the treatment of mental health conditions or substance use disorders, or medical/surgical conditions. The plan divides the in-network classifications into two sub-classifications (in-network/preferred and in-network/participating). The plan does not impose any financial requirement or treatment limitation on mental health or substance use disorder benefits in either of these sub-classifications that is more restrictive than the predominant financial requirement or treatment limitation that applies to substantially all medical/surgical benefits in each sub-classification.

(ii) *Conclusion.* In this *Example 5*, the division of in-network benefits into sub-classifications that reflect the preferred and participating provider tiers does not violate the parity requirements of this paragraph (c)(3).

Example 6. (i) *Facts.* With respect to outpatient, in-network benefits, a plan imposes a $25 copayment for office visits and a 20 percent coinsurance requirement for outpatient surgery. The plan divides the outpatient, in-network classification into two sub-classifications (in-network office visits and all other outpatient, in-network items and services). The plan or issuer does not impose any financial requirement or quantitative treatment limitation on mental health or substance use disorder benefits in either of these sub-classifications that is more restrictive than the predominant financial requirement or quantitative treatment limitation that applies to substantially all medical/surgical benefits in each sub-classification.

(ii) *Conclusion.* In this *Example 6*, the division of outpatient, in-network benefits into sub-classifications for office visits and all other outpatient, in-network items and services does not violate the parity requirements of this paragraph (c)(3).

Example 7. (i) *Facts.* Same facts as *Example 6*, but for purposes of determining parity, the plan divides the outpatient, in-network classification into outpatient, in-network generalists and outpatient, in-network specialists.

(ii) *Conclusion.* In this *Example 7*, the division of outpatient, in-network benefits into any sub-classifications other than office visits and all other outpatient items and services violates the requirements of paragraph (c)(3)(iii)(C) of this section.

(v) *No separate cumulative financial requirements or cumulative quantitative treatment limitations*—(A) A group health plan (or health insurance coverage offered in connection with a group health plan) may not apply any cumulative financial requirement or cumulative quantitative treatment limitation for mental health or substance use disorder benefits in a classification that accumulates separately from any established for medical/surgical benefits in the same classification.

(B) The rules of this paragraph (c)(3)(v) are illustrated by the following examples:

Example 1. (i) *Facts.* A group health plan imposes a combined annual $500 deductible on all medical/surgical, mental health, and substance use disorder benefits.

(ii) *Conclusion.* In this *Example 1*, the combined annual deductible complies with the requirements of this paragraph (c)(3)(v).

Example 2. (i) *Facts.* A plan imposes an annual $250 deductible on all medical/surgical benefits and a separate annual $250 deductible on all mental health and substance use disorder benefits.

(ii) *Conclusion.* In this *Example 2*, the separate annual deductible on mental health and substance use disorder benefits violates the requirements of this paragraph (c)(3)(v).

Example 3. (i) *Facts.* A plan imposes an annual $300 deductible on all medical/surgical benefits and a separate annual $100 deductible on all mental health or substance use disorder benefits.

(ii) *Conclusion.* In this *Example 3*, the separate annual deductible on mental health and substance use disorder benefits violates the requirements of this paragraph (c)(3)(v).

Example 4. (i) *Facts.* A plan generally imposes a combined annual $500 deductible on all benefits (both medical/surgical benefits and mental health and substance use disorder benefits) except prescription drugs. Certain benefits, such as preventive care, are provided without regard to the deductible. The imposition of other types of financial requirements or treatment limitations varies with each classification. Using reasonable methods, the plan projects its payments for medical/surgical benefits in each classification for the upcoming year as follows:

Classification	Benefits subject to deductible	Total benefits	Percent subject to deductible
Inpatient, in-network	$1,800x	$2,000x	90
Inpatient, out-of-network	1,000x	1,000x	100
Outpatient, in-network	1,400x	2,000x	70
Outpatient, out-of-network	1,880x	2,000x	94
Emergency care	300x	500x	60

(ii) *Conclusion.* In this *Example 4*, the two-thirds threshold of the substantially all standard is met with respect to each classification except emergency care because in each of those other classifications at least two-thirds of medical/surgical benefits are subject to the $500 deductible. Moreover, the $500 deductible is the predominant level in each of those other classifications because it is the only level. However, emergency care mental health and substance use disorder benefits cannot be subject to the $500 deductible because it does not apply to substantially all emergency care medical/surgical benefits.

(4) *Nonquantitative treatment limitations*—(i) *General rule.* A group health plan (or health insurance coverage) may not impose a nonquantitative treatment limitation with respect to mental health or substance use disorder benefits in any classification unless, under the terms of the plan (or health insurance coverage) as written and in operation, any processes, strategies, evidentiary standards, or other factors used in applying the nonquantitative treatment limitation to mental health or substance use disorder benefits in the classification are comparable to, and are applied no more stringently than, the processes, strategies, evidentiary standards, or other factors used in applying the limitation with respect to medical/surgical benefits in the classification.

(ii) *Illustrative list of nonquantitative treatment limitations.* Nonquantitative treatment limitations include—

(A) Medical management standards limiting or excluding benefits based on medical necessity or medical appropriateness, or based on whether the treatment is experimental or investigative;

(B) Formulary design for prescription drugs;

(C) For plans with multiple network tiers (such as preferred providers and participating providers), network tier design;

(D) Standards for provider admission to participate in a network, including reimbursement rates;

(E) Plan methods for determining usual, customary, and reasonable charges;

(F) Refusal to pay for higher-cost therapies until it can be shown that a lower-cost therapy is not effective (also known as fail-first policies or step therapy protocols);

(G) Exclusions based on failure to complete a course of treatment; and

(H) Restrictions based on geographic location, facility type, provider specialty, and other criteria that limit the scope or duration of benefits for services provided under the plan or coverage.

(iii) *Examples.* The rules of this paragraph (c)(4) are illustrated by the following examples. In each example, the group health plan is subject to the requirements of this section and provides both medical/surgical benefits and mental health and substance use disorder benefits.

Example 1. (i) *Facts.* A plan requires prior authorization from the plan's utilization reviewer that a treatment is medically necessary for all inpatient medical/surgical benefits and for all inpatient mental health and substance use disorder benefits. In practice, inpatient benefits for medical/surgical conditions are routinely approved for seven days, after which a treatment plan must be submitted by the patient's attending provider and approved by the plan. On the other hand, for inpatient mental health and substance use disorder benefits, routine approval is given only for one day, after which a treatment plan must be submitted by the patient's attending provider and approved by the plan.

(ii) *Conclusion.* In this Example 1, the plan violates the rules of this paragraph (c)(4) because it is applying a stricter nonquantitative treatment limitation in practice to mental health and substance use disorder benefits than is applied to medical/surgical benefits.

Example 2. (i) *Facts.* A plan applies concurrent review to inpatient care where there are high levels of variation in length of stay (as measured by a coefficient of variation exceeding 0.8). In practice, the application of this standard affects 60 percent of mental health conditions and substance use disorders, but only 30 percent of medical/surgical conditions.

(ii) *Conclusion.* In this *Example 2,* the plan complies with the rules of this paragraph (c)(4) because the evidentiary standard used by the plan is applied no more stringently for mental health and substance use disorder benefits than for medical/surgical benefits, even though it results in an overall difference in the application of concurrent review for mental health conditions or substance use disorders than for medical/surgical conditions.

Example 3. (i) *Facts.* A plan requires prior approval that a course of treatment is medically necessary for outpatient, in-network medical/surgical, mental health, and substance use disorder benefits and uses comparable criteria in determining whether a course of treatment is medically necessary. For mental health and substance use disorder treatments that do not have prior approval, no benefits will be paid; for medical/surgical treatments that do not have prior approval, there will only be a 25 percent reduction in the benefits the plan would otherwise pay.

(ii) *Conclusion.* In this *Example 3,* the plan violates the rules of this paragraph (c)(4). Although the same nonquantitative treatment limitation—medical necessity—is applied both to mental health and substance use disorder benefits and to medical/surgical benefits for outpatient, in-network services, it is not applied in a comparable way. The penalty for failure to obtain prior approval for mental health and substance use disorder benefits is not comparable to the penalty for failure to obtain prior approval for medical/surgical benefits.

Example 4. (i) *Facts.* A plan generally covers medically appropriate treatments. For both medical/surgical benefits and mental health and substance use disorder benefits, evidentiary standards used in determining whether a treatment is medically appropriate (such as the number of visits or days of coverage) are based on recommendations made by panels of experts with appropriate training and experience in the fields of medicine involved. The evidentiary standards are applied in a manner that is based on clinically appropriate standards of care for a condition.

(ii) *Conclusion.* In this *Example 4,* the plan complies with the rules of this paragraph (c)(4) because the processes for developing the evidentiary standards used to determine medical appropriateness and the application of these standards to mental health and substance use disorder benefits are comparable to and are applied no more stringently than for medical/surgical benefits. This is the result even if the application of the evidentiary standards does not result in similar numbers of visits, days of coverage, or other benefits utilized for mental health conditions or substance use disorders as it does for any particular medical/surgical condition.

Example 5. (i) *Facts.* A plan generally covers medically appropriate treatments. In determining whether prescription drugs are medically appropriate, the plan automatically excludes coverage for antidepressant drugs that are given a black box warning label by the Food and Drug Administration (indicating the drug carries a significant risk of serious adverse effects). For other drugs with a black box warning (including those prescribed for other mental health conditions and substance use disorders, as well as for medical/surgical conditions), the plan will provide coverage if the prescribing physician obtains authorization from the plan that the drug is medically appropriate for the individual, based on clinically appropriate standards of care.

(ii) *Conclusion.* In this *Example 5,* the plan violates the rules of this paragraph (c)(4). Although the standard for applying a nonquantitative treatment limitation is the same for both mental health and substance use disorder benefits and medical/surgical benefits—whether a drug has a black box warning—it is not applied in a comparable manner. The plan's unconditional exclusion of antidepressant drugs given a black box warning is not comparable to the conditional exclusion for other drugs with a black box warning.

Example 6. (i) *Facts.* An employer maintains both a major medical plan and an employee assistance program (EAP). The EAP provides, among other benefits, a limited number of mental health or substance use disorder counseling sessions. Participants are eligible for mental health or substance use disorder benefits under the major medical plan only after exhausting the counseling sessions provided by the EAP. No similar exhaustion requirement applies with respect to medical/surgical benefits provided under the major medical plan.

(ii) *Conclusion.* In this *Example 6,* limiting eligibility for mental health and substance use disorder benefits only after EAP benefits are exhausted is a nonquantitative treatment limitation subject to the parity requirements of this paragraph (c). Because no comparable requirement applies to medical/surgical benefits, the requirement may not be applied to mental health or substance use disorder benefits.

Example 7. (i) *Facts.* Training and State licensing requirements often vary among types of providers. A plan applies a general standard that any provider must meet the

highest licensing requirement related to supervised clinical experience under applicable State law in order to participate in the plan's provider network. Therefore, the plan requires master's-level mental health therapists to have post-degree, supervised clinical experience but does not impose this requirement on master's-level general medical providers because the scope of their licensure under applicable State law does require clinical experience. In addition, the plan does not require post-degree, supervised clinical experience for psychiatrists or Ph.D. level psychologists since their licensing already requires supervised training.

(ii) *Conclusion*. In this *Example 7,* the plan complies with the rules of this paragraph (c)(4). The requirement that master's-level mental health therapists must have supervised clinical experience to join the network is permissible, as long as the plan consistently applies the same standard to all providers even though it may have a disparate impact on certain mental health providers.

Example 8. (i) *Facts*. A plan considers a wide array of factors in designing medical management techniques for both mental health and substance use disorder benefits and medical/surgical benefits, such as cost of treatment; high cost growth; variability in cost and quality; elasticity of demand; provider discretion in determining diagnosis, or type or length of treatment; clinical efficacy of any proposed treatment or service; licensing and accreditation of providers; and claim types with a high percentage of fraud. Based on application of these factors in a comparable fashion, prior authorization is required for some (but not all) mental health and substance use disorder benefits, as well as for some medical/surgical benefits, but not for others. For example, the plan requires prior authorization for: outpatient surgery; speech, occupational, physical, cognitive and behavioral therapy extending for more than six months; durable medical equipment; diagnostic imaging; skilled nursing visits; home infusion therapy; coordinated home care; pain management; high-risk prenatal care; delivery by cesarean section; mastectomy; prostate cancer treatment; narcotics prescribed for more than seven days; and all inpatient services beyond 30 days. The evidence considered in developing its medical management techniques includes consideration of a wide array of recognized medical literature and professional standards and protocols (including comparative effectiveness studies and clinical trials). This evidence and how it was used to develop these medical management techniques is also well documented by the plan.

(ii) *Conclusion*. In this *Example 8,* the plan complies with the rules of this paragraph (c)(4). Under the terms of the plan as written and in operation, the processes, strategies, evidentiary standards, and other factors considered by the plan in implementing its prior authorization requirement with respect to mental health and substance use disorder benefits are comparable to, and applied no more stringently than, those applied with respect to medical/surgical benefits.

Example 9. (i) *Facts*. A plan generally covers medically appropriate treatments. The plan automatically excludes coverage for inpatient substance use disorder treatment in any setting outside of a hospital (such as a freestanding or residential treatment center). For inpatient treatment outside of a hospital for other conditions (including freestanding or residential treatment centers prescribed for mental health conditions, as well as for medical/surgical conditions), the plan will provide coverage if the prescribing physician obtains authorization from the plan that the inpatient treatment is medically appropriate for the individual, based on clinically appropriate standards of care.

(ii) *Conclusion*. In this *Example 9,* the plan violates the rules of this paragraph (c)(4). Although the same nonquantitative treatment limitation—medical appropriateness—is applied to both mental health and substance use disorder benefits and medical/surgical benefits, the plan's unconditional exclusion of substance use disorder treatment in any setting outside of a hospital is not comparable to the conditional exclusion of inpatient treatment outside of a hospital for other conditions.

Example 10. (i) *Facts*. A plan generally provides coverage for medically appropriate medical/surgical benefits as well as mental health and substance use disorder benefits. The plan excludes coverage for inpatient, out-of-network treatment of chemical dependency when obtained outside of the State where the policy is written. There is no similar exclusion for medical/surgical benefits within the same classification.

(ii) *Conclusion*. In this Example 10, the plan violates the rules of this paragraph (c)(4). The plan is imposing a nonquantitative treatment limitation that restricts benefits based on geographic location. Because there is no comparable exclusion that applies to medical/surgical benefits, this exclusion may not be applied to mental health or substance use disorder benefits.

Example 11. (i) *Facts*. A plan requires prior authorization for all outpatient mental health and substance use disorder services after the ninth visit and will only approve up to five additional visits per authorization. With respect to outpatient medical/surgical benefits, the plan allows an initial visit without prior authorization. After the initial visit, the plan pre-approves benefits based on the individual treatment plan recommended by the attending provider based on that individual's specific medical condition. There is no explicit, predetermined cap on the

amount of additional visits approved per authorization.

(ii) *Conclusion*. In this *Example 11*, the plan violates the rules of this paragraph (c)(4). Although the same nonquantitative treatment limitation—prior authorization to determine medical appropriateness—is applied to both mental health and substance use disorder benefits and medical/surgical benefits for outpatient services, it is not applied in a comparable way. While the plan is more generous with respect to the number of visits initially provided without pre-authorization for mental health benefits, treating all mental health conditions and substance use disorders in the same manner, while providing for individualized treatment of medical conditions, is not a comparable application of this nonquantitative treatment limitation.

(5) *Exemptions*. The rules of this paragraph (c) do not apply if a group health plan (or health insurance coverage) satisfies the requirements of paragraph (f) or (g) of this section (relating to exemptions for small employers and for increased cost).

(d) *Availability of plan information*—(1) *Criteria for medical necessity determinations*. The criteria for medical necessity determinations made under a group health plan with respect to mental health or substance use disorder benefits (or health insurance coverage offered in connection with the plan with respect to such benefits) must be made available by the plan administrator (or the health insurance issuer offering such coverage) to any current or potential participant, beneficiary, or contracting provider upon request.

(2) *Reason for any denial*. The reason for any denial under a group health plan (or health insurance coverage offered in connection with such plan) of reimbursement or payment for services with respect to mental health or substance use disorder benefits in the case of any participant or beneficiary must be made available by the plan administrator (or the health insurance issuer offering such coverage) to the participant or beneficiary in a form and manner consistent with the requirements of § 2560.503–1 of this chapter for group health plans.

(3) *Provisions of other law*. Compliance with the disclosure requirements in paragraphs (d)(1) and (d)(2) of this section is not determinative of compliance with any other provision of applicable Federal or State law. In particular, in addition to those disclosure requirements, provisions of other applicable law require disclosure of information relevant to medical/surgical, mental health, and substance use disorder benefits. For example, ERISA section 104 and § 2520.104b–1 of this chapter provide that, for plans subject to ERISA, instruments under which the plan is established or operated must generally be furnished to plan participants within 30 days of request. Instruments under which the plan is established or operated include documents with information on medical necessity criteria for both medical/surgical benefits and mental health and substance use disorder benefits, as well as the processes, strategies, evidentiary standards, and other factors used to apply a nonquantitative treatment limitation with respect to medical/surgical benefits and mental health or substance use disorder benefits under the plan. In addition, §§ 2560.503–1 and 2590.715–2719 of this chapter set forth rules regarding claims and appeals, including the right of claimants (or their authorized representative) upon appeal of an adverse benefit determination (or a final internal adverse benefit determination) to be provided upon request and free of charge, reasonable access to and copies of all documents, records, and other information relevant to the claimant's claim for benefits. This includes documents with information on medical necessity criteria for both medical/surgical benefits and mental health and substance use disorder benefits, as well as the processes, strategies, evidentiary standards, and other factors used to apply a nonquantitative treatment limitation with respect to medical/surgical benefits and mental health or substance use disorder benefits under the plan.

(e) *Applicability*—(1) *Group health plans*. The requirements of this section apply to a group health plan offering medical/surgical benefits and mental health or substance use disorder benefits. If, under an arrangement or arrangements to provide medical care benefits by an employer or employee organization (including for this purpose a joint board of trustees of a multiemployer trust affiliated with one or

more multiemployer plans), any participant (or beneficiary) can simultaneously receive coverage for medical/surgical benefits and coverage for mental health or substance use disorder benefits, then the requirements of this section (including the exemption provisions in paragraph (g) of this section) apply separately with respect to each combination of medical/surgical benefits and of mental health or substance use disorder benefits that any participant (or beneficiary) can simultaneously receive from that employer's or employee organization's arrangement or arrangements to provide medical care benefits, and all such combinations are considered for purposes of this section to be a single group health plan.

(2) *Health insurance issuers.* The requirements of this section apply to a health insurance issuer offering health insurance coverage for mental health or substance use disorder benefits in connection with a group health plan subject to paragraph (e)(1) of this section.

(3) *Scope.* This section does not—

(i) Require a group health plan (or health insurance issuer offering coverage in connection with a group health plan) to provide any mental health benefits or substance use disorder benefits, and the provision of benefits by a plan (or health insurance coverage) for one or more mental health conditions or substance use disorders does not require the plan or health insurance coverage under this section to provide benefits for any other mental health condition or substance use disorder;

(ii) Require a group health plan (or health insurance issuer offering coverage in connection with a group health plan) that provides coverage for mental health or substance use disorder benefits only to the extent required under PHS Act section 2713 to provide additional mental health or substance use disorder benefits in any classification in accordance with this section; or

(iii) Affect the terms and conditions relating to the amount, duration, or scope of mental health or substance use disorder benefits under the plan (or health insurance coverage) except as specifically provided in paragraphs (b) and (c) of this section.

(4) *Coordination with EHB requirements.* Nothing in paragraph (f) or (g) of this section changes the requirements of 45 CFR 147.150 and 45 CFR 156.115, providing that a health insurance issuer offering non-grandfathered health insurance coverage in the individual or small group market providing mental health and substance use disorder services, including behavioral health treatment services, as part of essential health benefits required under 45 CFR 156.110(a)(5) and 156.115(a), must comply with the provisions of 45 CFR 146.136 to satisfy the requirement to provide essential health benefits.

(f) *Small employer exemption*—(1) *In general.* The requirements of this section do not apply to a group health plan (or health insurance issuer offering coverage in connection with a group health plan) for a plan year of a small employer. For purposes of this paragraph (f), the term *small employer* means, in connection with a group health plan with respect to a calendar year and a plan year, an employer who employed an average of at least two (or one in the case of an employer residing in a State that permits small groups to include a single individual) but not more than 50 employees on business days during the preceding calendar year. See section 732(a) of ERISA and § 2590.732(b), which provide that this section (and certain other sections) does not apply to any group health plan (and health insurance issuer offering coverage in connection with a group health plan) for any plan year if, on the first day of the plan year, the plan has fewer than two participants who are current employees.

(2) *Rules in determining employer size.* For purposes of paragraph (f)(1) of this section—

(i) All persons treated as a single employer under subsections (b), (c), (m), and (o) of section 414 of the Code are treated as one employer;

(ii) If an employer was not in existence throughout the preceding calendar year, whether it is a small employer is determined based on the average number of employees the employer

reasonably expects to employ on business days during the current calendar year; and

(iii) Any reference to an employer for purposes of the small employer exemption includes a reference to a predecessor of the employer.

(g) *Increased cost exemption*—(1) *In general*. If the application of this section to a group health plan (or health insurance coverage offered in connection with such plans) results in an increase for the plan year involved of the actual total cost of coverage with respect to medical/surgical benefits and mental health and substance use disorder benefits as determined and certified under paragraph (g)(3) of this section by an amount that exceeds the applicable percentage described in paragraph (g)(2) of this section of the actual total plan costs, the provisions of this section shall not apply to such plan (or coverage) during the following plan year, and such exemption shall apply to the plan (or coverage) for one plan year. An employer or issuer may elect to continue to provide mental health and substance use disorder benefits in compliance with this section with respect to the plan or coverage involved regardless of any increase in total costs.

(2) *Applicable percentage*. With respect to a plan or coverage, the applicable percentage described in this paragraph (g) is—

(i) 2 percent in the case of the first plan year in which this section is applied to the plan or coverage; and

(ii) 1 percent in the case of each subsequent plan year.

(3) *Determinations by actuaries*—(i) Determinations as to increases in actual costs under a plan or coverage that are attributable to implementation of the requirements of this section shall be made and certified by a qualified and licensed actuary who is a member in good standing of the American Academy of Actuaries. All such determinations must be based on the formula specified in paragraph (g)(4) of this section and shall be in a written report prepared by the actuary.

(ii) The written report described in paragraph (g)(3)(i) of this section shall be maintained by the group health plan or health insurance issuer, along with all supporting documentation relied upon by the actuary, for a period of six years following the notification made under paragraph (g)(6) of this section.

(4) *Formula*. The formula to be used to make the determination under paragraph (g)(3)(i) of this section is expressed mathematically as follows:

$$[(E_1 - E_0)/T_0] - D > k$$

(i) E_1 is the actual total cost of coverage with respect to mental health and substance use disorder benefits for the base period, including claims paid by the plan or issuer with respect to mental health and substance use disorder benefits and administrative costs (amortized over time) attributable to providing these benefits consistent with the requirements of this section.

(ii) E_0 is the actual total cost of coverage with respect to mental health and substance use disorder benefits for the length of time immediately before the base period (and that is equal in length to the base period), including claims paid by the plan or issuer with respect to mental health and substance use disorder benefits and administrative costs (amortized over time) attributable to providing these benefits.

(iii) T_0 is the actual total cost of coverage with respect to all benefits during the base period.

(iv) k is the applicable percentage of increased cost specified in paragraph (g)(2) of this section that will be expressed as a fraction for purposes of this formula.

(v) D is the average change in spending that is calculated by applying the formula $(E_1 - E_0)/T_0$ to mental health and substance use disorder spending in each of the five prior years and then calculating the average change in spending.

(5) *Six month determination*. If a group health plan or health insurance issuer seeks an exemption under this paragraph (g), determinations under paragraph (g)(3) of this section shall be made after such plan or coverage has complied with this section for at least the first 6 months of the plan year involved.

(6) *Notification*. A group health plan or health insurance issuer that, based on the certification described under

paragraph (g)(3) of this section, qualifies for an exemption under this paragraph (g), and elects to implement the exemption, must notify participants and beneficiaries covered under the plan, the Secretary, and the appropriate State agencies of such election.

(i) *Participants and beneficiaries*—(A) *Content of notice.* The notice to participants and beneficiaries must include the following information:

(*1*) A statement that the plan or issuer is exempt from the requirements of this section and a description of the basis for the exemption.

(*2*) The name and telephone number of the individual to contact for further information.

(*3*) The plan or issuer name and plan number (PN).

(*4*) The plan administrator's name, address, and telephone number.

(*5*) For single-employer plans, the plan sponsor's name, address, and telephone number (if different from paragraph (g)(6)(i)(A)(*3*) of this section) and the plan sponsor's employer identification number (EIN).

(*6*) The effective date of such exemption.

(*7*) A statement regarding the ability of participants and beneficiaries to contact the plan administrator or health insurance issuer to see how benefits may be affected as a result of the plan's or issuer's election of the exemption.

(*8*) A statement regarding the availability, upon request and free of charge, of a summary of the information on which the exemption is based (as required under paragraph (g)(6)(i)(D) of this section).

(B) *Use of summary of material reductions in covered services or benefits.* A plan or issuer may satisfy the requirements of paragraph (g)(6)(i)(A) of this section by providing participants and beneficiaries (in accordance with paragraph (g)(6)(i)(C) of this section) with a summary of material reductions in covered services or benefits consistent with § 2520.104b–3(d) of this chapter that also includes the information specified in paragraph (g)(6)(i)(A) of this section. However, in all cases, the exemption is not effective until 30 days after notice has been sent.

(C) *Delivery.* The notice described in this paragraph (g)(6)(i) is required to be provided to all participants and beneficiaries. The notice may be furnished by any method of delivery that satisfies the requirements of section 104(b)(1) of ERISA (29 U.S.C. 1024(b)(1)) and its implementing regulations (for example, first-class mail). If the notice is provided to the participant and any beneficiaries at the participant's last known address, then the requirements of this paragraph (g)(6)(i) are satisfied with respect to the participant and all beneficiaries residing at that address. If a beneficiary's last known address is different from the participant's last known address, a separate notice is required to be provided to the beneficiary at the beneficiary's last known address.

(D) *Availability of documentation.* The plan or issuer must make available to participants and beneficiaries (or their representatives), on request and at no charge, a summary of the information on which the exemption was based. (For purposes of this paragraph (g), an individual who is not a participant or beneficiary and who presents a notice described in paragraph (g)(6)(i) of this section is considered to be a representative. A representative may request the summary of information by providing the plan a copy of the notice provided to the participant under paragraph (g)(6)(i) of this section with any personally identifiable information redacted.) The summary of information must include the incurred expenditures, the base period, the dollar amount of claims incurred during the base period that would have been denied under the terms of the plan or coverage absent amendments required to comply with paragraphs (b) and (c) of this section, the administrative costs related to those claims, and other administrative costs attributable to complying with the requirements of this section. In no event should the summary of information include any personally identifiable information.

(ii) *Federal agencies*—(A) *Content of notice.* The notice to the Secretary must include the following information:

(*1*) A description of the number of covered lives under the plan (or coverage) involved at the time of the notification, and as applicable, at the time of any prior election of the cost exemption under this paragraph (g) by such plan (or coverage);

(*2*) For both the plan year upon which a cost exemption is sought and the year prior, a description of the actual total costs of coverage with respect to medical/surgical benefits and mental health and substance use disorder benefits; and

(*3*) For both the plan year upon which a cost exemption is sought and the year prior, the actual total costs of coverage with respect to mental health and substance use disorder benefits under the plan.

(B) *Reporting*. A group health plan, and any health insurance coverage offered in connection with a group health plan, must provide notice to the Department of Labor. This requirement is satisfied if the plan sends a copy, to the address designated by the Secretary in generally applicable guidance, of the notice described in paragraph (g)(6)(ii)(A) of this section identifying the benefit package to which the exemption applies.

(iii) *Confidentiality*. A notification to the Secretary under this paragraph (g)(6) shall be confidential. The Secretary shall make available, upon request and not more than on an annual basis, an anonymous itemization of each notification that includes—

(A) A breakdown of States by the size and type of employers submitting such notification; and

(B) A summary of the data received under paragraph (g)(6)(ii) of this section.

(iv) *Audits*. The Secretary may audit the books and records of a group health plan or a health insurance issuer relating to an exemption, including any actuarial reports, during the 6 year period following notification of such exemption under paragraph (g)(6) of this section. A State agency receiving a notification under paragraph (g)(6) of this section may also conduct such an audit with respect to an exemption covered by such notification.

(h) *Sale of nonparity health insurance coverage*. A health insurance issuer may not sell a policy, certificate, or contract of insurance that fails to comply with paragraph (b) or (c) of this section, except to a plan for a year for which the plan is exempt from the requirements of this section because the plan meets the requirements of paragraph (f) or (g) of this section.

(i) *Applicability dates*—(1) *In general*. Except as provided in paragraph (i)(2) of this section, this section applies to group health plans and health insurance issuers offering group health insurance coverage on the first day of the first plan year beginning on or after July 1, 2014. Until the applicability date, plans and issuers are required to continue to comply with the corresponding sections of 29 CFR 2590.712 contained in the 29 CFR, parts 1927 to end, edition revised as of July 1, 2013.

(2) *Special effective date for certain collectively-bargained plans*. For a group health plan maintained pursuant to one or more collective bargaining agreements ratified before October 3, 2008, the requirements of this section do not apply to the plan (or health insurance coverage offered in connection with the plan) for plan years beginning before the date on which the last of the collective bargaining agreements terminates (determined without regard to any extension agreed to after October 3, 2008).

[78 FR 68276, Nov. 13, 2013]

§ 2590.715–1251 Preservation of right to maintain existing coverage.

(a) *Definition of grandfathered health plan coverage*—(1) *In general*—(i) *Grandfathered health plan coverage*. *Grandfathered health plan coverage* means coverage provided by a group health plan, or a health insurance issuer, in which an individual was enrolled on March 23, 2010 (for as long as it maintains that status under the rules of this section). A group health plan or group health insurance coverage does not cease to be grandfathered health plan coverage merely because one or more (or even all) individuals enrolled on March 23, 2010 cease to be covered, provided that the plan has continuously covered someone since March 23, 2010 (not necessarily the same person, but at all times at least one person). In addition, subject to the limitation set forth in

paragraph (a)(1)(ii) of this section, a group health plan (and any health insurance coverage offered in connection with the group health plan) does not cease to be a grandfathered health plan merely because the plan (or its sponsor) enters into a new policy, certificate, or contract of insurance after March 23, 2010 (for example, a plan enters into a contract with a new issuer or a new policy is issued with an existing issuer). For purposes of this section, a plan or health insurance coverage that provides grandfathered health plan coverage is referred to as a grandfathered health plan. The rules of this section apply separately to each benefit package made available under a group health plan or health insurance coverage.

(ii) *Changes in group health insurance coverage.* Subject to paragraphs (f) and (g)(2) of this section, if a group health plan (including a group health plan that was self-insured on March 23, 2010) or its sponsor enters into a new policy, certificate, or contract of insurance after March 23, 2010 that is effective before November 15, 2010, then the plan ceases to be a grandfathered health plan.

(2) *Disclosure of grandfather status*—(i) To maintain status as a grandfathered health plan, a plan or health insurance coverage must include a statement, in any plan materials provided to a participant or beneficiary describing the benefits provided under the plan or health insurance coverage, that the plan or coverage believes it is a grandfathered health plan within the meaning of section 1251 of the Patient Protection and Affordable Care Act and must provide contact information for questions and complaints.

(ii) The following model language can be used to satisfy this disclosure requirement:

This [group health plan or health insurance issuer] believes this [plan or coverage] is a ''grandfathered health plan'' under the Patient Protection and Affordable Care Act (the Affordable Care Act). As permitted by the Affordable Care Act, a grandfathered health plan can preserve certain basic health coverage that was already in effect when that law was enacted. Being a grandfathered health plan means that your [plan or policy] may not include certain consumer protections of the Affordable Care Act that apply to other plans, for example, the requirement for the provision of preventive health services without any cost sharing. However, grandfathered health plans must comply with certain other consumer protections in the Affordable Care Act, for example, the elimination of lifetime limits on benefits.

Questions regarding which protections apply and which protections do not apply to a grandfathered health plan and what might cause a plan to change from grandfathered health plan status can be directed to the plan administrator at [insert contact information]. [For ERISA plans, insert: You may also contact the Employee Benefits Security Administration, U.S. Department of Labor at 1–866–444–3272 or *www.dol.gov/ebsa/healthreform*. This Web site has a table summarizing which protections do and do not apply to grandfathered health plans.] [For individual market policies and nonfederal governmental plans, insert: You may also contact the U.S. Department of Health and Human Services at *www.healthreform.gov*.]

(3)(i) *Documentation of plan or policy terms on March 23, 2010.* To maintain status as a grandfathered health plan, a group health plan, or group health insurance coverage, must, for as long as the plan or health insurance coverage takes the position that it is a grandfathered health plan—

(i)(A) Maintain records documenting the terms of the plan or health insurance coverage in connection with the coverage in effect on March 23, 2010, and any other documents necessary to verify, explain, or clarify its status as a grandfathered health plan; and

(i)(B) Make such records available for examination upon request.

(ii) *Change in group health insurance coverage.* To maintain status as a grandfathered health plan, a group health plan that enters into a new policy, certificate, or contract of insurance must provide to the new health insurance issuer (and the new health insurance issuer must require) documentation of plan terms (including benefits, cost sharing, employer contributions, and annual limits) under the prior health coverage sufficient to determine whether a change causing a cessation of grandfathered health plan status under paragraph (g)(1) of this section has occurred.

(4) *Family members enrolling after March 23, 2010.* With respect to an individual who is enrolled in a group

health plan or health insurance coverage on March 23, 2010, grandfathered health plan coverage includes coverage of family members of the individual who enroll after March 23, 2010 in the grandfathered health plan coverage of the individual.

(b) *Allowance for new employees to join current plan*—(1) *In general.* Subject to paragraph (b)(2) of this section, a group health plan (including health insurance coverage provided in connection with the group health plan) that provided coverage on March 23, 2010 and has retained its status as a grandfathered health plan (consistent with the rules of this section, including paragraph (g) of this section) is grandfathered health plan coverage for new employees (whether newly hired or newly enrolled) and their families enrolling in the plan after March 23, 2010.

(2) *Anti-abuse rules*—(i) *Mergers and acquisitions.* If the principal purpose of a merger, acquisition, or similar business restructuring is to cover new individuals under a grandfathered health plan, the plan ceases to be a grandfathered health plan.

(ii) *Change in plan eligibility.* A group health plan or health insurance coverage (including a benefit package under a group health plan) ceases to be a grandfathered health plan if—

(A) Employees are transferred into the plan or health insurance coverage (the transferee plan) from a plan or health insurance coverage under which the employees were covered on March 23, 2010 (the transferor plan);

(B) Comparing the terms of the transferee plan with those of the transferor plan (as in effect on March 23, 2010) and treating the transferee plan as if it were an amendment of the transferor plan would cause a loss of grandfather status under the provisions of paragraph (g)(1) of this section; and

(C) There was no bona fide employment-based reason to transfer the employees into the transferee plan. For this purpose, changing the terms or cost of coverage is not a bona fide employment-based reason.

(3) *Examples.* The rules of this paragraph (b) are illustrated by the following examples:

Example 1. (i) *Facts.* A group health plan offers two benefit packages on March 23, 2010, Options *F* and *G*. During a subsequent open enrollment period, some of the employees enrolled in Option *F* on March 23, 2010 switch to Option *G*.

(ii) *Conclusion.* In this *Example 1*, the group health coverage provided under Option *G* remains a grandfathered health plan under the rules of paragraph (b)(1) of this section because employees previously enrolled in Option *F* are allowed to enroll in Option *G* as new employees.

Example 2. (i) *Facts.* Same facts as *Example 1*, except that the plan sponsor eliminates Option *F* because of its high cost and transfers employees covered under Option *F* to Option *G*. If instead of transferring employees from Option *F* to Option *G*, Option *F* was amended to match the terms of Option *G*, then Option *F* would cease to be a grandfathered health plan.

(ii) *Conclusion.* In this *Example 2*, the plan did not have a bona fide employment-based reason to transfer employees from Option *F* to Option *G*. Therefore, Option *G* ceases to be a grandfathered health plan with respect to all employees. (However, any other benefit package maintained by the plan sponsor is analyzed separately under the rules of this section.)

Example 3. (i) *Facts.* A group health plan offers two benefit packages on March 23, 2010, Options *H* and *I*. On March 23, 2010, Option *H* provides coverage only for employees in one manufacturing plant. Subsequently, the plant is closed, and some employees in the closed plant are moved to another plant. The employer eliminates Option *H* and the employees that are moved are transferred to Option *I*. If instead of transferring employees from Option *H* to Option *I*, Option *H* was amended to match the terms of Option *I*, then Option *H* would cease to be a grandfathered health plan.

(ii) *Conclusion.* In this *Example 3*, the plan has a bona fide employment-based reason to transfer employees from Option *H* to Option *I*. Therefore, Option *I* does not cease to be a grandfathered health plan.

(c) *General grandfathering rule*—(1) Except as provided in paragraphs (d) and (e) of this section, subtitles A and C of title I of the Patient Protection and Affordable Care Act (and the amendments made by those subtitles, and the incorporation of those amendments into ERISA section 715 and Internal Revenue Code section 9815) do not apply to grandfathered health plan coverage. Accordingly, the provisions of PHS Act sections 2701, 2702, 2703, 2705, 2706, 2707, 2709 (relating to coverage for individuals participating in

approved clinical trials, as added by section 10103 of the Patient Protection and Affordable Care Act), 2713, 2715A, 2716, 2717, 2719, and 2719A, as added or amended by the Patient Protection and Affordable Care Act, do not apply to grandfathered health plans. (In addition, *see* 45 CFR 147.140(c), which provides that the provisions of PHS Act section 2704, and PHS Act section 2711 insofar as it relates to annual limits, do not apply to grandfathered health plans that are individual health insurance coverage.)

(2) To the extent not inconsistent with the rules applicable to a grandfathered health plan, a grandfathered health plan must comply with the requirements of the PHS Act, ERISA, and the Internal Revenue Code applicable prior to the changes enacted by the Patient Protection and Affordable Care Act.

(d) *Provisions applicable to all grandfathered health plans.* The provisions of PHS Act section 2711 insofar as it relates to lifetime limits, and the provisions of PHS Act sections 2712, 2714, 2715, and 2718, apply to grandfathered health plans for plan years beginning on or after September 23, 2010. The provisions of PHS Act section 2708 apply to grandfathered health plans for plan years beginning on or after January 1, 2014.

(e) *Applicability of PHS Act sections 2704, 2711, and 2714 to grandfathered group health plans and group health insurance coverage*—(1) The provisions of PHS Act section 2704 as it applies with respect to enrollees who are under 19 years of age, and the provisions of PHS Act section 2711 insofar as it relates to annual limits, apply to grandfathered health plans that are group health plans (including group health insurance coverage) for plan years beginning on or after September 23, 2010. The provisions of PHS Act section 2704 apply generally to grandfathered health plans that are group health plans (including group health insurance coverage) for plan years beginning on or after January 1, 2014.

(2) For plan years beginning before January 1, 2014, the provisions of PHS Act section 2714 apply in the case of an adult child with respect to a grandfathered health plan that is a group health plan only if the adult child is not eligible to enroll in an eligible employer-sponsored health plan (as defined in section 5000A(f)(2) of the Internal Revenue Code) other than a grandfathered health plan of a parent. For plan years beginning on or after January 1, 2014, the provisions of PHS Act section 2714 apply with respect to a grandfathered health plan that is a group health plan without regard to whether an adult child is eligible to enroll in any other coverage.

(f) *Effect on collectively bargained plans—In general.* In the case of health insurance coverage maintained pursuant to one or more collective bargaining agreements between employee representatives and one or more employers that was ratified before March 23, 2010, the coverage is grandfathered health plan coverage at least until the date on which the last of the collective bargaining agreements relating to the coverage that was in effect on March 23, 2010 terminates. Any coverage amendment made pursuant to a collective bargaining agreement relating to the coverage that amends the coverage solely to conform to any requirement added by subtitles A and C of title I of the Patient Protection and Affordable Care Act (and the amendments made by those subtitles, and the incorporation of those amendments into ERISA section 715 and Internal Revenue Code section 9815) is not treated as a termination of the collective bargaining agreement. After the date on which the last of the collective bargaining agreements relating to the coverage that was in effect on March 23, 2010 terminates, the determination of whether health insurance coverage maintained pursuant to a collective bargaining agreement is grandfathered health plan coverage is made under the rules of this section other than this paragraph (f) (comparing the terms of the health insurance coverage after the date the last collective bargaining agreement terminates with the terms of the health insurance coverage that were in effect on March 23, 2010).

(g) *Maintenance of grandfather status*—(1) *Changes causing cessation of grandfather status.* Subject to paragraph (g)(2) of this section, the rules of

this paragraph (g)(1) describe situations in which a group health plan or health insurance coverage ceases to be a grandfathered health plan.

(i) *Elimination of benefits.* The elimination of all or substantially all benefits to diagnose or treat a particular condition causes a group health plan or health insurance coverage to cease to be a grandfathered health plan. For this purpose, the elimination of benefits for any necessary element to diagnose or treat a condition is considered the elimination of all or substantially all benefits to diagnose or treat a particular condition.

(ii) *Increase in percentage cost-sharing requirement.* Any increase, measured from March 23, 2010, in a percentage cost-sharing requirement (such as an individual's coinsurance requirement) causes a group health plan or health insurance coverage to cease to be a grandfathered health plan.

(iii) *Increase in a fixed-amount cost-sharing requirement other than a copayment.* Any increase in a fixed-amount cost-sharing requirement other than a copayment (for example, deductible or out-of-pocket limit), determined as of the effective date of the increase, causes a group health plan or health insurance coverage to cease to be a grandfathered health plan, if the total percentage increase in the cost-sharing requirement measured from March 23, 2010 exceeds the maximum percentage increase (as defined in paragraph (g)(3)(ii) of this section).

(iv) *Increase in a fixed-amount copayment.* Any increase in a fixed-amount copayment, determined as of the effective date of the increase, causes a group health plan or health insurance coverage to cease to be a grandfathered health plan, if the total increase in the copayment measured from March 23, 2010 exceeds the greater of:

(A) An amount equal to $5 increased by medical inflation, as defined in paragraph (g)(3)(i) of this section (that is, $5 times medical inflation, plus $5), or

(B) The maximum percentage increase (as defined in paragraph (g)(3)(ii) of this section), determined by expressing the total increase in the copayment as a percentage.

(v) *Decrease in contribution rate by employers and employee organizations*—(A) *Contribution rate based on cost of coverage.* A group health plan or group health insurance coverage ceases to be a grandfathered health plan if the employer or employee organization decreases its contribution rate based on cost of coverage (as defined in paragraph (g)(3)(iii)(A) of this section) towards the cost of any tier of coverage for any class of similarly situated individuals (as described in § 2590.702(d) of this part) by more than 5 percentage points below the contribution rate for the coverage period that includes March 23, 2010.

(B) *Contribution rate based on a formula.* A group health plan or group health insurance coverage ceases to be a grandfathered health plan if the employer or employee organization decreases its contribution rate based on a formula (as defined in paragraph (g)(3)(iii)(B) of this section) towards the cost of any tier of coverage for any class of similarly situated individuals (as described in section 2590.702(d) of this part) by more than 5 percent below the contribution rate for the coverage period that includes March 23, 2010.

(vi) *Changes in annual limits*—(A) *Addition of an annual limit.* A group health plan, or group health insurance coverage, that, on March 23, 2010, did not impose an overall annual or lifetime limit on the dollar value of all benefits ceases to be a grandfathered health plan if the plan or health insurance coverage imposes an overall annual limit on the dollar value of benefits.

(B) *Decrease in limit for a plan or coverage with only a lifetime limit.* A group health plan, or group health insurance coverage, that, on March 23, 2010, imposed an overall lifetime limit on the dollar value of all benefits but no overall annual limit on the dollar value of all benefits ceases to be a grandfathered health plan if the plan or health insurance coverage adopts an overall annual limit at a dollar value that is lower than the dollar value of the lifetime limit on March 23, 2010.

(C) *Decrease in limit for a plan or coverage with an annual limit.* A group health plan, or group health insurance coverage, that, on March 23, 2010, imposed an overall annual limit on the

dollar value of all benefits ceases to be a grandfathered health plan if the plan or health insurance coverage decreases the dollar value of the annual limit (regardless of whether the plan or health insurance coverage also imposed an overall lifetime limit on March 23, 2010 on the dollar value of all benefits).

(2) *Transitional rules*—(i) *Changes made prior to March 23, 2010*. If a group health plan or health insurance issuer makes the following changes to the terms of the plan or health insurance coverage, the changes are considered part of the terms of the plan or health insurance coverage on March 23, 2010 even though they were not effective at that time and such changes do not cause a plan or health insurance coverage to cease to be a grandfathered health plan:

(A) Changes effective after March 23, 2010 pursuant to a legally binding contract entered into on or before March 23, 2010;

(B) Changes effective after March 23, 2010 pursuant to a filing on or before March 23, 2010 with a State insurance department; or

(C) Changes effective after March 23, 2010 pursuant to written amendments to a plan that were adopted on or before March 23, 2010.

(ii) *Changes made after March 23, 2010 and adopted prior to issuance of regulations*. If, after March 23, 2010, a group health plan or health insurance issuer makes changes to the terms of the plan or health insurance coverage and the changes are adopted prior to June 14, 2010, the changes will not cause the plan or health insurance coverage to cease to be a grandfathered health plan if the changes are revoked or modified effective as of the first day of the first plan year (in the individual market, policy year) beginning on or after September 23, 2010, and the terms of the plan or health insurance coverage on that date, as modified, would not cause the plan or coverage to cease to be a grandfathered health plan under the rules of this section, including paragraph (g)(1) of this section. For this purpose, changes will be considered to have been adopted prior to June 14, 2010 if:

(A) The changes are effective before that date;

(B) The changes are effective on or after that date pursuant to a legally binding contract entered into before that date;

(C) The changes are effective on or after that date pursuant to a filing before that date with a State insurance department; or

(D) The changes are effective on or after that date pursuant to written amendments to a plan that were adopted before that date.

(3) *Definitions*—(i) *Medical inflation defined*. For purposes of this paragraph (g), the term *medical inflation* means the increase since March 2010 in the overall medical care component of the Consumer Price Index for All Urban Consumers (CPI–U) (unadjusted) published by the Department of Labor using the 1982–1984 base of 100. For this purpose, the increase in the overall medical care component is computed by subtracting 387.142 (the overall medical care component of the CPI–U (unadjusted) published by the Department of Labor for March 2010, using the 1982–1984 base of 100) from the index amount for any month in the 12 months before the new change is to take effect and then dividing that amount by 387.142.

(ii) *Maximum percentage increase defined*. For purposes of this paragraph (g), the term *maximum percentage increase* means medical inflation (as defined in paragraph (g)(3)(i) of this section), expressed as a percentage, plus 15 percentage points.

(iii) *Contribution rate defined*. For purposes of paragraph (g)(1)(v) of this section:

(A) *Contribution rate based on cost of coverage*. The term *contribution rate based on cost of coverage* means the amount of contributions made by an employer or employee organization compared to the total cost of coverage, expressed as a percentage. The total cost of coverage is determined in the same manner as the applicable premium is calculated under the COBRA continuation provisions of section 604 of ERISA, section 4980B(f)(4) of the Internal Revenue Code, and section 2204 of the PHS Act. In the case of a self-insured plan, contributions by an employer or employee organization are equal to the total cost of coverage

minus the employee contributions towards the total cost of coverage.

(B) *Contribution rate based on a formula.* The term *contribution rate based on a formula* means, for plans that, on March 23, 2010, made contributions based on a formula (such as hours worked or tons of coal mined), the formula.

(4) *Examples.* The rules of this paragraph (g) are illustrated by the following examples:

Example 1. (i) *Facts.* On March 23, 2010, a grandfathered health plan has a coinsurance requirement of 20% for inpatient surgery. The plan is subsequently amended to increase the coinsurance requirement to 25%.

(ii) *Conclusion.* In this *Example 1,* the increase in the coinsurance requirement from 20% to 25% causes the plan to cease to be a grandfathered health plan.

Example 2. (i) *Facts.* Before March 23, 2010, the terms of a group health plan provide benefits for a particular mental health condition, the treatment for which is a combination of counseling and prescription drugs. Subsequently, the plan eliminates benefits for counseling.

(ii) *Conclusion.* In this *Example 2,* the plan ceases to be a grandfathered health plan because counseling is an element that is necessary to treat the condition. Thus the plan is considered to have eliminated substantially all benefits for the treatment of the condition.

Example 3. (i) *Facts.* On March 23, 2010, a grandfathered health plan has a copayment requirement of $30 per office visit for specialists. The plan is subsequently amended to increase the copayment requirement to $40. Within the 12-month period before the $40 copayment takes effect, the greatest value of the overall medical care component of the CPI–U (unadjusted) is 475.

(ii) *Conclusion.* In this *Example 3,* the increase in the copayment from $30 to $40, expressed as a percentage, is 33.33% (40 − 30 = 10; 10 ÷ 30 = 0.3333; 0.3333 = 33.33%). Medical inflation (as defined in paragraph (g)(3)(i) of this section) from March 2010 is 0.2269 (475 − 387.142 = 87.858; 87.858 ÷ 387.142 = 0.2269). The maximum percentage increase permitted is 37.69% (0.2269 = 22.69%; 22.69% + 15% = 37.69%). Because 33.33% does not exceed 37.69%, the change in the copayment requirement at that time does not cause the plan to cease to be a grandfathered health plan.

Example 4. (i) *Facts.* Same facts as *Example 3,* except the grandfathered health plan subsequently increases the $40 copayment requirement to $45 for a later plan year. Within the 12-month period before the $45 copayment takes effect, the greatest value of the overall medical care component of the CPI–U (unadjusted) is 485.

(ii) *Conclusion.* In this *Example 4,* the increase in the copayment from $30 (the copayment that was in effect on March 23, 2010) to $45, expressed as a percentage, is 50% (45 − 30 = 15; 15 ÷ 30 = 0.5; 0.5 = 50%). Medical inflation (as defined in paragraph (g)(3)(i) of this section) from March 2010 is 0.2527 (485 − 387.142 = 97.858; 97.858 ÷ 387.142 = 0.2527). The increase that would cause a plan to cease to be a grandfathered health plan under paragraph (g)(1)(iv) of this section is the greater of the maximum percentage increase of 40.27% (0.2527 = 25.27%; 25.27% + 15% = 40.27%), or $6.26 ($5 × 0.2527 = $1.26; $1.26 + $5 = $6.26). Because 50% exceeds 40.27% and $15 exceeds $6.26, the change in the copayment requirement at that time causes the plan to cease to be a grandfathered health plan.

Example 5. (i) *Facts.* On March 23, 2010, a grandfathered health plan has a copayment of $10 per office visit for primary care providers. The plan is subsequently amended to increase the copayment requirement to $15. Within the 12-month period before the $15 copayment takes effect, the greatest value of the overall medical care component of the CPI–U (unadjusted) is 415.

(ii) *Conclusion.* In this *Example 5,* the increase in the copayment, expressed as a percentage, is 50% (15 − 10 = 5; 5 ÷ 10 = 0.5; 0.5 = 50%). Medical inflation (as defined in paragraph (g)(3) of this section) from March 2010 is 0.0720 (415.0 − 387.142 = 27.858; 27.858 ÷ 387.142 = 0.0720). The increase that would cause a plan to cease to be a grandfathered health plan under paragraph (g)(1)(iv) of this section is the greater of the maximum percentage increase of 22.20% (0.0720 = 7.20%; 7.20% + 15% = 22.20), or $5.36 ($5 × 0.0720 = $0.36; $0.36 + $5 = $5.36). The $5 increase in copayment in this *Example 5* would not cause the plan to cease to be a grandfathered health plan pursuant to paragraph (g)(1)(iv) of this section, which would permit an increase in the copayment of up to $5.36.

Example 6. (i) *Facts.* The same facts as *Example 5,* except on March 23, 2010, the grandfathered health plan has no copayment ($0) for office visits for primary care providers. The plan is subsequently amended to increase the copayment requirement to $5.

(ii) *Conclusion.* In this *Example 6,* medical inflation (as defined in paragraph (g)(3)(i) of this section) from March 2010 is 0.0720 (415.0 − 387.142 = 27.858; 27.858 ÷ 387.142 = 0.0720). The increase that would cause a plan to cease to be a grandfathered health plan under paragraph (g)(1)(iv)(A) of this section is $5.36 ($5 × 0.0720 = $0.36; $0.36 + $5 = $5.36). The $5 increase in copayment in this *Example 6* is less than the amount calculated pursuant to paragraph (g)(1)(iv)(A) of this section of $5.36. Thus, the $5 increase in copayment does not cause the plan to cease to be a grandfathered health plan.

Example 7. (i) *Facts.* On March 23, 2010, a self-insured group health plan provides two

tiers of coverage—self-only and family. The employer contributes 80% of the total cost of coverage for self-only and 60% of the total cost of coverage for family. Subsequently, the employer reduces the contribution to 50% for family coverage, but keeps the same contribution rate for self-only coverage.

(ii) *Conclusion*. In this *Example 7*, the decrease of 10 percentage points for family coverage in the contribution rate based on cost of coverage causes the plan to cease to be a grandfathered health plan. The fact that the contribution rate for self-only coverage remains the same does not change the result.

Example 8. (i) *Facts*. On March 23, 2010, a self-insured grandfathered health plan has a COBRA premium for the 2010 plan year of $5000 for self-only coverage and $12,000 for family coverage. The required employee contribution for the coverage is $1000 for self-only coverage and $4000 for family coverage. Thus, the contribution rate based on cost of coverage for 2010 is 80% ((5000—1000)/5000) for self-only coverage and 67% ((12,000–4000)/12,000) for family coverage. For a subsequent plan year, the COBRA premium is $6000 for self-only coverage and $15,000 for family coverage. The employee contributions for that plan year are $1200 for self-only coverage and $5000 for family coverage. Thus, the contribution rate based on cost of coverage is 80% ((6000–1200)/6000) for self-only coverage and 67% ((15,000–5000)/15,000) for family coverage.

(ii) *Conclusion*. In this *Example 8*, because there is no change in the contribution rate based on cost of coverage, the plan retains its status as a grandfathered health plan. The result would be the same if all or part of the employee contribution was made pre-tax through a cafeteria plan under section 125 of the Internal Revenue Code.

Example 9. (i) *Facts*. A group health plan not maintained pursuant to a collective bargaining agreement offers three benefit packages on March 23, 2010. Option *F* is a self-insured option. Options *G* and *H* are insured options. Beginning July 1, 2013, the plan increases coinsurance under Option *H* from 10% to 15%.

(ii) *Conclusion*. In this *Example 9*, the coverage under Option *H* is not grandfathered health plan coverage as of July 1, 2013, consistent with the rule in paragraph (g)(1)(ii) of this section. Whether the coverage under Options *F* and *G* is grandfathered health plan coverage is determined separately under the rules of this paragraph (g).

[75 FR 34562, June 17, 2010, as amended at 75 FR 70121, Nov. 17, 2010]

§ 2590.715–2704 Prohibition of preexisting condition exclusions.

(a) *No preexisting condition exclusions*—(1) *In general*. A group health plan, or a health insurance issuer offering group health insurance coverage, may not impose any preexisting condition exclusion (as defined in § 2590.701–2 of this part).

(2) *Examples*. The rules of this paragraph (a) are illustrated by the following examples (for additional examples illustrating the definition of a preexisting condition exclusion, *see* § 2590.701–3(a)(1)(ii) of this part):

Example 1. (i) *Facts*. A group health plan provides benefits solely through an insurance policy offered by Issuer *P*. At the expiration of the policy, the plan switches coverage to a policy offered by Issuer *N*. *N*'s policy excludes benefits for oral surgery required as a result of a traumatic injury if the injury occurred before the effective date of coverage under the policy.

(ii) *Conclusion*. In this *Example 1*, the exclusion of benefits for oral surgery required as a result of a traumatic injury if the injury occurred before the effective date of coverage is a preexisting condition exclusion because it operates to exclude benefits for a condition based on the fact that the condition was present before the effective date of coverage under the policy.

Example 2. (i) *Facts*. Individual *C* applies for individual health insurance coverage with Issuer *M*. *M* denies *C*'s application for coverage because a pre-enrollment physical revealed that *C* has type 2 diabetes.

(ii) *Conclusion*. See *Example 2* in 45 CFR 147.108(a)(2) for a conclusion that *M*'s denial of *C*'s application for coverage is a preexisting condition exclusion because a denial of an application for coverage based on the fact that a condition was present before the date of denial is an exclusion of benefits based on a preexisting condition.

(b) *Applicability*—(1) *General applicability date*. Except as provided in paragraph (b)(2) of this section, the rules of this section apply for plan years beginning on or after January 1, 2014.

(2) *Early applicability date for children*. The rules of this section apply with respect to enrollees, including applicants for enrollment, who are under 19 years of age for plan years beginning on or after September 23, 2010.

(3) *Applicability to grandfathered health plans*. *See* § 2590.715–1251 of this part for determining the application of this section to grandfathered health plans (providing that a grandfathered health plan that is a group health plan or group health insurance coverage must comply with the prohibition against preexisting condition exclusions).

(4) *Example*. The rules of this paragraph (b) are illustrated by the following example:

Example. (i) *Facts*. Individual *F* commences employment and enrolls *F* and *F*'s 16-year-old child in the group health plan maintained by *F*'s employer, with a first day of coverage of October 15, 2010. *F*'s child had a significant break in coverage because of a lapse of more than 63 days without creditable coverage immediately prior to enrolling in the plan. *F*'s child was treated for asthma within the six-month period prior to the enrollment date and the plan imposes a 12-month preexisting condition exclusion for coverage of asthma. The next plan year begins on January 1, 2011.

(ii) *Conclusion*. In this *Example*, the plan year beginning January 1, 2011 is the first plan year of the group health plan beginning on or after September 23, 2010. Thus, beginning on January 1, 2011, because the child is under 19 years of age, the plan cannot impose a preexisting condition exclusion with respect to the child's asthma regardless of the fact that the preexisting condition exclusion was imposed by the plan before the applicability date of this provision.

[75 FR 37229, June 28, 2010]

§ 2590.715–2705 Prohibiting discrimination against participants and beneficiaries based on a health factor.

(a) *In general*. A group health plan and a health insurance issuer offering group health insurance coverage must comply with the requirements of § 2590.702 of this part.

(b) *Applicability date*. This section is applicable to group health plans and health insurance issuers offering group health insurance coverage for plan years beginning on or after January 1, 2014.

[78 FR 33186, June 3, 2013]

§ 2590.715–2708 Prohibition on waiting periods that exceed 90 days.

(a) *General rule*. A group health plan, and a health insurance issuer offering group health insurance coverage, must not apply any waiting period that exceeds 90 days, in accordance with the rules of this section. If, under the terms of a plan, an individual can elect coverage that would begin on a date that is not later than the end of the 90-day waiting period, this paragraph (a) is considered satisfied. Accordingly, in that case, a plan or issuer will not be considered to have violated this paragraph (a) solely because individuals take, or are permitted to take, additional time (beyond the end of the 90-day waiting period) to elect coverage.

(b) *Waiting period defined*. For purposes of this part, a waiting period is the period that must pass before coverage for an individual who is otherwise eligible to enroll under the terms of a group health plan can become effective. If an individual enrolls as a late enrollee (as defined under § 2590.701–2) or special enrollee (as described in § 2590.701–6), any period before such late or special enrollment is not a waiting period.

(c) *Relation to a plan's eligibility criteria*—(1) *In general*. Except as provided in paragraphs (c)(2) and (c)(3) of this section, being otherwise eligible to enroll under the terms of a group health plan means having met the plan's substantive eligibility conditions (such as, for example, being in an eligible job classification, achieving job-related licensure requirements specified in the plan's terms, or satisfying a reasonable and bona fide employment-based orientation period). Moreover, except as provided in paragraphs (c)(2) and (c)(3) of this section, nothing in this section requires a plan sponsor to offer coverage to any particular individual or class of individuals (including, for example, part-time employees). Instead, this section prohibits requiring otherwise eligible individuals to wait more than 90 days before coverage is effective. *See also* section 4980H of the Code and its implementing regulations for an applicable large employer's shared responsibility to provide health coverage to full-time employees.

(2) *Eligibility conditions based solely on the lapse of time*. Eligibility conditions that are based solely on the lapse of a time period are permissible for no more than 90 days.

(3) *Other conditions for eligibility*. Other conditions for eligibility under the terms of a group health plan are generally permissible under PHS Act section 2708, unless the condition is designed to avoid compliance with the 90-day waiting period limitation, determined in accordance with the rules of this paragraph (c)(3).

(i) *Application to variable-hour employees in cases in which a specified number of hours of service per period is a plan eligibility condition.* If a group health plan conditions eligibility on an employee regularly having a specified number of hours of service per period (or working full-time), and it cannot be determined that a newly-hired employee is reasonably expected to regularly work that number of hours per period (or work full-time), the plan may take a reasonable period of time, not to exceed 12 months and beginning on any date between the employee's start date and the first day of the first calendar month following the employee's start date, to determine whether the employee meets the plan's eligibility condition. Except in cases in which a waiting period that exceeds 90 days is imposed in addition to a measurement period, the time period for determining whether such an employee meets the plan's eligibility condition will not be considered to be designed to avoid compliance with the 90-day waiting period limitation if coverage is made effective no later than 13 months from the employee's start date plus, if the employee's start date is not the first day of a calendar month, the time remaining until the first day of the next calendar month.

(ii) *Cumulative service requirements.* If a group health plan or health insurance issuer conditions eligibility on an employee's having completed a number of cumulative hours of service, the eligibility condition is not considered to be designed to avoid compliance with the 90-day waiting period limitation if the cumulative hours-of-service requirement does not exceed 1,200 hours.

(d) *Application to rehires.* A plan or issuer may treat an employee whose employment has terminated and who then is rehired as newly eligible upon rehire and, therefore, required to meet the plan's eligibility criteria and waiting period anew, if reasonable under the circumstances (for example, the termination and rehire cannot be a subterfuge to avoid compliance with the 90-day waiting period limitation).

(e) *Counting days.* Under this section, all calendar days are counted beginning on the enrollment date (as defined in § 2590.701–2), including weekends and holidays. A plan or issuer that imposes a 90-day waiting period may, for administrative convenience, choose to permit coverage to become effective earlier than the 91st day if the 91st day is a weekend or holiday.

(f) *Examples.* The rules of this section are illustrated by the following examples:

Example 1. (i) *Facts.* A group health plan provides that full-time employees are eligible for coverage under the plan. Employee *A* begins employment as a full-time employee on January 19.

(ii) *Conclusion.* In this *Example 1,* any waiting period for *A* would begin on January 19 and may not exceed 90 days. Coverage under the plan must become effective no later than April 19 (assuming February lasts 28 days).

Example 2. (i) *Facts.* A group health plan provides that only employees with job title *M* are eligible for coverage under the plan. Employee *B* begins employment with job title *L* on January 30.

(ii) *Conclusion.* In this *Example 2, B* is not eligible for coverage under the plan, and the period while *B* is working with job title *L* and therefore not in an eligible class of employees, is not part of a waiting period under this section.

Example 3. (i) *Facts.* Same facts as in *Example 2,* except that *B* transfers to a new position with job title *M* on April 11.

(ii) *Conclusion.* In this *Example 3, B* becomes eligible for coverage on April 11, but for the waiting period. Any waiting period for *B* begins on April 11 and may not exceed 90 days; therefore, coverage under the plan must become effective no later than July 10.

Example 4. (i) *Facts.* A group health plan provides that only employees who have completed specified training and achieved specified certifications are eligible for coverage under the plan. Employee *C* is hired on May 3 and meets the plan's eligibility criteria on September 22.

(ii) *Conclusion.* In this *Example 4, C* becomes eligible for coverage on September 22, but for the waiting period. Any waiting period for *C* would begin on September 22 and may not exceed 90 days; therefore, coverage under the plan must become effective no later than December 21.

Example 5. (i) *Facts.* A group health plan provides that employees are eligible for coverage after one year of service.

(ii) *Conclusion.* In this *Example 5,* the plan's eligibility condition is based solely on the lapse of time and, therefore, is impermissible under paragraph (c)(2) of this section because it exceeds 90 days.

Example 6. (i) *Facts.* Employer *V*'s group health plan provides for coverage to begin on the first day of the first payroll period on or

after the date an employee is hired and completes the applicable enrollment forms. Enrollment forms are distributed on an employee's start date and may be completed within 90 days. Employee *D* is hired and starts on October 31, which is the first day of a pay period. *D* completes the enrollment forms and submits them on the 90th day after *D*'s start date, which is January 28. Coverage is made effective 7 days later, February 4, which is the first day of the next pay period.

(ii) *Conclusion*. In this *Example 6*, under the terms of *V*'s plan, coverage may become effective as early as October 31, depending on when *D* completes the applicable enrollment forms. Under the terms of the plan, when coverage becomes effective depends solely on the length of time taken by *D* to complete the enrollment materials. Therefore, under the terms of the plan, *D* may elect coverage that would begin on a date that does not exceed the 90-day waiting period limitation, and the plan complies with this section.

Example 7. (i) *Facts*. Under Employer *W*'s group health plan, only employees who are full-time (defined under the plan as regularly averaging 30 hours of service per week) are eligible for coverage. Employee *E* begins employment for Employer *W* on November 26 of Year 1. *E*'s hours are reasonably expected to vary, with an opportunity to work between 20 and 45 hours per week, depending on shift availability and *E*'s availability. Therefore, it cannot be determined at *E*'s start date that *E* is reasonably expected to work full-time. Under the terms of the plan, variable-hour employees, such as *E*, are eligible to enroll in the plan if they are determined to be a full-time employee after a measurement period of 12 months that begins on the employee's start date. Coverage is made effective no later than the first day of the first calendar month after the applicable enrollment forms are received. *E*'s 12-month measurement period ends November 25 of Year 2. *E* is determined to be a full-time employee and is notified of *E*'s plan eligibility. If *E* then elects coverage, *E*'s first day of coverage will be January 1 of Year 3.

(ii) *Conclusion*. In this *Example 7*, the measurement period is permissible because it is not considered to be designed to avoid compliance with the 90-day waiting period limitation. The plan may use a reasonable period of time to determine whether a variable-hour employee is a full-time employee, provided that (a) the period of time is no longer than 12 months; (b) the period of time begins on a date between the employee's start date and the first day of the next calendar month (inclusive); (c) coverage is made effective no later than 13 months from *E*'s start date plus, if the employee's start date is not the first day of a calendar month, the time remaining until the first day of the next calendar month; and (d) in addition to the measurement period, no more than 90 days elapse prior to the employee's eligibility for coverage.

Example 8. (i) *Facts*. Employee *F* begins working 25 hours per week for Employer *X* on January 6 and is considered a part-time employee for purposes of *X*'s group health plan. *X* sponsors a group health plan that provides coverage to part-time employees after they have completed a cumulative 1,200 hours of service. *F* satisfies the plan's cumulative hours of service condition on December 15.

(ii) *Conclusion*. In this *Example 8*, the cumulative hours of service condition with respect to part-time employees is not considered to be designed to avoid compliance with the 90-day waiting period limitation. Accordingly, coverage for *F* under the plan must begin no later than the 91st day after *F* completes 1,200 hours. (If the plan's cumulative hours-of-service requirement was more than 1,200 hours, the requirement would be considered to be designed to avoid compliance with the 90-day waiting period limitation.)

Example 9. (i) *Facts*. A multiemployer plan operating pursuant to an arms-length collective bargaining agreement has an eligibility provision that allows employees to become eligible for coverage by working a specified number of hours of covered employment for multiple contributing employers. The plan aggregates hours in a calendar quarter and then, if enough hours are earned, coverage begins the first day of the next calendar quarter. The plan also permits coverage to extend for the next full calendar quarter, regardless of whether an employee's employment has terminated.

(ii) *Conclusion*. In this *Example 9*, these eligibility provisions are designed to accommodate a unique operating structure, and, therefore, are not considered to be designed to avoid compliance with the 90-day waiting period limitation, and the plan complies with this section.

Example 10. (i) *Facts*. Employee *G* retires at age 55 after 30 years of employment with Employer *Y* with no expectation of providing further services to Employer *Y*. Three months later, *Y* recruits *G* to return to work as an employee providing advice and transition assistance for *G*'s replacement under a one-year employment contract. *Y*'s plan imposes a 90-day waiting period from an employee's start date before coverage becomes effective.

(ii) *Conclusion*. In this *Example 10*, *Y*'s plan may treat *G* as newly eligible for coverage under the plan upon rehire and therefore may impose the 90-day waiting period with respect to *G* for coverage offered in connection with *G*'s rehire.

(g) *Special rule for health insurance issuers*. To the extent coverage under a group health plan is insured by a health insurance issuer, the issuer is

permitted to rely on the eligibility information reported to it by the employer (or other plan sponsor) and will not be considered to violate the requirements of this section with respect to its administration of any waiting period, if both of the following conditions are satisfied:

(1) The issuer requires the plan sponsor to make a representation regarding the terms of any eligibility conditions or waiting periods imposed by the plan sponsor before an individual is eligible to become covered under the terms of the plan (and requires the plan sponsor to update this representation with any changes), and

(2) The issuer has no specific knowledge of the imposition of a waiting period that would exceed the permitted 90-day period.

(h) *No effect on other laws*. Compliance with this section is not determinative of compliance with any other provision of State or Federal law (including ERISA, the Code, or other provisions of the Patient Protection and Affordable Care Act). *See e.g.*, § 2590.702, which prohibits discrimination in eligibility for coverage based on a health factor and Code section 4980H, which generally requires applicable large employers to offer coverage to full-time employees and their dependents or make an assessable payment.

(i) *Applicability date*. The provisions of this section apply for plan years beginning on or after January 1, 2015. *See* § 2590.715–1251 providing that the prohibition on waiting periods exceeding 90 days applies to all group health plans and group health insurance issuers, including grandfathered health plans.

[79 FR 10311, Feb. 24, 2014]

EFFECTIVE DATE NOTE: At 79 FR 35947, June 25, 2014, § 2590.715–2708 was amended by adding paragraph (c)(3)(iii) and a new Example 11 in paragraph (f), effective Aug. 25, 2014. For the convenience of the user, the added text is set forth as follows:

§ 2590.715–2708 Prohibition on waiting periods that exceed 90 days.

* * * * *

(c) * * *

(3) * * *

(iii) *Limitation on orientation periods*. To ensure that an orientation period is not used as a subterfuge for the passage of time, or designed to avoid compliance with the 90-day waiting period limitation, an orientation period is permitted only if it does not exceed one month. For this purpose, one month is determined by adding one calendar month and subtracting one calendar day, measured from an employee's start date in a position that is otherwise eligible for coverage. For example, if an employee's start date in an otherwise eligible position is May 3, the last permitted day of the orientation period is June 2. Similarly, if an employee's start date in an otherwise eligible position is October 1, the last permitted day of the orientation period is October 31. If there is not a corresponding date in the next calendar month upon adding a calendar month, the last permitted day of the orientation period is the last day of the next calendar month. For example, if the employee's start date is January 30, the last permitted day of the orientation period is February 28 (or February 29 in a leap year). Similarly, if the employee's start date is August 31, the last permitted day of the orientation period is September 30.

* * * * *

(f) * * *

Example 11. (i) *Facts*. Employee *H* begins working full time for Employer *Z* on October 16. *Z* sponsors a group health plan, under which full time employees are eligible for coverage after they have successfully completed a bona fide one-month orientation period. *H* completes the orientation period on November 15.

(ii) *Conclusion*. In this *Example 11*, the orientation period is not considered a subterfuge for the passage of time and is not considered to be designed to avoid compliance with the 90-day waiting period limitation. Accordingly, plan coverage for *H* must begin no later than February 14, which is the 91st day after *H* completes the orientation period. (If the orientation period was longer than one month, it would be considered to be a subterfuge for the passage of time and designed to avoid compliance with the 90-day waiting period limitation. Accordingly it would violate the rules of this section.)

* * * * *

§ 2590.715–2711 No lifetime or annual limits.

(a) *Prohibition*—(1) *Lifetime limits*. Except as provided in paragraph (b) of this section, a group health plan, or a health insurance issuer offering group health insurance coverage, may not establish any lifetime limit on the dollar amount of benefits for any individual.

(2) *Annual limits*—(i) *General rule*. Except as provided in paragraphs (a)(2)(ii), (b), and (d) of this section, a group health plan, or a health insurance issuer offering group health insurance coverage, may not establish any annual limit on the dollar amount of benefits for any individual.

(ii) *Exception for health flexible spending arrangements*. A health flexible spending arrangement (as defined in section 106(c)(2) of the Internal Revenue Code) is not subject to the requirement in paragraph (a)(2)(i) of this section.

(b) *Construction*—(1) *Permissible limits on specific covered benefits*. The rules of this section do not prevent a group health plan, or a health insurance issuer offering group health insurance coverage, from placing annual or lifetime dollar limits with respect to any individual on specific covered benefits that are not essential health benefits to the extent that such limits are otherwise permitted under applicable Federal or State law. (The scope of essential health benefits is addressed in paragraph (c) of this section).

(2) *Condition-based exclusions*. The rules of this section do not prevent a group health plan, or a health insurance issuer offering group health insurance coverage, from excluding all benefits for a condition. However, if any benefits are provided for a condition, then the requirements of this section apply. Other requirements of Federal or State law may require coverage of certain benefits.

(c) *Definition of essential health benefits*. The term ''essential health benefits'' means essential health benefits under section 1302(b) of the Patient Protection and Affordable Care Act and applicable regulations.

(d) *Restricted annual limits permissible prior to 2014*—(1) *In general*. With respect to plan years beginning prior to January 1, 2014, a group health plan, or a health insurance issuer offering group health insurance coverage, may establish, for any individual, an annual limit on the dollar amount of benefits that are essential health benefits, provided the limit is no less than the amounts in the following schedule:

(i) For a plan year beginning on or after September 23, 2010, but before September 23, 2011, $750,000.

(ii) For a plan year beginning on or after September 23, 2011, but before September 23, 2012, $1,250,000.

(iii) For plan years beginning on or after September 23, 2012, but before January 1, 2014, $2,000,000.

(2) *Only essential health benefits taken into account*. In determining whether an individual has received benefits that meet or exceed the applicable amount described in paragraph (d)(1) of this section, a plan or issuer must take into account only essential health benefits.

(3) *Waiver authority of the Secretary of Health and Human Services*. For plan years beginning before January 1, 2014, the Secretary of Health and Human Services may establish a program under which the requirements of paragraph (d)(1) of this section relating to annual limits may be waived (for such period as is specified by the Secretary of Health and Human Services) for a group health plan or health insurance coverage that has an annual dollar limit on benefits below the restricted annual limits provided under paragraph (d)(1) of this section if compliance with paragraph (d)(1) of this section would result in a significant decrease in access to benefits under the plan or health insurance coverage or would significantly increase premiums for the plan or health insurance coverage.

(e) *Transitional rules for individuals whose coverage or benefits ended by reason of reaching a lifetime limit*—(1) *In general*. The relief provided in the transitional rules of this paragraph (e) applies with respect to any individual—

(i) Whose coverage or benefits under a group health plan or group health insurance coverage ended by reason of reaching a lifetime limit on the dollar value of all benefits for any individual (which, under this section, is no longer permissible); and

(ii) Who becomes eligible (or is required to become eligible) for benefits not subject to a lifetime limit on the dollar value of all benefits under the group health plan or group health insurance coverage on the first day of the first plan year beginning on or after

September 23, 2010, by reason of the application of this section.

(2) *Notice and enrollment opportunity requirements*–(i) If an individual described in paragraph (e)(1) of this section is eligible for benefits (or is required to become eligible for benefits) under the group health plan—or group health insurance coverage—described in paragraph (e)(1) of this section, the plan and the issuer are required to give the individual written notice that the lifetime limit on the dollar value of all benefits no longer applies and that the individual, if covered, is once again eligible for benefits under the plan. Additionally, if the individual is not enrolled in the plan or health insurance coverage, or if an enrolled individual is eligible for but not enrolled in any benefit package under the plan or health insurance coverage, then the plan and issuer must also give such an individual an opportunity to enroll that continues for at least 30 days (including written notice of the opportunity to enroll). The notices and enrollment opportunity required under this paragraph (e)(2)(i) must be provided beginning not later than the first day of the first plan year beginning on or after September 23, 2010.

(ii) The notices required under paragraph (e)(2)(i) of this section may be provided to an employee on behalf of the employee's dependent. In addition, the notices may be included with other enrollment materials that a plan distributes to employees, provided the statement is prominent. For either notice, if a notice satisfying the requirements of this paragraph (e)(2) is provided to an individual, the obligation to provide the notice with respect to that individual is satisfied for both the plan and the issuer.

(3) *Effective date of coverage*. In the case of an individual who enrolls under paragraph (e)(2) of this section, coverage must take effect not later than the first day of the first plan year beginning on or after September 23, 2010.

(4) *Treatment of enrollees in a group health plan*. Any individual enrolling in a group health plan pursuant to paragraph (e)(2) of this section must be treated as if the individual were a special enrollee, as provided under the rules of § 2590.701–6(d) of this part. Accordingly, the individual (and, if the individual would not be a participant once enrolled in the plan, the participant through whom the individual is otherwise eligible for coverage under the plan) must be offered all the benefit packages available to similarly situated individuals who did not lose coverage by reason of reaching a lifetime limit on the dollar value of all benefits. For this purpose, any difference in benefits or cost-sharing requirements constitutes a different benefit package. The individual also cannot be required to pay more for coverage than similarly situated individuals who did not lose coverage by reason of reaching a lifetime limit on the dollar value of all benefits.

(5) *Examples*. The rules of this paragraph (e) are illustrated by the following examples:

Example 1. (i) *Facts*. Employer *Y* maintains a group health plan with a calendar year plan year. The plan has a single benefit package. For plan years beginning before September 23, 2010, the plan has a lifetime limit on the dollar value of all benefits. Individual *B*, an employee of *Y*, was enrolled in *Y*'s group health plan at the beginning of the 2008 plan year. On June 10, 2008, *B* incurred a claim for benefits that exceeded the lifetime limit under *Y*'s plan and ceased to be enrolled in the plan. *B* is still eligible for coverage under *Y*'s group health plan. On or before January 1, 2011, *Y*'s group health plan gives *B* written notice informing *B* that the lifetime limit on the dollar value of all benefits no longer applies, that individuals whose coverage ended by reason of reaching a lifetime limit under the plan are eligible to enroll in the plan, and that individuals can request such enrollment through February 1, 2011 with enrollment effective retroactively to January 1, 2011.

(ii) *Conclusion*. In this *Example 1*, the plan has complied with the requirements of this paragraph (e) by providing a timely written notice and enrollment opportunity to *B* that lasts at least 30 days.

Example 2. (i) *Facts*. Employer *Z* maintains a group health plan with a plan year beginning October 1 and ending September 30. Prior to October 1, 2010, the group health plan has a lifetime limit on the dollar value of all benefits. Individual *D*, an employee of *Z*, and Individual *E*, *D*'s child, were enrolled in family coverage under *Z*'s group health plan for the plan year beginning on October 1, 2008. On May 1, 2009, *E* incurred a claim for benefits that exceeded the lifetime limit under *Z*'s plan. *D* dropped family coverage

but remains an employee of *Z* and is still eligible for coverage under *Z*'s group health plan.

(ii) *Conclusion*. In this *Example 2*, not later than October 1, 2010, the plan must provide *D* and *E* an opportunity to enroll (including written notice of an opportunity to enroll) that continues for at least 30 days, with enrollment effective not later than October 1, 2010.

Example 3. (i) *Facts*. Same facts as *Example 2*, except that *Z*'s plan had two benefit packages (a low-cost and a high-cost option). Instead of dropping coverage, *D* switched to the low-cost benefit package option.

(ii) *Conclusion*. In this *Example 3*, not later than October 1, 2010, the plan must provide *D* and *E* an opportunity to enroll in any benefit package available to similarly situated individuals who enroll when first eligible. The plan would have to provide *D* and *E* the opportunity to enroll in any benefit package available to similarly situated individuals who enroll when first eligible, even if *D* had not switched to the low-cost benefit package option.

Example 4. (i) *Facts*. Employer *Q* maintains a group health plan with a plan year beginning October 1 and ending September 30. For the plan year beginning on October 1, 2009, *Q* has an annual limit on the dollar value of all benefits of $500,000.

(ii) *Conclusion*. In this *Example 4*, *Q* must raise the annual limit on the dollar value of essential health benefits to at least $750,000 for the plan year beginning October 1, 2010. For the plan year beginning October 1, 2011, *Q* must raise the annual limit to at least $1.25 million. For the plan year beginning October 1, 2012, *Q* must raise the annual limit to at least $2 million. *Q* may also impose a restricted annual limit of $2 million for the plan year beginning October 1, 2013. After the conclusion of that plan year, *Q* cannot impose an overall annual limit.

Example 5. (i) *Facts*. Same facts as *Example 4*, except that the annual limit for the plan year beginning on October 1, 2009 is $1 million and *Q* lowers the annual limit for the plan year beginning October 1, 2010 to $750,000.

(ii) *Conclusion*. In this *Example 5*, *Q* complies with the requirements of this paragraph (e). However, *Q*'s choice to lower its annual limit means that under § 2590.715–1251(g)(1)(vi)(C), the group health plan will cease to be a grandfathered health plan and will be generally subject to all of the provisions of PHS Act sections 2701 through 2719A.

(f) *Applicability date*. The provisions of this section apply for plan years beginning on or after September 23, 2010. *See* § 2590.715–1251 of this Part for determining the application of this section to grandfathered health plans (providing that the prohibitions on lifetime and annual limits apply to all grandfathered health plans that are group health plans and group health insurance coverage, including the special rules regarding restricted annual limits).

[75 FR 37229, June 28, 2010]

§ 2590.715–2712 Rules regarding rescissions.

(a) *Prohibition on rescissions*—(1) A group health plan, or a health insurance issuer offering group health insurance coverage, must not rescind coverage under the plan, or under the policy, certificate, or contract of insurance, with respect to an individual (including a group to which the individual belongs or family coverage in which the individual is included) once the individual is covered under the plan or coverage, unless the individual (or a person seeking coverage on behalf of the individual) performs an act, practice, or omission that constitutes fraud, or unless the individual makes an intentional misrepresentation of material fact, as prohibited by the terms of the plan or coverage. A group health plan, or a health insurance issuer offering group health insurance coverage, must provide at least 30 days advance written notice to each participant who would be affected before coverage may be rescinded under this paragraph (a)(1), regardless of whether the coverage is insured or self-insured, or whether the rescission applies to an entire group or only to an individual within the group. (The rules of this paragraph (a)(1) apply regardless of any contestability period that may otherwise apply.)

(2) For purposes of this section, a rescission is a cancellation or discontinuance of coverage that has retroactive effect. For example, a cancellation that treats a policy as void from the time of the individual's or group's enrollment is a rescission. As another example, a cancellation that voids benefits paid up to a year before the cancellation is also a rescission for this purpose. A cancellation or discontinuance of coverage is not a rescission if –

(i) The cancellation or discontinuance of coverage has only a prospective effect; or

(ii) The cancellation or discontinuance of coverage is effective retroactively to the extent it is attributable to a failure to timely pay required premiums or contributions towards the cost of coverage.

(3) The rules of this paragraph (a) are illustrated by the following examples:

Example 1. (i) *Facts.* Individual *A* seeks enrollment in an insured group health plan. The plan terms permit rescission of coverage with respect to an individual if the individual engages in fraud or makes an intentional misrepresentation of a material fact. The plan requires *A* to complete a questionnaire regarding *A*'s prior medical history, which affects setting the group rate by the health insurance issuer. The questionnaire complies with the other requirements of this part. The questionnaire includes the following question: ''Is there anything else relevant to your health that we should know?'' *A* inadvertently fails to list that *A* visited a psychologist on two occasions, six years previously. *A* is later diagnosed with breast cancer and seeks benefits under the plan. On or around the same time, the issuer receives information about *A*'s visits to the psychologist, which was not disclosed in the questionnaire.

(ii) *Conclusion.* In this *Example 1,* the plan cannot rescind *A*'s coverage because *A*'s failure to disclose the visits to the psychologist was inadvertent. Therefore, it was not fraudulent or an intentional misrepresentation of material fact.

Example 2. (i) *Facts.* An employer sponsors a group health plan that provides coverage for employees who work at least 30 hours per week. Individual *B* has coverage under the plan as a full-time employee. The employer reassigns *B* to a part-time position. Under the terms of the plan, *B* is no longer eligible for coverage. The plan mistakenly continues to provide health coverage, collecting premiums from *B* and paying claims submitted by *B*. After a routine audit, the plan discovers that *B* no longer works at least 30 hours per week. The plan rescinds *B*'s coverage effective as of the date that *B* changed from a full-time employee to a part-time employee.

(ii) *Conclusion.* In this *Example 2,* the plan cannot rescind *B*'s coverage because there was no fraud or an intentional misrepresentation of material fact. The plan may cancel coverage for *B* prospectively, subject to other applicable Federal and State laws.

(b) *Compliance with other requirements.* Other requirements of Federal or State law may apply in connection with a rescission of coverage.

(c) *Applicability date.* The provisions of this section apply for plan years beginning on or after September 23, 2010. *See* § 2590.715–1251 of this part for determining the application of this section to grandfathered health plans (providing that the rules regarding rescissions and advance notice apply to all grandfathered health plans).

[75 FR 37231, June 28, 2010]

§ 2590.715–2713 Coverage of preventive health services.

(a) *Services*—(1) *In general.* Beginning at the time described in paragraph (b) of this section and subject to § 2590.715–2713A, a group health plan, or a health insurance issuer offering group health insurance coverage, must provide coverage for all of the following items and services, and may not impose any cost-sharing requirements (such as a copayment, coinsurance, or a deductible) with respect to those items and services:

(i) Evidence-based items or services that have in effect a rating of A or B in the current recommendations of the United States Preventive Services Task Force with respect to the individual involved (except as otherwise provided in paragraph (c) of this section);

(ii) Immunizations for routine use in children, adolescents, and adults that have in effect a recommendation from the Advisory Committee on Immunization Practices of the Centers for Disease Control and Prevention with respect to the individual involved (for this purpose, a recommendation from the Advisory Committee on Immunization Practices of the Centers for Disease Control and Prevention is considered in effect after it has been adopted by the Director of the Centers for Disease Control and Prevention, and a recommendation is considered to be for routine use if it is listed on the Immunization Schedules of the Centers for Disease Control and Prevention);

(iii) With respect to infants, children, and adolescents, evidence-informed preventive care and screenings provided for in comprehensive guidelines supported by the Health Resources and Services Administration; and

(iv) With respect to women, to the extent not described in paragraph (a)(1)(i) of this section, evidence-informed preventive care and screenings

provided for in binding comprehensive health plan coverage guidelines supported by the Health Resources and Services Administration, in accordance with 45 CFR 147.131(a).

(2) *Office visits*—(i) If an item or service described in paragraph (a)(1) of this section is billed separately (or is tracked as individual encounter data separately) from an office visit, then a plan or issuer may impose cost-sharing requirements with respect to the office visit.

(ii) If an item or service described in paragraph (a)(1) of this section is not billed separately (or is not tracked as individual encounter data separately) from an office visit and the primary purpose of the office visit is the delivery of such an item or service, then a plan or issuer may not impose cost-sharing requirements with respect to the office visit.

(iii) If an item or service described in paragraph (a)(1) of this section is not billed separately (or is not tracked as individual encounter data separately) from an office visit and the primary purpose of the office visit is not the delivery of such an item or service, then a plan or issuer may impose cost-sharing requirements with respect to the office visit.

(iv) The rules of this paragraph (a)(2) are illustrated by the following examples:

Example 1. (i) *Facts.* An individual covered by a group health plan visits an in-network health care provider. While visiting the provider, the individual is screened for cholesterol abnormalities, which has in effect a rating of A or B in the current recommendations of the United States Preventive Services Task Force with respect to the individual. The provider bills the plan for an office visit and for the laboratory work of the cholesterol screening test.

(ii) *Conclusion.* In this *Example 1,* the plan may not impose any cost-sharing requirements with respect to the separately-billed laboratory work of the cholesterol screening test. Because the office visit is billed separately from the cholesterol screening test, the plan may impose cost-sharing requirements for the office visit.

Example 2. (i) *Facts.* Same facts as *Example 1.* As the result of the screening, the individual is diagnosed with hyperlipidemia and is prescribed a course of treatment that is not included in the recommendations under paragraph (a)(1) of this section.

(ii) *Conclusion.* In this *Example 2,* because the treatment is not included in the recommendations under paragraph (a)(1) of this section, the plan is not prohibited from imposing cost-sharing requirements with respect to the treatment.

Example 3. (i) *Facts.* An individual covered by a group health plan visits an in-network health care provider to discuss recurring abdominal pain. During the visit, the individual has a blood pressure screening, which has in effect a rating of A or B in the current recommendations of the United States Preventive Services Task Force with respect to the individual. The provider bills the plan for an office visit.

(ii) *Conclusion.* In this *Example 3,* the blood pressure screening is provided as part of an office visit for which the primary purpose was not to deliver items or services described in paragraph (a)(1) of this section. Therefore, the plan may impose a cost-sharing requirement for the office visit charge.

Example 4. (i) *Facts.* A child covered by a group health plan visits an in-network pediatrician to receive an annual physical exam described as part of the comprehensive guidelines supported by the Health Resources and Services Administration. During the office visit, the child receives additional items and services that are not described in the comprehensive guidelines supported by the Health Resources and Services Administration, nor otherwise described in paragraph (a)(1) of this section. The provider bills the plan for an office visit.

(ii) *Conclusion.* In this *Example 4,* the service was not billed as a separate charge and was billed as part of an office visit. Moreover, the primary purpose for the visit was to deliver items and services described as part of the comprehensive guidelines supported by the Health Resources and Services Administration. Therefore, the plan may not impose a cost-sharing requirement with respect to the office visit.

(3) *Out-of-network providers.* Nothing in this section requires a plan or issuer that has a network of providers to provide benefits for items or services described in paragraph (a)(1) of this section that are delivered by an out-of-network provider. Moreover, nothing in this section precludes a plan or issuer that has a network of providers from imposing cost-sharing requirements for items or services described in paragraph (a)(1) of this section that are delivered by an out-of-network provider.

(4) *Reasonable medical management.* Nothing prevents a plan or issuer from using reasonable medical management techniques to determine the frequency, method, treatment, or setting for an

item or service described in paragraph (a)(1) of this section to the extent not specified in the recommendation or guideline.

(5) *Services not described.* Nothing in this section prohibits a plan or issuer from providing coverage for items and services in addition to those recommended by the United States Preventive Services Task Force or the Advisory Committee on Immunization Practices of the Centers for Disease Control and Prevention, or provided for by guidelines supported by the Health Resources and Services Administration, or from denying coverage for items and services that are not recommended by that task force or that advisory committee, or under those guidelines. A plan or issuer may impose cost-sharing requirements for a treatment not described in paragraph (a)(1) of this section, even if the treatment results from an item or service described in paragraph (a)(1) of this section.

(b) *Timing*—(1) *In general.* A plan or issuer must provide coverage pursuant to paragraph (a)(1) of this section for plan years that begin on or after September 23, 2010, or, if later, for plan years that begin on or after the date that is one year after the date the recommendation or guideline is issued.

(2) *Changes in recommendations or guidelines.* A plan or issuer is not required under this section to provide coverage for any items and services specified in any recommendation or guideline described in paragraph (a)(1) of this section after the recommendation or guideline is no longer described in paragraph (a)(1) of this section. Other requirements of Federal or State law may apply in connection with a plan or issuer ceasing to provide coverage for any such items or services, including PHS Act section 2715(d)(4), which requires a plan or issuer to give 60 days advance notice to an enrollee before any material modification will become effective.

(c) *Recommendations not current.* For purposes of paragraph (a)(1)(i) of this section, and for purposes of any other provision of law, recommendations of the United States Preventive Services Task Force regarding breast cancer screening, mammography, and prevention issued in or around November 2009 are not considered to be current.

(d) *Applicability date.* The provisions of this section apply for plan years beginning on or after September 23, 2010. *See* § 2590.715–1251 of this Part for determining the application of this section to grandfathered health plans (providing that these rules regarding coverage of preventive health services do not apply to grandfathered health plans).

[75 FR 41757, July 19, 2010, as amended at 76 FR 46625, Aug. 3, 2011; 78 FR 39894, July 2, 2013]

§ 2590.715–2713A Accommodations in connection with coverage of preventive health services.

(a) *Eligible organizations.* An eligible organization is an organization that satisfies all of the following requirements:

(1) The organization opposes providing coverage for some or all of any contraceptive services required to be covered under § 2590.715–2713(a)(1)(iv) on account of religious objections.

(2) The organization is organized and operates as a nonprofit entity.

(3) The organization holds itself out as a religious organization.

(4) The organization self-certifies, in a form and manner specified by the Secretary, that it satisfies the criteria in paragraphs (a)(1) through (3) of this section, and makes such self-certification available for examination upon request by the first day of the first plan year to which the accommodation in paragraph (b) or (c) of this section applies. The self-certification must be executed by a person authorized to make the certification on behalf of the organization, and must be maintained in a manner consistent with the record retention requirements under section 107 of ERISA.

(b) *Contraceptive coverage—self-insured group health plans*—(1) A group health plan established or maintained by an eligible organization that provides benefits on a self-insured basis complies for one or more plan years with any requirement under § 2590.715–2713(a)(1)(iv) to provide contraceptive coverage if all of the requirements of this paragraph (b)(1) are satisfied:

(i) The eligible organization or its plan contracts with one or more third party administrators.

(ii) The eligible organization provides each third party administrator that will process claims for any contraceptive services required to be covered under § 2590.715–2713(a)(1)(iv) with a copy of the self-certification described in paragraph (a)(4) of this section, which shall include notice that—

(A) The eligible organization will not act as the plan administrator or claims administrator with respect to claims for contraceptive services, or contribute to the funding of contraceptive services; and

(B) Obligations of the third party administrator are set forth in § 2510.3–16 of this chapter and § 2590.715–2713A.

(iii) The eligible organization must not, directly or indirectly, seek to interfere with a third party administrator's arrangements to provide or arrange separate payments for contraceptive services for participants or beneficiaries, and must not, directly or indirectly, seek to influence the third party administrator's decision to make any such arrangements.

(2) If a third party administrator receives a copy of the self-certification described in paragraph (a)(4) of this section, and agrees to enter into or remain in a contractual relationship with the eligible organization or its plan to provide administrative services for the plan, the third party administrator shall provide or arrange payments for contraceptive services using one of the following methods—

(i) Provide payments for contraceptive services for plan participants and beneficiaries without imposing any cost-sharing requirements (such as a copayment, coinsurance, or a deductible), or imposing a premium, fee, or other charge, or any portion thereof, directly or indirectly, on the eligible organization, the group health plan, or plan participants or beneficiaries; or

(ii) Arrange for an issuer or other entity to provide payments for contraceptive services for plan participants and beneficiaries without imposing any cost-sharing requirements (such as a copayment, coinsurance, or a deductible), or imposing a premium, fee, or other charge, or any portion thereof, directly or indirectly, on the eligible organization, the group health plan, or plan participants or beneficiaries.

(3) If a third party administrator provides or arranges payments for contraceptive services in accordance with either paragraph (b)(2)(i) or (ii) of this section, the costs of providing or arranging such payments may be reimbursed through an adjustment to the Federally-facilitated Exchange user fee for a participating issuer pursuant to 45 CFR 156.50(d).

(4) A third party administrator may not require any documentation other than the copy of the self-certification from the eligible organization regarding its status as such.

(c) *Contraceptive coverage—insured group health plans*—(1) *General rule.* A group health plan established or maintained by an eligible organization that provides benefits through one or more group health insurance issuers complies for one or more plan years with any requirement under § 2590.715–2713(a)(1)(iv) to provide contraceptive coverage if the eligible organization or group health plan furnishes a copy of the self-certification described in paragraph (a)(4) of this section to each issuer that would otherwise provide such coverage in connection with the group health plan. An issuer may not require any documentation other than the copy of the self-certification from the eligible organization regarding its status as such.

(2) *Payments for contraceptive services*—(i) A group health insurance issuer that receives a copy of the self-certification described in paragraph (a)(4) of this section with respect to a group health plan established or maintained by an eligible organization in connection with which the issuer would otherwise provide contraceptive coverage under § 2590.715–2713(a)(1)(iv) must—

(A) Expressly exclude contraceptive coverage from the group health insurance coverage provided in connection with the group health plan; and

(B) Provide separate payments for any contraceptive services required to be covered under § 2590.715–2713(a)(1)(iv) for plan participants and beneficiaries for so long as they remain enrolled in the plan.

(ii) With respect to payments for contraceptive services, the issuer may not impose any cost-sharing requirements (such as a copayment, coinsurance, or a deductible), or impose any premium, fee, or other charge, or any portion thereof, directly or indirectly, on the eligible organization, the group health plan, or plan participants or beneficiaries. The issuer must segregate premium revenue collected from the eligible organization from the monies used to provide payments for contraceptive services. The issuer must provide payments for contraceptive services in a manner that is consistent with the requirements under sections 2706, 2709, 2711, 2713, 2719, and 2719A of the PHS Act, as incorporated into section 715 of ERISA. If the group health plan of the eligible organization provides coverage for some but not all of any contraceptive services required to be covered under § 2590.715–2713(a)(1)(iv), the issuer is required to provide payments only for those contraceptive services for which the group health plan does not provide coverage. However, the issuer may provide payments for all contraceptive services, at the issuer's option.

(d) *Notice of availability of separate payments for contraceptive services—self-insured and insured group health plans.* For each plan year to which the accommodation in paragraph (b) or (c) of this section is to apply, a third party administrator required to provide or arrange payments for contraceptive services pursuant to paragraph (b) of this section, and an issuer required to provide payments for contraceptive services pursuant to paragraph (c) of this section, must provide to plan participants and beneficiaries written notice of the availability of separate payments for contraceptive services contemporaneous with (to the extent possible), but separate from, any application materials distributed in connection with enrollment (or re-enrollment) in group health coverage that is effective beginning on the first day of each applicable plan year. The notice must specify that the eligible organization does not administer or fund contraceptive benefits, but that the third party administrator or issuer, as applicable, provides separate payments for contraceptive services, and must provide contact information for questions and complaints. The following model language, or substantially similar language, may be used to satisfy the notice requirement of this paragraph (d): ''Your employer has certified that your group health plan qualifies for an accommodation with respect to the federal requirement to cover all Food and Drug Administration-approved contraceptive services for women, as prescribed by a health care provider, without cost sharing. This means that your employer will not contract, arrange, pay, or refer for contraceptive coverage. Instead, [name of third party administrator/health insurance issuer] will provide or arrange separate payments for contraceptive services that you use, without cost sharing and at no other cost, for so long as you are enrolled in your group health plan. Your employer will not administer or fund these payments. If you have any questions about this notice, contact [contact information for third party administrator/health insurance issuer].''

(e) *Reliance—insured group health plans*—(1) If an issuer relies reasonably and in good faith on a representation by the eligible organization as to its eligibility for the accommodation in paragraph (c) of this section, and the representation is later determined to be incorrect, the issuer is considered to comply with any requirement under § 2590.715–2713(a)(1)(iv) to provide contraceptive coverage if the issuer complies with the obligations under this section applicable to such issuer.

(2) A group health plan is considered to comply with any requirement under § 2590.715–2713(a)(1)(iv) to provide contraceptive coverage if the plan complies with its obligations under paragraph (c) of this section, without regard to whether the issuer complies with the obligations under this section applicable to such issuer.

[78 FR 39894, July 2, 2013]

§ 2590.715–2714 Eligibility of children until at least age 26.

(a) *In general*—(1) A group health plan, or a health insurance issuer offering group health insurance coverage,

that makes available dependent coverage of children must make such coverage available for children until attainment of 26 years of age.

(2) The rule of this paragraph (a) is illustrated by the following example:

Example. (i) *Facts*. For the plan year beginning January 1, 2011, a group health plan provides health coverage for employees, employees' spouses, and employees' children until the child turns 26. On the birthday of a child of an employee, July 17, 2011, the child turns 26. The last day the plan covers the child is July 16, 2011.

(ii) *Conclusion*. In this *Example*, the plan satisfies the requirement of this paragraph (a) with respect to the child.

(b) *Restrictions on plan definition of dependent*. With respect to a child who has not attained age 26, a plan or issuer may not define dependent for purposes of eligibility for dependent coverage of children other than in terms of a relationship between a child and the participant. Thus, for example, a plan or issuer may not deny or restrict coverage for a child who has not attained age 26 based on the presence or absence of the child's financial dependency (upon the participant or any other person), residency with the participant or with any other person, student status, employment, or any combination of those factors. In addition, a plan or issuer may not deny or restrict coverage of a child based on eligibility for other coverage, except that paragraph (g) of this section provides a special rule for plan years beginning before January 1, 2014 for grandfathered health plans that are group health plans. (Other requirements of Federal or State law, including section 609 of ERISA or section 1908 of the Social Security Act, may mandate coverage of certain children.)

(c) *Coverage of grandchildren not required*. Nothing in this section requires a plan or issuer to make coverage available for the child of a child receiving dependent coverage.

(d) *Uniformity irrespective of age*. The terms of the plan or health insurance coverage providing dependent coverage of children cannot vary based on age (except for children who are age 26 or older).

(e) *Examples*. The rules of paragraph (d) of this section are illustrated by the following examples:

Example 1. (i) *Facts*. A group health plan offers a choice of self-only or family health coverage. Dependent coverage is provided under family health coverage for children of participants who have not attained age 26. The plan imposes an additional premium surcharge for children who are older than age 18.

(ii) *Conclusion*. In this *Example 1*, the plan violates the requirement of paragraph (d) of this section because the plan varies the terms for dependent coverage of children based on age.

Example 2. (i) *Facts*. A group health plan offers a choice among the following tiers of health coverage: self-only, self-plus-one, self-plus-two, and self-plus-three-or-more. The cost of coverage increases based on the number of covered individuals. The plan provides dependent coverage of children who have not attained age 26.

(ii) *Conclusion*. In this *Example 2*, the plan does not violate the requirement of paragraph (d) of this section that the terms of dependent coverage for children not vary based on age. Although the cost of coverage increases for tiers with more covered individuals, the increase applies without regard to the age of any child.

Example 3. (i) *Facts*. A group health plan offers two benefit packages—an HMO option and an indemnity option. Dependent coverage is provided for children of participants who have not attained age 26. The plan limits children who are older than age 18 to the HMO option.

(ii) *Conclusion*. In this *Example 3*, the plan violates the requirement of paragraph (d) of this section because the plan, by limiting children who are older than age 18 to the HMO option, varies the terms for dependent coverage of children based on age.

(f) *Transitional rules for individuals whose coverage ended by reason of reaching a dependent eligibility threshold*—(1) *In general*. The relief provided in the transitional rules of this paragraph (f) applies with respect to any child—

(i) Whose coverage ended, or who was denied coverage (or was not eligible for coverage) under a group health plan or group health insurance coverage because, under the terms of the plan or coverage, the availability of dependent coverage of children ended before the attainment of age 26 (which, under this section, is no longer permissible); and

(ii) Who becomes eligible (or is required to become eligible) for coverage under a group health plan or group

health insurance coverage on the first day of the first plan year beginning on or after September 23, 2010 by reason of the application of this section.

(2) *Opportunity to enroll required*—(i) If a group health plan, or group health insurance coverage, in which a child described in paragraph (f)(1) of this section is eligible to enroll (or is required to become eligible to enroll) is the plan or coverage in which the child's coverage ended (or did not begin) for the reasons described in paragraph (f)(1)(i) of this section, and if the plan, or the issuer of such coverage, is subject to the requirements of this section, the plan and the issuer are required to give the child an opportunity to enroll that continues for at least 30 days (including written notice of the opportunity to enroll). This opportunity (including the written notice) must be provided beginning not later than the first day of the first plan year beginning on or after September 23, 2010.

(ii) The written notice must include a statement that children whose coverage ended, or who were denied coverage (or were not eligible for coverage), because the availability of dependent coverage of children ended before attainment of age 26 are eligible to enroll in the plan or coverage. The notice may be provided to an employee on behalf of the employee's child. In addition, the notice may be included with other enrollment materials that a plan distributes to employees, provided the statement is prominent. If a notice satisfying the requirements of this paragraph (f)(2) is provided to an employee whose child is entitled to an enrollment opportunity under this paragraph (f), the obligation to provide the notice of enrollment opportunity under this paragraph (f)(2) with respect to that child is satisfied for both the plan and the issuer.

(3) *Effective date of coverage*. In the case of an individual who enrolls under paragraph (f)(2) of this section, coverage must take effect not later than the first day of the first plan year beginning on or after September 23, 2010.

(4) *Treatment of enrollees in a group health plan*. Any child enrolling in a group health plan pursuant to paragraph (f)(2) of this section must be treated as if the child were a special enrollee, as provided under the rules of § 2590.701–6(d) of this Part. Accordingly, the child (and, if the child would not be a participant once enrolled in the plan, the participant through whom the child is otherwise eligible for coverage under the plan) must be offered all the benefit packages available to similarly situated individuals who did not lose coverage by reason of cessation of dependent status. For this purpose, any difference in benefits or cost-sharing requirements constitutes a different benefit package. The child also cannot be required to pay more for coverage than similarly situated individuals who did not lose coverage by reason of cessation of dependent status.

(5) *Examples*. The rules of this paragraph (f) are illustrated by the following examples:

Example 1. (i) *Facts*. Employer *Y* maintains a group health plan with a calendar year plan year. The plan has a single benefit package. For the 2010 plan year, the plan allows children of employees to be covered under the plan until age 19, or until age 23 for children who are full-time students. Individual *B*, an employee of *Y*, and Individual *C*, *B*'s child and a full-time student, were enrolled in *Y*'s group health plan at the beginning of the 2010 plan year. On June 10, 2010, *C* turns 23 years old and loses dependent coverage under *Y*'s plan. On or before January 1, 2011, *Y*'s group health plan gives *B* written notice that individuals who lost coverage by reason of ceasing to be a dependent before attainment of age 26 are eligible to enroll in the plan, and that individuals may request enrollment for such children through February 14, 2011 with enrollment effective retroactively to January 1, 2011.

(ii) *Conclusion*. In this *Example 1*, the plan has complied with the requirements of this paragraph (f) by providing an enrollment opportunity to *C* that lasts at least 30 days.

Example 2. (i) *Facts*. Employer *Z* maintains a group health plan with a plan year beginning October 1 and ending September 30. Prior to October 1, 2010, the group health plan allows children of employees to be covered under the plan until age 22. Individual *D*, an employee of *Z*, and Individual *E*, *D*'s child, are enrolled in family coverage under *Z*'s group health plan for the plan year beginning on October 1, 2008. On May 1, 2009, *E* turns 22 years old and ceases to be eligible as a dependent under *Z*'s plan and loses coverage. *D* drops coverage but remains an employee of *Z*.

(ii) *Conclusion*. In this *Example 2*, not later than October 1, 2010, the plan must provide *D* and *E* an opportunity to enroll (including

written notice of an opportunity to enroll) that continues for at least 30 days, with enrollment effective not later than October 1, 2010.

Example 3. (i) *Facts.* Same facts as *Example 2,* except that *D* did not drop coverage. Instead, *D* switched to a lower-cost benefit package option.

(ii) *Conclusion.* In this *Example 3,* not later than October 1, 2010, the plan must provide *D* and *E* an opportunity to enroll in any benefit package available to similarly situated individuals who enroll when first eligible.

Example 4. (i) *Facts.* Same facts as *Example 2,* except that *E* elected COBRA continuation coverage.

(ii) *Conclusion.* In this *Example 4,* not later than October 1, 2010, the plan must provide *D* and *E* an opportunity to enroll other than as a COBRA qualified beneficiary (and must provide, by that date, written notice of the opportunity to enroll) that continues for at least 30 days, with enrollment effective not later than October 1, 2010.

Example 5. (i) *Facts.* Employer *X* maintains a group health plan with a calendar year plan year. Prior to 2011, the plan allows children of employees to be covered under the plan until the child attains age 22. During the 2009 plan year, an individual with a 22-year old child joins the plan; the child is denied coverage because the child is 22.

(ii) *Conclusion.* In this *Example 5,* notwithstanding that the child was not previously covered under the plan, the plan must provide the child, not later than January 1, 2011, an opportunity to enroll (including written notice to the employee of an opportunity to enroll the child) that continues for at least 30 days, with enrollment effective not later than January 1, 2011.

(g) *Special rule for grandfathered group health plans*—(1) For plan years beginning before January 1, 2014, a group health plan that qualifies as a grandfathered health plan under section 1251 of the Patient Protection and Affordable Care Act and that makes available dependent coverage of children may exclude an adult child who has not attained age 26 from coverage only if the adult child is eligible to enroll in an eligible employer-sponsored health plan (as defined in section 5000A(f)(2) of the Internal Revenue Code) other than a group health plan of a parent.

(2) For plan years beginning on or after January 1, 2014, a group health plan that qualifies as a grandfathered health plan under section 1251 of the Patient Protection and Affordable Care Act must comply with the requirements of paragraphs (a) through (f) of this section.

(h) *Applicability date.* The provisions of this section apply for plan years beginning on or after September 23, 2010. *See* § 2590.715–1251 of this Part for determining the application of this section to grandfathered health plans.

[75 FR 27136, May 13, 2010, as amended at 75 FR 34566, June 17, 2010]

§ 2590.715–2715 Summary of benefits and coverage and uniform glossary.

(a) *Summary of benefits and coverage*—(1) *In general.* A group health plan (and its administrator as defined in section 3(16)(A) of ERISA), and a health insurance issuer offering group health insurance coverage, is required to provide a written summary of benefits and coverage (SBC) for each benefit package without charge to entities and individuals described in this paragraph (a)(1) in accordance with the rules of this section.

(i) *SBC provided by a group health insurance issuer to a group health plan*—(A) *Upon application.* A health insurance issuer offering group health insurance coverage must provide the SBC to a group health plan (or its sponsor) upon application for health coverage, as soon as practicable following receipt of the application, but in no event later than seven business days following receipt of the application.

(B) *By first day of coverage (if there are changes).* If there is any change in the information required to be in the SBC that was provided upon application and before the first day of coverage, the issuer must update and provide a current SBC to the plan (or its sponsor) no later than the first day of coverage.

(C) *Upon renewal.* If the issuer renews or reissues the policy, certificate, or contract of insurance (for example, for a succeeding policy year), the issuer must provide a new SBC as follows:

(*1*) If written application is required (in either paper or electronic form) for renewal or reissuance, the SBC must be provided no later than the date the written application materials are distributed.

(*2*) If renewal or reissuance is automatic, the SBC must be provided no later than 30 days prior to the first day

of the new plan or policy year; however, with respect to an insured plan, if the policy, certificate, or contract of insurance has not been issued or renewed before such 30-day period, the SBC must be provided as soon as practicable but in no event later than seven business days after issuance of the new policy, certificate, or contract of insurance, or the receipt of written confirmation of intent to renew, whichever is earlier.

(D) *Upon request.* If a group health plan (or its sponsor) requests an SBC or summary information about a health insurance product from a health insurance issuer offering group health insurance coverage, an SBC must be provided as soon as practicable, but in no event later than seven business days following receipt of the request.

(ii) *SBC provided by a group health insurance issuer and a group health plan to participants and beneficiaries*—(A) *In general.* A group health plan (including its administrator, as defined under section 3(16) of ERISA), and a health insurance issuer offering group health insurance coverage, must provide an SBC to a participant or beneficiary (as defined under sections 3(7) and 3(8) of ERISA), and consistent with paragraph (a)(1)(iii) of this section, with respect to each benefit package offered by the plan or issuer for which the participant or beneficiary is eligible.

(B) *Upon application.* The SBC must be provided as part of any written application materials that are distributed by the plan or issuer for enrollment. If the plan or issuer does not distribute written application materials for enrollment, the SBC must be distributed no later than the first date on which the participant is eligible to enroll in coverage for the participant or any beneficiaries.

(C) *By first day of coverage (if there are changes).* If there is any change to the information required to be in the SBC that was provided upon application and before the first day of coverage, the plan or issuer must update and provide a current SBC to a participant or beneficiary no later than the first day of coverage.

(D) *Special enrollees.* The plan or issuer must provide the SBC to special enrollees (as described in § 2590.701–6 of this Part) no later than the date by which a summary plan description is required to be provided under the timeframe set forth in ERISA section 104(b)(1)(A) and its implementing regulations, which is 90 days from enrollment.

(E) *Upon renewal.* If the plan or issuer requires participants or beneficiaries to renew in order to maintain coverage (for example, for a succeeding plan year), the plan or issuer must provide a new SBC when the coverage is renewed, as follows:

(*1*) If written application is required for renewal (in either paper or electronic form), the SBC must be provided no later than the date on which the written application materials are distributed.

(*2*) If renewal is automatic, the SBC must be provided no later than 30 days prior to the first day of the new plan or policy year; however, with respect to an insured plan, if the policy, certificate, or contract of insurance has not been issued or renewed before such 30-day period, the SBC must be provided as soon as practicable but in no event later than seven business days after issuance of the new policy, certificate, or contract of insurance, or the receipt of written confirmation of intent to renew, whichever is earlier.

(F) *Upon request.* A plan or issuer must provide the SBC to participants or beneficiaries upon request for an SBC or summary information about the health coverage, as soon as practicable, but in no event later than seven business days following receipt of the request.

(iii) *Special rules to prevent unnecessary duplication with respect to group health coverage*—(A) An entity required to provide an SBC under this paragraph (a)(1) with respect to an individual satisfies that requirement if another party provides the SBC, but only to the extent that the SBC is timely and complete in accordance with the other rules of this section. Therefore, for example, in the case of a group health plan funded through an insurance policy, the plan satisfies the requirement to provide an SBC with respect to an individual if the issuer provides a timely and complete SBC to the individual.

(B) If a single SBC is provided to a participant and any beneficiaries at the participant's last known address, then the requirement to provide the SBC to the participant and any beneficiaries is generally satisfied. However, if a beneficiary's last known address is different than the participant's last known address, a separate SBC is required to be provided to the beneficiary at the beneficiary's last known address.

(C) With respect to a group health plan that offers multiple benefit packages, the plan or issuer is required to provide a new SBC automatically upon renewal only with respect to the benefit package in which a participant or beneficiary is enrolled; SBCs are not required to be provided automatically upon renewal with respect to benefit packages in which the participant or beneficiary is not enrolled. However, if a participant or beneficiary requests an SBC with respect to another benefit package (or more than one other benefit package) for which the participant or beneficiary is eligible, the SBC (or SBCs, in the case of a request for SBCs relating to more than one benefit package) must be provided upon request as soon as practicable, but in no event later than seven business days following receipt of the request.

(2) *Content*—(i) *In general*. Subject to paragraph (a)(2)(iii) of this section, the SBC must include the following:

(A) Uniform definitions of standard insurance terms and medical terms so that consumers may compare health coverage and understand the terms of (or exceptions to) their coverage, in accordance with guidance as specified by the Secretary;

(B) A description of the coverage, including cost sharing, for each category of benefits identified by the Secretary in guidance;

(C) The exceptions, reductions, and limitations of the coverage;

(D) The cost-sharing provisions of the coverage, including deductible, coinsurance, and copayment obligations;

(E) The renewability and continuation of coverage provisions;

(F) Coverage examples, in accordance with paragraph (a)(2)(ii) of this section;

(G) With respect to coverage beginning on or after January 1, 2014, a statement about whether the plan or coverage provides minimum essential coverage as defined under section 5000A(f) of the Internal Revenue Code and whether the plan's or coverage's share of the total allowed costs of benefits provided under the plan or coverage meets applicable requirements;

(H) A statement that the SBC is only a summary and that the plan document, policy, certificate, or contract of insurance should be consulted to determine the governing contractual provisions of the coverage;

(I) Contact information for questions and obtaining a copy of the plan document or the insurance policy, certificate, or contract of insurance (such as a telephone number for customer service and an Internet address for obtaining a copy of the plan document or the insurance policy, certificate, or contract of insurance);

(J) For plans and issuers that maintain one or more networks of providers, an Internet address (or similar contact information) for obtaining a list of network providers;

(K) For plans and issuers that use a formulary in providing prescription drug coverage, an Internet address (or similar contact information) for obtaining information on prescription drug coverage; and

(L) An Internet address for obtaining the uniform glossary, as described in paragraph (c) of this section, as well as a contact phone number to obtain a paper copy of the uniform glossary, and a disclosure that paper copies are available.

(ii) *Coverage examples*. The SBC must include coverage examples specified by the Secretary in guidance that illustrate benefits provided under the plan or coverage for common benefits scenarios (including pregnancy and serious or chronic medical conditions) in accordance with this paragraph (a)(2)(ii).

(A) *Number of examples*. The Secretary may identify up to six coverage examples that may be required in an SBC.

(B) *Benefits scenarios*. For purposes of this paragraph (a)(2)(ii), a benefits scenario is a hypothetical situation, consisting of a sample treatment plan for a specified medical condition during a

specific period of time, based on recognized clinical practice guidelines as defined by the National Guideline Clearinghouse, Agency for Healthcare Research and Quality. The Secretary will specify, in guidance, the assumptions, including the relevant items and services and reimbursement information, for each claim in the benefits scenario.

(C) *Illustration of benefit provided.* For purposes of this paragraph (a)(2)(ii), to illustrate benefits provided under the plan or coverage for a particular benefits scenario, a plan or issuer simulates claims processing in accordance with guidance issued by the Secretary to generate an estimate of what an individual might expect to pay under the plan, policy, or benefit package. The illustration of benefits provided will take into account any cost sharing, excluded benefits, and other limitations on coverage, as specified by the Secretary in guidance.

(iii) *Coverage provided outside the United States.* In lieu of summarizing coverage for items and services provided outside the United States, a plan or issuer may provide an Internet address (or similar contact information) for obtaining information about benefits and coverage provided outside the United States. In any case, the plan or issuer must provide an SBC in accordance with this section that accurately summarizes benefits and coverage available under the plan or coverage within the United States.

(3) *Appearance.* A group health plan and a health insurance issuer must provide an SBC in the form, and in accordance with the instructions for completing the SBC, that are specified by the Secretary in guidance. The SBC must be presented in a uniform format, use terminology understandable by the average plan enrollee, not exceed four double-sided pages in length, and not include print smaller than 12-point font.

(4) *Form*—(i) An SBC provided by an issuer offering group health insurance coverage to a plan (or its sponsor), may be provided in paper form. Alternatively, the SBC may be provided electronically (such as by email or an Internet posting) if the following three conditions are satisfied—

(A) The format is readily accessible by the plan (or its sponsor);

(B) The SBC is provided in paper form free of charge upon request; and

(C) If the electronic form is an Internet posting, the issuer timely advises the plan (or its sponsor) in paper form or email that the documents are available on the Internet and provides the Internet address.

(ii) An SBC provided by a group health plan or health insurance issuer to a participant or beneficiary may be provided in paper form. Alternatively, the SBC may be provided electronically (such as by email or an Internet posting) if the requirements of this paragraph (a)(4)(ii) are met.

(A) With respect to participants and beneficiaries covered under the plan, the SBC may be provided electronically if the requirements of 29 CFR 2520.104b–1 are met.

(B) With respect to participants and beneficiaries who are eligible but not enrolled for coverage, the SBC may be provided electronically if:

(*1*) The format is readily accessible;

(*2*) The SBC is provided in paper form free of charge upon request; and

(*3*) In a case in which the electronic form is an Internet posting, the plan or issuer timely notifies the individual in paper form (such as a postcard) or email that the documents are available on the Internet, provides the Internet address, and notifies the individual that the documents are available in paper form upon request.

(5) *Language.* A group health plan or health insurance issuer must provide the SBC in a culturally and linguistically appropriate manner. For purposes of this paragraph (a)(5), a plan or issuer is considered to provide the SBC in a culturally and linguistically appropriate manner if the thresholds and standards of § 2590.715–2719(e) of this Part are met as applied to the SBC.

(b) *Notice of modification.* If a group health plan, or health insurance issuer offering group health insurance coverage, makes any material modification (as defined under section 102 of ERISA) in any of the terms of the plan or coverage that would affect the content of the SBC, that is not reflected in the most recently provided SBC, and that occurs other than in connection

with a renewal or reissuance of coverage, the plan or issuer must provide notice of the modification to enrollees not later than 60 days prior to the date on which the modification will become effective. The notice of modification must be provided in a form that is consistent with paragraph (a)(4) of this section.

(c) *Uniform glossary*—(1) *In general.* A group health plan, and a health insurance issuer offering group health insurance coverage, must make available to participants and beneficiaries the uniform glossary described in paragraph (c)(2) of this section in accordance with the appearance and form and manner requirements of paragraphs (c)(3) and (4) of this section.

(2) *Health-coverage-related terms and medical terms.* The uniform glossary must provide uniform definitions, specified by the Secretary in guidance, of the following health-coverage-related terms and medical terms:

(i) Allowed amount, appeal, balance billing, co-insurance, complications of pregnancy, co-payment, deductible, durable medical equipment, emergency medical condition, emergency medical transportation, emergency room care, emergency services, excluded services, grievance, habilitation services, health insurance, home health care, hospice services, hospitalization, hospital outpatient care, in-network co-insurance, in-network co-payment, medically necessary, network, non-preferred provider, out-of-network co-insurance, out-of-network co-payment, out-of-pocket limit, physician services, plan, preauthorization, preferred provider, premium, prescription drug coverage, prescription drugs, primary care physician, primary care provider, provider, reconstructive surgery, rehabilitation services, skilled nursing care, specialist, usual customary and reasonable (UCR), and urgent care; and

(ii) Such other terms as the Secretary determines are important to define so that individuals and employers may compare and understand the terms of coverage and medical benefits (including any exceptions to those benefits), as specified in guidance.

(3) *Appearance.* A group health plan, and a health insurance issuer, must provide the uniform glossary with the appearance specified by the Secretary in guidance to ensure the uniform glossary is presented in a uniform format and uses terminology understandable by the average plan enrollee.

(4) *Form and manner.* A plan or issuer must make the uniform glossary described in this paragraph (c) available upon request, in either paper or electronic form (as requested), within seven business days after receipt of the request.

(d) *Preemption.* See § 2590.731 of this part. In addition, State laws that require a health insurance issuer to provide an SBC that supplies less information than required under paragraph (a) of this section are preempted.

(e) *Failure to provide.* A group health plan that willfully fails to provide information required under this section to a participant or beneficiary is subject to a fine of not more than $1,000 for each such failure. A failure with respect to each participant or beneficiary constitutes a separate offense for purposes of this paragraph (e).

(f) *Applicability date*—(1) This section is applicable to group health plans and group health insurance issuers in accordance with this paragraph (f). (*See* § 2590.715–1251(d), providing that this section applies to grandfathered health plans.)

(i) For disclosures with respect to participants and beneficiaries who enroll or re-enroll through an open enrollment period (including re-enrollees and late enrollees), this section applies beginning on the first day of the first open enrollment period that begins on or after September 23, 2012; and

(ii) For disclosures with respect to participants and beneficiaries who enroll in coverage other than through an open enrollment period (including individuals who are newly eligible for coverage and special enrollees), this section applies beginning on the first day of the first plan year that begins on or after September 23, 2012.

(2) For disclosures with respect to plans, this section is applicable to health insurance issuers beginning September 23, 2012.

[77 FR 8700, Feb. 14, 2012]

§ 2590.715–2719 Internal claims and appeals and external review processes.

(a) *Scope and definitions*—(1) *Scope.* This section sets forth requirements with respect to internal claims and appeals and external review processes for group health plans and health insurance issuers that are not grandfathered health plans under § 2590.715–1251 of this part. Paragraph (b) of this section provides requirements for internal claims and appeals processes. Paragraph (c) of this section sets forth rules governing the applicability of State external review processes. Paragraph (d) of this section sets forth a Federal external review process for plans and issuers not subject to an applicable State external review process. Paragraph (e) of this section prescribes requirements for ensuring that notices required to be provided under this section are provided in a culturally and linguistically appropriate manner. Paragraph (f) of this section describes the authority of the Secretary to deem certain external review processes in existence on March 23, 2010 as in compliance with paragraph (c) or (d) of this section. Paragraph (g) of this section sets forth the applicability date for this section.

(2) *Definitions.* For purposes of this section, the following definitions apply—

(i) *Adverse benefit determination.* An *adverse benefit determination* means an adverse benefit determination as defined in 29 CFR 2560.503–1, as well as any rescission of coverage, as described in § 2590.715–2712(a)(2) of this part (whether or not, in connection with the rescission, there is an adverse effect on any particular benefit at that time).

(ii) *Appeal (or internal appeal).* An *appeal* or *internal appeal* means review by a plan or issuer of an adverse benefit determination, as required in paragraph (b) of this section.

(iii) *Claimant. Claimant* means an individual who makes a claim under this section. For purposes of this section, references to claimant include a claimant's authorized representative.

(iv) *External review. External review* means a review of an adverse benefit determination (including a final internal adverse benefit determination) conducted pursuant to an applicable State external review process described in paragraph (c) of this section or the Federal external review process of paragraph (d) of this section.

(v) *Final internal adverse benefit determination.* A *final internal adverse benefit determination* means an adverse benefit determination that has been upheld by a plan or issuer at the completion of the internal appeals process applicable under paragraph (b) of this section (or an adverse benefit determination with respect to which the internal appeals process has been exhausted under the deemed exhaustion rules of paragraph (b)(2)(ii)(F) of this section).

(vi) *Final external review decision.* A *final external review decision,* as used in paragraph (d) of this section, means a determination by an independent review organization at the conclusion of an external review.

(vii) *Independent review organization (*or *IRO).* An *independent review organization* (or *IRO*) means an entity that conducts independent external reviews of adverse benefit determinations and final internal adverse benefit determinations pursuant to paragraph (c) or (d) of this section.

(viii) *NAIC Uniform Model Act.* The *NAIC Uniform Model Act* means the Uniform Health Carrier External Review Model Act promulgated by the National Association of Insurance Commissioners in place on July 23, 2010.

(b) *Internal claims and appeals process*—(1) *In general.* A group health plan and a health insurance issuer offering group health insurance coverage must implement an effective internal claims and appeals process, as described in this paragraph (b).

(2) *Requirements for group health plans and group health insurance issuers.* A group health plan and a health insurance issuer offering group health insurance coverage must comply with all the requirements of this paragraph (b)(2). In the case of health insurance coverage offered in connection with a group health plan, if either the plan or the issuer complies with the internal claims and appeals process of this paragraph (b)(2), then the obligation to comply with this paragraph (b)(2) is satisfied for both the plan and the issuer with respect to the health insurance coverage.

(i) *Minimum internal claims and appeals standards.* A group health plan and a health insurance issuer offering group health insurance coverage must comply with all the requirements applicable to group health plans under 29 CFR 2560.503–1, except to the extent those requirements are modified by paragraph (b)(2)(ii) of this section. Accordingly, under this paragraph (b), with respect to health insurance coverage offered in connection with a group health plan, the group health insurance issuer is subject to the requirements in 29 CFR 2560.503–1 to the same extent as the group health plan.

(ii) *Additional standards.* In addition to the requirements in paragraph (b)(2)(i) of this section, the internal claims and appeals processes of a group health plan and a health insurance issuer offering group health insurance coverage must meet the requirements of this paragraph (b)(2)(ii).

(A) *Clarification of meaning of adverse benefit determination.* For purposes of this paragraph (b)(2), an ''adverse benefit determination'' includes an adverse benefit determination as defined in paragraph (a)(2)(i) of this section. Accordingly, in complying with 29 CFR 2560.503–1, as well as the other provisions of this paragraph (b)(2), a plan or issuer must treat a rescission of coverage (whether or not the rescission has an adverse effect on any particular benefit at that time) as an adverse benefit determination. (Rescissions of coverage are subject to the requirements of § 2590.715–2712 of this part.)

(B) *Expedited notification of benefit determinations involving urgent care.* The requirements of 29 CFR 2560.503–1(f)(2)(i) (which generally provide, among other things, in the case of urgent care claims for notification of the plan's benefit determination (whether adverse or not) as soon as possible, taking into account the medical exigencies, but not later than 72 hours after receipt of the claim) continue to apply to the plan and issuer. For purposes of this paragraph (b)(2)(ii)(B), a claim involving urgent care has the meaning given in 29 CFR 2560.503–1(m)(1), as determined by the attending provider, and the plan or issuer shall defer to such determination of the attending provider.

(C) *Full and fair review.* A plan and issuer must allow a claimant to review the claim file and to present evidence and testimony as part of the internal claims and appeals process. Specifically, in addition to complying with the requirements of 29 CFR 2560.503–1(h)(2)—

(1) The plan or issuer must provide the claimant, free of charge, with any new or additional evidence considered, relied upon, or generated by the plan or issuer (or at the direction of the plan or issuer) in connection with the claim; such evidence must be provided as soon as possible and sufficiently in advance of the date on which the notice of final internal adverse benefit determination is required to be provided under 29 CFR 2560.503–1(i) to give the claimant a reasonable opportunity to respond prior to that date; and

(2) Before the plan or issuer can issue a final internal adverse benefit determination based on a new or additional rationale, the claimant must be provided, free of charge, with the rationale; the rationale must be provided as soon as possible and sufficiently in advance of the date on which the notice of final internal adverse benefit determination is required to be provided under 29 CFR 2560.503–1(i) to give the claimant a reasonable opportunity to respond prior to that date.

(D) *Avoiding conflicts of interest.* In addition to the requirements of 29 CFR 2560.503–1(b) and (h) regarding full and fair review, the plan and issuer must ensure that all claims and appeals are adjudicated in a manner designed to ensure the independence and impartiality of the persons involved in making the decision. Accordingly, decisions regarding hiring, compensation, termination, promotion, or other similar matters with respect to any individual (such as a claims adjudicator or medical expert) must not be made based upon the likelihood that the individual will support the denial of benefits.

(E) *Notice.* A plan and issuer must provide notice to individuals, in a culturally and linguistically appropriate manner (as described in paragraph (e) of this section) that complies with the requirements of 29 CFR 2560.503–1(g) and (j). The plan and issuer must also

comply with the additional requirements of this paragraph (b)(2)(ii)(E).

(*1*) The plan and issuer must ensure that any notice of adverse benefit determination or final internal adverse benefit determination includes information sufficient to identify the claim involved (including the date of service, the health care provider, the claim amount (if applicable), and a statement describing the availability, upon request, of the diagnosis code and its corresponding meaning, and the treatment code and its corresponding meaning).

(*2*) The plan and issuer must provide to participants and beneficiaries, as soon as practicable, upon request, the diagnosis code and its corresponding meaning, and the treatment code and its corresponding meaning, associated with any adverse benefit determination or final internal adverse benefit determination. The plan or issuer must not consider a request for such diagnosis and treatment information, in itself, to be a request for an internal appeal under this paragraph (b) or an external review under paragraphs (c) and (d) of this section.

(*3*) The plan and issuer must ensure that the reason or reasons for the adverse benefit determination or final internal adverse benefit determination includes the denial code and its corresponding meaning, as well as a description of the plan's or issuer's standard, if any, that was used in denying the claim. In the case of a notice of final internal adverse benefit determination, this description must include a discussion of the decision.

(*4*) The plan and issuer must provide a description of available internal appeals and external review processes, including information regarding how to initiate an appeal.

(*5*) The plan and issuer must disclose the availability of, and contact information for, any applicable office of health insurance consumer assistance or ombudsman established under PHS Act section 2793 to assist individuals with the internal claims and appeals and external review processes.

(F) *Deemed exhaustion of internal claims and appeals processes*—(*1*) In the case of a plan or issuer that fails to adhere to all the requirements of this paragraph (b)(2) with respect to a claim, the claimant is deemed to have exhausted the internal claims and appeals process of this paragraph (b), except as provided in paragraph (b)(2)(ii)(F)(*2*) of this section. Accordingly, the claimant may initiate an external review under paragraph (c) or (d) of this section, as applicable. The claimant is also entitled to pursue any available remedies under section 502(a) of ERISA or under State law, as applicable, on the basis that the plan or issuer has failed to provide a reasonable internal claims and appeals process that would yield a decision on the merits of the claim. If a claimant chooses to pursue remedies under section 502(a) of ERISA under such circumstances, the claim or appeal is deemed denied on review without the exercise of discretion by an appropriate fiduciary.

(*2*) Notwithstanding paragraph (b)(2)(ii)(F)(*1*) of this section, the internal claims and appeals process of this paragraph (b) will not be deemed exhausted based on *de minimis* violations that do not cause, and are not likely to cause, prejudice or harm to the claimant so long as the plan or issuer demonstrates that the violation was for good cause or due to matters beyond the control of the plan or issuer and that the violation occurred in the context of an ongoing, good faith exchange of information between the plan and the claimant. This exception is not available if the violation is part of a pattern or practice of violations by the plan or issuer. The claimant may request a written explanation of the violation from the plan or issuer, and the plan or issuer must provide such explanation within 10 days, including a specific description of its bases, if any, for asserting that the violation should not cause the internal claims and appeals process of this paragraph (b) to be deemed exhausted. If an external reviewer or a court rejects the claimant's request for immediate review under paragraph (b)(2)(ii)(F)(*1*) of this section on the basis that the plan met the standards for the exception under this paragraph (b)(2)(ii)(F)(*2*), the claimant has the right to resubmit and pursue the internal appeal of the claim. In such a case, within a reasonable time

after the external reviewer or court rejects the claim for immediate review (not to exceed 10 days), the plan shall provide the claimant with notice of the opportunity to resubmit and pursue the internal appeal of the claim. Time periods for re-filing the claim shall begin to run upon claimant's receipt of such notice.

(iii) *Requirement to provide continued coverage pending the outcome of an appeal.* A plan and issuer subject to the requirements of this paragraph (b)(2) are required to provide continued coverage pending the outcome of an appeal. For this purpose, the plan and issuer must comply with the requirements of 29 CFR 2560.503–1(f)(2)(ii), which generally provides that benefits for an ongoing course of treatment cannot be reduced or terminated without providing advance notice and an opportunity for advance review.

(c) *State standards for external review*—(1) *In general.* (i) If a State external review process that applies to and is binding on a health insurance issuer offering group health insurance coverage includes at a minimum the consumer protections in the NAIC Uniform Model Act, then the issuer must comply with the applicable State external review process and is not required to comply with the Federal external review process of paragraph (d) of this section. In such a case, to the extent that benefits under a group health plan are provided through health insurance coverage, the group health plan is not required to comply with either this paragraph (c) or the Federal external review process of paragraph (d) of this section.

(ii) To the extent that a group health plan provides benefits other than through health insurance coverage (that is, the plan is self-insured) and is subject to a State external review process that applies to and is binding on the plan (for example, is not preempted by ERISA) and the State external review process includes at a minimum the consumer protections in the NAIC Uniform Model Act, then the plan must comply with the applicable State external review process and is not required to comply with the Federal external review process of paragraph (d) of this section.

(iii) If a plan or issuer is not required under paragraph (c)(1)(i) or (c)(1)(ii) of this section to comply with the requirements of this paragraph (c), then the plan or issuer must comply with the Federal external review process of paragraph (d) of this section, except to the extent, in the case of a plan, the plan is not required under paragraph (c)(1)(i) of this section to comply with paragraph (d) of this section.

(2) *Minimum standards for State external review processes.* An applicable State external review process must meet all the minimum consumer protections in this paragraph (c)(2). The Department of Health and Human Services will determine whether State external review processes meet these requirements.

(i) The State process must provide for the external review of adverse benefit determinations (including final internal adverse benefit determinations) by issuers (or, if applicable, plans) that are based on the issuer's (or plan's) requirements for medical necessity, appropriateness, health care setting, level of care, or effectiveness of a covered benefit.

(ii) The State process must require issuers (or, if applicable, plans) to provide effective written notice to claimants of their rights in connection with an external review for an adverse benefit determination.

(iii) To the extent the State process requires exhaustion of an internal claims and appeals process, exhaustion must be unnecessary where the issuer (or, if applicable, the plan) has waived the requirement, the issuer (or the plan) is considered to have exhausted the internal claims and appeals process under applicable law (including by failing to comply with any of the requirements for the internal appeal process, as outlined in paragraph (b)(2) of this section), or the claimant has applied for expedited external review at the same time as applying for an expedited internal appeal.

(iv) The State process provides that the issuer (or, if applicable, the plan) against which a request for external review is filed must pay the cost of the

IRO for conducting the external review. Notwithstanding this requirement, the State external review process may require a nominal filing fee from the claimant requesting an external review. For this purpose, to be considered nominal, a filing fee must not exceed $25, it must be refunded to the claimant if the adverse benefit determination (or final internal adverse benefit determination) is reversed through external review, it must be waived if payment of the fee would impose an undue financial hardship, and the annual limit on filing fees for any claimant within a single plan year must not exceed $75.

(v) The State process may not impose a restriction on the minimum dollar amount of a claim for it to be eligible for external review. Thus, the process may not impose, for example, a $500 minimum claims threshold.

(vi) The State process must allow at least four months after the receipt of a notice of an adverse benefit determination or final internal adverse benefit determination for a request for an external review to be filed.

(vii) The State process must provide that IROs will be assigned on a random basis or another method of assignment that assures the independence and impartiality of the assignment process (such as rotational assignment) by a State or independent entity, and in no event selected by the issuer, plan, or the individual.

(viii) The State process must provide for maintenance of a list of approved IRO qualified to conduct the external review based on the nature of the health care service that is the subject of the review. The State process must provide for approval only of IROs that are accredited by a nationally recognized private accrediting organization.

(ix) The State process must provide that any approved IRO has no conflicts of interest that will influence its independence. Thus, the IRO may not own or control, or be owned or controlled by a health insurance issuer, a group health plan, the sponsor of a group health plan, a trade association of plans or issuers, or a trade association of health care providers. The State process must further provide that the IRO and the clinical reviewer assigned to conduct an external review may not have a material professional, familial, or financial conflict of interest with the issuer or plan that is the subject of the external review; the claimant (and any related parties to the claimant) whose treatment is the subject of the external review; any officer, director, or management employee of the issuer; the plan administrator, plan fiduciaries, or plan employees; the health care provider, the health care provider's group, or practice association recommending the treatment that is subject to the external review; the facility at which the recommended treatment would be provided; or the developer or manufacturer of the principal drug, device, procedure, or other therapy being recommended.

(x) The State process allows the claimant at least five business days to submit to the IRO in writing additional information that the IRO must consider when conducting the external review and it requires that the claimant is notified of the right to do so. The process must also require that any additional information submitted by the claimant to the IRO must be forwarded to the issuer (or, if applicable, the plan) within one business day of receipt by the IRO.

(xi) The State process must provide that the decision is binding on the plan or issuer, as well as the claimant, except to the extent other remedies are available under State or Federal law, and except that the requirement that the decision be binding shall not preclude the plan or issuer from making payment on the claim or otherwise providing benefits at any time, including after a final external review decision that denies the claim or otherwise fails to require such payment or benefits. For this purpose, the plan or issuer must provide benefits (including by making payment on the claim) pursuant to the final external review decision without delay, regardless of whether the plan or issuer intends to seek judicial review of the external review decision and unless or until there is a judicial decision otherwise.

(xii) The State process must require, for standard external review, that the IRO provide written notice to the issuer (or, if applicable, the plan) and

the claimant of its decision to uphold or reverse the adverse benefit determination (or final internal adverse benefit determination) within no more than 45 days after the receipt of the request for external review by the IRO.

(xiii) The State process must provide for an expedited external review if the adverse benefit determination (or final internal adverse benefit determination) concerns an admission, availability of care, continued stay, or health care service for which the claimant received emergency services, but has not been discharged from a facility; or involves a medical condition for which the standard external review timeframe would seriously jeopardize the life or health of the claimant or jeopardize the claimant's ability to regain maximum function. As expeditiously as possible but within no more than 72 hours after the receipt of the request for expedited external review by the IRO, the IRO must make its decision to uphold or reverse the adverse benefit determination (or final internal adverse benefit determination) and notify the claimant and the issuer (or, if applicable, the plan) of the determination. If the notice is not in writing, the IRO must provide written confirmation of the decision within 48 hours after the date of the notice of the decision.

(xiv) The State process must require that issuers (or, if applicable, plans) include a description of the external review process in or attached to the summary plan description, policy, certificate, membership booklet, outline of coverage, or other evidence of coverage it provides to participants, beneficiaries, or enrollees, substantially similar to what is set forth in section 17 of the NAIC Uniform Model Act.

(xv) The State process must require that IROs maintain written records and make them available upon request to the State, substantially similar to what is set forth in section 15 of the NAIC Uniform Model Act.

(xvi) The State process follows procedures for external review of adverse benefit determinations (or final internal adverse benefit determinations) involving experimental or investigational treatment, substantially similar to what is set forth in section 10 of the NAIC Uniform Model Act.

(3) *Transition period for external review processes.* (i) Through December 31, 2011, an applicable State external review process applicable to a health insurance issuer or group health plan is considered to meet the requirements of PHS Act section 2719(b). Accordingly, through December 31, 2011, an applicable State external review process will be considered binding on the issuer or plan (in lieu of the requirements of the Federal external review process). If there is no applicable State external review process, the issuer or plan is required to comply with the requirements of the Federal external review process in paragraph (d) of this section.

(ii) For final internal adverse benefit determinations (or, in the case of simultaneous internal appeal and external review, adverse benefit determinations) provided on or after January 1, 2012, the Federal external review process will apply unless the Department of Health and Human Services determines that a State law meets all the minimum standards of paragraph (c)(2) of this section.

(d) *Federal external review process.* A plan or issuer not subject to an applicable State external review process under paragraph (c) of this section must provide an effective Federal external review process in accordance with this paragraph (d) (except to the extent, in the case of a plan, the plan is described in paragraph (c)(1)(i) of this section as not having to comply with this paragraph (d)). In the case of health insurance coverage offered in connection with a group health plan, if either the plan or the issuer complies with the Federal external review process of this paragraph (d), then the obligation to comply with this paragraph (d) is satisfied for both the plan and the issuer with respect to the health insurance coverage. A Multi State Plan or MSP, as defined by 45 CFR 800.20, must provide an effective Federal external review process in accordance with this paragraph (d). A Multi State Plan or MSP, as defined by 45 CFR 800.20, must provide an effective Federal external review process in accordance with this paragraph (d).

(1) *Scope*—(i) *In general.* Subject to the suspension provision in paragraph (d)(1)(ii) of this section and except to

the extent provided otherwise by the Secretary in guidance, the Federal external review process established pursuant to this paragraph (d) applies, at a minimum, to any adverse benefit determination or final internal adverse benefit determination (as defined in paragraphs (a)(2)(i) and (a)(2)(v) of this section), except that a denial, reduction, termination, or a failure to provide payment for a benefit based on a determination that a participant or beneficiary fails to meet the requirements for eligibility under the terms of a group health plan is not eligible for the Federal external review process under this paragraph (d).

(ii) *Suspension of general rule.* Unless or until this suspension is revoked in guidance by the Secretary, with respect to claims for which external review has not been initiated before September 20, 2011, the Federal external review process established pursuant to this paragraph (d) applies only to:

(A) An adverse benefit determination (including a final internal adverse benefit determination) by a plan or issuer that involves medical judgment (including, but not limited to, those based on the plan's or issuer's requirements for medical necessity, appropriateness, health care setting, level of care, or effectiveness of a covered benefit; or its determination that a treatment is experimental or investigational), as determined by the external reviewer; and

(B) A rescission of coverage (whether or not the rescission has any effect on any particular benefit at that time).

(iii) *Examples.* This rules of paragraph (d)(1)(ii) of this section are illustrated by the following examples:

Example 1. (i) *Facts.* A group health plan provides coverage for 30 physical therapy visits generally. After the 30th visit, coverage is provided only if the service is preauthorized pursuant to an approved treatment plan that takes into account medical necessity using the plan's definition of the term. Individual *A* seeks coverage for a 31st physical therapy visit. *A*'s health care provider submits a treatment plan for approval, but it is not approved by the plan, so coverage for the 31st visit is not preauthorized. With respect to the 31st visit, *A* receives a notice of final internal adverse benefit determination stating that the maximum visit limit is exceeded.

(ii) *Conclusion.* In this *Example 1,* the plan's denial of benefits is based on medical necessity and involves medical judgment. Accordingly, the claim is eligible for external review during the suspension period under paragraph (d)(1)(ii) of this section. Moreover, the plan's notification of final internal adverse benefit determination is inadequate under paragraphs (b)(2)(i) and (b)(2)(ii)(E)(*3*) of this section because it fails to make clear that the plan will pay for more than 30 visits if the service is preauthorized pursuant to an approved treatment plan that takes into account medical necessity using the plan's definition of the term. Accordingly, the notice of final internal adverse benefit determination should refer to the plan provision governing the 31st visit and should describe the plan's standard for medical necessity, as well as how the treatment fails to meet the plan's standard.

Example 2. (i) *Facts.* A group health plan does not provide coverage for services provided out of network, unless the service cannot effectively be provided in network. Individual *B* seeks coverage for a specialized medical procedure from an out-of-network provider because *B* believes that the procedure cannot be effectively provided in network. *B* receives a notice of final internal adverse benefit determination stating that the claim is denied because the provider is out-of-network.

(ii) *Conclusion.* In this *Example 2,* the plan's denial of benefits is based on whether a service can effectively be provided in network and, therefore, involves medical judgment. Accordingly, the claim is eligible for external review during the suspension period under paragraph (d)(1)(ii) of this section. Moreover, the plan's notice of final internal adverse benefit determination is inadequate under paragraphs (b)(2)(i) and (b)(2)(ii)(E)(*3*) of this section because the plan does provide benefits for services on an out-of-network basis if the services cannot effectively be provided in network. Accordingly, the notice of final internal adverse benefit determination is required to refer to the exception to the out-of-network exclusion and should describe the plan's standards for determining effectiveness of services, as well as how services available to the claimant within the plan's network meet the plan's standard for effectiveness of services.

(2) *External review process standards.* The Federal external review process established pursuant to this paragraph (d) will be similar to the process set forth in the NAIC Uniform Model Act and will meet standards issued by the Secretary. These standards will comply with all of the requirements described in this paragraph (d)(2).

(i) These standards will describe how a claimant initiates an external review, procedures for preliminary reviews to determine whether a claim is

eligible for external review, minimum qualifications for IROs, a process for approving IROs eligible to be assigned to conduct external reviews, a process for random assignment of external reviews to approved IROs, standards for IRO decisionmaking, and rules for providing notice of a final external review decision.

(ii) These standards will provide an expedited external review process for—

(A) An adverse benefit determination, if the adverse benefit determination involves a medical condition of the claimant for which the timeframe for completion of an expedited internal appeal under paragraph (b) of this section would seriously jeopardize the life or health of the claimant, or would jeopardize the claimant's ability to regain maximum function and the claimant has filed a request for an expedited internal appeal under paragraph (b) of this section; or

(B) A final internal adverse benefit determination, if the claimant has a medical condition where the timeframe for completion of a standard external review pursuant to paragraph (d)(3) of this section would seriously jeopardize the life or health of the claimant or would jeopardize the claimant's ability to regain maximum function, or if the final internal adverse benefit determination concerns an admission, availability of care, continued stay or health care service for which the claimant received emergency services, but has not been discharged from a facility.

(iii) With respect to claims involving experimental or investigational treatments, these standards will also provide additional consumer protections to ensure that adequate clinical and scientific experience and protocols are taken into account as part of the external review process.

(iv) These standards will provide that an external review decision is binding on the plan or issuer, as well as the claimant, except to the extent other remedies are available under State or Federal law, and except that the requirement that the decision be binding shall not preclude the plan or issuer from making payment on the claim or otherwise providing benefits at any time, including after a final external review decision that denies the claim or otherwise fails to require such payment or benefits. For this purpose, the plan or issuer must provide any benefits (including by making payment on the claim) pursuant to the final external review decision without delay, regardless of whether the plan or issuer intends to seek judicial review of the external review decision and unless or until there is a judicial decision otherwise.

(v) These standards may establish external review reporting requirements for IROs.

(vi) These standards will establish additional notice requirements for plans and issuers regarding disclosures to participants and beneficiaries describing the Federal external review procedures (including the right to file a request for an external review of an adverse benefit determination or a final internal adverse benefit determination in the summary plan description, policy, certificate, membership booklet, outline of coverage, or other evidence of coverage it provides to participants or beneficiaries.

(vii) These standards will require plans and issuers to provide information relevant to the processing of the external review, including, but not limited to, the information considered and relied on in making the adverse benefit determination or final internal adverse benefit determination.

(e) *Form and manner of notice*—(1) *In general*. For purposes of this section, a group health plan and a health insurance issuer offering group health insurance coverage are considered to provide relevant notices in a culturally and linguistically appropriate manner if the plan or issuer meets all the requirements of paragraph (e)(2) of this section with respect to the applicable non-English languages described in paragraph (e)(3) of this section.

(2) *Requirements*—(i) The plan or issuer must provide oral language services (such as a telephone customer assistance hotline) that include answering questions in any applicable non-English language and providing assistance with filing claims and appeals (including external review) in any applicable non-English language;

(ii) The plan or issuer must provide, upon request, a notice in any applicable non-English language; and

(iii) The plan or issuer must include in the English versions of all notices, a statement prominently displayed in any applicable non-English language clearly indicating how to access the language services provided by the plan or issuer.

(3) *Applicable non-English language.* With respect to an address in any United States county to which a notice is sent, a non-English language is an applicable non-English language if ten percent or more of the population residing in the county is literate only in the same non-English language, as determined in guidance published by the Secretary.

(f) *Secretarial authority.* The Secretary may determine that the external review process of a group health plan or health insurance issuer, in operation as of March 23, 2010, is considered in compliance with the applicable process established under paragraph (c) or (d) of this section if it substantially meets the requirements of paragraph (c) or (d) of this section, as applicable.

(g) *Applicability date.* The provisions of this section apply for plan years beginning on or after September 23, 2010. See § 2590.715–1251 of this part for determining the application of this section to grandfathered health plans (providing that these rules regarding internal claims and appeals and external review processes do not apply to grandfathered health plans).

[75 FR 43354, July 23, 2010, as amended at 76 FR 37230, June 24, 2011; 76 FR 44492, July 26, 2011; 78 FR 68286, Nov. 13, 2013; 78 FR 68286, Nov. 13, 2013]

§ 2590.715–2719A Patient protections.

(a) *Choice of health care professional*–(1) *Designation of primary care provider*—(i) *In general.* If a group health plan, or a health insurance issuer offering group health insurance coverage, requires or provides for designation by a participant or beneficiary of a participating primary care provider, then the plan or issuer must permit each participant or beneficiary to designate any participating primary care provider who is available to accept the participant or beneficiary. In such a case, the plan or issuer must comply with the rules of paragraph (a)(4) of this section by informing each participant of the terms of the plan or health insurance coverage regarding designation of a primary care provider.

(ii) *Example.* The rules of this paragraph (a)(1) are illustrated by the following example:

Example. (i) *Facts.* A group health plan requires individuals covered under the plan to designate a primary care provider. The plan permits each individual to designate any primary care provider participating in the plan's network who is available to accept the individual as the individual's primary care provider. If an individual has not designated a primary care provider, the plan designates one until one has been designated by the individual. The plan provides a notice that satisfies the requirements of paragraph (a)(4) of this section regarding the ability to designate a primary care provider.

(ii) *Conclusion.* In this *Example,* the plan has satisfied the requirements of paragraph (a) of this section.

(2) *Designation of pediatrician as primary care provider*—(i) *In general.* If a group health plan, or a health insurance issuer offering group health insurance coverage, requires or provides for the designation of a participating primary care provider for a child by a participant or beneficiary, the plan or issuer must permit the participant or beneficiary to designate a physician (allopathic or osteopathic) who specializes in pediatrics as the child's primary care provider if the provider participates in the network of the plan or issuer and is available to accept the child. In such a case, the plan or issuer must comply with the rules of paragraph (a)(4) of this section by informing each participant of the terms of the plan or health insurance coverage regarding designation of a pediatrician as the child's primary care provider.

(ii) *Construction.* Nothing in paragraph (a)(2)(i) of this section is to be construed to waive any exclusions of coverage under the terms and conditions of the plan or health insurance coverage with respect to coverage of pediatric care.

(iii) *Examples.* The rules of this paragraph (a)(2) are illustrated by the following examples:

Example 1. (i) *Facts.* A group health plan's HMO designates for each participant a physician who specializes in internal medicine to serve as the primary care provider for the participant and any beneficiaries. Participant *A* requests that Pediatrician *B* be designated as the primary care provider for *A*'s child. *B* is a participating provider in the HMO's network.

(ii) *Conclusion.* In this *Example 1,* the HMO must permit *A*'s designation of *B* as the primary care provider for *A*'s child in order to comply with the requirements of this paragraph (a)(2).

Example 2. (i) *Facts.* Same facts as *Example 1,* except that *A* takes *A*'s child to *B* for treatment of the child's severe shellfish allergies. *B* wishes to refer *A*'s child to an allergist for treatment. The HMO, however, does not provide coverage for treatment of food allergies, nor does it have an allergist participating in its network, and it therefore refuses to authorize the referral.

(ii) *Conclusion.* In this *Example 2,* the HMO has not violated the requirements of this paragraph (a)(2) because the exclusion of treatment for food allergies is in accordance with the terms of *A*'s coverage.

(3) *Patient access to obstetrical and gynecological care*—(i) *General rights*—(A) *Direct access.* A group health plan, or a health insurance issuer offering group health insurance coverage, described in paragraph (a)(3)(ii) of this section may not require authorization or referral by the plan, issuer, or any person (including a primary care provider) in the case of a female participant or beneficiary who seeks coverage for obstetrical or gynecological care provided by a participating health care professional who specializes in obstetrics or gynecology. In such a case, the plan or issuer must comply with the rules of paragraph (a)(4) of this section by informing each participant that the plan may not require authorization or referral for obstetrical or gynecological care by a participating health care professional who specializes in obstetrics or gynecology. The plan or issuer may require such a professional to agree to otherwise adhere to the plan's or issuer's policies and procedures, including procedures regarding referrals and obtaining prior authorization and providing services pursuant to a treatment plan (if any) approved by the plan or issuer. For purposes of this paragraph (a)(3), a health care professional who specializes in obstetrics or gynecology is any individual (including a person other than a physician) who is authorized under applicable State law to provide obstetrical or gynecological care.

(B) *Obstetrical and gynecological care.* A group health plan or health insurance issuer described in paragraph (a)(3)(ii) of this section must treat the provision of obstetrical and gynecological care, and the ordering of related obstetrical and gynecological items and services, pursuant to the direct access described under paragraph (a)(3)(i)(A) of this section, by a participating health care professional who specializes in obstetrics or gynecology as the authorization of the primary care provider.

(ii) *Application of paragraph.* A group health plan, or a health insurance issuer offering group health insurance coverage, is described in this paragraph (a)(3) if the plan or issuer—

(A) Provides coverage for obstetrical or gynecological care; and

(B) Requires the designation by a participant or beneficiary of a participating primary care provider.

(iii) *Construction.* Nothing in paragraph (a)(3)(i) of this section is to be construed to—

(A) Waive any exclusions of coverage under the terms and conditions of the plan or health insurance coverage with respect to coverage of obstetrical or gynecological care; or

(B) Preclude the group health plan or health insurance issuer involved from requiring that the obstetrical or gynecological provider notify the primary care health care professional or the plan or issuer of treatment decisions.

(iv) *Examples.* The rules of this paragraph (a)(3) are illustrated by the following examples:

Example 1. (i) *Facts.* A group health plan requires each participant to designate a physician to serve as the primary care provider for the participant and the participant's family. Participant *A,* a female, requests a gynecological exam with Physician *B,* an in-network physician specializing in gynecological care. The group health plan requires prior authorization from *A*'s designated primary care provider for the gynecological exam.

(ii) *Conclusion.* In this *Example 1,* the group health plan has violated the requirements of this paragraph (a)(3) because the plan requires prior authorization from *A*'s primary

care provider prior to obtaining gynecological services.

Example 2. (i) *Facts.* Same facts as *Example 1* except that *A* seeks gynecological services from *C*, an out-of-network provider.

(ii) *Conclusion.* In this *Example 2*, the group health plan has not violated the requirements of this paragraph (a)(3) by requiring prior authorization because *C* is not a participating health care provider.

Example 3. (i) *Facts.* Same facts as *Example 1* except that the group health plan only requires *B* to inform *A*'s designated primary care physician of treatment decisions.

(ii) *Conclusion.* In this *Example 3*, the group health plan has not violated the requirements of this paragraph (a)(3) because *A* has direct access to *B* without prior authorization. The fact that the group health plan requires notification of treatment decisions to the designated primary care physician does not violate this paragraph (a)(3).

Example 4. (i) *Facts.* A group health plan requires each participant to designate a physician to serve as the primary care provider for the participant and the participant's family. The group health plan requires prior authorization before providing benefits for uterine fibroid embolization.

(ii) *Conclusion.* In this *Example 4*, the plan requirement for prior authorization before providing benefits for uterine fibroid embolization does not violate the requirements of this paragraph (a)(3) because, though the prior authorization requirement applies to obstetrical services, it does not restrict access to any providers specializing in obstetrics or gynecology.

(4) *Notice of right to designate a primary care provider*—(i) *In general.* If a group health plan or health insurance issuer requires the designation by a participant or beneficiary of a primary care provider, the plan or issuer must provide a notice informing each participant of the terms of the plan or health insurance coverage regarding designation of a primary care provider and of the rights—

(A) Under paragraph (a)(1)(i) of this section, that any participating primary care provider who is available to accept the participant or beneficiary can be designated;

(B) Under paragraph (a)(2)(i) of this section, with respect to a child, that any participating physician who specializes in pediatrics can be designated as the primary care provider; and

(C) Under paragraph (a)(3)(i) of this section, that the plan may not require authorization or referral for obstetrical or gynecological care by a participating health care professional who specializes in obstetrics or gynecology.

(ii) *Timing.* The notice described in paragraph (a)(4)(i) of this section must be included whenever the plan or issuer provides a participant with a summary plan description or other similar description of benefits under the plan or health insurance coverage.

(iii) *Model language.* The following model language can be used to satisfy the notice requirement described in paragraph (a)(4)(i) of this section:

(A) For plans and issuers that require or allow for the designation of primary care providers by participants or beneficiaries, insert:

[Name of group health plan or health insurance issuer] generally [requires/allows] the designation of a primary care provider. You have the right to designate any primary care provider who participates in our network and who is available to accept you or your family members. [If the plan or health insurance coverage designates a primary care provider automatically, insert: Until you make this designation, [name of group health plan or health insurance issuer] designates one for you.] For information on how to select a primary care provider, and for a list of the participating primary care providers, contact the [plan administrator or issuer] at [insert contact information].

(B) For plans and issuers that require or allow for the designation of a primary care provider for a child, add:

For children, you may designate a pediatrician as the primary care provider.

(C) For plans and issuers that provide coverage for obstetric or gynecological care and require the designation by a participant or beneficiary of a primary care provider, add:

You do not need prior authorization from [name of group health plan or issuer] or from any other person (including a primary care provider) in order to obtain access to obstetrical or gynecological care from a health care professional in our network who specializes in obstetrics or gynecology. The health care professional, however, may be required to comply with certain procedures, including obtaining prior authorization for certain services, following a pre-approved treatment plan, or procedures for making referrals. For a list of participating health care professionals who specialize in obstetrics or gynecology, contact the [plan administrator or issuer] at [insert contact information].

(b) *Coverage of emergency services*—(1) *Scope*. If a group health plan, or a health insurance issuer offering group health insurance coverage, provides any benefits with respect to services in an emergency department of a hospital, the plan or issuer must cover emergency services (as defined in paragraph (b)(4)(ii) of this section) consistent with the rules of this paragraph (b).

(2) *General rules*. A plan or issuer subject to the requirements of this paragraph (b) must provide coverage for emergency services in the following manner—

(i) Without the need for any prior authorization determination, even if the emergency services are provided on an out-of-network basis;

(ii) Without regard to whether the health care provider furnishing the emergency services is a participating network provider with respect to the services;

(iii) If the emergency services are provided out of network, without imposing any administrative requirement or limitation on coverage that is more restrictive than the requirements or limitations that apply to emergency services received from in-network providers;

(iv) If the emergency services are provided out of network, by complying with the cost-sharing requirements of paragraph (b)(3) of this section; and

(v) Without regard to any other term or condition of the coverage, other than—

(A) The exclusion of or coordination of benefits;

(B) An affiliation or waiting period permitted under part 7 of ERISA, part A of title XXVII of the PHS Act, or chapter 100 of the Internal Revenue Code; or

(C) Applicable cost sharing.

(3) *Cost-sharing requirements*—(i) *Copayments and coinsurance*. Any cost-sharing requirement expressed as a copayment amount or coinsurance rate imposed with respect to a participant or beneficiary for out-of-network emergency services cannot exceed the cost-sharing requirement imposed with respect to a participant or beneficiary if the services were provided in-network. However, a participant or beneficiary may be required to pay, in addition to the in-network cost sharing, the excess of the amount the out-of-network provider charges over the amount the plan or issuer is required to pay under this paragraph (b)(3)(i). A group health plan or health insurance issuer complies with the requirements of this paragraph (b)(3) if it provides benefits with respect to an emergency service in an amount equal to the greatest of the three amounts specified in paragraphs (b)(3)(i)(A), (b)(3)(i)(B), and (b)(3)(i)(C) of this section (which are adjusted for in-network cost-sharing requirements).

(A) The amount negotiated with in-network providers for the emergency service furnished, excluding any in-network copayment or coinsurance imposed with respect to the participant or beneficiary. If there is more than one amount negotiated with in-network providers for the emergency service, the amount described under this paragraph (b)(3)(i)(A) is the median of these amounts, excluding any in-network copayment or coinsurance imposed with respect to the participant or beneficiary. In determining the median described in the preceding sentence, the amount negotiated with each in-network provider is treated as a separate amount (even if the same amount is paid to more than one provider). If there is no per-service amount negotiated with in-network providers (such as under a capitation or other similar payment arrangement), the amount under this paragraph (b)(3)(i)(A) is disregarded.

(B) The amount for the emergency service calculated using the same method the plan generally uses to determine payments for out-of-network services (such as the usual, customary, and reasonable amount), excluding any in-network copayment or coinsurance imposed with respect to the participant or beneficiary. The amount in this paragraph (b)(3)(i)(B) is determined without reduction for out-of-network cost sharing that generally applies under the plan or health insurance coverage with respect to out-of-network services. Thus, for example, if a plan generally pays 70 percent of the usual, customary, and reasonable amount for out-of-network services, the amount in

this paragraph (b)(3)(i)(B) for an emergency service is the total (that is, 100 percent) of the usual, customary, and reasonable amount for the service, not reduced by the 30 percent coinsurance that would generally apply to out-of-network services (but reduced by the in-network copayment or coinsurance that the individual would be responsible for if the emergency service had been provided in-network).

(C) The amount that would be paid under Medicare (part A or part B of title XVIII of the Social Security Act, 42 U.S.C. 1395 *et seq.*) for the emergency service, excluding any in-network copayment or coinsurance imposed with respect to the participant or beneficiary.

(ii) *Other cost sharing.* Any cost-sharing requirement other than a copayment or coinsurance requirement (such as a deductible or out-of-pocket maximum) may be imposed with respect to emergency services provided out of network if the cost-sharing requirement generally applies to out-of-network benefits. A deductible may be imposed with respect to out-of-network emergency services only as part of a deductible that generally applies to out-of-network benefits. If an out-of-pocket maximum generally applies to out-of-network benefits, that out-of-pocket maximum must apply to out-of-network emergency services.

(iii) *Examples.* The rules of this paragraph (b)(3) are illustrated by the following examples. In all of these examples, the group health plan covers benefits with respect to emergency services.

Example 1. (i) *Facts.* A group health plan imposes a 25% coinsurance responsibility on individuals who are furnished emergency services, whether provided in network or out of network. If a covered individual notifies the plan within two business days after the day an individual receives treatment in an emergency department, the plan reduces the coinsurance rate to 15%.

(ii) *Conclusion.* In this *Example 1,* the requirement to notify the plan in order to receive a reduction in the coinsurance rate does not violate the requirement that the plan cover emergency services without the need for any prior authorization determination. This is the result even if the plan required that it be notified before or at the time of receiving services at the emergency department in order to receive a reduction in the coinsurance rate.

Example 2. (i) *Facts.* A group health plan imposes a $60 copayment on emergency services without preauthorization, whether provided in network or out of network. If emergency services are preauthorized, the plan waives the copayment, even if it later determines the medical condition was not an emergency medical condition.

(ii) *Conclusion.* In this *Example 2,* by requiring an individual to pay more for emergency services if the individual does not obtain prior authorization, the plan violates the requirement that the plan cover emergency services without the need for any prior authorization determination. (By contrast, if, to have the copayment waived, the plan merely required that it be notified rather than a prior authorization, then the plan would not violate the requirement that the plan cover emergency services without the need for any prior authorization determination.)

Example 3. (i) *Facts.* A group health plan covers individuals who receive emergency services with respect to an emergency medical condition from an out-of-network provider. The plan has agreements with in-network providers with respect to a certain emergency service. Each provider has agreed to provide the service for a certain amount. Among all the providers for the service: one has agreed to accept $85, two have agreed to accept $100, two have agreed to accept $110, three have agreed to accept $120, and one has agreed to accept $150. Under the agreement, the plan agrees to pay the providers 80% of the agreed amount, with the individual receiving the service responsible for the remaining 20%.

(ii) *Conclusion.* In this *Example 3,* the values taken into account in determining the median are $85, $100, $100, $110, $110, $120, $120, $120, and $150. Therefore, the median amount among those agreed to for the emergency service is $110, and the amount under paragraph (b)(3)(i)(A) of this section is 80% of $110 ($88).

Example 4. (i) *Facts.* Same facts as *Example 3.* Subsequently, the plan adds another provider to its network, who has agreed to accept $150 for the emergency service.

(ii) *Conclusion.* In this *Example 4,* the median amount among those agreed to for the emergency service is $115. (Because there is no one middle amount, the median is the average of the two middle amounts, $110 and $120.) Accordingly, the amount under paragraph (b)(3)(i)(A) of this section is 80% of $115 ($92).

Example 5. (i) *Facts.* Same facts as *Example 4.* An individual covered by the plan receives the emergency service from an out-of-network provider, who charges $125 for the service. With respect to services provided by out-of-network providers generally, the plan reimburses covered individuals 50% of the reasonable amount charged by the provider for

medical services. For this purpose, the reasonable amount for any service is based on information on charges by all providers collected by a third party, on a zip code by zip code basis, with the plan treating charges at a specified percentile as reasonable. For the emergency service received by the individual, the reasonable amount calculated using this method is $116. The amount that would be paid under Medicare for the emergency service, excluding any copayment or coinsurance for the service, is $80.

(ii) *Conclusion*. In this *Example 5*, the plan is responsible for paying $92.80, 80% of $116. The median amount among those agreed to for the emergency service is $115 and the amount the plan would pay is $92 (80% of $115); the amount calculated using the same method the plan uses to determine payments for out-of-network services—$116—excluding the in-network 20% coinsurance, is $92.80; and the Medicare payment is $80. Thus, the greatest amount is $92.80. The individual is responsible for the remaining $32.20 charged by the out-of-network provider.

Example 6. (i) *Facts*. Same facts as *Example 5*. The group health plan generally imposes a $250 deductible for in-network health care. With respect to all health care provided by out-of-network providers, the plan imposes a $500 deductible. (Covered in-network claims are credited against the deductible.) The individual has incurred and submitted $260 of covered claims prior to receiving the emergency service out of network.

(ii) *Conclusion*. In this *Example 6*, the plan is not responsible for paying anything with respect to the emergency service furnished by the out-of-network provider because the covered individual has not satisfied the higher deductible that applies generally to all health care provided out of network. However, the amount the individual is required to pay is credited against the deductible.

(4) *Definitions*. The definitions in this paragraph (b)(4) govern in applying the provisions of this paragraph (b).

(i) *Emergency medical condition*. The term *emergency medical condition* means a medical condition manifesting itself by acute symptoms of sufficient severity (including severe pain) so that a prudent layperson, who possesses an average knowledge of health and medicine, could reasonably expect the absence of immediate medical attention to result in a condition described in clause (i), (ii), or (iii) of section 1867(e)(1)(A) of the Social Security Act (42 U.S.C. 1395dd(e)(1)(A)). (In that provision of the Social Security Act, clause (i) refers to placing the health of the individual (or, with respect to a pregnant woman, the health of the woman or her unborn child) in serious jeopardy; clause (ii) refers to serious impairment to bodily functions; and clause (iii) refers to serious dysfunction of any bodily organ or part.)

(ii) *Emergency services*. The term *emergency services* means, with respect to an emergency medical condition—

(A) A medical screening examination (as required under section 1867 of the Social Security Act, 42 U.S.C. 1395dd) that is within the capability of the emergency department of a hospital, including ancillary services routinely available to the emergency department to evaluate such emergency medical condition, and

(B) Such further medical examination and treatment, to the extent they are within the capabilities of the staff and facilities available at the hospital, as are required under section 1867 of the Social Security Act (42 U.S.C. 1395dd) to stabilize the patient.

(iii) *Stabilize*. The term *to stabilize*, with respect to an emergency medical condition (as defined in paragraph (b)(4)(i) of this section) has the meaning given in section 1867(e)(3) of the Social Security Act (42 U.S.C. 1395dd(e)(3)).

(c) *Applicability date*. The provisions of this section apply for plan years beginning on or after September 23, 2010. *See* § 2590.715–1251 of this part for determining the application of this section to grandfathered health plans (providing that these rules regarding patient protections do not apply to grandfathered health plans).

[75 FR 37232, June 28, 2010]

Subpart D—General Provisions Related to Subparts B and C

SOURCE: 62 FR 16941, Apr. 8, 1997, unless otherwise noted. Redesignated at 65 FR 82142, Dec. 27, 2000.

§ 2590.731 Preemption; State flexibility; construction.

(a) *Continued applicability of State law with respect to health insurance issuers*. Subject to paragraph (b) of this section and except as provided in paragraph (c) of this section, part 7 of subtitle B of Title I of the Act is not to be construed to supersede any provision of State law

which establishes, implements, or continues in effect any standard or requirement solely relating to health insurance issuers in connection with group health insurance coverage except to the extent that such standard or requirement prevents the application of a requirement of this part.

(b) *Continued preemption with respect to group health plans.* Nothing in part 7 of subtitle B of Title I of the Act affects or modifies the provisions of section 514 of the Act with respect to group health plans.

(c) *Special rules*—(1) *In general.* Subject to paragraph (c)(2) of this section, the provisions of part 7 of subtitle B of Title I of the Act relating to health insurance coverage offered by a health insurance issuer supersede any provision of State law which establishes, implements, or continues in effect a standard or requirement applicable to imposition of a preexisting condition exclusion specifically governed by section 701 which differs from the standards or requirements specified in such section.

(2) *Exceptions.* Only in relation to health insurance coverage offered by a health insurance issuer, the provisions of this part do not supersede any provision of State law to the extent that such provision requires special enrollment periods in addition to those required under section 701(f) of the Act.

(d) *Definitions*—(1) *State law.* For purposes of this section the term *State law* includes all laws, decisions, rules, regulations, or other State action having the effect of law, of any State. *A* law of the United States applicable only to the District of Columbia is treated as a State law rather than a law of the United States.

(2) *State.* For purposes of this section the term *State* includes a State (as defined in § 2590.701–2), any political subdivisions of a State, or any agency or instrumentality of either.

[69 FR 78778, Dec. 30, 2004; 70 FR 21147, Apr. 25, 2005; 79 FR 10312, Feb. 24, 2014]

§ 2590.732 Special rules relating to group health plans.

(a) *Group health plan*—(1) *Defined.* A group health plan means an employee welfare benefit plan to the extent that the plan provides medical care (including items and services paid for as medical care) to employees (including both current and former employees) or their dependents (as defined under the terms of the plan) directly or through insurance, reimbursement, or otherwise.

(2) *Determination of number of plans.* [Reserved]

(b) *General exception for certain small group health plans*—(1) Subject to paragraph (b)(2) of this section, the requirements of this part do not apply to any group health plan (and group health insurance coverage) for any plan year, if on the first day of the plan year, the plan has fewer than two participants who are current employees.

(2) The following requirements apply without regard to paragraph (b)(1) of this section:

(i) Section 2590.702(b) of this Part, as such section applies with respect to genetic information as a health factor.

(ii) Section 2590.702(c) of this Part, as such section applies with respect to genetic information as a health factor.

(iii) Section 2590.702(e) of this Part, as such section applies with respect to genetic information as a health factor.

(iv) Section 2590.702–1(b) of this Part.

(v) Section 2590.702–1(c) of this Part.

(vi) Section 2590.702–1(d) of this Part.

(vii) Section 2590.702–1(e) of this Part.

(viii) Section 2590.711 of this Part.

(c) *Excepted benefits*—(1) *In general.* The requirements of this Part do not apply to any group health plan (or any group health insurance coverage) in relation to its provision of the benefits described in paragraph (c)(2), (3), (4), or (5) of this section (or any combination of these benefits).

(2) *Benefits excepted in all circumstances.* The following benefits are excepted in all circumstances—

(i) Coverage only for accident (including accidental death and dismemberment);

(ii) Disability income coverage;

(iii) Liability insurance, including general liability insurance and automobile liability insurance;

(iv) Coverage issued as a supplement to liability insurance;

(v) Workers' compensation or similar coverage;

(vi) Automobile medical payment insurance;

(vii) Credit-only insurance (for example, mortgage insurance); and

(viii) Coverage for on-site medical clinics.

(3) *Limited excepted benefits*—(i) *In general*. Limited-scope dental benefits, limited-scope vision benefits, or long-term care benefits are excepted if they are provided under a separate policy, certificate, or contract of insurance, or are otherwise not an integral part of a group health plan as described in paragraph (c)(3)(ii) of this section. In addition, benefits provided under a health flexible spending arrangement are excepted benefits if they satisfy the requirements of paragraph (c)(3)(v) of this section.

(ii) *Not an integral part of a group health plan*. For purposes of this paragraph (c)(3), benefits are not an integral part of a group health plan (whether the benefits are provided through the same plan or a separate plan) only if the following two requirements are satisfied—

(A) Participants must have the right to elect not to receive coverage for the benefits; and

(B) If a participant elects to receive coverage for the benefits, the participant must pay an additional premium or contribution for that coverage.

(iii) *Limited scope*—(A) *Dental benefits*. Limited scope dental benefits are benefits substantially all of which are for treatment of the mouth (including any organ or structure within the mouth).

(B) *Vision benefits*. Limited scope vision benefits are benefits substantially all of which are for treatment of the eye.

(iv) *Long-term care*. Long-term care benefits are benefits that are either—

(A) Subject to State long-term care insurance laws;

(B) For qualified long-term care services, as defined in section 7702B(c)(1) of the Internal Revenue Code, or provided under a qualified long-term care insurance contract, as defined in section 7702B(b) of the Internal Revenue Code; or

(C) Based on cognitive impairment or a loss of functional capacity that is expected to be chronic.

(v) *Health flexible spending arrangements*. Benefits provided under a health flexible spending arrangement (as defined in section 106(c)(2) of the Internal Revenue Code) are excepted for a class of participants only if they satisfy the following two requirements—

(A) Other group health plan coverage, not limited to excepted benefits, is made available for the year to the class of participants by reason of their employment; and

(B) The arrangement is structured so that the maximum benefit payable to any participant in the class for a year cannot exceed two times the participant's salary reduction election under the arrangement for the year (or, if greater, cannot exceed $500 plus the amount of the participant's salary reduction election). For this purpose, any amount that an employee can elect to receive as taxable income but elects to apply to the health flexible spending arrangement is considered a salary reduction election (regardless of whether the amount is characterized as salary or as a credit under the arrangement).

(4) *Noncoordinated benefits*—(i) *Excepted benefits that are not coordinated*. Coverage for only a specified disease or illness (for example, cancer-only policies) or hospital indemnity or other fixed indemnity insurance is excepted only if it meets each of the conditions specified in paragraph (c)(4)(ii) of this section. To be hospital indemnity or other fixed indemnity insurance, the insurance must pay a fixed dollar amount per day (or per other period) of hospitalization or illness (for example, $100/day) regardless of the amount of expenses incurred.

(ii) *Conditions*. Benefits are described in paragraph (c)(4)(i) of this section only if—

(A) The benefits are provided under a separate policy, certificate, or contract of insurance;

(B) There is no coordination between the provision of the benefits and an exclusion of benefits under any group health plan maintained by the same plan sponsor; and

(C) The benefits are paid with respect to an event without regard to whether benefits are provided with respect to the event under any group health plan maintained by the same plan sponsor.

(iii) *Example*. The rules of this paragraph (c)(4) are illustrated by the following example:

Example. (i) *Facts*. An employer sponsors a group health plan that provides coverage through an insurance policy. The policy provides benefits only for hospital stays at a fixed percentage of hospital expenses up to a maximum of $100 a day.

(ii) *Conclusion*. In this *Example*, even though the benefits under the policy satisfy the conditions in paragraph (c)(4)(ii) of this section, because the policy pays a percentage of expenses incurred rather than a fixed dollar amount, the benefits under the policy are not excepted benefits under this paragraph (c)(4). This is the result even if, in practice, the policy pays the maximum of $100 for every day of hospitalization.

(5) *Supplemental benefits*. (i) The following benefits are excepted only if they are provided under a separate policy, certificate, or contract of insurance—

(A) Medicare supplemental health insurance (as defined under section 1882(g)(1) of the Social Security Act; also known as Medigap or MedSupp insurance);

(B) Coverage supplemental to the coverage provided under Chapter 55, Title 10 of the United States Code (also known as TRICARE supplemental programs); and

(C) Similar supplemental coverage provided to coverage under a group health plan. To be similar supplemental coverage, the coverage must be specifically designed to fill gaps in primary coverage, such as coinsurance or deductibles. Similar supplemental coverage does not include coverage that becomes secondary or supplemental only under a coordination-of-benefits provision.

(ii) The rules of this paragraph (c)(5) are illustrated by the following example:

Example. (i) *Facts*. An employer sponsors a group health plan that provides coverage for both active employees and retirees. The coverage for retirees supplements benefits provided by Medicare, but does not meet the requirements for a supplemental policy under section 1882(g)(1) of the Social Security Act.

(ii) *Conclusion*. In this *Example*, the coverage provided to retirees does not meet the definition of supplemental excepted benefits under this paragraph (c)(5) because the coverage is not Medicare supplemental insurance as defined under section 1882(g)(1) of the Social Security Act, is not a TRICARE supplemental program, and is not supplemental to coverage provided under a group health plan.

(d) *Treatment of partnerships*. For purposes of this part:

(1) *Treatment as a group health plan*. Any plan, fund, or program that would not be (but for this paragraph (d)) an employee welfare benefit plan and that is established or maintained by a partnership, to the extent that the plan, fund, or program provides medical care (including items and services paid for as medical care) to present or former partners in the partnership or to their dependents (as defined under the terms of the plan, fund, or program), directly or through insurance, reimbursement, or otherwise, is treated (subject to paragraph (d)(2)) as an employee welfare benefit plan that is a group health plan.

(2) *Employment relationship*. In the case of a group health plan, the term *employer* also includes the partnership in relation to any bona fide partner. In addition, the term *employee* also includes any bona fide partner. Whether or not an individual is a bona fide partner is determined based on all the relevant facts and circumstances, including whether the individual performs services on behalf of the partnership.

(3) *Participants of group health plans*. In the case of a group health plan, the term participant also includes any individual described in paragraph (d)(3)(i) or (ii) of this section if the individual is, or may become, eligible to receive a benefit under the plan or the individual's beneficiaries may be eligible to receive any such benefit.

(i) In connection with a group health plan maintained by a partnership, the individual is a partner in relation to the partnership.

(ii) In connection with a group health plan maintained by a self-employed individual (under which one or more employees are participants), the individual is the self-employed individual.

(e) *Determining the average number of employees*. [Reserved]

[69 FR 78778, Dec. 30, 2004, as amended at 74 FR 51687, Oct. 7, 2009; 79 FR 10312, Feb. 24, 2014]

§ 2590.734 Enforcement. [Reserved]

§ 2590.736 Applicability dates.

Sections 2590.701–1 through 2590.701–8 and 2590.731 through 2590.736 are applicable for plan years beginning on or after July 1, 2005. Until the applicability date for this regulation, plans and issuers are required to continue to comply with the corresponding sections of 29 CFR part 2590, contained in the 29 CFR, parts 1927 to end, edition revised as of July 1, 2004.

[69 FR 78778, Dec. 30, 2004]

PARTS 2591–2599 [RESERVED]

CHAPTER XXVII—FEDERAL MINE SAFETY AND HEALTH REVIEW COMMISSION

Part		*Page*
2700	Procedural rules	917
2701	Government in the Sunshine Act regulations	944
2702	Regulations implementing the Freedom of Information Act	946
2703	Employee responsibilities and conduct	951
2704	Implementation of the Equal Access to Justice Act in Commission proceedings	951
2705	Privacy Act implementation	959
2706	Enforcement of nondiscrimination on the basis of handicap in programs or activities conducted by the Federal Mine Safety and Health Review Commission	961
2707–2799	[Reserved]	

PART 2700—PROCEDURAL RULES

Subpart A—General Provisions

Sec.
2700.1 Scope; applicability of other rules; construction.
2700.2 Definitions.
2700.3 Who may practice.
2700.4 Parties, intervenors, and amici curiae.
2700.5 General requirements for pleadings and other documents; status or informational requests.
2700.6 Signing of documents.
2700.7 Service.
2700.8 Computation of time.
2700.9 Extensions of time.
2700.10 Motions.
2700.11 Withdrawal of pleading.
2700.12 Consolidation of proceedings.

Subpart B—Contests of Citations and Orders

2700.20 Notice of contest of a citation or order issued under section 104 of the Act.
2700.21 Effect of filing notice of contest of citation or order.
2700.22 Notice of contest of imminent danger withdrawal orders under section 107 of the Act.
2700.23 Review of a subsequent citation or order.
2700.24 Emergency response plan dispute proceedings.

Subpart C—Contests of Proposed Penalties

2700.25 Proposed penalty assessment.
2700.26 Notice of contest of proposed penalty assessment.
2700.27 Effect of failure to contest proposed penalty assessment.
2700.28 Filing of petition for assessment of penalty with the Commission.
2700.29 Answer.
2700.30 Assessment of penalty.
2700.31 Penalty settlement.

Subpart D—Complaints for Compensation

2700.35 Time to file.
2700.36 Contents of complaint.
2700.37 Answer.

Subpart E—Complaints of Discharge, Discrimination or Interference

2700.40 Who may file.
2700.41 Time to file.
2700.42 Contents of complaint.
2700.43 Answer.
2700.44 Petition for assessment of penalty in discrimination cases.
2700.45 Temporary reinstatement proceedings.

Subpart F—Applications for Temporary Relief

2700.46 Procedure.
2700.47 Contents of application.

Subpart G—Hearings

2700.50 Assignment of Judges.
2700.51 Hearing dates and sites.
2700.52 Expedition of proceedings.
2700.53 Prehearing conferences and statements.
2700.54 Notice of hearing.
2700.55 Powers of Judges.
2700.56 Discovery; general.
2700.57 Depositions.
2700.58 Interrogatories, requests for admissions and requests for production of documents.
2700.59 Failure to cooperate in discovery; sanctions.
2700.60 Subpoenas.
2700.61 Name of miner informant.
2700.62 Name of miner witness.
2700.63 Evidence; presentation of case.
2700.64 Retention of exhibits.
2700.65 Proposed findings, conclusions and orders.
2700.66 Summary disposition of proceedings.
2700.67 Summary decision of the Judge.
2700.68 Substitution of the Judge.
2700.69 Decision of the Judge.

Subpart H—Review by the Commission

2700.70 Petitions for discretionary review.
2700.71 Review by the Commission on its own motion.
2700.72 [Reserved]
2700.73 Procedure for intervention.
2700.74 Procedure for participation as amicus curiae.
2700.75 Briefs.
2700.76 Interlocutory review.
2700.77 Oral argument.
2700.78 Reconsideration.
2700.79 Correction of clerical errors.

Subpart I—Miscellaneous

2700.80 Standards of conduct; disciplinary proceedings.
2700.81 Recusal and disqualification.
2700.82 Ex parte communications.
2700.83 Authority to sign orders.

Subpart J—Simplified Proceedings

2700.100 Purpose.
2700.101 Eligibility for simplified proceedings.
2700.102 Commission commencement of simplified proceedings.
2700.103 Party request for simplified proceedings.
2700.104 Discontinuance of simplified proceedings.

2700.105 Disclosure of information by the Parties.
2700.106 Pre-Hearing conference.
2700.107 Discovery.
2700.108 Hearing.
2700.109 Review of Judge's Decision.
2700.110 Application.

AUTHORITY: 30 U.S.C. 815, 820, 823, and 876.

SOURCE: 58 FR 12164, Mar. 3, 1993, unless otherwise noted.

Subpart A—General Provisions

§ 2700.1 Scope; applicability of other rules; construction.

(a) *Scope.* (1) This part sets forth rules applicable to proceedings before the Federal Mine Safety and Health Review Commission (''the Commission'') and its Administrative Law Judges. The Commission is an adjudicative agency that provides administrative trial and appellate review of legal disputes arising under the Federal Mine Safety and Health Act of 1977, 30 U.S.C. 801 *et seq.* (''the Act''). The Commission is an independent agency, not a part of nor affiliated in any way with the U.S. Department of Labor or its Mine Safety and Health Administration (''MSHA''). The location of the Commission's headquarters is at 1331 Pennsylvania Avenue NW., Suite 520N, Washington, DC 20004–1710; its primary phone number is 202–434–9900; and the fax number of its Docket Office is 202–434–9954. The Commission maintains a Web site at *http://www.fmshrc.gov* where these rules, recent and many past decisions of the Commission and its Judges, and other information regarding the Commission, can be accessed.

(2) Unless the Commission provides otherwise, amendments to these rules are effective 60 days following publication in the FEDERAL REGISTER, and apply to cases initiated after they take effect. They also apply to further proceedings in cases pending on the effective date, except to the extent that application of the amended rules would not be feasible, or would work injustice, in which event the former rules of procedure would continue to apply.

(b) *Applicability of other rules.* On any procedural question not regulated by the Act, these Procedural Rules, or the Administrative Procedure Act (particularly 5 U.S.C. 554 and 556), the Commission and its Judges shall be guided so far as practicable by the Federal Rules of Civil Procedure and the Federal Rules of Appellate Procedure.

(c) *Construction.* These rules shall be construed to secure the just, speedy and inexpensive determination of all proceedings, and to encourage the participation of miners and their representatives. Wherever the masculine gender is used in these rules, the feminine gender is also implied.

[58 FR 12164, Mar. 3, 1993, as amended at 71 FR 44206, Aug. 4, 2006; 77 FR 48430, Aug. 14, 2012]

§ 2700.2 Definitions.

For purposes of this part, the definitions contained in section 3 of the Act, 30 U.S.C. 802, apply.

§ 2700.3 Who may practice.

(a) *Attorneys.* Attorneys admitted to practice before the highest court of any State, Territory, District, Commonwealth or possession of the United States are permitted to practice before the Commission.

(b) *Other persons.* A person who is not authorized to practice before the Commission as an attorney under paragraph (a) of this section may practice before the Commission as a representative of a party if he is:

(1) A party;

(2) A representative of miners;

(3) An owner, partner, officer or employee of a party when the party is a labor organization, an association, a partnership, a corporation, other business entity, or a political subdivision; or

(4) Any other person with the permission of the presiding judge or the Commission.

(c) *Entry of appearance.* A representative of a party shall enter an appearance in a proceeding under the Act or these procedural rules by signing the first document filed on behalf of the party with the Commission or Judge in accordance with § 2700.6; filing a written entry of appearance with the Commission or Judge; or, if the Commission or Judge permits, by orally entering an appearance in open hearing.

(d) *Withdrawal of appearance.* Any representative of a party desiring to

withdraw his appearance shall file a motion with the Commission or Judge. The motion to withdraw may, in the discretion of the Commission or Judge, be denied where it is necessary to avoid undue delay or prejudice to the rights of a party.

[58 FR 12164, Mar. 3, 1993, as amended at 64 FR 48712, Sept. 8, 1999; 78 FR 77356, Dec. 23, 2013]

§ 2700.4 Parties, intervenors, and amici curiae.

(a) *Party status.* A person, including the Secretary or an operator, who is named as a party or who is permitted to intervene, is a party. In a proceeding instituted by the Secretary under section 105(c)(2) of the Act, 30 U.S.C. 815(c)(2), the complainant on whose behalf the Secretary has filed the complaint is a party and may present additional evidence on his own behalf. A miner, applicant for employment, or representative of a miner who has filed a complaint with the Commission under section 105(c)(3) or 111 of the Act, 30 U.S.C. 815(c)(3) and 821, and an affected miner or his representative who has become a party in accordance with paragraph (b) of this section, are parties.

(b) *Intervention*—(1) *Intervention by affected miners and their representatives.* Before a case has been assigned to a Judge, affected miners or their representatives shall be permitted to intervene upon filing a written notice of intervention with the Executive Director, Federal Mine Safety and Health Review Commission, 1331 Pennsylvania Avenue NW., Suite 520N, Washington, DC 20004–1710. If the case has been assigned to a Judge, the notice of intervention shall be filed with the Judge. The Commission or the Judge shall mail forthwith a copy of the notice to all parties. After the start of the hearing, affected miners or their representatives may intervene upon just terms and for good cause shown.

(2) *Intervention by other persons.* (i) Motions by other persons for leave to intervene shall be filed before the start of a hearing on the merits unless the Judge, for good cause shown, allows a later filing. The motion shall set forth:

(A) The interest of the movant relating to the property or events that are the subject of the proceeding;

(B) The reasons why such interest is not otherwise adequately represented by the parties already involved in the proceeding; and

(C) A showing that intervention will not unduly delay or prejudice the adjudication of the issues.

(ii) Such intervention is not a matter of right but of the sound discretion of the Judge. In denying a motion to intervene, the Judge may alternatively permit the movant to participate in the proceeding as amicus curiae.

(c) *Procedure for participation as amicus curiae.* Any person may move to participate as amicus curiae in a proceeding before a Judge. Such participation as amicus curiae shall not be a matter of right but of the sound discretion of the Judge. A motion for participation as amicus curiae shall set forth the interest of the movant and show that the granting of the motion will not unduly delay or prejudice the adjudication of the issues. If the Judge permits amicus curiae participation, the Judge's order shall specify the time within which such amicus curiae memorandum, brief, or other pleading must be filed and the time within which a reply may be made. The movant may conditionally attach its memorandum, brief, or other pleading to its motion for participation as amicus curiae.

[58 FR 12164, Mar. 3, 1993, as amended at 67 FR 60862, Sept. 27, 2002; 77 FR 48430, Aug. 14, 2012]

§ 2700.5 General requirements for pleadings and other documents; status or informational requests.

(a) *Jurisdiction.* A proposal for a penalty under section 110, 30 U.S.C. 820(c); an answer to a notice of contest of a citation or withdrawal order issued under section 104, 30 U.S.C. 814; an answer to a notice of contest of an order issued under section 107, 30 U.S.C. 817; a complaint issued under section 105(c) or 111, 30 U.S.C. 815(c) and 821; and an application for temporary reinstatement under section 105(c)(2), 30 U.S.C. 815(c)(2), shall allege that the violation or imminent danger took place in or involves a mine that has products

which enter commerce or has operations or products that affect commerce. Jurisdictional facts that are alleged are deemed admitted unless specifically denied in a responsive pleading.

(b) How to file. Unless otherwise provided for in the Act, these rules, or by order, filing may be accomplished in person, by U.S. Postal Service, by third-party commercial carrier, by facsimile transmission, or by electronic transmission. Instructions for electronic filing may be accessed on the Commission's Web site (*http://www.fmshrc.gov*).

(c) *Where to file.* Unless otherwise provided for in the Act, these rules, or by order:

(1) *Filing by electronic transmission.* A document may be filed by electronic transmission with the Commission and its Judges. Instructions for electronic filing may be accessed on the Commission's Web site (*http://www.fmshrc.gov*).

(2) Filing in person, by U.S. Postal Service, by third-party commercial carrier, or by facsimile transmission—(i) Before a Judge has been assigned. Before a Judge has been assigned to a case, all documents shall be filed with the Commission. Documents filed with the Commission shall be addressed to the Executive Director and mailed or delivered to the Docket Office, Federal Mine Safety and Health Review Commission, 1331 Pennsylvania Avenue NW., Suite 520N, Washington, DC 20004–1710; facsimile delivery shall be transmitted to (202) 434–9954.

(ii) *After a Judge has been assigned.* After a Judge has been assigned, and before a decision has been issued, documents shall be filed with the Judge at the address set forth on the notice of the assignment.

(iii) *Interlocutory review.* Documents filed in connection with interlocutory review shall be filed with the Commission in accordance with § 2700.76.

(iv) *After a Judge has issued a final decision.* After the Judge has issued a final decision, documents shall be filed with the Commission as described in paragraph (c)(2)(i) of this section.

(d) *Necessary information.* All documents shall be legible and shall clearly identify on the cover page the filing party by name. All documents shall be dated and shall include the assigned docket number, page numbers, and the filing person's address, business telephone number, cell telephone number if available, fax number if available, and email address if available. Written notice of any change in contact information shall be given promptly to the Commission or the Judge and all other parties.

(e) *Privacy considerations.* Persons submitting information to the Commission shall protect information that tends to identify certain individuals or tends to constitute an unwarranted intrusion of personal privacy in the following manner:

(1) All but the last four digits of social security numbers, financial account numbers, driver's license numbers, or other personal identifying numbers, shall be redacted or excluded;

(2) Minor children shall be identified only by initials;

(3) If dates of birth must be included, only the year shall be used;

(4) Parties shall exercise caution when filing medical records, medical treatment records, medical diagnosis records, employment history, and individual financial information, and shall redact or exclude certain materials unnecessary to a disposition of the case.

(f) *Effective date of filing.* Unless otherwise provided for in the Act, these rules, or by order:

(1) *Filing by electronic transmission.* When filing is by electronic transmission, filing is effective upon successful receipt by the Commission. The electronic transmission shall be in the manner specified by the Commission's Web site (*http://www.fmshrc.gov*).

(2) *Filing in person, by U.S. Postal Service, by third-party commercial carrier, or by facsimile transmission.* When filing is by U.S. Postal Service, filing is effective upon mailing, except that the filing of a motion for extension of time, any document in an emergency response plan dispute proceeding, a petition for review of a temporary reinstatement order, a motion for summary decision, a petition for discretionary review, and a motion to exceed page limit is effective only upon receipt. See §§ 2700.9(a), 2700.24(d), 2700.45(f), 2700.67(a), 2700.70(a), (f), and 2700.75(f). When filing is in person, by

third-party commercial carrier, or by facsimile, filing is effective upon successful receipt by the Commission.

(g) *Number of copies.* Unless otherwise ordered or stated in this part, only the original of a document shall be filed.

(h) *Form of pleadings.* All documents, including those filed electronically, shall appear in at least 12-point type on paper 8½ by 11 inches in size, with margins of at least 1 inch on all four sides. Text and footnotes shall appear in the same size type. Text shall be double spaced. Headings and footnotes may be single spaced. Quotations of 50 words or more may be single spaced and indented left and right. Excessive footnotes are prohibited. The failure to comply with the requirements of this paragraph or the use of compacted or otherwise compressed printing features may be grounds for rejection of a pleading.

(i) *Citation to a decision of a Judge.* Each citation to a decision of a Judge should include ''(ALJ)'' at the end of the citation.

(j) *Status or informational requests.* Information concerning filing requirements, the status of cases, or docket information may be accessed through the Commission's Web site (*http://www.fmshrc.gov*). In the event such information is unavailable through the Commission's Web site or the requesting party does not have access to the Web site, such status or informational requests must be directed to the Docket Office of the Federal Mine Safety and Health Review Commission, 1331 Pennsylvania Avenue NW., Suite 520N, Washington, DC 20004–1710.

[78 FR 77356, Dec. 23, 2013]

§ 2700.6 Signing of documents.

(a) *Signature*—(1) *Documents not filed by electronic transmission.* A party or representative of the party shall sign a document by handwriting his signature.

(2) *Documents filed by electronic transmission.*

(i) A party or representative of the party may sign a document by including the notation ''/s/'' followed by the typewritten name of the party or representative of the party filing the document.

(ii) A party or representative of the party may sign a document by including a graphical duplicate of his handwritten signature.

(b) *Meaning of Signature.* A document or signature may not be denied legal effect or enforceability solely because it is in electronic form. When a party or representative of the party signs a document in the manner described in paragraph (a) of this section, that person's signature shall constitute his certificate:

(1) That under the provisions of the law, including these rules and all federal conflict of interest statutes, he is authorized and qualified to represent the particular party in the matter; and

(2) That he has read the document; that to the best of his knowledge, information, and belief formed after reasonable inquiry it is well grounded in fact and is warranted by existing law or a good faith argument for extension, modification, or reversal of existing law; and that it is not interposed for any improper purpose, such as to harass or to cause unnecessary delay or needless increase in the cost of litigation.

[78 FR 77357, Dec. 23, 2013]

§ 2700.7 Service.

(a) *Generally.* A copy of each document filed with the Commission shall be served on all parties. Whenever a party is represented by an attorney or other authorized representative who has entered an appearance on behalf of such party pursuant to § 2700.3, service thereafter shall be made upon the attorney or other authorized representative. In addition, a copy of a notice of contest of a citation or order, a petition for assessment of penalty, a discrimination complaint, a complaint for compensation, and an application for temporary relief shall be served upon the representative of miners, if known.

(b) *Posting.* A copy of an order, citation, notice, or decision required under section 109 of the Act, 30 U.S.C. 819, to be posted on a mine bulletin board shall, upon receipt, be immediately posted on such bulletin board by the operator.

(c) *Manner of service.* Unless otherwise provided for in the Act, these rules, or by order:

(1) *Methods of service.* Documents may be served in person, by U.S. Postal Service, by third-party commercial carrier, by facsimile transmission, or by electronic transmission (email). For documents filed pursuant to §§ 2700.9(a), 2700.24, 2700.45, 2700.70(f), 2700.75(f), and subpart F (applications for temporary relief), the method of service used must be no less expeditious than that used for filing, except that if service by electronic transmission (email) is impossible, the filing party must serve in person, by third party commercial carrier, or facsimile transmission, resulting in same-day delivery.

(2) *Effective date of service.* When service is by U.S. Postal service, service is effective upon mailing. When service is in person, by third-party commercial carrier, by facsimile transmission, or by electronic transmission (email), service is effective upon successful receipt by the party intended to be served.

(d) *Proof of service.* All pleadings and other filed documents shall be accompanied by a certification setting forth the date, method of service, and all contact information used.

[78 FR 77357, Dec. 23, 2013]

§ 2700.8 Computation of time.

Unless otherwise provided for in the Act, these rules, or by order, the due date for a pleading or other deadline for party or Commission action (hereinafter ''due date'') is determined sequentially as follows:

(a) Except to the extent otherwise provided herein (see, e.g., §§ 2700.24 and 2700.45), when the period of time prescribed for action is less than 11 days, Saturdays, Sundays, and federal holidays shall be excluded in determining the due date.

(b) When a party serves a pleading by a method of delivery resulting in other than same-day service, the due date for party action in response is extended 5 additional calendar days beyond the date otherwise prescribed, after consideration of paragraph (a) of this section where applicable.

(c) The day from which the designated period begins to run shall not be included in determining the due date. The last day of the prescribed period for action, after consideration of paragraphs (a) and (b) of this section where applicable, shall be included and be the due date, unless it is a Saturday, Sunday, federal holiday, or other day on which the Commission's offices are not open or the Commission is open but unable to accept filings, in which event the due date shall be the next day which is not one of the aforementioned days.

(d) The time of filing with the Commission shall be determined using Washington, DC, local time. For filing by electronic means and by facsimile transmission, the due date ends at midnight Washington, DC, local time. For filing by other means, the due date ends at 5:00 p.m. Washington, DC, local time.

Example 1: A motion is filed with the Commission on Monday, July 1, 2013. Under § 2700.10(d), other parties in the proceeding have 8 days in which to respond to the motion. Because the response period is less than 11 days, intervening weekends and holidays, such as Thursday, July 4, 2013, are excluded in determining the due date. A response is thus due by Friday, July 12, 2013. In addition, those parties not served with the motion on the day it was filed have 5 additional calendar days in which to respond, or until Wednesday, July 17, 2013.

Example 2: A Commission Judge issues his final decision in a case on Friday, July 5, 2013. Under § 2700.70(a), parties have until August 4, 2013, to file with the Commission a petition for discretionary review of the Judge's decision. Even though the decision was mailed, 5 additional calendar days are not added, because paragraph (b) of this section only applies to actions in response to parties' pleadings. However, because August 4, 2013, is a Sunday, the actual due date for the petition is Monday, August 5, 2013.

Example 3: Pursuant to § 2700.24(a), the Secretary of Labor files a referral of a citation arising out of a dispute over the content of an operator's emergency response plan. Certain subsequent deadlines in such cases are specifically established by reference to calendar days, and thus paragraph (a) of this section would not necessarily apply in determining due dates. For instance, if the referral was filed on

Thursday, July 11, 2013, the short and plain statement the operator must file in response within 5 calendar days would be due Tuesday, July 16, 2013, because the intervening weekend days would not be excluded in determining the due date. If the fifth calendar day were to fall on a weekend, holiday, or other day on which the Commission is not open however, the terms of paragraph (c) would apply and the due date would be the next day the Commission is open.

[78 FR 77358, Dec. 23, 2013]

§ 2700.9 Extensions of time.

(a) The time for filing or serving any document may be extended for good cause shown. Filing of a motion requesting an extension of time is effective upon receipt. A motion requesting an extension of time shall be received no later than 3 days prior to the expiration of the time allowed for the filing or serving of the document, and shall comply with § 2700.10. The motion and any statement in opposition shall include proof of service on all parties by a means of delivery no less expeditious than that used for filing the motion, except that if service by electronic transmission (email) is impossible, the filing party must serve in person, by third party commercial carrier, or by facsimile transmission, resulting in same-day delivery.

(b) In exigent circumstances, an extension of time may be granted even though the request was filed after the designated time for filing has expired. In such circumstances, the party requesting the extension must show, in writing, the reasons for the party's failure to make the request before the time prescribed for the filing had expired.

(c) This rule does not apply to petitions for discretionary review filed pursuant to section 113(d)(2)(A)(i) of the Act, 30 U.S.C. 823(d)(2)(A)(i), and § 2700.70(a).

[64 FR 48713, Sept. 8, 1999, as amended at 71 FR 44207, Aug. 4, 2006; 78 FR 77358, Dec. 23, 2013]

§ 2700.10 Motions.

(a) An application for an order shall be by motion which, unless made during a hearing or a conference, shall be made in writing and shall set forth the relief or order sought.

(b) Written motions shall be set forth in a document separate from other pleadings.

(c) Prior to filing any motion other than a dispositive motion, the moving party shall confer or make reasonable efforts to confer with the other parties and shall state in the motion if any other party opposes or does not oppose the motion.

(d) A statement in opposition to a written motion may be filed by any party within 8 days after service upon the party. Unless otherwise ordered, oral argument on motions will not be heard. Where circumstances warrant, a motion may be ruled upon prior to the expiration of the time for response; a party adversely affected by the ruling may seek reconsideration.

[58 FR 12164, Mar. 3, 1993, as amended at 64 FR 48713, Sept. 8, 1999; 71 FR 44207, Aug. 4, 2006]

§ 2700.11 Withdrawal of pleading.

A party may withdraw a pleading at any stage of a proceeding with the approval of the Judge or the Commission.

§ 2700.12 Consolidation of proceedings.

The Commission and its Judges may at any time, upon their own motion or a party's motion, order the consolidation of proceedings that involve similar issues.

Subpart B—Contests of Citations and Orders

§ 2700.20 Notice of contest of a citation or order issued under section 104 of the Act.

(a) *Who may contest.* (1) An operator may contest:

(i) A citation or an order issued under section 104 of the Act, 30 U.S.C. 814;

(ii) A modification of a citation or an order issued under section 104 of the Act; and

(iii) The reasonableness of the length of time fixed for abatement in a citation or modification thereof issued under section 104 of the Act.

(2) A miner or representative of miners may contest:

(i) The issuance, modification or termination of any order issued under section 104 of the Act; and

(ii) The reasonableness of the length of time fixed for abatement in a citation or modification thereof issued under section 104 of the Act.

(b) *Time to contest.* Contests filed by an operator pursuant to paragraph (a)(1) of this section shall be filed with the Secretary at the appropriate Regional Solicitor's Office or at the Solicitor's Office, Mine Safety and Health Division, Arlington, Virginia, within 30 days of receipt by the operator of the contested citation, order, or modification. Contests filed by a miner or representative of miners pursuant to paragraph (a)(2) of this section shall be filed in the same manner within 30 days of receipt by the miner or representative of miners of the contested order, modification, or termination.

(c) *Notification by the Secretary.* The Secretary, in accordance with section 105(d) of the Act, 30 U.S.C. 815(d), shall immediately advise the Commission of such notice of contest upon its receipt.

(d) *Copy to Commission.* The contesting party shall also file a copy of his notice of contest with the Commission at the time he files with the Secretary.

(e) *Contents of notice of contest.* (1) A notice of contest shall contain a short and plain statement of:

(i) The party's position with respect to each issue of law and fact that the party contends is pertinent; and

(ii) The relief requested by the party.

(2) A legible copy of the contested citation or order shall be attached to the notice of contest. If a legible copy is not available, the notice of contest shall set forth the text of the contested citation or order.

(f) *Answer.* Within 20 days after service of a notice of contest, the Secretary shall file an answer responding to each allegation of the notice of contest.

§ 2700.21 Effect of filing notice of contest of citation or order.

(a) The filing of a notice of contest of a citation or order issued under section 104 of the Act, 30 U.S.C. 814, does not constitute a challenge to a proposed penalty assessment that may subsequently be issued by the Secretary under section 105(a) of the Act, 30 U.S.C. 815(a), which is based on that citation or order. A challenge to such a proposed penalty assessment must be filed as a separate notice of contest of the proposed penalty assessment. *See* § 2700.26.

(b) An operator's failure to file a notice of contest of a citation or order issued under section 104 of the Act, 30 U.S.C. 814, shall not preclude the operator from challenging, in a penalty proceeding, the fact of violation or any special findings contained in a citation or order including the assertion in the citation or order that the violation was of a significant and substantial nature or was caused by the operator's unwarrantable failure to comply with the standard.

[58 FR 12164, Mar. 3, 1993, as amended at 71 FR 44207, Aug. 4, 2006]

§ 2700.22 Notice of contest of imminent danger withdrawal orders under section 107 of the Act.

(a) *Time to file.* A notice of contest of a withdrawal order issued under section 107 of the Act, 30 U.S.C. 817, or any modification or termination of the order, shall be filed with the Commission by the contesting party within 30 days of receipt of the order or any modification or termination of the order.

(b) *Contents of notice of contest.* (1) A notice of contest shall contain a short and plain statement of:

(i) The contesting party's position on each issue of law and fact that the contesting party contends is pertinent; and

(ii) The relief requested by the contesting party.

(2) A legible copy of the contested order shall be attached to the notice of contest. If a legible copy is not available, the notice of contest shall set forth the text of the contested order.

(c) *Answer.* Within 15 days after service of the notice of contest, the Secretary shall file an answer responding to each allegation of the notice of contest.

§ 2700.23 Review of a subsequent citation or order.

(a) The contesting party shall file any subsequent citation or order that

modifies or terminates the citation or order under review within 30 days of its receipt. The notice of contest under section 105 or section 107 of the Act, 30 U.S.C. 815 and 817, unless withdrawn, shall be deemed to challenge any such subsequent citation or order.

(b) A person who is not a party in a pending proceeding for review of a citation or order may obtain review of a modification or termination of the citation or order by filing a notice of contest under section 105 or section 107 of the Act. The notice of contest shall be filed within 30 days of receipt of the citation or order that modifies or terminates the citation or order being reviewed.

§ 2700.24 Emergency response plan dispute proceedings.

(a) *Referral by the Secretary*. The Secretary shall immediately refer to the Commission any citation arising from a dispute between the Secretary and an operator with respect to the content of the operator's emergency response plan, or any refusal by the Secretary to approve such a plan. Any referral made pursuant to this paragraph shall be made within two business days of the issuance of any such citation.

(b) *Contents of referral*. A referral shall consist of a notice of plan dispute describing the nature of the dispute; a copy of the citation issued by the Secretary; a short and plain statement of the Secretary's position with respect to any disputed plan provision; and a copy of the disputed provision of the emergency response plan.

(c) *Short and plain statement by the operator*. Within five calendar days following the filing of the referral, the operator shall file with the Commission a short and plain statement of its position with respect to the disputed plan provision.

(d) *Filing and service of pleadings*. The filing with the Commission of any document in an emergency response plan dispute proceeding, including the referral, is effective upon receipt. A copy of each document filed with the Commission in such a proceeding shall be served on all parties and on any miner or miners' representative who has participated in the emergency response plan review process by a method of service no less expeditious than that used for filing, except that if service by electronic transmission (email) is impossible, the filing party must serve in person, by third party commercial carrier, or by facsimile transmission, resulting in same-day delivery.

(e) *Proceedings before the Judge*—(1) *Submission of materials*. Within 15 calendar days of the referral, the parties shall submit to the Judge assigned to the matter all relevant materials regarding the dispute. Such submissions shall include a request for any relief sought and may include proposed findings of fact and conclusions of law. Such materials may be supported by affidavits or other verified documents, and shall specify the grounds upon which the party seeks relief. Supporting affidavits shall be made on personal knowledge and shall show affirmatively that the affiant is competent to testify to the matters stated.

(2) *Hearing*. (i) Within 5 calendar days following the filing of the Secretary's referral, any party may request a hearing and shall so advise the Commission's Chief Administrative Law Judge or his designee, and simultaneously notify the other parties.

(ii) Within 10 calendar days following the filing of the Secretary's referral, the Commission's Chief Administrative Law Judge or his designee may issue an order scheduling a hearing on the Judge's own motion, and must immediately so notify the parties.

(iii) If a hearing is ordered under paragraphs (e)(2)(i) or (ii) of this section, the hearing shall be held within 15 calendar days of the filing of the referral. The scope of such a hearing is limited to the disputed plan provision or provisions. If no hearing is held, the Judge assigned to the matter shall review the materials submitted by the parties pursuant to paragraph (e)(1) of this subsection, and shall issue a decision pursuant to paragraph (f) of this section.

(f) *Disposition*—(1) *Decision of the Judge*. Within 15 calendar days following receipt by the Judge of all submissions and testimony made pursuant to paragraph (e) of this subsection, the Judge shall issue a decision that constitutes the Judge's final disposition of the proceedings. The decision shall be

in writing and shall include all findings of fact and conclusions of law, and the reasons or bases for them, on all the material issues of fact, law or discretion presented by the record, and an order. The parties shall be notified of the Judge's decision by the most expeditious means reasonably available. Service of the decision shall be by certified or registered mail, return receipt requested.

(2) *Stay of plan provision.* Notwithstanding § 2700.69(b), a Judge shall retain jurisdiction over a request for a stay in an emergency response plan dispute proceeding. Within two business days following service of the decision, the operator may file with the judge a request to stay the inclusion of the disputed provision in the plan during the pendency of an appeal to the Commission pursuant to paragraph (g) of this section. The Secretary shall respond to the operator's motion within two business days following service of the motion. The judge shall issue an order granting or denying the relief sought within two business days after the filing of the Secretary's response.

(g) *Review of decision.* Any party may seek review of a Judge's decision, including the Judge's order granting or denying a stay, by filing with the Commission a petition for discretionary review pursuant to § 2700.70. Neither an operator's request for a stay nor the issuance of an order addressing the stay request affects the time limits for filing a petition for discretionary review of a Judge's decision with the Commission under this subparagraph. The Commission shall act upon a petition on an expedited basis. If review is granted, the Commission shall issue a briefing order. Except as otherwise ordered or provided for herein, the provisions of § 2700.75 apply. The Commission will not grant motions for extension of time for filing briefs, except under extraordinary circumstances.

[72 FR 2191, Jan. 18, 2007, as amended at 78 FR 77358, Dec. 23, 2013]

Subpart C—Contests of Proposed Penalties

§ 2700.25 Proposed penalty assessment.

The Secretary, by certified mail, shall notify the operator or any other person against whom a penalty is proposed of the violation alleged, the amount of the proposed penalty assessment, and that such person shall have 30 days to notify the Secretary that he wishes to contest the proposed penalty assessment.

§ 2700.26 Notice of contest of proposed penalty assessment.

A person has 30 days after receipt of the proposed penalty assessment within which to notify the Secretary that he contests the proposed penalty assessment. A person who wishes to contest a proposed penalty assessment must provide such notification regardless of whether the person has previously contested the underlying citation or order pursuant to § 2700.20. The Secretary shall immediately transmit to the Commission any notice of contest of a proposed penalty assessment.

[71 FR 44207, Aug. 4, 2006]

§ 2700.27 Effect of failure to contest proposed penalty assessment.

If, within 30 days from the receipt of the Secretary's proposed penalty assessment, the operator or other person fails to notify the Secretary that he contests the proposed penalty, the Secretary's proposed penalty assessment shall be deemed to be a final order of the Commission not subject to review by any court or agency.

§ 2700.28 Filing of petition for assessment of penalty with the Commission.

(a) *Time to file.* Within 45 days of receipt of a timely contest of a proposed penalty assessment, the Secretary shall file with the Commission a petition for assessment of penalty.

(b) *Contents.* The petition for assessment of penalty shall:

(1) List the alleged violations and the proposed penalties. Each violation shall be identified by the number and date of the citation or order and the

section of the Act or regulations alleged to be violated.

(2) Include a short and plain statement of supporting reasons based on the criteria for penalty assessment set forth in section 110(i) of the Act, 30 U.S.C. 820(i), unless a single penalty assessment has been proposed under 30 CFR 100.4.

(3) State whether the citation or order has been contested pursuant to § 2700.20 and the docket number of any contest proceeding.

(4) Advise the party against whom the petition is filed that an answer to the petition must be filed within 30 days pursuant to § 2700.29 and that the answer must be filed regardless of whether the party has already filed a notice of contest of the citation, order, or proposed penalty assessment involved.

(c) *Attachments*. A legible copy of each citation or order for which a penalty is sought shall be attached to the petition for assessment of penalty. If a legible copy is not available, the petition for assessment of penalty shall set forth the text of the citation or order.

[58 FR 12164, Mar. 3, 1993, as amended at 71 FR 44207, Aug. 4, 2006]

§ 2700.29 Answer.

A party against whom a petition for assessment of penalty is filed shall file an answer within 30 days after service of the petition for assessment of penalty. An answer shall include a short and plain statement responding to each allegation of the petition.

§ 2700.30 Assessment of penalty.

(a) In assessing a penalty the Judge shall determine the amount of penalty in accordance with the six statutory criteria contained in section 110(i) of the Act, 30 U.S.C. 820(i), and incorporate such determination in a written decision. The decision shall contain findings of fact and conclusions of law on each of the statutory criteria and an order requiring that the penalty be paid.

(b) In determining the amount of penalty, neither the Judge nor the Commission shall be bound by a penalty proposed by the Secretary or by any offer of settlement made by a party.

§ 2700.31 Penalty settlement.

(a) *General*. A proposed penalty that has been contested before the Commission may be settled only with the approval of the Commission upon motion. In all penalty proceedings, except for discrimination proceedings arising under section 105(c) of the Mine Act, 30 U.S.C. 815(c), a settlement motion must be accompanied by a proposed order approving settlement. In discrimination proceedings, a party shall file a motion to approve settlement that includes the factual support described in paragraph (b)(1) of this section, and that shall be filed and served in accordance with the provisions of 29 CFR 2700.5 and 2700.7, respectively. In discrimination proceedings, a party need not file a proposed order.

(b) *Content of motion*.

(1) *Factual support*. A motion to approve a penalty settlement shall include for each violation the amount of the penalty proposed by the Secretary, the amount of the penalty agreed to in settlement, and facts in support of the penalty agreed to by the parties. Rather than setting forth such information in detail, the motion may incorporate by reference the information which has been included in the accompanying proposed order as required by paragraph (c)(1) of this section.

(2) *Certification*. The party filing a motion must certify that the opposing party has authorized the filing party to represent that the opposing party consents to the granting of the motion and the entry of the proposed order approving settlement.

(c) *Content of proposed order*.

(1) *Factual support*. A proposed order approving a penalty settlement shall include for each violation the amount of the penalty proposed by the Secretary, the amount of the penalty agreed to in settlement, and facts in support of the penalty agreed to by the parties. Forms for proposed orders approving settlement are available on the Commission's Web site (*http://www.fmshrc.gov*). Although parties are not required to use the forms on the Commission's Web site, if proposed orders fail to include pertinent information, the motion and proposed order may be rejected for filing by the Commission in accordance with paragraph

(f) of this section. Proposed orders shall not be submitted in PDF format.

(2) *Appearance by CLR.* If a motion has been filed by a Conference and Litigation Representative (''CLR'') on behalf of the Secretary, the proposed order approving settlement accompanying the motion shall include a provision in which the Judge accepts the CLR to represent the Secretary in accordance with the notice of either limited or unlimited appearance previously filed with the Commission. A CLR does not need to obtain authorization from the Commission to represent the Secretary before the CLR files a motion to approve settlement and proposed order.

(d) *Filing and service of motion accompanied by proposed order*—(1) *Electronic filing.* A motion and proposed order shall be filed electronically according to the requirements set forth in this rule and instructions on the Commission's Web site (*http://www.fmshrc.gov*). Filing is effective upon successful receipt by the Commission.

(i) *Signatures.* Any signature line set forth within a motion to approve settlement submitted electronically shall include the notation ''/s/'' followed by the typewritten name of the party or representative of the party filing the document, or by the graphical duplicate of the handwritten signature of the party or representative of the party filing the document. Such representation of the signature shall be deemed to be the original signature of the representative for all purposes unless the party representative shows that such representation of the signature was unauthorized. *See* 29 CFR 2700.6.

(ii) *Status of documents.* A motion and proposed order filed electronically constitute written documents for the purpose of applying the Commission's procedural rules (29 CFR part 2700), and such rules apply unless an exception to those rules is specifically set forth in this rule.

(2) *Filing by non-electronic means.* A party may file a motion to approve settlement and an accompanying proposed order by non-electronic means only with the permission of the Judge.

(3) *Service.* A settlement motion and proposed order shall be served on all parties or, if parties are represented, upon their representatives, by the most expeditious method possible and at least five business days before the motion and proposed order are filed with the Commission. If a party cannot be served by email, facsimile transmission, or commercial delivery, a copy of the motion and proposed order may be served by mail. A certificate of service shall accompany the motion and proposed order setting forth the date, method of service, and all contact information used.

(e) *Filing of motion and proposed order prior to filing of petition.* If a motion to approve settlement and proposed order is filed with the Commission before the Secretary has filed a petition for assessment of penalty, the filing party must also submit as attachments, electronic copies of the proposed penalty assessment and citations and orders at issue. If such attachments are filed, the Secretary need not file a petition for assessment of penalty.

(f) *Non-acceptance of motion and proposed order.* If a party filing a motion to approve settlement and a proposed order fails to include in the motion and proposed order pertinent information required by this rule and the Commission's instructions posted on the Commission's Web site, the Commission will not accept for filing the motion and proposed order. Rather, the Commission will inform the filing party of the need for correction and resubmission.

(g) *Final order.* Any order by the Judge approving a settlement shall set forth the reasons for approval and shall be supported by the record. Such order shall become the final order of the Commission 40 days after issuance unless the Commission has directed that the order be reviewed. A Judge may correct clerical errors in an order approving settlement in accordance with the provisions of 29 CFR 2700.69(c).

[75 FR 73957, Nov. 30, 2010, as amended at 78 FR 77358, Dec. 23, 2013]

Subpart D—Complaints for Compensation

§ 2700.35 Time to file.

A complaint for compensation under section 111 of the Act, 30 U.S.C. 821, shall be filed within 90 days after the beginning of the period during which the complainants are idled or would have been idled by the order that gives rise to the claim.

§ 2700.36 Contents of complaint.

A complaint for compensation shall include:

(a) A short and plain statement of the facts giving rise to the claim, including the period for which compensation is claimed;

(b) The total amount of the compensation claimed, if known; and

(c) A legible copy of any pertinent order of withdrawal or, if a legible copy is not available, the text of the order.

§ 2700.37 Answer.

Within 30 days after service of a complaint for compensation, the operator shall file an answer responding to each allegation of the complaint.

Subpart E—Complaints of Discharge, Discrimination or Interference

§ 2700.40 Who may file.

(a) *The Secretary*. A discrimination complaint under section 105(c)(2) of the Act, 30 U.S.C. 815(c)(2), shall be filed by the Secretary if, after an investigation conducted pursuant to section 105(c)(2), the Secretary determines that a violation of section 105(c)(1), 30 U.S.C. 815(c)(1), has occurred.

(b) *Miner, representative of miners, or applicant for employment*. A discrimination complaint under section 105(c)(3) of the Act, 30 U.S.C. 815(c)(3), may be filed by the complaining miner, representative of miners, or applicant for employment if the Secretary, after investigation, has determined that the provisions of section 105(c)(1) of the Act, 30 U.S.C. 815(c)(1), have not been violated.

§ 2700.41 Time to file.

(a) *The Secretary*. A discrimination complaint shall be filed by the Secretary within 30 days after his written determination that a violation has occurred.

(b) *Miner, representative of miners, or applicant for employment*. A discrimination complaint may be filed by a complaining miner, representative of miners, or applicant for employment within 30 days after receipt of a written determination by the Secretary that no violation has occurred.

§ 2700.42 Contents of complaint.

A discrimination complaint shall include a short and plain statement of the facts, setting forth the alleged discharge, discrimination or interference, and a statement of the relief requested.

§ 2700.43 Answer.

Within 30 days after service of a discrimination complaint, the respondent shall file an answer responding to each allegation of the complaint.

§ 2700.44 Petition for assessment of penalty in discrimination cases.

(a) *Petition for assessment of penalty in Secretary's complaint*. A discrimination complaint filed by the Secretary shall propose a civil penalty of a specific amount for the alleged violation of section 105(c) of the Act, 30 U.S.C. 815(c). The petition for assessment of penalty shall include a short and plain statement of supporting reasons based on the criteria for penalty assessment set forth in section 110(i) of the Act. 30 U.S.C. 820(i).

(b) *Petition for assessment of penalty after sustaining of complaint by miner, representative of miners, or applicant for employment*. Immediately upon issuance of a decision by a Judge sustaining a discrimination complaint brought pursuant to section 105(c)(3), 30 U.S.C. 815(c)(3), the Judge shall notify the Secretary in writing of such determination. The Secretary shall file with the Commission a petition for assessment of civil penalty within 45 days of receipt of such notice.

§ 2700.45 Temporary reinstatement proceedings.

(a) *Service of pleadings.* A copy of each document filed with the Commission in a temporary reinstatement proceeding shall be served on all parties by a method of service as expeditious as that used for filing, except that if service by electronic transmission (email) is impossible, the filing party must serve in person, by third party commercial carrier, or by facsimile transmission, resulting in same-day delivery.

(b) *Contents of application.* An application for temporary reinstatement shall state the Secretary's finding that the miner's discrimination complaint was not frivolously brought and shall be accompanied by an affidavit setting forth the Secretary's reasons supporting his finding. The application also shall include a copy of the miner's complaint to the Secretary, and proof of notice to and service on the person against whom relief is sought by the most expeditious method of notice and delivery reasonably available.

(c) *Request for hearing.* Within 10 calendar days following receipt of the Secretary's application for temporary reinstatement, the person against whom relief is sought shall advise the Commission's Chief Administrative Law Judge or his designee, and simultaneously notify the Secretary, whether a hearing on the application is requested. If no hearing is requested, the Judge assigned to the matter shall review immediately the Secretary's application and, if based on the contents thereof the Judge determines that the miner's complaint was not frivolously brought, he shall issue immediately a written order of temporary reinstatement. If a hearing on the application is requested, the hearing shall be held within 10 calendar days following receipt of the request for hearing by the Commission's Chief Administrative Law Judge or his designee, unless compelling reasons are shown in an accompanying request for an extension of time.

(d) *Hearing.* The scope of a hearing on an application for temporary reinstatement is limited to a determination as to whether the miner's complaint was frivolously brought. The burden of proof shall be upon the Secretary to establish that the complaint was not frivolously brought. In support of his application for temporary reinstatement, the Secretary may limit his presentation to the testimony of the complainant. The respondent shall have an opportunity to cross-examine any witnesses called by the Secretary and may present testimony and documentary evidence in support of its position that the complaint was frivolously brought.

(e) *Order on application.* (1) Within 7 calendar days following the close of a hearing on an application for temporary reinstatement, the Judge shall issue a written order granting or denying the application. However, in extraordinary circumstances, the Judge's time for issuing an order may be extended as deemed necessary by the Judge.

(2) The Judge's order shall include findings and conclusions supporting the determination as to whether the miner's complaint has been frivolously brought.

(3) The parties shall be notified of the Judge's determination by the most expeditious means reasonably available. Service of the order granting or denying the application shall be by certified or registered mail, return receipt requested.

(4) A Judge's order temporarily reinstating a miner is not a final decision within the meaning of § 2700.69, and except during appellate review of such order by the Commission or courts, the Judge shall retain jurisdiction over the temporary reinstatement proceeding.

(f) *Review of order.* Review by the Commission of a Judge's written order granting or denying an application for temporary reinstatement may be sought by filing with the Commission a petition, which shall be captioned ''Petition for Review of Temporary Reinstatement Order,'' with supporting arguments, within 5 business days following receipt of the Judge's written order. The filing of any such petition is effective upon receipt. The filing of a petition shall not stay the effect of the Judge's order unless the Commission so directs; a motion for such a stay will be granted only under extraordinary circumstances. Any response shall be

filed within 5 business days following service of a petition. Pleadings under this rule shall include proof of service on all parties by a means of delivery no less expeditious than that used for filing, except that if service by electronic transmission (email) is impossible, the filing party must serve in person, by third party commercial carrier, or by facsimile transmission, resulting in same-day delivery. The Commission's ruling on a petition shall be made on the basis of the petition and any response (any further briefs will be entertained only at the express direction of the Commission), and shall be rendered within 10 calendar days following receipt of any response or the expiration of the period for filing such response. In extraordinary circumstances, the Commission's time for decision may be extended.

(g) *Dissolution of order*. If, following an order of temporary reinstatement, the Secretary determines that the provisions of section 105(c)(1), 30 U.S.C. 815(c)(1), have not been violated, the Judge shall be so notified. An order dissolving the order of reinstatement shall not bar the filing of an action by the miner in his own behalf under section 105(c)(3) of the Act, 30 U.S.C. 815(c)(3), and § 2700.40(b) of these rules.

[58 FR 12164, Mar. 3, 1993, as amended at 64 FR 48713, Sept. 8, 1999; 71 FR 44208, Aug. 4, 2006; 78 FR 77359, Dec. 23, 2013]

Subpart F—Applications for Temporary Relief

§ 2700.46 Procedure.

(a) *When to file*. As provided in section 105(b)(2) of the Act, 30 U.S.C. 815(b)(2), an application for temporary relief from any modification or termination of any order or from any order issued under section 104 of the Act, 30 U.S.C. 814, may be filed at any time before such order becomes final. No temporary relief shall be granted with respect to a citation issued under section 104(a) or (f) of the Act. 30 U.S.C. 814(a) and (f).

(b) *Statements in opposition*. Any party opposing the application shall file a statement in opposition within 4 days after receipt of the application.

(c) *Prior hearing required*. Temporary relief shall not be granted prior to a hearing on such application.

(d) *Service of pleadings*. A copy of each document filed with the Commission under subpart F of this part must be served on all parties by a means of delivery no less expeditious than that used for filing, except that if service by electronic transmission (email) is impossible, the filing party must serve in person, by third party commercial carrier, or by facsimile transmission, resulting in same-day delivery.

[58 FR 12164, Mar. 3, 1993, as amended at 78 FR 77359, Dec. 23, 2013]

§ 2700.47 Contents of application.

(a) An application for temporary relief shall contain:

(1) A showing of substantial likelihood that the findings and decision of the Judge or the Commission will be favorable to the applicant;

(2) A statement of the specific relief requested; and

(3) A showing that such relief will not adversely affect the health and safety of miners in the affected mine.

(b) An application for temporary relief may be supported by affidavits or other evidence.

Subpart G—Hearings

§ 2700.50 Assignment of Judges.

Judges shall be assigned cases in rotation as far as practicable.

§ 2700.51 Hearing dates and sites.

All cases will be assigned a hearing date and site by order of the Judge. In fixing the time and place of the hearing, the Judge shall give due regard to the convenience and necessity of the parties or their representatives and witnesses, the availability of suitable hearing facilities, and other relevant factors.

[71 FR 44208, Aug. 4, 2006]

§ 2700.52 Expedition of proceedings.

(a) *Motions*. In addition to making a written motion pursuant to § 2700.10, a party may request expedition of proceedings by oral motion, with concurrent notice to all parties. Oral motions

shall be reduced to writing within 24 hours.

(b) *Timing of hearing*. Unless all parties consent to an earlier hearing, an expedited hearing on the merits of the case shall not be held on less than 4 days notice.

[58 FR 12164, Mar. 3, 1993, as amended at 71 FR 44208, Aug. 4, 2006]

§ 2700.53 Prehearing conferences and statements.

(a) The Judge may require the parties to participate in a prehearing conference, either in person or by telephone. The participants at any such conference may consider and take action with respect to:

(1) The formulation and simplification of the issues;

(2) The possibility of obtaining stipulations, admissions of fact and of documents that will avoid unnecessary proof and advance rulings from the Judge on the admissibility of evidence;

(3) The exchange of exhibits and the names of witnesses and a synopsis of the testimony expected from each witness;

(4) The necessity or desirability of amendments to the pleadings and the joinder of parties;

(5) The possibility of agreement disposing of any or all of the issues in dispute;

(6) Such other matters as may aid in the expedition of the hearing or the disposition of the case.

(b) The Judge may also require the parties to submit prehearing statements addressing one or more of the matters set forth in paragraph (a) of this section.

§ 2700.54 Notice of hearing.

Except in expedited proceedings, written notice of the time, place, and nature of the hearing, the legal authority under which the hearing is to be held, and the matters of fact and law asserted shall be given to all parties at least 20 days before the date set for hearing. The notice shall be mailed by certified or registered mail, return receipt requested.

§ 2700.55 Powers of Judges.

Subject to these rules, a Judge is empowered to:

(a) Administer oaths and affirmations;

(b) Issue subpoenas authorized by law;

(c) Rule on offers of proof and receive relevant evidence;

(d) Order depositions to be taken;

(e) Regulate the course of the hearing;

(f) Hold conferences for the settlement or simplification of the issues;

(g) Dispose of procedural requests or similar matters;

(h) Make decisions in the proceedings before him, provided that he shall not be assigned to make a recommended decision; and

(i) Take other action authorized by these rules, by 5 U.S.C. 556, or by the Act.

§ 2700.56 Discovery; general.

(a) *Discovery methods*. Parties may obtain discovery by one or more of the following methods: Depositions upon oral examination or written questions; written interrogatories; or requests for admissions, for production of documents or objects or for permission to enter upon property for inspecting, copying, photographing, and gathering information.

(b) *Scope of discovery*. Parties may obtain discovery of any relevant, nonprivileged matter that is admissible evidence or appears likely to lead to the discovery of admissible evidence.

(c) *Limitation of discovery*. Upon motion by a party or by the person from whom discovery is sought or upon his own motion, a Judge may, for good cause shown, limit discovery to prevent undue delay or to protect a party or person from oppression or undue burden or expense.

(d) *Initiation of discovery*. Discovery may be initiated after an answer to a notice of contest, an answer to a petition for assessment of penalty, or an answer to a complaint under section 105(c) or 111 of the Act has been filed. 30 U.S.C. 815(c) and 821.

(e) *Completion of discovery*. Discovery shall not unduly delay or otherwise impede disposition of the case, and must be completed at least 20 days prior to the scheduled hearing date. For good

cause shown, the Judge may extend or shorten the time for discovery.

[58 FR 12164, Mar. 3, 1993, as amended at 71 FR 44208, Aug. 4, 2006]

§ 2700.57 Depositions.

(a) *Generally*. Any party, without leave of the Judge, may take the testimony of any person, including a party, by deposition upon oral examination or written interrogatories.

(b) *Orders for deposition*. If the parties are unable to agree, the time, place, and manner of taking depositions shall be governed by order of the Judge.

§ 2700.58 Interrogatories, requests for admissions and requests for production of documents.

(a) *Interrogatories*. Any party, without leave of the Judge, may serve written interrogatories upon another party. A party served with interrogatories shall answer each interrogatory separately and fully in writing under oath within 25 days of service unless the proponent of the interrogatories agrees to a longer time. The Judge may order a shorter or longer time period for responding. A party objecting to an interrogatory shall state the basis for the objection in its answer.

(b) *Requests for admissions*. Any party, without leave of the Judge, may serve on another party a written request for admissions. A party served with a request for admissions shall respond to each request separately and fully in writing within 25 days of service, unless the party making the request agrees to a longer time. The Judge may order a shorter or longer time period for responding. A party objecting to a request for admissions shall state the basis for the objection in its response. Any matter admitted under this rule is conclusively established for the purpose of the pending proceeding unless the Judge, on motion, permits withdrawal or amendment of the admission.

(c) *Request for production, entry or inspection*. Any party, without leave of the Judge, may serve on another party a written request to produce and permit inspection, copying or photocopying of designated documents or objects, or to permit a party or his agent to enter upon designated property to inspect and gather information. A party served with such a request shall respond in writing within 25 days of service unless the party making the request agrees to a longer time. The Judge may order a shorter or longer period for responding. A party objecting to a request for production, entry or inspection shall state the basis for the objection in its response.

§ 2700.59 Failure to cooperate in discovery; sanctions.

Upon the failure of any person, including a party, to respond to a discovery request or upon an objection to such a request, the party seeking discovery may file a motion with the Judge requesting an order compelling discovery. If any person, including a party, fails to comply with an order compelling discovery, the Judge may make such orders with regard to the failure as are just and appropriate, including deeming as established the matters sought to be discovered or dismissing the proceeding in favor of the party seeking discovery. For good cause shown the Judge may excuse an objecting party from complying with the request.

§ 2700.60 Subpoenas.

(a) *Compulsory attendance of witnesses and production of documents*. The Commission and its Judges are authorized to issue subpoenas, on their own motion or on the oral or written application of a party, requiring the attendance of witnesses and the production of documents or physical evidence. A subpoena may be served by any person who is at least 18 years of age. A subpoena may also be served by registered or certified mail, return receipt requested, but, in such case, any risk of delivery is on the serving party. A copy of the subpoena bearing a certificate of service shall be filed with the Commission or the Judge.

(b) *Fees payable to witnesses*. Subpoenaed witnesses shall be paid the same fees and mileage as are paid in the district courts of the United States. The witness fees and mileage shall be paid by the party at whose request the witness appears, or by the Commission if a witness is subpoenaed on the motion of the Commission or a Judge. This paragraph does not apply to Government

employees who are called as witnesses by the Government.

(c) *Motions to revoke or modify subpoenas.* Any person served with a subpoena may move within 5 days of service or at the hearing, whichever is sooner, to revoke or modify the subpoena. The Commission or the Judge, as appropriate, shall revoke or modify the subpoena if it seeks information outside the proper scope of discovery as set forth in § 2700.56(b); or if it does not describe with sufficient particularity the evidence required to be produced; or if for any other reason it is found to be invalid or unreasonable. The Commission or the Judge shall set forth a concise statement of the grounds for such ruling.

(d) *Availability of transcript.* Persons compelled to submit evidence at a public proceeding are entitled to obtain, on payment of prescribed costs, a transcript of that part of the proceeding that sets forth their testimony or refers to their production of evidence.

(e) *Failure to comply.* Upon the failure of any person to comply with an order to testify or with a subpoena issued by the Commission or the Judge, the Judge or the Commission's General Counsel, at the request of the Judge or at the direction of the Commission, may undertake to initiate proceedings in the appropriate district court of the United States for the enforcement of the subpoena.

§ 2700.61 Name of miner informant.

A Judge shall not, except in extraordinary circumstances, disclose or order a person to disclose to an operator or his agent the name of an informant who is a miner.

§ 2700.62 Name of miner witness.

A Judge shall not, until 2 days before a hearing, disclose or order a person to disclose to an operator or his agent the name of a miner who is expected by the Judge to testify or whom a party expects to summon or call as a witness.

§ 2700.63 Evidence; presentation of case.

(a) Relevant evidence, including hearsay evidence, that is not unduly repetitious or cumulative is admissible.

(b) The proponent of an order has the burden of proof. A party shall have the right to present his case or defense by oral or documentary evidence, to submit rebuttal evidence, and to conduct such cross-examination as may be required for a full and true disclosure of the facts.

§ 2700.64 Retention of exhibits.

All exhibits received in evidence in a hearing or submitted for the record in any proceeding before the Commission shall be retained with the official record of the proceeding. The withdrawal of original exhibits may be permitted by the Commission or the Judge, upon request and after notice to the other parties, if true copies are substituted, where practical, for the originals.

§ 2700.65 Proposed findings, conclusions and orders.

The Judge may require the submission of proposed findings of fact, conclusions of law, and orders, together with supporting briefs. The proposals shall be served upon all parties, and shall contain adequate references to the record and authorities.

§ 2700.66 Summary disposition of proceedings.

(a) *Generally.* When a party fails to comply with an order of a Judge or these rules, except as provided in paragraph (b) of this section, an order to show cause shall be directed to the party before the entry of any order of default or dismissal. The order shall be mailed by registered or certified mail, return receipt requested.

(b) *Failure to attend hearing.* If a party fails to attend a scheduled hearing, the Judge, where appropriate, may find the party in default or dismiss the proceeding without issuing an order to show cause.

(c) *Penalty proceedings.* When the Judge finds a party in default in a civil penalty proceeding, the Judge shall also enter an order assessing appropriate penalties and directing that such penalties be paid.

§ 2700.67 Summary decision of the Judge.

(a) *Filing of motion for summary decision.* At any time after commencement of a proceeding and no later than 25 days before the date fixed for the hearing on the merits, a party may move the Judge to render summary decision disposing of all or part of the proceeding. Filing of a summary decision motion and an opposition thereto shall be effective upon receipt.

(b) *Grounds.* A motion for summary decision shall be granted only if the entire record, including the pleadings, depositions, answers to interrogatories, admissions, and affidavits, shows:

(1) That there is no genuine issue as to any material fact; and

(2) That the moving party is entitled to summary decision as a matter of law.

(c) *Form of motion.* A motion shall be accompanied by a memorandum of points and authorities specifying the grounds upon which the party seeks summary decision and a statement of material facts specifying each material fact as to which the party contends there is no genuine issue. Each material fact set forth in the statement shall be supported by a reference to accompanying affidavits or other verified documents.

(d) *Form of opposition.* An opposition to a motion for summary decision shall include a memorandum of points and authorities specifying why the moving party is not entitled to summary decision and may be supported by affidavits or other verified documents. The opposition shall also include a separate concise statement of each genuine issue of material fact necessary to be litigated, supported by a reference to any accompanying affidavits or other verified documents. Material facts identified as not in issue by the moving party shall be deemed admitted for purposes of the motion unless controverted by the statement in opposition. If a party does not respond in opposition, summary decision, if appropriate, shall be entered in favor of the moving party.

(e) *Affidavits.* Supporting and opposing affidavits shall be made on personal knowledge and shall show affirmatively that the affiant is competent to testify to the matters stated. Sworn or certified copies of all papers or parts of papers referred to in an affidavit shall be attached to the affidavit or be incorporated by reference if not otherwise a matter of record. The judge shall permit affidavits to be supplemented or opposed by depositions, answers to interrogatories, admissions, or further affidavits.

(f) *Case not fully adjudicated on motion.* If a motion for summary decision is denied in whole or in part, the Judge shall ascertain what material facts are controverted and shall issue an order directing further proceedings as appropriate.

[58 FR 12164, Mar. 3, 1993, as amended at 71 FR 44208, Aug. 4, 2006]

§ 2700.68 Substitution of the Judge.

(a) *Generally.* Should a Judge become unavailable to the Commission, the proceedings assigned to him shall be reassigned to a substitute Judge.

(b) *Substitution following a hearing.* The substitute Judge may render a decision based upon the existing record, provided the parties are notified of his intent and they are given an opportunity to object. An objection to the Judge rendering a decision based upon the existing record shall be filed within 10 days following receipt of the Judge's notice, or the objection shall be deemed to be waived. An objection shall be founded upon a showing of a need for the resolution of conflicting material testimony requiring credibility determinations. Upon good cause shown the Judge may order a further hearing on the merits, which shall be limited, so far as practicable, to the testimony in dispute.

§ 2700.69 Decision of the Judge.

(a) *Form and content of the Judge's decision.* The Judge shall make a decision that constitutes his final disposition of the proceedings. The decision shall be in writing and shall include all findings of fact and conclusions of law, and the reasons or bases for them, on all the material issues of fact, law or discretion presented by the record, and an order. If a decision is announced orally from the bench, it shall be reduced to writing after the filing of the transcript. An order by a Judge approving a

settlement proposal is a decision of the Judge.

(b) *Termination of the Judge's jurisdiction.* Except to the extent otherwise provided herein, the jurisdiction of the Judge terminates when his decision has been issued.

(c) *Correction of clerical errors.* At any time before the Commission has directed that a Judge's decision be reviewed, and on his own motion or the motion of a party, the Judge may correct clerical errors in decisions, orders or other parts of the record. After the Commission has directed that a Judge's decision be reviewed, the Judge may correct such errors with the leave of the Commission. If a Judge's decision has become the final order of the Commission, the Judge may correct such errors with the leave of the Commission. Neither the filing of a motion to correct a clerical error, nor the issuance of an order or amended decision correcting a clerical error, shall toll the time for filing a petition for discretionary review of the Judge's decision on the merits.

(d) *Effect of decision of Judge.* A decision of a Judge is not a precedent binding upon the Commission.

[58 FR 12164, Mar. 3, 1993, as amended at 71 FR 44209, Aug. 4, 2006; 72 FR 2192, Jan. 18, 2007]

Subpart H—Review by the Commission

§ 2700.70 Petitions for discretionary review.

(a) *Procedure.* Any person adversely affected or aggrieved by a Judge's decision or order may file with the Commission a petition for discretionary review within 30 days after issuance of the decision or order. Filing of a petition for discretionary review is effective upon receipt. Two or more parties may join in the same petition; the Commission may consolidate related petitions. Procedures governing petitions for review of temporary reinstatement orders are found at § 2700.45(f).

(b) *Review discretionary.* Review by the Commission shall not be a matter of right but of the sound discretion of the Commission. Review by the Commission shall be granted only by affirmative vote of at least two of the Commissioners present and voting.

(c) *Grounds.* Petitions for discretionary review shall be filed only upon one or more of the following grounds:

(1) A finding or conclusion of material fact is not supported by substantial evidence;

(2) A necessary legal conclusion is erroneous;

(3) The decision is contrary to law or to the duly promulgated rules or decisions of the Commission;

(4) A substantial question of law, policy, or discretion is involved; or

(5) A prejudicial error of procedure was committed.

(d) *Requirements.* Each issue shall be separately numbered and plainly and concisely stated, and shall be supported by detailed citations to the record, when assignments of error are based on the record, and by statutes, regulations, or other principal authorities relied upon. Except by permission of the Commission and for good cause shown, petitions for discretionary review shall not exceed 35 pages. Except for good cause shown, no assignment of error by any party shall rely on any question of fact or law upon which the Judge had not been afforded an opportunity to pass.

(e) *Statement in opposition to petition.* A statement in opposition to a petition for discretionary review may be filed, but the opportunity for such filing shall not require the Commission to delay its action on the petition.

(f) *Motion for leave to exceed page limit.* A motion requesting leave to exceed the page limit shall be received not less than 3 days prior to the date the petition for discretionary review is due to be filed, shall state the total number of pages proposed, and shall comply with § 2700.10. Filing of a motion requesting an extension of page limit is effective upon receipt. The motion and any statement in opposition shall include proof of service on all parties by a means of delivery no less expeditious than that used for filing the motion, except that if service by electronic transmission (email) is impossible, the filing party must serve in person, by third party commercial carrier, or by facsimile transmission, resulting in same-day delivery.

(g) *Scope of review*. If a petition is granted, review shall be limited to the issues raised by the petition, unless the Commission directs review of additional issues pursuant to § 2700.71.

(h) *Denial of petition*. A petition not granted within 40 days after the issuance of the Judge's decision is deemed denied.

[58 FR 12164, Mar. 3, 1993, as amended at 64 FR 48713, Sept. 8, 1999; 71 FR 44209, Aug. 4, 2006; 78 FR 77359, Dec. 23, 2013]

§ 2700.71 Review by the Commission on its own motion.

At any time within 30 days after the issuance of a Judge's decision, the Commission may, by the affirmative vote of at least two of the Commissioners present and voting, direct the case for review on its own motion. Review shall be directed only upon the ground that the decision may be contrary to law or Commission policy or that a novel question of policy has been presented. The Commission shall state in such direction for review the specific issue of law, Commission policy, or novel question of policy to be reviewed. Review shall be limited to the issues specified in such direction for review.

§ 2700.72 [Reserved]

§ 2700.73 Procedure for intervention.

After the Commission has directed a case for review, a person may move to intervene. A motion to intervene shall be filed within 30 days after the Commission's direction for review unless the Commission, for good cause shown, allows a later filing. Intervention before the Commission shall not be a matter of right but of the sound discretion of the Commission. The movant shall set forth:

(a) A legally protectible interest directly relating to the property or events that are the subject of the case on review;

(b) A showing that the disposition of the proceeding may impair or impede his ability to protect that interest;

(c) The reasons why the movant's interest is not adequately represented by parties already involved in the proceeding; and

(d) The reasons why the movant should be excused for failing to file for intervention before the Judge. A motion for intervention shall also show that the granting of the motion will not unduly delay the proceeding or prejudice any party and shall explain why the movant's participation as an amicus curiae would be inadequate. If the Commission permits intervention, the Commission's order shall specify the time within which the intervenor's brief and any response or reply may be filed. In denying a motion to intervene, the Commission may alternatively permit the movant to participate in the proceeding as amicus curiae.

§ 2700.74 Procedure for participation as amicus curiae.

(a) After the Commission has directed a case for review, any person may move to participate as amicus curiae. Such participation before the Commission shall not be a matter of right but of the sound discretion of the Commission. A motion for participation as amicus curiae shall set forth the interest of the movant; indicate which party's position, if any, the movant supports; the reason why an amicus brief is desirable and why the matters asserted are relevant to the disposition of the case; and show that the granting of the motion will not unduly delay the proceeding or prejudice any party. The movant may conditionally attach its brief to its motion for participation as amicus curiae.

(b) The brief of an amicus curiae shall be filed within the initial briefing period (*see* § 2700.75(a)(1)) allotted to the party whose position the amicus curiae supports.

(c) In the interest of avoiding duplication of argument, however, the Commission may permit the filing of an amicus curiae brief within 20 days after the close of the briefing period set forth in § 2700.75(a)(1), provided that the amicus curiae's motion for participation as an amicus curiae is filed within the initial briefing period (*see* § 2700.75(a)(1)) allotted to the party whose position the amicus curiae supports. If the Commission grants any such motion, the Commission's order shall specify the time within which a

response or reply may be made to the amicus curiae brief.

(d) Any person who does not support a party in the proceeding must file its motion for participation as amicus curiae and brief no later than 20 days after initial briefs are filed (*see* § 2700.75(a)(1)). A motion for participation as amicus curiae must comply with the requirements set forth in paragraph (a) of this section. A brief of amicus curiae must comply with § 2700.75(c).

[58 FR 12164, Mar. 3, 1993, as amended at 64 FR 48714, Sept. 8, 1999; 71 FR 44209, Aug. 4, 2006; 71 FR 52211, Sept. 1, 2006]

§ 2700.75 Briefs.

(a) *Time to file*—(1) *Opening and response briefs*. Within 30 days after the Commission grants a petition for discretionary review, the petitioner shall file his opening brief. If the petitioner desires, he may notify the Commission and all other parties within the 30-day period that his petition and any supporting memorandum are to constitute his brief. Other parties may file response briefs within 30 days after the petitioner's brief is served. If the Commission directs review on its own motion, all parties shall file any opening briefs within 30 days of the direction for review. In such cases, a party may file a response brief within 20 days after service of the opposing party's opening brief.

(2) *Reply briefs*. In cases where the Commission has granted a petition for discretionary review, the petitioner may file a reply brief within 20 days after the service of the response briefs.

(b) *Additional briefs*. No further briefs shall be filed except by leave of the Commission.

(c) *Length of brief*. Except by permission of the Commission and for good cause shown, opening and response briefs shall not exceed 35 pages, and reply briefs shall not exceed 15 pages. A brief of an amicus curiae shall not exceed 25 pages. A brief of an intervenor shall not exceed the page limitation applicable to the party whose position it supports in affirming or reversing the Judge, or if a different position is taken, such brief shall not exceed 25 pages. Tables of contents or authorities shall not be counted against the length of a brief.

(d) *Motion for extension of time*. A motion for an extension of time to file a brief shall comply with § 2700.9. The Commission may decline to accept a brief that is not timely filed.

(e) *Consequences of petitioner's failure to file brief*. If a petitioner fails to timely file a brief or to designate the petition as his brief, the direction for review may be vacated.

(f) *Motion for leave to exceed page limit*. A motion requesting leave to exceed the page limit for a brief shall be received not less than 3 days prior to the date the brief is due to be filed, shall state the total number of pages proposed, and shall comply with § 2700.10. Filing of a motion requesting an extension of page limit is effective upon receipt. The motion and any statement in opposition shall include proof of service on all parties by a means of delivery no less expeditious than that used for filing the motion, except that if service by electronic transmission (email) is impossible, the filing party must serve in person, by third party commercial carrier, or by facsimile transmission, resulting in same-day delivery.

(g) *Number of copies*. Unless otherwise ordered or stated in this part, only the original of a document shall be filed.

(h) *Table of contents*. Each opening and response brief filed with the Commission shall contain a table of contents. Unless otherwise ordered by the Commission, a party is not required to submit a table of contents for a previously filed petition for discretionary review that has been designated as the party's opening brief pursuant to paragraph (a) of this section.

[58 FR 12164, Mar. 3, 1993, as amended at 64 FR 48714, Sept. 8, 1999; 71 FR 44209, Aug. 4, 2006; 78 FR 77359, Dec. 23, 2013; 79 FR 3105, Jan. 17, 2014]

§ 2700.76 Interlocutory review.

(a) *Procedure*. Interlocutory review by the Commission shall not be a matter of right but of the sound discretion of the Commission. Procedures governing petitions for review of temporary reinstatement orders are found at § 2700.45(f).

(1) Review cannot be granted unless:

(i) The judge has certified, upon his own motion or the motion of a party, that his interlocutory ruling involves a controlling question of law and that in his opinion immediate review will materially advance the final disposition of the proceeding; or

(ii) The Judge has denied a party's motion for certification of the interlocutory ruling to the Commission, and the party files with the Commission a petition for interlocutory review within 30 days of the Judge's denial of such motion for certification.

(2) In the case of either paragraph (a)(1)(i) or (ii) of this section, the Commission, by a majority vote of the full Commission or a majority vote of a duly constituted panel of the Commission, may grant interlocutory review upon a determination that the Judge's interlocutory ruling involves a controlling question of law and that immediate review may materially advance the final disposition of the proceeding. Interlocutory review by the Commission shall not operate to suspend the hearing unless otherwise ordered by the Commission. Any grant or denial of interlocutory review shall be by written order of the Commission.

(b) *Petitions for interlocutory review*. Where the Judge denies a party's motion for certification of an interlocutory ruling and the party seeks interlocutory review, a petition for interlocutory review shall be in writing and shall not exceed 15 pages. A copy of the Judge's interlocutory ruling sought to be reviewed and of the Judge's order denying the petitioner's motion for certification shall be attached to the petition.

(c) *Briefs*. When the Commission grants interlocutory review, it shall also issue an order which addresses page limits on briefs and the sequence and schedule for filing of initial briefs, and, if permitted by the order, reply briefs.

(d) *Scope of review*. Unless otherwise specified in the Commission's order granting interlocutory review, review shall be confined to the issues raised in the Judge's certification or to the issues raised in the petition for interlocutory review.

[58 FR 12164, Mar. 3, 1993, as amended at 64 FR 48714, Sept. 8, 1999; 67 FR 18485, Apr. 16, 2002; 71 FR 44209, Aug. 4, 2006]

§ 2700.77 Oral argument.

Oral argument may be ordered by the Commission on its own motion or on the motion of a party. A party requesting oral argument shall do so by separate motion no later than the time that it files its opening or response brief.

§ 2700.78 Reconsideration.

(a) A petition for reconsideration must be filed with the Commission within 10 days after a decision or order of the Commission. Any response must be filed with the Commission within 10 days of service of the petition.

(b) Unless the Commission orders otherwise, the filing of a petition for reconsideration shall not stay the effect of a decision or order of the Commission.

[58 FR 12164, Mar. 3, 1993, as amended at 71 FR 44209, Aug. 4, 2006]

§ 2700.79 Correction of clerical errors.

The Commission may correct clerical errors in its decisions at any time.

Subpart I—Miscellaneous

§ 2700.80 Standards of conduct; disciplinary proceedings.

(a) *Standards of conduct*. Individuals practicing before the Commission or before Commission Judges shall conform to the standards of ethical conduct required of practitioners in the courts of the United States.

(b) *Grounds*. Disciplinary proceedings may be instituted against anyone who is practicing or has practiced before the Commission on grounds that such person has engaged in unethical or unprofessional conduct; has failed to comply with these rules or an order of the Commission or its Judges; has been disbarred or suspended by a court or administrative agency; or has been disciplined by a Judge under paragraph (e) of this section.

(c) Disciplinary proceedings shall be subject to the following procedure:

(1) *Disciplinary referral.* Except as provided in paragraph (e) of this section, a Judge or other person having knowledge of circumstances that may warrant disciplinary proceedings against an individual who is practicing or has practiced before the Commission shall forward to the Commission for action such information in the form of a written disciplinary referral. Whenever the Commission receives a disciplinary referral, the matter shall be assigned a docket number.

(2) *Inquiry by the Commission.* The Commission shall conduct an inquiry concerning a disciplinary referral and shall determine whether disciplinary proceedings are warranted. The Commission may require persons to submit affidavits setting forth their knowledge of relevant circumstances. If the Commission determines that disciplinary proceedings are not warranted, it shall issue an order terminating the referral.

(3) *Transmittal and hearing.* Whenever, as a result of its inquiry, the Commission, by a majority vote of the full Commission or a majority vote of a duly constituted panel of the Commission, determines that the circumstances warrant a hearing, the Commission's Chief Administrative Law Judge shall assign the matter to a Judge, other than the referring Judge, for hearing and decision. The Commission shall specify the disciplinary issues to be resolved through hearing and may designate counsel to prosecute the matter before the Judge. The Judge shall provide the opportunity for reply and hearing on the specific disciplinary matters at issue. The individual shall have the opportunity to present evidence and cross-examine witnesses. The Judge's decision shall include findings of fact and conclusions of law and either an order dismissing the proceedings or an appropriate disciplinary order, which may include reprimand, suspension, or disbarment from practice before the Commission.

(d) *Appeal from Judge's decision.* Any person adversely affected or aggrieved by the Judge's decision is entitled to review by the Commission. A person seeking such review shall file a notice of appeal with the Commission within 30 days after the issuance of the Judge's decision.

(e) *Misconduct before a Judge.* A Judge may order the removal of any person, including a representative of a party, who engages in disruptive conduct in the Judge's presence. If a representative is ordered removed, the Judge shall allow the party represented by the person a reasonable time to engage another representative. In all instances of removal of a person for disruptive conduct, the Judge shall place in the record a written statement on the matter. A party aggrieved by a Judge's order of removal may appeal by requesting interlocutory review pursuant to § 2700.76 or, alternatively, may assign the Judge's ruling as error in a petition for discretionary review.

[58 FR 12164, Mar. 3, 1993, as amended at 71 FR 44209, Aug. 4, 2006]

§ 2700.81 Recusal and disqualification.

(a) *Recusal.* A Commissioner or a Judge may recuse himself from a proceeding whenever he deems such action appropriate.

(b) *Request to withdraw.* A party may request a Commissioner or a Judge to withdraw on grounds of personal bias or other disqualification. A party shall make such a request by promptly filing an affidavit setting forth in detail the matters alleged to constitute personal bias or other grounds for disqualification.

(c) *Procedure if Commissioner or Judge does not withdraw.* If, upon being requested to withdraw pursuant to paragraph (b) of this section, the Commissioner or the Judge does not withdraw from the proceeding, he shall so rule upon the record, stating the grounds for his ruling. If the Judge does not withdraw, he shall proceed with the hearing, or, if the hearing has been completed, he shall proceed with the issuance of his decision, unless the Commission stays the hearing or further proceedings upon the granting of a petition for interlocutory review of the Judge's decision not to withdraw.

§ 2700.82 Ex parte communications.

(a) For purposes of this section, the following definitions shall apply:

(1) *Ex parte communication* means an oral or written communication not on the public record concerning any matter or proceeding with respect to which

reasonable prior notice to all parties has not been given. A status or informational request does not constitute an ex parte communication.

(2) *Status or informational request* means a request for a status report on any matter or proceeding or a request concerning filing requirements or other docket information.

(3) *Merits of a case,* which shall be broadly construed by the Commission, includes discussion of the factual or legal issues in a case or resolution of those issues.

(b) *Prohibited ex parte communication.* There shall be no ex parte communication with respect to the merits of a case not concluded, between the Commission, including any member, Judge, officer, or agent of the Commission who is employed in the decisional process, and any of the parties, intervenors, representatives, amici, or other interested persons.

(c) *Procedure in case of violation.* (1) In the event a prohibited ex parte communication occurs, the Commission or the Judge may make such orders or take such action to remedy the effect of the ex parte communication as circumstances require. Upon notice and hearing, the Commission may take disciplinary action against any person who knowingly and willfully makes or causes to be made a prohibited ex parte communication.

(2) A memorandum setting forth all ex parte communications, whether prohibited or not, shall be placed on the public record of the proceeding.

(d) *Inquiries.* Any inquiries concerning filing requirements, the status of cases before the Commission, or docket information shall be directed to the Office of General Counsel or the Docket Office of the Federal Mine Safety and Health Review Commission, 1331 Pennsylvania Avenue NW., Suite 520N, Washington, DC 20004–1710.

[58 FR 12164, Mar. 3, 1993, as amended at 67 FR 60862, Sept. 27, 2002; 77 FR 48430, Aug. 14, 2012]

§ 2700.83 Authority to sign orders.

The Chairman or other designated Commissioner is authorized to sign on behalf of the Commissioners, orders disposing of the following procedural motions: motions for extensions of time, motions for permission to file briefs in excess of page limits, motions to accept late filed briefs, motions to consolidate, motions to expedite proceedings, motions for oral argument, and similar procedural motions. A person aggrieved by such an order may, within 10 days of the date of the order, file a motion requesting that the order be signed by the participating Commissioners.

Subpart J—Simplified Proceedings

SOURCE: 75 FR 81462, Dec. 28, 2010, unless otherwise noted.

§ 2700.100 Purpose.

(a) The purpose of this Simplified Proceedings subpart is to provide simplified procedures for resolving civil penalty contests under the Federal Mine Safety and Health Act of 1977, so that parties before the Commission may reduce the time and expense of litigation while being assured due process and a hearing that meets the requirements of the Administrative Procedure Act, 5 U.S.C. 554. These procedural rules will be applied to accomplish this purpose.

(b) Procedures under this subpart are simplified in a number of ways. The major differences between these procedures and those that would otherwise apply in subparts A, C, G, H, and I of this part are as follows.

(1) Answers to petitions for assessment of penalty are not required.

(2) Motions are eliminated to the greatest extent practicable.

(3) Early discussions among the parties and the Administrative Law Judge are required to narrow and define the disputes between the parties.

(4) The parties are required to provide certain materials early in the proceedings.

(5) Discovery is not permitted except as ordered by the Administrative Law Judge.

(6) Interlocutory appeals are not permitted.

(7) The administrative process is streamlined, but hearings will be full due process hearings. The parties will argue their case orally before the Judge at the conclusion of the hearing

instead of filing briefs. In many instances, the Judge will render a decision from the bench.

§ 2700.101 Eligibility for simplified proceedings.

Cases designated for Simplified Proceedings will not involve fatalities, injuries or illnesses, and will generally include one or more of the following characteristics:

(a) The case involves only citations issued under section 104(a) of the Mine Act.

(b) The proposed penalties were not specially assessed under 30 CFR 100.5.

(c) The case does not involve complex issues of law or fact.

(d) The case involves a limited number of citations to be determined by the Chief Judge or designee.

(e) The case involves a limited penalty amount to be determined by the Chief Judge or designee.

(f) The case will involve a hearing of limited duration to be determined by the Chief Judge or designee.

(g) The case does not involve only legal issues.

(h) The case does not involve expert witnesses.

§ 2700.102 Commission commencement of simplified proceedings.

(a) *Designation.* Upon receipt of a petition for assessment of penalty, the Chief Administrative Law Judge, or designee, has the authority to designate an appropriate case for Simplified Proceedings.

(b) *Notice of designation.* After a case has been designated for Simplified Proceedings, the Commission will issue a Notice of Designation for Simplified Proceedings. The Notice will inform parties that the case has been designated for Simplified Proceedings, state the name and contact information for the Commission Administrative Law Judge assigned to the case, provide instructions for filing a notice of appearance in the Simplified Proceedings, and state that the operator need not file an answer to the petition for assessment of penalty. The Commission will send the notice of designation to the parties' addresses listed on the petition for assessment of penalty.

(c) *Notice of appearance.* Unless the contact information described in this paragraph has already been provided to the Judge, within 15 calendar days after receiving a notice of designation, the parties shall file notices of appearance with the assigned Judge. Each notice of appearance shall provide the following information for the counsel or representative acting on behalf of the party: Name, address, business telephone number, cell telephone number if available, fax number if available, and e-mail address if available. Notices of appearance shall be served on all parties in accordance with the provisions of § 2700.7.

(d) *No filing of an answer under Subpart C of this part.* If a case has been designated for Simplified Proceedings, an answer pursuant to § 2700.29 is not required to be filed.

§ 2700.103 Party request for simplified proceedings.

(a) *Party request.* Any party may request that a case be designated for Simplified Proceedings. The request must be in writing and should address the characteristics specified in § 2700.101. The request must be filed with the Commission in accordance with the provisions of § 2700.5 and served on all parties in accordance with the provisions of § 2700.7. The requesting party shall confer or make reasonable efforts to confer with the other parties and shall state in the request if any other party opposes or does not oppose the request. Parties opposing the request shall have eight business days after service of the motion to file an opposition.

(b) *Judge's ruling on request.* The Chief Administrative Law Judge or the Judge assigned to the case may grant a party's request and designate a case for Simplified Proceedings at the Judge's discretion.

(c) *Notice of appearance.* Unless the contact information described in this paragraph has already been provided to the Judge, within 15 calendar days after receiving an order granting a request for Simplified Proceedings, the parties shall file with the Judge notices of appearance described in § 2700.102(c). Notices of appearance shall

be served on all parties in accordance with the provisions of § 2700.7.

(d) *No filing of an answer under Subpart C of this part.* If a case has been designated for Simplified Proceedings, an answer pursuant to § 2700.29 is not required to be filed. If a request for Simplified Proceedings is denied, the period for filing an answer will begin to run upon issuance of the Judge's order denying Simplified Proceedings.

§ 2700.104 Discontinuance of simplified proceedings.

(a) *Procedure.* If it becomes apparent at any time that a case is not appropriate for Simplified Proceedings, the Judge assigned to the case may, upon motion by any party or upon the Judge's own motion, discontinue Simplified Proceedings and order the case to continue under conventional rules.

(b) *Party motion.* At any time during the proceedings but no later than 30 days before the scheduled hearing, any party may move that Simplified Proceedings be discontinued and that the matter continue under conventional procedures. A motion to discontinue must explain why the case is inappropriate for Simplified Proceedings. The moving party shall confer or make reasonable efforts to confer with the other parties and shall state in the motion if any other party opposes or does not oppose the motion. Parties opposing the motion shall have eight business days after service of the motion to file an opposition.

(c) *Ruling.* If Simplified Proceedings are discontinued, the Judge may issue such orders as are necessary for an orderly continuation under conventional rules.

§ 2700.105 Disclosure of information by the Parties.

(a) Within 45 calendar days after a case has been designated for Simplified Proceedings, the parties shall provide any information in a party's possession, custody, or control that the disclosing party or opposing party may use to support its claims or defenses. Any material or object that cannot be copied, or the copying of which would be unduly burdensome, shall be described and its location specified. Materials required to be disclosed include, but are not limited to, inspection notes from the entire subject inspection, rebuttal forms, citation documentation, narratives, photos, diagrams, preshift and onshift reports, training documents, mine maps, witness statements (subject to the provisions of § 2700.61), witness lists, and written opinions of expert witnesses, if any.

(b) If any items are withheld from disclosure on grounds of privilege, the disclosing party shall provide a log describing each item and stating the reason(s) why it was not produced. The privilege log shall provide an index, identifying the allegedly privileged documents and shall provide sufficient detail to permit an informed decision as to whether the document is at least potentially privileged. Specifically, the index must include: A description of the document, including its subject matter and the purpose for which it was created; the date the document was created; the name and job title of the author of the document; and if applicable, the name and job title of the recipient(s) of the document. The judge may order an *in camera* inspection of the privileged documents, if necessary, to determine the proper application of the privilege.

§ 2700.106 Pre-Hearing Conference.

(a) *When held.* As early as practicable after the parties have received the materials set forth in § 2700.105, the presiding Judge will order and conduct a pre-hearing conference. At the discretion of the Judge, the pre-hearing conference may be held in person, by telephone, or electronic means. After receipt of the materials set forth in § 2700.105 and prior to the pre-hearing conference, parties are required to engage in a discussion to explore the possibility of settlement.

(b) *Content.* At the pre-hearing conference, the parties will discuss the following: Settlement efforts in the case; the narrowing of issues; an agreed statement of issues and facts; defenses; witnesses and exhibits; motions; and any other pertinent matter. Within a time determined by the Judge during the pre-hearing conference, the parties must provide each other with documents or materials intended for submission as exhibits at the hearing that

have not already been provided in accordance with the provisions of § 2700.105. At the conclusion of the conference, the Judge will issue an order setting forth any agreements reached by the parties, and will specify in the order the issues to be addressed by the parties at hearing.

§ 2700.107 Discovery.

Discovery is not permitted except as ordered by the Administrative Law Judge.

§ 2700.108 Hearing.

(a) *Procedures*. As soon as practicable after the conclusion of the pre-hearing conference, the Judge will hold a hearing on any issue that remains in dispute. The hearing will be in accordance with subpart G of this part, except for §§ 2700.56, 2700.57, 2700.58, 2700.59, 2700.65, and 2700.67, which will not apply.

(b) *Agreements*. At the beginning of the hearing, the Judge will enter into the record all agreements reached by the parties as well as defenses raised during the pre-hearing conference. The parties and the Judge then will attempt to resolve or narrow the remaining issues. The Judge will enter into the record any further agreements reached by the parties.

(c) *Evidence*. The Judge will receive oral, physical, or documentary evidence that is relevant, and not unduly repetitious or cumulative. Testimony will be given under oath or affirmation. The parties are reminded that the Federal Rules of Evidence do not apply in Commission proceedings. Any evidence not disclosed as required by §§ 2700.105 and 2700.106(b), including the testimony of witnesses not identified pursuant to § 2700.106(b), shall be inadmissible at the hearing, except where extraordinary circumstances are established by the party seeking to offer such evidence.

(d) *Court reporter*. A court reporter will be present at the hearing. An official verbatim transcript of the hearing will be prepared and filed with the Judge.

(e) *Oral and written argument*. Each party may present oral argument at the close of the hearing. Post-hearing briefs will not be allowed except by order of the Judge.

(f) *Judge's decision*. The Judge shall make a decision that constitutes the final disposition of the proceedings within 60 calendar days after the hearing. The decision shall be in writing and shall include all findings of fact and conclusions of law; the reasons or bases for them on all the material issues of fact, law, or discretion presented by the record; and an order. If a decision is announced orally from the bench, it shall be reduced to writing within 60 calendar days after the hearing. An order by a Judge approving a settlement proposal is a decision of the Judge.

§ 2700.109 Review of Judge's Decision.

After the issuance of the Judge's written decision, any party may petition the Commission for review of the Judge's written decision as provided for in subpart H of this part.

§ 2700.110 Application.

The rules in this subpart will govern proceedings before a Judge in a case designated for Simplified Proceedings under §§ 2700.102 and 2700.103. The provisions of subparts A and I apply to Simplified Proceedings when consistent with these rules in subpart J. The provisions of subpart C of this part apply to Simplified Proceedings except for § 2700.29, which does not apply. The provisions of subpart G of this part apply to Simplified Proceedings except for §§ 2700.56, 2700.57, 2700.58, 2700.59, 2700.65, and 2700.67, which do not apply. The provisions of subpart H of this part apply to Simplified Proceedings except for § 2700.76, which does not apply. The provisions of subparts B, D, E and F of this part do not apply to Simplified Proceedings.

PART 2701—GOVERNMENT IN THE SUNSHINE ACT REGULATIONS

Sec.

2701.1 Purpose and scope.
2701.2 Open meetings policy; closure of meetings.
2701.3 Announcement of meetings.
2701.4 Request to open or close meeting.
2701.5 Petition for review.
2701.6 Discussion during open meetings.
2701.7 Expedited closing procedure.

AUTHORITY: Sec. 113, Federal Mine Safety and Health Act of 1977, Pub. L. 95–165 (30 U.S.C. 823).

SOURCE: 44 FR 2575, Jan. 12, 1979, unless otherwise noted.

§ 2701.1 Purpose and scope.

(a) *Purpose*. The purpose of this part is to implement the Government in the Sunshine Act, 5 U.S.C. 552b. The rules in this part are intended to open, to the extent practicable, the meetings of the Commission to public observation while preserving the Commission's ability to fulfill its responsibilities and respect the interests of persons in confidential consideration of sensitive matters.

(b) *Scope*. This part applies to all meetings of the Commission. A ''meeting of the Commission'' means a joint deliberation in person or by conference telephone call of at least a majority of either the members of the Commission or of a panel of three or more Commissioners that determines or results in the joint conduct or disposition of official Commission business, but does not include (1) deliberations regarding a decision to open or close a meeting, to withhold information about a meeting, and the circumstances of meetings, such as their time, place, and subject matter, and (2) the individual deliberations of Commission members of matters considered upon circulated documents or other notation procedure.

§ 2701.2 Open meetings policy; closure of meetings.

(a) *Policy*. Commission meetings will generally be open to public observation, including meetings concerning the disposition by the Commission of a formal adjudication. See 5 U.S.C. 522b(c)(10).

(b) *Closure*. Meetings may be closed, or certain information about a meeting may not be disclosed under the circumstances contemplated by 5 U.S.C. 522b(c)(1)–(10), and under the procedures specified by 5 U.S.C. 552b (d) and (f). Commission employees may attend closed meetings of the commission unless the notice of a closed meeting states otherwise.

§ 2701.3 Announcement of meetings.

(a) *Generally*. The Commission shall publicly announce and submit to the FEDERAL REGISTER at least 7 days before a meeting, the time, place, subject matter of a meeting, whether it is to be open or closed, and the name and phone number of the Commission employee who will respond to requests for information about the meeting. The description of the subject matter of a meeting at which the Commission will consider adjudicatory matters, shall include the names and docket numbers of the cases to be considered. The Commission shall also contact, by phone or mail, the parties to the cases to be considered at the meeting, shall post a copy of a notice of the meeting at the Office of Public Information, shall mail notices to persons who have requested inclusion of their names on a meeting mailing list, and may issue press releases.

(b) *Shorter notice*. If a majority of the members of the Commission or a panel of three or more Commissioners determines by a recorded vote that pressing Commission business requires that a meeting be called in less than 7 days, the announcement required by paragraph (a) of this section shall be made at the earliest practicable time.

(c) *Changes in time, place, subject matter, and decision whether to open or close after public announcement of meeting*. If the time or place of a meeting publicly announced is changed, or an item to be considered at such a meeting is to be deleted, the change or deletion shall be publicly announced without a recorded vote at the earliest practicable time in the manner required by paragraph (a) of this section. The subject matter of a meeting publicly announced shall not be expanded and the decision to open or close such a meeting shall not be changed unless a majority of the members of the Commission or if a panel of three or more Commissioners determines by a recorded vote that agency business so requires and that no earlier announcement of the change was possible; the Commission shall publicly announce such a change and the vote of each member upon the change at the earliest practicable time.

§ 2701.4 Request to open or close meeting.

Any person may request that the Commission open a meeting that it has earlier decided to close. Any person whose interest may be directly affected by the opening of a meeting may request that the meeting be closed. Two copies of a request shall be filed in writing with the Executive Director of the Commission at the earliest practicable time, and no later than one hour before the meeting. A request to close shall state the interest of the person that may be adversely affected. The Commission shall take a recorded vote on the request if one member desires that it do so. The Executive Director shall inform the requesting person of whether a vote was taken, and, if so, its outcome. Requests shall be addressed as follows: Sunshine Act Request, Office of the Executive Director, Federal Mine Safety and Health Review Commission, 1331 Pennsylvania Avenue NW., Suite 520N, Washington, DC 20004–1710.

[44 FR 2575, Jan. 12, 1979, as amended at 67 FR 60862, Sept. 27, 2002; 77 FR 48430, Aug. 14, 2012]

§ 2701.5 Petition for review.

Any person may petition the Commission to review any action he alleges to be in violation of this part or 5 U.S.C. 552b that was taken by any employee or member of the Commission. The petition shall be in writing and shall be filed with the Executive Director within 30 days of the alleged violation. The Commission shall consider and rule upon the petition with expedition.

§ 2701.6 Discussion during open meetings.

Deliberations, discussions, comments, statements, or observations made during the course of an open meeting do not constitute actions of the Commission, nor do they necessarily represent the basis for any Commission action. Comments made by a Commissioner or an employee of the Commission may be advanced for purposes of discussion or argument, or as an aside, and may not reflect the views or ultimate position of that Commissioner or employee. Reasons for decisions stated by a Commissioner at an open meeting may be later changed by that Commissioner, as may a Commissioner's vote. For these reasons, persons who choose to act on the basis of discussions at open meetings do so entirely at their own risk and without any assurance that the Commission's final decisions will be reflective of the discussions or initial vote.

§ 2701.7 Expedited closing procedure.

(a) *Policy*. Although it is the general policy of the Commission to open to the public meetings that may be subject to closure, including meetings concerning adjudication of cases, the Commission may find it necessary in the public interest to close meetings. The purpose of this section is to provide an expedited closing procedure under 5 U.S.C. 552b(d)(4). The Commission has determined that, inasmuch as the Commission's responsibilities are almost entirely adjudicatory, a majority of its meetings may properly be closed under 5 U.S.C. 552b(c)(10). Although the Commission has to date held few meetings, those that have been held concerned the adjudication of cases and could properly have been closed.

(b) *Procedure*. A meeting may be closed if a majority of either the members of the Commission or of a panel of three or more Commissioners votes by recorded vote at the beginning of such a meeting to close it to the public. The record of the vote shall reflect the vote of each voting member and shall be made available to the public. A public announcement of the time, place, and subject matter of the meeting shall be made at the earliest practicable time, except to the extent that such information is exempt from disclosure under 5 U.S.C. 552b(c). Section 2701.3 does not apply to meetings closed under this section.

PART 2702—REGULATIONS IMPLEMENTING THE FREEDOM OF INFORMATION ACT

Sec.

2702.1 Purpose and scope.
2702.2 Location of headquarters.
2702.3 Requests for information.
2702.4 Materials available.

2702.5 Fees applicable—catagories of requesters.
2702.6 Fee schedule.
2702.7 No fees; waiver or reduction of fees.
2702.8 Advance payment of fees; interest; debt collection procedures.

AUTHORITY: Sec. 113, Federal Mine Safety and Health Act of 1977, Pub. L. 95–165 (30 U.S.C. 801 *et seq.*); 5 U.S.C. 552; Pub. L. 104–231, October 2, 1996, 110 Stat. 3048.

SOURCE: 45 FR 33607, May 20, 1980, unless otherwise noted.

§ 2702.1 Purpose and scope.

The Federal Mine Safety and Health Review Commission (Commission) is an independent agency with authority to adjudicate contests between the Mine Safety and Health Administration of the U.S. Department of Labor and private parties, as well as certain disputes solely between private parties, arising under the Federal Mine Safety and Health Act of 1977, 30 U.S.C. 801 *et seq.* The purpose of the rules in this part is to establish procedures for implementing the Freedom of Information Act, 5 U.S.C. 552, as amended by the Electronic Freedom of Information Act Amendments of 1996, Pub. L. No. 104–231, 110 Stat. 3048; to provide guidance for those seeking to obtain information from the Commission; and to make all information subject to disclosure pursuant to this subchapter and FOIA, and not otherwise protected by law, readily available to the public. Additional guidance on obtaining information from the Commission can be found in the document entitled ''FOIA Guide,'' which is available upon request from the Commission and on the Commission's Web site (*http://www.fmshrc.gov*). These rules apply only to records or information of the Commission or in the Commission's custody. This part does not affect discovery in adversary proceedings before the Commission. Discovery is governed by the Commission's Rules of Procedure in 29 CFR part 2700.

[72 FR 71790, Dec. 19, 2007]

§ 2702.2 Location of headquarters.

The Commission maintains its Headquarters office at 1331 Pennsylvania Avenue NW., Suite 520N, Washington, DC 20004–1710. The locations of other Commission offices may obtained from the Commission's Web site (*http://www.fmshrc.gov*).

[77 FR 48430, Aug. 14, 2012]

§ 2702.3 Requests for information.

(a) *Content of request.* All requests for information should be in writing and should be mailed or delivered to Chief FOIA Officer, Federal Mine Safety and Health Review Commission, 1331 Pennsylvania Avenue NW., Suite 520N, Washington, DC 20004–1710. See FOIA Guide for more information on the submission of requests, including requests submitted electronically or by facsimile. The words ''Freedom of Information Act Request'' should be printed on the face of the envelope. Requests for information shall describe the particular record requested to the fullest extent possible and specify the preferred form or format (including electronic formats) of the response. The Commission shall accommodate requesters as to form or format if the record is readily reproducible in the requested form or format. When requesters do not specify the preferred form or format of the response, the Commission shall respond in the form or format in which the record is most accessible to the Commission.

(b) *Response to request.* The Chief FOIA Officer will determine whether to comply with the request. Except in unusual circumstances, as described in paragraph (c) of this section, the determination will be made within 20 working days of receipt. Appeals of adverse decisions may be made, in writing, to the Chairman of the Commission, at the same address, within 20 working days of the decision. The sitting Commissioners, by majority vote, will decide appeals within 20 working days after receipt. In the event of a tie vote of those Commissioners, the Chief FOIA Officer's initial determination will be deemed approved by the Commission. Records to be disclosed shall be provided with the initial letter setting forth the determination as to the request or shall be sent as soon as possible thereafter.

(c) *Processing of request.* (1) In unusual circumstances as described in this paragraph, when additional time is

needed to respond to the initial request, the Commission shall acknowledge the request in writing within the 20-day period, describe the circumstances requiring the delay, and indicate the anticipated date for a substantive response that may not exceed 10 additional working days, except as provided in paragraph (d) of this section. With respect to a request for which a written notice has extended the time limit by 10 additional working days, and the Commission determines that it cannot make a response determination within that additional 10 working day period, the requester will be notified and provided an opportunity to limit the scope of the request so that it may be processed within the extended time limit, or an opportunity to arrange an alternative time frame for processing the request or a modified request. Refusal by the requester to reasonably modify the request or arrange for an alternative time frame shall be considered as a factor in determining whether exceptional circumstances exist for purposes of paragraph (d) of this section. For purposes of this paragraph, ''unusual circumstances'' that may justify a delay are:

(i) The need to search for and collect the requested records from other facilities that are separate from the office processing the request;

(ii) The need to search for, collect, and appropriately examine a voluminous amount of separate and distinct records that are requested in a single request;

(iii) The need for consultation, which shall be conducted with all practicable speed, with another agency having a substantial interest in the determination of the request, or among two or more components of the agency having substantial subject matter interest in the request; or

(iv) The need to consult with the submitter of requested information.

(2) Whenever it reasonably appears that certain requests by the same requester, or a group of requesters acting in concert, actually constitute a single request that would otherwise satisfy the unusual circumstances specified in this paragraph, and the requests involve clearly related matters, such requests may be aggregated for purposes of this paragraph. Multiple requests involving unrelated matters will not be aggregated.

(d) *Additional time to respond to request.* In the event that the Commission is unable to comply with the time limits for responding to a request specified in paragraphs (a) and (c) of this section, it may request additional time to complete its review of the records, and request a court to retain jurisdiction and allow it such additional time to complete its review, if it can show that exceptional circumstances exist and that it is exercising due diligence in responding to the request. For purposes of this paragraph, ''exceptional circumstances'' do not include a delay that results from a predictable workload of requests, unless the agency demonstrates reasonable progress in reducing its backlog of pending requests. Refusal by a person to reasonably modify the scope of a request or arrange an alternative time frame for processing the request (or a modified request) under paragraph (c) of this section shall be considered as a factor in determining whether exceptional circumstances exist for purposes of this paragraph.

(e)*Expedited processing of request.* (1) A person requesting records from the Commission pursuant to this section may request expedited processing of his request in cases in which he can demonstrate a compelling need for the records requested. For purposes of this paragraph a compelling need means:

(i) That a failure to obtain the requested records on an expedited basis could reasonably be expected to pose an imminent threat to the life or physical safety of an individual; or

(ii) The information is urgently needed by a person primarily engaged in disseminating information in order to inform the public concerning actual or alleged Federal Government activity.

(2) A demonstration of compelling need by a person making a request for expedited processing shall be made by a statement certified by such person to be true and correct to the best of his knowledge and belief. Notice of the determination whether to grant expedited processing in response to a requester's claim of compelling need

shall be provided to the person making the request within 10 calendar days after receipt of the request. The Commission will provide expeditious consideration of administrative appeals of determinations whether to provide expedited processing. Once a determination has been made to grant expedited processing, the Commission will process the request as soon as practicable.

(f) *Denial of request.* In denying a request for records, in whole or in part, the Commission shall state the reason for the denial; set forth the name and title or position of the person responsible for the denial of the request; make a reasonable effort to estimate the volume of the records denied; and provide this estimate to the person making the request, unless providing such an estimate would harm an interest protected by the exemption pursuant to which the request is denied. If an appeal is denied, the Commission's notice of denial shall inform the requester of the right to obtain judicial review of the Commission's action under 5 U.S.C. 552(a)(4)(B)–(G).

(g) *Partial response to request.* Any reasonably segregable portion of a record shall be provided to the person requesting it after the deletion of any exempt portions of the record. The amount of information deleted shall be indicated on the released portion of the record, at the place in the record the deletion is made if technically feasible, unless indicating the extent of the deletion would harm an interest protected by the exemption pursuant to which the deletion is made.

[62 FR 55335, Oct. 24, 1997, as amended at 67 FR 60863, Sept. 30, 2002; 72 FR 71790, Dec. 19, 2007; 77 FR 48430, Aug. 14, 2012]

§ 2702.4 Materials available.

(a) *FOIA Reading Room.* Materials which may be made publicly available for inspection and copying at the Commission's on-site FOIA Reading Room, 1331 Pennsylvania Avenue NW., Suite 520N, Washington, DC 20004–1710, include, but are not limited to:

(1) Final opinions, including concurring and dissenting opinions, as well as orders, made in the adjudication of cases;

(2) Those statements of policy and interpretations which have been adopted by the agency and are not published in the FEDERAL REGISTER;

(3) Administrative staff manuals and instructions to staff that affect a member of the public;

(4) Copies of all records, regardless of form or format, which have been released to any person under this subpart and which, because of the nature of their subject matter, the Commission has determined have become or are likely to become the subject of subsequent requests for substantially the same records; and

(5) A general index of records referred to under this paragraph (a).

(b) *E–FOIA Reading Room.* Materials created on or after November 1, 1996, under paragraphs (a)(1) through (5) of this section may also be accessed electronically through the Commission's Web site at *http://www.fmshrc.gov*.

[72 FR 71790, Dec. 19, 2007, as amended at 77 FR 48430, Aug. 14, 2012]

§ 2702.5 Fees applicable—categories of requesters.

(a) When documents are requested for commercial use, requesters will be assessed the full direct costs of searching for, reviewing for release, and duplicating the records sought.

(b) When records are being requested by educational or noncommercial scientific institutions whose purpose is scholarly or scientific research, and not for commercial use, the requester will be assessed only for the cost of duplicating the records sought, but no charge will be made for the first 100 paper pages reproduced.

(c) When records are being requested by representatives of the news media, the requester will be assessed only for the cost of duplicating the records sought, but no charge will be made for the first 100 paper pages reproduced.

(d) For any other request not described in paragraphs (a) through (c) of this section, the requester will be assessed the full direct costs of searching for and duplicating the records sought, except that the first two hours of manual search time and the first 100 paper pages of reproduction shall be furnished without charge.

(e) For purposes of paragraphs (b) through (d) of this section, whenever it reasonably appears that a requester, or

a group of requesters acting in concert, is attempting to break down a single request into a series of requests relating to the same subject matter for the purpose of evading the assessment of fees, such requests will be aggregated and fees assessed accordingly.

[54 FR 3022, Jan. 23, 1989, as amended at 62 FR 55336, Oct. 24, 1997]

§ 2702.6 Fee schedule.

(a) *Search fee.* The fee for searching for information and records shall be the salary rate (that is, basic pay plus 16%) of the employee making the search. This hourly rate is listed on the Commission's Web site at *http://www.fmshrc.gov*. Fees for searches of computerized records shall be the actual cost to the Commission, but shall not exceed $300 per hour. This fee includes machine time and that of the operator and clerical personnel. If search charges are likely to exceed $50, the requester shall be notified of the estimated amount of fees, unless the requester has indicated in advance his willingness to pay fees as high as those anticipated. Fees may be charged even if the documents are not located or if they are located but withheld on the basis of an exemption.

(b) *Review fee.* The review fee shall be charged for the Chief FOIA Officer's initial examination of documents located in response to a request in order to determine if they may be withheld from disclosure, and for the deletion of portions that are exempt from disclosure, but shall not be charged for review by the Chairman or the Commissioners. See § 2702.3. The review fee is the salary rate (that is, basic pay plus 16%) of the Chief FOIA Officer or the employee designated to perform the review. This hourly rate is listed on the Commission's Web site at *http://www.fmshrc.gov*.

(c) *Duplicating fee.* The copy fee for each page of paper up to 8½″ × 14″ shall be $.15 per copy per page. Any private sector services required, including the fee for copying photographs and nonstandard documents, will be the actual direct cost incurred by the Commission. For copies prepared by computer, such as tapes or printouts, the Commission shall charge the actual cost, including operator time, of production of the tape or printout. For other methods of reproduction or duplication, the Commission will charge the actual direct costs of producing the document(s). If duplication charges are likely to exceed $50, the requester shall be notified of the estimated amount of fees, unless the requester has indicated in advance his willingness to pay fees as high as those anticipated.

[72 FR 71791, Dec. 19, 2007]

§ 2702.7 No fees; waiver or reduction of fees.

(a) No fees shall be charged to any requester, including commercial use requesters, if the anticipated cost of processing and collecting the fee would be equal or greater than the fee itself. Accordingly, the Commission has determined that fees of less than $20 shall be waived.

(b) Documents shall be furnished without any charge, or at a charge reduced below the fees otherwise applicable, if disclosure of the information is determined to be in the public interest because it is likely to contribute significantly to public understanding of the operations or activities of the government and is not primarily in the commercial interest of the requester.

(1) The following six factors will be employed in determining when such fees shall be waived or reduced:

(i) The subject of the request: Whether the subject of the requested records concerns ''the operations or activities of the government'';

(ii) The informative value of the information to be disclosed: Whether the disclosure is ''likely to contribute'' to an understanding of government operations or activities;

(iii) The contribution to an understanding of the subject by the general public likely to result from disclosure: Whether disclosure of the requested information will contribute to ''public understanding'';

(iv) The significance of contribution to public understanding: Whether the disclosure is likely to contribute ''significantly'' to public understanding of government operations or activities;

(v) The existence and magnitude of a commercial interest: Whether the requester has a commercial interest that

would be furthered by the requested disclosure; and, if so

(vi) The primary interest in disclosure: Whether the magnitude of the identified commercial interest of the requester is sufficiently large, in comparison with the public interest in disclosure, that disclosure is ''primarily in the commerical interest of the requester.''

(2) The Chief FOIA Officer, upon request, shall determine whether a waiver or reduction of fees is warranted. Requests shall be made concurrently with requests for information under § 2702.3. In accordance with the procedures set forth in § 2702.3, appeals of adverse decisions may be made to the Commission within 5 working days. Determination of appeals will be made by the Commission within 10 working days of receipt.

[54 FR 3022, Jan. 23, 1989, as amended at 62 FR 55336, Oct. 24, 1997; 72 FR 71791, Dec. 19, 2007]

§ 2702.8 Advance payment of fees; interest; debt collection procedures.

(a) Advance payment of fees generally will not be required. However, an advance payment (before work is commenced or continued on a request) may be required if the charges are likely to exceed $250.

(b) Requesters who have previously failed to pay a fee charged in timely fashion (*i.e.*, within 30 days of the date of billing) may be required first to pay that amount plus any applicable interest (or demonstrate that the fee has been paid) and then make an advance payment of the full amount of the estimated fee before the new or pending request is processed.

(c) Interest charges may be assessed on any unpaid bill starting on the 31st day following the day on which the billing was sent at the rate presecribed in 31 U.S.C. 3717 and will accrue from the date of billing.

(d) The Debt Collection Act of 1982, Pub. L. 97–365, including disclosure to consumer credit reporting agencies and the use of collection agencies will be utilized to encourage payment where appropriate.

[54 FR 3023, Jan. 23, 1989]

PART 2703—EMPLOYEE RESPONSIBILITIES AND CONDUCT

Sec.

2703.1 Cross-reference to employee ethical conduct standards and financial disclosure regulations.
2703.2 Designated agency ethics official and alternate designated agency ethics official.

AUTHORITY: 5 U.S.C. 7301; 5 CFR 2638.202.

SOURCE: 61 FR 39872, July 31, 1996, unless otherwise noted.

§ 2703.1 Cross-reference to employee ethical conduct standards and financial disclosure regulations.

Members and employees of the Federal Mine Safety and Review Commission are subject to the executive branch-wide Standards of Ethical Conduct at 5 CFR part 2635; the Commission's regulations at 5 CFR part 8401, which supplement the executive branch-wide standards; and the executive branch-wide financial disclosure regulations at 5 CFR part 2634.

§ 2703.2 Designated agency ethics official and alternate designated agency ethics official.

The Chairman shall appoint an individual to serve as the designated agency ethics official, and an individual to serve in an acting capacity in the absence of the primary designated agency ethics official (alternate designated agency ethics official), to coordinate and manage the Commission's ethics program.

PART 2704—IMPLEMENTATION OF THE EQUAL ACCESS TO JUSTICE ACT IN COMMISSION PROCEEDINGS

Subpart A—General Provisions

Sec.

2704.100 Purpose of these rules.
2704.101 Definitions.
2704.102 Applicability.
2704.103 Proceedings covered.
2704.104 Eligibility of applicants.
2704.105 Standards for awards.
2704.106 Allowable fees and expenses.
2704.107 Rulemaking on maximum rates for attorney fees.
2704.108 Awards.
2704.109 Delegations of authority.

Subpart B—Information Required From Applicants

2704.201 Contents of application—in general.
2704.202 Contents of application—where the applicant has prevailed.
2704.203 Contents of application—where the Secretary's demand is substantially in excess of the judgment finally obtained and unreasonable.
2704.204 Confidential financial information.
2704.205 Documentation of fees and expenses.
2704.206 When an application may be filed.

Subpart C—Procedures for Considering Applications

2704.301 Filing and service of documents.
2704.302 Answer to application.
2704.303 Reply.
2704.304 Comments by other parties.
2704.305 Settlement.
2704.306 Further proceedings on the application.
2704.307 Decision of administrative law judge.
2704.308 Commission review.
2704.309 Judicial review.
2704.310 Payment of award.

AUTHORITY: (5 U.S.C. 504(c)(1); Pub. L. 99–80, 99 Stat. 183; Pub. L. 104–121, 110 Stat. 862.

SOURCE: 47 FR 10001, Mar. 9, 1982, unless otherwise noted.

Subpart A—General Provisions

§ 2704.100 Purpose of these rules.

The Equal Access to Justice Act, 5 U.S.C. 504, provides for the award of attorney fees and other expenses to eligible individuals and entities who are parties to certain administrative proceedings (called ''adversary adjudications'') before this Commission. An eligible party may receive an award when it prevails over the U.S. Department of Labor, Mine Safety and Health Administration (''MSHA''), unless the Secretary of Labor's position in the proceeding was substantially justified or special circumstances make an award unjust. In addition to the foregoing ground of recovery, a non-prevailing eligible party may receive an award if the demand of the Secretary is substantially in excess of the decision of the Commission and unreasonable, unless the applicant party has committed a willful violation of law or otherwise acted in bad faith, or special circumstances make an award unjust. The rules in this part describe the parties eligible for each type of award. They also explain how to apply for awards, and the procedures and standards that this Commission will use to make the awards. In addition to the rules in this part, the Commission's general rules of procedure, part 2700 of this chapter, apply where appropriate.

[71 FR 44209, Aug. 4, 2006]

§ 2704.101 Definitions.

The following terms shall have the following meaning when used in these rules:

Adjudication Officer, as defined in 5 U.S.C. 504(b)(1)(D), means the Commission's administrative law judge who presided at the underlying adversary adjudication between the applicant and the Secretary of Labor. For the sake of clarity, references hereafter shall be to ''administrative law judge''.

The Act means the Equal Access to Justice Act 5 U.S.C. 504;

The Commission means the Federal Mine Safety and Health Review Commission, created as an independent agency under 30 U.S.C. 823;

The Mine Act means the Federal Mine Safety and Health Act of 1977, 30 U.S.C. 801 *et seq*;

The Secretary means the Secretary of Labor or his designee.

§ 2704.102 Applicability.

Section 2704.105(a) applies to adversary adjudications before the Commission pending or commenced on or after August 5, 1984. Section 2704.105(b) applies to adversary adjudications commenced on or after March 29, 1996.

[63 FR 63175, Nov. 12, 1998]

§ 2704.103 Proceedings covered.

(a) The Act applies to adversary adjudications conducted by this Commission. These are adjudications before the Commission arising under the Mine Act in which the position of the Secretary of Labor is represented by an attorney or other representative who enters an appearance and participates in the proceeding. For this Commission, the types of proceedings generally covered include:

(1) Contests of citations or orders issued under section 104 or 107 of the Mine Act (30 U.S.C. 814, 817);

(2) Contests of penalties proposed under section 105 (a) and (b) of the Mine Act (30 U.S.C. 815(a), (b));

(3) Challenges to claims of discrimination under section 105(c) of the Mine Act (30 U.S.C. 815(c)) where the Secretary of Labor represents the miner.

(b) The Commission may also designate a proceeding not listed in paragraph (a) of this section as an adversary adjudication for purposes of the Act by so stating in an order initiating the proceeding or designating the matter for hearing. The Commission's failure to designate a proceeding as an adversary adjudication shall not preclude the filing of an application by a party who believes the proceeding is covered by the Act; whether the proceeding is covered will then be an issue for resolution in proceedings on the application.

(c) If a proceeding includes both matters covered by the Act and matters specifically excluded from coverage, any award made will include only fees and expenses related to covered issues.

[47 FR 1001, Mar. 9, 1982, as amended at 71 FR 54905, Sept. 20, 2006]

§ 2704.104 Eligibility of applicants.

(a) To be eligible for an award of attorney fees and other expenses under the Act, the applicant must be a party to the adversary adjudication for which it seeks an award. The term ''party'' is defined in 5 U.S.C. 551(3). The applicant must show that it satisfies the conditions of eligibility set out in this subpart and in subpart B.

(b) For purposes of awards under § 2704.105(a) for prevailing parties:

(1) The employees of an applicant include all persons who regularly perform services for remuneration for the applicant, under the applicant's direction and control. Part-time employees shall be included on a proportional basis.

(2) An applicant who owns an unincorporated business will be considered as an ''individual'' rather than a ''sole owner of an unincorporated business'' if the issues on which the applicant prevails are related primarily to personal interests rather than to business interests.

(3) The types of eligible applicants are as follows:

(i) An individual with a net worth of not more than $2 million;

(ii) The sole owner of an unincorporated business who has a net worth of not more than $7 million, including both personal and business interests, and employs not more than 500 employees;

(iii) Any other partnership, corporation, association, unit of local government, or public or private organization with a net worth of not more than $7 million and not more than 500 employees.

(c) For the purposes of awards for non-prevailing parties under § 2704.105(b), eligible applicants are small entities as defined in 5 U.S.C. 601, subject to the annual-receipts and number-of-employees standards as set forth by the Small Business Administration at 13 CFR part 121.

(d) For the purpose of eligibility, the net worth, number of employees, or annual receipts of an applicant, as applicable, shall be determined as of the date the underlying proceeding was initiated under the Mine Act.

(e) An applicant that participates in a proceeding primarily on behalf of one or more other persons or entities that would be ineligible is not itself eligible for an award.

[47 FR 10001, Mar. 9, 1982, as amended at 54 FR 6285, Feb. 9, 1989, 63 FR 63175, Nov. 12, 1998; 71 FR 44210; Aug. 4, 2006; 71 FR 54905, Sept. 20, 2006]

§ 2704.105 Standards for awards.

(a) A prevailing applicant may receive an award of fees and expenses incurred in connection with a proceeding, or in a significant and discrete substantive portion of the proceeding, unless the position of the Secretary was substantially justified. The position of the Secretary includes, in addition to the position taken by the Secretary in the adversary adjudication, the action or failure to act by the Secretary upon which the adversary adjudication is based. The burden of proof that an award should not be made to a prevailing applicant because the Secretary's position was substantially justified is on the Secretary, who may

avoid an award by showing that his position was reasonable in law and fact. An award will be reduced or denied if the applicant has unduly or unreasonably protracted the underlying proceeding or if special circumstances make the award unjust.

(b) If the demand of the Secretary is substantially in excess of the decision of the Commission and is unreasonable when compared with such decision, under the facts and circumstances of the case, the Commission shall award to an eligible applicant who does not prevail the fees and expenses related to defending against the excessive demand, unless the applicant has committed a willful violation of law or otherwise acted in bad faith or special circumstances make an award unjust. The burden of proof is on the applicant to establish that the Secretary's demand is substantially in excess of the Commission's decision; the Secretary may avoid an award by establishing that the demand is not unreasonable when compared to that decision. As used in this section, ''demand'' means the express demand of the Secretary which led to the adversary adjudication, but does not include a recitation by the Secretary of the maximum statutory penalty—

(1) In the administrative complaint, or

(2) Elsewhere when accompanied by an express demand for a lesser amount.

[63 FR 63176, Nov. 12, 1998, as amended at 71 FR 44210, Aug. 4, 2006]

§ 2704.106 Allowable fees and expenses.

(a) Awards will be based on rates customarily charged by persons engaged in the business of or acting as attorneys, agents and expert witnesses, even if the services were made available without charge or at a reduced rate to the applicant.

(b) No award for the fee of an attorney or agent under this part may exceed $125 per hour, except as provided in § 2704.107. No award to compensate an expert witness may exceed the highest rate at which the Secretary of Labor pays expert witnesses. However, an award may also include the reasonable expenses of the attorney, agent, or witness as a separate item if the attorney, agent or witness ordinarily charges clients separately for such expenses.

(c) In determining the reasonableness of the fee sought for an attorney, agent or expert witness, the administrative law judge shall consider the following:

(1) If the attorney, agent or witness is in private practice, his or her customary fee for similar services, or, if an employee of the applicant, the fully allocated cost of the services;

(2) The prevailing rate for similar services in the community in which the attorney, agent or witness ordinarily performs services;

(3) The time actually spent in the representation of the applicant;

(4) The time reasonably spent in light of the difficulty or complexity of the issues in the underlying proceeding; and

(5) Such other factors as may bear on the value of the services provided.

(d) The reasonable cost of any study, analysis, engineering report, test, project or similar matter prepared on behalf of a party may be awarded, to the extent that the charge for the service does not exceed the prevailing rate for similar services, and the study or other matter was necessary for preparation of the applicant's case in the underlying proceeding.

[47 FR 10001, Mar. 9, 1982, as amended at 63 FR 63176, Nov. 12, 1998; 71 FR 54905, Sept. 20, 2006]

§ 2704.107 Rulemaking on maximum rates for attorney's fees.

(a) If warranted by an increase in the cost of living or by special circumstances (such as limited availability of attorneys qualified to handle certain types of proceedings), attorney's fees may be awarded at a rate higher than $125 per hour. Any such increase in the rate for attorney's fees will be made only upon a petition submitted by the applicant, pursuant to § 2704.201, and only if the administrative law judge determines, in his or her discretion, that it is justified. Any such adjustment in fees is subject to Commission review as specified in § 2704.308.

(b) Any person may file with the Commission a petition for rulemaking

to increase the maximum rate for attorney fees. The petition should identify the rate the petitioner believes the Commission should establish and the types of proceedings in which the rate should be used. It should also explain fully the reasons why the higher rate is warranted. The Commission will respond to the petition within 60 days after it is filed, by initiating an informal rulemaking proceeding, denying the petition, or taking other appropriate action.

[47 FR 10001, Mar. 9, 1982, as amended at 63 FR 63176, Nov. 12, 1998]

§ 2704.108 Awards.

If an applicant is entitled to an award under § 2704.105(a) or (b), the award shall be made by the Commission against the Department of Labor.

[63 FR 53176, Nov. 12, 1998]

§ 2704.109 Delegations of authority.

The Commission retains authority to take final action on matters pertaining to the Equal Access to Justice Act in actions arising under the Mine Act. The Commission may, however, by order delegate authority to take final action on matters pertaining to the Equal Access to Justice Act in particular cases to other subordinate officials or bodies.

Subpart B—Information Required From Applicants

SOURCE: 63 FR 63176, Nov. 12, 1998, unless otherwise noted.

§ 2704.201 Contents of application—in general.

(a) An application for an award of fees and expenses under the Act shall be made to the Chief Administrative Law Judge of the Commission at 1331 Pennsylvania Avenue NW., Suite 520N, Washington, DC 20004–1710. The application shall identify the applicant and the underlying proceeding for which an award is sought.

(b) The application shall state the amount of fees and expenses for which an award is sought. The application may also include a request that attorney's fees be awarded at a rate higher than $125 per hour because of an increase in the cost of living or other special factors.

(c) The application may also include any other matters that the applicant wishes the Commission to consider in determining whether and in what amount an award should be made.

(d) The application should be signed by the applicant or an authorized officer or attorney of the applicant. It shall also contain or be accompanied by a written verification under oath or under penalty of perjury that the information provided in the application is true and correct.

(e) Upon receipt of an application, the Chief Administrative Law Judge shall immediately assign it for disposition to the administrative law judge who presided over the underlying Mine Act proceeding.

[63 FR 63176, Nov. 12, 1998, as amended at 67 FR 60863, Sept. 27, 2002; 77 FR 48430, Aug. 14, 2012]

§ 2704.202 Contents of application—where the applicant has prevailed.

(a) An application for an award under § 2704.105(a) shall show that the applicant has prevailed in a significant and discrete substantive portion of the underlying proceeding and identify the position of the Department of Labor in the proceeding that the applicant alleges was not substantially justified. Unless the applicant is an individual, the application shall also state the number of employees of the applicant and describe briefly the type and purpose of its organization or business.

(b) The application also shall include a statement that the applicant's net worth does not exceed $2 million (if an individual) or $7 million (for all other applicants).

(c) Each applicant must provide with its application a detailed exhibit showing the net worth of the applicant when the underlying proceeding was initiated. The exhibit may be in any form convenient to the applicant that provides full disclosure of the applicant's assets and liabilities and is sufficient to determine whether the applicant qualifies under the standards in this part. The administrative law judge

may require an applicant to file additional information to determine its eligibility for an award.

[63 FR 63176, Nov. 12, 1998, as amended at 71 FR 54905, Sept. 20, 2006]

§ 2704.203 Contents of application—where the Secretary's demand is substantially in excess of the judgment finally obtained and unreasonable.

(a) An application for an award under § 2704.105(b) shall show that the Secretary's demand is substantially in excess of the decision of the Commission; the application shall further allege that the Secretary's demand is unreasonable when compared with the Commission's decision.

(b) The application shall show that the applicant is a small entity as defined in 5 U.S.C. 601(6), and the application must conform to the standards of the Small Business Administration at 13 CFR 121.201 for mining entities. The application shall include a statement of the applicant's annual receipts or number of employees, as applicable, in conformance with the requirements of 13 CFR 121.104 and 121.106. The application shall describe briefly the type and purpose of its organization or business.

§ 2704.204 Confidential financial information.

Ordinarily, the net-worth and annual-receipts exhibits will be included in the public record of the proceeding. However, an applicant that objects to public disclosure of information in any portion of such exhibits and believes there are legal grounds for withholding the information from disclosure may submit that portion of the exhibit directly to the administrative law judge in a sealed envelope labeled ''Confidential Financial Information,'' accompanied by a motion to withhold the information from public disclosure. The motion shall describe the information sought to be withheld and explain, in detail, why it falls within one or more of the specific exemptions from mandatory disclosure under the Freedom of Information Act, 5 U.S.C. 552(b)(1)–(9), why public disclosure of the information would adversely affect the applicant, and why disclosure is not required in the public interest. The material in question shall be served on counsel representing the Secretary of Labor against whom the applicant seeks an award, but need not be served on any other party to the proceeding. If the administrative law judge finds that the information should not be withheld from disclosure, it shall be placed in the public record of the proceeding. Otherwise, any request to inspect or copy the exhibit shall be disposed of in accordance with the established procedures under the Freedom of Information Act (29 CFR part 2702).

§ 2704.205 Documentation of fees and expenses.

The application shall be accompanied by full documentation of the fees and expenses, including the cost of any study, analysis, engineering report, test, project or similar matter, for which an award is sought. A separate itemized statement shall be submitted for each professional firm or individual whose services are covered by the application, showing the hours spent in connection with the underlying proceeding by each individual, a description of the specific services performed, the rate at which each fee has been computed, any expenses for which reimbursement is sought, the total amount claimed, and the total amount paid or payable by the applicant or by any other person or entity for the services provided. The administrative law judge may require the applicant to provide vouchers, receipts, or other substantiation for any expenses claimed.

§ 2704.206 When an application may be filed.

(a) An application may be filed whenever the applicant has prevailed in the underlying proceeding or in a significant and discrete substantive portion of that proceeding. An application may also be filed by a non-prevailing party when a demand by the Secretary is substantially in excess of the decision of the Commission and is unreasonable when compared with such decision. In no case may an application be filed later than 30 days after the Commission's final disposition of the underlying proceeding, or 30 days after issuance of a court judgment that is

final and nonappealable in any Commission adjudication that has been appealed pursuant to section 106 of the Mine Act, 30 U.S.C. 816.

(b) If review or reconsideration is sought or taken of a decision on the merits as to which an applicant has prevailed or has been subjected to a demand from the Secretary substantially in excess of the decision of the Commission and unreasonable when compared to that decision, proceedings for the award of fees shall be stayed pending final disposition of the underlying controversy.

(c) For purposes of this part, final disposition before the Commission means the date on which a decision or order disposing of the merits of the proceeding or any other complete resolution of the proceeding, such as a settlement or voluntary dismissal, becomes final (pursuant to sections 105(d) and 113(d) of the Mine Act (30 U.S.C. 815(d) and 823(d)) and unappealable, both within the Commission and to the courts (pursuant to section 106(a) of the Mine Act (30 U.S.C. 816(a)).

[63 FR 63176, Nov. 12, 1998, as amended at 71 FR 44210, Aug. 4, 2006]

Subpart C—Procedures for Considering Applications

§ 2704.301 Filing and service of documents.

Any application for an award or other pleading or other document related to an application, including a petition for discretionary review, shall be filed and served on all parties in the same manner as pleadings in the underlying proceeding, except as provided in § 2704.202(b) for confidential financial information.

§ 2704.302 Answer to application.

(a) Within 30 days after service of an application, counsel representing the Secretary of Labor may file an answer to the application. Unless counsel requests an extension of time for filing, files a statement of intent to negotiate under paragraph (b), or a proceeding is stayed pursuant to § 206(b), failure to file an answer within the 30-day period may be treated as a consent to the award requested.

(b) If counsel for the Secretary and the applicant believe that the issues in the fee application can be settled, they may jointly file a statement of their intent to negotiate a settlement. The filing of this statement shall extend the time for filing an answer for an additional 30 days, and further extensions may be granted by the administrative law judge upon request by counsel for the Secretary and the applicant.

(c) The answer shall explain in detail any objections to the award requested and identify the facts relied on in support of the position of the Secretary of Labor. If the answer is based on any alleged facts not already in the record of the underlying proceeding, counsel shall include with the answer either supporting affidavits or a request for further proceedings under § 2704.306 of this part.

[63 FR 63176, Nov. 12, 1998, as amended at 71 FR 44210, Aug. 4, 2006]

§ 2704.303 Reply.

Within 15 days after service of an answer, the applicant may file a reply. If the reply is based on any alleged facts not already in the record of the proceeding, the applicant shall include with the reply either supporting affidavits or a request for further proceedings under § 2704.306 of this part.

§ 2704.304 Comments by other parties.

Any party to a proceeding other than the applicant and counsel for the Secretary of Labor may file comments on an application within 30 days after it is served or on an answer within 15 days after it is served. A commenting party may not participate further in proceedings on the application unless the administrative law judge determines that the public interest requires such participation in order to permit full exploration of matters raised in the comments.

§ 2704.305 Settlement.

In the event that counsel for the Secretary and an applicant agree to settle an EAJA claim after an application has been filed with the Commission, the

applicant shall timely notify the Commission of the settlement and request dismissal of the application.

[63 FR 63177, Nov. 12, 1998]

§ 2704.306 Further proceedings on the application.

(a) The determination of an award will be made on the basis of the record made during the proceeding for which fees and expenses are sought, except as provided in paragraphs (b) and (c) of this section.

(b) On request of either the applicant or the Secretary, or on the administrative law judge's own initiative, the judge may order further proceedings, such as an informal conference, oral argument, additional written submissions or, as to issues other than substantial justification (such as the applicant's eligibility or substantiation of fees and expenses), pertinent discovery or an evidentiary hearing. Such further proceedings shall be held only when necessary for full and fair resolution of the issues arising from the application and shall be conducted as promptly as possible.

(c) If the proceeding for which fees and expenses are sought was conceded by the Secretary on the merits, withdrawn by the Secretary, or otherwise settled before any of the merits were heard, the applicant and the Secretary may supplement the administrative record with affidavits or other documentary evidence.

(d) A request that the judge order further proceedings under this section shall specifically identify the information sought on the disputed issues and shall explain why the additional proceedings are necessary to resolve the issues.

[54 FR 6286, Feb. 9, 1989]

§ 2704.307 Decision of administrative law judge.

The administrative law judge shall issue an initial decision on the application within 75 days after completion of proceedings on the application. In all decisions on applications, the administrative law judge shall include written findings and conclusions on the applicant's eligibility, and an explanation of the reasons for any difference between the amount requested and the amount awarded. As to applications filed pursuant to § 2704.105(a), the administrative law judge shall also include findings on the applicant's status as a prevailing party and whether the position of the Secretary was substantially justified; if at issue, the judge shall also make findings on whether the applicant unduly protracted or delayed the underlying proceeding or whether special circumstances make the award unjust. As to applications filed pursuant to § 2704.105(b), the administrative law judge shall include findings on whether the Secretary made a demand that is substantially in excess of the decision of the Commission and unreasonable when compared with that decision; if at issue, the judge shall also make findings on whether the applicant has committed a willful violation of the law or otherwise acted in bad faith or whether special circumstances make the award unjust. Under either paragraph, the decision shall include, if at issue, detailed findings and conclusions on whether an increase in the cost of living or any other special factor justifies a higher fee than the $125 per hour fee set forth in the statute. The initial decision by the administrative law judge shall become final 40 days after its issuance unless review by the Commission is ordered under § 2704.308 of this part.

[63 FR 63177, Nov. 12, 1998]

§ 2704.308 Commission review.

(a) Either the applicant or the Secretary of Labor may seek review by the Commission of the initial decision by the administrative law judge, but review shall be discretionary with the Commission.

(b) The party seeking review shall file a petition for discretionary review so as to be received by the Commission at 1331 Pennsylvania Avenue NW., Suite 520N, Washington, DC 20004–1710 within 30 days of the issuance of the initial decision by the administrative law judge. Each issue in dispute shall be plainly and concisely stated, with supporting reasons set forth. Except for good cause shown, no issue not raised before the administrative law judge shall be set forth in the petition for discretionary review. Review by the

Commission shall be granted only by affirmative vote of two of the Commissioners within 40 days of the issuance of the initial opinion, except that within 30 days after the issuance of the initial decision by the administrative law judge, two or more Commissioners may in their discretion order the case for review without the filing of a petition. The latter procedure shall be reserved for novel questions of law or policy, however.

(c) If review of the initial decision of the administrative law judge is granted by the Commission, the Commission shall, after allowing opportunity for presentation of views by opposing parties, review the case and issue its own order affirming, modifying or vacating in whole or in part the initial decision or directing other appropriate relief.

[47 FR 10001, Mar. 9, 1982, as amended at 63 FR 63178, Nov. 12, 1998; 67 FR 60863, Sept. 27, 2002; 77 FR 48430, Aug. 14, 2012]

§ 2704.309 Judicial review.

Judicial review of final Commission decisions on awards may be sought as provided in 5 U.S.C. 504(c)(2).

§ 2704.310 Payment of award.

Payment of awards made under the Equal Access to Justice Act by final orders of the Commission or its administrative law judge shall be in accordance with the applicable rules of the Department of Labor.

PART 2705—PRIVACY ACT IMPLEMENTATION

Sec.

2705.1 Purpose and scope.
2705.2 Definitions.
2705.3 Procedure for requests pertaining to individuals' records in a records system.
2705.4 Times, places, and requirements for the identification of the individual making a request.
2705.5 Access to requested information to the individual.
2705.6 Request for correction or amendment to the record.
2705.7 Agency review of request for correction or amendment of the record.
2705.8 Appeal of an initial adverse Commission determination on correction or amendment of the record.
2705.9 Disclosure of record to a person other than the individual to whom the record pertains.
2705.10 Fees.

AUTHORITY: 5 U.S.C. 552a; Pub. L. 93–579.

SOURCE: 49 FR 38542, Oct. 1, 1984, unless otherwise noted.

§ 2705.1 Purpose and scope.

The purposes of these regulations are to:

(a) Establish a procedure by which an individual can determine if the Federal Mine Safety and Health Review Commission, hereafter the ''Commission,'' maintains a system of records which includes a record pertaining to the individual. This does not include Commission files generated in adversary proceedings under the Federal Mine Safety and Health Act; and

(b) Establish a procedure by which an individual can gain access to a record pertaining to him or her for the purpose of review, amendment and/or correction.

[49 FR 38542, Oct. 1, 1984, as amended at 71 FR 44210, Aug. 4, 2006]

§ 2705.2 Definitions.

For the purpose of these regulations—

(a) The term *individual* means a citizen of the United States or an alien lawfully admitted for permanent residence;

(b) The term *maintain* includes maintain, collect, use of disseminate;

(c) The term *record* means any item, collection or grouping of information about an individual that is maintained by the Commission, including, but not limited to, his or her employment history, payroll information, and financial transactions and that contains his or her name, or the identifying number, symbol, or other identifying particular assigned to the individual, such as social security number;

(d) The term *system of records* means a group of any records under control of the Commission from which information is retrieved by the name of the individual or by some identifying number, symbol, or other identifying particular assigned to the individual; and

(e) The term *routine use* means, with respect to the disclosure of a record, the use of such record for a purpose

which is compatible with the purpose for which it was collected.

[49 FR 38542, Oct. 1, 1984, as amended at 71 FR 54905, Sept. 20, 2006]

§ 2705.3 Procedure for requests pertaining to individuals' records in a records system.

An individual shall submit a request to the Executive Director to determine if a system of records named by the individual contains a record pertaining to the individual. If a record pertaining to the individual does exist in the specified system of records and the individual wishes to review that record he or she shall submit a request to the Executive Director of the Commission which states the individual's desire to review his or her record.

§ 2705.4 Times, places, and requirements for the identification of the individual making a request.

An individual making a request to the Executive Director of the Commission pursuant to § 2705.3 shall present a written request at the Commission Office, 1331 Pennsylvania Avenue NW., Suite 520N, Washington, DC 20004–1710, on any business day between the hour of 8:30 a.m. and 5:00 p.m. The individual submitting the request should present himself or herself at the Commission's offices with a form of identification which will permit the Commission to verify that the individual is the same individual as contained in the record requested.

[49 FR 38542, Oct. 1, 1984, as amended at 67 FR 60863, Sept. 27, 2002; 77 FR 48430, Aug. 14, 2012]

§ 2705.5 Access to requested information to the individual.

As soon as practicable after verification of identity the Commission shall disclose to the individual the information contained in the record which pertains to that individual.

§ 2705.6 Request for correction or amendment to the record.

The individual shall submit a written request to the Executive Director which states the individual's desire to correct or to amend his or her record and details the specific corrections or amendments sought. This request is to be made in accord with provisions of § 2705.4.

§ 2705.7 Agency review of request for correction or amendment of the record.

Within ten working days of the receipt of the request to correct or to amend the record, the Executive Director will acknowledge in writing such receipt and promptly either—

(a) Make any correction or amendment to that portion of the record which the individual believes is not accurate, relevant, timely, or complete; or

(b) Inform the individual of the Executive Director's refusal to correct or to amend the record in accordance with the request, and the procedures established by the Commission for the individual to request a review of that refusal.

§ 2705.8 Appeal of an initial adverse Commission determination on correction or amendment of the record.

An individual who disagrees with the refusal of the Executive Director to correct or to amend his or her record may submit a request for a review of such refusal to the Chairman, Federal Mine Safety and Health Review Commission, 1331 Pennsylvania Avenue NW., Suite 520N, Washington, DC 20004–1710. The Chairman will, not later than thirty working days from the date on which the individual requests such review, complete such review and make final determination unless, for good cause shown, the Chairman extends such thirty-day period. If, after his or her review, the Chairman also refuses to correct or to amend the record in accordance with the request, the Individual may file with the Commission a concise statement setting forth the reasons for his or her disagreement with the refusal of the Commission and may seek judicial review of the Chairman's determination under 5 U.S.C. 552a(g)(1)(A).

[49 FR 38542, Oct. 1, 1984, as amended at 67 FR 60863, Sept. 27, 2002; 77 FR 48430, Aug. 14, 2012]

§ 2705.9 Disclosure of record to a person other than the individual to whom the record pertains.

The Commission will not disclose a record to any individual other than the individual to whom the record pertains without receiving the prior written consent of the individual to whom the record pertains, unless the disclosure has been listed as a ''routine use'' in the Commission's notices of its system of records, or falls within one of the special disclosure situations listed in the Privacy Act of 1974 (5 U.S.C. 552a(b)).

§ 2705.10 Fees.

If an individual requests copies of his or her record, he or she will be charged a reasonable fee, excluding the cost of any search for review of the record, in advance of receipt of the pages.

PART 2706—ENFORCEMENT OF NONDISCRIMINATION ON THE BASIS OF HANDICAP IN PROGRAMS OR ACTIVITIES CONDUCTED BY THE FEDERAL MINE SAFETY AND HEALTH REVIEW COMMISSION

Sec.

2706.101 Purpose.
2706.102 Application.
2706.103 Definitions.
2706.104–2706.109 [Reserved]
2706.110 Self-evaluation.
2706.111 Notice.
2706.112–2706.129 [Reserved]
2706.130 General prohibitions against discrimination.
2706.131–2706.139 [Reserved]
2706.140 Employment.
2706.141–2706.148 [Reserved]
2706.149 Program accessibility: Discrimination prohibited.
2706.150 Program accessibility: Existing facilities.
2706.151 Program accessibility: New construction and alterations.
2706.152–2706.159 [Reserved]
2706.160 Communications.
2706.161–2706.169 [Reserved]
2706.170 Compliance procedures.
2706.171–2706.999 [Reserved]

AUTHORITY: 29 U.S.C. 794.

SOURCE: 51 FR 22893, 22896, June 23, 1986, unless otherwise noted.

§ 2706.101 Purpose.

This part effectuates section 119 of the Rehabilitation, Comprehensive Services, and Developmental Disabilities Amendments of 1978, which amended section 504 of the Rehabilitation Act of 1973 to prohibit discrimination on the basis of handicap in programs or activities conducted by Executive agencies or the United States Postal Service.

§ 2706.102 Application.

This part applies to all programs or activities conducted by the agency.

§ 2706.103 Definitions.

For purposes of this part, the term—

Assistant Attorney General means the Assistant Attorney General, Civil Rights Division, United States Department of Justice.

Auxiliary aids means services or devices that enable persons with impaired sensory, manual, or speaking skills to have an equal opportunity to participate in, and enjoy the benefits of, programs or activities conducted by the agency. For example, auxiliary aids useful for persons with impaired vision include readers, brailled materials, audio recordings, telecommunications devices and other similar services and devices. Auxiliary aids useful for persons with impaired hearing include telephone handset amplifiers, telephones compatible with hearing aids, telecommunication devices for deaf persons (TDD's), interpreters, notetakers, written materials, and other similar services and devices.

Complete complaint means a written statement that contains the complainant's name and address and describes the agency's alleged discriminatory action in sufficient detail to inform the agency of the nature and date of the alleged violation of section 504. It shall be signed by the complainant or by someone authorized to do so on his or her behalf. Complaints filed on behalf of classes or third parties shall describe or identify (by name, if possible) the alleged victims of discrimination.

Facility means all or any portion of buildings, structures, equipment, roads, walks, parking lots, rolling stock or other conveyances, or other real or personal property.

Handicapped person means any person who has a physical or mental impairment that substantially limits one or more major life activities, has a record of such an impairment, or is regarded as having such an impairment.

As used in this definition, the phrase:

(1) *Physical or mental impairment* includes—

(i) Any physiological disorder or condition, cosmetic disfigurement, or anatomical loss affecting one or more of the following body systems: Neurological; musculoskeletal; special sense organs; respiratory, including speech organs; cardiovascular; reproductive; digestive; genitourinary; hemic and lymphatic; skin; and endocrine; or

(ii) Any mental or psychological disorder, such as mental retardation, organic brain syndrome, emotional or mental illness, and specific learning disabilities. The term ''physical or mental impairment'' includes, but is not limited to, such diseases and conditions as orthopedic, visual, speech, and hearing impairments, cerebral palsy, epilepsy, muscular dystrophy, multiple sclerosis, cancer, heart disease, diabetes, mental retardation, emotional illness, and drug addiction and alcoholism.

(2) *Major life activities* includes functions such as caring for one's self, performing manual tasks, walking, seeing, hearing, speaking, breathing, learning, and working.

(3) *Has a record of such an impairment* means has a history of, or has been misclassified as having, a mental or physical impairment that substantially limits one or more major life activities.

(4) *Is regarded as having an impairment* means—

(i) Has a physical or mental impairment that does not substantially limit major life activities but is treated by the agency as constituting such a limitation;

(ii) Has a physical or mental impairment that substantially limits major life activities only as a result of the attitudes of others toward such impairment; or

(iii) Has none of the impairments defined in subparagraph (1) of this definition but is treated by the agency as having such an impairment.

Historic preservation programs means programs conducted by the agency that have preservation of historic properties as a primary purpose.

Historic properties means those properties that are listed or eligible for listing in the National Register of Historic Places or properties designated as historic under a statute of the appropriate State or local government body.

Qualified handicapped person means—

(1) With respect to preschool, elementary, or secondary education services provided by the agency, a handicapped person who is a member of a class of persons otherwise entitled by statute, regulation, or agency policy to receive education services from the agency.

(2) With respect to any other agency program or activity under which a person is required to perform services or to achieve a level of accomplishment, a handicapped person who meets the essential eligibility requirements and who can acheive the purpose of the program or activity without modifications in the program or activity that the agency can demonstrate would result in a fundamental alteration in its nature;

(3) With respect to any other program or activity, a handicapped person who meets the essential eligibility requirements for participation in, or receipt of benefits from, that program or activity; and

(4) *Qualified handicapped person* is defined for purposes of employment in 29 CFR 1613.702(f), which is made applicable to this part by § 2706.140.

Section 504 means section 504 of the Rehabilitation Act of 1973 (Pub. L. 93–112, 87 Stat. 394 (29 U.S.C. 794)), as amended by the Rehabilitation Act Amendments of 1974 (Pub. L. 93–516, 88 Stat. 1617), and the Rehabilitation, Comprehensive Services, and Developmental Disabilities Amendments of 1978 (Pub. L. 95–602, 92 Stat. 2955). As used in this part, section 504 applies only to programs or activities conducted by Executive agencies and not to federally assisted programs.

Substantial impairment means a significant loss of the integrity of finished materials, design quality, or special character resulting from a permanent alteration.

§§ 2706.104–2706.109 [Reserved]

§ 2706.110 Self-evaluation.

(a) The agency shall, by August 24, 1987, evaluate its current policies and practices, and the effects thereof, that do not or may not meet the requirements of this part, and, to the extent modification of any such policies and practices is required, the agency shall proceed to make the necessary modifications.

(b) The agency shall provide an opportunity to interested persons, including handicapped persons or organizations representing handicapped persons, to participate in the self-evaluation process by submitting comments (both oral and written).

(c) The agency shall, until three years following the completion of the self-evaluation, maintain on file and make available for public inspection:

(1) A description of areas examined and any problems identified, and

(2) A description of any modifications made.

§ 2706.111 Notice.

The agency shall make available to employees, applicants, participants, beneficiaries, and other interested persons such information regarding the provisions of this part and its applicability to the programs or activities conducted by the agency, and make such information available to them in such manner as the head of the agency finds necessary to apprise such persons of the protections against discrimination assured them by section 504 and this regulation.

§§ 2706.112–2706.129 [Reserved]

§ 2706.130 General prohibitions against discrimination.

(a) No qualified handicapped person shall, on the basis of handicap, be excluded from participation in, be denied the benefits of, or otherwise be subjected to discrimination under any program or activity conducted by the agency.

(b)(1) The agency, in providing any aid, benefit, or service, may not, directly or through contractual, licensing, or other arrangements, on the basis of handicap—

(i) Deny a qualified handicapped person the opportunity to participate in or benefit from the aid, benefit, or service;

(ii) Afford a qualified handicapped person an opportunity to participate in or benefit from the aid, benefit, or service that is not equal to that afforded others;

(iii) Provide a qualified handicapped person with an aid, benefit, or service that is not as effective in affording equal opportunity to obtain the same result, to gain the same benefit, or to reach the same level of achievement as that provided to others;

(iv) Provide different or separate aid, benefits, or services to handicapped persons or to any class of handicapped persons than is provided to others unless such action is necessary to provide qualified handicapped persons with aid, benefits, or services that are as effective as those provided to others;

(v) Deny a qualified handicapped person the opportunity to participate as a member of planning or advisory boards; or

(vi) Otherwise limit a qualified handicapped person in the enjoyment of any right, privilege, advantage, or opportunity enjoyed by others receiving the aid, benefit, or service.

(2) The agency may not deny a qualified handicapped person the opportunity to participate in programs or activities that are not separate or different, despite the existence of permissibly separate or different programs or activities.

(3) The agency may not, directly or through contractual or other arrangments, utilize criteria or methods of administration the purpose or effect of which would—

(i) Subject qualified handicapped persons to discrimination on the basis of handicap; or

(ii) Defeat or substantially impair accomplishment of the objectives of a program or activity with respect to handicapped persons.

(4) The agency may not, in determining the site or location of a facility, make selections the purpose or effect of which would—

(i) Exclude handicapped persons from, deny them the benefits of, or otherwise subject them to discrimination

under any program or activity conducted by the agency; or

(ii) Defeat or substantially impair the accomplishment of the objectives of a program or activity with respect to handicapped persons.

(5) The agency, in the selection of procurement contractors, may not use criteria that subject qualified handicapped persons to discrimination on the basis of handicap.

(6) The agency may not administer a licensing or certification program in a manner that subjects qualified handicapped persons to discrimination on the basis of handicap, nor may the agency establish requirements for the programs or activities of licensees or certified entities that subject qualified handicapped persons to discrimination on the basis of handicap. However, the programs or activities of entities that are licensed or certified by the agency are not, themselves, covered by this part.

(c) The exclusion of nonhandicapped persons from the benefits of a program limited by Federal statute or Executive order to handicapped persons or the exclusion of a specific class of handicapped persons from a program limited by Federal statute or Executive order to a different class of handicapped persons is not prohibited by this part.

(d) The agency shall administer programs and activities in the most integrated setting appropriate to the needs of qualified handicapped persons.

§§ 2706.131–2706.139 [Reserved]

§ 2706.140 Employment.

No qualified handicapped person shall, on the basis of handicap, be subjected to discrimination in employment under any program or activity conducted by the agency. The definitions, requirements, and procedures of section 501 of the Rehabilitation Act of 1973 (29 U.S.C. 791), as established by the Equal Employment Opportunity Commission in 29 CFR part 1613, shall apply to employment in federally conducted programs or activities.

§§ 2706.141–2706.148 [Reserved]

§ 2706.149 Program accessibility: Discrimination prohibited.

Except as otherwise provided in § 2706.150, no qualified handicapped person shall, because the agency's facilities are inaccessible to or unusable by handicapped persons, be denied the benefits of, be excluded from participation in, or otherwise be subjected to discrimination under any program or activity conducted by the agency.

§ 2706.150 Program accessibility: Existing facilities.

(a) *General.* The agency shall operate each program or activity so that the program or activity, when viewed in its entirety, is readily accessible to and usable by handicapped persons. This paragraph does not—

(1) Necessarily require the agency to make each of its existing facilities accessible to and usable by handicapped persons;

(2) In the case of historic preservation programs, require the agency to take any action that would result in a substantial impairment of significant historic features of an historic property; or

(3) Require the agency to take any action that it can demonstrate would result in a fundamental alteration in the nature of a program or activity or in undue financial and administrative burdens. In those circumstances where agency personnel believe that the proposed action would fundamentally alter the program or activity or would result in undue financial and administrative burdens, the agency has the burden of proving that compliance with § 2706.150(a) would result in such alteration or burdens. The decision that compliance would result in such alteration or burdens must be made by the agency head or his or her designee after considering all agency resources available for use in the funding and operation of the conducted program or activity, and must be accompanied by a written statement of the reasons for reaching that conclusion. If an action would result in such an alteration or such burdens, the agency shall take any other action that would not result in such an alteration or such burdens

but would nevertheless ensure that handicapped persons receive the benefits and services of the program or activity.

(b) *Methods*—(1) *General*. The agency may comply with the requirements of this section through such means as redesign of equipment, reassignment of services to accessible buildings, assignment of aides to beneficiaries, home visits, delivery of services at alternate accessible sites, alteration of existing facilities and construction of new facilities, use of accessible rolling stock, or any other methods that result in making its programs or activities readily accessible to and usable by handicapped persons. The agency is not required to make structural changes in existing facilities where other methods are effective in achieving compliance with this section. The agency, in making alterations to existing buildings, shall meet accessibility requirements to the extent compelled by the Architectural Barriers Act of 1968, as amended (42 U.S.C. 4151–4157), and any regulations implementing it. In choosing among available methods for meeting the requirements of this section, the agency shall give priority to those methods that offer programs and activities to qualified handicapped persons in the most integrated setting appropriate.

(2) *Historic preservation programs*. In meeting the requirements of § 2706.150(a) in historic preservation programs, the agency shall give priority to methods that provide physical access to handicapped persons. In cases where a physical alteration to an historic property is not required because of § 2706.150(a)(2) or (a)(3), alternative methods of achieving program accessibility include—

(i) Using audio-visual materials and devices to depict those portions of an historic property that cannot otherwise be made accessible;

(ii) Assigning persons to guide handicapped persons into or through portions of historic properties that cannot otherwise be made accessible; or

(iii) Adopting other innovative methods.

(c) *Time period for compliance*. The agency shall comply with the obligations established under this section by October 21, 1986, except that where structural changes in facilities are undertaken, such changes shall be made by August 22, 1989, but in any event as expeditiously as possible.

(d) *Transition plan*. In the event that structural changes to facilities will be undertaken to achieve program accessibility, the agency shall develop, by February 23, 1987 a transition plan setting forth the steps necessary to complete such changes. The agency shall provide an opportunity to interested persons, including handicapped persons or organizations representing handicapped persons, to participate in the development of the transition plan by submitting comments (both oral and written). A copy of the transition plan shall be made available for public inspection. The plan shall, at a minimum—

(1) Identify physical obstacles in the agency's facilities that limit the accessibility of its programs or activities to handicapped persons;

(2) Describe in detail the methods that will be used to make the facilities accessible;

(3) Specify the schedule for taking the steps necessary to achieve compliance with this section and, if the time period of the transition plan is longer than one year, identify steps that will be taken during each year of the transition period; and

(4) Indicate the official responsible for implementation of the plan.

§ 2706.151 Program accessibility: New construction and alterations.

Each building or part of a building that is constructed or altered by, on behalf of, or for the use of the agency shall be designed, constructed, or altered so as to be readily accessible to and usable by handicapped persons. The definitions, requirements, and standards of the Architectural Barriers Act (42 U.S.C. 4151–4157), as established in 41 CFR 101–19.600 to 101–19.607, apply to buildings covered by this section.

§§ 2706.152–2706.159 [Reserved]

§ 2706.160 Communications.

(a) The agency shall take appropriate steps to ensure effective communication with applicants, participants, personnel of other Federal entities, and members of the public.

(1) The agency shall furnish appropriate auxiliary aids where necessary to afford a handicapped person an equal opportunity to participate in, and enjoy the benefits of, a program or activity conducted by the agency.

(i) In determining what type of auxiliary aid is necessary, the agency shall give primary consideration to the requests of the handicapped person.

(ii) The agency need not provide individually prescribed devices, readers for personal use or study, or other devices of a personal nature.

(2) Where the agency communicates with applicants and beneficiaries by telephone, telecommunication devices for deaf person (TDD's) or equally effective telecommunication systems shall be used.

(b) The agency shall ensure that interested persons, including persons with impaired vision or hearing, can obtain information as to the existence and location of accessible services, activities, and facilities.

(c) The agency shall provide signage at a primary entrance to each of its inaccessible facilities, directing users to a location at which they can obtain information about accessible facilities. The international symbol for accessibility shall be used at each primary entrance of an accessible facility.

(d) This section does not require the agency to take any action that it can demonstrate would result in a fundamental alteration in the nature of a program or activity or in undue financial and adminstrative burdens. In those circumstances where agency personnel believe that the proposed action would fundamentally alter the program or activity or would result in undue financial and administrative burdens, the agency has the burden of proving that compliance with § 2706.160 would result in such alteration or burdens. The decision that compliance would result in such alteration or burdens must be made by the agency head or his or her designee after considering all agency resources available for use in the funding and operation of the conducted program or activity, and must be accompanied by a written statement of the reasons for reaching that conclusion. If an action required to comply with this section would result in such an alteration or such burdens, the agency shall take any other action that would not result in such an alteration or such burdens but would nevertheless ensure that, to the maximum extent possible, handicapped persons receive the benefits and services of the program or activity.

§§ 2706.161–2706.169 [Reserved]

§ 2706.170 Compliance procedures.

(a) Except as provided in paragraph (b) of this section, this section applies to all allegations of discrimination on the basis of handicap in programs or activities conducted by the agency.

(b) The agency shall process complaints alleging violations of section 504 with respect to employment according to the procedures established by the Equal Employment Opportunity Commission in 29 CFR part 1613 pursuant to section 501 of the Rehabilitation Act of 1973 (29 U.S.C. 791).

(c) The General Counsel shall be responsible for coordinating implementation of this section. Complaints may be sent to General Counsel, Federal Mine Safety and Health Review Commission, 1331 Pennsylvania Avenue NW., Suite 520N, Washington, DC 20004–1710

(d) The agency shall accept and investigate all complete complaints for which it has jurisdiction. All complete complaints must be filed within 180 days of the alleged act of discrimination. The agency may extend this time period for good cause.

(e) If the agency receives a complaint over which it does not have jurisdiction, it shall promptly notify the complainant and shall make reasonable efforts to refer the complaint to the appropriate government entity.

(f) The agency shall notify the Architectural and Transportation Barriers Compliance Board upon receipt of any complaint alleging that a building or facility that is subject to the Architectural Barriers Act of 1968, as amended

(42 U.S.C. 4151–4157), or section 502 of the Rehabilitation Act of 1973, as amended (29 U.S.C. 792), is not readily accessible to and usable by handicapped persons.

(g) Within 180 days of the receipt of a complete complaint for which it has jurisdiction, the agency shall notify the complainant of the results of the investigation in a letter containing—

(1) Findings of fact and conclusions of law;

(2) A description of a remedy for each violation found; and

(3) A notice of the right to appeal.

(h) Appeals of the findings of fact and conclusions of law or remedies must be filed by the complainant within 90 days of receipt from the agency of the letter required by § 2706.170(g). The agency may extend this time for good cause.

(i) Timely appeals shall be accepted and processed by the head of the agency.

(j) The head of the agency shall notify the complainant of the results of the appeal within 60 days of the receipt of the request. If the head of the agency determines that additional information is needed from the complainant, he or she shall have 60 days from the date of receipt of the additional information to make his or her determination on the appeal.

(k) The time limits cited in paragraphs (g) and (j) of this section may be extended with the permission of the Assistant Attorney General.

(l) The agency may delegate its authority for conducting complaint investigations to other Federal agencies, except that the authority for making the final determination may not be delegated to another agency.

[51 FR 22893, 22896, June 23, 1986, as amended at 51 FR 22893, June 23, 1986; 67 FR 60863, Sept. 27, 2002; 77 FR 48431, Aug. 14, 2012]

§§ 2706.171–2706.999 [Reserved]

PARTS 2707–2799 [RESERVED]

CHAPTER XL—PENSION BENEFIT GUARANTY CORPORATION

NOTE: PBGC's regulations were substantially reorganized and renumbered effective June 29, 1981 (at 46 FR 32574) and July 1, 1996 (at 61 FR 34002). Distribution and derivation tables showing the changes that occurred as a result of these amendments are available on the PBGC's Web site at *http://www.pbgc.gov*.

SUBCHAPTER A—GENERAL

Part		*Page*
4000	Filing, issuance, computation of time, and record retention	973
4001	Terminology	983
4002	Bylaws of the Pension Benefit Guaranty Corporation	987
4003	Rules for administrative review of agency decisions	990

SUBCHAPTER B—PREMIUMS

4006	Premium rates	998
4007	Payment of premiums	1004

SUBCHAPTER C—CERTAIN REPORTING AND DISCLOSURE REQUIREMENTS

4010	Annual financial and actuarial information reporting	1015

SUBCHAPTER D—COVERAGE AND BENEFITS

4022	Benefits payable in terminated single-employer plans	1027
4022B	Aggregate limits on guaranteed benefits	1070

SUBCHAPTER E—PLAN TERMINATIONS

4041	Termination of single-employer plans	1072
4041A	Termination of multiemployer plans	1093
4042	Single-employer plan termination initiated by PBGC	1098
4043	Reportable events and certain other notification requirements	1100

Part		Page
4044	Allocation of assets in single-employer plans	1116
4047	Restoration of terminating and terminated plans	1139
4050	Missing participants	1141

SUBCHAPTER F—LIABILITY

4061	Amounts payable by the Pension Benefit Guaranty Corporation	1151
4062	Liability for termination of single-employer plans	1151
4063	Withdrawal liability; plans under multiple controlled groups	1156
4064	Liability on termination of single-employer plans under multiple controlled groups	1156

SUBCHAPTER G—ANNUAL REPORTING REQUIREMENTS

4065	Annual report	1157

SUBCHAPTER H—ENFORCEMENT PROVISIONS

4067	Recovery of liability for plan terminations	1158
4068	Lien for liability	1158
4071	Penalties for failure to provide certain notices or other material information	1159

SUBCHAPTER I—WITHDRAWAL LIABILITY FOR MULTIEMPLOYER PLANS

4203	Extension of special withdrawal liability rules	1160
4204	Variances for sale of assets	1161
4206	Adjustment of liability for a withdrawal subsequent to a partial withdrawal	1165
4207	Reduction or waiver of complete withdrawal liability	1168
4208	Reduction or waiver of partial withdrawal liability	1177
4211	Allocating unfunded vested benefits to withdrawing employers	1184
4219	Notice, collection, and redetermination of withdrawal liability	1195
4220	Procedures for PBGC approval of plan amendments	1205
4221	Arbitration of disputes in multiemployer plans	1207

SUBCHAPTER J—INSOLVENCY, REORGANIZATION, TERMINATION, AND OTHER RULES APPLICABLE TO MULTIEMPLOYER PLANS

4231	Mergers and transfers between multiemployer plans	1214
4245	Notice of insolvency	1220
4261	Financial assistance to multiemployer plans	1224

Part *Page*
4281 Duties of plan sponsor following mass withdrawal 1224

SUBCHAPTER K—MULTIEMPLOYER ENFORCEMENT PROVISIONS

4302 Penalties for failure to provide certain multiemployer plan notices 1235

SUBCHAPTER L—INTERNAL AND ADMINISTRATIVE RULES AND PROCEDURES

4901 Examination and copying of Pension Benefit Guaranty Corporation records 1236
4902 Disclosure and amendment of records pertaining to individuals under the Privacy Act 1245
4903 Debt collection 1250
4905 Appearances in certain proceedings 1264
4906 [Reserved]
4907 Enforcement of nondiscrimination on the basis of handicap in programs or activities conducted by the Pension Benefit Guaranty Corporation 1266
4908–4999 [Reserved]

SUBCHAPTER A—GENERAL

PART 4000—FILING, ISSUANCE, COMPUTATION OF TIME, AND RECORD RETENTION

Subpart A—Filing Rules

Sec.
4000.1 What are these filing rules about?
4000.2 What definitions do I need to know for these rules?
4000.3 What methods of filing may I use?
4000.4 Where do I file my submission?
4000.5 Does the PBGC have discretion to waive these filing requirements?

Subpart B—Issuance Rules

4000.11 What are these issuance rules about?
4000.12 What definitions do I need to know for these rules?
4000.13 What methods of issuance may I use?
4000.14 What is the safe-harbor method for providing an issuance by electronic media?
4000.15 Does the PBGC have discretion to waive these issuance requirements?

Subpart C—Determining Filing and Issuance Dates

4000.21 What are these rules for determining the filing or issuance date about?
4000.22 What definitions do I need to know for these rules?
4000.23 When is my submission or issuance treated as filed or issued?
4000.24 What if I mail my submission or issuance using the U.S. Postal Service?
4000.25 What if I use the postal service of a foreign country?
4000.26 What if I use a commercial delivery service?
4000.27 What if I hand deliver my submission or issuance?
4000.28 What if I send a computer disk?
4000.29 What if I use electronic delivery?
4000.30 What if I need to resend my filing or issuance for technical reasons?
4000.31 Is my issuance untimely if I miss a few participants or beneficiaries?
4000.32 Does the PBGC have discretion to waive any requirements under this part?

Subpart D—Computation of Time

4000.41 What are these computation-of-time rules about?
4000.42 What definitions do I need to know for these rules?
4000.43 How do I compute a time period?

Subpart E—Electronic Means of Record Retention

4000.51 What are these record retention rules about?
4000.52 What definitions do I need to know for these rules?
4000.53 May I use electronic media to satisfy PBGC's record retention requirements?
4000.54 May I dispose of original paper records if I keep electronic copies?

AUTHORITY: 29 U.S.C. 1082(f), 1302(b)(3).

SOURCE: 68 FR 61347, Oct. 28, 2003, unless otherwise noted.

Subpart A—Filing Rules

§ 4000.1 What are these filing rules about?

Where a particular regulation calls for their application, the rules in this subpart A of part 4000 tell you what filing methods you may use for any submission (including a payment) to us. They do not cover an issuance from you to anyone other than the PBGC, such as a notice to participants. Also, they do not cover filings with us that are not made under our regulations, such as procurement filings, litigation filings, and applications for employment with us. (Subpart B tells you what methods you may use to issue a notice or otherwise provide information to any person other than us. Subpart C tells you how we determine your filing or issuance date. Subpart D tells you how to compute various periods of time. Subpart E tells you how to maintain required records in electronic form.)

§ 4000.2 What definitions do I need to know for these rules?

You need to know two definitions from § 4001.2 of this chapter: PBGC and person. You also need to know the following definitions:

Filing means any notice, information, or payment that you submit to us under our regulations.

Issuance means any notice or other information you provide to any person other than us under our regulations.

We means the PBGC.

You means the person filing with us.

§ 4000.3 What methods of filing may I use?

(a) *Paper filings.* Except for the filings listed in paragraph (b) of this section, you may file any submission with us by hand, mail, or commercial delivery service.

(b) *Electronic filings.* (1) You must file premium declarations under part 4007 of this chapter electronically in accordance with the instructions on the PBGC's Web site subject to the following provisions:

(i) This electronic filing requirement does not apply to premium information to the extent that the PBGC grants an exemption for good cause in appropriate circumstances.

(ii) This electronic filing requirement does not apply to premium payments except to the extent that the PBGC so provides in the instructions on the PBGC's Web site.

(iii) This electronic filing requirement does not apply to information you file to comply with a request we make under § 4007.10(c) of this chapter (dealing with providing record information in connection with a premium compliance review).

(2) You must submit the information required under part 4010 of this chapter electronically in accordance with the instructions on the PBGC's Web site, except as otherwise provided by the PBGC.

(c) *Information on how to file.* Current information on how to file, including permitted filing methods, fax numbers, and mail and e-mail addresses, is—

(1) On our Web site, *http://www.pbgc.gov;*

(2) In our various printed forms and instructions packages; and

(3) Available by contacting our Customer Service Center at 1200 K Street, NW., Washington, DC, 20005–4026; telephone 1–800–400–7242 (for participants), or 1–800–736–2444 (for practitioners). (TTY/TDD users may call the Federal relay service toll-free at 1–800–877–8339 and ask to be connected to the appropriate number.)

[70 FR 11543, Mar. 9, 2005, as amended at 71 FR 31080, June 1, 2006; 79 FR 13559, Mar. 11, 2014]

§ 4000.4 Where do I file my submission?

To find out where to send your submission, visit our Web site at *http://www.pbgc.gov*, see the instructions to our forms, or call our Customer Service Center (1–800–400–7242 for participants, or 1–800–736–2444 for practitioners; TTY/TDD users may call the Federal relay service toll-free at 1–800–877–8339 and ask to be connected to the appropriate number.) Because we have different addresses for different types of filings, you should make sure to use the appropriate address for your type of filing. For example, some filings (such as premium payments) must be sent to a specified bank, while other filings (such as the Standard Termination Notice (Form 500)) must be sent to the appropriate department at our offices in Washington, DC. You do not have to address electronic submissions made through our Web site. We are responsible for ensuring that such submissions go to the proper place.

[68 FR 61347, Oct. 28, 2003, as amended at 70 FR 11543, Mar. 9, 2005]

§ 4000.5 Does the PBGC have discretion to waive these filing requirements?

We retain the discretion to waive any requirement under this part, at any time, if warranted by the facts and circumstances.

Subpart B—Issuance Rules

§ 4000.11 What are these issuance rules about?

Where a particular regulation calls for their application, the rules in this subpart B of part 4000 tell you what methods you may use to issue a notice or otherwise provide information to any person other than us (e.g., a participant or beneficiary). They do *not* cover payments to third parties. In some cases, the PBGC regulations tell you to comply with requirements that are found somewhere other than in the PBGC's own regulations (e.g., requirements under the Internal Revenue Code). If so, you must comply with any applicable issuance rules under those other requirements. (Subpart A tells you what filing methods you may use

for filings with us. Subpart C tells you how we determine your filing or issuance date. Subpart D tells you how to compute various periods of time. Subpart E tells you how to maintain required records in electronic form.)

§ 4000.12 What definitions do I need to know for these rules?

You need to know two definitions from § 4001.2 of this chapter: PBGC and person. You also need to know the following definitions:

Filing means any notice, information, or payment that you submit to us under our regulations.

Issuance means any notice or other information you provide to any person other than us under our regulations.

We means the PBGC.

You means the person providing the issuance to a third party.

§ 4000.13 What methods of issuance may I use?

(a) *In general.* You may use any method of issuance, provided you use measures reasonably calculated to ensure actual receipt of the material by the intended recipient. Posting is not a permissible method of issuance under the rules of this part.

(b) *Electronic safe-harbor method.* Section 4000.14 provides a safe-harbor method for meeting the requirements of paragraph (a) of this section when providing an issuance using electronic media.

§ 4000.14 What is the safe-harbor method for providing an issuance by electronic media?

(a) *In general.* Except as otherwise provided by applicable law, rule or regulation, you satisfy the requirements of § 4000.13 if you follow the methods described at paragraph (b) of this section when providing an issuance by electronic media to any person described in paragraph (c) or (d) of this section.

(b) *Issuance requirements.* (1) You must take appropriate and necessary measures reasonably calculated to ensure that the system for furnishing documents—

(i) Results in actual receipt of transmitted information (e.g., using return-receipt or notice of undelivered electronic mail features, conducting periodic reviews or surveys to confirm receipt of the transmitted information); and

(ii) Protects confidential information relating to the intended recipient (e.g., incorporating into the system measures designed to preclude unauthorized receipt of or access to such information by anyone other than the intended recipient);

(2) You prepare and furnish electronically delivered documents in a manner that is consistent with the style, format and content requirements applicable to the particular document;

(3) You provide each intended recipient with a notice, in electronic or non-electronic form, at the time a document is furnished electronically, that apprises the intended recipient of—

(i) The significance of the document when it is not otherwise reasonably evident as transmitted (e.g., ''The attached participant notice contains information on the funding level of your defined benefit pension plan and the benefits guaranteed by the Pension Benefit Guaranty Corporation.''); and

(ii) The intended recipient's right to request and obtain a paper version of such document; and

(4) You give the intended recipient, upon request, a paper version of the electronically furnished documents.

(c) *Employees with electronic access.* This section applies to a participant who—

(1) Has the ability to effectively access the document furnished in electronic form at any location where the participant is reasonably expected to perform duties as an employee; and

(2) With respect to whom access to the employer's electronic information system is an integral part of those duties.

(d) *Any person.* This section applies to any person who—

(1) Except as provided in paragraph (d)(2) of this section, has affirmatively consented, in electronic or non-electronic form, to receiving documents through electronic media and has not withdrawn such consent;

(2) In the case of documents to be furnished through the Internet or other electronic communication network,

has affirmatively consented or confirmed consent electronically, in a manner that reasonably demonstrates the person's ability to access information in the electronic form that will be used to provide the information that is the subject of the consent, and has provided an address for the receipt of electronically furnished documents;

(3) Prior to consenting, is provided, in electronic or non-electronic form, a clear and conspicuous statement indicating:

(i) The types of documents to which the consent would apply;

(ii) That consent can be withdrawn at any time without charge;

(iii) The procedures for withdrawing consent and for updating the participant's, beneficiary's or other person's address for receipt of electronically furnished documents or other information;

(iv) The right to request and obtain a paper version of an electronically furnished document, including whether the paper version will be provided free of charge;

(v) Any hardware and software requirements for accessing and retaining the documents; and

(4) Following consent, if a change in hardware or software requirements needed to access or retain electronic documents creates a material risk that the person will be unable to access or retain electronically furnished documents,

(i) Is provided with a statement of the revised hardware or software requirements for access to and retention of electronically furnished documents;

(ii) Is given the right to withdraw consent without charge and without the imposition of any condition or consequence that was not disclosed at the time of the initial consent; and

(iii) Again consents, in accordance with the requirements of paragraph (d)(1) or paragraph (d)(2) of this section, as applicable, to the receipt of documents through electronic media.

§ 4000.15 Does the PBGC have discretion to waive these issuance requirements?

We retain the discretion to waive any requirement under this part, at any time, if warranted by the facts and circumstances.

Subpart C—Determining Filing and Issuance Dates

§ 4000.21 What are these rules for determining the filing or issuance date about?

Where the particular regulation calls for their application, the rules in this subpart C of part 4000 tell you how we will determine the date you send us a filing and the date you provide an issuance to someone other than us (such as a participant). These rules do *not* cover payments to third parties. In addition, they do not cover filings with us that are not made under our regulations, such as procurement filings, litigation filings, and applications for employment with us. In some cases, the PBGC regulations tell you to comply with requirements that are found somewhere other than in the PBGC's own regulations (e.g., requirements under the Internal Revenue Code (Title 26, USC)). In meeting those requirements, you should follow any applicable rules under those requirements for determining the filing and issuance date. (Subpart A tells you what filing methods you may use for filings with us. Subpart B tells you what methods you may use to issue a notice or otherwise provide information to any person other than us. Subpart D tells you how to compute various periods of time. Subpart E tells you how to maintain required records in electronic form.)

§ 4000.22 What definitions do I need to know for these rules?

You need to know two definitions from § 4001.2 of this chapter: PBGC and person. You also need to know the following definitions:

Business day means a day other than a Saturday, Sunday, or Federal holiday. *We* means the PBGC.

You means the person filing with us or the person providing the issuance to a third party.

§ 4000.23 When is my submission or issuance treated as filed or issued?

(a) *Filed or issued when sent.* Generally, we treat your submission as filed, or your issuance as provided, on

the date you send it, if you meet certain requirements. The requirements depend upon the method you use to send your submission or issuance (see §§ 4000.24 through 4000.29). (Certain filings are always treated as filed when received, as explained in paragraph (b)(2) of this section.) A submission made through our Web site is considered to have been sent when you perform the last act necessary to indicate that your submission is filed and cannot be further edited or withdrawn.

(b) *Filed or issued when received*—(1) *In general.* If you do not meet the requirements for your submission or issuance to be treated as filed or issued when sent (see §§ 4000.24 through 4000.32), we treat it as filed or issued on the date received in a permitted format at the proper address.

(2) *Certain filings always treated as filed when received.* We treat the following submissions as filed on the date we receive your submission, no matter what method you use:

(i) *Applications for benefits.* An application for benefits or related submission (unless the instructions for the applicable forms provide for an earlier date);

(ii) *Advance notice of reportable events.* Information required under subpart C of part 4043 of this chapter, dealing with advance notice of reportable events;

(iii) *Form 200 filings.* Information required under subpart D of part 4043 of this chapter, dealing with notice of certain missed minimum funding contributions; and

(iv) *Requests for approval of multiemployer plan amendments.* A request for approval of an amendment filed with the PBGC pursuant to part 4220 of this chapter.

(3) *Determining our receipt date for your filing.* If we receive your submission at the correct address by 5 p.m. (our time) on a business day, we treat it as received on that date. If we receive your submission at the correct address after 5 p.m. on a business day, or anytime on a weekend or Federal holiday, we treat it as received on the next business day. For example, if you send your fax or e-mail of a Form 200 filing to us in Washington, DC, on Friday, March 15, from California at 3 p.m. (Pacific standard time), and we receive it immediately at 6 p.m. (our time), we treat it as received on Monday, March 18. A submission made through our Web site is considered to have been received when we receive an electronic signal that you have performed the last act necessary to indicate that your submission is filed and cannot be further edited or withdrawn.

[68 FR 61347, Oct. 28, 2003, as amended at 70 FR 11543, Mar. 9, 2005]

§ 4000.24 What if I mail my submission or issuance using the U.S. Postal Service?

(a) *In general.* Your filing or issuance date is the date you mail your submission or issuance using the U.S. Postal Service if you meet the requirements of paragraph (b) of this section, and you mail it by the last scheduled collection of the day. If you mail it later than that, or if there is no scheduled collection that day, your filing or issuance date is the date of the next scheduled collection. If you do not meet the requirements of paragraph (b), your filing or issuance date is the date of receipt at the proper address.

(b) *Requirements for ''send date.''* Your submission or issuance must meet the applicable postal requirements, be properly addressed, and you must use First-Class Mail (or a U.S. Postal Service mail class that is at least the equivalent of First-Class Mail, such as Priority Mail or Express Mail). However, if you are filing an advance notice of reportable event or a Form 200 (notice of certain missed contributions), see § 4000.23(b); these filings are always treated as filed when received.

(c) *Presumptions.* We make the following presumptions—

(1) *U.S. Postal Service postmark.* If you meet the requirements of paragraph (b) of this section and your submission or issuance has a legible U.S. Postal Service postmark, we presume that the postmark date is the filing or issuance date. However, you may prove an earlier date under paragraph (a) of this section.

(2) *Private meter postmark.* If you meet the requirements of paragraph (b) of this section and your submission or issuance has a legible postmark made

by a private postage meter (but no legible U.S. Postal Service postmark) and arrives at the proper address by the time reasonably expected, we presume that the metered postmark date is your filing or issuance date. However, you may prove an earlier date under paragraph (a) of this section.

(d) *Examples.* (1) You mail your issuance using the U.S. Postal Service and meet the requirements of paragraph (b) of this section. You deposit your issuance in a mailbox at 4 p.m. on Friday, March 15 and the next scheduled collection at that mailbox is 5 p.m. that day. Your issuance date is March 15. If on the other hand you deposit it at 6 p.m. and the next collection at that mailbox is not until Monday, March 18, your issuance date is March 18.

(2) You mail your submission using the U.S. Postal Service and meet the requirements of paragraph (b) of this section. You deposit your submission in the mailbox at 4 p.m. on Friday, March 15, and the next scheduled collection at that mailbox is 5 p.m. that day. If your submission does not show a March 15 postmark, then you may prove to us that you mailed your submission by the last scheduled collection on March 15.

§ 4000.25 What if I use the postal service of a foreign country?

If you send your submission or issuance using the postal service of a foreign country, your filing or issuance date is the date of receipt at the proper address.

§ 4000.26 What if I use a commercial delivery service?

(a) *In general.* Your filing or issuance date is the date you deposit your submission or issuance with the commercial delivery service if you meet the requirements of paragraph (b) of this section, and you deposit it by the last scheduled collection of the day for the type of delivery you use (such as two-day delivery or overnight delivery). If you deposit it later than that, or if there is no scheduled collection that day, your filing or issuance date is the date of the next scheduled collection. If you do not meet the requirements of paragraph (b), your filing or issuance date is the date of receipt at the proper address. However, if you are filing an advance notice of reportable event or a Form 200 (notice of certain missed contributions), see § 4000.23(b); these filings are always treated as filed when received.

(b) *Requirements for ''send date.''* Your submission or issuance must meet the applicable requirements of the commercial delivery service, be properly addressed, and—

(1) *Delivery within two days.* It must be reasonable to expect your submission or issuance will arrive at the proper address by 5 p.m. on the second business day after the next scheduled collection; or

(2) *Designated delivery service.* You must use a ''designated delivery service'' under section 7502(f) of the Internal Revenue Code (Title 26, USC). Our Web site, *http://www.pbgc.gov,* lists those designated delivery services. You should make sure that both the provider and the particular type of delivery (such as two-day delivery) are designated.

(c) *Example.* You send your submission by commercial delivery service using two-day delivery. In addition, you meet the requirements of paragraph (b) of this section. Suppose that the deadline for two-day delivery at the place you make your deposit is 8 p.m. on Friday, March 15. If you deposit your submission by that the deadline, your filing date is March 15. If, instead, you deposit it after the 8 p.m. deadline and the next collection at that site for two-day delivery is on Monday, March 18, your filing date is March 18.

§ 4000.27 What if I hand deliver my submission or issuance?

Your filing or issuance date is the date of receipt of your hand-delivered submission or issuance at the proper address. A hand-delivered issuance need not be delivered while the intended recipient is physically present. For example, unless you have reason to believe that the intended recipient will not receive the notice within a reasonable amount of time, a notice is deemed to be received when you place it in the intended recipient's office mailbox. Our Web site, *http://*

www.pbgc.gov, and the instructions to our forms, identify the proper addresses for filings with us.

§ 4000.28 What if I send a computer disk?

(a) *In general*. We determine your filing or issuance date for a computer disk as if you had sent a paper version of your submission or issuances if you meet the requirements of paragraph (b) of this section.

(1) *Filings*. For computer-disk filings, we may treat your submission as invalid if you fail to meet the requirements of paragraph (b)(1) or (b)(3) of this section.

(2) *Issuances*. For computer-disk issuances, we may treat your issuance as invalid if—

(i) You fail to meet the requirements (''using measures reasonably calculated to ensure actual receipt'') of § 4000.13(a), or

(ii) You fail to meet the contact information requirements of paragraph (b)(3) of this section.

(b) *Requirements*. To get the filing date under paragraph (a) of this section, you must meet the requirements of paragraphs (b)(1) and (b)(3). To get the issuance date under paragraph (a), you must meet the requirements of paragraphs (b)(2) and (b)(3).

(1) *Technical requirements for filings*. For filings, your electronic disk must comply with any technical requirements for that type of submission (our Web site, *http://www.pbgc.gov*, identifies the technical requirements for each type of filing).

(2) *Technical requirements for issuances*. For issuances, you must comply with the safe-harbor method under § 4000.14.

(3) *Identify contact person*. For filings and issuances, you must include, in a paper cover letter or on the disk's label, the name and telephone number of the person to contact if we or the intended recipient is unable to read the disk.

§ 4000.29 What if I use electronic delivery?

(a) *In general*. Your filing or issuance date is the date you electronically transmit your submission or issuance to the proper address if you meet the requirements of paragraph (b) of this section. Note that we always treat an advance notice of reportable event and a Form 200 (notice of certain missed contributions) as filed when received. A submission made through our Web site is considered to have been transmitted when you perform the last act necessary to indicate that your submission is filed and cannot be further edited or withdrawn. You do not have to address electronic submissions made through our Web site. We are responsible for ensuring that such submissions go to the proper place.

(1) *Filings*. For electronic filings, if you fail to meet the requirements of paragraph (b)(1) or (b)(3) of this section, we may treat your submission as invalid.

(2) *Issuances*. For electronic issuances, we may treat your issuance as invalid if—

(i) You fail to meet the requirements (''using measures reasonably calculated to ensure actual receipt'') of § 4000.13(a), or

(ii) You fail to meet the contact information requirements of paragraph (b)(3) of this section.

(b) *Requirements*. To get the filing date under paragraph (a) of this section, you must meet the requirements of paragraphs (b)(1) and (b)(3). To get the issuance date under paragraph (a), you must meet the requirement of paragraphs (b)(2) and (b)(3).

(1) *Technical requirements for filings*. For filings, your electronic submission must comply with any technical requirements for that type of submission (our Web site, *http://www.pbgc.gov*, identifies the technical requirements for each type of filing).

(2) *Technical requirements for issuances*. For issuances, you must comply with the safe-harbor method under § 4000.14.

(3) *Identify contact person*. For an e-mail submission or issuance with an attachment, you must include, in the body of your e-mail, the name and telephone number of the person to contact if we or the intended recipient needs you to resubmit your filing or issuance.

(c) *Failure to meet address requirement*. If you send your electronic submission or issuance to the wrong address (but

you meet the requirements of paragraph (b) of this section), your filing or issuance date is the date of receipt at the proper address.

[68 FR 61347, Oct. 28, 2003, as amended at 70 FR 11544, Mar. 9, 2005]

§ 4000.30 What if I need to resend my filing or issuance for technical reasons?

(a) *Request to resubmit*—(1) *Filing*. We may ask you to resubmit all or a portion of your filing for technical reasons (for example, because we are unable to open an attachment to your e-mail). In that case, your submission (or portion) is invalid. However, if you comply with the request or otherwise resolve the problem (e.g., by providing advice that allows us to open the attachment to your e-mail) by the date we specify, your filing date for the submission (or portion) that we asked you to resubmit is the date you filed your original submission. If you comply with our request late, your submission (or portion) will be treated as filed on the date of your resubmission.

(2) *Issuance*. The intended recipient may, for good reason (of a technical nature), ask you to resend all or a portion of your issuance (for example, because of a technical problem in opening an attachment to your e-mail). In that case, your issuance (or portion) is invalid. However, if you comply with the request or otherwise resolve the problem (e.g., by providing advice that the recipient uses to open the attachment to your e-mail), within a reasonable time, your issuance date for the issuance (or portion) that the intended recipient asked you to resend is the date you provided your original issuance. If you comply with the request late, your issuance (or portion) will be treated as provided on the date of your reissuance.

(b) *Reason to believe submission or issuance not received or defective*. If you have reason to believe that we have not received your submission (or have received it in a form that is not useable), or that the intended recipient has not received your issuance (or has received it in a form that is not useable), you must promptly resend your submission or issuance to get your original filing or issuance date. However, we may require evidence to support your original filing or issuance date. If you are not prompt, or you do not provide us with any evidence we may require to support your original filing or issuance date, your filing or issuance date is the filing or issuance date of your resubmission or reissuance.

§ 4000.31 Is my issuance untimely if I miss a few participants or beneficiaries?

The PBGC will not treat your issuance as untimely based on your failure to provide the issuance to a participant or beneficiary in a timely manner if—

(a) The failure resulted from administrative error;

(b) The failure involved only a *de minimis* percentage of intended recipients; and

(c) You resend the issuance to the intended recipient promptly after discovering the error.

§ 4000.32 Does the PBGC have discretion to waive any requirements under this part?

We retain the discretion to waive any requirement under this part, at any time, if warranted by the facts and circumstances.

Subpart D—Computation of Time

§ 4000.41 What are these computation-of-time rules about?

The rules in this subpart D of part 4000 tell you how to compute time periods under our regulations (e.g., for filings with us and issuances to third parties) where the particular regulation calls for their application. (There are specific exceptions or modifications to these rules in § 4007.6 of this chapter (premium payments), § 4050.6(d)(3) of this chapter (payment of designated benefits for missing participants), and § 4062.10 of this chapter (employer liability payments). In some cases, the PBGC regulations tell you to comply with requirements that are found somewhere other than in the PBGC's own regulations (e.g., requirements under the Internal Revenue Code (Title 26, USC)). In meeting those requirements, you should follow any applicable computation-of-time rules under

those other requirements. (Subpart A tells you what filing methods you may use for filings with us. Subpart B tells you what methods you may use to issue a notice or otherwise provide information to any person other than us. Subpart C tells you how we determine your filing or issuance date. Subpart E tells you how to maintain required records in electronic form.)

§ 4000.42 What definitions do I need to know for these rules?

You need to know two definitions from § 4001.2 of this chapter: PBGC and person. You also need to know the following definitions:

Business day means a day other than a Saturday, Sunday, or Federal holiday.

We means the PBGC.

You means the person responsible, under our regulations, for the filing or issuance to which these rules apply.

§ 4000.43 How do I compute a time period?

(a) *In general.* If you are computing a time period to which this part applies, whether you are counting forwards or backwards, the day after (or before) the act, event, or default that begins the period is day one, the next day is day two, and so on. Count all days, including weekends and Federal holidays. However, if the last day you count is a weekend or Federal holiday, extend or shorten the period (whichever benefits you in complying with the time requirement) to the next regular business day. The examples in paragraph (d) of this section illustrate these rules.

(b) *When date is designated.* In some cases, our regulations designate a specific day as the end of a time period, such as ''the last day'' of a plan year or ''the fifteenth day'' of a calendar month. In these cases, you simply use the designated day, together with the weekend and holiday rule of paragraph (a) of this section.

(c) *When counting months.* If a time period is measured in months, first identify the date (day, month, and year) of the act, event, or default that begins the period. The corresponding day of the following (or preceding) month is one month later (or earlier), and so on. For example, two months after July 15 is September 15. If the period ends on a weekend or Federal holiday, follow the weekend and holiday rule of paragraph (a) of this section. There are two special rules for determining what the corresponding day is when you start counting on a day that is at or near the end of a calendar month:

(1) *Special ''last-day'' rule.* If you start counting on the last day of a calendar month, the corresponding day of any calendar month is the last day of that calendar month. For example, a three-month period measured from November 30 ends (if counting forward) on the last day of February (the 28th or 29th) or (if counting backward) on the last day of August (the 31st).

(2) *Special February rule.* If you start counting on the 29th or 30th of a calendar month, the corresponding day of February is the last day of February. For example, a one-month period measured from January 29 ends on the last day of February (the 28th or 29th).

(d) *Examples*—(1) *Counting backwards.* Suppose you are required to file an advance notice of reportable event for a transaction that is effective December 31. Under our regulations, the notice is due at least 30 days before the effective date of the event. To determine your deadline, count December 30 as day 1, December 29 as day 2, December 28 as day 3, and so on. Therefore, December 1 is day 30. Assuming that day is not a weekend or holiday, your notice is timely if you file it on or before December 1.

(2) *Weekend or holiday rule.* Suppose you are filing a notice of intent to terminate. The notice must be issued at least 60 days and no more than 90 days before the proposed termination date. Suppose the 60th day before the proposed termination date is a Saturday. Your notice is timely if you issue it on the following Monday even though that is only 58 days before the proposed termination date. Similarly, if the 90th day before the proposed termination date is Wednesday, July 4 (a Federal holiday), your notice is timely if you issue it on Tuesday, July 3, even though that is 91 days before the proposed termination date.

(3) *Counting months.* Suppose you are required to issue a Participant Notice

two months after December 31. The deadline for the Participant Notice is the last day of February (the 28th or 29th). If the last day of February is a weekend or Federal holiday, your deadline is extended until the next day that is not a weekend or Federal holiday.

Subpart E—Electronic Means of Record Retention

§ 4000.51 What are these record retention rules about?

The rules in this subpart E of part 4000 tell you what methods you may use to meet any record retention requirement under our regulations if you choose to use electronic means. The rules for who must retain the records, how long the records must be maintained, and how records must be made available to us are contained in the specific part where the record retention requirement is found. (Subpart A tells you what filing methods you may use for filings with us and how we determine your filing date. Subpart B tells you what methods you may use to issue a notice or otherwise provide information to any person other than us. Subpart C tells you how we determine your filing or issuance date. Subpart D tells you how to compute various periods of time.)

§ 4000.52 What definitions do I need to know for these rules?

You need to know two definitions from § 4001.2 of this chapter: PBGC and person. You also need to know the following definitions:

We means the PBGC.

You means the person subject to the record retention requirement.

§ 4000.53 May I use electronic media to satisfy PBGC's record retention requirements?

General requirements. You may use electronic media to satisfy the record maintenance and retention requirements of this chapter if:

(a) The electronic recordkeeping system has reasonable controls to ensure the integrity, accuracy, authenticity and reliability of the records kept in electronic form;

(b) The electronic records are maintained in reasonable order and in a safe and accessible place, and in such manner as they may be readily inspected or examined (for example, the recordkeeping system should be capable of indexing, retaining, preserving, retrieving and reproducing the electronic records);

(c) The electronic records are readily convertible into legible and readable paper copy as may be needed to satisfy reporting and disclosure requirements or any other obligation under section 302(f)(4), section 307(e), or Title IV of ERISA;

(d) The electronic recordkeeping system is not subject, in whole or in part, to any agreement or restriction that would, directly or indirectly, compromise or limit a person's ability to comply with any reporting and disclosure requirement or any other obligation under section 302(f)(4), section 307(e), or Title IV of ERISA;

(e) Adequate records management practices are established and implemented (for example, following procedures for labeling of electronically maintained or retained records, providing a secure storage environment, creating back-up electronic copies and selecting an off-site storage location, observing a quality assurance program evidenced by regular evaluations of the electronic recordkeeping system including periodic checks of electronically maintained or retained records; and retaining paper copies of records that cannot be clearly, accurately or completely transferred to an electronic recordkeeping system); and

(f) All electronic records exhibit a high degree of legibility and readability when displayed on a video display terminal or other method of electronic transmission and when reproduced in paper form. The term ''legibility'' means the observer must be able to identify all letters and numerals positively and quickly to the exclusion of all other letters or numerals. The term ''readability'' means that the observer must be able to recognize a group of letters or numerals as words or complete numbers.

§ 4000.54 May I dispose of original paper records if I keep electronic copies?

You may dispose of original paper records any time after they are transferred to an electronic recordkeeping system that complies with the requirements of this subpart, except such original records may not be discarded if the electronic record would not constitute a duplicate or substitute record under the terms of the plan and applicable federal or state law.

(Approved by the Office of Management and Budget under control number 1212–0059)

PART 4001—TERMINOLOGY

Sec.
4001.1 Purpose and scope.
4001.2 Definitions.
4001.3 Trades or businesses under common control; controlled groups.

AUTHORITY: 29 U.S.C. 1301, 1302(b)(3).

SOURCE: 61 FR 34010, July 1, 1996, unless otherwise noted.

§ 4001.1 Purpose and scope.

This part contains definitions of certain terms used in this chapter and the regulations under which the PBGC makes various controlled group determinations.

§ 4001.2 Definitions.

For purposes of this chapter (unless otherwise indicated or required by the context):

Affected party means, with respect to a plan—

(1) Each participant in the plan;

(2) Each beneficiary of a deceased participant;

(3) Each alternate payee under an applicable qualified domestic relations order, as defined in section 206(d)(3) of ERISA;

(4) Each employee organization that currently represents any group of participants;

(5) For any group of participants not currently represented by an employee organization, the employee organization, if any, that last represented such group of participants within the 5-year period preceding issuance of the notice of intent to terminate; and

(6) The PBGC.

If an affected party has designated, in writing, a person to receive a notice on behalf of the affected party, any reference to the affected party (in connection with the notice) shall be construed to refer to such person.

Annuity means a series of periodic payments to a participant or surviving beneficiary for a fixed or contingent period.

Bankruptcy filing date means, with respect to a plan, the date on which a petition commencing a case under the United States Bankruptcy Code is filed, or the date on which any similar filing is made commencing a case under any similar Federal law or law of a State or political subdivision, with respect to the contributing sponsor of the plan, if such case has not been dismissed as of the termination date of the plan. If a bankruptcy petition is filed under one chapter of the United States Bankruptcy Code, or under one chapter or provision of any such similar law, and the case is converted to a case under a different chapter or provision of such Code or similar law (for example, a Chapter 11 reorganization case is converted to a Chapter 7 liquidation case), the date of the original petition is the bankruptcy filing date. If such a plan has more than one contributing sponsor:

(1) If all contributing sponsors entered bankruptcy on the same date, that date is the bankruptcy filing date;

(2) If all contributing sponsors did not enter bankruptcy on the same date (or if not all contributing sponsors are in bankruptcy), PBGC will determine the date that will be treated as the bankruptcy filing date based on the facts and circumstances, which may include such things as the relative sizes of the contributing sponsors, the relative amounts of their minimum required contributions to the plan, the timing of the different bankruptcies, and the expectations of participants.

Basic-type benefit means a benefit that is guaranteed under part 4022 of this chapter or that would be guaranteed if the guarantee limits in §§ 4022.22 through 4022.27 of this chapter did not apply. In a PPA 2006 bankruptcy termination, it also includes a benefit accrued by a participant, or to which a participant otherwise became entitled,

on or before the plan's termination date but that is not guaranteed solely because of the provisions of §§ 4022.3(b) or 4022.4(c).

Benefit liabilities means the benefits of participants and their beneficiaries under the plan (within the meaning of section 401(a)(2) of the Code).

Code means the Internal Revenue Code of 1986, as amended.

Complete withdrawal means a complete withdrawal as described in section 4203 of ERISA.

Contributing sponsor means a person who is a contributing sponsor as defined in section 4001(a)(13) of ERISA.

Controlled group means, in connection with any person, a group consisting of such person and all other persons under common control with such person, determined under § 4001.3 of this part. For purposes of determining the persons liable for contributions under section 412(c)(11)(B) of the Code or section 302(c)(11)(B) of ERISA, or for premiums under section 4007(e)(2) of ERISA, a controlled group also includes any group treated as a single employer under section 414 (m) or (o) of the Code. Any reference to a plan's controlled group means all contributing sponsors of the plan and all members of each contributing sponsor's controlled group.

Corporation means the Pension Benefit Guaranty Corporation, except where the context demonstrates that a different meaning is intended.

Defined benefit plan means a plan described in section 3(35) of ERISA.

Disclosure officer means the official designated as disclosure officer in the Office of the General Counsel, PBGC.

Distress termination means the voluntary termination of a single-employer plan in accordance with section 4041(c) of ERISA and part 4041, subpart C, of this chapter.

Distribution date means:

(1) Except as provided in paragraph (2)—

(i) For benefits provided through the purchase of irrevocable commitments, the date on which the obligation to provide the benefits passes from the plan to the insurer; and

(ii) For benefits provided other than through the purchase of irrevocable commitments, the date on which the benefits are delivered to the participant or beneficiary (or to another plan or benefit arrangement or other recipient authorized by the participant or beneficiary in accordance with applicable law and regulations) personally or by deposit with a mail or courier service (as evidenced by a postmark or written receipt); or

(2) The deemed distribution date (as defined in § 4050.2) in the case of a designated benefit paid to the PBGC in accordance with part 4050 of this chapter (dealing with missing participants).

Earliest retirement age at valuation date means the later of: a participant's age on his or her birthday nearest to the valuation date, or the participant's attained age as of his or her Earliest PBGC Retirement Date (as determined under § 4022.10 of this chapter).

EIN means the nine-digit employer identification number assigned by the Internal Revenue Service to a person.

Employer means all trades or businesses (whether or not incorporated) that are under common control, within the meaning of § 4001.3 of this chapter.

ERISA means the Employee Retirement Income Security Act of 1974, as amended.

Expected retirement age (XRA) means the age, determined in accordance with §§ 4044.55 through 4044.57 of this chapter, at which a participant is expected to begin receiving benefits when the participant has not elected, before the allocation date, an annuity starting date. This is the age to which a participant's benefit payment is assumed to be deferred for valuation purposes. An XRA is equal to or greater than the participant's earliest retirement age at valuation date but less than his or her normal retirement age.

Fair market value means the price at which property would change hands between a willing buyer and a willing seller, neither being under any compulsion to buy or sell and both having reasonable knowledge of relevant facts.

FOIA means the Freedom of Information Act, as amended (5 U.S.C. 552).

Funding standard account means an account established and maintained under section 302(b) of ERISA or section 412(b) of the Code.

Guaranteed benefit means a benefit under a single-employer plan that is

guaranteed by the PBGC under section 4022(a) of ERISA and part 4022 of this chapter, or a benefit under a multiemployer plan that is guaranteed by the PBGC under section 4022A of ERISA.

Insurer means a company authorized to do business as an insurance carrier under the laws of a State or the District of Columbia.

Irrevocable commitment means an obligation by an insurer to pay benefits to a named participant or surviving beneficiary, if the obligation cannot be cancelled under the terms of the insurance contract (except for fraud or mistake) without the consent of the participant or beneficiary and is legally enforceable by the participant or beneficiary.

IRS means the Internal Revenue Service.

Mandatory employee contributions means amounts contributed to the plan by a participant that are required as a condition of employment, as a condition of participation in such plan, or as a condition of obtaining benefits under the plan attributable to employer contributions.

Mass withdrawal means:

(1) The withdrawal of every employer from the plan,

(2) The cessation of the obligation of all employers to contribute under the plan, or

(3) The withdrawal of substantially all employers pursuant to an agreement or arrangement to withdraw.

Multiemployer Act means the Multiemployer Pension Plan Amendments Act of 1980.

Multiemployer plan means a plan that is described in section 4001(a)(3) of ERISA and that is covered by title IV of ERISA. Multiemployer plan also means a plan that elects to be a multiemployer plan under ERISA section 3(37)(G) and Code section 414(f)(6), pursuant to procedures prescribed by PBGC.

Multiple employer plan means a single-employer plan maintained by two or more contributing sponsors that are not members of the same controlled group, under which all plan assets are available to pay benefits to all plan participants and beneficiaries.

Non-PPA 2006 bankruptcy termination means a plan termination that is not a PPA 2006 bankruptcy termination.

Nonbasic-type benefit means any benefit provided by a plan other than a basic-type benefit.

Nonforfeitable benefit means a benefit described in section 4001(a)(8) of ERISA. Benefits that become nonforfeitable solely as a result of the termination of a plan will be considered forfeitable.

Normal retirement age means the age specified in the plan as the normal retirement age. This age shall not exceed the later of age 65 or the age attained after 5 years of participation in the plan. If no normal retirement age is specified in the plan, it is age 65.

Notice of intent to terminate means the notice of a proposed termination of a single-employer plan, as required by section 4041(a)(2) of ERISA and § 4041.21 (in a standard termination) or § 4041.41 (in a distress termination) of this chapter.

PBGC means the Pension Benefit Guaranty Corporation.

Person means a person defined in section 3(9) of ERISA.

Plan means a defined benefit plan within the meaning of section 3(35) of ERISA that is covered by title IV of ERISA.

Plan administrator means an administrator, as defined in section 3(16)(A) of ERISA.

Plan sponsor means, with respect to a multiemployer plan, the person described in section 4001(a)(10) of ERISA.

Plan year means the calendar, policy, or fiscal year on which the records of the plan are kept.

PN means the three-digit plan number assigned to a plan.

PPA 2006 bankruptcy termination means a plan termination to which section 404 of the Pension Protection Act of 2006 applies. Section 404 of the Pension Protection Act of 2006 applies to any plan termination in which the termination date occurs while bankruptcy proceedings are pending with respect to the contributing sponsor of the plan, if the bankruptcy proceedings were initiated on or after September 16, 2006. Bankruptcy proceedings are pending, for this purpose, if a contributing sponsor has filed or has had filed against it a petition seeking liquidation or reorganization in a case under title 11,

United States Code, or under any similar Federal law or law of a State or political subdivision, and the case has not been dismissed as of the termination date of the plan.

Proposed termination date means the date specified as such by the plan administrator of a single-employer plan in a notice of intent to terminate or, if later, in the standard or distress termination notice, in accordance with section 4041 of ERISA and part 4041 of this chapter.

Single-employer plan means any defined benefit plan (as defined in section 3(35) of ERISA) that is not a multiemployer plan (as defined in section 4001(a)(3) of ERISA) and that is covered by title IV of ERISA.

Standard termination means the voluntary termination, in accordance with section 4041(b) of ERISA and part 4041, subpart B, of this chapter, of a single-employer plan that is able to provide for all of its benefit liabilities when plan assets are distributed.

Substantial owner means a substantial owner as defined in section 4022(b)(5)(A) of ERISA.

Sufficient for benefit liabilities means that there is no amount of unfunded benefit liabilities, as defined in section 4001(a)(18) of ERISA.

Sufficient for guaranteed benefits means that there is no amount of unfunded guaranteed benefits, as defined in section 4001(a)(17) of ERISA. In a PPA 2006 bankruptcy termination, the determination whether a plan is sufficient for guaranteed benefits is made taking into account the limitations in sections 4022(g) and 4044(e) of ERISA (and corresponding provisions of these regulations). The determinations of which benefits are guaranteed and which benefits are in priority category 3 under section 4044(a)(3) of ERISA are made by reference to the bankruptcy filing date, but the present values of those benefits are determined as of the proposed termination date and the date of distribution.

Termination date means the date established pursuant to section 4048(a) of ERISA.

Title IV benefit means the guaranteed benefit plus any additional benefits to which plan assets are allocated pursuant to section 4044 of ERISA and part 4044 of this chapter.

Unreduced retirement age (URA) means the earlier of the normal retirement age specified in the plan or the age at which an unreduced benefit is first payable.

Voluntary employee contributions means amounts contributed by an employee to a plan, pursuant to the provisions of the plan, that are not mandatory employee contributions.

[61 FR 34010, July 1, 1996, as amended at 61 FR 63989, Dec. 2, 1996; 62 FR 35342, July 1, 1997; 62 FR 60428, Nov. 7, 1997; 62 FR 67728, Dec. 30, 1997; 73 FR 79635, Dec. 30, 2008; 74 FR 11029, Mar. 16, 2009; 74 FR 27081, June 8, 2009; 74 FR 59095, Nov. 17, 2009; 76 FR 34601, June 14, 2011]

§ 4001.3 Trades or businesses under common control; controlled groups.

For purposes of title IV of ERISA:

(a)(1) The PBGC will determine that trades and businesses (whether or not incorporated) are under common control if they are ''two or more trades or businesses under common control'', as defined in regulations prescribed under section 414(c) of the Code.

(2) The PBGC will determine that all employees of trades or businesses (whether or not incorporated) which are under common control shall be treated as employed by a single employer, and all such trades and businesses shall be treated as a single employer.

(3) An individual who owns the entire interest in an unincorporated trade or business is treated as his own employer, and a partnership is treated as the employer of each partner who is an employee within the meaning of section 401(c)(1) of the Code.

(b) In the case of a single-employer plan:

(1) In connection with any person, a controlled group consists of that person and all other persons under common control with such person.

(2) Persons are under common control if they are members of a ''controlled group of corporations'', as defined in regulations prescribed under section 414(b) of the Code, or if they are ''two or more trades or businesses under common control'', as defined in

regulations prescribed under section 414(c) of the Code.

PART 4002—BYLAWS OF THE PENSION BENEFIT GUARANTY CORPORATION

Sec.
4002.1 Name.
4002.2 Offices.
4002.3 Board of Directors, Chair, and Representatives of Board Members.
4002.4 Quorum.
4002.5 Meetings.
4002.6 Place of meetings; use of conference call communications equipment.
4002.7 Voting without a meeting.
4002.8 Conflicts of interest.
4002.9 Director of the Corporation and Senior Officers.
4002.10 Emergency Procedures.
4002.11 Seal.
4002.12 Amendments.

AUTHORITY: 29 U.S.C. 1302(b)(3), 1302(f).

SOURCE: 73 FR 29985, May 23, 2008, unless otherwise noted.

§ 4002.1 Name.

The name of the Corporation is the Pension Benefit Guaranty Corporation.

§ 4002.2 Offices.

The principal office of the Corporation is in the Metropolitan area of the City of Washington, District of Columbia. The Corporation may have additional offices at such other places as the Board of Directors may deem necessary or desirable to the conduct of its business.

§ 4002.3 Board of Directors, Chair, and Representatives of Board Members.

(a)(1) The Corporation is governed by a Board of Directors which is composed of the Secretary of Labor, the Secretary of the Treasury, and the Secretary of Commerce. Members of the Board shall serve without compensation, but shall be reimbursed by the Corporation for travel, subsistence, and other necessary expenses incurred in the performance of their duties as Members of the Board. A person at the time of a meeting of the Board of Directors who is serving in an acting capacity as Secretary of Labor, Secretary of the Treasury, or Secretary of Commerce shall serve as a Member of the Board of Directors with the same authority and effect as the designated Secretary.

(2) The Secretary of Labor shall be the Chair of the Board of Directors and shall call and preside over all Board meetings, and shall, on behalf of the Board, review and approve the Corporation's budget. The Inspector General of the Corporation shall report to the Board through the Chair.

(3) The Board of Directors is responsible for establishing and overseeing the policies of the Corporation. The Board may delegate powers to the Director of the Corporation except that the following powers of the Board may not be delegated to the Director of the Corporation:

(i) Voting on an amendment to these bylaws;

(ii) Approval of the Annual Management Report (AMR), which includes the annual financial statements, management's discussion and analysis, annual performance report, and reports of the independent auditor;

(iii) Approval of the Annual Report, which includes the AMR, the Chairman's message, and certain statutory reporting requirements;

(iv) Approval of the Corporation's Investment Policy Statement;

(v) Approval of the issuance of any notes or debt instruments to the Secretary of the Treasury under Section 4005(c) of ERISA;

(vi) Approval of all final nonprocedural regulations prior to publication in the FEDERAL REGISTER, except for amendments that establish new interest rates and factors under Parts 4044 (Appendices C and D) and 4281 of this chapter, which may be approved by the Director of the Corporation;

(vii) Approval of all reports or recommendations to the Congress required by Title IV of ERISA;

(viii) Approval of any policy matter that would have a significant impact on the pension insurance program or its stakeholders; and

(ix) Review of reports from the Corporation's Inspector General that the Inspector General deems appropriate to deliver to the Board.

(4) The Board shall review the Corporation's Investment Policy Statement at least every two years and approve the Investment Policy Statement at least every four years.

(b)(1) Each Board Member shall designate in writing an official, not below the level of Assistant Secretary, to serve as the Board Member's Representative. Such designation shall be effective until revoked or until a date or event specified therein. A Board Representative may act for all purposes under these bylaws, except that an action of a Board Representative on a Board Member's behalf with respect to the powers described in paragraph (a)(3)(i) through (v) of this section, shall be valid only upon ratification in writing by the Board Member. Any Board Representative may refer for Board action any matter under consideration by the Board Representatives.

(2) A Board Member may designate in writing an official, not below the level of Assistant Secretary, to serve as the Board Member's Alternate Representative at a meeting. An Alternate Representative may act for all purposes at that meeting, except that the Alternate Representative's actions shall be valid only upon ratification in writing by either the Board Member or the Board Representative. Any action of the Alternate Representative involving the powers described in paragraph (a)(3)(i) through (v) of this section or any matter that has been referred to the Board under paragraph (b)(1) of this section must be ratified in writing by the Board Member.

(3) For purposes of this section, ratification shall include approval of the minutes of the meeting of the Board of Directors.

(c) Final procedural regulations and all proposed regulations shall be approved by the Director of the Corporation prior to publication in the FEDERAL REGISTER; however, all final procedural regulations and all proposed regulations shall first be reviewed for comment by each Board Representative, except for amendments that establish new interest rates and factors under Parts 4044 (Appendices C and D) and 4281 of this chapter. A Board Representative may, within 21 days of receiving a final procedural regulation or proposed regulation for review, request that it be referred to the Board Representatives for approval.

§ 4002.4 Quorum.

A majority of the Board Members shall constitute a quorum for the transaction of business. Any act of a majority of the Members present at any meeting at which there is a quorum shall be the act of the Board.

§ 4002.5 Meetings.

Regular meetings of the Board of Directors shall be held as often as required to provide appropriate oversight and guidance to the Corporation and at such times as the Chair shall select. Special meetings of the Board of Directors shall be called by the Chair on the request of any other Board Member. Reasonable notice of any meetings shall be given to each Board Member. The General Counsel of the Corporation shall serve as Secretary to the Board of Directors and keep its minutes. As soon as practicable after each meeting, a draft of the minutes of such meeting shall be distributed to each Member of the Board for approval.

§ 4002.6 Place of meetings; use of conference call communications equipment.

Meetings of the Board of Directors shall be held at the principal office of the Corporation unless otherwise determined by the Board of Directors or the Chair. Any Member may participate in a meeting of the Board of Directors through the use of conference call telephone or similar communications equipment, by means of which all persons participating in the meeting can speak to and hear each other. Any Board Member so participating in a meeting shall be deemed present for all purposes. Actions taken by the Board of Directors at meetings conducted through the use of such equipment, including the votes of each Member, shall be recorded in the usual manner in the minutes of the meetings of the Board of Directors.

§ 4002.7 Voting without a meeting.

A resolution of the Board of Directors signed by each of the Board Members or each of the Board Representatives shall have the same effect as if agreed to at a meeting and shall be kept in the Corporate Minutes Book. A resolution for an action taken on any matter for which a Board Member has been disqualified under § 4002.8 may be signed by the Board Representative of the disqualified Board Member.

§ 4002.8 Conflict of interest.

Any Board Member may disqualify himself or herself from participation in a Board action on any matter if the Board Member may have or may appear to have a conflict of interest. The Board Member shall notify the other Board Members of a disqualification. The disqualified Member's Board Representative, acting independently of that Member, may vote on the matter in the Member's place. The disqualified Board Member need not and may not ratify any action taken on the matter giving rise to his or her disqualification.

§ 4002.9 Director of the Corporation and Senior Officers.

(a) *Director of the Corporation*. The Corporation shall be administered by a Director appointed by the President with the advice and consent of the Senate. Subject to policies established by the Board, the Director shall have responsibility for the Corporation's management, including its personnel, organization and budget practices, and shall carry out the Corporation's functions under Title IV of ERISA. The Director shall submit the Corporation's budget to the Chair of the Board for review and approval.

(b) There shall be the following senior officers of the Corporation, reporting directly to the Director:

(1) Deputy Directors for Policy and Operations, who shall be first and second assistant, respectively;

(2) General Counsel, who shall serve as Secretary to the Board;

(3) Chief Financial Officer;

(4) Chief Information Officer;

(5) Chief Management Officer;

(6) Chief Operating Officer; and

(7) Chief Insurance Program Officer.

(c) Subject to prior approval of the Board, the Director may establish such additional or other senior officers as necessary. Before making an appointment to a senior officer position, the Director shall consult with the Board.

§ 4002.10 Emergency procedures.

(a) An emergency exists if a quorum of the Corporation's Board cannot readily be assembled or act through written contact because of the declaration of a government-wide emergency. These emergency procedures shall remain in effect during the emergency and upon the termination of the emergency shall cease to be operative unless and until another emergency occurs. The emergency procedures shall operate in conjunction with the PBGC Continuity of Operations Plan (''COOP Plan'') of the current year, and any government-wide COOP protocols in effect.

(b) During an emergency, the business of the PBGC shall continue to be managed in accordance with its COOP Plan. The functions of the Board of Directors will be carried out by those Members of the Board of Directors in office at the time the emergency arises, or by persons designated by the agencies' COOP plans to act in place of the Board Members, who are available to act during the emergency. If no such persons are available, then the authority of the Board shall be transferred to the Board Representatives who are available. If no Board Representatives are available, then the Director of the Corporation shall perform essential Board functions.

(c) During an emergency, meetings of the Board may be called by any available Member of the Board. The notice thereof shall specify the time and place of the meeting. To the extent possible, notice shall be given in accordance with these bylaws. Notice shall be given to those Board Members whom it is feasible to reach at the time of the emergency, and notice may be given at a time less than 24 hours before the meeting if deemed necessary by the person giving notice.

§ 4002.11 Seal.

The seal of the Corporation shall be in such form as may be approved from time to time by the Board.

§ 4002.12 Amendments.

These bylaws may be amended or new bylaws adopted by unanimous vote of the Board.

PART 4003—RULES FOR ADMINISTRATIVE REVIEW OF AGENCY DECISIONS

Subpart A—General Provisions

Sec.
4003.1 Purpose and scope.
4003.2 Definitions.
4003.3 PBGC assistance in obtaining information.
4003.4 Extension of time.
4003.5 Non-timely request for review.
4003.6 Representation.
4003.7 Exhaustion of administrative remedies.
4003.8 Request for confidential treatment.
4003.9 Method and date of filing.
4003.10 Computation of time.

Subpart B—Initial Determinations

4003.21 Form and contents of initial determinations.
4003.22 Effective date of determinations.

Subpart C—Reconsideration of Initial Determinations

4003.31 Who may request reconsideration.
4003.32 When to request reconsideration.
4003.33 Where to submit request for reconsideration.
4003.34 Form and contents of request for reconsideration.
4003.35 Final decision on request for reconsideration.

Subpart D—Administrative Appeals

4003.51 Who may appeal or participate in appeals.
4003.52 When to file.
4003.53 Where to file.
4003.54 Contents of appeal.
4003.55 Opportunity to appear and to present witnesses.
4003.56 Consolidation of appeals.
4003.57 Appeals affecting third parties.
4003.58 Powers of the Appeals Board.
4003.59 Decision by the Appeals Board.
4003.60 Referral of appeal to the Director.
4003.61 Action by a single Appeals Board member.

AUTHORITY: 29 U.S.C. 1302(b)(3).

SOURCE: 61 FR 34012, July 1, 1996, unless otherwise noted.

Subpart A—General Provisions

§ 4003.1 Purpose and scope.

(a) *Purpose.* This part sets forth the rules governing the issuance of all initial determinations by the PBGC on cases pending before it involving the matters set forth in paragraph (b) of this section and the procedures for requesting and obtaining administrative review by the PBGC of those determinations. Subpart A contains general provisions. Subpart B sets forth rules governing the issuance of all initial determinations of the PBGC on matters covered by this part. Subpart C establishes procedures governing the reconsideration by the PBGC of initial determinations relating to the matters set forth in paragraphs (b)(1) through (b)(5). Subpart D establishes procedures governing administrative appeals from initial determinations relating to the matters set forth in paragraphs (b)(6) through (b)(11).

(b) *Scope.* This part applies to the following determinations made by the PBGC in cases pending before it and to the review of those determinations:

(1) Determinations that a plan is covered under section 4021 of ERISA;

(2) Determinations with respect to premiums, interest and late payment penalties pursuant to section 4007 of ERISA;

(3) Determinations with respect to voluntary terminations under section 4041 of ERISA, including—

(i) A determination that a notice requirement or a certification requirement under section 4041 of ERISA has not been met,

(ii) A determination that the requirements for demonstrating distress under section 4041(c)(2)(B) of ERISA have not been met, and

(iii) A determination with respect to the sufficiency of plan assets for benefit liabilities or for guaranteed benefits;

(4) Determinations with respect to allocation of assets under section 4044 of ERISA, including distribution of excess assets under section 4044(d);

(5) Determinations with respect to penalties under section 4071 of ERISA;

(6) Determinations that a plan is not covered under section 4021 of ERISA;

(7) Determinations under section 4022 (a) or (c) of ERISA with respect to benefit entitlement of participants and beneficiaries under covered plans and determinations that a domestic relations order is or is not a qualified domestic relations order under section 206(d)(3) of ERISA and section 414(p) of the Code;

(8) Determinations under section 4022 (b) or (c) or section 4022B of ERISA of the amount of benefits payable to participants and beneficiaries under covered plans;

(9) Determinations of the amount of money subject to recapture pursuant to section 4045 of ERISA;

(10) Determinations of the amount of liability under section 4062(b)(1), section 4063, or section 4064 of ERISA;

(11) Determinations—

(i) That the amount of a participant's or beneficiary's benefit under section 4050(a)(3) of ERISA has been correctly computed based on the designated benefit paid to the PBGC under section 4050(b)(2) of ERISA, or

(ii) That the designated benefit is correct, but only to the extent that the benefit to be paid does not exceed the participant's or beneficiary's guaranteed benefit.

(c) *Matters not covered by this part.* Nothing in this part limits—

(1) The authority of the PBGC to review, either upon request or on its own initiative, a determination to which this part does not apply when, in its discretion, the PBGC determines that it would be appropriate to do so, or

(2) The procedure that the PBGC may utilize in reviewing any determination to which this part does not apply.

[61 FR 34012, July 1, 1996, as amended at 73 FR 38120, July 3, 2008; 77 FR 22489, Apr. 16, 2012]

§ 4003.2 Definitions.

The following terms are defined in § 4001.2 of this chapter: Code, contributing sponsor, controlled group, ERISA, multiemployer plan, PBGC, person, plan administrator, and single-employer plan.

In addition, for purposes of this part:

Aggrieved person means any participant, beneficiary, plan administrator, contributing sponsor of a single-employer plan or member of such a contributing sponsor's controlled group, plan sponsor of a multiemployer plan, or employer that is adversely affected by an initial determination of the PBGC with respect to a pension plan in which such person has an interest. The term ''beneficiary'' includes an alternate payee (within the meaning of section 206(d)(3)(K) of ERISA) under a qualified domestic relations order (within the meaning of section 206(d)(3)(B) of ERISA).

Appeals Board means a board consisting of three PBGC officials. The Director shall appoint a senior PBGC official to serve as Chairperson and three or more other PBGC officials to serve as regular Appeals Board members. The Chairperson shall designate the three officials who will constitute the Appeals Board with respect to a case, provided that a person may not serve on the Appeals Board with respect to a case in which he or she made a decision regarding the merits of the determination being appealed. The Chairperson need not serve on the Appeals Board with respect to all cases.

Appellant means any person filing an appeal under subpart D of this part.

Director means the Director of any department of the PBGC and includes the Director of the PBGC, Deputy Directors, and the General Counsel.

[61 FR 34012, July 1, 1996, as amended at 73 FR 38120, July 3, 2008]

§ 4003.3 PBGC assistance in obtaining information.

A person who lacks information or documents necessary to file a request for review pursuant to subpart C or D of this part, or necessary to a decision whether to seek review, or necessary to participate in an appeal pursuant to § 4003.57 of this part or necessary to a decision whether to participate, may request the PBGC's assistance in obtaining information or documents in the possession of a party other than the PBGC. The request shall state or describe the missing information or documents, the reason why the person needs the information or documents, and the reason why the person needs

the assistance of the PBGC in obtaining the information or documents. The request may also include a request for an extension of time to file pursuant to § 4003.4 of this part.

§ 4003.4 Extension of time.

(a) *General rule*. When a document is required under this part to be filed within a prescribed period of time, an extension of time to file will be granted only upon good cause shown and only when the request for an extension is made before the expiration of the time prescribed. The request for an extension shall be in writing and state why additional time is needed and the amount of additional time requested. The filing of a request for an extension shall stop the running of the prescribed period of time. When a request for an extension is granted, the PBGC shall notify the person requesting the extension, in writing, of the amount of additional time granted. When a request for an extension is denied, the PBGC shall so notify the requestor in writing, and the prescribed period of time shall resume running from the date of denial.

(b) *Disaster relief*. When the President of the United States declares that, under the Disaster Relief Act of 1974, as amended (42 U.S.C. 5121, 5122(2), 5141(b)), a major disaster exists, the Director of the PBGC (or his or her designee) may, by issuing one or more notices of disaster relief, extend the due date for filing a request for reconsideration under § 4003.32 or an appeal under § 4003.52 by up to 180 days.

(1) The due date extension or extensions shall be available only to an aggrieved person who is residing in, or whose principal place of business is within, a designated disaster area, or with respect to whom the office of the service provider, bank, insurance company, or other person maintaining the information necessary to file the request for reconsideration or appeal is within a designated disaster area; and

(2) The request for reconsideration or appeal shall identify the filing as one for which the due date extension is available.

[61 FR 34012, July 1, 1996, as amended at 73 FR 38120, July 3, 2008]

§ 4003.5 Non-timely request for review.

The PBGC will process a request for review of an initial determination that was not filed within the prescribed period of time for requesting review (see §§ 4003.32 and 4003.52) if—

(a) The person requesting review demonstrates in his or her request that he or she did not file a timely request for review because he or she neither knew nor, with due diligence, could have known of the initial determination; and

(b) The request for review is filed within 30 days after the date the aggrieved person, exercising due diligence at all relevant times, first learned of the initial determination where the requested review is reconsideration, or within 45 days after the date the aggrieved person, exercising due diligence at all relevant times, first learned of the initial determination where the request for review is an appeal.

§ 4003.6 Representation.

A person may file any document or make any appearance that is required or permitted by this part on his or her own behalf or he or she may designate a representative. When the representative is not an attorney-at-law, a notarized power of attorney, signed by the person making the designation, which authorizes the representation and specifies the scope of representation shall be filed with the PBGC in accordance with § 4003.9(b) of this part.

§ 4003.7 Exhaustion of administrative remedies.

Except as provided in § 4003.22(b), a person aggrieved by an initial determination of the PBGC covered by this part, other than a determination subject to reconsideration that is issued by a Department Director, has not exhausted his or her administrative remedies until he or she has filed a request for reconsideration under subpart C of this part or an appeal under subpart D of this part, whichever is applicable, and a decision granting or denying the relief requested has been issued.

§ 4003.8 Request for confidential treatment.

If any person filing a document with the PBGC believes that some or all of

the information contained in the document is exempt from the mandatory public disclosure requirements of the Freedom of Information Act, 5 U.S.C. 552, he or she shall specify the information with respect to which confidentiality is claimed and the grounds therefor.

§ 4003.9 Method and date of filing.

(a) *Method of filing*. The PBGC applies the rules in subpart A of part 4000 of this chapter to determine permissible methods of filing with the PBGC under this part.

(b) *Date of filing*. The PBGC applies the rules in subpart C of part 4000 of this chapter to determine the date that a submission under this part was filed with the PBGC.

[68 FR 61352, Oct. 28, 2003]

§ 4003.10 Computation of time.

The PBGC applies the rules in subpart D of part 4000 of this chapter to compute any time period under this part.

[68 FR 61352, Oct. 28, 2003]

Subpart B—Initial Determinations

§ 4003.21 Form and contents of initial determinations.

All determinations to which this subpart applies shall be in writing, shall state the reason for the determination, and, except when effective on the date of issuance as provided in § 4003.22(b), shall contain notice of the right to request review of the determination pursuant to subpart C or subpart D of this part, as applicable, and a brief description of the procedures for requesting review.

§ 4003.22 Effective date of determinations.

(a) *General rule*. Except as provided in paragraph (b) of this section, an initial determination covered by this subpart will not become effective until the prescribed period of time for filing a request for reconsideration under subpart C of this part or an appeal under subpart D of this part, whichever is applicable, has elapsed. The filing of a request for review under subpart C or D of this part shall automatically stay the effectiveness of a determination until a decision on the request for review has been issued by the PBGC.

(b) *Exception*. The PBGC may, in its discretion, order that the initial determination in a case is effective on the date it is issued. When the PBGC makes such an order, the initial determination shall state that the determination is effective on the date of issuance and that there is no obligation to exhaust administrative remedies with respect to that determination by seeking review of it by the PBGC.

Subpart C—Reconsideration of Initial Determinations

§ 4003.31 Who may request reconsideration.

Any person aggrieved by an initial determination of the PBGC to which this subpart applies may request reconsideration of the determination.

§ 4003.32 When to request reconsideration.

Except as provided in §§ 4003.4 and 4003.5, a request for reconsideration must be filed within 30 days after the date of the initial determination of which reconsideration is sought or, when administrative review includes a procedure in part 4903 of this chapter, by the date that is specified in the PBGC's notice of the right to request review.

[61 FR 34012, July 1, 1996, as amended at 75 FR 68205, Nov. 5, 2010]

§ 4003.33 Where to submit request for reconsideration.

A request for reconsideration shall be submitted to the Director of the department within the PBGC that issued the initial determination, except that a request for reconsideration of a determination described in § 4003.1(b)(3)(ii) shall be submitted to the Director. See § 4000.4 of this chapter for information on where to file.

[61 FR 34012, July 1, 1996, as amended at 68 FR 61352, Oct. 28, 2003; 73 FR 38120, July 3, 2008]

§ 4003.34 Form and contents of request for reconsideration.

A request for reconsideration shall—

(a) Be in writing;

(b) Be clearly designated as a request for reconsideration;

(c) Contain a statement of the grounds for reconsideration and the relief sought; and

(d) Reference all pertinent information already in the possession of the PBGC and include any additional information believed to be relevant.

§ 4003.35 Final decision on request for reconsideration.

(a) Except as provided in paragraphs (a)(1) or (a)(2), final decisions on requests for reconsideration will be issued by the same department of the PBGC that issued the initial determination, by an official whose level of authority in that department is higher than that of the person who issued the initial determination.

(1) When an initial determination is issued by a Department Director, the Department Director (or an official designated by the Department Director) will issue the final decision on request for reconsideration of a determination other than one described in § 4003.1(b)(3)(ii).

(2) The Director (or an official designated by the Director) will issue the final decision on a request for reconsideration of a determination described in § 4003.1(b)(3)(ii).

(b) The final decision on a request for reconsideration shall be in writing, specify the relief granted, if any, state the reason(s) for the decision, and state that the person has exhausted his or her administrative remedies.

[61 FR 34012, July 1, 1996, as amended at 73 FR 38120, July 3, 2008]

Subpart D—Administrative Appeals

§ 4003.51 Who may appeal or participate in appeals.

Any person aggrieved by an initial determination to which this subpart applies may file an appeal. Any person who may be aggrieved by a decision under this subpart granting the relief requested in whole or in part may participate in the appeal in the manner provided in § 4003.57.

§ 4003.52 When to file.

Except as provided in §§ 4003.4 and 4003.5, an appeal under this subpart must be filed within 45 days after the date of the initial determination being appealed or, when administrative review includes a procedure in part 4903 of this chapter, by the date that is specified in the PBGC's notice of the right to request review.

[61 FR 34012, July 1, 1996, as amended at 75 FR 68205, Nov. 5, 2010]

§ 4003.53 Where to file.

An appeal or a request for an extension of time to appeal shall be submitted to the Appeals Board. See § 4000.4 of this chapter for additional information on where to file.

[61 FR 34012, July 1, 1996, as amended at 68 FR 61352, Oct. 28, 2003; 73 FR 38120, July 3, 2008]

§ 4003.54 Contents of appeal.

(a) An appeal shall—

(1) Be in writing;

(2) Be clearly designated as an appeal;

(3) Specifically explain why PBGC's determination is wrong and the result the appellant is seeking;

(4) Describe the relevant information the appellant believes is known by PBGC, and summarize any other information the appellant believes is relevant. It is important to include copies of any documentation that support the appellant's claim or the appellant's assertions about this information;

(5) State whether the appellant desires to appear in person or through a representative before the Appeals Board; and

(6) State whether the appellant desires to present witnesses to testify before the Appeals Board, and if so, state why the presence of witnesses will further the decision-making process.

(b) In any case where the appellant believes that another person may be aggrieved if the PBGC grants the relief sought, the appeal shall also include

the name(s) and address(es) (if known) of such other person(s).

[61 FR 34012, July 1, 1996, as amended at 73 FR 38120, July 3, 2008]

§ 4003.55 Opportunity to appear and to present witnesses.

(a) At the discretion of the Appeals Board, any appearance permitted under this subpart may be before a hearing officer designated by the Appeals Board.

(b) An opportunity to appear before the Appeals Board (or a hearing officer) and an opportunity to present witnesses will be permitted at the discretion of the Appeals Board. In general, an opportunity to appear will be permitted if the Appeals Board determines that there is a dispute as to a material fact; an opportunity to present witnesses will be permitted when the Appeals Board determines that witnesses will contribute to the resolution of a factual dispute.

(c) Appearances permitted under this section will take place at the main offices of the PBGC, 1200 K Street NW., Washington, DC 20005–4026, unless the Appeals Board, in its discretion, designates a different location, either on its own initiative or at the request of the appellant or a third party participating in the appeal.

§ 4003.56 Consolidation of appeals.

(a) *When consolidation may be required*. Whenever multiple appeals are filed that arise out of the same or similar facts and seek the same or similar relief, the Appeals Board may, in its discretion, order the consolidation of all or some of the appeals.

(b) *Representation of parties*. Whenever the Appeals Board orders the consolidation of appeals, the appellants may designate one (or more) of their number to represent all of them for all purposes relating to their appeals.

(c) *Decision by Appeals Board*. The decision of the Appeals Board in a consolidated appeal shall be binding on all appellants whose appeals were subject to the consolidation.

§ 4003.57 Appeals affecting third parties.

(a) Before the Appeals Board issues a decision granting, in whole or in part, the relief requested in an appeal, it shall make a reasonable effort to notify third persons who will be aggrieved by the decision of the following:

(1) The pendency of the appeal;

(2) The grounds upon which the appeal is based;

(3) The grounds upon which the Appeals Board is considering reversing the initial determination;

(4) The right to submit written comments on the appeal;

(5) The right to request an opportunity to appear in person or through a representative before the Appeals Board and to present witnesses; and

(6) That no further opportunity to present information to the PBGC with respect to the determination under appeal will be provided.

(b) Written comments and a request to appear before the Appeals Board must be filed within 45 days after the date of the notice from the Appeals Board.

(c) If more than one third party is involved, their participation in the appeal may be consolidated pursuant to the provisions of § 4003.56.

§ 4003.58 Powers of the Appeals Board.

(a) In addition to the powers specifically described in this part, the Appeals Board may request the submission of any information or the appearance of any person it considers necessary to resolve a matter before it and to enter any order it considers necessary for or appropriate to the disposition of any matter before it.

(b) The Appeals Board may refer certain appeals to another PBGC department or to Appeals Board staff to provide a response to the appellant. The response from another PBGC department or Board staff shall be in writing and address the matters raised in the appeal. The response may be in the form of an explanation or corrected benefit determination. In either case, the appellant will have 45 calendar-days from the date of the response to file a written request for review by the Appeals Board. If a written request for review is not filed with the Appeals Board within the 45-calendar-day period the determination shall become effective pursuant to § 4003.22(a).

(1) Appeals that may be referred to another PBGC department or to the Board staff include those that—

(i) Request an explanation of the initial determination being appealed;

(ii) Dispute specific data used in the determination, such as date of hire, date of retirement, date of termination of employment, length of service, compensation, marital status and form of benefit elected; or

(iii) Request an explanation of the limits on benefits payable by PBGC under Part 4022, Subpart B, such as the maximum guaranteeable benefit and phase-in of the PBGC guarantee.

(2) An explanation or corrected benefit determination issued under this subsection is not considered a decision of the Appeals Board. If an appellant aggrieved by PBGC's initial determination is issued an explanation or corrected benefit determination under this section, the appellant has not exhausted his or her administrative remedies until the appellant has filed a timely request with the Appeals Board for review and the Appeals Board has issued a decision granting or denying the relief requested. See § 4003.7 of this part.

[61 FR 34012, July 1, 1996, as amended at 73 FR 38120, July 3, 2008]

§ 4003.59 Decision by the Appeals Board.

(a) In reaching its decision, the Appeals Board shall consider those portions of the file relating to the initial determination, all material submitted by the appellant and any third parties in connection with the appeal, and any additional information submitted by PBGC staff.

(b) The decision of the Appeals Board constitutes the final agency action by the PBGC with respect to the determination which was the subject of the appeal and is binding on all parties who participated in the appeal and who were notified pursuant to § 4003.57 of their right to participate in the appeal.

(c) The decision of the Appeals Board shall be in writing, specify the relief granted, if any, state the bases for the decision, including a brief statement of the facts or legal conclusions supporting the decision, and state that the appellant has exhausted his or her administrative remedies.

§ 4003.60 Referral of appeal to the Director.

The Appeals Board may, in its discretion, refer any appeal to the Director of the PBGC for decision. In such a case, the Director shall have all the powers vested in the Appeals Board by this subpart and the decision of the Director shall meet the requirements of and have the effect of a decision issued under § 4003.59 of this part.

[61 FR 34012, July 1, 1996, as amended at 73 FR 38120, July 3, 2008]

§ 4003.61 Action by a single Appeals Board member.

(a) *Authority to act.* Notwithstanding any other provision of this part, any member of the Appeals Board has the authority to take any action that the Appeals Board could take with respect to a routine appeal as defined in paragraph (b) of this section.

(b) *Routine appeal defined.* For purposes of this section, a routine appeal is any appeal that does not raise a significant issue of law or a precedent-setting issue. This would generally include any appeal that—

(1) Is outside the jurisdiction of the Appeals Board (for example, an appeal challenging the plan's termination date);

(2) Is filed by a person other than an aggrieved person or an aggrieved person's authorized representative;

(3) Is untimely and presents no grounds for waiver or extension of the time limit for filing the appeal, or only grounds that are clearly without merit;

(4) Presents grounds that clearly warrant or clearly do not warrant the relief requested;

(5) Presents only factual issues that are not reasonably expected to affect other appeals (for example, the participant's date of birth or date of hire); or

(6) Presents only issues that are controlled by settled principles of existing law, including Appeals Board precedent (for example, an issue of plan interpretation that has been resolved by the

Appeals Board in a decision on an appeal by another participant in the same plan).

[67 FR 47695, July 22, 2002]

SUBCHAPTER B—PREMIUMS

PART 4006—PREMIUM RATES

Sec.
4006.1 Purpose and scope.
4006.2 Definitions.
4006.3 Premium rate.
4006.4 Determination of unfunded vested benefits.
4006.5 Exemptions and special rules.
4006.6 Definition of ''participant.''
4006.7 Premium rate for certain terminated single-employer plans.

AUTHORITY: 29 U.S.C. 1302(b)(3), 1306, 1307.

SOURCE: 61 FR 34016, July 1, 1996, unless otherwise noted.

§ 4006.1 Purpose and scope.

This part, which applies to all plans covered by title IV of ERISA, provides rules for computing the premiums imposed by sections 4006 and 4007 of ERISA. (See part 4007 of this chapter for rules for the payment of premiums, including due dates and late payment charges.)

§ 4006.2 Definitions.

The following terms are defined in § 4001.2 of this chapter: benefit liabilities, Code, contributing sponsor, ERISA, fair market value, insurer, irrevocable commitment, mandatory employee contributions, multiemployer plan, notice of intent to terminate, PBGC, plan administrator, plan, plan year, single-employer plan, and termination date.

In addition, for purposes of this part:

Continuation plan means a new plan resulting from a consolidation or spinoff that is not *de minimis* pursuant to the regulations under section 414(*l*) of the Code.

New plan means a plan that did not exist before. the premium payment year and includes a plan resulting from a consolidation or spinoff. A plan that meets this definition is considered to be a new plan even if the plan constitutes a successor plan within the meaning of section 4021(a) of ERISA.

Newly covered plan means a plan that becomes covered by title IV of ERISA during the premium payment year and that existed as an uncovered plan immediately before the first date in the premium payment year on which it was a covered plan.

Participant has the meaning described in § 4006.6.

Participant count of a plan means the number of participants in the plan on the participant count date of the plan.

Participant count date of a plan means the date provided for in § 4006.5(c), (d), or (e) as applicable.

Premium funding target has the meaning described in § 4006.4(b)(1).

Premium payment year means the plan year for which the premium is being paid.

Short plan year means a plan year of coverage that is shorter than a normal plan year.

Small plan means a plan—

(1) Whose participant count is not more than 100, or

(2) Whose funding valuation date for the premium payment year, determined in accordance with ERISA section 303(g)(2), is not the first day of the premium payment year.

UVB valuation date of a plan means the plan's funding valuation date for the UVB valuation year, determined in accordance with ERISA section 303(g)(2).

UVB valuation year of a plan means—

(1) In general,—

(i) The plan year preceding the premium payment year, if the plan is a small plan other than a continuation plan, or

(ii) The premium payment year, in any other case; or

(2) For a small plan that so opts subject to PBGC premium instructions, the premium payment year.

[61 FR 34016, July 1, 1996, as amended at 65 FR 75163, Dec. 1, 2000; 73 FR 15074, Mar. 21, 2008; 79 FR 13559, Mar. 11, 2014]

§ 4006.3 Premium rate.

Subject to the provisions of § 4006.5 (dealing with exemptions and special rules) and § 4006.7 (dealing with premiums for certain terminated single-employer plans), the premium paid for basic benefits guaranteed under section 4022(a) or section 4022A(a) of ERISA shall equal the flat-rate premium under paragraph (a) of this section

plus, in the case of a single-employer plan, the variable-rate premium under paragraph (b) of this section. Premium rates (and the MAP–21 cap rate referred to in paragraph (b)(2) of this section) are subject to change each year under inflation indexing provisions in section 4006 of ERISA.

(a) *Flat-rate premium.* The flat-rate premium for a plan is equal to the applicable flat premium rate multiplied by the plan's participant count. The applicable flat premium rate is the amount prescribed for the calendar year in which the premium payment year begins by the applicable provisions of—

(1) ERISA section 4006(a)(3)(A), (F), and (G) for a single-employer plan, or

(2) ERISA section 4006(a)(3)(A), (H), and (J) for a multiemployer plan.

(b) *Variable-rate premium*—(1) *In general.* Subject to the cap provisions in paragraphs (b)(2) and (b)(3) of this section, the variable-rate premium for a single-employer plan is equal to a specified dollar amount for each $1,000 (or fraction thereof) of the plan's unfunded vested benefits as determined under § 4006.4 for the UVB valuation year. The specified dollar amount is the applicable variable premium rate prescribed by the applicable provisions of ERISA section 4006(a)(8) for the calendar year in which the premium payment year begins.

(2) *MAP–21 cap.* The variable-rate premium for a plan is not more than the applicable MAP–21 cap rate multiplied by the plan's participant count. The applicable MAP–21 cap rate is the amount prescribed by the applicable provisions of ERISA section 4006(a)(3)(E)(i)(II), (E)(i)(III), (K), and (L) for the calendar year in which the premium payment year begins.

(3) *Small-employer cap.* (i) *In general.* If a plan is described in paragraph (b)(3)(ii) of this section for the premium payment year, the variable-rate premium is not more than $5 multiplied by the square of the participant count. For example, if the participant count is 20, the variable-rate premium is not more than $2,000 ($\$5 \times 20^2 = \$5 \times 400 = \$2{,}000$).

(ii) *Plans eligible for cap.* A plan is described in paragraph (b)(3)(ii) of this section for the premium payment year if the aggregate number of employees of all employers in the plan's controlled group on the first day of the premium payment year is 25 or fewer.

(iii) *Meaning of ''employee.''* For purposes of paragraph (b)(3)(ii) of this section, the aggregate number of employees is determined in the same manner as under section 410(b)(1) of the Code, taking into account the provisions of section 414(m) and (n) of the Code, but without regard to section 410(b)(3), (4), and (5) of the Code.

[61 FR 34016, July 1, 1996, as amended at 72 FR 71228, Dec. 17, 2007; 73 FR 15074, Mar. 21, 2008; 79 FR 13559, Mar. 11, 2014]

§ 4006.4 Determination of unfunded vested benefits.

(a) *In general.* Except as provided in the exemptions and special rules under § 4006.5, the amount of a plan's unfunded vested benefits for the UVB valuation year is the excess (if any) of the plan's premium funding target for the UVB valuation year (determined under paragraph (b) of this section) over the fair market value of the plan's assets for the UVB valuation year (determined under paragraph (c) of this section). Unfunded vested benefits for the UVB valuation year must be determined as of the plan's UVB valuation date , based on the plan provisions and the plan's population as of that date. The determination must be made in a manner consistent with generally accepted actuarial principles and practices.

(b) *Premium funding target*—(1) *In general.* A plan's premium funding target is its standard premium funding target under paragraph (b)(2) of this section or, if an election to use the alternative premium funding target under § 4006.5(g) is in effect, its alternative premium funding target under § 4006.5(g).

(2) *Standard premium funding target.* A plan's standard premium funding target under this section is the plan's funding target as determined under ERISA section 303(d) (or 303(i), if applicable) for the UVB valuation year using the same assumptions that are used for funding purposes, except that—

(i) Only vested benefits are taken into account, and

(ii) The interest rates to be used are the segment rates for the month preceding the month in which the UVB valuation year begins that are determined in accordance with ERISA section 4006(a)(3)(E)(iv). These are the rates that would be determined under ERISA section 303(h)(2)(C) if ERISA section 303(h)(2)(D) were applied by using the monthly yields for the month preceding the month in which the UVB valuation year begins on investment grade corporate bonds with varying maturities and in the top 3 quality levels rather than the average of such yields for a 24-month period. For this purpose, the transition rule in ERISA section 303(h)(2)(G) is inapplicable.

(3) *''At-risk'' plans; transition rules; loading factor*. The transition rules in ERISA section 303(i)(5) apply to the determination of the premium funding target of a plan in at-risk status for funding purposes. If a plan in at-risk status is also described in ERISA section 303(i)(1)(A)(ii) for the UVB valuation year, its premium funding target reflects a loading factor pursuant to ERISA section 303(i)(1)(C) equal to the sum of—

(i) *Per-participant portion of loading factor*. The amount determined for funding purposes under ERISA section 303(i)(1)(C)(i) for the UVB valuation year, and

(ii) *Four percent portion of loading factor*. Four percent of the premium funding target determined as if the plan were not in at-risk status.

(c) *Value of assets*. The fair market value of a plan's assets under this section is determined in the same manner as for funding purposes under ERISA section 303(g)(3) and (4), except that averaging as described in ERISA section 303(g)(3)(B) must not be used and prior year contributions are included only to the extent received by the plan by the date the premium is filed. Contribution receipts must be accounted for as described in ERISA section 303(g)(4), using effective interest rates determined under ERISA section 303(h)(2)(A) (not rates that could be determined based on the segment rates described in paragraph (b)(2) of this section).

(d) ''*Vested*.'' For purposes of ERISA section 4006(a)(3)(E), this part, and part 4007 of this chapter:

(1) A participant's benefit that is otherwise vested does not fail to be vested merely because of the circumstance that the participant is living, in the case of the following death benefits:

(i) A qualified pre-retirement survivor annuity (as described in ERISA section 205(e)), (ii) A post-retirement survivor annuity that pays some or all of the participant's benefit amount for a fixed or contingent period (such as a joint and survivor annuity or a certain and continuous annuity), and

(iii) A benefit that returns the participant's accumulated mandatory employee contributions (as described in ERISA section 204(c)(2)(C)).

(2) A benefit otherwise vested does not fail to be vested merely because of the circumstance that the benefit may be eliminated or reduced by the adoption of a plan amendment or by the occurrence of a condition or event (such as a change in marital status).

(3) A participant's pre-retirement lump-sum death benefit (other than a benefit described in paragraph (d)(1)(iii) of this section) is not vested if the participant is living.

(4) A participant's disability benefit is not vested if the participant is not disabled.

(e) Illustration of vesting principles. The vesting principles set forth in paragraph (d) of this section are illustrated by the following examples:

(1) *Example 1*. Under Plan A, if a participant retires at or after age 55 but before age 62, the participant receives a temporary supplement from retirement until age 62. The supplement is not a QSUPP (qualified social security supplement), as defined in Treasury Reg. § 1.401(a)(4)–12, and is not protected under Code section 411(d)(6). The temporary supplement is considered vested, and its value is included in the premium funding target, for each participant who, on the UVB valuation date, is at least 55 but less than 62, and thus eligible for the supplement. The calculation is unaffected by the fact that the plan could be amended to remove the supplement after the UVB valuation date.

(2) *Example 2.* Plan B provides a qualified pre-retirement survivor annuity (QPSA) upon the death of a participant who has five years of service, at no charge to the participant. The QPSA is considered vested, and its value is included in the premium funding target, for each participant who, on the UVB valuation date, has five years of service and is thus eligible for the QPSA. The calculation is unaffected by the fact that the participant is alive on that date.

(f) *Plans to which special funding rules apply.* Unfunded vested benefits must be determined (whether the standard premium funding target or the alternative premium funding target is used) without regard to the following provisions of the Pension Protection Act of 2006 (Pub. L. 109–280):

(1) Section 104, dealing generally with plans of cooperatives.

(2) Section 105, dealing generally with plans affected by settlement agreements with PBGC.

(3) Section 106, dealing generally with plans of government contractors.

(4) Section 402, dealing generally with plans of commercial passenger airlines and airline caterers.

[73 FR 15074, Mar. 21, 2008, as amended at 79 FR 13560, Mar. 11, 2014]

§ 4006.5 Exemptions and special rules.

(a) *Variable-rate premium exemptions.* A plan described in any of paragraphs (a)(1)–(a)(4) of this section is not required to determine or report its unfunded vested benefits under § 4006.4 and does not owe a variable-rate premium under § 4006.3(b).

(1) *Plans without vested participants.* A plan is described in this paragraph if it does not have any participants with vested benefits as of the UVB valuation date.

(2) *Section 412(e)(3) plans.* A plan is described in this paragraph if the plan is a plan described in section 412(e)(3) of the Code and the regulations thereunder on the UVB valuation date.

(3) *Plans terminating in standard terminations.* The exemption for a plan described in this paragraph is conditioned upon the plan's making a final distribution of assets in a standard termination. If a plan is ultimately unable to do so, the exemption is revoked and all variable-rate amounts not paid pursuant to this exemption are due retroactive to the applicable due date(s). A plan is described in this paragraph if it makes a final distribution of assets in a standard termination during the premium payment year or if—

(i) The plan administrator has issued notices of intent to terminate the plan in a standard termination in accordance with section 4041(a)(2) of ERISA; and

(ii) The proposed termination date set forth in the notice of intent to terminate is before the beginning of the premium payment year.

(4) *Certain small new and newly covered plans.* A plan is described in this paragraph if—

(i) It is a small plan other than a continuation plan, and

(ii) It is a new plan or a newly covered plan.

(b) *Reporting exemption for plans paying capped variable-rate premium.* A plan that qualifies for the variable-rate premium cap described in ERISA section 4006(a)(3)(H) is not required to determine or report its unfunded vested benefits under § 4006.4 if it reports that it qualifies for the cap and pays a variable-rate premium equal to the amount of the cap.

(c) *Participant count date; in general.* Except as provided in paragraphs (d) and (e) of this section, the participant count date of a plan is the last day of the plan year preceding the premium payment year.

(d) *Participant count date; new and newly covered plans.* The participant count date of a new plan or a newly covered plan is the first day of the premium payment year. For this purpose, a new plan's premium payment year begins on the plan's effective date.

(e) *Participant count date; certain mergers and spinoffs.* (1) The participant count date of a plan described in paragraph (e)(2) of this section is the first day of the premium payment year.

(2) A plan is described in this paragraph (e)(2) for a plan year if —

(i) The plan engages in a merger or spinoff that is not *de minimis* pursuant to the regulations under section 414(l) of the Code (in the case of single-employer plans) or pursuant to part 4231

of this chapter (in the case of multiemployer plans), as applicable;

(ii) The merger or spinoff is effective at the beginning of the premium payment year; and

(iii) The plan is the transferee plan in the case of a merger or the transferor plan in the case of a spinoff.

(f) *Proration for certain short plan years.* The premium for a plan that has a short plan year described in this paragraph (f) is prorated by the number of months in the short plan year (treating a part of a month as a month). The proration applies whether or not the short plan year ends by the premium due date for the short plan year. For purposes of this paragraph (f), there is a short plan year in the following circumstances:

(1) *New or newly covered plan.* A new plan becomes effective less than one full year before the beginning of its second plan year, or a newly covered plan becomes covered on a date other than the first day of its plan year. (Cessation of coverage before the end of a plan year does not give rise to proration under this section.)

(2) *Change in plan year.* A plan amendment changes the plan year, but only if the plan does not merge into or consolidate with another plan or otherwise cease its independent existence either during the short plan year or at the beginning of the full plan year following the short plan year.

(3) *Distribution of assets.* The plan's assets (other than any excess assets) are distributed pursuant to the plan's termination.

(4) *Appointment of trustee.* The plan is a single-employer plan, and a plan trustee is appointed pursuant to section 4042 of ERISA.

(g) *Alternative premium funding target.* A plan's alternative premium funding target is determined in the same way as its standard premium funding target except that the discount rates described in ERISA section 4006(a)(3)(E)(iv) are not used. Instead, the alternative premium funding target is determined using the discount rates that would have been used to determine the funding target for the plan under ERISA section 303 for the purpose of determining the plan's minimum contribution under ERISA section 303 for the UVB valuation year if the segment rate stabilization provisions of ERISA section 303(h)(2)(iv) were disregarded. A plan may elect to compute unfunded vested benefits using the alternative premium funding target instead of the standard premium funding target described in § 4006.4(b)(2), and may revoke such an election, in accordance with the provisions of this paragraph (g). A plan must compute its unfunded vested benefits using the alternative premium funding target instead of the standard premium funding target described in § 4006.4(b)(2) if an election under this paragraph (g) to use the alternative premium funding target is in effect for the premium payment year.

(1) An election under this paragraph (g) to use the alternative premium funding target for a plan must specify the premium payment year to which it first applies and must be filed by the plan's variable-rate premium due date for that premium payment year. The premium payment year to which the election first applies must begin at least five years after the beginning of the premium payment year to which a revocation of a prior election first applied. The election will be effective—

(i) For the premium payment year for which made and for all plan years that begin less than five years thereafter, and

(ii) For all succeeding plan years until the premium payment year to which a revocation of the election first applies.

(2) A revocation of an election under this paragraph (g) to use the alternative premium funding target for a plan must specify the premium payment year to which it first applies and must be filed by the plan's variable-rate premium due date for that premium payment year. The premium payment year to which the revocation first applies must begin at least five years after the beginning of the premium payment year to which the election first applied.

[61 FR 34016, July 1, 1996, as amended at 62 FR 60428, Nov. 7, 1997; 65 FR 75163, Dec. 1, 2000; 71 FR 31081, June 1, 2005; 73 FR 15075, Mar. 21, 2008; 79 FR 13560, Mar. 11, 2014]

§ 4006.6 Definition of "participant."

(a) *General rule*. For purposes of this part and part 4007 of this chapter, an individual is considered to be a participant in a plan on any date if the plan has benefit liabilities with respect to the individual on that date.

(b) *Loss or distribution of benefit*. For purposes of this section, an individual is treated as no longer being a participant—

(1) In the case of an individual with no vested accrued benefit, after—

(i) The individual incurs a one-year break in service under the terms of the plan,

(ii) The individual's entire ''zero-dollar'' vested accrued benefit is deemed distributed under the terms of the plan, or

(iii) The individual dies; and

(2) In the case of a living individual whose accrued benefit is fully or partially vested, or a deceased individual whose accrued benefit was fully or partially vested at the time of death, after—

(i) An insurer makes an irrevocable commitment to pay all benefit liabilities with respect to the individual, or

(ii) All benefit liabilities with respect to the individual are otherwise distributed.

(c) *Examples*. The operation of this section is illustrated by the following examples:

Example 1. Participation under a calendar-year plan begins upon commencement of employment, and the only benefit provided by the plan is an accrued benefit (expressed as a life annuity beginning at age 65) of $30 per month times full years of service. The plan credits a ratable portion of a full year of service for service of at least 1,000 hours but less than 2,000 hours in a service computation period that begins on the date when the participant commences employment and each anniversary of that date. John and Mary both commence employment on July 1, 2008. On December 31, 2008 (the participant count date for the plan's 2009 premium), John has credit for 988 hours of service and Mary has credit for 1,006 hours of service. For purposes of this section, Mary is considered to have an accrued benefit, and John is considered not to have an accrued benefit. Thus, the plan is considered to have benefit liabilities with respect to Mary, but not John, on December 31, 2008; and Mary, but not John, must be counted as a participant for purposes of computing the plan's 2009 premium.

Example 2. The plan also provides that a participant becomes vested five years after commencing employment and defines a one-year break in service as a service computation period in which less than 500 hours of service is performed. On February 1, 2010, John has an accrued benefit of $18 per month beginning at age 65 based on credit for 1,200 hours of service in the service computation period that began July 1, 2008. However, John has credit for only 492 hours of service in the service computation period that began July 1, 2009. On February 1, 2010, John terminates his employment. On December 31, 2010 (the participant count date for the 2011 premium), John has incurred a one-year break in service, and thus is not counted as a participant for purposes of computing the plan's 2011 premium.

Example 3. On January 1, 2012, the plan is amended to provide that if a vested participant whose accrued benefit has a present value of $5,000 or less leaves employment, the benefit will be immediately cashed out. On December 30, 2013, Jane, who has a vested benefit with a present value of less than $5,000, leaves employment. Because of reasonable administrative delay in determining the amount of the benefit to be paid, the plan does not pay Jane the value of her benefit until January 9, 2014. Under the provisions of this section, Jane is treated as not having an accrued benefit on December 31, 2013 (the participant count date for the 2014 premium), because Jane's benefit is treated as having been paid on December 30, 2013. Thus, Jane is not counted as a participant for purposes of computing the plan's 2014 premium.

Example 4. If the plan amendment had instead provided for cashouts as of the first of the month following termination of employment, and the plan paid Jane the value of her benefit on January 1, 2014, Jane would be treated under the provisions of this section as having an accrued benefit on December 31, 2013, and would thus be counted as a participant for purposes of computing the plan's 2014 premium.

[65 FR 75163, Dec. 1, 2000, as amended at 73 FR 15076, Mar. 21, 2008]

§ 4006.7 Premium rate for certain terminated single-employer plans.

(a) The premium under this section (''termination premium'') applies to a DRA 2005 termination described in § 4007.13 of this chapter.

(b) The amount of the premium under this section that is payable with respect to each applicable 12-month period (as described in § 4007.13 of this chapter) is the number of participants

in the plan, determined as of the day before the termination date, multiplied by the termination premium rate. In general, the termination premium rate is $1,250. However, the termination premium rate is $2,500 for an ''eligible plan'' under section 402(c)(1) of the Pension Protection Act of 2006 (dealing with certain plans of commercial passenger airlines and airline catering services) while an election under section 402(a)(1) of the Pension Protection Act of 2006 (dealing with alternative funding schedules) is in effect for the plan if the plan terminates during the five-year period beginning on the first day of the first applicable plan year (as defined in section 402(c)(2) of that Act) with respect to the plan, unless the Secretary of Labor determines that the plan terminated as a result of extraordinary circumstances such as a terrorist attack or other similar event.

(c) The premium under this section is in addition to any other premium under this part.

(d) See § 4007.13 of this chapter for further rules about termination premiums.

[72 FR 71229, Dec. 17, 2007, as amended at 79 FR 13561, Mar. 11, 2014]

PART 4007—PAYMENT OF PREMIUMS

Sec.
4007.1 Purpose and scope.
4007.2 Definitions.
4007.3 Filing requirement; method of filing.
4007.4 Where to file.
4007.5 Date of filing.
4007.6 Computation of time.
4007.7 Late payment interest charges.
4007.8 Late payment penalty charges.
4007.9 Coverage for guaranteed basic benefits.
4007.10 Recordkeeping; audits; disclosure of information.
4007.11 Due dates.
4007.12 Liability for single-employer premiums.
4007.13 Premiums for certain terminated single-employer plans.
APPENDIX TO PART 4007—POLICY GUIDELINES ON PREMIUM PENALTIES

AUTHORITY: 29 U.S.C. 1302(b)(3), 1303(a), 1306, 1307.

SOURCE: 61 FR 34020, July 1, 1996, unless otherwise noted.

§ 4007.1 Purpose and scope.

This part, which applies to all plans that are covered by title IV of ERISA, provides procedures for paying the premiums imposed by sections 4006 and 4007 of ERISA. (See part 4006 of this chapter for premium rates and computational rules.)

§ 4007.2 Definitions.

(a) The following terms are defined in § 4001.2 of this chapter: Code, contributing sponsor, ERISA, IRS, notice of intent to terminate, PBGC, plan, plan administrator, plan year, single-employer plan, and termination date.

(b) For purposes of this part, the following terms are defined in § 4006.2 of this chapter: continuation plan, new plan, newly covered plan, participant, participant count, premium funding target, premium payment year short plan year, small plan, and UVB valuation date.

[61 FR 34020, July 1, 1996, as amended at 73 FR 15076, Mar. 21, 2008; 79 FR 13561, Mar. 11, 2014]

§ 4007.3 Filing requirement; method of filing.

(a) *In general.* The estimation, determination, declaration, and payment of premiums must be made in accordance with the premium instructions on PBGC's Web site (*www.pbgc.gov*). Subject to the provisions of § 4007.13, the plan administrator of each covered plan is responsible for filing prescribed premium information and payments. Each required premium payment and related information, certified as provided in the premium instructions, must be filed by the applicable due date specified in this part in the manner and format prescribed in the instructions.

(b) *Electronic filing.* Information must be filed electronically except to the extent that PBGC grants an exemption for good cause in appropriate circumstances. (The requirement to file electronically applies to all estimated and final flat-rate and variable-rate premium filings (including amended filings) but does not apply to information filed to comply with a PBGC request under (4007.10(c) (dealing with

providing record information in connection with a premium compliance review).) Unless an exemption applies, filing on paper or in any other manner other than by a prescribed electronic filing method does not satisfy the requirement to file. Failure to file electronically as required is subject to penalty under ERISA section 4071.

[71 FR 31081, June 1, 2006, as amended at 72 FR 71229, Dec. 17, 2007; 73 FR 15076, Mar. 21, 2008; 79 FR 13561, Mar. 11, 2014]

§ 4007.4 Where to file.

See § 4000.4 of this chapter for information on where to file.

[71 FR 31081, June 1, 2006]

§ 4007.5 Date of filing.

The PBGC applies the rules in subpart C of part 4000 of this chapter to determine the date that a submission under this part was filed with the PBGC.

[68 FR 61352, Oct. 28, 2003]

§ 4007.6 Computation of time.

The PBGC applies the rules in subpart D of part 4000 of this chapter to compute any time period under this part. However, for purposes of determining the amount of a late payment interest charge under § 4007.7 or of a late payment penalty charge under § 4007.8, the rule in § 4000.43(a) of this chapter governing periods ending on weekends or Federal holidays does not apply.

[68 FR 61352, Oct. 28, 2003]

§ 4007.7 Late payment interest charges.

(a) If any premium payment due under this part is not paid by the due date prescribed for such payment by this part, an interest charge will accrue on the unpaid amount at the rate imposed under section 6601(a) of the Code for the period from the date payment is due to the date payment is made. Late payment interest charges are compounded daily.

(b) With respect to any PBGC bill for a premium underpayment and/or interest thereon, interest will accrue only until the date of the bill if the premium underpayment and interest billed are paid within 30 days after the date of the bill.

[61 FR 34020, July 1, 1996, as amended at 72 FR 71229, Dec. 17, 2007; 73 FR 15076, Mar. 21, 2008]

§ 4007.8 Late payment penalty charges.

(a) *Penalty charge*. Subject to the provisions of § 4007.13, if any premium payment due under this part is not paid by the due date under this part, PBGC will assess a late payment penalty charge as determined under this paragraph (a), except to the extent the charge is waived under paragraphs (b) through (g) of this section. The amount determined under this paragraph (a) will be based on the number of months (counting any portion of a month as a whole month) from the due date to the date of payment and is subject to a floor of $25 (or, if less, the amount of the unpaid premium). The penalty rate is—

(1) For any amount of unpaid premium that is paid on or before the date PBGC issues a written notice to any person liable for the premium that there is or may be a premium delinquency (for example, a premium bill, a letter initiating a premium compliance review, a notice of filing error in premium determination, or a letter questioning a failure to make a premium filing), 1 percent per month, to a maximum penalty charge of 50 percent of the unpaid premium; or

(2) For any amount of unpaid premium that is paid after that date, 5 percent per month, to a maximum penalty charge of 100 percent of the unpaid premium.

(b) *Hardship waiver*. The PBGC may grant a waiver based upon a showing of substantial hardship as provided in section 4007(b) of ERISA.

(c) Reasonable cause waivers. PBGC will waive all or part of a late payment penalty charge if PBGC determines that there is reasonable cause for the late payment. Policy guidelines for applying the ''reasonable cause'' standard are in §§ 22 through 25 of the Appendix to this part.

(d) *Other waivers*. PBGC may waive all or part of a late payment penalty charge in other circumstances without regard to whether there is reasonable cause. Policy guidelines for waivers without reasonable cause are in

§ 21(b)(1), (b)(3), (b)(4), and (b)(5) of the Appendix to this part.

(e) *Grace period.* With respect to any PBGC bill for a premium underpayment, the PBGC will waive any late payment penalty charge accruing after the date of the bill, provided the premium underpayment is paid within 30 days after the date of the bill.

(f) *Filings not more than 7 days late.* PBGC will waive premium payment penalties that arise solely because premium payments are late by not more than seven calendar days, as described in this paragraph (f). In applying this waiver, PBGC will assume that each premium payment with respect to a plan year was made seven calendar days before it was actually made. All other rules will then be applied as usual. If the result of this procedure is that no penalty would arise for that plan year, then any penalty that would apply on the basis of the actual payment date(s) will be waived.

(g) *Variable-rate premium penalty relief.* PBGC will waive the penalty on any underpayment of the variable-rate premium for the period that ends on the earlier of the date the reconciliation filing is due or the date the reconciliation filing is made if, by the date the variable-rate premium for the premium payment year is due under § 4007.11(a)(1),—

(1) The plan administrator reports—

(i) The fair market value of the plan's assets for the premium payment year, and

(ii) An estimate of the plan's premium funding target for the premium payment year that is certified by an enrolled actuary to be a reasonable estimate that takes into account the most current data available to the enrolled actuary and that has been determined in accordance with generally accepted actuarial principles and practices; and

(2) The plan administrator pays at least the amount of variable-rate premium determined from the value of assets and estimated premium funding target so reported.

[64 FR 66385, Nov. 26, 1999, as amended at 65 FR 75164, Dec. 1, 2000; 71 FR 66869, Nov. 17, 2006; 72 FR 71229, Dec. 17, 2007; 73 FR 15076, Mar. 21, 2008; 79 FR 350, Jan. 3, 2014; 79 FR 13561, Mar. 11, 2014]

§ 4007.9 Coverage for guaranteed basic benefits.

(a) The failure to pay the premiums due under this part will not result in a plan's loss of coverage for basic benefits guaranteed under section 4022(a) or 4022A(a) of ERISA.

(b) The payment of the premiums imposed by this part will not result in coverage for basic benefits guaranteed under section 4022(a) or 4022A(a) of ERISA for plans not covered under title IV of ERISA.

[61 FR 34020, July 1, 1996, as amended at 72 FR 71229, Dec. 17, 2007]

§ 4007.10 Recordkeeping; audits; disclosure of information.

(a) *Retention of records to support premium payments*—(1) *In general.* The designated recordkeeper under paragraph (a)(3) of this section must retain, for a period of six years after the premium due date, all plan records that are necessary to establish, support, and validate the amount of any premium required to be paid and any information required to be reported (''premium-related information'') under this part and part 4006 of this chapter and under PBGC's premium filing instructions. Records that must be retained pursuant to this paragraph include, but are not limited to, records that establish the number of plan participants and that support and demonstrate the calculation of unfunded vested benefits.

(2) *Electronic recordkeeping.* A designated recordkeeper may use electronic media for maintenance and retention of records required by this part in accordance with the requirements of subpart E of part 4000 of this chapter.

(3) *Designated recordkeepers.*

(i) With respect to the flat-rate and variable-rate premiums described in § 4006.3 of this chapter, the plan administrator is the designated recordkeeper.

(ii) With respect to the premium for certain terminated single-employer plans described in § 4006.7 of this chapter, each person who was a contributing sponsor of such a plan, or was a member of a contributing sponsor's controlled group, as of the day before the plan's termination date is a designated recordkeeper.

(4) *Records.* (i) Records that must be retained pursuant to paragraph (a)(1) of

this section include, but are not limited to, records prepared by the plan administrator, a plan sponsor, an employer required to contribute to the plan with respect to its employees, an enrolled actuary performing services for the plan, or an insurance carrier issuing any contract to pay benefits under the plan.

(ii) For purposes of this section, ''records'' include, but are not limited to, plan documents; participant data records; personnel and payroll records; actuarial tables, worksheets, and reports; records of computations, projections, and estimates; benefit statements, disclosures, and applications; financial and tax records; insurance contracts; records of plan procedures and practices; and any other records, whether in written, electronic, or other format, that are relevant to the determination of the amount of any premium required to be paid or any premium-related information required to be reported.

(iii) When a record to be produced for PBGC inspection and copying exists in more than one format, it must be produced in the format specified by PBGC.

(b) *PBGC audit*—(1) *In general.* In order to determine the correctness of any premium paid or premium-related information reported or to determine the amount of any premium required to be paid or any premium-related information required to be reported, PBGC may—

(i) Audit any premium filing,

(ii) Inspect and copy any records that are relevant to the determination of the amount of any premium required to be paid and any premium-related information required to be reported, including (without limitation) the records described in paragraph (a) of this section, and

(iii) Require disclosure of any manual or automated system or process used to determine any premium paid or premium-related information reported, and demonstration of its operation in order to permit PBGC to determine the effectiveness of the system or process and the reliability of information produced by the system or process.

(2) *Deficiencies found on audit.* If, upon audit, PBGC determines that a premium due under this part was underpaid, late payment interest and penalty charges will apply as provided for in this part. If, upon audit, PBGC determines that required information was not timely and accurately reported, a penalty may be assessed under ERISA section 4071.

(3) *Insufficient records.* In determining the premium due, if, in the judgment of PBGC, a plan's records fail to establish the participant count or (for a single-employer plan) the plan's unfunded vested benefits for any premium payment year, PBGC may rely on data it obtains from other sources (including the IRS and the Department of Labor) for presumptively establishing the participant count and/or unfunded vested benefits for premium computation purposes.

(c) *Providing record information*—(1) *In general.* A designated recordkeeper must make the records retained pursuant to paragraph (a) of this section available to PBGC promptly upon request for inspection and photocopying (or, for electronic records, inspection, electronic copying, and printout) at the location where they are kept (or another, mutually agreeable, location). If PBGC requests in writing that records retained pursuant to paragraph (a) of this section, or information in such records, be submitted to PBGC, the designated recordkeeper must submit the requested materials to PBGC either electronically or by hand, mail, or commercial delivery service within 45 days of the date of PBGC's request therefor, or by a different time specified in the request.

(2) *Extension.* Except as provided in paragraph (c)(3) of this section, a designated recordkeeper may automatically extend the period described in paragraph (c)(1) by submitting a certification to the PBGC prior to the expiration of that time period. The certification shall—

(i) Specify a date to which the time period described in paragraph (c)(1) is extended that is no more than 90 days from the date of the PBGC's written request for information; and

(ii) Contain a statement, certified to by the designated recordkeeper under penalty of perjury (18 U.S.C. §1001),

that, despite reasonable efforts, the additional time is necessary to comply with the PBGC's request.

(3) *Shortening of time period.* The PBGC may in its discretion shorten the time period described in paragraph (c)(1) or (c)(2) of this section where it determines that the interests of PBGC may be prejudiced by a delay in the receipt of the information (e.g., where collection of unpaid premiums (or any associated interest or penalties) would otherwise be jeopardized). If the PBGC shortens the time period described in paragraph (c)(1), no extension is available under paragraph (c)(2).

(d) *Address and timeliness.* Information required to be submitted under paragraph (c) of this section shall be submitted to the address specified in the PBGC's request. The timeliness of a submission shall be determined in accordance with §§ 4007.5 and 4007.6.

[61 FR 34020, July 1, 1996, as amended at 62 FR 36663, July 9, 1997; 68 FR 61352, Oct. 28, 2003; 72 FR 71229, Dec. 17, 2007; 73 FR 15077, Mar. 21, 2008]

§ 4007.11 Due dates.

(a) *In general.* In general:

(1) The flat-rate and variable-rate premium filing due date is the fifteenth day of the tenth calendar month that begins on or after the first day of the premium payment year.

(2) If the variable-rate premium paid by the premium filing due date is estimated as described in § 4007.8(g)(1)(ii), a reconciliation filing and any required variable-rate premium payment must be made by the end of the sixth calendar month that begins on or after the premium filing due date.

(3) *Small plan transition rule.* Notwithstanding paragraph (a)(1) of this section, if a plan had fewer than 100 participants for whom flat-rate premiums were payable for the plan year preceding the last plan year that began before 2014, then the plan's due date for the first plan year beginning after 2013 is the fifteenth day of the fourteenth calendar month that begins on or after the first day of that plan year.

(b) *Plans that change plan years.* For a plan that changes its plan year, the flat-rate and variable-rate premium filing due date for the short plan year is as specified in paragraph (a) of this section. For the plan year that follows a short plan year, the due date is the later of —

(1) The due date specified in paragraph (a) of this section, or

(2) 30 days after the date on which the amendment changing the plan year was adopted.

(c) *New and newly covered plans.* For a new plan or newly covered plan, the flat-rate and variable-rate premium filing due date for the first plan year of coverage is the latest of—

(1) The due date specified in paragraph (a) of this section, or

(2) 90 days after the date of the plan's adoption, or

(3) 90 days after the date on which the plan became covered by title IV of ERISA, or

(4) In the case of a small plan that is a continuation plan, 90 days after the plan's UVB valuation date.

(d) *Terminating plans.* For a plan that terminates in a standard termination, the flat-rate and variable-rate premium filing due date for the plan year in which all plan assets are distributed pursuant to the plan's termination is the earlier of—

(1) The due date specified in paragraph (a) of this section, or

(2) The date when the post-distribution certification under § 4041.29 of this chapter is filed.

(e) *Continuing obligation to file.* The obligation to make flat-rate and variable-rate premium filings and payments under this part continues through the plan year in which all plan assets are distributed pursuant to a plan's termination or in which a trustee is appointed under section 4042 of ERISA, whichever occurs earlier.

[79 FR 13561, Mar. 11, 2014]

§ 4007.12 Liability for single-employer premiums.

(a) The designation under this part of the plan administrator as the person required to make flat-rate and variable-rate premium filings and payments under this part for a single-employer plan is a procedural requirement only and does not alter the liability for premium payments imposed by section 4007 of ERISA. Pursuant to section 4007(e) of ERISA, both the plan administrator and the contributing sponsor

of a single-employer plan are liable for flat-rate and variable-rate premium payments, and, if the contributing sponsor is a member of a controlled group, each member of the controlled group is jointly and severally liable for the required premiums. Any entity that is liable for required premiums is also liable for any interest and penalties assessed with respect to such premiums.

(b) After a plan administrator issues (pursuant to section 4041(a)(2) of ERISA) the first notice of intent to terminate in a distress termination under section 4041(c) of ERISA or PBGC issues a notice of determination under section 4042(a) of ERISA, the obligation to pay the premiums (and any interest or penalties thereon) imposed by ERISA and this part for a single-employer plan shall be an obligation solely of the contributing sponsor and the members of its controlled group, if any.

(Approved by the Office of Management and Budget under control number 1212–0009)

[61 FR 34020, July 1, 1996, as amended at 72 FR 71229, Dec. 17, 2007; 79 FR 13562, Mar. 11, 2014]

§ 4007.13 Premiums for certain terminated single-employer plans.

(a) *Applicability*—(1) *In general*. This section applies where there is a ''DRA 2005 termination'' of a plan. Subject to paragraph (a)(2) of this section, there is a DRA 2005 termination where a single-employer plan's termination date is after 2005 and either—

(i) The plan terminates under section 4042 of ERISA, or

(ii) The plan terminates under section 4041(c) of ERISA and at least one contributing sponsor or member of a contributing sponsor's controlled group meets the requirements of section 4041(c)(2)(B)(ii) or (iii) of ERISA.

(2) *Plans terminated during reorganization proceedings*. Except as provided in paragraph (a)(3) of this section, a DRA 2005 termination of a plan does not occur where as of the plan's termination date—

(i) A bankruptcy proceeding has been filed by or against any person that was a contributing sponsor of the plan on the day before the plan's termination date or that was on that day a member of any controlled group of which any such contributing sponsor was a member,

(ii) The proceeding is pending as a reorganization proceeding under chapter 11 of title 11, United States Code (or under any similar law of a State or political subdivision of a State),

(iii) The person has not been discharged from the proceeding, and

(iv) The proceeding was filed before October 18, 2005.

(3) *Special rule for certain airline-related plans*. Paragraph (a)(2) of this section does not apply to an ''eligible plan'' under section 402(c)(1) of the Pension Protection Act of 2006 (dealing with certain plans of commercial passenger airlines and airline catering services) while an election under section 402(a)(1) of the Pension Protection Act of 2006 (dealing with alternative funding schedules) is in effect for the plan.

(4) *Termination premium*. A premium as described in § 4006.7 of this chapter is payable to PBGC with respect to a DRA 2005 termination each year for three years after the termination (the ''termination premium'').

(b) *Filing requirements; method of filing*. Notwithstanding § 4007.3, in the case of a DRA 2005 termination of a plan, each person that was a contributing sponsor of the plan on the day before the plan's termination date or that was on that day a member of any controlled group of which any such contributing sponsor was a member is responsible for filing prescribed termination premium information and payments. Any such person may file on behalf of all such persons.

(c) *Late payment penalty charges*. Notwithstanding § 4007.8(a), if any required termination premium payment is not filed by the due date under paragraph (d) of this section, PBGC may assess a late payment penalty charge based on the facts and circumstances, subject to waiver under § 4007.8(b), (c), (d), or (e). The charge will not exceed the amount of termination premium not timely filed.

(d) *Due dates*. Notwithstanding § 4007.11, the due date for the termination premium is the 30th day of each of three applicable 12-month periods. The three applicable 12-month periods

with respect to a DRA 2005 termination of a plan are—

(1) *First applicable 12-month period.* Except as provided in paragraph (e) or (f) of this section, the period of 12 calendar months beginning with the first calendar month following the calendar month in which occurs the plan's termination date, and

(2) *Subsequent applicable 12-month periods.* Each of the first two periods of 12 calendar months that immediately follow the first applicable 12-month period.

(e) *Certain reorganization cases.* (1) This paragraph (e) applies with respect to a DRA 2005 termination of a plan if the conditions in both paragraph (e)(2) and paragraph (e)(3) of this section are satisfied.

(2) The condition of this paragraph (e)(2) is that either—

(i) The plan terminates under section 4042 of ERISA, or

(ii) The plan terminates under section 4041(c) of ERISA and at least one contributing sponsor or member of a contributing sponsor's controlled group meets the requirements of section 4041(c)(2)(B)(ii) of ERISA.

(3) The condition of this paragraph (e)(3) is that as of the plan's termination date—

(i) A bankruptcy proceeding has been filed by or against any person that was a contributing sponsor of the plan on the day before the plan's termination date or that was on that day a member of any controlled group of which any such contributing sponsor was a member,

(ii) The proceeding is pending as a reorganization proceeding under chapter 11 of title 11, United States Code (or under any similar law of a State or political subdivision of a State), and

(iii) The person has not been discharged from the proceeding.

(4) If this paragraph (e) applies with respect to a DRA 2005 termination of a plan, then except as provided in paragraph (f) of this section, the first applicable 12-month period with respect to the plan is the period of 12 calendar months beginning with the first calendar month following the calendar month in which occurs the earliest date when, for every person that was a contributing sponsor of the plan on the day before the plan's termination date, or that was on that day a member of any controlled group of which any such contributing sponsor was a member, either—

(i) There is not pending any bankruptcy proceeding that was filed by or against such person and that was, as of the plan's termination date, a reorganization proceeding under chapter 11 of title 11, United States Code (or under any similar law of a State or political subdivision of a State), or

(ii) The person has been discharged in any such proceeding, or

(iii) The person no longer exists.

(f) *Plan termination date in past when set.* If a plan's termination date is in the past when it is established by agreement or court action as described in section 4048 of ERISA, then the first applicable 12-month period for determining the due dates of the termination premium begins with the later of—

(1) The first calendar month following the calendar month in which the termination date is established by agreement or court action as described in section 4048 of ERISA, or

(2) The first calendar month specified in paragraph (d)(1) of this section or (if paragraph (e) of this section applies) paragraph (e)(4) of this section.

(g) *Liability for termination premiums.* In the case of a DRA 2005 termination of a plan, each person that was a contributing sponsor of the plan on the day before the plan's termination date, or that was on that day a member of any controlled group of which any such contributing sponsor was a member, is jointly and severally liable for termination premiums with respect to the plan.

[72 FR 71230, Dec. 17, 2007, as amended at 79 FR 13562, Mar. 11, 2014]

APPENDIX TO PART 4007—POLICY GUIDELINES ON PREMIUM PENALTIES

Sec.

GENERAL PROVISIONS

1 What is the purpose of this Appendix?
2 What defined terms are used in this Appendix?
3 What is the purpose of a premium penalty?

4 What information is in this Appendix and how is it organized?

PREMIUM PENALTY ASSESSMENT

[Reserved]

WAIVER STANDARDS

21 What are the standards for waiving a premium penalty?
22 What is ''reasonable cause''?
23 What kinds of facts does PBGC consider in determining whether there is reasonable cause for a failure to pay a premium?
24 What are some situations that might justify a ''reasonable cause'' waiver?
25 What are some situations that might justify a partial ''reasonable cause'' waiver?

PROCEDURES

[Reserved]

GENERAL PROVISIONS

1 What is the purpose of this Appendix?

This appendix sets forth principles and guidelines that we intend to follow in assessing, reviewing, and waiving premium penalties. However, this is only general policy guidance. Our action in each case is guided by the facts and circumstances of the case.

2 What defined terms are used in this Appendix?

The following terms are defined in part 4001 of this chapter: contributing sponsor, ERISA, PBGC, person, plan, and plan administrator. In addition, in this appendix:

(a) *Premium penalty* means a penalty under ERISA section 4007 and under this part for failing to pay a premium in full and on time.

(b) *Waiver* means reduction or elimination of a premium penalty that is being or has been assessed.

(c) *We* means PBGC.

(d) *You* means, according to the context,—

(1) A plan administrator, contributing sponsor, or other person, if—

(i) The person's action or inaction may be the basis for a premium penalty assessment,

(ii) The person may be required to pay the premium penalty, or

(iii) The person is requesting review of the premium penalty; or

(2) An employee or agent of, or advisor to, any of these persons.

3 What is the purpose of a premium penalty?

The basic purpose of a premium penalty is to encourage you to pay premiums in full and on time and to voluntarily self-correct any failure to do so.

4 What information is in this Appendix and how is it organized?

This Appendix has four divisions:

(a) *General provisions*. The General Provisions division (§§1–4) tells you the purpose and organization of the Appendix, the purpose of a premium penalty, and the definitions of terms used in the Appendix.

(b) *Premium penalty assessment*. The Premium Penalty Assessment division is reserved.

(c) *Waiver standards*. The Waiver Standards division (§§21–25) explains the principles that PBGC follows in waiving premium penalties.

(1) *Reasonable cause*. We waive premium penalties for reasonable cause, as explained in §§22–25.

(2) *Other waivers*. We also waive premium penalties in some other circumstances, such as mistake of law, as explained in §21.

(d) *Procedures*. The Procedures division is reserved.

PREMIUM PENALTY ASSESSMENT

[Reserved]

WAIVER STANDARDS

21 What are the standards for waiving a premium penalty?

(a) *Facts and circumstances*. In deciding whether to waive a premium penalty in whole or in part under paragraph (b), we consider the facts and circumstances of each case.

(b) *Waivers*.

(1) *Provisions of law*. We waive all or part of a premium penalty if a statute or regulation requires that we do so. For example, ERISA section 4007(b) and §4007.8 of this part provide for a waiver in certain circumstances involving business hardship, and §4007.8 of this part also provides , and for a waiver of a premium penalty that accrues after the date of a bill for a premium underpayment if you pay the premium owed within 30 days after the date of the bill, and for waivers in certain cases where you pay not more than a week late or where you estimate the variable-rate premium and then timely correct any underpayment.

(2) *Reasonable cause*. We waive a premium penalty if you show reasonable cause for a failure to pay a premium in full and on time. See §§22 through 25 for guidelines on ''reasonable cause'' waivers. If there is reasonable cause for only part of a failure to pay a premium, we waive the premium penalty only for that part.

(3) *Legal errors*. We may waive all or part of a premium penalty if the failure to pay a premium in full and on time that gives rise to the premium penalty results from certain kinds of legal errors.

(i) *Erroneous legal interpretation—disclosed*. If a failure to pay a premium in full and on time results from your reliance on an erroneous interpretation of the law, we waive a premium penalty that arises from the failure if you promptly and adequately call our attention to the interpretation and the relevant facts, and the erroneous interpretation is not frivolous. If the interpretation affects

a filing that you make with us, you should call our attention to the interpretation in writing with the filing. If you rely on the interpretation to justify not making a filing with us, you should call our attention to the interpretation in writing by the time prescribed for the filing not made.

(ii) *Erroneous legal interpretation—undisclosed.* If a failure to pay a premium in full and on time results from your reliance on an erroneous interpretation of the law, and you do not promptly and adequately call our attention to the interpretation and the relevant facts, we may nevertheless waive a premium penalty if the weight of authority supporting the interpretation is substantial in relation to the weight of opposing authority and it is reasonable for you to rely on the interpretation.

(iii) *Recent change in the law.* We may waive all or part of a premium penalty if the law changes shortly before the date a premium payment is due and the premium payment that you make by the due date would have been correct under the law as in effect before the change. In determining whether and to what extent to grant a waiver in a case of this kind, we consider such factors as the length of time between the change in the law and the premium due date, the nature and timing of any publicity given to the change in the law, the complexity of the legal issues, and your general familiarity with those issues.

(4) *Pendency of PBGC procedures.* We may waive all or a part of a premium penalty that is attributable to the pendency of PBGC review or other procedures. For example:

(i) If you request review of a premium penalty, and you make a non-frivolous argument in your request for review that you were not required to pay the premium or that you were, and still are, unable to obtain the information needed to determine the premium, we may waive the portion of the premium penalty that accrues during the review process. If you make such a non-frivolous argument with respect to a portion of the premium, we may apply this principle to that portion.

(ii) We may waive all or a part of a premium penalty if we believe that the pendency of PBGC procedures for identifying a premium delinquency and notifying you of the delinquency contributed to your failure to correct the delinquency more promptly.

(5) *Other circumstances.* We may waive all or part of a premium penalty in other circumstances if we determine that it is appropriate to do so.

(c) *Action or inaction of outside parties.* In some cases an accountant, actuary, lawyer, pension consultant, or other individual or firm that is not part of your organization may assist you in complying with PBGC requirements. If the outside individual's or firm's action, inaction, or advice causes or contributes to a failure to pay a premium in full and on time, we apply our waiver authority as if the outside individual or firm were part of your organization. In the case of an outside individual who is part of a firm, we generally consider both the individual and the firm to be part of your organization.

22 What is "reasonable cause"?

(a) *General rule.* In general, there is ''reasonable cause'' for a failure to pay a premium in full and on time to the extent that—

(1) The failure arises from circumstances beyond your control, and

(2) You could not avoid the failure by the exercise of ordinary business care and prudence.

(b) *Overlooking legal requirements.* Overlooking legal requirements does not constitute reasonable cause.

(c) *Action or inaction of outside parties.* If an accountant, actuary, lawyer, pension consultant, or other individual or firm that is not part of your organization assists you in complying with PBGC requirements, there is generally no reasonable cause for a failure to pay a premium in full and on time that arises from circumstances within the control of the outside individual or firm, or could be avoided by the exercise of ordinary business care and prudence by the outside individual or firm. The fact that you exercised care and prudence in selecting and monitoring the outside individual or firm is not a basis for a reasonable cause waiver.

(d) *Size of organization.* If an organization or one or more of its employees is responsible for taking action, the size of the organization may affect what ordinary business care and prudence would require. For example, ordinary business care and prudence would typically require a larger organization to establish more comprehensive backup procedures than a smaller organization for dealing with situations such as computer failure, the loss of important records, and the inability of an individual to carry out assigned responsibilities. Thus, there may be reasonable cause for a small organization's failure to pay a premium in full and on time even though, if the organization were larger, the exercise of ordinary business care and prudence would have avoided the failure.

(e) *Size of premium underpayment.* In general, the larger a premium, the more care and prudence you should use to make sure that you pay it in full and on time. Thus, there may be reasonable cause for a small underpayment even though, under the same circumstances, we would conclude that a larger underpayment could have been avoided by the exercise of ordinary business care and prudence.

(f) *Collection and enforcement.* In determining whether reasonable cause exists, we do not consider either—

(i) The likelihood or cost of collecting the premium penalty, or

(ii) The costs and risks of enforcing the premium penalty by litigation.

23 What kinds of facts does PBGC consider in determining whether there is reasonable cause for a failure to pay a premium?

In determining the extent to which a failure to pay a premium in full and on time arose from circumstances beyond your control and the extent to which you could have avoided the failure by the exercise of ordinary business care and prudence—and thus the extent to which waiver of a premium penalty for reasonable cause is appropriate—we consider facts such as the following:

(a) What event or circumstance caused the underpayment and when the event happened or the circumstance arose. The dates you give should clearly correspond with the underpayment upon which the premium penalty is based.

(b) How that event or circumstance kept you from paying the premium in full and on time. The explanation you give should relate directly to the failure to pay a premium that is the subject of the premium penalty.

(c) Whether you could have anticipated the event or circumstance.

(d) How you responded to the event or circumstance, including what steps you took, and how quickly you took them, to pay the premium and how you conducted other business affairs. Knowing how you responded to the event or circumstance may help us determine what degree of business care and prudence you were capable of exercising during that period and thus whether the failure to pay the premium could or could not have been avoided by the exercise of ordinary business care and prudence.

24 What are some situations that might justify a "reasonable cause" waiver?

The following examples illustrate some of the reasons often given for failures to pay premiums for which we may assess penalties. The situation described in each example may constitute reasonable cause, and each example lists factors we consider in determining whether to grant a premium penalty waiver for reasonable cause in a case of that kind.

(a) *An individual with responsibility for taking action was suddenly and unexpectedly absent or unable to act.* We consider such factors as the following: The nature of the event that caused the individual's absence or inability to act, for example, the resignation of the individual or the death or serious illness of the individual or a member of the individual's immediate family; the size of the organization and what kind of backup procedures it had to cope with such events; how close the event was to the deadline that was missed; how abrupt and unanticipated the event was; how the individual's absence or inability to act prevented compliance; how expensive it would have been to comply without the absent individual; whether and how other business operations and obligations were affected; how quickly and prudently a replacement for the absent individual was selected or other arrangements for compliance were made; and how quickly a replacement for the absent individual took appropriate action.

(b) *A fire or other casualty or natural disaster destroyed relevant records or prevented compliance in some other way.* We consider such factors as the following: The nature of the event; how close the event was to the deadline that was missed; how the event caused the failure to pay the premium; whether other efforts were made to get needed information; how expensive it would have been to comply; and how you responded to the event.

(c) *You reasonably relied on erroneous oral or written advice given by a PBGC employee.* We consider such factors as the following: Whether there was a clear relationship between your situation and the advice sought; whether you provided the PBGC employee with adequate and accurate information; and whether the surrounding circumstances should have led you to question the correctness of the advice or information provided.

(d) *You were unable to obtain information, including records and calculations, needed to comply.* We consider such factors as the following: What information was needed; why the information was unavailable; when and how you discovered that the information was not available; what attempts you made to get the information or reconstruct it through other means; and how much it would have cost to comply.

25 What are some situations that might justify a partial "reasonable cause" waiver?

(a) Assume that a fire destroyed the records needed to compute a premium payment. If in the exercise of ordinary business care and prudence it should take you one month to reconstruct the records and pay the premium, but the payment was made two months late, it might be appropriate to waive that part of the premium penalty attributable to the first month the payment was late, but not the part attributable to the second month.

(b) Assume that a plan administrator underpaid the plan's flat-rate premium because of reasonable reliance on erroneous advice from a PBGC employee, and also underpaid the plan's variable-rate premium because the plan actuary used the wrong interest rate. A PBGC audit revealed both errors. PBGC billed the plan for a premium penalty of $5,000—$1,000 for underpayment of the flat-rate premium and $4,000 for underpayment of the variable-rate premium. The plan administrator requested a waiver of the premium penalty. While the erroneous PBGC advice constituted reasonable cause for underpaying the flat-rate premium, there was no

showing of reasonable cause for the error in the variable-rate premium. Therefore, we would waive only the part of the premium penalty based on underpayment of the flat-rate portion of the premium ($1,000).

PROCEDURES

[Reserved]

[71 FR 66869, Nov. 17, 2006, as amended at 79 FR 13562, Mar. 11, 2014]

SUBCHAPTER C—CERTAIN REPORTING AND DISCLOSURE REQUIREMENTS

PART 4010—ANNUAL FINANCIAL AND ACTUARIAL INFORMATION REPORTING

Sec.
4010.1 Purpose and scope.
4010.2 Definitions.
4010.3 Filing requirement.
4010.4 Filers.
4010.5 Information year.
4010.6 Information to be filed.
4010.7 Identifying information.
4010.8 Plan actuarial information.
4010.9 Financial information.
4010.10 Due date and filing with the PBGC.
4010.11 Waivers and extensions.
4010.12 Alternative method of compliance for certain sponsors of multiple employer plans.
4010.13 Confidentiality of information submitted.
4010.14 Penalties.
4010.15 OMB control number.

AUTHORITY: 29 U.S.C. 1302(b)(3), 1310.

SOURCE: 61 FR 34022, July 1, 1996, unless otherwise noted.

§ 4010.1 Purpose and scope.

This part prescribes the requirements for annual filings with PBGC under ERISA section 4010.

[61 FR 34022, July 1, 1996, as amended at 74 FR 11029, Mar. 16, 2009]

§ 4010.2 Definitions.

The following terms are defined in § 4001.2 of this chapter: benefit liabilities, Code, contributing sponsor, controlled group, earliest retirement age at valuation date, ERISA, expected retirement age (XRA), fair market value, IRS, PBGC, person, plan, plan year, and unreduced retirement age (URA).

In addition, for purposes of this part:

At-risk status means, with respect to a plan for a plan year, at-risk status as defined in ERISA section 303(i)(4) and Code section 430(i)(4).

Exempt entity means a person that does not have to file information and about which information does not have to be filed, as described in § 4010.4(c).

Exempt plan means a plan about which actuarial information does not have to be filed, as described in § 4010.8(c).

Fair market value of the plan's assets means the fair market value of the plan's assets at the end of the plan year ending within the filer's information year (determined without regard to any contributions receivable).

Filer means a person who is required to file reports, as described in § 4010.4.

Fiscal year means, with respect to a person, the person's annual accounting period or, if the person has not adopted a closing date, the calendar year.

Funding target means, with respect to a plan for a plan year, the funding target as provided under ERISA section 303(d)(1) and Code section 430(d)(1) determined as of the valuation date for the plan year.

Funding target attainment percentage means, with respect to a plan for a plan year, the funding target attainment percentage as determined under § 4010.4(b) for the plan year.

Information year means the information year determined under § 4010.5.

Valuation date means, with respect to a plan for a plan year, the valuation date as determined under ERISA section 303(g)(2) and Code section 430(g)(2).

[61 FR 34022, July 1, 1996, as amended at 74 FR 11029, Mar. 16, 2009]

§ 4010.3 Filing requirement.

(a) *General*. Except as provided in § 4010.8(c) (relating to exempt plans) and except where one or more waivers under § 4010.11 apply, each filer must submit to PBGC annually, on or before the due date specified in § 4010.10, all information specified in § 4010.6(a) with respect to all members of a controlled group and all plans maintained by members of the filer's controlled group. Under § 4000.3(b) of this chapter, except as otherwise provided by PBGC, the information must be submitted electronically in accordance with the instructions on PBGC's Web site, *http://www.pbgc.gov*.

(b) *Single controlled group submission*. Any filer or other person may submit the information specified in § 4010.6(a)

on behalf of one or more members of a filer's controlled group.

[70 FR 11544, Mar. 9, 2005, as amended at 74 FR 11029, Mar. 16, 2009]

§ 4010.4 Filers.

(a) *General.* A contributing sponsor of a plan and each member of the contributing sponsor's controlled group on the last day of the information year is a filer with respect to an information year (unless exempted under paragraph (c) of this section) if—

(1) For any plan (including an exempt plan) maintained by the members of the contributing sponsor's controlled group on the last day of the information year, the funding target attainment percentage for the plan year ending within the information year is less than 80 percent;

(2) Any member of the controlled group fails to make a required installment or other required payment to a plan and, as a result, the conditions for imposition of a lien described in ERISA section 303(k) and Code section 430(k) have been met during the information year, and the required installment or other required payment is not made within ten days after its due date; or

(3) Any plan maintained by a member of the controlled group has been granted one or more minimum funding waivers under ERISA section 302(c) and Code section 412(c) totaling in excess of $1 million, and as of the end of the plan year ending within the information year, any portion thereof is still outstanding.

(b) *Funding target attainment percentage*—(1) *General.* Except as provided in paragraph (b)(3) of this section, the funding target attainment percentage for a plan for a plan year equals the funding target attainment percentage as provided under ERISA section 303(d)(2) and Code section 430(d)(2) determined as of the valuation date for the plan year.

(2) *Prefunding balance and funding standard carryover balance elections.* For purposes of determining the funding target attainment percentage for a plan for the plan year, prefunding balances and funding standard carryover balances must reflect any elections (or deemed elections) under ERISA section 303(f) and Code section 430(f) that affect the value of such balances as of the beginning of the plan year, regardless of when the elections (or deemed elections) are made.

(3) *Transition rule for plan years beginning before 2008.* For plan years beginning before 2008, the funding target attainment percentage for a plan for the plan year is determined as the fraction (expressed as a percentage), the numerator of which is the net transition plan assets determined under paragraph (b)(4) of this section, and the denominator of which is the plan's current liability determined using the highest rate of interest allowable under Code section 412(l)(7) as of the valuation date for the 2007 plan year.

(4) *Net transition plan assets*—(i) *In general.* Net transition plan assets for purposes of paragraph (b)(3) of this section are equal to plan assets as determined under paragraph (b)(4)(ii) of this section reduced by any credit balance in accordance with paragraph (b)(4)(iii) of this section.

(ii) *Determination of assets.* Plan assets under this paragraph (b)(4)(ii) are determined under Code Section 412(c)(2) as in effect for the plan year beginning in 2007, except that the value of plan assets before subtracting the plan's funding standard account credit balance described in paragraph (b)(4)(iii) of this section can neither be less than 90 percent of the fair market value of plan assets nor greater than 110 percent of the fair market value of plan assets on the valuation date for that plan year.

(iii) *Subtraction of credit balance.* If a plan has a funding standard account credit balance as of the valuation date for the plan year beginning in 2007, that balance is subtracted from the asset value described in paragraph (b)(4)(ii) of this section as of that valuation date.

(iv) *Effect of funding standard carryover balance reduction for 2008 plan year.* Notwithstanding paragraph (b)(4)(iii) of this section, if, for the plan year beginning in 2008, the employer has made an election to reduce some or all of the funding standard carryover balance as of the first day of that year in accordance with ERISA section 303(f) and Code section 430(f), then the present value (determined as of the valuation

date for the plan year beginning in 2007 using the valuation interest rate for that plan year) of the amount so reduced is not treated as part of the funding standard account credit balance when that balance is subtracted from the asset value under paragraph (b)(4)(iii) of this section.

(c) *Exempt entities*. A person is an exempt entity for an information year if the conditions of paragraphs (c)(1) through (4) of this section are satisfied.

(1) The person is not a contributing sponsor of a plan (other than an exempt plan) as of the last day of the information year.

(2) The person has revenue for its fiscal year ending within the controlled group's information year that is five percent or less of the revenue of the person's controlled group for the fiscal year(s) ending within the information year.

(3) The person has annual operating income for the fiscal year ending within the controlled group's information year that is no more than the greater of—

(i) Five percent of the controlled group's annual operating income for the fiscal year(s) ending within the information year, or

(ii) $5 million.

(4) The person has net assets at the end of the fiscal year ending within the controlled group's information year that is no more than the greater of—

(i) Five percent of the controlled group's net assets at the end of the fiscal year(s) ending within the information year, or

(ii) $5 million.

(d) *Transition rule; failure to make required contribution; minimum funding waiver*. For plan years beginning before 2008, where the reference is made in paragraph (a)(2) of this section to ''ERISA section 303(k) and Code section 430(k)'' a reference to ''ERISA section 302(f)(1)(A) and (B) and Code section 412(n)(1)(A) and (B)'' shall apply in its place, and where the reference is made in paragraph (a)(3) of this section to ''ERISA section 302(c) and Code section 412(c)'' a reference to ''ERISA section 303 and Code section 412(d)'' shall apply in its place as those provisions are in effect for plan years beginning before 2008.

(e) *Minimum funding waiver*—(1) *General*. For purposes of § 4010.4(a)(3), a portion of the minimum funding waiver for a plan is considered outstanding unless prior to the plan year ending within the information year the statutory amortization period has ended, or, as of the valuation date for the plan year ending within the information year, the amortization bases are deemed to be reduced to zero pursuant to ERISA section 303(e)(5) and Code section 430(e)(5).

(2) *Example*. Company A sponsors Plan X, which received a minimum funding waiver of $700,000 for the plan year ending December 31, 2004, and another waiver of $500,000 for the plan year ending December 31, 2008. Assume that the amortization bases of the waivers are not reduced to zero pursuant to ERISA section 303(e)(5) and Code section 430(e)(5), and the waivers are therefore outstanding for the full five-year statutory amortization period. Also, assume Company A has a calendar information year. For the 2009 information year, Company A must report under ERISA section 4010. However, for the 2010 information year, Company A, assuming no other obligation to report under ERISA section 4010, is not required to report.

(f) *Certain plans to which special funding rules apply*. The provisions of sections 104, 105, 106, and 402(b) of the Pension Protection Act of 2006, Public Law 109–280 (dealing with plans of certain rural cooperatives, certain plans affected by settlement agreements with PBGC, certain plans of government contractors, and certain frozen plans of commercial passenger airlines and airline caterers), are disregarded for purposes of this part, except that these provisions are taken into account in determining the information to be submitted under § 4010.8(i) of this part (in connection with the actuarial valuation report).

[74 FR 11030, Mar. 16, 2009]

§ 4010.5 Information year.

(a) *Determinations based on information year*. An information year is used under this part to determine which persons are filers (§ 4010.4), what information a filer must submit (§§ 4010.6–4010.9), whether a plan is an exempt

plan (§ 4010.8(c)), and the due date for submitting the information (§ 4010.10(a)).

(b) *General.* Except as provided in paragraph (c) of this section, a person's information year is the fiscal year of the person. A filer is not required to change its fiscal year or the plan year of a plan, to report financial information for any accounting period other than an existing fiscal year, or to report actuarial information for any plan year other than an existing plan year.

(c) *Controlled group members with different fiscal years*— If members of a controlled group (disregarding any exempt entity) report financial information on the basis of different fiscal years, the information year is the calendar year. (If any two members of the controlled group report financial information on the basis of different fiscal years, the determination of whether an entity is an exempt entity is based on a calendar year information year for purposes of this paragraph (c) and § 4010.4(c).)

(d) *Examples.* The following examples illustrate the rule in paragraph (c) of this section.

(1) *Example 1.* Companies A and B are the only members of the same controlled group, and both are contributing sponsors to nonexempt plans. Company A has a July 1 fiscal year, and Company B has an October 1 fiscal year. The information year is the calendar year. Company A's financial information with respect to its fiscal year ending June 30, 2009, and Company B's financial information with respect to its fiscal year ending September 30, 2009, must be submitted to the PBGC following the end of the 2009 calendar year information year.

(2) *Example 2.* The facts are the same as in Example 1 except that Company B is not a contributing sponsor of a plan and would be an exempt entity using the calendar year as the information year. Because Company B is an exempt entity based on a calendar year information year, it is excluded when determining the information year. Thus, the information year is the July 1 fiscal year. Note that Company B is an exempt entity even if it would not be exempt based on the July information year.

(3) *Example 3.* The facts are the same as in Example 2 except that Company B would not be an exempt entity using the calendar year information year but would be exempt based on an information year that is the July 1 fiscal year. Since Company B is not exempt based on a calendar year information year, it may not be excluded when determining the information year. Therefore, the information year is the calendar year and Company B is not an exempt entity.

(e) *Special rules for certain plan years.* If a plan maintained by the members of the contributing sponsor's controlled group has two plan years that end in the information year or has no plan year that ends in the information year, the last plan year ending on or immediately before the end of information year is deemed to be the plan year ending within the information year.

[61 FR 34022, July 1, 1996, as amended at 70 FR 11544, Mar. 9, 2005; 74 FR 11031, Mar. 16, 2009]

§ 4010.6 Information to be filed.

(a) *General.* (1) *Current filers.* A filer must submit the information specified in § 4010.7 (identifying information), § 4010.8 (plan actuarial information) and § 4010.9 (financial information) with respect to each member of the filer's controlled group and each plan maintained by any member of the filer's controlled group, and any other information relating to the information specified in §§ 4010.7 through 4010.9, as specified in the instructions on PBGC's Web site, *http://www.pbgc.gov.*

(2) *Previous filers.* If a filer for the immediately preceding information year is not required to file for the current information year, the filer must submit information, in accordance with the instructions on PBGC's Web site, *http://www.pbgc.gov*, demonstrating why a filing is not required for the current information year.

(b) *Additional information.* By written notification, PBGC may require any filer to submit additional actuarial or financial information that is necessary to determine plan assets and liabilities for any period through the end of the filer's information year, or the financial status of a filer for any period

through the end of the filer's information year (including information on exempt entities and exempt plans). The information must be submitted within ten days after the date of the written notification or by a different time specified therein.

(c) *Previous submissions.* If any required information has been previously submitted to PBGC, a filer may incorporate this information into the required submission by referring to the previous submission.

[61 FR 34022, July 1, 1996, as amended at 70 FR 11544, Mar. 9, 2005; 74 FR 11031, Mar. 16, 2009]

§ 4010.7 Identifying information.

(a) *Filers.* Each filer is required to provide, in accordance with the instructions on PBGC's Web site, *http://www.pbgc.gov*, the following identifying information with respect to each member of the filer's controlled group (excluding exempt entities)—

(1) *Current members.* For an entity that is a member of the controlled group as of the end of the filer's information year—

(i) The name, address, and telephone number of the entity and the legal relationships with other members of the controlled group (for example, parent, subsidiary);

(ii) The nine-digit Employer Identification Number (EIN) assigned by the IRS to the entity (or if there is no EIN for the entity, an explanation); and

(iii) If the entity became a member of the controlled group during the information year, the date the entity became a member of the controlled group; and

(2) *Former members.* For any entity that ceased to be a member of the controlled group during the filer's information year, the date the entity ceased to be a member of the controlled group and the identifying information required by paragraph (a)(1) of this section as of the day before the entity left the controlled group.

(b) *Plans.* Each filer is required to provide, in accordance with the instructions on PBGC's Web site, *http://www.pbgc.gov*, the following identifying information with respect to each plan (including exempt plans) maintained by any member of the filer's controlled group (including exempt entities)—

(1) *Current plans.* For a plan that is maintained by the controlled group as of the last day of the filer's information year—

(i) The name of the plan;

(ii) The EIN and the three-digit Plan Number (PN) assigned by the contributing sponsor to the plan (or if there is no EIN or PN for the plan, an explanation);

(iii) If the EIN or PN of the plan has changed during the filer's information year, the previous EIN or PN and an explanation;

(iv) If the plan was not maintained by the controlled group immediately before the filer's information year, the date the plan was first maintained by the controlled group during the information year;

(v) If, as of any day during the information year, the plan was frozen (for eligibility or benefit accrual purposes), a description of the date and the nature of the freeze (e.g., service is frozen but pay is not); and

(vi) In the case of a multiple employer plan, a list of the contributing sponsors as of the end of the plan year ending within the filer's information year, including the name, employer identification number, contact information, fiscal year, and a statement as to whether each contributing sponsor is a publicly-traded company; and

(2) *Former plans.* For a plan that ceased to be maintained by the controlled group during the filer's information year, the date the plan ceased to be so maintained, identification of the controlled group currently maintaining the plan (if applicable), and the identifying information required by paragraph (b)(1) of this section as of the day before that date.

[70 FR 11544, Mar. 9, 2005, as amended at 74 FR 11031, Mar. 16, 2009]

§ 4010.8 Plan actuarial information.

(a) *Required information.* Except as provided elsewhere in this part, for each plan (other than an exempt plan) maintained by any member of the filer's controlled group, each filer is required to provide, in accordance with the instructions on PBGC's Web site,

http://www.pbgc.gov, the following actuarial information determined (except as specified below) as of the end of plan year ending within the filer's information year—

(1) The number of—

(i) Retired participants and beneficiaries receiving payments,

(ii) Terminated vested participants, and

(iii) Active participants;

(2) The fair market value of the plan's assets (excluding any contributions received after year-end);

(3) The amount of benefit liabilities under the plan, setting forth separately the amount of the liabilities attributable to retired participants and beneficiaries receiving payments, terminated vested participants, and active participants, determined, for this purpose in accordance with paragraph (d) of this section;

(4) A description of the actuarial assumptions used to determine the benefit liabilities in paragraph (a)(3) of this section;

(5) The funding target (as of the valuation date) for the plan year ending within the information year determined in accordance with ERISA section 303(i) and Code section 430(i) as if the plan had been in at-risk status for a consecutive period of at least five plan years;

(6) The funding target attainment percentage (as of the valuation date) for the plan year ending within the information year;

(7) The adjusted funding target attainment percentage as defined in ERISA section 206(g)(9)(B) and Code section 436(j)(2) for the plan year ending within the information year;

(8) Whether the plan, at any time during the plan year, was subject to any of the limitations described in ERISA section 206(g) and Code section 436, and, if so, which limitations applied, when such limitations applied, and when (if applicable) they were lifted;

(9) Whether a required installment or other required payment to the plan was not made, and, as a result, a lien described in ERISA section 303(k) and Code section 430(k) was triggered during the information year, and the required installment or other required payment was not made within ten days after its due date;

(10) Whether any portion of the total minimum funding waiver(s) in excess of $1 million granted with respect to such plan is outstanding;

(11) A copy of the actuarial valuation report for the plan year ending within the filer's information year that contains or is supplemented by the following information for that plan year—

(i) The funding target calculated pursuant to ERISA section 303 without regard to subsection 303(i)(1) (and Code section 430 without regard to subsection 430(i)(1)), setting forth separately the value of the liabilities attributable to retirees and beneficiaries receiving payment, terminated vested participants, and active participants (showing vested and nonvested benefits separately);

(ii) A summary of the actuarial assumptions and methods used for purposes of ERISA section 303 and Code section 430, including the form of payment and benefit commencement date assumptions for all active and deferred vested participants not yet receiving benefits, information on how lump sums are valued (for plans that provide lump sums other than *de minimis* lump sums), and any changes in those assumptions and methods since the previous valuation and the justifications for such changes.

(iii) The effective interest rate (as defined in ERISA section 303(h)(2)(A) and Code section 430(h)(2)(A));

(iv) The target normal cost calculated pursuant to ERISA section 303 without regard to subsection 303(i)(2) (and Code section 430 without regard to subsection 430(i)(2));

(v) For the plan year and each of the four preceding plan years, a statement as to whether the plan was in at-risk status for that plan year;

(vi) In the case of a plan that is in at-risk status, the target normal cost calculated pursuant to ERISA section 303 and Code section 430 as if the plan has been in at-risk status for five consecutive years;

(vii) The value of the plan's assets (reflecting any averaging method) as of the valuation date and the fair market value of the plan's assets as of the valuation date;

(viii) The funding standard carryover balance and the prefunding balance (maintained pursuant to ERISA section 303(f)(1) and Code section 430(f)(1)) as of the beginning of the plan year and a summary of any changes in such balances in the past year (e.g., amounts used to offset the minimum funding requirement, amounts reduced in accordance with any elections under ERISA section 303(f)(5) and Code section 430(f)(5), interest credited to such balances, and excess contributions used to increase such balances);

(ix) A list of amortization bases (shortfall and waiver) under ERISA section 303 and Code section 430, including the year each base was established, the original amount, the installment amount, and the remaining balance at the beginning of the plan year;

(x) An age/service scatter for active participants including average compensation information for pay-related plans and average account balance information for hybrid plans presented in a format similar to that described in the instructions to Schedule SB of the Form 5500;

(xi) Expected disbursements (benefit payments and expenses) during the plan year;

(xii) A summary of the principal eligibility and benefit provisions on which the valuation of the plan was based (and any changes to those provisions since the previous valuation), along with descriptions of any benefits not included in the valuation, any significant events that occurred during the plan year, and the plan's early retirement factors; in the case of a plan that provides lump sums, other than de minimis lump sums, the summary must include information on how annuity benefits are converted to lump sum amounts (e.g., whether early retirement subsidies are reflected); and

(xiii) Any other similar information as specified in instructions on PBGC's Web site, *http://www.pbgc.gov;* and

(12) A written certification by an enrolled actuary that, to the best of his or her knowledge and belief, the actuarial information submitted is true, correct, and complete and conforms to all applicable laws and regulations, provided that this certification may be qualified in writing, but only to the extent the qualification(s) are permitted under 26 CFR 301.6059–1(d).

(b) *Alternative compliance for plan valuation report.* If any of the information specified in paragraph (a)(11) of this section is not available by the date specified in § 4010.10(a), a filer may satisfy the requirement to provide such information by—

(1) Including a statement, with the material that is submitted to PBGC, that the filer will file the unavailable information by the alternative due date specified in § 4010.11(b), and

(2) Filing such information (along with a certification by an enrolled actuary under paragraph (a)(12) of this section) with PBGC by that alternative due date.

(c) *Exempt plan.* The actuarial information specified in this section is not required with respect to a plan if the plan satisfies the conditions in paragraph (c)(1) through (3).

(1) The plan—

(i) Has fewer than 500 participants as of the end of the plan year ending within the information year or as of the valuation date for that plan year and has a 4010 funding shortfall (as defined in § 4010.11(c)) for the plan year ending within the information year that is not in excess of $15 million, or

(ii) Has benefit liabilities as of the end of the plan year ending within the filer's information year, (determined in accordance with paragraph (d) of this section) equal to or less than the fair market value of the plan's assets.

(2) The plan has received, by or within ten days after the due dates, all required installments or other payments required to be made during the information year under ERISA sections 302 and 303 and Code sections 412 and 430.

(3) The plan has no outstanding minimum funding waivers (as described in § 4010.4(a)(3)) as of the end of the plan year ending within the information year.

(d) *Value of benefit liabilities.* The value of a plan's benefit liabilities at the end of a plan year must be determined using the plan census data described in paragraph (d)(1) of this section and the actuarial assumptions and methods described in paragraph (d)(2)

or, where applicable, (d)(3) of this section.

(1) *Census data*—(i) *Census data period.* Plan census data must be determined (for all plans for any information year) either as of the end of the plan year or as of the beginning of the next plan year.

(ii) *Projected census data.* If actual plan census data are not available, a plan may use a projection of plan census data from a date within the plan year. The projection must be consistent with projections used to measure pension obligations of the plan for financial statement purposes and must give a result appropriate for the end of the plan year for these obligations. For example, adjustments to the projection process are required where there has been a significant event (such as a plan amendment or a plant shutdown) that has not been reflected in the projection data.

(2) *Actuarial assumptions and methods.* The value of benefit liabilities must be determined using the following rules in paragraphs (d)(2)(i) through (iv) of this section:

(i) *Assumptions included in §§ 4044.51 through 4044.57.* Interest, expenses, mortality and retirement assumptions must be as prescribed in §§ 4044.51 through 4044.57 of this chapter.

(ii) *Assumptions not included in §§ 4044.51 through 4044.57.* Assumptions for decrements other than mortality and retirement (such as turnover or disability) used to determine the minimum required contribution under ERISA section 303 and Code section 430 for the plan year ending within the filer's information year may be used, but only if all such assumptions are used. For plans where there is no distinction between termination and retirement assumptions, any termination/retirement rates at ages after the Earliest PBGC Retirement Date (as defined in § 4022.10 of this chapter) must be treated as retirement rates and replaced by expected retirement ages; termination/retirement rates at ages below the Earliest PBGC Retirement Date must be treated as pre-retirement decrements. Assumptions used to determine the minimum required contribution for the plan year ending within the filer's information year, other than assumptions for decrements, interest, and expenses (e.g., form of payment, cost-of-living increases, marital status), must be used.

(iii) *Benefits to be valued.* Benefits to be valued include all benefits earned or accrued under the plan as of the end of the plan year ending within the information year and other benefits payable from the plan including, but not limited to, ancillary benefits and retirement supplements, regardless of whether such benefits are protected by the anti-cutback provisions of Code section 411(d)(6).

(iv) *Future service.* Future service expected to be accrued by an active participant in an ongoing plan during future employment (based on the assumptions used to determine benefit liabilities) must be included in determining the earliest and unreduced retirement ages used to determine the expected retirement age and in determining an active participant's entitlement to early retirement subsidies and supplements at the expected retirement age. See the examples in paragraph (e) of this section.

(3) *Special actuarial assumptions for exempt plan determination.* Solely for purposes of determining whether a plan is an exempt plan for an information year, the value of benefit liabilities may be determined by substituting for the retirement age assumptions in paragraph (d)(2) of this section the retirement age assumptions used by the plan for the plan year ending within the information year for purposes of section 303 of ERISA without regard to the at-risk assumption of subsection 303(i) of ERISA and Code section 430 without regard to the at-risk assumption of subsection 430(i).

(e) *Examples.* The following examples demonstrate how XRA is determined and applied for purposes of determining benefit liabilities under paragraph (d) of this section:

(1) *Example 1.* (i) *Facts.* Plan X has a normal retirement age of 65, but allows benefits to commence as early as age 55 for participants who complete at least 10 years of service before termination. Early retirement benefits are reduced for participants with fewer than 25 years of service. Employee A is an active participant who is age 40 and has

completed 5 years of service. Assume the ''medium'' XRA look-up table applies, and that for purposes of § 4010.8(d), the filer has decided not to take pre-retirement decrements other than mortality table into account as permitted under § 4010.8(d)(2)(i).

(ii) *Determination of XRA.* If A continues working, the earliest age A could start receiving benefit is age 55. Therefore, A's earliest retirement age at valuation (ERA) is 55. Because the earliest that A can receive an unreduced benefit is when A completed 25 years of service (at age 60), A's URA is age 60. Under the medium XRA look-up table, A's XRA is 58.

(iii) *Determination of Benefit Liabilities.* The benefit liability is the present value of A's benefit accrued as of the measurement date assuming A retires at age 58 and elects to have benefits commence immediately. Since A will not be eligible to receive unreduced benefits at that time, the accrued benefit is reduced in accordance with the plan's early retirement reduction provisions, including any subsidies to which A will be entitled under the assumption that A works until age 58.

(2) *Example 2.* Employee B is also an active participant in plan X and is age 40 with 15 years of service. B will complete 25 years of service at age 50. However, because the plan does not allow for benefit commencement before age 55, B's ERA, URA and thus, XRA are all age 55. The benefit liability is the present value of B's benefit accrued as of the measurement date assuming B retires at age 55 and elects to commence benefits immediately. Since B will be eligible to receive an unreduced benefit at that time, the full unreduced benefit amount is valued.

(3) *Example 3*—(i) *Facts.* Assume the same facts as in Example 1, except that for purposes of § 4010.8(d), the filer has decided to take pre-retirement decrements other than mortality into account as permitted under § 4010.8(d)(2)(i). Assume the only pre-retirement decrement other than mortality is turnover. The plan's turnover rates go from age 21 to age 54, and the retirement rates go from age 55 to age 65.

(ii) *Determination of XRA.* If A terminates employment at or before age 45, A will not be eligible to receive benefits until age 65. Therefore, the portion of Employee A that is assumed to terminate before age 45 has an ERA, URA, and XRA of age 65. The portion of A that remains in service to age 45, after the application of the applicable turnover decrements, and then terminates at or after age 45, but before age 55, will be entitled to receive a reduced benefit as early as 55. Therefore, the portion of A that is assumed to terminate during this period has an ERA of 55, a URA of 65 and an XRA of 60. Since the turnover rates stop at age 55, the portion of A that remains in service to age 55 is assumed to remain in service until the XRA for that portion of A. For that portion of A, the ERA is 55, the URA is 60 and the XRA is 58. (For purposes of § 4010.8(d), the plan's assumed retirement rates are replaced by XRAs.)

(iii) *Determination of benefit liabilities.* The benefit liability of A is the sum of the present value of A's full accrued benefit at age 65 for the portion of A that terminates between age 40 and age 45, the present value of A's accrued benefit reduced for commencement at age 60 for the portion of A that terminates between age 45 and age 54, and the present value of A's accrued benefit reduced for commencement at age 58 for the portion of A that remains employed until age 55.

(4) *Example 4.* Assume the same facts as in Example 3, except that Employee B, the sole active participant, is age 40 with 15 years of service. The portion of B that is assumed to terminate before age 50 would be entitled to receive a reduced benefit as early as age 55 or an unreduced benefit at age 65. That portion of B has an ERA of 55, a URA of 65, and an XRA of 60. The benefit liability for that portion of B is the present value of B's benefit accrued as of the measurement date assuming B commences a reduced benefit at age 60. The portion of B that survives to age 50 would be entitled to receive an unreduced benefit as early as age 55. That portion of B has an ERA, URA and XRA of 55. The benefit liability for this portion of B is the present value of B's benefit accrued as of the measurement date assuming B retires and commences unreduced payments at age 55.

(f) *Multiple employer plans*. If, with respect to a multiple employer plan, the actuarial information required under this section 4010 for the plan year ending within the filer's information year has been filed under part 4010 by another filer, the filer may include this actuarial information by reference. The filer must report the name, EIN and plan number of the multiple employer plan and the name of the other filer that submitted this information.

(g) *Previous filing for plan year*. If the actuarial information for the plan year as required under this § 4010.8 has been submitted by the filer in a previous 4010 submission, the filing may include that actuarial information by reference to the previous submission.

(h) *Special rules for plan years beginning before 2008*. For plan years beginning before 2008:

(1) The requirements of paragraphs (a) (5) through (8) of this section do not apply.

(2) The references in paragraph (a)(9) of this section to ERISA section 303(k) and Code section 430(k) are replaced with references to sections of ERISA and the Code, as in effect before amendment by the Pension Protection Act of 2006, Public Law 109–280.

(3) Instead of the requirement of paragraph (a)(11) of this section, the actuarial valuation report requirements in § 4010.8(a)(5) in effect as of December 31, 2007, apply.

(i) *Plans subject to special funding rules under sections 104, 105, 106 and 402(b) of the Pension Protection Act of 2006*. Instead of the requirements of paragraph (a)(11) of this section:

(1) In the case of a plan year for which the application of new funding rules is deferred for a plan under sections 104, 105, and 106 of the Pension Protection Act of 2006, Pub. L. 109–280 (dealing with plans of certain rural cooperatives, certain plans affected by settlement agreement with PBGC, and certain plans of government contractors), the requirements in § 4010.8(a)(5) (in connection with the actuarial valuation report) in effect as of December 31, 2007, apply to the plan.

(2) In the case of a plan year for which a plan is subject to section 402(b) of the Pension Protection Act of 2006, Public Law 109–280 (dealing with certain frozen plans of commercial passenger airlines and airline caterers), the plan must meet the requirements in connection with the actuarial valuation report in accordance with instructions on PBGC's Web site, *http://www.pbgc.gov*.

[74 FR 11031, Mar. 16, 2009]

§ 4010.9 Financial information.

(a) *General*. Except as provided in this section, each filer is required to provide, in accordance with the instructions on PBGC's Web site, *http://www.pbgc.gov*, the following financial information for each member of the filer's controlled group (other than an exempt entity)—

(1) Audited financial statements for the fiscal year ending within the information year (including balance sheets, income statements, cash flow statements, and notes to the financial statements);

(2) If audited financial statements are not available by the date specified in § 4010.10(a), unaudited financial statements for the fiscal year ending within the information year; or

(3) If neither audited nor unaudited financial statements are available by the date specified in § 4010.10(a), copies of federal tax returns for the tax year ending within the information year.

(b) *Consolidated financial statements*. If the financial information of a controlled group member is combined with the information of other group members in consolidated financial statements, a filer may provide the following financial information in lieu of the information required in paragraph (a) of this section—

(1) The audited consolidated financial statements for the filer's information year or, if the audited consolidated financial statements are not available by the date specified in § 4010.10(a), unaudited consolidated financial statements for the fiscal year ending within the information year; and

(2) For each controlled group member included in the consolidated financial statements (other than an exempt entity), the member's revenues and operating income for the information year, and net assets at the end of the information year.

(c) *Subsequent submissions.* If unaudited financial statements are submitted as provided in paragraph (a)(2) or (b)(1) of this section, audited financial statements must thereafter be filed within 15 days after they are prepared, if they are prepared. If federal tax returns are submitted as provided in paragraph (a)(3) of this section, audited and unaudited financial statements, if prepared must thereafter be filed within 15 days after they are prepared.

(d) *Submission of public information.* If any of the financial information required by paragraphs (a) through (c) of this section is publicly available, the filer, in lieu of submitting such information to PBGC, may include a statement with the other information that is submitted to PBGC indicating when such financial information was made available to the public and where PBGC may obtain it. For example, if the controlled group member has filed audited financial statements with the Securities and Exchange Commission, it need not file the financial statements with PBGC but instead can identify the SEC filing as part of its submission under this part.

(e) *Inclusion of information about nonfilers and exempt entities.* Consolidated financial statements provided pursuant to paragraph (b)(1) of this section may include financial information of persons who are not controlled group members (e.g., joint ventures) or are exempt entities.

[61 FR 34022, July 1, 1996, as amended at 70 FR 11545, Mar. 9, 2005; 74 FR 11034, Mar. 16, 2009]

§4010.10 Due date and filing with the PBGC.

(a) *Due date.* Except as permitted under paragraph (b) of this section, a filer must file the information required under this part with PBGC on or before the 105th day after the close of the filer's information year. The filing deadline is extended to the 106th date after the close of the filer's information year if the 105-day reporting period includes February 29.

(b) *Alternative due date.* A filer that includes the statement specified in §4010.8(b)(1) with its submission to PBGC by the date specified in paragraph (a) of this section must submit the actuarial information specified in §4010.8(b)(2) within 15 days after the deadline for filing the plan's annual report (Form 5500 series) for the plan year ending within the filer's information year (see §2520.104a–5(a)(2) of this title).

(c) *How and where to file.* PBGC applies the rules in subpart A of part 4000 of this chapter to determine permissible methods of filing with PBGC under this part. See §4000.4 of this chapter for information on where to file.

(d) *Date of filing.* PBGC applies the rules in subpart C of part 4000 of this chapter to determine the date that a submission under this part was filed with PBGC.

(e) *Computation of time.* PBGC applies the rules in subpart D of part 4000 of this chapter to compute any time period under this part.

[61 FR 34022, July 1, 1996, as amended at 68 FR 61353, Oct. 28, 2003; 74 FR 11034, Mar. 16, 2009]

§4010.11 Waivers and extensions.

(a) *Aggregate funding not in excess of $15 million.* Unless reporting is required by §4010.4(a)(2) or (a)(3), reporting is waived for a person (that would be a filer if not for the waiver) for an information year if, for the plan year ending within the information year, the aggregate 4010 funding shortfall for all plans (including any exempt plans) maintained by the person's controlled group (disregarding those plans with no 4010 funding shortfall) does not exceed $15 million.

(b) *Other waiver authority.* PBGC may waive the requirement to submit information with respect to one or more filers or plans or may extend the applicable due date or dates specified in §4010.10 of this part. PBGC will exercise this discretion in appropriate cases where it finds convincing evidence supporting a waiver or extension; any waiver or extension may be subject to conditions. A request for a waiver or extension must be filed in writing with PBGC at the address provided in §4010.10(c) no later than 15 days before the applicable due date specified in §4010.10 of this part, and must state the

facts and circumstances on which the request is based.

(c) *4010 funding shortfall for waivers and exemptions*—(1) *General*. Except as provided in paragraph (c)(2) of this section, a plan's 4010 funding shortfall for a plan year equals the funding shortfall as provided under ERISA section 303(c)(4) and Code section 430(c)(4) determined as of the valuation date for the plan year, except that the value of plan assets is determined without regard to the reduction under ERISA section 303(f)(4)(B) and Code section 430(f)(4)(B) (dealing with reduction of assets by the amount of prefunding and funding standard carryover balances).

(2) *Transition rule for plan years beginning before 2008*. For plan years beginning before 2008, a plan's 4010 funding shortfall for a plan year equals the excess, if any, of the plan's current liability over the value of plan assets. For this purpose, both current liability and plan assets are determined in the manner provided in § 4010.4(b)(3), except that assets are not reduced by the credit balance in the funding standard account.

(3) *Multiple employer plans*. For purposes of § 4010.8(c) and paragraph (a) of this section, the entire 4010 funding shortfall of any multiple employer plan of which the filer or any member of the filer's controlled group is a contributing sponsor is included.

[74 FR 11034, Mar. 16, 2009]

§ 4010.12 Alternative method of compliance for certain sponsors of multiple employer plans.

(a) *In general*. Subject to paragraph (b) of this section, an eligible contributing sponsor (as defined in paragraph (c) of this section) of a multiple employer plan satisfies the requirements of this part for an information year if any contributing sponsor of the multiple employer plan provides a timely filing under this part for an information year that coincides with or overlaps with the eligible contributing sponsor's information year.

(b) *PBGC request for additional information*. PBGC may request some or all of the information that would otherwise be required under this part from an eligible contributing sponsor that uses the alternative method of compliance in this section. PBGC will make such a request no earlier than the date the information would otherwise have been due. The eligible contributing sponsor must provide the requested information no later than 30 days after PBGC makes the request. The requested information need not be submitted electronically.

(c) *Eligible contributing sponsor*. For purposes of this section, an eligible contributing sponsor of a multiple employer plan is a contributing sponsor that would not be subject to reporting if the plan were disregarded in applying the gateway tests in § 4010.4(a).

[74 FR 11035, Mar. 16, 2009]

§ 4010.13 Confidentiality of information submitted.

In accordance with § 4901.21(a)(3) of this chapter and ERISA section 4010(c), any information or documentary material that is not publicly available and is submitted to PBGC pursuant to this part will not be made public, except as may be relevant to any administrative or judicial action or proceeding or for disclosures to either body of Congress or to any duly authorized committee or subcommittee of the Congress.

[61 FR 34022, July 1, 1996. Redesignated and amended at 74 FR 11035, Mar. 16, 2009]

§ 4010.14 Penalties.

If all of the information required under this part is not provided within the specified time limit, PBGC may assess a separate penalty under ERISA section 4071 against the filer and each member of the filer's controlled group (other than an exempt entity) of up to $1,100 a day for each day that the failure continues. PBGC may also pursue other equitable or legal remedies available to it under the law.

[61 FR 34022, July 1, 1996, as amended at 62 FR 36994, July 10, 1997. Redesignated and amended at 74 FR 11035, Mar. 16, 2009]

§ 4010.15 OMB control number.

The collection of information requirements contained in this part have been approved by the Office of Management and Budget under OMB control number 1212–0049.

[61 FR 34022, July 1, 1996. Redesignated at 74 FR 11035, Mar. 16, 2009]

SUBCHAPTER D—COVERAGE AND BENEFITS

PART 4022—BENEFITS PAYABLE IN TERMINATED SINGLE-EMPLOYER PLANS

Subpart A—General Provisions; Guaranteed Benefits

Sec.
4022.1 Purpose and scope.
4022.2 Definitions.
4022.3 Guaranteed benefits.
4022.4 Entitlement to a benefit.
4022.5 Determination of nonforfeitable benefits.
4022.6 Annuity payable for total disability.
4022.7 Benefits payable in a single installment.
4022.8 Form of payment.
4022.9 Time of payment; benefit applications.
4022.10 Earliest PBGC Retirement Date.
4022.11 Guarantee of benefits relating to uniformed service.

Subpart B—Limitations on Guaranteed Benefits

4022.21 Limitations; in general.
4022.22 Maximum guaranteeable benefit.
4022.23 Computation of maximum guaranteeable benefits.
4022.24 Benefit increases.
4022.25 Five-year phase-in of benefit guarantee for participants other than substantial owners.
4022.26 Phase-in of benefit guarantee for participants who are substantial owners.
4022.27 Phase-in of guarantee of unpredictable contingent event benefits.
4022.28 Effect of tax disqualification.

Subpart C—Section 4022(c) Benefits

4022.51 Determination of section 4022(c) benefits in a PPA 2006 bankruptcy termination.

Subpart D—Benefit Reductions in Terminating Plans

4022.61 Limitations on benefit payments by plan administrator.
4022.62 Estimated guaranteed benefit.
4022.63 Estimated title IV benefit.

Subpart E—PBGC Recoupment and Reimbursement of Benefit Overpayments and Underpayments

4022.81 General rules.
4022.82 Method of recoupment.
4022.83 PBGC reimbursement of benefit underpayments.

Subpart F—Certain Payments Owed Upon Death

4022.91 When do these rules apply?
4022.92 What definitions do I need to know for these rules?
4022.93 Who will get benefits the PBGC may owe me at the time of my death?
4022.94 What are the PBGC's rules on designating a person to get benefits the PBGC may owe me at the time of my death?
4022.95 Examples.

Subpart G—Certain-and-Continuous and Similar Annuity Payments Owed for Future Periods After Death

4022.101 When do these rules apply?
4022.102 What definitions do I need to know for these rules?
4022.103 Who will get benefits if I die when payments for future periods under a certain-and-continuous or similar annuity are owed upon my death?
4022.104 Examples.

APPENDIX A TO PART 4022—LUMP SUM MORTALITY RATES
APPENDIX B TO PART 4022—LUMP SUM INTEREST RATES FOR PBGC PAYMENTS
APPENDIX C TO PART 4022—LUMP SUM INTEREST RTAES FOR PRIVATE-SECTOR PAYMENTS

AUTHORITY: 29 U.S.C. 1302, 1322, 1322b, 1341(c)(3)(D), and 1344.

SOURCE: 61 FR 34028, July 1, 1996, unless otherwise noted.

Subpart A—General Provisions; Guaranteed Benefits

§ 4022.1 Purpose and scope.

The purpose of this part is to prescribe rules governing the calculation and payment of benefits payable in terminated single-employer plans under section 4022 of ERISA. Subpart A, which applies to each plan providing benefits guaranteed under title IV of ERISA, contains definitions applicable to all subparts, and describes benefits that are guaranteed by the PBGC subject to the limitations set forth in subpart B. Subpart C is reserved for rules relating to the calculation and payment of unfunded nonguaranteed benefits under section 4022(c) of ERISA. Subpart D prescribes procedures that minimize the overpayment of benefits

by plan administrators after initiating distress terminations of single-employer plans that are not expected to be sufficient for guaranteed benefits. Subpart E sets forth the method of recoupment of benefit payments in excess of the amounts permitted under sections 4022, 4022B, and 4044 of ERISA from participants and beneficiaries in PBGC-trusteed plans, and provides for reimbursement of benefit underpayments. (The provisions of this part have not been amended to take account of changes made in section 4022 of ERISA by sections 766 and 777 of the Retirement Protection Act of 1994.)

[61 FR 34028, July 1, 1996, as amended at 62 FR 67728, Dec. 30, 1997]

§ 4022.2 Definitions.

The following terms are defined in § 4001.2 of this chapter: annuity, bankruptcy filing date, Code, employer, ERISA, guaranteed benefit, mandatory employee contributions, nonforfeitable benefit, non-PPA 2006 bankruptcy termination, normal retirement age, notice of intent to terminate, PBGC, person, plan, plan administrator, plan year, PPA 2006 bankruptcy termination, proposed termination date, statutory hybrid plan, substantial owner, and title IV benefit.

In addition, for purposes of this part (unless otherwise required by the context):

Accumulated mandatory employee contributions means mandatory employee contributions plus interest credited on those contributions under the plan, or, if greater, interest required by section 204(c) of ERISA.

Benefit in pay status means that one or more benefit payments have been made or would have been made except for administrative delay.

Benefit increase means any benefit arising from the adoption of a new plan or an increase in the value of benefits payable arising from an amendment to an existing plan. Such increases include, but are not limited to, a scheduled increase in benefits under a plan or plan amendment, such as a cost-of-living increase, and any change in plan provisions which advances a participant's or beneficiary's entitlement to a benefit, such as liberalized participation requirements or vesting schedules, reductions in the normal or early retirement age under a plan, an unpredictable contingent event benefit, and changes in the form of benefit payments. In the case of a plan under which the amount of benefits depends on the participant's salary and the participant receives a salary increase the resulting increase in benefits to which the participant becomes entitled will not, for the purpose of this part, be treated as a benefit increase. Similarly, in the case of a plan under which the amount of benefits depends on the participant's age or service, and the participant becomes entitled to increased benefits solely because of advancement in age or service, the increased benefits to which the participant becomes entitled will not, for the purpose of this part, be treated as a benefit increase.

Covered employment means employment with respect to which benefits accrue under a plan.

Pension benefit means a benefit payable as an annuity, or one or more payments related thereto, to a participant who permanently leaves or has permanently left covered employment, or to a surviving beneficiary, which payments by themselves or in combination with Social Security, Railroad Retirement, or workmen's compensation benefits provide a substantially level income to the recipient.

Straight life annuity means a series of level periodic payments payable for the life of the recipient, but does not include any combined annuity form, including an annuity payable for a term certain and life.

Unpredictable contingent event (UCE) has the same meaning as unpredictable contingent event in section 206(g)(1)(C) of ERISA and Treas. Reg. § 1.436–1(j)(9) (26 CFR 1.436–1(j)(9)). It includes a plant shutdown (full or partial) or a similar event (such as a full or partial closing of another type of facility, or a layoff or other workforce reduction), or any event other than the attainment of any age, performance of any service, receipt or derivation of any compensation, or occurrence of death or disability.

Unpredictable contingent event benefit (UCEB) has the same meaning as unpredictable contingent event benefit in

section 206(g)(1)(C) of ERISA and Treas. Reg. § 1.436–1(j)(9) (26 CFR 1.436–1(j)(9)). Thus, a UCEB is any benefit or benefit increase to the extent that it would not be payable but for the occurrence of a UCE. A benefit or benefit increase that is conditioned upon the occurrence of a UCE does not cease to be a UCEB as a result of the contingent event having occurred or its occurrence having become reasonably predictable.

[61 FR 34028, July 1, 1996, as amended at 74 FR 59096, Nov. 17, 2009; 76 FR 34601, June 14, 2011; 79 FR 25672, May 6, 2014]

§ 4022.3 Guaranteed benefits.

(a) *General.* Except as otherwise provided in this part, the PBGC will guarantee the amount, as of the termination date, of a benefit provided under a plan to the extent that the benefit does not exceed the limitations in ERISA and in subpart B, if—

(1) The benefit is, on the termination date, a nonforfeitable benefit;

(2) The benefit qualifies as a pension benefit as defined in § 4022.2; and

(3) The participant is entitled to the benefit under § 4022.4.

(b) *PPA 2006 bankruptcy termination.* (1) *Substitution of bankruptcy filing date.* In a PPA 2006 bankruptcy termination, ''bankruptcy filing date'' is substituted for ''termination date'' each place that ''termination date'' appears in paragraph (a) of this section.

(2) *Condition for entitlement satisfied between bankruptcy filing date and termination date.* If a participant becomes entitled to a subsidized early retirement or other benefit before the termination date (or on or before the termination date, in the case of a requirement that a participant attain a particular age, earn a particular amount of service, become disabled, or die) but on or after the bankruptcy filing date (or after the bankruptcy filing date, in the case of a requirement that a participant attain a particular age, earn a particular amount of service, become disabled, or die), the subsidy or other benefit is not guaranteed because the participant had not satisfied the conditions for entitlement by the bankruptcy filing date. In such a case, the participant may have been put into pay status with the subsidized early retirement or other benefit by the plan administrator, because the plan was ongoing at the time. Even though the subsidy or other benefit is not guaranteed, the participant may be entitled to another benefit from PBGC (at that time or in the future). If so, PBGC will continue paying the participant a benefit, but in an amount reduced to reflect that the subsidy or other benefit is not guaranteed. PBGC will also allow a similarly situated participant who had not started receiving a subsidized early retirement or other benefit before PBGC became trustee of the plan to begin receiving a benefit (if the participant would have been allowed under the plan to begin receiving benefits and has reached his Earliest PBGC Retirement Date, as defined in § 4022.10), but in an amount that does not include the subsidy or other benefit.

(3) *Examples.* (i) *Vesting.* A plan provides for 5-year ''cliff'' vesting—*i.e.*, benefits become 100% vested when the participant completes five years of service; before the five-year mark, benefits are 0% vested. The contributing sponsor of the plan files a bankruptcy petition on November 15, 2006. The plan terminates with a termination date of December 4, 2007, and PBGC becomes statutory trustee of the plan. A participant had four years and six months of service at the bankruptcy filing date and became vested in May 2007. None of the participant's benefit is guaranteed because none of the benefit was nonforfeitable as of the bankruptcy filing date.

(ii) *Subsidized early retirement benefit.* The facts regarding the plan are the same as in Example (i) (paragraph (b)(3)(i) of this section), but the plan also provides that a participant may retire from active employment at any age with a fully subsidized (*i.e.*, not actuarially reduced) early retirement benefit if he has completed 30 years of service. The plan also provides that a participant who is age 60 and has completed 20 years of service may retire from active employment with an early retirement benefit, reduced by three percent for each year by which the participant's age at benefit commencement is less than 65. A participant was age 61 and had 29 years and 6 months of service at the bankruptcy filing date.

The participant continued working for another six months, then retired as of June 1, 2007, and immediately began receiving from the plan the fully subsidized ''30-and-out'' early retirement benefit. PBGC will continue paying the participant a benefit, but PBGC's guarantee does not include the full subsidy for the ''30-and-out'' benefit, because the participant satisfied the conditions for that benefit after the bankruptcy filing date. The guarantee does include, however, the partial subsidy associated with the ''60/20'' early retirement benefit, because the participant satisfied the conditions for that benefit before the bankruptcy filing date.

(iii) *Accruals after bankruptcy filing date*. The facts regarding the plan are the same as in Example (i) (paragraph (b)(3)(i) of this section). A participant has a vested, accrued benefit of $500 per month as of the bankruptcy filing date. At the plan's termination date, the participant has a vested, accrued benefit of $512 per month. His guaranteed benefit is limited to $500 per month—the accrued, nonforfeitable benefit as of the bankruptcy filing date.

[61 FR 34028, July 1, 1996; 61 FR 67943, Dec. 26, 1996; 76 FR 34601, June 14, 2011]

§ 4022.4 Entitlement to a benefit.

(a) A participant or his surviving beneficiary is entitled to a benefit if under the provisions of a plan:

(1) The benefit was in pay status on the termination date of the plan.

(2) The benefit is payable in an optional life-annuity form of benefit that the participant or beneficiary elected on or before the termination date of the plan or, if later, the date on which PBGC became statutory trustee of the plan.

(3) Except for a benefit described in paragraph (a)(2) of this section, before the termination date (or on or before the termination date, in the case of a requirement that a participant attain a particular age, earn a particular amount of service, become disabled, or die) the participant had satisfied the conditions of the plan necessary to establish the right to receive the benefit prior to such date (prior to or on such date, in the case of a requirement that a participant attain a particular age, earn a particular amount of service, become disabled, or die) other than application for the benefit, satisfaction of a waiting period described in the plan, or retirement; or

(4) Absent an election by the participant, the benefit would be payable upon retirement.

(5) In the case of a benefit that returns all or a portion of a participant's accumulated mandatory employee contributions upon death, the participant (or beneficiary) had satisfied the conditions of the plan necessary to establish the right to the benefit other than death or designation of a beneficiary.

(b) If none of the conditions set forth in paragraph (a) of this section is met, the PBGC will determine whether the participant is entitled to a benefit on the basis of the provisions of the plan and the circumstances of the case.

(c) In a PPA 2006 bankruptcy termination, ''bankruptcy filing date'' is substituted for ''termination date'' each place that ''termination date'' appears in paragraphs (a)(1) and (3) of this section. In making this substitution for purposes of paragraph (a)(3) of this section, the rule in § 4022.3(b)(2) (dealing with the situation where the condition for entitlement was satisfied between the bankruptcy filing date and the termination date) shall apply.

[61 FR 34028, July 1, 1996, as amended at 67 FR 16954, Apr. 8, 2002; 76 FR 34602, June 14, 2011]

§ 4022.5 Determination of nonforfeitable benefits.

(a) A guaranteed benefit payable to a surviving beneficiary is not considered to be forfeitable solely because the plan provides that the benefit will cease upon the remarriage of such beneficiary or his attaining a specified age. However, the PBGC will observe the provisions of the plan relating to the effect of such remarriage or attainment of such specified age on the surviving beneficiary's eligibility to continue to receive benefit payments.

(b) Any other provision in a plan that the right to a benefit in pay status will cease or be suspended upon the occurrence of any specified condition does not automatically make that benefit forfeitable. In each such case the PBGC will determine whether the benefit is forfeitable.

(c) A benefit guaranteed under § 4022.6 shall not be considered forfeitable solely because the plan provides that upon recovery of the participant the benefit will cease.

§ 4022.6 Annuity payable for total disability.

(a) Except as otherwise provided in this section, an annuity which is payable (or would be payable after a waiting period described in the plan, whether or not the participant is in receipt of other benefits during such waiting period), under the terms of a plan on account of the total and permanent disability of a participant which is expected to last for the life of the participant and which began on or before the termination date is considered to be a pension benefit.

(b) In any case in which the PBGC determines that the standards for determining such total and permanent disability under a plan were unreasonable, or were modified in anticipation of termination of the plan, the disability benefits payable to a participant under such standard shall not be guaranteed unless the participant meets the standards of the Social Security Act and the regulations promulgated thereunder for determining total disability.

(c) For the purpose of this section, a participant may be required, upon the request of the PBGC, to submit to an examination or to submit proof of continued total and permanent disability. If the PBGC finds that a participant is no longer so disabled, it may suspend, modify, or discontinue the payment of the disability benefit.

(d) *PPA 2006 bankruptcy termination.* In a PPA 2006 bankruptcy termination, ''bankruptcy filing date'' is substituted for ''termination date'' in paragraph (a) of this section.

[61 FR 34028, July 1, 1996, as amended at 67 FR 16954, Apr. 8, 2002; 76 FR 34602, June 14, 2011]

§ 4022.7 Benefits payable in a single installment.

(a) *Alternative benefit.* If a benefit that is guaranteed under this part is payable in a single installment or substantially so under the terms of the plan, or an option elected under the plan by the participant, the benefit will not be guaranteed or paid as such, but the PBGC will guarantee the alternative benefit, if any, in the plan which provides for the payment of equal periodic installments for the life of the recipient. If the plan provides more than one such annuity, the recipient may within 30 days after notification of the proposed termination of the plan elect to receive one of those annuities. If the plan does not provide such an annuity, the PBGC will guarantee an actuarially equivalent life annuity.

(b)(1) *Payment in lump sum.* Notwithstanding paragraph (a) of this section:

(i) *In general.* If the lump sum value of a benefit (or of an estimated benefit) payable by the PBGC is $5,000 or less and the benefit is not yet in pay status, the benefit (or estimated benefit) may be paid in a lump sum.

(ii) *Annuity option.* If the PBGC would otherwise make a lump sum payment in accordance with paragraph (b)(1)(i) of this section and the monthly benefit (or the estimated monthly benefit) is equal to or greater than $25 (at normal retirement age and in the normal form for an unmarried participant), the PBGC will provide the option to receive the benefit in the form of an annuity.

(iii) *Election of QPSA lump sum.* If the lump sum value of annuity payments under a qualified preretirement survivor annuity (or under an estimated qualified preretirement survivor annuity) is $5,000 or less, the benefit is not yet in pay status, and the participant dies after the termination date, the benefit (or estimated benefit) may be paid in a lump sum if so elected by the surviving spouse.

(iv) *Payments to estates.* The PBGC may pay any annuity payments payable to an estate in a single installment without regard to the threshold in paragraph (b)(1)(i) of this section if so elected by the estate. The PBGC will discount the annuity payments using the federal mid-term rate (as determined by the Secretary of the Treasury pursuant to section 1274(d)(1)(C)(ii) of the Code) applicable for the month the participant died based on monthly compounding.

(2) *Return of employee contributions*—(i) *General.* Notwithstanding any other provision of this part, the PBGC may

pay in a single installment (or a series of installments) instead of as an annuity, the value of the portion of an individual's basic-type benefit derived from mandatory employee contributions, if:

(A) The individual elects payment in a single installment (or a series of installments) before the sixty-first (61st) day after the date he or she receives notice that such an election is available; and

(B) Payment in a single installment (or a series of installments) is consistent with the plan's provisions. For purposes of this part, the portion of an individual's basic-type benefit derived from mandatory employee contributions is determined under § 4044.12 (priority category 2 benefits) of this chapter, and the value of that portion is computed under the applicable rules contained in part 4044, subpart B, of this chapter.

(ii) *Set-off for distributions after termination*. The amount to be returned under paragraph (b)(2)(i) of this section is reduced by the set-off amount. The set-off amount is the amount by which distributions made to the individual after the termination date exceed the amount that would have been distributed, exclusive of mandatory employee contributions, if the individual had withdrawn the mandatory employee contributions on the termination date.

Example: Participant A is receiving a benefit of $600 per month when the plan terminates, $200 of which is derived from mandatory employee contributions. If the participant had withdrawn his contributions on the termination date, his benefit would have been reduced to $400 per month. The participant receives two monthly payments after the termination date. The set-off amount is $400. (The $600 actual payment minus the $400 the participant would have received if he had withdrawn his contributions multiplied by the two months for which he received the extra payment.)

(c) *Death benefits*—(1) *General*. Notwithstanding paragraph (a) of this section, a benefit that would otherwise be guaranteed under the provisions of this subpart, except for the fact that it is payable solely in a single installment (or substantially so) upon the death of a participant, shall be paid by the PBGC as an annuity that has the same value as the single installment. The PBGC will in each case determine the amount and duration of the annuity based on all the facts and circumstances.

(2) *Exception*. Upon the death of a participant the PBGC may pay in a single installment (or a series of installments) that portion of the participant's accumulated mandatory employee contributions that is payable under the plan in a single installment (or a series of installments) upon the participant's death.

(d) *Determination of lump sum amount*. For purposes of paragraph (b)(1) of this section—

(1) *Benefits disregarded*. In determining whether the lump-sum value of a benefit is $5,000 or less, the PBGC may disregard the value of any benefits the plan or the PBGC previously paid in lump-sum form or the plan paid by purchasing an annuity contract, the value of any benefits returned under paragraph (b)(2) of this section, and the value of any benefits the PBGC has not yet determined under section 4022(c) of ERISA.

(2) *Actuarial assumptions*. The PBGC will calculate the lump sum value of a benefit by valuing the monthly annuity benefits payable in the form determined under § 4044.51(a) of this chapter and commencing at the time determined under § 4044.51(b) of this chapter. The actuarial assumptions used will be those described in § 4044.52, except that—

(i) *Loading for expenses*. There will be no adjustment to reflect the loading for expenses;

(ii) *Mortality rates and interest assumptions*. The mortality rates in appendix A to this part and the interest assumptions in appendix B to this part will apply; and

(iii) *Date for determining lump sum value*. The date as of which a lump sum value is calculated is the termination date, except that in the case of a subsequent insufficiency it is the date described in section 4062(b)(1)(B) of ERISA.

(e) *Publication of lump sum rates*. The PBGC will provide two sets of lump sum interest rates as follows—

(1) In appendix B to this part, the lump sum interest rates for PBGC payments, as provided under paragraph (d)(2) of this section; and

(2) In appendix C to this part, the lump sum interest rates for private-sector payments.

[61 FR 34028, July 1, 1996, as amended at 63 FR 38306, July 16, 1998; 65 FR 14752, 14755, Mar. 17, 2000; 67 FR 16954, Apr. 8, 2002]

§ 4022.8 Form of payment.

(a) *In general.* This section applies where benefits are not already in pay status. Except as provided in § 4022.7 (relating to the payment of lump sums), the PBGC will pay benefits—

(1) In the automatic PBGC form described in paragraph (b) of this section; or

(2) If an optional PBGC form described in paragraph (c) of this section is elected, in that optional form.

(b) *Automatic PBGC form*—(1) *Participants.* (i) *Married participants.* The automatic PBGC form with respect to a participant who is married at the time the benefit enters pay status is the form a married participant would be entitled to receive from the plan in the absence of an election.

(ii) *Unmarried participants.* The automatic PBGC form with respect to a participant who is unmarried at the time the benefit enters pay status is the form an unmarried person would be entitled to receive from the plan in the absence of an election.

(2) *Beneficiaries.* (i) *QPSA beneficiaries.* The automatic PBGC form with respect to the spouse of a married participant in a plan with a termination date on or after August 23, 1984, who dies before his or her benefit enters pay status is the qualified preretirement survivor annuity such a spouse would be entitled to receive from the plan in the absence of an election. The PBGC will not charge the participant or beneficiary for this survivor benefit coverage for the time period beginning on the plan's termination date (regardless of whether the plan would have charged).

(ii) *Alternate payees.* The automatic PBGC form with respect to an alternate payee with a separate interest under a qualified domestic relations order is the form an unmarried participant would be entitled to receive from the plan in the absence of an election.

(c) *Optional PBGC forms*—(1) *Participant and beneficiary elections.* A participant may elect any optional form described in paragraphs (c)(4) or (c)(5) of this section. A beneficiary described in paragraph (b)(2) of this section (a QPSA beneficiary or an alternate payee) may elect any optional form described in paragraphs (c)(4)(i) through (c)(4)(iv) of this section.

(2) *Permitted designees.* A participant or beneficiary, whether married or unmarried, who elects an optional form with a survivor feature (e.g., a 5-year certain-and-continuous annuity or, in the case of a participant, a joint-and-50%-survivor annuity) may designate either a spouse or a non-spouse beneficiary to receive survivor benefits. An optional joint-life form must be payable to a natural person or (with the consent of the PBGC) to a trust for the benefit of one or more natural persons.

(3) *Spousal consent.* In the case of a participant who is married at the time the benefit enters pay status, the election of an optional form or the designation of a non-spouse beneficiary is valid only if the participant's spouse consents.

(4) *Permitted optional single-life forms.* The PBGC may offer benefits in the following single-life forms:

(i) A straight-life annuity;

(ii) A 5-year certain-and-continuous annuity;

(iii) A 10-year certain-and-continuous annuity;

(iv) A 15-year certain-and-continuous annuity; and

(v) The form an unmarried person would be entitled to receive from the plan in the absence of an election.

(5) *Permitted optional joint-life forms.* The PBGC may offer benefits in the following joint-life forms:

(i) A joint-and-50%-survivor annuity;

(ii) A joint-and-50%-survivor-''pop-up'' annuity (*i.e.*, where the participant's benefit ''pops up'' to the unreduced level if the beneficiary dies first);

(iii) A joint-and-75%-survivor annuity; and

(iv) A joint-and-100%-survivor annuity.

(6) *Determination of benefit amount; starting benefit.* To determine the amount of the benefit in an optional PBGC form—

(i) *Single-life forms.* In the case of an optional PBGC form under paragraph

(c)(4) of this section, the PBGC will first determine the amount of the benefit in the form the plan would pay to an unmarried participant in the absence of an election.

(ii) *Joint-life forms.* In the case of an optional PBGC form under paragraph (c)(5) of this section, the PBGC will first determine the amount of the benefit in the form the plan would pay to a married participant in the absence of an election. For this purpose, the PBGC will treat a participant who designates a non-spouse beneficiary as being married to a person who is the same age as that non-spouse beneficiary.

(7) *Determination of benefit amount; conversion factors.* The PBGC will convert the benefit amount determined under paragraph (c)(6) of this section to the optional form elected, using PBGC factors based on—

(i) *Mortality.* Unisex mortality rates that are a fixed blend of 50 percent of the male mortality rates and 50 percent of the female mortality rates from the 1983 Group Annuity Mortality Table as prescribed in Rev. Rul. 95–6, 1995–1 C.B. 80 (Internal Revenue Service Cumulative Bulletins are available from the Superintendent of Documents, Government Printing Office, Washington, DC 20402); and

(ii) *Interest.* An interest rate of six percent.

(8) *Determination of benefit amount; limitation.* The PBGC will limit the benefit amount determined under paragraph (c)(7) of this section to the amount of the benefit it would pay in the form of a straight life annuity under paragraph (c)(4)(i) of this section.

(9) *Incidental benefits.* The PBGC will not pay an optional PBGC form with a death benefit (e.g., a joint-and-50%-survivor annuity) unless the death benefit would be an ''incidental death benefit'' under 26 CFR 1.401–1(b)(1)(i). If the death benefit would not be an ''incidental death benefit,'' the PBGC may instead offer a modified version of the optional form under which the death benefit would be an ''incidental death benefit.''

(d) *Change in benefit form.* Once payment of a benefit starts, the benefit form cannot be changed.

(e) *PBGC discretion.* The PBGC may make other optional annuity forms available subject to the rules in paragraph (c) of this section.

[67 FR 16954, Apr. 8, 2002]

§ 4022.9 Time of payment; benefit applications.

(a) *Time of payment.* A participant may start receiving an annuity benefit from the PBGC (subject to the PBGC's rules for starting benefit payments) on his or her Earliest PBGC Retirement Date as determined under § 4022.10 of this subchapter or, if later, the plan's termination date.

(b) *Elections and consents.* The PBGC may prescribe the time and manner for benefit elections to be made and spousal consents to be provided.

(c) *Benefit applications.* The PBGC is not required to accept any application for benefits not made in accordance with its forms and instructions.

(d) *Filing with the PBGC*—(1) *Method and date of filing.* The PBGC applies the rules in subpart A of part 4000 of this chapter to determine permissible methods of filing with the PBGC under this part. Benefit applications and related submissions are treated as filed on the date received by the PBGC unless the instructions for the applicable form provide for an earlier date. Subpart C of part 4000 of this chapter provides rules for determining when the PBGC receives a submission.

(2) *Where to file.* See § 4000.4 of this chapter for information on where to file.

(3) *Computation of time.* The PBGC applies the rules in subpart D of part 4000 of this chapter to compute any time period for filing under this part.

[67 FR 16955, Apr. 8, 2002, as amended at 68 FR 61353, Oct. 28, 2003]

§ 4022.10 Earliest PBGC Retirement Date.

The Earliest PBGC Retirement Date for a participant is the earliest date on which the participant could retire under plan provisions for purposes of section 4044(a)(3)(B) of ERISA. The Earliest PBGC Retirement Date is determined in accordance with this § 4022.10. For purposes of this § 4022.10, ''age'' means the participant's age as of his or

her last birthday (unless otherwise required by the context).

(a) *Immediate annuity at or after age 55.* If the earliest date on which a participant could separate from service with the right to receive an immediate annuity is on or after the date the participant reaches age 55, the Earliest PBGC Retirement Date for the participant is the earliest date on which the participant could separate from service with the right to receive an immediate annuity.

(b) *Immediate annuity before age 55.* If the earliest date on which a participant could separate from service with the right to receive an immediate annuity is before the date the participant reaches age 55, the Earliest PBGC Retirement Date for the participant is the date the participant reaches age 55 (except as provided in paragraph (c) of this section).

(c) *Facts and circumstances.* If a participant could separate from service with the right to receive an immediate annuity before the date the participant reaches age 55, the PBGC will make a determination, under the facts and circumstances, as to whether the participant could retire under plan provisions for purposes of section 4044(a)(3)(B) of ERISA on an earlier date. If the PBGC determines, under the facts and circumstances, that the participant could retire under plan provisions for those purposes on an earlier date, that earlier date is the Earliest PBGC Retirement Date for the participant. In making this determination, the PBGC will take into account plan provisions (e.g., the general structure of the provisions, the extent to which the benefit is subsidized, and whether eligibility for the benefit is based on a substantial service or age-and-service requirement), the age at which employees customarily retire (under the particular plan or in the particular company or industry, as appropriate), and all other relevant considerations. Neither a plan's reference to a separation from service at a particular age as a ''retirement'' nor the ability of a participant to receive an immediate annuity at a particular age necessarily makes the date the participant reaches that age the Earliest PBGC Retirement Date for the participant. The Earliest PBGC Retirement Date determined by the PBGC under this paragraph (c) will never be earlier than the earliest date the participant could separate from service with the right to receive an immediate annuity.

(d) *Examples.* The following examples illustrate the operation of the rules in paragraphs (a) through (c) of this section.

(1) *Normal retirement age.* A plan's normal retirement age is age 65. The plan does not offer a consensual lump sum or an immediate annuity upon separation before normal retirement age. The Earliest PBGC Retirement Date for a participant who, as of the plan's termination date, is age 50 is the date the participant reaches age 65.

(2) *Early retirement age.* A plan's normal retirement age is age 65. The plan specifies an early retirement age of 60 with 10 years of service. The plan does not offer a consensual lump sum or an immediate annuity upon separation before early retirement age. The Earliest PBGC Retirement Date for a participant who, as of the plan's termination date, is age 55 and has completed 10 years of service is the date the participant reaches age 60.

(3) *Separation at any age.* A plan's normal retirement age is age 65. The plan specifies an early retirement age of 60 but offers an immediate annuity upon separation regardless of age. The Earliest PBGC Retirement Date for a participant who, as of the plan's termination date, is age 35 is the date the participant reaches age 55, unless the PBGC determines under the facts and circumstances that the participant could ''retire'' for purposes of ERISA section 4044(a)(3)(B) on an earlier date, in which case the participant's Earliest PBGC Retirement Date would be that earlier date.

(4) *Age 50 retirement common.* A plan's normal retirement age is age 60. The plan specifies an early retirement age of 50 but offers an immediate annuity upon separation regardless of age. The Earliest PBGC Retirement Date for a participant who, as of the plan's termination date, is age 35 is the date the participant reaches age 55, unless the PBGC determines under the facts and circumstances that the participant

could retire for purposes of ERISA section 4044(a)(3)(B) on an earlier date, in which case the Earliest PBGC Retirement Date would be that earlier date. For example, if it were common for participants to retire at age 50, the PBGC could determine that the participant's Earliest PBGC Retirement Date would be the date the participant reached age 50.

(5) *''30-and-out'' benefit.* A plan's normal retirement age is age 65. The plan offers an immediate annuity upon separation regardless of age and a fully-subsidized annuity upon separation with 30 years of service. The Earliest PBGC Retirement Date for a participant who, as of the plan's termination date, is age 48 and has completed 30 years of service is the date the participant reaches age 55, unless the PBGC determines under the facts and circumstances that the participant could retire for purposes of ERISA section 4044(a)(3)(B) on an earlier date, in which case the participant's Earliest PBGC Retirement Date would be that earlier date. In this example, the PBGC generally would determine under the facts and circumstances that the participant's Earliest PBGC Retirement Date is the date the participant completed 30 years of service.

(6) *Typical airline pilots' plan.* An airline pilots' plan has a normal retirement age of 60. The plan specifies an early retirement age of 50 (with 5 years of service). The Earliest PBGC Retirement Date for a participant who, as of the plan's termination date, is age 48 and has completed five years of service would be the date the participant reaches age 55, unless the PBGC determines under the facts and circumstances that the participant could retire for purposes of ERISA section 4044(a)(3)(B) on an earlier date, in which case the participant's Earliest PBGC Retirement Date would be that earlier date. In this example, the PBGC generally would determine under the facts and circumstances that the participant's Earliest PBGC Retirement Date is the date the participant reaches age 50. If the plan instead had provided for early retirement before age 50, the PBGC would consider all the facts and circumstances (including the plan's normal retirement age and the age at which employees customarily retire in the airline industry) in determining whether to treat the date the participant reaches the plan's early retirement age as the participant's Earliest PBGC Retirement Date.

(e) *Special rule for ''window'' provisions.* For purposes of paragraphs (a), (b), and (c) of this section, the PBGC will treat a participant as being able, under plan provisions, to separate from service with the right to receive an immediate annuity on a date before the plan's termination date only if—

(1) Eligibility for that immediate annuity continues through the earlier of—

(i) The plan's termination date; or

(ii) The date the participant actually separates from service with the right to receive an immediate annuity; and

(2) The participant satisfies the conditions for eligibility for that immediate annuity on or before the plan's termination date.

[67 FR 16955, Apr. 8, 2002]

§ 4022.11 Guarantee of benefits relating to uniformed service.

This section applies to a benefit of a participant who becomes reemployed after service in the uniformed services that is covered by the Uniformed Services Employment and Reemployment Rights Act of 1994 (USERRA).

(a) A benefit described in paragraph (b) of this section that would satisfy the requirements of § 4022.3(a) and (c) (together with any benefit earned for the period preceding military service) except for the fact that the participant was not reemployed on or before the termination date will be deemed to satisfy those requirements if PBGC determines, based upon a demonstration by the participant or otherwise, that he or she became reemployed after the termination date and entitled to the benefit under USERRA.

(b) A benefit described in this paragraph (b) is a benefit attributable to a period of service commencing before the termination date and ending on the termination date during which the participant was serving in the uniformed services as defined in 38 U.S.C. 4303(13) (or was in a subsequent reemployment eligibility period) and to which the participant is entitled under USERRA.

(c) Example: A plan's vesting requirement is 5 years of service with the employer. A participant has completed 4 years of service when he leaves employment for uniformed service. The plan terminates while the participant is in military service. As of the termination date, the participant would have had 5 years of service and 5 years of benefit accruals if he had remained continuously employed. Upon reemployment after the termination date but within the time limits set by USERRA, the participant would have had 6 years of service under the plan for vesting and benefit accrual purposes, if the plan had not terminated. PBGC would treat the participant as having a vested, nonforfeitable plan benefit with 5 years of vesting service and benefit accruals as of the termination date.

(d) In the case of a PPA 2006 bankruptcy termination, ''bankruptcy filing date'' is substituted for ''termination date'' each place that ''termination date'' appears in this section.

[74 FR 59096, Nov. 17, 2009]

Subpart B—Limitations on Guaranteed Benefits

§ 4022.21 Limitations; in general.

(a)(1) Subject to paragraphs (b), (c), (d), and (e) of this section, the PBGC will not guarantee that part of an installment payment that exceeds the dollar amount payable as a straight life annuity commencing at normal retirement age, or thereafter, to which a participant would have been entitled under the provisions of the plan in effect on the termination date, on the basis of his credited service to such date. If the plan does not provide a straight life annuity either as its normal form of retirement benefit or as an option to the normal form, the PBGC will for purposes of this paragraph convert the plan's normal form benefit to a straight life annuity of equal actuarial value as determined by the PBGC.

(2) The limitation of paragraph (a)(1) of this section shall not apply to:

(i) A survivor's benefit payable as an annuity on account of the death of a participant that occurred on or before the plan's termination date and before the participant retired;

(ii) A disability pension described in § 4022.6 of this part; or

(iii) A benefit payable in non-level installments that in combination with Social Security, Railroad Retirement, or workman's compensation benefits yields a substantially level income if the projected income from the plan benefit over the expected life of the recipient does not exceed the value of the straight life annuity described in paragraph (a)(1) of this section.

(b) The PBGC will not guarantee the payment of that part of any benefit that exceeds the limitations in section 4022(b) of ERISA and this subpart B.

(c)(1) Except as provided in paragraph (c)(2) of this section, the PBGC does not guarantee a benefit payable in a single installment (or substantially so) upon the death of a participant or his surviving beneficiary unless that benefit is substantially derived from a reduction in the pension benefit payable to the participant or surviving beneficiary.

(2) Paragraphs (a) and (c)(1) of this section do not apply to that portion of accumulated mandatory employee contributions payable under a plan upon the death of a participant, and such a benefit is a pension benefit for purposes of this part.

(d) The PBGC will not guarantee a joint-life annuity benefit payable to other than—

(1) Natural persons; or

(2) A trust or estate for the benefit of one or more natural persons.

(e) *PPA 2006 bankruptcy termination.* (1) *Substitution of bankruptcy filing date.* In a PPA 2006 bankruptcy termination, ''bankruptcy filing date'' is substituted for ''termination date'' each place that ''termination date'' appears in paragraph (a)(1) of this section.

(2) *Examples.* (i) *Straight-life annuity.* A plan provides for normal retirement at age 65. If a participant terminates employment at or after age 55 with 25 years of service, the plan will pay an unreduced early retirement benefit, plus a temporary supplement of $400 per month until the participant reaches age 62. When the plan's contributing sponsor files a bankruptcy petition in 2008, a participant who is

still working has a vested, accrued benefit of $1,500 per month (as a straight-life annuity) and has satisfied the age and service requirements for the unreduced early retirement benefit. The participant retires eight months later, when his vested, accrued benefit is $1,530 per month (as a straight-life annuity). He elects to receive his benefit as a straight-life annuity, and begins receiving a total benefit of $1,930: His $1,530 accrued benefit plus the $400 temporary supplement. The plan terminates six months later, during the sponsor's bankruptcy. No Title IV limitations apply to the participant's benefit, other than the limitation in paragraph (a)(1) of this section. PBGC will guarantee $1,500, the amount of the participant's accrued benefit (as a straight-life annuity) as of the bankruptcy filing date.

(ii) *Joint-and-survivor annuity.* The facts are the same as Example (i) (paragraph (e)(2)(i) of this section), except that the participant elects to receive his benefit as a 50% joint-and-survivor annuity. Before plan termination, the participant was receiving a total benefit of $1,777: His $1,530 accrued benefit, reduced by 10% for the survivor benefit, plus the $400 temporary supplement. From the termination date until the participant reaches age 62, PBGC will guarantee $1,500: The $1,500 accrued benefit (as a straight-life annuity) as of the bankruptcy filing date, reduced to $1,350 to reflect the 10% reduction for the survivor benefit, plus $150 of the temporary supplement that, in combination with the $1,350, does not exceed the $1,500 accrued-at-normal limit. When the participant reaches age 62, his guaranteed benefit is reduced to $1,350, because under plan provisions the temporary supplement ceases at that time.

[61 FR 34028, July 1, 1996, as amended at 67 FR 16956, Apr. 8, 2002; 76 FR 34602, June 14, 2011]

§ 4022.22 Maximum guaranteeable benefit.

(a) *In general.* Subject to section 4022B of ERISA and part 4022B of this chapter, and except as provided in paragraph (b) of this section, benefits payable with respect to a participant under a plan shall be guaranteed only to the extent that such benefits do not exceed the actuarial value of a benefit in the form of a life annuity payable in monthly installments, commencing at age 65, equal to the lesser of—

(1) One-twelfth of the participant's average annual gross income from his employer during either his highest-paid five consecutive calendar years in which he was an active participant under the plan, or if he was not an active participant throughout the entire such period, the lesser number of calendar years within that period in which he was an active participant under the plan; or

(2) $750 multiplied by the fraction x/$13,200 where ''x'' is the Social Security contribution and benefit base determined under section 230 of the Social Security Act in effect at the termination date of the plan.

(b) *PPA 2006 bankruptcy termination.* In a PPA 2006 bankruptcy termination—

(1) The five-year period described in paragraph (a)(1) of this section shall not include any calendar years that end after the bankruptcy filing date.

(2) ''Bankruptcy filing date'' is substituted for ''termination date of the plan'' in paragraph (a)(2) of this section. Example: A contributing sponsor files a bankruptcy petition in 2007. The sponsor's plan terminates in a distress termination with a termination date in 2008. PBGC will compute participants' maximum guaranteeable benefits based on the amount determined under paragraph (a)(2) for 2007 ($4,125.00 as a straight-life annuity starting at age 65).

(c) *Gross income.* For purposes of paragraph (a)(1) of this section—

(1) Gross income means ''earned income'' as defined in section 911(d)(2) of the Code, determined without regard to any community property laws.

(2) If the plan is one to which more than one employer contributes, and during any calendar year the participant received gross income from more than one such contributing employer, then the amounts so received shall be aggregated in determining the participant's gross income for the calendar year.

[76 FR 34602, June 14, 2011]

§ 4022.23 Computation of maximum guaranteeable benefits.

(a) *General.* Where a benefit is payable in any manner other than as a monthly benefit payable for life commencing at age 65, the maximum guaranteeable monthly amount of such benefit shall be computed by applying the applicable factor or factors set forth in paragraphs (c)–(e) of this section to the monthly amount computed under § 4022.22. In the case of a step-down life annuity, the maximum guaranteeable monthly amount of such benefit shall be computed in accordance with paragraph (f) of this section.

(b) *Application of adjustment factors to monthly amount computed under § 4022.22.* (1) Each percentage increase or decrease computed under paragraphs (c), (d), and (e) of this section shall be added to or subtracted from a base of 1.00, and the resulting amounts shall be multiplied.

(2) The monthly amount computed under § 4022.22 shall be multiplied by the product computed pursuant to paragraph (b)(1) of this section in order to determine the participant's and/or beneficiary's maximum benefit guaranteeable.

(c) *Annuitant's age factor.* If a participant or the beneficiary of a deceased participant is entitled to and chooses to receive his benefit at an age younger than 65, the monthly amount computed under § 4022.22 shall be reduced by the following amounts for each month up to the number of whole months below age 65 that corresponds to the later of the participant's age at the termination date or his age at the time he begins to receive the benefit: For each of the 60 months immediately preceding the 65th birthday, the reduction shall be 7/12 of 1%; For each of the 60 months immediately preceding the 60th birthday, the reduction shall be 4/12 of 1%; For each of the 120 months immediately preceding the 55th birthday, the reduction shall be 2/12 of 1%; and For each succeeding 120 months period, the monthly percentage reduction shall be ½ of that used for the preceding 120 month period.

(d) *Factor for benefit payable in a form other than as a life annuity.* When a benefit is in a form other than a life annuity payable in monthly installments, the monthly amount computed under § 4022.22 shall be adjusted by the appropriate factors on a case-by-case basis by PBGC. This paragraph sets forth the adjustment factors to be used for several common benefit forms payable in monthly installments.

(1) *Period certain and continuous annuity.* A period certain and continuous annuity means an annuity which is payable in periodic installments for the participant's life, but for not less than a specified period of time whether or not the participant dies during that period. The monthly amount of a period certain and continuous annuity computed under § 4022.22 shall be reduced by the following amounts for each month of the period certain subsequent to the termination date:

For each month up to 60 months deduct 1/24 of 1%;

For each month beyond 60 months deduct 1/12 of 1%.

(i) A cash refund annuity means an annuity under which if the participant dies prior to the time when he has received pension payments equal to a fixed sum specified in the plan, then the balance is paid as a lump-sum death benefit. A cash refund annuity shall be treated as a benefit payable for a period certain and continuous. The period of certainty shall be computed by dividing the amount of the lump-sum refund by the monthly amount to which the participant is entitled under the terms of the plan.

(ii) An installment refund annuity means an annuity under which if the participant dies prior to the time he has received pension payments equal to a fixed sum specified in the plan, then the balance is paid as a death benefit in periodic installments equal in amount to the participant's periodic benefit. An installment refund annuity shall be treated as a benefit payable for a period certain and continuous. The period of certainty shall be computed by dividing the amount of the remaining refund by the monthly amount to which the participant is entitled under the terms of the plan.

(2) *Joint and survivor annuity (contingent basis).* A joint and survivor annuity (contingent basis) means an annuity which is payable in periodic installments to a participant for his life and

upon his death is payable to his beneficiary for the beneficiary's life in the same or in a reduced amount. The monthly amount of a joint and survivor annuity (contingent basis) computed under § 4022.22 shall be reduced by an amount equal to 10% plus 2/10 of 1% for each percentage point in excess of 50% of the participant's benefit that will continue to be paid to the beneficiary. If the benefit payable to the beneficiary is less than 50 percent of the participant's benefit, PBGC shall provide the adjustment factors to be used.

(3) *Joint and survivor annuity (joint basis).* A joint and survivor annuity (joint basis) means an annuity which is payable in periodic installments to a participant and upon his death or the death of his beneficiary is payable to the survivor for the survivor's life in the same or in a reduced amount. The monthly amount of a joint and survivor annuity (joint basis) computed under § 4022.22 shall be reduced by an amount equal to 4/10 of 1% for each percentage point in excess of 50% of the participant's original benefit that will continue to be paid to the survivor. If the benefit payable to the survivor is less than 50 percent of the participant's original benefit, PBGC shall provide the adjustment factors to be used.

(e) When a benefit is payable in a form described in paragraph (d)(2) or (3) of this section, and the beneficiary's age is different from the participant's age, by 15 years or less, the monthly amount computed under § 4022.22 shall be adjusted by the following amounts: If the beneficiary is younger than the participant, deduct 1% for each year of the age difference; If the beneficiary is older than the participant, add ½ of 1% for each year of the age difference. In computing the difference in ages, years over 65 years of age shall not be counted. If the difference in age between the beneficiary and the participant is greater than 15 years, PBGC shall provide the adjustment factors to be used.

(f) *Step-down life annuity.* A step-down life annuity means an annuity payable in a certain amount for the life of the participant plus a temporary additional amount payable until the participant attains an age specified in the plan.

(1) The temporary additional amount payable under a step-down life annuity shall be converted to a life annuity payable in monthly installments by multiplying the appropriate factor based on the participant's age and the number of remaining years of the temporary additional benefit by the amount of the temporary additional benefit. The factors to be used are set forth in the table below. The amount of the monthly benefit so calculated shall be added to the level amount of the monthly benefit payable for life to determine the level-life annuity that is equivalent to the step-down life annuity.

FACTORS FOR CONVERTING TEMPORARY ADDITIONAL BENEFIT UNDER STEP-DOWN LIFE ANNUITY

Age of participant[1] at the later of the date the temporary additional benefit commences or the date of plan termination	Number of years temporary additional benefit is payable under the plan as of the date of plan termination[2]									
	1	2	3	4	5	6	7	8	9	10
45	0.060	0.117	0.170	0.220	0.268	0.315	0.355	0.395	0.435	0.475
46	.061	.119	.173	.224	.273	.321	.362	.403	.444	.485
47	.062	.121	.176	.228	.278	.327	.369	.411	.453	.495
48	.063	.123	.179	.232	.283	.333	.376	.419	.462	.505
49	.064	.125	.182	.236	.288	.339	.383	.427	.471	.515
50	.065	.127	.185	.240	.293	.345	.390	.435	.480	.525
51	.066	.129	.188	.244	.298	.351	.397	.443	.489	.535
52	.067	.131	.191	.248	.303	.357	.404	.451	.498	.545
53	.068	.133	.194	.252	.308	.363	.411	.459	.507	.555
54	.069	.135	.197	.256	.313	.369	.418	.467	.516	.565
55	.070	.137	.200	.260	.318	.375	.425	.475	.525	.575
56	.072	.141	.206	.268	.328	.387	.439	.491	.543	.....
57	.074	.145	.212	.276	.338	.399	.453	.507	.....	.....
58	.076	.149	.218	.284	.348	.411	.467	.....	.....	.....
59	.078	153	.224	.292	.358	.423	.....	.....	.....	.....
60	.080	.157	.230	.300	.368	.....	.....	.....	.....	.....
61	.082	.161	.236	.308	.....	.....	.....	.....	.....	.....
62	.084	.165	.242	.....	.....	.....	.....	.....	.....	.....
63	.086	.169	.....	.....	.....	.....	.....	.....	.....	.....

FACTORS FOR CONVERTING TEMPORARY ADDITIONAL BENEFIT UNDER STEP-DOWN LIFE ANNUITY—Continued

Age of participant[1] at the later of the date the temporary additional benefit commences or the date of plan termination	Number of years temporary additional benefit is payable under the plan as of the date of plan termination[2]									
	1	2	3	4	5	6	7	8	9	10
64	.088	.....	.....	.....	.....	.....	.....	.....	.....	.....

[1] At last birthday.
[2] If the benefit is payable for less than 1 yr, the appropriate factor is obtained by multiplying the factor for 1 yr by a fraction, the numerator of which is the number of months the benefit is payable, and the denominator of which is 12. If the benefit is payable for 1 or more whole years, plus an additional number of months less than 12, the appropriate factor is obtained by linear interpolation between the factor for the number of whole years the benefit is payable and the factor for the next year.

(2) If a participant is entitled to and chooses to receive a step-down life annuity at an age younger than 65, the monthly amount computed under § 4022.22 shall be adjusted by applying the factors set forth in paragraph (c) of this section in the manner described in paragraph (b) of this section.

(3) If the level-life monthly benefit calculated pursuant to paragraph (f)(1) of this section exceeds the monthly amount calculated pursuant to paragraph (f)(2) of this section, then the monthly maximum benefit guaranteeable shall be a step-down life annuity under which the monthly amount of the temporary additional benefit and the amount of the monthly benefit payable for life, respectively, shall bear the same ratio to the monthly amount of the temporary additional benefit and the monthly benefit payable for life provided under the plan, respectively, as the monthly benefit calculated pursuant to paragraph (f)(2) of this section bears to the monthly benefit calculated pursuant to paragraph (f)(1) of this section.

(g) *PPA 2006 bankruptcy termination.* (1) In a PPA 2006 bankruptcy termination, except as provided in the next sentence, ''bankruptcy filing date'' is substituted for ''termination date'' and ''date of plan termination'' each place that ''termination date'' or ''date of plan termination'' appears in paragraphs (c), (d), and (f) of this section. In any case in which an event (such as the death of a participant or beneficiary who was alive on the bankruptcy filing date) that affects who is receiving or will receive a benefit from PBGC has occurred on or before the termination date, PBGC will determine the factors in paragraphs (d), (e), and (f) based on the form of benefit that was being paid (or was payable) and the person who was receiving or was entitled to receive the benefit from PBGC as of the termination date. (The case of Participant C in the example below illustrates this exception.)

(2) *Example.* (i) *Facts.* The contributing sponsor of a plan files a bankruptcy petition in July 2007, and the sponsor's plan terminates in a PBGC-initiated termination with a termination date in July 2008. At the bankruptcy filing date:

(A) Participant A was age 64 and receiving a benefit from the plan in the form of a 10-year certain-and-continuous annuity, with 4 years remaining in the certain period.

(B) Participant B was age 60 and 6 months and was still working. She began receiving a benefit from the plan in the form of a 50% joint-and-survivor annuity when she turned 61 in January 2008. Her spouse was the same age as she.

(C) Participant C was age 60 and was receiving a $3,000/month benefit from the plan in the form of a 50% joint-and-survivor annuity, with his spouse, age 58, as his beneficiary. Participant C he died in February 2008 and in March 2008 his spouse began receiving a 50% survivor annuity of $1,500/month.

(D) Participant D was age 59 and was still working; he began receiving a straight-life annuity from the PBGC in July 2010 when he was 62 years old.

(ii) *Conclusions.* In accordance with § 4022.22(b)(2), PBGC computes the maximum guaranteeable monthly benefit for Participants A, B, and D and for the spouse of Participant C based on the $4,125.00 amount determined under § 4022.22(a)(2) for 2007. (The gross-income-based limitation in § 4022.22(a)(1)

does not apply to any of these participants.)

(A) Participant A's maximum guaranteeable monthly benefit is $3,759.53 [$4,125.00 × .93 (7% reduction for a benefit starting at age 64) × .98 (2% reduction for a certain-and-continuous annuity with 4 years remaining in the certain period)].

(B) Participant B's maximum guaranteeable monthly benefit is $2,673.00 [$4,125.00 × .72 (28% reduction for a benefit starting at age 61) × .90 (10% reduction due to the 50% joint-and-survivor feature)].

(C) Participant C's spouse's maximum guaranteeable monthly benefit is $2,351.25 [$4,125.00 × .57 (43% reduction for a benefit starting at age 58; no reduction for the form of benefit because the spouse's survivor benefit is a straight-life annuity)]. Because that amount exceeds the spouse's $1,500 monthly survivor benefit, the spouse's benefit is not reduced by the maximum guaranteeable benefit limitation.

(D) Participant D's maximum guaranteeable monthly benefit is $3,258.75 [$4,125.00 × .79 (21% reduction for a benefit starting at age 62)].

[61 FR 34028, July 1, 1996; 61 FR 36626, July 12, 1996; 76 FR 34603, June 14, 2011]

§ 4022.24 Benefit increases.

(a) *Scope*. This section applies:

(1) To all benefit increases, as defined in § 4022.2, payable with respect to a participant other than a substantial owner, which have been in effect for less than five years preceding the termination date; and

(2) To all benefit increases payable with respect to a substantial owner, which have been in effect for less than 30 years preceding the termination date.

(b) *General rule*. Benefit increases described in paragraph (a) of this section shall be guaranteed only to the extent provided in § 4022.25 with respect to a participant other than a substantial owner and in § 4022.26 with respect to a participant who is a substantial owner.

(c) *Computation of guaranteeable benefit increases*. Except as provided in paragraph (d) of this section pertaining to multiple benefit increases, the amount of a guaranteeable benefit increase shall be the amount, if any, by which the monthly benefit calculated pursuant to paragraph (c)(1) of this section (the monthly benefit provided under the terms of the plan as of the termination date, as limited by § 4022.22) exceeds the monthly benefit calculated pursuant to paragraph (c)(4) of this section (the monthly benefit which would have been payable on the termination date if the benefit provided subsequent to the increase were equivalent, as of the date of the increase, to the benefit provided prior to the increase).

(1) Determine the amount of the monthly benefit payable on the termination date (or, in the case of a deferred benefit, the monthly benefit which will become payable thereafter) under the terms of the plan subsequent to the increase, using service credited to the participant as of the termination date, that is guaranteeable pursuant to § 4022.22;

(2) Determine, as of the date of the benefit increase, in accordance with the provisions of § 4022.23, the factors which would be used to calculate the monthly maximum benefit guaranteeable (i) under the terms of the plan prior to the increase and (ii) under the terms of the plan subsequent to the increase. However, when the benefit referred to in paragraph (c)(2)(ii) of this section is a joint and survivor benefit deferred as of the termination date and there is no beneficiary on that date, the factors computed in paragraph (c)(2)(ii) of this section shall be determined as if the benefit were payable only to the participant. Each set of factors determined under this paragraph shall be stated in the manner set forth in § 4022.23(b)(1);

(3) Multiply the monthly benefit which would have been payable (or, in the case of a deferred benefit, would have become payable) under the terms of the plan prior to the increase based on service credited to the participant as of the termination date by a fraction, the numerator of which is the product of the factors computed pursuant to paragraph (c)(2)(ii) of this section and the denominator of which is the product of the factors computed pursuant to paragraph (c)(2)(i) of this section.

(4) Calculate the amount of the monthly benefit which would be payable on the termination date if the monthly benefit computed in paragraph (c)(3) of this section had been payable commencing on the date of the benefit increase (or, in the case of a deferred benefit, would have become payable thereafter). In the case of a benefit which does not become payable until subsequent to the termination date, the amount of the monthly benefit determined pursuant to this paragraph is the same as the amount of the monthly benefit calculated pursuant to paragraph (c)(3) of this section.

(d) *Multiple benefit increases.* (1) Where there has been more than one benefit increase described in paragraph (a) of this section, the amounts of guaranteeable benefit increases shall be calculated beginning with the earliest increase, and each such amount (except for the amount resulting from the final benefit increase) shall be multiplied by a fraction, the numerator of which is the product of the factors, stated in the manner set forth in § 4022.23(b)(1), used to calculate the monthly maximum guaranteeable benefit under § 4022.22 and the denominator of which is the product of the factors used in the calculation under paragraph (c)(2)(i) of this section.

(2) Each benefit increase shall be treated separately for the purposes of § 4022.25, except as otherwise provided in paragraph (d) of that section, and for the purposes of § 4022.26, as appropriate.

(e) Except as provided in § 4022.27(c), for the purposes of §§ 4022.22 through 4022.28, a benefit increase is deemed to be in effect commencing on the later of its adoption date or its effective date.

(f) *PPA 2006 bankruptcy termination.* In a PPA 2006 bankruptcy termination, except as provided in the next sentence, ''bankruptcy filing date'' is substituted for ''termination date'' each place that ''termination date'' appears in paragraphs (a) and (c) of this section. In any case in which an event (such as the death of a participant or beneficiary who was alive on the bankruptcy filing date) that affects who is receiving or will receive a benefit from PBGC has occurred on or before the termination date, PBGC will compute the benefit based on the form of benefit that was being paid (or was payable) and the person who was receiving or was entitled to receive the benefit from PBGC as of the termination date, consistent with § 4022.23(g).

[61 FR 34028, July 1, 1996; 61 FR 36626, July 12, 1996, as amended at 62 FR 67728, Dec. 30, 1997; 76 FR 34603, June 14, 2011; 79 FR 25672, May 6, 2014]

§ 4022.25 Five-year phase-in of benefit guarantee for participants other than substantial owners.

(a) *Scope.* This section applies to the guarantee of benefit increases which have been in effect for less than five years with respect to participants other than substantial owners.

(b) *Phase-in formula.* The amount of a benefit increase computed pursuant to § 4022.24 shall be guaranteed to the extent provided in the following formula: the number of years the benefit increase has been in effect, not to exceed five, multiplied by the greater of (1) 20 percent of the amount computed pursuant to § 4022.24; or (2) $20 per month.

(c) *Computation of years.* In computing the number of years a benefit increase has been in effect, each complete 12-month period ending on or before the termination date during which such benefit increase was in effect constitutes one year.

(d) *Multiple benefit increases.* In applying the formula contained in paragraph (b) of this section, multiple benefit increases within any 12-month period ending on or before the termination date and calculated from that date are aggregated and treated as one benefit increase.

(e) Notwithstanding the provisions of paragraph (b) of this section, a benefit increase described in paragraph (a) of this section shall be guaranteed only if PBGC determines that the plan was terminated for a reasonable business purpose and not for the purpose of obtaining the payment of benefits by PBGC.

(f) *PPA 2006 bankruptcy termination.* In a PPA 2006 bankruptcy termination, ''bankruptcy filing date'' is substituted for ''termination date'' each place that ''termination date'' appears in paragraphs (c) and (d) of this section. Example: A plan amendment that was adopted and effective in February 2007

increased a participant's benefit by $300 per month (as computed under § 4022.24). The contributing sponsor of the plan filed a bankruptcy petition in March 2009 and the plan has a termination date in April 2010. PBGC's guarantee of the participant's benefit increase is limited to $120 ($300 × 40%), because the increase was made more than 2 years but less than 3 years before the bankruptcy filing date.

[61 FR 34028, July 1, 1996, as amended at 67 FR 16956, Apr. 8, 2002; 76 FR 34603, June 14, 2011]

§ 4022.26 Phase-in of benefit guarantee for participants who are substantial owners.

(a) *Scope*. This section shall apply to the guarantee of all benefits described in subpart A (subject to the limitations in § 4022.21) with respect to participants who are substantial owners at the termination date or who were substantial owners at any time within the 5-year period preceding that date.

(b) *Phase-in formula when there have been no benefit increases*. Benefits provided by a plan under which there has been no benefit increase, other than the adoption of the plan, shall be guaranteed to the extent provided in the following formula: The monthly amount computed under § 4022.22 multiplied by a fraction not to exceed 1, the numerator of which is the number of full years prior to the termination date that the substantial owner was an active participant under the plan, and the denominator of which is 30. Active participation under a plan commences at the later of the date on which the plan is adopted or becomes effective.

(c) *Phase-in formula when there have been benefit increases*. If there has been a benefit increase under the plan, other than the adoption of the plan, benefits provided by each such increase shall be guaranteed to the extent provided in the following formula: The amount of the guaranteeable benefit increase computed under § 4022.24 multiplied by a fraction not to exceed 1, the numerator of which is the number of full years prior to the termination date that the benefit increase was in effect and during which the substantial owner was an active participant under the plan, and the denominator of which is 30. However, in no event shall the total benefits guaranteed under all such benefit increases exceed the benefits which are guaranteed under paragraph (b) of this section with respect to a plan described therein.

(d) For the purpose of computing the benefits guaranteed under this section, in the case of a substantial owner who becomes an active participant under a plan after a benefit increase (other than the adoption of the plan) has been put into effect, the plan as it exists at the time he commences his participation shall be deemed to be the original plan with respect to him.

[61 FR 34028, July 1, 1996, as amended at 62 FR 67729, Dec. 30, 1997]

§ 4022.27 Phase-in of guarantee of unpredictable contingent event benefits.

(a) *Scope*. This section applies to a benefit increase, as defined in § 4022.2, that is an unpredictable contingent event benefit (UCEB) and that is payable with respect to an unpredictable contingent event (UCE) that occurs after July 26, 2005.

(1) Examples of benefit increases within the scope of this section include unreduced early retirement benefits or other early retirement subsidies, or other benefits to the extent that such benefits would not be payable but for the occurrence of one or more UCEs.

(2) Examples of UCEs within the scope of this section include full and partial closings of plants or other facilities, and permanent workforce reductions, such as permanent layoffs. Permanent layoffs include layoffs during which an idled employee continues to earn credited service (creep-type layoff) for a period of time at the end of which the layoff is deemed to be permanent. Permanent layoffs also include layoffs that become permanent upon the occurrence of an additional event such as a declaration by the employer that the participant's return to work is unlikely or a failure by the employer to offer the employee suitable work in a specified area.

(3) The examples in this section are not an exclusive list of UCEs or UCEBs and are not intended to narrow the statutory definitions, as further delineated in Treasury Regulations.

(b) *Facts and circumstances.* If PBGC determines that a benefit is a shutdown benefit or other type of UCEB, the benefit will be treated as a UCEB for purposes of this subpart. PBGC will make such determinations based on the facts and circumstances, consistent with these regulations; how a benefit is characterized by the employer or other parties may be relevant but is not determinative.

(c) *Date phase-in begins.* (1) The date the phase-in of PBGC's guarantee of a UCEB begins is determined in accordance with subpart B of this part. For purposes of this subpart, a UCEB is deemed to be in effect as of the latest of—

(i) The adoption date of the plan provision that provides for the UCEB,

(ii) The effective date of the UCEB, or

(iii) The date the UCE occurs.

(2) The date the phase-in of PBGC's guarantee of a UCEB begins is not affected by any delay that may occur in placing participants in pay status due to removal of a restriction under section 436(b) of the Code. See the example in paragraph (e)(8) of this section.

(d) *Date UCE occurs.* For purposes of this section, PBGC will determine the date the UCE occurs based on plan provisions and other facts and circumstances, including the nature and level of activity at a facility that is closing and the permanence of the event. PBGC will also consider, to the extent relevant, statements or determinations by the employer, the plan administrator, a union, an arbitrator under a collective bargaining agreement, or a court, but will not treat such statements or determinations as controlling.

(1) The date a UCE occurs is determined on a participant-by-participant basis, or on a different basis, such as a facility-wide or company-wide basis, depending upon plan provisions and the facts and circumstances. For example, a benefit triggered by a permanent layoff of a participant would be determined with respect to each participant, and thus layoffs that occur on different dates would generally be distinct UCEs. In contrast, a benefit payable only upon a complete plant shutdown would apply facility-wide, and generally the shutdown date would be the date of the UCE for all participants who work at that plant. Similarly, a benefit payable only upon the complete shutdown of the employer's entire operations would apply plan-wide, and thus the shutdown date of company operations generally would be the date of the UCE for all participants.

(2) For purposes of paragraph (c)(1)(iii) of this section, if a benefit is contingent upon more than one UCE, PBGC will apply the rule under Treas. Reg. §1.436–1(b)(3)(ii) (26 CFR 1.436–1(b)(3)(ii)) (i.e., the date the UCE occurs is the date of the latest UCE).

(e) *Examples.* The following examples illustrate the operation of the rules in this section. Except as provided in Example 8, no benefit limitation under Code section 436 applies in any of these examples. Unless otherwise stated, the termination is not a PPA 2006 bankruptcy termination.

Example 1. Date of UCE. (i) *Facts:* On January 1, 2006, a Company adopts a plan that provides an unreduced early retirement benefit for participants with specified age and service whose continuous service is broken by a permanent plant closing or permanent layoff that occurs on or after January 1, 2007. On January 1, 2013, the Company informally and without announcement decides to close Facility A within a two-year period. On January 1, 2014, the Company's Board of Directors passes a resolution directing the Company's officers to close Facility A on or before September 1, 2014. On June 1, 2014, the Company issues a notice pursuant to the Worker Adjustment and Retraining Notification (WARN) Act, 29 U.S.C. 2101, *et seq.*, that Facility A will close, and all employees will be permanently laid off, on or about August 1, 2014. The Company and the Union representing the employees enter into collective bargaining concerning the closing of Facility A and on July 1, 2014, they jointly agree and announce that Facility A will close and employees who work there will be permanently laid off as of November 1, 2014. However, due to unanticipated business conditions, Facility A continues to operate until December 31, 2014, when operations cease and all employees are permanently laid off. The plan terminates as of December 1, 2015.

(ii) *Conclusion:* PBGC would determine that the UCE is the facility closing and permanent layoff that occurred on December 31, 2014. Because the date that the UCE occurred (December 31, 2014) is later than both the date the plan provision that established the UCEB was adopted (January 1, 2006) and the date the UCEB became effective (January 1,

2007), December 31, 2014, would be the date the phase-in period under ERISA section 4022 begins. In light of the plan termination date of December 1, 2015, the guarantee of the UCEBs of participants laid off on December 31, 2014, would be 0 percent phased in.

Example 2. Sequential layoffs. (i) *Facts:* The same facts as Example 1, with these exceptions: Not all employees are laid off on December 31, 2014. The Company and Union agree to and subsequently implement a shutdown in which employees are permanently laid off in stages—one third of the employees are laid off on October 31, 2014, another third are laid off on November 30, 2014, and the remaining one-third are laid off on December 31, 2014.

(ii) *Conclusion:* Because the plan provides that a UCEB is payable in the event of either a permanent layoff or a plant shutdown, PBGC would determine that phase-in begins on the date of the UCE applicable to each of the three groups of employees. Because the first two groups of employees were permanently laid off before the plant closed, October 31, 2014, and November 30, 2014, are the dates that the phase-in period under ERISA section 4022 begins for those groups. Because the third group was permanently laid off on December 31, 2014, the same date the plant closed, the phase-in period would begin on that date for that group. Based on the plan termination date of December 1, 2015, participants laid off on October 31, 2014, and November 30, 2014, would have 20 percent of the UCEBs (or $20 per month, if greater) guaranteed under the phase-in rule. The guarantee of the UCEBs of participants laid off on December 31, 2014, would be 0 percent phased in.

Example 3. Skeleton shutdown crews. (i) *Facts:* The same facts as Example 1, with these exceptions: The plan provides for an unreduced early retirement benefit for age/service-qualified participants only in the event of a break in continuous service due to a permanent and complete plant closing. A minimal skeleton crew remains to perform primarily security and basic maintenance functions until March 31, 2015, when skeleton crew members are permanently laid off and the facility is sold to an unrelated investment group that does not assume the plan or resume business operations at the facility. The plan has no specific provision or past practice governing benefits of skeleton shutdown crews. The plan terminates as of January 1, 2015.

(ii) *Conclusion:* Because the continued employment of the skeleton crew does not effectively continue operations of the facility, PBGC would determine that there is a permanent and complete plant closing (for purposes of the plan's plant closing provision) as of December 31, 2014, which is the date the phase-in period under ERISA section 4022 begins with respect to employees who incurred a break in continuous service at that time. The UCEB of those participants would be a nonforfeitable benefit as of the plan termination date, but PBGC's guarantee of the UCEB would be 0 percent phased in. In the case of the skeleton crew members, such participants would not be eligible for the UCEB because they did not incur a break in continuous service until after the plan termination date. (If the plan had a provision that there is no shutdown until all employees, including any skeleton crew are terminated, or if the plan were reasonably interpreted to so provide in light of past practice, PBGC would determine that the date that the UCE occurred was after the plan termination date. Thus the UCEB would not be a nonforfeitable benefit as of the plan termination date and therefore would not be guaranteeable.)

Example 4. Creep-type layoff benefit/bankruptcy of contributing sponsor. (i) *Facts:* A plan provides that participants who are at least age 55 and whose age plus years of continuous service equal at least 80 are entitled to an unreduced early retirement benefit if their continuous service is broken due to a permanent layoff. The plan further provides that a participant's continuous service is broken due to a permanent layoff when the participant is terminated due to the permanent shutdown of a facility, or the participant has been on layoff status for two years. These provisions were adopted and effective in 1990. Participant A is 56 years old and has 25 years of continuous service when he is laid off in a reduction-in-force on May 15, 2014. He is not recalled to employment, and on May 15, 2016, under the terms of the plan, his continuous service is broken due to the layoff. He goes into pay status on June 1, 2016, with an unreduced early retirement benefit. The contributing sponsor of Participant A's plan files a bankruptcy petition under Chapter 11 of the U.S. Bankruptcy Code on September 1, 2017, and the plan terminates during the bankruptcy proceedings with a termination date of October 1, 2018. Under section 4022(g) of ERISA, because the plan terminated while the contributing sponsor was in bankruptcy, the five-year phase-in period ended on the bankruptcy filing date.

(ii) *Conclusion:* PBGC would determine that the guarantee of the UCEB is phased in beginning on May 15, 2016, the date of the later of the two UCEs necessary to make this benefit payable (i.e., the first UCE is the initial layoff and the second UCE is the expiration of the two-year period without rehire). Since that date is more than one year (but less than two years) before the September 1, 2017, bankruptcy filing date, 20 percent of Participant A's UCEB (or $20 per month, if greater) would be guaranteed under the phase-in rule.

Example 5. Creep-type layoff benefit with provision for declaration that return to work unlikely. (i) *Facts:* A plan provides that participants who are at least age 60 and have at

least 20 years of continuous service are entitled to an unreduced early retirement benefit if their continuous service is broken by a permanent layoff. The plan further provides that a participant's continuous service is broken by a permanent layoff if the participant is laid off and the employer declares that the participant's return to work is unlikely. Participants may earn up to 2 years of credited service while on layoff. The plan was adopted and effective in 1990. On March 1, 2014, Participant B, who is age 60 and has 20 years of service, is laid off. On June 15, 2014, the employer declares that Participant B's return to work is unlikely. Participant B retires and goes into pay status as of July 1, 2014. The employer files for bankruptcy on September 1, 2016, and the plan terminates during the bankruptcy.

(ii) *Conclusion:* PBGC would determine that the phase-in period of the guarantee of the UCEB would begin on June 15, 2014—the later of the two UCEs necessary to make the benefit payable (i.e., the first UCE is the initial layoff and the second UCE is the employer's declaration that it is unlikely that Participant B will return to work). The phase-in period would end on September 1, 2016, the date of the bankruptcy filing. Thus 40 percent of Participant B's UCEB (or $40 per month, if greater) would be guaranteed under the phase-in rule.

Example 6. Shutdown benefit with special post-employment eligibility provision. (i) *Facts:* A plan provides that, in the event of a permanent shutdown of a plant, a participant age 60 or older who terminates employment due to the shutdown and who has at least 20 years of service is entitled to an unreduced early retirement benefit. The plan also provides that a participant with at least 20 years of service who terminates employment due to a plant shutdown at a time when the participant is under age 60 also will be entitled to an unreduced early retirement benefit, provided the participant's commencement of benefits is on or after attainment of age 60 and the time required to attain age 60 does not exceed the participant's years of service with the plan sponsor. The plan imposes no other conditions on receipt of the benefit. Plan provisions were adopted and effective in 1990. On January 1, 2014, Participant C's plant is permanently shut down. At the time of the shutdown, Participant C had 20 years of service and was age 58. On June 1, 2015, Participant C reaches age 60 and retires. The plan terminates as of September 1, 2015.

(ii) *Conclusion:* PBGC would determine that the guarantee of the shutdown benefit is phased in from January 1, 2014, which is the date of the only UCE (the permanent shutdown of the plant) necessary to make the benefit payable. Thus 20 percent of Participant C's UCEB (or $20 per month, if greater) would be guaranteed under the phase-in rule.

Example 7. Phase-in of retroactive UCEB. (i) *Facts:* As the result of a settlement in a class-action lawsuit, a plan provision is adopted on September 1, 2014, to provide that age/service-qualified participants are entitled to an unreduced early retirement benefit if permanently laid off due to a plant shutdown occurring on or after January 1, 2014. Benefits under the provision are payable prospectively only, beginning March 1, 2015. Participant A, who was age/service-qualified, was permanently laid off due to a plant shutdown occurring on January 1, 2014, and therefore he is scheduled to be placed in pay status as of March 1, 2015. The unreduced early retirement benefit is paid to Participant A beginning on March 1, 2015. The plan terminates as of February 1, 2017.

(ii) *Conclusion:* PBGC would determine that the guarantee of the UCEB is phased in beginning on March 1, 2015. This is the date the benefit was effective (since it was the first date on which the new benefit was payable), and it is later than the adoption date of the plan provision (September 1, 2014) and the date of the UCE (January 1, 2014). Thus 20 percent of Participant A's UCEB (or $20 per month, if greater) would be guaranteed under the phase-in rule.

Example 8. Removal of IRC section 436 restriction. (i)(A) *Facts:* A plan provision was adopted on September 1, 1989, to provide that age/service-qualified participants are entitled to an unreduced early retirement benefit if permanently laid off due to a plant shutdown occurring after January 1, 1990. Participant A, who was age/service-qualified, was permanently laid off due to a plant shutdown occurring on April 15, 2014. The plan is a calendar year plan.

(B) Under the rules of Code section 436 (ERISA section 206(g)) and Treasury regulations thereunder, a plan cannot provide a UCEB payable with respect to an unpredictable contingent event, if the event occurs during a plan year in which the plan's adjusted funding target attainment percentage is less than 60%. On March 17, 2014, the plan's enrolled actuary issued a certification stating that the plan's adjusted funding target attainment percentage for 2014 is 58%. Therefore, the plan restricts payment of the unreduced early retirement benefit payable with respect to the shutdown on April 15, 2014.

(C) On August 15, 2014, the plan sponsor makes an additional contribution to the plan that is designated as a contribution under Code section 436(b)(2) to eliminate the restriction on payment of the shutdown benefits. On September 15, 2014, the plan's enrolled actuary issues a certification stating that, due to the additional section 436(b)(2) contribution, the plan's adjusted funding target attainment percentage for 2014 is 60%. On October 1, 2014, Participant A is placed in pay status for the unreduced early retirement benefit and, as required under Code

section 436 and Treasury regulations thereunder, is in addition paid retroactively the unreduced benefit for the period May 1, 2014 (the date the unreduced early retirements would have become payable) through September 1, 2014. The plan terminates as of September 1, 2016.

(ii) *Conclusion:* PBGC would determine that the guarantee of the UCEB is phased in beginning on April 15, 2014, the date the UCE occurred. Because April 15, 2014, is later than both the date the UCEB was adopted (September 1, 1989) and the date the UCEB became effective (January 1, 1990), it would be the date the phase-in period under ERISA section 4022 begins. Commencement of the phase-in period is not affected by the delay in providing the unreduced early retirement benefit to Participant A due to the operation of the rules of Code section 436 and the Treasury regulations thereunder. Thus 40 percent of Participant A's UCEB (or $40 per month, if greater) would be guaranteed under the phase-in rule.

[79 FR 25672, May 6, 2014]

§ 4022.28 Effect of tax disqualification.

(a) *General rule*. Except as provided in paragraph (b) of this section, benefits accrued under a plan after the date on which the Secretary of the Treasury or his delegate issues a notice that any trust which is part of the plan no longer meets the requirements of section 401(a) of the Code or that the plan no longer meets the requirements of section 404(a) of the Code or after the date of adoption of a plan amendment that causes the issuance of such a notice shall not be guaranteed under this part.

(b) *Exceptions*. The restriction on the guarantee of benefits set forth in paragraph (a) of this section shall not apply if:

(1) The Secretary of the Treasury or his delegate issues a notice stating that the original notice referred to in paragraph (a) of this section was erroneous;

(2) The Secretary of the Treasury or his delegate finds that, subsequent to the issuance of the notice referred to in paragraph (a) of this section, appropriate action has been taken with respect to the trust or plan to cause it to meet the requirements of sections 401(a) or 404(a)(2) of the Code, respectively, and issues a subsequent notice stating that the trust or plan meets such requirements; or

(3) The plan amendment is revoked retroactively to its original effective date.

Subpart C—Section 4022(c) Benefits

§ 4022.51 Determination of section 4022(c) benefits in a PPA 2006 bankruptcy termination.

(a) *Amount of unfunded nonguaranteed benefits*. For purposes of this section, and subject to paragraph (b) of this section, a plan's amount of unfunded nonguaranteed benefits means the plan's outstanding amount of benefit liabilities, as defined in section 4001(a)(19) of ERISA, determined as of the plan's termination date. A plan's amount of unfunded nonguaranteed benefits is multiplied by the applicable recovery ratio to determine the aggregate amount to be allocated with respect to participants of the plan under section 4022(c)(1) of ERISA.

(b) *Benefits included in unfunded nonguaranteed benefits*. For purposes of computing benefits under section 4022(c) of ERISA in a PPA 2006 bankruptcy termination, unfunded nonguaranteed benefits are benefits under a plan as of the plan's termination date that are neither guaranteed by PBGC (taking into account section 4022(g) of ERISA) nor funded by the plan's assets (taking into account section 4044(e) of ERISA).

(c) *Determination of recovery ratio*. In a PPA 2006 bankruptcy termination, the recovery ratio under section 4022(c)(3) of ERISA is determined as follows. The numerator is based on PBGC's recoveries under section 4062, 4063, or 4064, valued as of the plan's (or plans') termination date (or dates). The denominator of the recovery ratio is based on the amount of unfunded benefit liabilities, as defined in section 4001(a)(18) of ERISA, as of the plan's (or plans') termination date (or dates).

[76 FR 34603, June 14, 2011]

Subpart D—Benefit Reductions in Terminating Plans

§ 4022.61 Limitations on benefit payments by plan administrator.

(a) *General.* When § 4041.42 of this chapter requires a plan administrator to reduce benefits, the plan administrator shall limit benefit payments in accordance with this section.

(b) *Accrued benefit at normal retirement.* Except to the extent permitted by paragraph (d) of this section, a plan administrator may not pay that portion of a monthly benefit payable with respect to any participant that exceeds the participant's accrued benefit payable at normal retirement age under the plan. For the purpose of applying this limitation, post-retirement benefit increases, such as cost-of-living adjustments, are not considered to increase a participant's benefit beyond his or her accrued benefit payable at normal retirement age.

(c) *Maximum guaranteeable benefit.* Except to the extent permitted by paragraph (d) of this section, a plan administrator may not pay that portion of a monthly benefit payable with respect to any participant, as limited by paragraph (b) of this section, that exceeds the maximum guaranteeable benefit under section 4022(b)(3)(B) of ERISA and § 4022.22(a)(2) of this part, adjusted for age and benefit form, for the year of the proposed termination date. In a PPA 2006 bankruptcy termination, the maximum guaranteeable benefit is determined as of the bankruptcy filing date, in accordance with §§ 4022.22(b) and 4022.23(g).

(d) *Estimated benefit payments.* A plan administrator shall pay the monthly benefit payable with respect to each participant as determined under § 4022.62 or § 4022.63, whichever produces the higher benefit.

(e) *PBGC authority to modify procedures.* In order to avoid abuse of the plan termination insurance system, inequitable treatment of participants and beneficiaries, or the imposition of unreasonable burdens on terminating plans, the PBGC may authorize or direct the use of alternative procedures for determining benefit reductions.

(f) *Examples.* This section is illustrated by the following examples. (For examples addressing issues specific to a PPA 2006 bankruptcy termination, see §§ 4022.21(e), 4022.22(b), and 4022.23(g).)

Example 1. Facts. On October 10, 1992, a plan administrator files with the PBGC a notice of intent to terminate in a distress termination that includes December 31, 1992, as the proposed termination date. A participant who is in pay status on December 31, 1992, has been receiving his accrued benefit of $2,500 per month under the plan. The benefit is in the form of a joint and survivor annuity (contingent basis) that will pay 50 percent of the participant's benefit amount (*i.e.*, $1,250 per month) to his surviving spouse following the death of the participant. On December 31, 1992, the participant is age 66, and his wife is age 56.

Benefit reductions. Paragraph (b) of this section requires the plan administrator to cease paying benefits in excess of the accrued benefit payable at normal retirement age. Because the participant is receiving only his accrued benefit, no reduction is required under paragraph (b).

Paragraph (c) of this section requires the plan administrator to cease paying benefits in excess of the maximum guaranteeable benefit, adjusted for age and benefit form in accordance with the provisions of subpart B. The maximum guaranteeable benefit for plans terminating in 1992, the year of the proposed termination date, is $2,352.27 per month, payable in the form of a single life annuity at age 65. Because the participant is older than age 65, no adjustment is required under § 4022.23(c) based on the annuitant's age factor. The benefit form is a joint and survivor annuity (contingent basis), as defined in § 4022.23(d)(2). The required benefit reduction for this benefit form under § 4022.23(d) is 10 percent. The corresponding adjustment factor is 0.90 (1.00–0.10). The benefit reduction factor to adjust for the age difference between the participant and the beneficiary is computed under § 4022.23(e). In computing the difference in ages, years over 65 years of age are not taken into account. Therefore, the age difference is 9 years (65–56). The required percentage reduction when the beneficiary is 9 years younger than the participant is 9 percent. The corresponding adjustment factor is 0.91 (1.00–0.09).

The maximum guaranteeable benefit adjusted for age and benefit form is $1,926.51 ($2,352.27×0.90×0.91) per month. Therefore, the plan administrator must reduce the participant's benefit payment from $2,500 to $1,926.51. If the participant dies after December 31, 1992, the plan administrator will pay his spouse $963.26 (0.50×$1,926.51) per month.

Example 2. Facts. The benefit of a participant who retired under a plan at age 60 is a reduced single life annuity of $400 per month plus a temporary supplement of $400 per month payable until age 62 (*i.e.*, a step-down

benefit). The participant's accrued benefit under the plan is $450 per month, payable from the plan's normal retirement age. On the proposed termination date, June 30, 1992, the participant is 61 years old.

The maximum guaranteeable benefit adjusted for age under § 4022.23(c) of this chapter is $1,693.63 ($2,352.27 × 0.72) per month. Since the benefit is payable as a single life annuity, no adjustment is required under § 4022.23(d) for benefit form.

Benefit reductions. The plan benefit of $800 per month payable until age 62 exceeds the participant's accrued benefit at normal requirement age of $450 per month. Paragraph (b) of this section requires that, except to the extent permitted by paragraph (d), the plan benefit must be reduced to $450 per month. Since the levelized benefit of $404.10 ((0.082 × 50) + $400) per month, determined under § 4022.23(f), is less than the adjusted maximum guaranteeable benefit of $1,693.63 per month, no further reduction in the $450 per month benefit payment is required under paragraph (c) of this section. The plan administrator next would determine the amount of the participant's estimated benefit under paragraph (d).

Example 3. Facts. A retired participant is receiving a reduced early retirement benefit of $1,100 per month plus a temporary supplement of $700 per month payable until age 62. The benefit is in the form of a single life annuity. On the proposed termination date, November 30, 1992, the participant is 56 years old.

The participant's accrued benefit at normal retirement age under the plan is $1,200 per month. The maximum guaranteeable benefit adjusted for age is $1,152.61 ($2,352.27 × 0.49) per month. A form adjustment is not required.

Benefit reductions. The plan benefit of $1,800 per month payable from age 56 to age 62 exceeds the participant's accrued benefit at normal retirement age of $1,200 per month. Therefore, under paragraph (b) of this section, the plan administrator must reduce the temporary supplement to $100 per month.

For the purpose of determining whether the reduced benefit, *i.e.*, a level-life annuity of $1,100 per month and a temporary annuity supplement of $100 per month to age 62, exceeds the maximum guaranteeable benefit adjusted for age, the temporary annuity supplement of $100 per month is converted to a level-life annuity equivalent in accordance with § 4022.23(f) of this chapter. The level-life annuity equivalent is $38.70 ($100 × 0.387). This, added to the life annuity of $1,100 per month, equals $1,138.70. Since the maximum guaranteeable benefit of $1,152.61 per month exceeds $1,138.70 per month, no further reduction is required under paragraph (c) of this section.

The plan administrator next would determine the participant's estimated benefit under paragraph (d). Assume that the estimated benefit under paragraph (d) is $780 per month until age 62 and $715 per month thereafter. The plan administrator would pay the participant $780 per month, reduced to $715 per month at age 62, subject to the final benefit determination made under title IV.

Example 4. Facts. A retired participant is receiving a reduced early retirement benefit of $2,650 per month plus a temporary supplement of $800 per month payable until age 62. The benefit is in the form of a joint and survivor annuity (contingent basis) that will pay 50 percent of the participant's benefit amount to his surviving spouse following the death of the participant. On the proposed termination date, December 20, 1992, the participant and his spouse are each 56 years old.

The participant's accrued benefit at normal retirement age under the plan is $3,000 per month. The maximum guaranteeable benefit adjusted for age and the joint and survivor annuity (contingent basis) annuity form is $1,037.35 per month. An adjustment for age difference is not required because the participant and his spouse are the same age.

Benefit reductions. The plan benefit of $3,450 per month payable from age 56 to age 62 exceeds the participant's accrued benefit at normal retirement age, which is $3,000 per month. Therefore, under paragraph (b) of this section, the plan administrator must reduce the participant's benefit so that it does not exceed $3,000 per month.

The level-life equivalent of the participant's reduced benefit, determined using the § 4022.23(f) adjustment factor, is $2,785.45 (($350 × 0.387) + $2,650) per month. Since this benefit exceeds the participant's maximum guaranteeable benefit of $1,037.35 per month, the plan administrator must reduce the participant's benefit payment so that it does not exceed the maximum guaranteeable benefit.

The ratio of (i) the participant's maximum guaranteeable benefit to (ii) the level-life equivalent of the participant's reduced benefit (computed under the ''accrued for normal retirement age'' limitation) is used in converting the level-life maximum guaranteeable benefit to the step-down benefit form. The level-life equivalent of the reduced benefit computed under the ''accrued for normal retirement age'' limitation is 37.24 percent ($1,037.35/$2,785.45). Thus, the plan administrator must reduce the participant's level-life benefit of $2,650 per month to $986.86 ($2,650 × 0.3724) and must further reduce the reduced temporary benefit of $350 per month to $130.34 ($350 × 0.3724). Under paragraph (c) of this section, therefore, the participant's maximum guaranteeable benefit is $1,117.20 ($986.86 + $130.34) per month to age 62 and $986.86 per month thereafter, subject to any adjustment under paragraph (d) of this section.

Assume that the estimated benefit under paragraph (d) is $1,005.48 per month to age 62 and $888.17 per month thereafter. The plan administrator would reduce the participant's benefit from $3,450 per month to $1,005.48 per month and pay this amount until age 62, at which time the benefit payment would be reduced to $888.17 per month, subject to the final benefit determination made under title IV.

[61 FR 34028, July 1, 1996, as amended at 62 FR 60428, Nov. 7, 1997; 76 FR 34604, June 14, 2011]

§ 4022.62 Estimated guaranteed benefit.

(a) *General*. The estimated guaranteed benefit payable with respect to each participant who is not a substantial owner is computed under paragraph (c) of this section. The estimated guaranteed benefit payable with respect to each participant who is a substantial owner is computed under paragraph (d) of this section.

(b) *Rules for determining benefits*. For the purposes of determining entitlement to a benefit and the amount of the estimated benefit under this section, the following rules apply:

(1) *Non-PPA 2006 bankruptcy termination*. In a non-PPA 2006 bankruptcy termination:

(i) For benefits payable with respect to a participant who is in pay status on or before the proposed termination date, the plan administrator shall use the participant's age and benefit payable under the plan as of the proposed termination date.

(ii) For benefits payable with respect to a participant who enters pay status after the proposed termination date, the plan administrator shall use the participant's age as of the benefit commencement date and his service and compensation as of the proposed termination date.

(2) *PPA 2006 bankruptcy termination*. In a PPA 2006 bankruptcy termination:

(i) For benefits payable with respect to a participant who is in pay status on or before the bankruptcy filing date, the plan administrator shall use the participant's age and benefit payable under the plan as of the bankruptcy filing date.

(ii) For benefits payable with respect to a participant who enters pay status after the bankruptcy filing date, the plan administrator shall use the participant's age as of the benefit commencement date and his service and compensation as of the bankruptcy filing date.

(3) *Participants with new benefits or benefit improvements*. For the purpose of determining the estimated guaranteed benefit under paragraph (c) of this section, only new benefits and benefit improvements that affect the benefit of the participant or beneficiary for whom the determination is made are taken into account.

(4) *Limitations on estimated guaranteed benefits*. For the purpose of determining the estimated guaranteed benefit under paragraph (c) or (d) of this section, the benefit determined under paragraph (b)(1) or (b)(2) of this section is subject to the limitations set forth in § 4022.61 (b) and (c).

(5) Nothing in this paragraph (b) overrides the provisions of subparts A and B of part 4022 with respect to the requirements necessary for a benefit to be guaranteed by PBGC.

(c) *Estimated guaranteed benefit payable with respect to a participant who is not a substantial owner*. For benefits payable with respect to a participant who is not a substantial owner, the estimated guaranteed benefit is determined under paragraph (c)(1) of this section, if no portion of the benefit is subject to the phase-in of plan termination insurance guarantees set forth in section 4022(b)(1) of ERISA. In any other case, the estimated guaranteed benefit is determined under paragraph (c)(2). ''Benefit subject to phase-in'' means a benefit that is subject to the phase-in of plan termination insurance guarantees set forth in section 4022(b)(1) of ERISA, determined without regard to section 4022(b)(7) of ERISA.

(1) *Participants with no benefits subject to phase-in*. In the case of a participant or beneficiary with no benefit improvement (as defined in paragraph (c)(2)(ii)) or new benefit (as defined in paragraph (c)(2)(i)) in the five years preceding the proposed termination date, the estimated guaranteed benefit is the benefit to which he or she is entitled under the rules in paragraph (b) of this section.

(2) *Participants with benefits subject to phase-in*. In the case of a participant or

beneficiary with a benefit improvement or new benefit in the five years preceding the proposed termination date, the estimated guaranteed benefit is the benefit to which he or she is entitled under the rules in paragraph (b) of this section, multiplied by the multiplier determined according to paragraphs (i), (ii), and (iii), but not less than the benefit to which he or she would have been entitled if the benefit improvement or new benefit had not been adopted.

(i) From column (a) of Table I, select the line that applies according to the number of full years before the proposed termination date since the plan was last amended to provide for a new benefit (or the number of full years since the plan was established, if it has never been amended to provide for a new benefit). ''New benefit'' means a change in the terms of the plan that results in (a) a participant's or a beneficiary's eligibility for a benefit that was not previously available or to which he or she was not entitled (excluding a benefit that is actuarially equivalent to the normal retirement benefit to which the participant was previously entitled) or (b) an increase of more than twenty percent in the benefit to which a participant is entitled upon entering pay status before his or her normal retirement age under the plan. ''New benefits'' result from liberalized participation or vesting requirements, reductions in the age or service requirements for receiving unreduced benefits, additions of actuarially subsidized benefits, and increases in actuarial subsidies. ''New benefits'' also result from increases that become payable by reason of the occurrence of an unpredictable contingent event (provided the event occurred after July 26, 2005), to the extent the increase would not be payable but for the occurrence of the event; in the case of such new benefits, the date of the occurrence of the unpredictable contingent event is treated as the amendment date for purposes of Table I. The establishment of a plan creates a new benefit as of the effective date of the plan. A change in the amount of a benefit is not deemed to be a ''new benefit'' if it results solely from a benefit improvement. ''New benefit'' and ''benefit improvement'' are mutually exclusive terms.

(ii) If there was no benefit improvement under the plan during the one-year period ending on the proposed termination date, use the multiplier set forth in column (b) of Table I on the line selected from column (a). ''Benefit improvement'' means a change in the terms of the plan that results in (a) an increase in the benefit to which a participant is entitled at his or her normal retirement age under the plan or (b) an increase in the benefit to which a participant or beneficiary in pay status is entitled.

(iii) If there was any benefit improvement during the one-year period ending on the proposed termination date, use the multiplier set forth in column (c) of Table I on the line selected from column (a).

TABLE I—APPLICABLE MULTIPLIER IF—

Full years since last new benefit (a)	No benefit improvement during last year (b)	Benefit improvement during last year (c)
Five or more	.90	.80
Four	.80	.70
Three	.65	.55
Two	.50	.45
Fewer than two	.35	.30

NOTE: The foregoing method of estimating guaranteed benefits is based upon the PBGC's experience with a wide range of plans and may not provide accurate estimates in certain circumstances. In accordance with § 4022.61(e), a plan administrator may use a different method of estimation if he or she demonstrates to the PBGC that his proposed method will be more equitable to participants and beneficiaries. The PBGC may require the use of a different method in certain cases.

(d) *Estimated guaranteed benefit payable with respect to a substantial owner.* For benefits payable with respect to each participant who is a substantial owner and who commenced participation under the plan fewer than five full years before the proposed termination date, the estimated guaranteed benefit is determined under paragraph (d)(1). With respect to any other substantial owner, the estimated guaranteed benefit is determined under paragraph (d)(2).

(1) *Fewer than five years of participation.* The estimated guaranteed benefit under this paragraph is the benefit to which the substantial owner is entitled, as determined under paragraph (b) of this section, multiplied by a fraction, not to exceed one, the numerator

of which is the number of full years prior to the proposed termination date that the substantial owner was an active participant under the plan and the denominator of which is thirty.

(2) *Five or more years of participation.* The estimated guaranteed benefit under this paragraph is the lesser of—

(i) The estimated guaranteed benefit calculated under paragraph (d)(1) of this section; or

(ii) The benefit to which the substantial owner would have been entitled as of the proposed termination date (or benefit commencement date in the case of a substantial owner whose benefit commences after the proposed termination date) under the terms of the plan in effect when he or she first began participation, as limited by § 4022.61 (b) and (c), multiplied by a fraction, not to exceed one, the numerator of which is two times the number of full years of his or her active participation under the plan prior to the proposed termination date and the denominator of which is thirty.

(e) *PPA 2006 bankruptcy termination.* In a PPA 2006 bankruptcy termination, ''bankruptcy filing date'' is substituted for ''proposed termination date'' each place that ''proposed termination date'' appears in paragraph (c) of this section.

(f) * * * (For an example addressing issues specific to a PPA 2006 bankruptcy termination, see § 4022.25(f).).

(f) *Examples.* This section is illustrated by the following examples. (For an example addressing issues specific to a PPA 2006 bankruptcy termination, see § 4022.25(f).).

Example 1. Facts. A participant who is not a substantial owner retired on December 31, 1991, at age 60 and began receiving a benefit of $600 per month. On January 1, 1989, the plan had been amended to allow participants to retire with unreduced benefits at age 60. Previously, a participant who retired before age 65 was subject to a reduction of 1/15 for each year by which his or her actual retirement age preceded age 65. On January 1, 1992, the plan's benefit formula was amended to increase benefits for participants who retired before January 1, 1992. As a result, the participant's benefit was increased to $750 per month. There have been no other pertinent amendments. The proposed termination date is December 15, 1992.

Estimated guaranteed benefit. No reduction is required under § 4022.61 (b) or (c) because the participant's benefit does not exceed either the participant's accrued benefit at normal retirement age or the maximum guaranteeable benefit. (Post-retirement benefit increases are not considered as increasing accrued benefits payable at normal retirement age.)

The amendment as of January 1, 1989, resulted in a ''new benefit'' because the reduction in the age at which the participant could receive unreduced benefits increased the participant's benefit entitlement at actual retirement age by 5/15, which is more than a 20 percent increase. The amendment of January 1, 1992, which increased the participant's benefit to $750 per month, is a ''benefit improvement'' because it is an increase in the amount of benefit for persons in pay status. (No percentage test applies in determining whether such an increase is a benefit improvement.)

The multiplier for computing the amount of the estimated guaranteed benefit is taken from the third row of Table I (because the last new benefit had been in effect for 3 full years as of the proposed termination date) and column (c) (because there was a benefit improvement within the 1-year period preceding the proposed termination date). This multiplier is 0.55. Therefore, the amount of the participant's estimated guaranteed benefit is $412.50 (0.55×$750) per month.

Example 2. Facts. A participant who is not a substantial owner terminated employment on December 31, 1990. On January 1, 1992, she reached age 65 and began receiving a benefit or $250 per month. She had completed 3 years of service at her termination of employment and was fully vested in her accrued benefit. The plan's vesting schedule had been amended on July 1, 1988. Under the schedule in effect before the amendment, a participant with 5 years of service was 100 percent vested. There have been no other pertinent amendments. The proposed termination date is December 31, 1992.

Estimated guaranteed benefit. No reduction is required under § 4022.61 (b) or (c) because the participant's benefit does not exceed either her accrued benefit at normal retirement age or the maximum guaranteeable benefit. The plan's change of vesting schedule created a new benefit for the participant. Because the amendment was in effect for 4 full years before the proposed termination date, the second row of Table I is used to determine the applicable multiplier for estimating the amount of the participant's guaranteed benefit. Because the participant did not receive any benefit improvement during the 12-month period ending on the proposed termination date, column (b) of the table is used. Therefore, the multiplier is 0.80, and the amount of the participant's estimated guaranteed benefit is $200 (0.80×$250) per month.

Example 3. Facts. A participant who is a substantial owner retired prior to the proposed termination date after 5½ years of active participation in the plan. The benefit under the terms of the plan when he first began active participation was $800 per month. On the proposed termination date of April 30, 1992, he was entitled to receive a benefit of $2,000 per month. No reduction of this benefit is required under § 4022.61 (b) or (c).

Estimated guaranteed benefit. Paragraph (d)(2) of this section is used to compute the amount of the estimated guaranteed benefit of substantial owners with 5 or more years of active participation prior to the proposed termination date. Consequently, the amount of this participant's estimated guaranteed benefit is the lesser of—

(i) The amount calculated as if he had been an active participant in the plan for fewer than 5 full years on the proposed termination date, or $333.33 ($2,000×5/30) per month, or

(ii) The amount to which he would have been entitled as of the proposed termination date under the terms of the plan when he first began participation, as limited by § 4022.61 (b) and (c), multiplied by 2 times the number of years of active participation and divided by 30, or $266.67 ($800×2 ×5/30) per month. Therefore, the amount of the participant's estimated guaranteed benefit is $266.67 per month.

[61 FR 34028, July 1, 1996; 61 FR 36626, July 12, 1996; 76 FR 34604, June 14, 2011; 79 FR 25674, May 6, 2014]

§ 4022.63 Estimated title IV benefit.

(a) *General.* If the conditions specified in paragraph (b) exist, the plan administrator shall determine each participant's estimated title IV benefit. The estimated title IV benefit payable with respect to each participant who is not a substantial owner is computed under paragraph (c) of this section. The estimated title IV benefit payable with respect to each participant who is a substantial owner is computed under paragraph (d) of this section.

(b) *Conditions for use of this section.* The conditions set forth in this paragraph must be satisfied in order to make use of the procedures set forth in this section. If the specified conditions exist, estimated title IV benefits must be determined in accordance with these procedures (or in accordance with alternative procedures authorized by the PBGC under § 4022.61(f)) for each participant and beneficiary whose benefit under the plan exceeds the limitations contained in § 4022.61(b) or (c) or who is a substantial owner or the beneficiary of a substantial owner. If the specified conditions do not exist, title IV benefits may be estimated by the plan administrator in accordance with procedures authorized by the PBGC, but no such estimate is required. The conditions are as follows:

(1) An actuarial valuation of the plan has been performed for a plan year beginning not more than eighteen months before the proposed termination date. If the interest rate used to value plan liabilities in this valuation exceeded the applicable valuation interest rates and factors under appendix B to part 4044 of this chapter in effect on the proposed termination date, the value of benefits in pay status and the value of vested benefits not in pay status on the valuation date must be converted to the PBGC's valuation rates and factors.

(2) The plan has been in effect for at least five full years before the proposed termination date, and the most recent actuarial valuation demonstrates that the value of plan assets, reduced by employee contributions remaining in the plan and interest credited thereon under the terms of the plan, exceeds the present value, adjusted as required under paragraph (b)(1), of all plan benefits in pay status on the valuation date.

(3) *PPA 2006 bankruptcy termination.* In a PPA 2006 bankruptcy termination, ''bankruptcy filing date'' is substituted for ''proposed termination date'' in the first sentence of paragraph (b)(2) of this section.

(c)(1)*In general.—Estimated title IV benefit payable with respect to a participant who is not a substantial owner.* For benefits payable with respect to a participant who is not a substantial owner, the estimated title IV benefit is the estimated priority category 3 benefit computed under this paragraph. Priority category 3 benefits are payable with respect to participants who were, or could have been, in pay status three full years prior to the proposed termination date. The estimated priority category 3 benefit is computed by multiplying the benefit payable with respect to the participant under

§ 4022.62 (b)(1) and (b)(2) by a fraction, not to exceed one—

(1)(i) The numerator of which is the benefit that would be payable with respect to the participant at normal retirement age under the provisions of the plan in effect on the date five full years before the proposed termination date, based on the participant's age, service, and compensation as of the earlier of the participant's benefit commencement date or the proposed termination date, and

(ii) The denominator of which is the benefit that would be payable with respect to the participant at normal retirement age under the provisions of the plan in effect on the proposed termination date, based on the participant's age, service, and compensation as of the earlier of the participant's benefit commencement date or the proposed termination date.

(2) *PPA 2006 bankruptcy termination.* In a PPA 2006 bankruptcy termination, ''bankruptcy filing date'' is substituted for ''proposed termination date'' each place that ''proposed termination date'' appears in paragraph (c)(1) of this section.

(d) *Estimated title IV benefit payable with respect to a substantial owner.* For benefits payable with respect to a participant who is a substantial owner, the estimated title IV benefit is the higher of the benefit computed under paragraph (c) of this section or the benefit computed under this paragraph.

(1) The plan administrator shall first calculate the estimated guaranteed benefit payable with respect to the substantial owner as if he or she were not a substantial owner, using the method set forth in § 4022.62(c).

(2) The benefit computed under paragraph (d)(1) shall be multiplied by the priority category 4 funding ratio. The category 4 funding ratio is the ratio of x to y, not to exceed one, where—

(i) In a plan with priority category 3 benefits, x equals plan assets minus employee contributions remaining in the plan on the valuation date, with interest credited thereon under the terms of the plan, and the present value of benefits in pay status, and y equals the present value of all vested benefits not in pay status minus such employee contributions and interest; or

(ii) In a plan with no priority category 3 benefits, x equals plan assets minus employee contributions remaining in the plan on the valuation date, with interest credited thereon under the terms of the plan, and y equals the present value of all vested benefits minus such employee contributions and interest.

(e) *Examples.* This section is illustrated by the following examples:

Example 1. Facts. A participant who is not a substantial owner was eligible to retire 3½ years before the proposed termination date. The participant retired 2 years before the proposed termination date with 20 years of service. Her final 5 years' average salary was $45,000, and she was entitled to an unreduced early retirement benefit of $1,500 per month payable as a single life annuity. This retirement benefit does not exceed the limitation in § 4022.61 (b) or (c).

On the participant's benefit commencement date, the plan provided for a normal retirement benefit of 2 percent of the final 5 years' salary times the number of years of service. Five years before the proposed termination date, the percentage was 1½ percent. The amendments improving benefits were put into effect 3½ years prior to the proposed termination date. There were no other amendments during the 5-year period.

The participant's estimated guaranteed benefit computed under § 4022.62(c) is $1,500 per month times 0.90 (the factor from column (b) of Table I in § 4022.62(c)(2)), or $1,350 per month. It is assumed that the plan meets the conditions set forth in paragraph (b) of this section, and the plan administrator is therefore required to estimate the title IV benefit.

Estimated title IV benefit. For a participant who is not a substantial owner, the amount of the estimated title IV benefit is the estimated priority category 3 benefit computed under paragraph (c) of this section. This amount is computed by multiplying the participant's benefit under the plan as of the later of the proposed termination date or the benefit commencement date by the ratio of (i) the normal retirement benefit under the provisions of the plan in effect 5 years before the proposed termination date and (ii) the normal retirement benefit under the plan provisions in effect on the proposed termination date.

Thus, the numerator of the ratio is the benefit that would be payable to the participant under the normal retirement provisions of the plan 5 years before the proposed termination date, based on her age, service, and compensation on her benefit commencement date. The denominator of the ratio is the benefit that would be payable to the participant under the normal retirement provisions

of the plan in effect on the proposed termination date, based on her age, service, and compensation as of the earlier of her benefit commencement date or the proposed termination date. Since the only different factor in the numerator and denominator is the salary percentage, the amount of the estimated title IV benefit is $1,125 (0.015/0.020 × $1,500) per month. This amount is less than the estimated guaranteed benefit of $1,350 per month. Therefore, in accordance with § 4022.61(d), the benefit payable to the participant is $1,350 per month.

PPA 2006 bankruptcy termination. In a PPA 2006 bankruptcy termination, the methodology would be the same, but ''bankruptcy filing date'' would be substituted for ''proposed termination date'' each place that ''proposed termination date'' appears in the example, and the numbers would change accordingly.

Example 2. Facts. A participant who is a substantial owner retires at the plan's normal retirement age, having completed 5 years of active participation in the plan, on October 31, 1992, which is the proposed termination date. Under provisions of the plan in effect 5 years prior to the proposed termination date, the participant is entitled to a single life annuity of $500 per month. Under the most recent plan amendments, which were put into effect 1½ years prior to the proposed termination date, the participant is entitled to a single life annuity of $1,000 per month. The participant's estimated guaranteed benefit computed under § 4022.62(d)(2) is $166.67 per month.

It is assumed that all of the conditions in paragraph (b) of this section have been met. Plan assets equal $2 million. The present value of all benefits in pay status is $1.5 million based on applicable PBGC interest rates. There are no employee contributions and the present value of all vested benefits that are not in pay status is $0.75 million based on applicable PBGC interest rates.

Estimated title IV benefit. Paragraph (d) of this section provides that the amount of the estimated title IV benefit payable with respect to a participant who is a substantial owner is the higher of the estimated priority category 3 benefit computed under paragraph (c) of this section or the estimated priority category 4 benefit computed under paragraph (d) of this section.

Under paragraph (c), the participant's estimated priority category 3 benefit is $500 ($1,000 × $500/$1,000) per month.

Under paragraph (d), the participant's estimated priority category 4 benefit is the estimated guaranteed benefit computed under § 4022.62(c) (*i.e.*, as if the participant were not a substantial owner) multiplied by the priority category 4 funding ratio. Since the plan has priority category 3 benefits, the ratio is determined under paragraph (d)(2)(i). The numerator of the ratio is plan assets minus the present value of benefits in pay status. The denominator of the ratio is the present value of all vested benefits that are not in pay status. The participant's estimated guaranteed benefit under § 4022.62(c) is $1,000 per month times 0.90 (the factor from column (b) of Table I in § 4022.62(c)(2)), or $900 per month. Multiplying $900 by the category 4 funding ratio of ⅔ (($2 million—$1.5 million)/$0.75 million) produces an estimated category 4 benefit of $600 per month.

Because the estimated category 4 benefit so computed is greater than the estimated category 3 benefit so computed, the estimated category 4 benefit is the estimated title IV benefit. Because the estimated category 4 benefit so computed is greater than the estimated guaranteed benefit of $166.67 per month, in accordance with § 4022.61(d), the benefit payable to the participant is the estimated category 4 benefit of $600 per month.

[61 FR 34028, July 1, 1996; 61 FR 36626, July 12, 1996; 76 FR 34604, June 14, 2011]

Subpart E—PBGC Recoupment and Reimbursement of Benefit Overpayments and Underpayments

§ 4022.81 General rules.

(a) *Recoupment of benefit overpayments.* If at any time the PBGC determines that net benefits paid with respect to any participant in a PBGC-trusteed plan exceed the total amount to which the participant (and any beneficiary) is entitled up to that time under title IV of ERISA, and the participant (or beneficiary) is, as of the termination date, entitled to receive future benefit payments, the PBGC will recoup the net overpayment in accordance with paragraph (c) of this section and § 4022.82. Notwithstanding the previous sentence, the PBGC may, in its discretion, recover overpayments by methods other than recouping in accordance with the rules in this subpart. The PBGC will not normally do so unless net benefits paid after the termination date exceed those to which a participant (and any beneficiary) is entitled under the terms of the plan before any reductions under subpart D.

(b) *Reimbursement of benefit underpayments.* If at any time the PBGC determines that net benefits paid with respect to a participant in a PBGC-

trusteed plan are less than the amount to which the participant (and any beneficiary) is entitled up to that time under title IV of ERISA, the PBGC will reimburse the participant or beneficiary for the net underpayment in accordance with paragraph (c) of this section and §4022.83.

(c) *Amount to be recouped or reimbursed.* In order to determine the amount to be recouped from, or reimbursed to, a participant (or beneficiary), the PBGC will calculate a monthly account balance for each month ending after the termination date. The PBGC will start with a balance of zero as of the end of the calendar month ending immediately prior to the termination date and determine the account balance as of the end of each month thereafter as follows:

(1) *Debit for overpayments.* The PBGC will subtract from the account balance the amount of overpayments made in that month. Only overpayments made on or after the latest of the proposed termination date, the termination date, or, if no notice of intent to terminate was issued, the date on which proceedings to terminate the plan are instituted pursuant to section 4042 of ERISA will be included.

(2) *Credit for underpayments.* The PBGC will add to the account balance the amount of underpayments made in that month. Only underpayments made on or after the termination date will be included.

(3) *PPA 2006 bankruptcy termination.* The provisions of paragraphs (c)(1) and (2) of this section regarding the overpayments and underpayments that will be included in the account balance apply regardless of whether the termination is a PPA 2006 bankruptcy termination.

(4) *Credit for interest on net underpayments.* If at the end of a month there is a positive account balance (a net underpayment), the PBGC will add to the account balance interest thereon for that month using—

(i) For months after May 1998, the applicable federal mid-term rate (as determined by the Secretary of the Treasury pursuant to section 1274(d)(1)(C)(ii) of the Code) for that month (or, where the rate for a month is not available at the time the PBGC calculates the amount to be recouped or reimbursed, the most recent month for which the rate is available) based on monthly compounding; and

(ii) For May 1998 and earlier months, the immediate annuity rate established for lump sum valuations as set forth in Table II of Appendix B of part 4044 of this chapter.

(5) *No interest on net overpayments.* If at the end of a month, there is a negative account balance (a net overpayment), there will be no interest adjustment for that month.

(d) *Death of participant*—(1) *Benefit overpayments.* If the PBGC determines that, at the time of a participant's death, there was a net overpayment to the participant—

(i) *Future annuity payments.* If the participant was entitled to future annuity payments as of the plan's termination date, the PBGC will (except as provided in paragraph (a) of this section) recoup the overpayment from the person (if any) who is receiving survivor benefits under the annuity.

(ii) *No future annuity payments.* If the participant was not entitled to future annuity benefits as of the plan's termination date, the PBGC may seek repayment of the overpayment from the participant's estate.

(2) *Benefit underpayments.* If the PBGC determines that, at the time of a participant's death, there was a net underpayment to the participant—

(i) *Future annuity payments.* If the benefit is in the form of a joint-and-survivor or other annuity under which payments may continue after the participant's death, the PBGC will pay the underpayment to the person who is receiving survivor benefits; for this purpose, if the person receiving survivor benefits is an alternate payee under a qualified domestic relations order, the PBGC will treat the benefit as if payments do not continue after the participant's death (see paragraph (d)(2)(ii) of this section).

(ii) *No future annuity payments.* If the benefit is not in the form of a joint-and-survivor or other annuity (e.g., a certain-and-continuous annuity) under which payments may continue after the participant's death or although the benefit is in such a form payments do not continue after the participant's

death (*i.e.*, in the case of a joint-and-survivor annuity, the person designated to receive survivor benefits predeceased the participant or, in the case of another annuity under which payments may continue after the participant's death the participant died with no payments owed for future periods), the PBGC will pay the underpayment to the person determined under the rules in §§ 4022.91 through 4022.95.

[63 FR 29354, May 29, 1998, as amended at 67 FR 16956, Apr. 8, 2002; 76 FR 34604, June 14, 2011]

§ 4022.82 Method of recoupment.

(a) *Future benefit reduction*. The PBGC will recoup net overpayments of benefits by reducing the amount of each future benefit payment to which the participant or any beneficiary is entitled by the fraction determined under paragraphs (a)(1) and (a)(2) of this section, except that benefit reduction will cease when the amount (without interest) of the net overpayment is recouped. Notwithstanding the preceding sentence, the PBGC may accept repayment ahead of the recoupment schedule.

(1) *Computation*. The PBGC will determine the fractional multiplier by dividing the amount of the net overpayment by the present value of the benefit payable with respect to the participant under title IV of ERISA.

(i) *Non-PPA 2006 bankruptcy termination*. In a non-PPA bankruptcy termination, the PBGC will determine the present value of the benefit to which a participant or beneficiary is entitled under title IV of ERISA as of the termination date, using the PBGC interest rates and factors in effect on that date.

(ii) *PPA 2006 bankruptcy termination*. In a PPA 2006 bankruptcy termination, PBGC will determine the amount of benefit payable with respect to the participant under title IV of ERISA taking into account the limitations in sections 4022(g) and 4044(e) (and corresponding provisions of these regulations), and will determine the present value of that amount as of the termination date, using PBGC interest rates and factors in effect on the termination date.

(iii) *Facts and circumstances*. The PBGC may, however, utilize a different date of determination if warranted by the facts and circumstances of a particular case.

(2) *Limitation on benefit reduction*. Except as provided in paragraph (a)(1) of this section, the PBGC will reduce benefits with respect to a participant or beneficiary by no more than the greater of—

(i) Ten percent per month; or

(ii) The amount of benefit per month in excess of the maximum guaranteeable benefit payable under section 4022(b)(3)(B) of ERISA, determined without adjustment for age and benefit form.

(3) *PBGC notice to participant or beneficiary*. Before effecting a benefit reduction pursuant to this paragraph, the PBGC will notify the participant or beneficiary in writing of the amount of the net overpayment and of the amount of the reduced benefit computed under this section.

(4) *Waiver of de minimis amounts*. The PBGC may, in its discretion, decide not to recoup net overpayments that it determines to be *de minimis*.

(5) *Final installment*. The PBGC will cease recoupment one month early if the amount remaining to be recouped in the final month is less than the amount of the monthly reduction.

(b) *Full repayment through recoupment*. Recoupment under this section constitutes full repayment of the net overpayment.

[63 FR 29354, May 29, 1998, as amended at 76 FR 34604, June 14, 2011]

§ 4022.83 PBGC reimbursement of benefit underpayments.

When the PBGC determines that there has been a net benefit underpayment made with respect to a participant, it shall pay the participant or beneficiary the amount of the net underpayment, determined in accordance with § 4022.81(c), in a single payment.

[61 FR 34028, July 1, 1996, as amended at 63 FR 29355, May 29, 1998]

Subpart F—Certain Payments Owed Upon Death

SOURCE: 67 FR 16957, Apr. 8, 2002, unless otherwise noted.

§ 4022.91 When do these rules apply?

(a) *Types of benefits.* Provided the conditions in paragraphs (b) and (c) of this section are satisfied, these rules (§§ 4022.91 through 4022.95) apply to any benefits we may owe you (including benefits we owe you because your plan owed them) at the time of your death, such as a payment of a lump-sum benefit that we calculated as of your plan's termination date but have not yet paid you or a back payment to reimburse you for monthly underpayments. We may owe you benefits at the time of your death if—

(1) You are a participant in a terminated plan;

(2) You are a beneficiary (including an alternate payee) of a participant; or

(3) You are a designee or other payee (e.g., a participant's next of kin) under these rules, as explained in § 4022.93.

(b) *Payments do not continue after death.* These rules apply only if payments do not continue after your death. (If payments continue after your death, we will make up any underpayment to you at the time of your death under the rule in § 4022.81(d)(2)(i) by paying it to the person who is entitled to receive those continuing payments.) Payments do not continue after your death if—

(1) Your benefit is not in the form of a joint-and-survivor or other annuity under which payments may continue after your death (e.g., a certain-and-continuous annuity);

(2) Your benefit is in the form of a joint-and-survivor annuity and the person designated to receive survivor benefits died before you; or

(3) Your benefit is in the form of another type of annuity under which payments may continue after your death (e.g., a certain-and-continuous annuity) but you die with no payments owed for future periods.

(c) *Time of death.* These rules apply only if you die—

(1) On or after the date we take over your plan (as trustee); or

(2) Before the date we take over your plan, to the extent that, by that date, the plan administrator has not paid all benefits owed to you at the time of your death.

(d) *Effect of plan or will.* These rules apply even if there is a contrary provision in a plan or will.

§ 4022.92 What definitions do I need to know for these rules?

You need to know three definitions from § 4001.2 of this chapter (PBGC, person, and plan) and the following definitions:

''We'' means the PBGC.

''You'' means the person to whom we may owe benefits at the time of death.

§ 4022.93 Who will get benefits the PBGC may owe me at the time of my death?

(a) *In general.* Except as provided in paragraphs (b) and (c) of this section (which explain what happens if you die before the date we take over your plan or within 180 days after the date we take over your plan), we will pay any benefits we owe you at the time of your death to the person(s) surviving you in the following order—

(1) *Designee with the PBGC.* The person(s) you designated with us to get any benefits we may owe you at the time of your death. See § 4022.94 for information on designating with us.

(2) *Spouse.* Your spouse. We will consider a person to whom you are married to be your spouse even if you and that person are separated, unless a decree of divorce or annulment has been entered in a court.

(3) *Children.* Your children and descendants of your deceased children.

(i) *Adopted children.* In determining who is a child or descendant, an adopted child is treated the same way as a natural child.

(ii) *Child dies before parent.* If one of your children dies before you, any of your grandchildren through that deceased child will equally divide that deceased child's share; if one of your grandchildren through that deceased child dies before that deceased child, any of your great-grandchildren through that deceased grandchild will equally divide that deceased grandchild's share; and so on.

(4) *Parents.* Your parents. A parent includes an adoptive parent.

(5) *Estate.* Your estate, provided your estate is open.

(6) *Next of kin.* Your next of kin in accordance with applicable state law.

(b) *Pre-trusteeship deaths.* If you die before the date we take over your plan and, by that date, the plan administrator has not paid all benefits owed to you at the time of your death, we will pay any benefits we owe you at the time of your death to the person(s) designated by or under the plan to get those benefits (provided the designation clearly applies to those benefits). If there is no such designation, we will pay those benefits to your spouse, children, parents, estate, or next of kin under the rules in paragraphs (a) (2) through (a)(6) of this section.

(c) *Deaths shortly after trusteeship.* If you die within 180 days after the date we take over your plan and you have not designated anyone with the PBGC under paragraph (a)(1) of this section, we will pay any benefits we owe you at the time of your death to the person(s) designated by or under the plan to get those benefits (provided the designation clearly applies to those benefits) before paying those benefits to your spouse, children, parents, estate, or next of kin under the rules in paragraphs (a) (2) through (a)(6) of this section.

§ 4022.94 What are the PBGC's rules on designating a person to get benefits the PBGC may owe me at the time of my death?

(a) *When you may designate.* At any time on or after the date we take over your plan, you may designate with us who will get any benefits we owe you at the time of your death.

(b) *Change of designee.* If you want to change the person(s) you designate with us, you must submit another designation to us.

(c) *If your designee dies before you*—(1) *In general.* If the person(s) you designate with us dies before you or at the same time as you, we will treat you as not having designated anyone with us (unless you named an alternate designee who survives you). Therefore, you should keep your designation with us current.

(2) *Simultaneous deaths.* If you and a person you designated die as a result of the same event, we will treat you and that person as having died at the same time, provided you and that person die within 30 days of each other.

§ 4022.95 Examples.

The following examples show how the rules in §§ 4022.91 through 4022.94 apply. For examples on how these rules apply in the case of a certain-and-continuous annuity, see § 4022.104.

At the time of his death, Charlie was receiving payments under a joint-and-survivor annuity. Charlie designated Ellen to receive survivor benefits under his joint-and-survivor annuity. We underpaid Charlie for periods before his death. At the time of his death, we owed Charlie a back payment to reimburse him for those underpayments.

(a) *Example 1: where surviving beneficiary is alive at participant's death.* Ellen survived Charlie. As explained in § 4022.91(b), because Ellen is entitled to survivor benefits under the joint-and-survivor annuity, we would pay Ellen the back payment.

(b) *Example 2: where surviving beneficiary predeceases participant.* Ellen died before Charlie. As explained in §§ 4022.91(b) and 4022.93, because benefits do not continue after Charlie's death under the joint-and-survivor annuity, we would pay the back payment to the person(s) Charlie designated to receive any payments we might owe him at the time of his death. If Charlie did not designate anyone to receive those payments or his designee died before him, we would pay the back payment to the person(s) surviving Charlie in the following order: spouse, children, parents, estate and next of kin.

Subpart G—Certain-and-Continuous and Similar Annuity Payments Owed for Future Periods After Death

SOURCE: 67 FR 16958, Apr. 8, 2002, unless otherwise noted.

§ 4022.101 When do these rules apply?

(a) *In general.* These rules (§§ 4022.101 through 4022.104) apply only if you die—

(1) *Required payments for future periods*. Without having received all required payments for future periods under a form of annuity promising that, regardless of a participant's death, there will be annuity payments for a certain period of time (e.g., a certain-and-continuous annuity) or until a certain amount is paid (e.g., a cash-refund annuity or installment-refund annuity);

(2) *No surviving beneficiary*. Without a surviving beneficiary designated to receive the payments described in paragraph (a)(1) of this section; and

(3) *Time of death*. (i) On or after the date we take over your plan (as trustee); or

(ii) Before the date we take over your plan, to the extent that, by that date, the plan administrator has not paid any required payments for future periods.

(b) *Effect of plan or will*. These rules apply even if there is a contrary provision in a plan or will.

(c) *Payments owed at time of death*. See §§ 4022.91 through 4022.95 for rules that apply to benefits we may owe you at the time of your death, such as a correction for monthly underpayments.

§ 4022.102 What definitions do I need to know for these rules?

You need to know three definitions from § 4001.2 of this chapter (PBGC, person, and plan) and the following definitions:

''We'' means the PBGC.

''You'' means the person who might die—

(1) Without having received all required payments for future periods under a form of annuity promising that, regardless of a participant's death, there will be annuity payments for a certain period of time (e.g., a certain-and-continuous annuity) or until a certain amount is paid (e.g., a cash-refund annuity or installment-refund annuity); and

(2) Without a surviving beneficiary designated to receive the payments described in paragraph (1) of this definition.

§ 4022.103 Who will get benefits if I die when payments for future periods under a certain-and-continuous or similar annuity are owed upon my death?

If you die at a time when payments are owed for future periods under a form of annuity promising that, regardless of a participant's death, there will be annuity payments for a certain period of time (e.g., a certain-and-continuous annuity) or until a certain amount is paid (e.g., a cash-refund annuity or installment-refund annuity), and there is no surviving beneficiary designated to receive such payments, we will pay the remaining payments to the person determined under the rules in § 4022.93.

§ 4022.104 Examples.

The following examples show how the rules in §§ 4022.101 through 4022.103 and 4022.91 through 4022.94 apply in the case of a certain-and-continuous annuity.

(a) *C&C annuity with no underpayment*. At the time of his death, Charlie was receiving payments (in the correct amount) under a 5-year certain-and-continuous annuity. Charlie designated Ellen to receive any payments we might owe for periods after his death (but did not designate an alternate beneficiary to receive those payments in case Ellen died before him). Charlie died with three years of payments remaining.

(1) *Example 1: where surviving beneficiary predeceases participant*. Ellen died before Charlie. As explained in §§ 4022.103 and 4022.93, we would pay the remaining three years of payments to the person(s) surviving Charlie in the following order: spouse, children, parents, estate and next of kin.

(2) *Example 2: where surviving beneficiary dies during certain period*. Ellen survived Charlie and lived another year. We pay Ellen one year of payments. As explained in §§ 4022.103 and 4022.93, we would pay the remaining two years of payments to the person Ellen designated to receive any payments we might owe for periods after Ellen's death. If Ellen did not designate anyone to receive those payments or her designee died before her, we would pay the remaining year of payments to the person(s) surviving Ellen in the following order: spouse, children, parents, estate, next of kin.

(b) *C&C annuity with underpayment*. At the time of his death, Charlie was receiving payments under a 5-year certain-and-continuous annuity. Charlie designated Ellen to receive any payments we might owe for periods after his death. We underpaid Charlie for periods before his death. At the time of his death, we

owed Charlie a back payment to reimburse him for those underpayments.

(1) *Example 3: where participant dies during certain period.* Charlie died with three years of payments remaining. Ellen survived Charlie and lived at least another three years. We pay Ellen the remaining three years of payments. As explained in §4022.91(b), because Ellen is entitled to survivor benefits under the certain-and-continuous annuity, we would pay Ellen the back payment for the underpayments to Charlie (and for any underpayments to Ellen).

(2) *Example 4: where participant and surviving beneficiary die during certain period.* Charlie died with three years of payments remaining. Ellen survived Charlie and lived another year. We paid Ellen one year of payments. Ellen designated Jean to receive any payments we might owe for periods after Ellen's death. Jean survived Ellen and lives at least another two years. We pay Jean the remaining two years of payments. As explained in §4022.91(b), because Jean is entitled to survivor benefits under the certain-and-continuous annuity, we would pay Jean the back payment for the underpayments to Charlie (and for any underpayments to Ellen).

(3) *Example 5: where participant dies after certain period.* Charlie died after receiving seven years of payments. As explained in §§4022.91(b) and 4022.93, because benefits do not continue after Charlie's death under the certain-and-continuous annuity, we would pay the back payment to the person(s) Charlie designated to receive any payments we might owe him at the time of his death in case he died after the end of certain period. If Charlie did not designate anyone to receive those payments or his designee died before him, we would pay the back payment to the person(s) surviving Charlie in the following order: spouse, children, parents, estate and next of kin.

APPENDIX A TO PART 4022—LUMP SUM MORTALITY RATES

Age x	q_x
12	0.000000
13	0.000000
14	0.000000
15	0.000000
16	0.001437
17	0.001414
18	0.001385
19	0.001351
20	0.001311
21	0.001267
22	0.001219
23	0.001167
24	0.001149
25	0.001129
26	0.001107
27	0.001083
28	0.001058
29	0.001083
30	0.001111
31	0.001141
32	0.001173
33	0.001208
34	0.001297
35	0.001398
36	0.001513
37	0.001643
38	0.001792
39	0.001948
40	0.002125
41	0.002327
42	0.002556
43	0.002818
44	0.003095
45	0.003410
46	0.003769
47	0.004180
48	0.004635
49	0.005103
50	0.005616
51	0.006196
52	0.006853
53	0.007543
54	0.008278
55	0.009033
56	0.009875
57	0.010814
58	0.011863
59	0.012952
60	0.014162
61	0.015509
62	0.017010
63	0.018685
64	0.020517
65	0.022562
66	0.024847
67	0.027232
68	0.029634
69	0.032073
70	0.034743
71	0.037667
72	0.040871
73	0.044504
74	0.048504
75	0.052913
76	0.057775
77	0.063142
78	0.068628
79	0.074648
80	0.081256
81	0.088518
82	0.096218
83	0.104310
84	0.112816
85	0.122079
86	0.132174
87	0.143179
88	0.155147
89	0.168208
90	0.182461
91	0.198030
92	0.215035
93	0.232983
94	0.252545
95	0.273878
96	0.297152
97	0.322553
98	0.349505
99	0.378865
100	0.410875
101	0.445768
102	0.483830
103	0.524301

Age x	q_x
104	0.568365
105	0.616382
106	0.668696
107	0.725745
108	0.786495
109	0.852659
110	0.924666
111	1.000000

[61 FR 34059, July 1, 1996; 61 FR 36626, July 12, 1996. Redesignated at 65 FR 14753, Mar. 17, 2000]

APPENDIX B TO PART 4022—LUMP SUM INTEREST RATES FOR PBGC PAYMENTS

[In using this table: (1) For benefits for which the participant or beneficiary is entitled to be in pay status on the valuation date, the immediate annuity rate shall apply; (2) For benefits for which the deferral period is y years (where y is an integer and $0 < y \leq n_1$), interest rate i_1 shall apply from the valuation date for a period of y years; thereafter the immediate annuity rate shall apply; (3) For benefits for which the deferral period is y years (where y is an integer and $n_1 < y \leq n_1 + n_2$); interest rate i_2 shall apply from the valuation date for a period of $y - n_1$ years, interest rate i_1 shall apply for the following n_1 years; thereafter the immediate annuity rate shall apply; (4) For benefits for which the deferral period is y years (where y is an integer and $y > n_1 + n_2$), interest rate i_3 shall apply from the valuation date for a period of $y - n_1 - n_2$ years; interest rate i_2 shall apply for the following n_2 years; interest rate i_1 shall apply for the following n_1 years; thereafter the immediate annuity rate shall apply.]

Rate set	For plans with a valuation date		Immediate annuity rate (percent)	Deferred annuities (percent)				
	On or after	Before		i_1	i_2	i_3	n_1	n_2
1	11–1–93	12–1–93	4.25	4.00	4.00	4.00	7	8
2	12–1–93	1–1–94	4.25	4.00	4.00	4.00	7	8
3	1–1–94	2–1–94	4.50	4.00	4.00	4.00	7	8
4	2–1–94	3–1–94	4.50	4.00	4.00	4.00	7	8
5	3–1–94	4–1–94	4.50	4.00	4.00	4.00	7	8
6	4–1–94	5–1–94	4.75	4.00	4.00	4.00	7	8
7	5–1–94	6–1–94	5.25	4.50	4.00	4.00	7	8
8	6–1–94	7–1–94	5.25	4.50	4.00	4.00	7	8
9	7–1–94	8–1–94	5.50	4.75	4.00	4.00	7	8
10	8–1–94	9–1–94	5.75	5.00	4.00	4.00	7	8
11	9–1–94	10–1–94	5.50	4.75	4.00	4.00	7	8
12	10–1–94	11–1–94	5.50	4.75	4.00	4.00	7	8
13	11–1–94	12–1–94	6.00	5.25	4.00	4.00	7	8
14	12–1–94	1–1–95	6.25	5.50	4.25	4.00	7	8
15	1–1–95	2–1–95	6.00	5.25	4.00	4.00	7	8
16	2–1–95	3–1–95	6.00	5.25	4.00	4.00	7	8
17	3–1–95	4–1–95	6.00	5.25	4.00	4.00	7	8
18	4–1–95	5–1–95	5.75	5.00	4.00	4.00	7	8
19	5–1–95	6–1–95	5.50	4.75	4.00	4.00	7	8
20	6–1–95	7–1–95	5.50	4.75	4.00	4.00	7	8
21	7–1–95	8–1–95	4.75	4.00	4.00	4.00	7	8
22	8–1–95	9–1–95	4.75	4.00	4.00	4.00	7	8
23	9–1–95	10–1–95	5.00	4.25	4.00	4.00	7	8
24	10–1–95	11–1–95	4.75	4.00	4.00	4.00	7	8
25	11–1–95	12–1–95	4.75	4.00	4.00	4.00	7	8
26	12–1–95	1–1–96	4.50	4.00	4.00	4.00	7	8
27	1–1–96	2–1–96	4.50	4.00	4.00	4.00	7	8
28	2–1–96	3–1–96	4.25	4.00	4.00	4.00	7	8
29	3–1–96	4–1–96	4.25	4.00	4.00	4.00	7	8
30	4–1–96	5–1–96	4.75	4.00	4.00	4.00	7	8
31	5–1–96	6–1–96	5.00	4.25	4.00	4.00	7	8
32	6–1–96	7–1–96	5.00	4.25	4.00	4.00	7	8
33	7–1–96	8–1–96	5.00	4.25	4.00	4.00	7	8
34	8–1–96	9–1–96	5.25	4.50	4.00	4.00	7	8
35	9–1–96	10–1–96	5.25	4.50	4.00	4.00	7	8
36	10–1–96	11–1–96	5.25	4.50	4.00	4.00	7	8
37	11–1–96	12–1–96	5.00	4.25	4.00	4.00	7	8
38	12–1–96	1–1–97	4.75	4.00	4.00	4.00	7	8
39	1–1–97	2–1–97	4.50	4.00	4.00	4.00	7	8
40	2–1–97	3–1–97	4.75	4.00	4.00	4.00	7	8
41	3–1–97	4–1–97	5.00	4.25	4.00	4.00	7	8
42	4–1–97	5–1–97	4.75	4.00	4.00	4.00	7	8
43	5–1–97	6–1–97	5.00	4.25	4.00	4.00	7	8
44	6–1–97	7–1–97	5.25	4.50	4.00	4.00	7	8

Rate set	For plans with a valuation date		Immediate annuity rate (percent)	Deferred annuities (percent)				
	On or after	Before		i_1	i_2	i_3	n_1	n_2
45	7–1–97	8–1–97	5.25	4.50	4.00	4.00	7	8
46	8–1–97	9–1–97	4.75	4.00	4.00	4.00	7	8
47	9–1–97	10–1–97	4.50	4.00	4.00	4.00	7	8
48	10–1–97	11–1–97	4.75	4.00	4.00	4.00	7	8
49	11–1–97	12–1–97	4.50	4.00	4.00	4.00	7	8
50	12–1–97	1–1–98	4.50	4.00	4.00	4.00	7	8
51	1–1–98	2–1–98	4.25	4.00	4.00	4.00	7	8
52	2–1–98	3–1–98	4.25	4.00	4.00	4.00	7	8
53	3–1–98	4–1–98	4.25	4.00	4.00	4.00	7	8
54	4–1–98	5–1–98	4.25	4.00	4.00	4.00	7	8
55	5–1–98	6–1–98	4.25	4.00	4.00	4.00	7	8
56	6–1–98	7–1–98	4.25	4.00	4.00	4.00	7	8
57	7–1–98	8–1–98	4.00	4.00	4.00	4.00	7	8
58	8–1–98	9–1–98	4.00	4.00	4.00	4.00	7	8
59	9–1–98	10–1–98	4.00	4.00	4.00	4.00	7	8
60	10–1–98	11–1–98	4.00	4.00	4.00	4.00	7	8
61	11–1–98	12–1–98	3.75	4.00	4.00	4.00	7	8
62	12–1–98	1–1–99	4.00	4.00	4.00	4.00	7	8
63	1–1–99	2–1–99	4.00	4.00	4.00	4.00	7	8
64	2–1–99	3–1–99	4.00	4.00	4.00	4.00	7	8
65	3–1–99	4–1–99	4.00	4.00	4.00	4.00	7	8
66	4–1–99	5–1–99	4.25	4.00	4.00	4.00	7	8
67	5–1–99	6–1–99	4.25	4.00	4.00	4.00	7	8
68	6–1–99	7–1–99	4.25	4.00	4.00	4.00	7	8
69	7–1–99	8–1–99	4.50	4.00	4.00	4.00	7	8
70	8–1–99	9–1–99	5.00	4.25	4.00	4.00	7	8
71	9–1–99	10–1–99	5.00	4.25	4.00	4.00	7	8
72	10–1–99	11–1–99	5.00	4.25	4.00	4.00	7	8
73	11–1–99	12–1–99	5.00	4.25	4.00	4.00	7	8
74	12–1–99	1–1–00	5.25	4.50	4.00	4.00	7	8
75	1–1–00	2–1–00	5.00	4.25	4.00	4.00	7	8
76	2–1–00	3–1–00	5.25	4.50	4.00	4.00	7	8
77	3–1–00	4–1–00	5.25	4.50	4.00	4.00	7	8
78	4–1–00	5–1–00	5.25	4.50	4.00	4.00	7	8
79	5–1–00	6–1–00	5.25	4.50	4.00	4.00	7	8
80	6–1–00	7–1–00	5.25	4.50	4.00	4.00	7	8
81	7–1–00	8–1–00	5.50	4.75	4.00	4.00	7	8
82	8–1–00	9–1–00	5.25	4.50	4.00	4.00	7	8
83	9–1–00	10–1–00	5.25	4.50	4.00	4.00	7	8
84	10–1–00	11–1–00	5.00	4.25	4.00	4.00	7	8
85	11–1–00	12–1–00	5.25	4.50	4.00	4.00	7	8
86	12–1–00	1–1–01	5.25	4.50	4.00	4.00	7	8
87	1–1–01	2–1–01	5.00	4.25	4.00	4.00	7	8
88	2–1–01	3–1–01	4.75	4.00	4.00	4.00	7	8
89	3–1–01	4–1–01	4.75	4.00	4.00	4.00	7	8
90	4–1–01	5–1–01	4.75	4.00	4.00	4.00	7	8
91	5–1–01	6–1–01	4.75	4.00	4.00	4.00	7	8
92	6–1–01	7–1–01	5.00	4.25	4.00	4.00	7	8
93	7–1–01	8–1–01	5.00	4.25	4.00	4.00	7	8
94	8–1–01	9–1–01	4.75	4.00	4.00	4.00	7	8
95	9–1–01	10–1–01	4.50	4.00	4.00	4.00	7	8
96	10–1–01	11–1–01	4.50	4.00	4.00	4.00	7	8
97	11–1–01	12–1–01	4.75	4.00	4.00	4.00	7	8
98	12–1–01	1–1–02	4.50	4.00	4.00	4.00	7	8
99	1–1–02	2–1–02	4.50	4.00	4.00	4.00	7	8
100	2–1–02	3–1–02	4.75	4.00	4.00	4.00	7	8
101	3–1–02	4–1–02	4.50	4.00	4.00	4.00	7	8
102	4–1–02	5–1–02	4.25	4.00	4.00	4.00	7	8
103	5–1–02	6–1–02	4.75	4.00	4.00	4.00	7	8
104	6–1–02	7–1–02	4.50	4.00	4.00	4.00	7	8
105	7–1–02	8–1–02	4.50	4.00	4.00	4.00	7	8
106	8–1–02	9–1–02	4.25	4.00	4.00	4.00	7	8
107	9–1–02	10–1–02	4.25	4.00	4.00	4.00	7	8
108	10–1–02	11–1–02	4.00	4.00	4.00	4.00	7	8
109	11–1–02	12–1–02	3.75	4.00	4.00	4.00	7	8
110	12–1–02	1–1–03	4.00	4.00	4.00	4.00	7	8
111	1–1–03	2–1–03	4.00	4.00	4.00	4.00	7	8
112	2–1–03	3–1–03	3.75	4.00	4.00	4.00	7	8
113	3–1–03	4–1–03	3.75	4.00	4.00	4.00	7	8
114	4–1–03	5–1–03	3.50	4.00	4.00	4.00	7	8
115	5–1–03	6–1–03	3.50	4.00	4.00	4.00	7	8

Rate set	For plans with a valuation date		Immediate annuity rate (percent)	Deferred annuities (percent)				
	On or after	Before		i_1	i_2	i_3	n_1	n_2
116	6–1–03	7–1–03	3.50	4.00	4.00	4.00	7	8
117	7–1–03	8–1–03	3.00	4.00	4.00	4.00	7	8
118	8–1–03	9–1–03	3.00	4.00	4.00	4.00	7	8
119	9–1–03	10–1–03	3.50	4.00	4.00	4.00	7	8
120	10–1–03	11–1–03	3.50	4.00	4.00	4.00	7	8
121	11–1–03	12–1–03	3.25	4.00	4.00	4.00	7	8
122	12–1–03	1–1–04	3.25	4.00	4.00	4.00	7	8
123	1–1–04	2–1–04	3.25	4.00	4.00	4.00	7	8
124	2–1–04	3–1–04	3.25	4.00	4.00	4.00	7	8
125	3–1–04	4–1–04	3.00	4.00	4.00	4.00	7	8
126	4–1–04	5–1–04	3.00	4.00	4.00	4.00	7	8
127	5–1–04	6–1–04	3.00	4.00	4.00	4.00	7	8
128	6–1–04	7–1–04	3.50	4.00	4.00	4.00	7	8
129	7–1–04	8–1–04	3.50	4.00	4.00	4.00	7	8
130	8–1–04	9–1–04	3.50	4.00	4.00	4.00	7	8
131	9–1–04	10–1–04	3.25	4.00	4.00	4.00	7	8
132	10–1–04	11–1–04	3.00	4.00	4.00	4.00	7	8
133	11–1–04	12–1–04	2.75	4.00	4.00	4.00	7	8
134	12–1–04	1–1–05	2.75	4.00	4.00	4.00	7	8
135	1–1–05	2–1–05	3.00	4.00	4.00	4.00	7	8
136	2–1–05	3–1–05	3.00	4.00	4.00	4.00	7	8
137	3–1–05	4–1–05	2.75	4.00	4.00	4.00	7	8
138	4–1–05	5–1–05	2.75	4.00	4.00	4.00	7	8
139	5–1–05	6–1–05	2.75	4.00	4.00	4.00	7	8
140	6–1–05	7–1–05	2.50	4.00	4.00	4.00	7	8
141	7–1–05	8–1–05	2.50	4.00	4.00	4.00	7	8
142	8–1–05	9–1–05	2.25	4.00	4.00	4.00	7	8
143	9–1–05	10–1–05	2.50	4.00	4.00	4.00	7	8
144	10–1–05	11–1–05	2.25	4.00	4.00	4.00	7	8
145	11–1–05	12–1–05	2.50	4.00	4.00	4.00	7	8
146	12–1–05	1–1–06	2.75	4.00	4.00	4.00	7	8
147	1–1–06	2–1–06	2.75	4.00	4.00	4.00	7	8
148	2–1–06	3–1–06	2.75	4.00	4.00	4.00	7	8
149	3–1–06	4–1–06	2.75	4.00	4.00	4.00	7	8
150	4–1–06	5–1–06	2.75	4.00	4.00	4.00	7	8
151	5–1–06	6–1–06	3.00	4.00	4.00	4.00	7	8
152	6–1–06	7–1–06	3.25	4.00	4.00	4.00	7	8
153	7–1–06	8–1–06	3.50	4.00	4.00	4.00	7	8
154	8–1–06	9–1–06	3.50	4.00	4.00	4.00	7	8
155	9–1–06	10–1–06	3.25	4.00	4.00	4.00	7	8
156	10–1–06	11–1–06	3.00	4.00	4.00	4.00	7	8
157	11–1–06	12–1–06	2.75	4.00	4.00	4.00	7	8
158	12–1–06	1–1–07	3.00	4.00	4.00	4.00	7	8
159	1–1–07	2–1–07	2.75	4.00	4.00	4.00	7	8
160	2–1–07	3–1–07	3.00	4.00	4.00	4.00	7	8
161	3–1–07	4–1–07	3.00	4.00	4.00	4.00	7	8
162	4–1–07	5–1–07	2.75	4.00	4.00	4.00	7	8
163	5–1–07	6–1–07	3.00	4.00	4.00	4.00	7	8
164	6–1–07	7–1–07	3.00	4.00	4.00	4.00	7	8
165	7–1–07	8–1–07	3.25	4.00	4.00	4.00	7	8
166	8–1–07	9–1–07	3.50	4.00	4.00	4.00	7	8
167	9–1–07	10–1–07	3.25	4.00	4.00	4.00	7	8
168	10–1–07	11–1–07	3.25	4.00	4.00	4.00	7	8
169	11–1–07	12–1–07	3.25	4.00	4.00	4.00	7	8
170	12–1–07	01–1–08	3.00	4.00	4.00	4.00	7	8
171	01–1–08	02–1–08	3.00	4.00	4.00	4.00	7	8
172	02–1–08	03–1–08	3.25	4.00	4.00	4.00	7	8
173	03–1–08	04–1–08	3.00	4.00	4.00	4.00	7	8
174	04–1–08	05–1–08	3.25	4.00	4.00	4.00	7	8
175	05–1–08	06–1–08	3.25	4.00	4.00	4.00	7	8
176	06–1–08	07–1–08	3.25	4.00	4.00	4.00	7	8
177	07–1–08	08–1–08	3.50	4.00	4.00	4.00	7	8
178	08–1–08	09–1–08	3.25	4.00	4.00	4.00	7	8
179	09–1–08	10–1–08	3.50	4.00	4.00	4.00	7	8
180	10–1–08	11–1–08	3.25	4.00	4.00	4.00	7	8
181	11–1–08	12–1–08	3.75	4.00	4.00	4.00	7	8
182	12–1–08	01–1–09	4.75	4.00	4.00	4.00	7	8
183	1–1–09	2–1–09	4.00	4.00	4.00	4.00	7	8
184	2–1–09	3–1–09	3.00	4.00	4.00	4.00	7	8
185	3–1–09	4–1–09	3.50	4.00	4.00	4.00	7	8
186	4–1–09	5–1–09	3.25	4.00	4.00	4.00	7	8

Rate set	For plans with a valuation date		Immediate annuity rate (percent)	Deferred annuities (percent)				
	On or after	Before		i_1	i_2	i_3	n_1	n_2
187	5–1–09	6–1–09	3.50	4.00	4.00	4.00	7	8
188	6–1–09	7–1–09	3.75	4.00	4.00	4.00	7	8
189	7–1–09	8–1–09	3.75	4.00	4.00	4.00	7	8
190	8–1–09	9–1–09	3.00	4.00	4.00	4.00	7	8
191	9–1–09	10–1–09	3.00	4.00	4.00	4.00	7	8
192	10–1–09	11–1–09	2.50	4.00	4.00	4.00	7	8
193	11–1–09	12–1–09	2.25	4.00	4.00	4.00	7	8
194	12–1–09	1–1–10	2.50	4.00	4.00	4.00	7	8
195	1–1–10	2–1–10	2.50	4.00	4.00	4.00	7	8
196	2–1–10	3–1–10	2.75	4.00	4.00	4.00	7	8
197	3–1–10	4–1–10	2.75	4.00	4.00	4.00	7	8
198	4–1–10	5–1–10	2.75	4.00	4.00	4.00	7	8
199	5–1–10	6–1–10	3.00	4.00	4.00	4.00	7	8
200	6–1–10	7–1–10	2.75	4.00	4.00	4.00	7	8
201	7–1–10	8–1–10	2.50	4.00	4.00	4.00	7	8
202	8–1–10	9–1–10	2.25	4.00	4.00	4.00	7	8
203	9–1–10	10–1–10	2.25	4.00	4.00	4.00	7	8
204	10–1–10	11–1–10	1.75	4.00	4.00	4.00	7	8
205	11–1–10	12–1–10	1.75	4.00	4.00	4.00	7	8
206	12–1–10	1–1–11	2.25	4.00	4.00	4.00	7	8
207	1–1–11	2–1–11	2.25	4.00	4.00	4.00	7	8
208	2–1–11	3–1–11	2.50	4.00	4.00	4.00	7	8
209	3–1–11	4–1–11	2.50	4.00	4.00	4.00	7	8
210	4–1–11	5–1–11	2.50	4.00	4.00	4.00	7	8
211	5–1–11	6–1–11	2.50	4.00	4.00	4.00	7	8
212	6–1–11	7–1–11	2.50	4.00	4.00	4.00	7	8
213	7–1–11	8–1–11	2.25	4.00	4.00	4.00	7	8
214	8–1–11	9–1–11	2.25	4.00	4.00	4.00	7	8
215	9–1–11	10–1–11	2.25	4.00	4.00	4.00	7	8
216	10–1–11	11–1–11	1.75	4.00	4.00	4.00	7	8
217	11–1–11	12–1–11	1.50	4.00	4.00	4.00	7	8
218	12–1–11	1–1–12	1.50	4.00	4.00	4.00	7	8
219	1–1–12	2–1–12	1.25	4.00	4.00	4.00	7	8
220	2–1–12	3–1–12	1.25	4.00	4.00	4.00	7	8
221	3–1–12	4–1–12	1.25	4.00	4.00	4.00	7	8
222	4–1–12	5–1–12	1.25	4.00	4.00	4.00	7	8
223	5–1–12	6–1–12	1.50	4.00	4.00	4.00	7	8
224	6–1–12	7–1–12	1.25	4.00	4.00	4.00	7	8
225	7–1–12	8–1–12	1.00	4.00	4.00	4.00	7	8
226	8–1–12	9–1–12	1.00	4.00	4.00	4.00	7	8
227	9–1–12	10–1–12	0.75	4.00	4.00	4.00	7	8
228	10–1–12	11–1–12	0.75	4.00	4.00	4.00	7	8
229	11–1–12	12–1–12	0.75	4.00	4.00	4.00	7	8
230	12–1–12	1–1–13	0.75	4.00	4.00	4.00	7	8
231	1–1–13	2–1–13	0.75	4.00	4.00	4.00	7	8
232	2–1–13	3–1–13	0.75	4.00	4.00	4.00	7	8
233	3–1–13	4–1–13	1.00	4.00	4.00	4.00	7	8
234	4–1–13	5–1–13	1.00	4.00	4.00	4.00	7	8
235	5–1–13	6–1–13	1.00	4.00	4.00	4.00	7	8
236	6–1–13	7–1–13	0.75	4.00	4.00	4.00	7	8
237	7–1–13	8–1–13	1.25	4.00	4.00	4.00	7	8
238	8–1–13	9–1–13	1.75	4.00	4.00	4.00	7	8
239	9–1–13	10–1–13	1.50	4.00	4.00	4.00	7	8
240	10–1–13	11–1–13	1.75	4.00	4.00	4.00	7	8
241	11–1–13	12–1–13	1.75	4.00	4.00	4.00	7	8
242	12–1–13	01–1–14	1.75	4.00	4.00	4.00	7	8
243	1–1–14	2–1–14	1.75	4.00	4.00	4.00	7	8
244	2–1–14	3–1–14	1.75	4.00	4.00	4.00	7	8
245	3–1–14	4–1–14	1.50	4.00	4.00	4.00	7	8
246	4–1–14	5–1–14	1.50	4.00	4.00	4.00	7	8
247	5–1–14	6–1–14	1.50	4.00	4.00	4.00	7	8
248	6–1–14	7–1–14	1.25	4.00	4.00	4.00	7	8
249	7–1–14	8–1–14	1.25	4.00	4.00	4.00	7	8

[61 FR 34059, July 1, 1996]

EDITORIAL NOTE: For FEDERAL REGISTER citations affecting part 4022, appendix B, see the List of CFR Sections Affected, which appears in the Finding Aids section of the printed volume and at *www.fdsys.gov*.

APPENDIX C TO PART 4022—LUMP SUM INTEREST RATES FOR PRIVATE-SECTOR PAYMENTS

[In using this table: (1) For benefits for which the participant or beneficiary is entitled to be in pay status on the valuation date, the immediate annuity rate shall apply; (2) For benefits for which the deferral period is y years (where y is an integer and $0 < y \leq n_1$), interest rate i_1 shall apply from the valuation date for a period of y years, and thereafter the immediate annuity rate shall apply; (3) For benefits for which the deferral period is y years (where y is an integer and $n_1 < y \leq n_1 + n_2$), interest rate i_2 shall apply from the valuation date for a period of $y - n_1$ years, interest rate i_1 shall apply for the following n_1 years, and thereafter the immediate annuity rate shall apply; (4) For benefits for which the deferral period is y years (where y is an integer and $y > n_1 + n_2$), interest rate i_3 shall apply from the valuation date for a period of $y - n_1 - n_2$ years, interest rate i_2 shall apply for the following n_2 years, interest rate i_1 shall apply for the following n_1 years, and thereafter the immediate annuity rate shall apply.]

Rate set	For plans with a valuation date		Immediate annuity rate (percent)	Deferred annuities (percent)				
	On or after	Before		i_1	i_2	i_3	n_1	n_2
1	11–1–93	12–1–93	4.25	4.00	4.00	4.00	7	8
2	12–1–93	1–1–94	4.25	4.00	4.00	4.00	7	8
3	1–1–94	2–1–94	4.50	4.00	4.00	4.00	7	8
4	2–1–94	3–1–94	4.50	4.00	4.00	4.00	7	8
5	3–1–94	4–1–94	4.50	4.00	4.00	4.00	7	8
6	4–1–94	5–1–94	4.75	4.00	4.00	4.00	7	8
7	5–1–94	6–1–94	5.25	4.50	4.00	4.00	7	8
8	6–1–94	7–1–94	5.25	4.50	4.00	4.00	7	8
9	7–1–94	8–1–94	5.50	4.75	4.00	4.00	7	8
10	8–1–94	9–1–94	5.75	5.00	4.00	4.00	7	8
11	9–1–94	10–1–94	5.50	4.75	4.00	4.00	7	8
12	10–1–94	11–1–94	5.50	4.75	4.00	4.00	7	8
13	11–1–94	12–1–94	6.00	5.25	4.00	4.00	7	8
14	12–1–94	1–1–95	6.25	5.50	4.25	4.00	7	8
15	1–1–95	2–1–95	6.00	5.25	4.00	4.00	7	8
16	2–1–95	3–1–95	6.00	5.25	4.00	4.00	7	8
17	3–1–95	4–1–95	6.00	5.25	4.00	4.00	7	8
18	4–1–95	5–1–95	5.75	5.00	4.00	4.00	7	8
19	5–1–95	6–1–95	5.50	4.75	4.00	4.00	7	8
20	6–1–95	7–1–95	5.50	4.75	4.00	4.00	7	8
21	7–1–95	8–1–95	4.75	4.00	4.00	4.00	7	8
22	8–1–95	9–1–95	4.75	4.00	4.00	4.00	7	8
23	9–1–95	10–1–95	5.00	4.25	4.00	4.00	7	8
24	10–1–95	11–1–95	4.75	4.00	4.00	4.00	7	8
25	11–1–95	12–1–95	4.75	4.00	4.00	4.00	7	8
26	12–1–95	1–1–96	4.50	4.00	4.00	4.00	7	8
27	1–1–96	2–1–96	4.50	4.00	4.00	4.00	7	8
28	2–1–96	3–1–96	4.25	4.00	4.00	4.00	7	8
29	3–1–96	4–1–96	4.25	4.00	4.00	4.00	7	8
30	4–1–96	5–1–96	4.75	4.00	4.00	4.00	7	8
31	5–1–96	6–1–96	5.00	4.25	4.00	4.00	7	8
32	6–1–96	7–1–96	5.00	4.25	4.00	4.00	7	8
33	7–1–96	8–1–96	5.00	4.25	4.00	4.00	7	8
34	8–1–96	9–1–96	5.25	4.50	4.00	4.00	7	8
35	9–1–96	10–1–96	5.25	4.50	4.00	4.00	7	8
36	10–1–96	11–1–96	5.25	4.50	4.00	4.00	7	8
37	11–1–96	12–1–96	5.00	4.25	4.00	4.00	7	8
38	12–1–96	1–1–97	4.75	4.00	4.00	4.00	7	8
39	1–1–97	2–1–97	4.50	4.00	4.00	4.00	7	8
40	2–1–97	3–1–97	4.75	4.00	4.00	4.00	7	8
41	3–1–97	4–1–97	5.00	4.25	4.00	4.00	7	8
42	4–1–97	5–1–97	4.75	4.00	4.00	4.00	7	8
43	5–1–97	6–1–97	5.00	4.25	4.00	4.00	7	8
44	6–1–97	7–1–97	5.25	4.50	4.00	4.00	7	8
45	7–1–97	8–1–97	5.25	4.50	4.00	4.00	7	8
46	8–1–97	9–1–97	4.75	4.00	4.00	4.00	7	8
47	9–1–97	10–1–97	4.50	4.00	4.00	4.00	7	8
48	10–1–97	11–1–97	4.75	4.00	4.00	4.00	7	8
49	11–1–97	12–1–97	4.50	4.00	4.00	4.00	7	8
50	12–1–97	1–1–98	4.50	4.00	4.00	4.00	7	8
51	1–1–98	2–1–98	4.25	4.00	4.00	4.00	7	8
52	2–1–98	3–1–98	4.25	4.00	4.00	4.00	7	8
53	3–1–98	4–1–98	4.25	4.00	4.00	4.00	7	8
54	4–1–98	5–1–98	4.25	4.00	4.00	4.00	7	8

Rate set	For plans with a valuation date		Immediate annuity rate (percent)	Deferred annuities (percent)				
	On or after	Before		i_1	i_2	i_3	n_1	n_2
55	5–1–98	6–1–98	4.25	4.00	4.00	4.00	7	8
56	6–1–98	7–1–98	4.25	4.00	4.00	4.00	7	8
57	7–1–98	8–1–98	4.00	4.00	4.00	4.00	7	8
58	8–1–98	9–1–98	4.00	4.00	4.00	4.00	7	8
59	9–1–98	10–1–98	4.00	4.00	4.00	4.00	7	8
60	10–1–98	11–1–98	4.00	4.00	4.00	4.00	7	8
61	11–1–98	12–1–98	3.75	4.00	4.00	4.00	7	8
62	12–1–98	1–1–99	4.00	4.00	4.00	4.00	7	8
63	1–1–99	2–1–99	4.00	4.00	4.00	4.00	7	8
64	2–1–99	3–1–99	4.00	4.00	4.00	4.00	7	8
65	3–1–99	4–1–99	4.00	4.00	4.00	4.00	7	8
66	4–1–99	5–1–99	4.25	4.00	4.00	4.00	7	8
67	5–1–99	6–1–99	4.25	4.00	4.00	4.00	7	8
68	6–1–99	7–1–99	4.25	4.00	4.00	4.00	7	8
69	7–1–99	8–1–99	4.50	4.00	4.00	4.00	7	8
70	8–1–99	9–1–99	5.00	4.25	4.00	4.00	7	8
71	9–1–99	10–1–99	5.00	4.25	4.00	4.00	7	8
72	10–1–99	11–1–99	5.00	4.25	4.00	4.00	7	8
73	11–1–99	12–1–99	5.00	4.25	4.00	4.00	7	8
74	12–1–99	1–1–00	5.25	4.50	4.00	4.00	7	8
75	1–1–00	2–1–00	5.00	4.25	4.00	4.00	7	8
76	2–1–00	3–1–00	5.25	4.50	4.00	4.00	7	8
77	3–1–00	4–1–00	5.25	4.50	4.00	4.00	7	8
78	4–1–00	5–1–00	5.25	4.50	4.00	4.00	7	8
79	5–1–00	6–1–00	5.25	4.50	4.00	4.00	7	8
80	6–1–00	7–1–00	5.25	4.50	4.00	4.00	7	8
81	7–1–00	8–1–00	5.50	4.75	4.00	4.00	7	8
82	8–1–00	9–1–00	5.25	4.50	4.00	4.00	7	8
83	9–1–00	10–1–00	5.25	4.50	4.00	4.00	7	8
84	10–1–00	11–1–00	5.00	4.25	4.00	4.00	7	8
85	11–1–00	12–1–00	5.25	4.50	4.00	4.00	7	8
86	12–1–00	1–1–01	5.25	4.50	4.00	4.00	7	8
87	1–1–01	2–1–01	5.00	4.25	4.00	4.00	7	8
88	2–1–01	3–1–01	4.75	4.00	4.00	4.00	7	8
89	3–1–01	4–1–01	4.75	4.00	4.00	4.00	7	8
90	4–1–01	5–1–01	4.75	4.00	4.00	4.00	7	8
91	5–1–01	6–1–01	4.75	4.00	4.00	4.00	7	8
92	6–1–01	7–1–01	5.00	4.25	4.00	4.00	7	8
93	7–1–01	8–1–01	5.00	4.25	4.00	4.00	7	8
94	8–1–01	9–1–01	4.75	4.00	4.00	4.00	7	8
95	9–1–01	10–1–01	4.50	4.00	4.00	4.00	7	8
96	10–1–01	11–1–01	4.50	4.00	4.00	4.00	7	8
97	11–1–01	12–1–01	4.75	4.00	4.00	4.00	7	8
98	12–1–01	1–1–02	4.50	4.00	4.00	4.00	7	8
99	1–1–02	2–1–02	4.50	4.00	4.00	4.00	7	8
100	2–1–02	3–1–02	4.75	4.00	4.00	4.00	7	8
101	3–1–02	4–1–02	4.50	4.00	4.00	4.00	7	8
102	4–1–02	5–1–02	4.25	4.00	4.00	4.00	7	8
103	5–1–02	6–1–02	4.75	4.00	4.00	4.00	7	8
104	6–1–02	7–1–02	4.50	4.00	4.00	4.00	7	8
105	7–1–02	8–1–02	4.50	4.00	4.00	4.00	7	8
106	8–1–02	9–1–02	4.25	4.00	4.00	4.00	7	8
107	9–1–02	10–1–02	4.25	4.00	4.00	4.00	7	8
108	10–1–02	11–1–02	4.00	4.00	4.00	4.00	7	8
109	11–1–02	12–1–02	3.75	4.00	4.00	4.00	7	8
110	12–1–02	1–1–03	4.00	4.00	4.00	4.00	7	8
111	1–1–03	2–1–03	4.00	4.00	4.00	4.00	7	8
112	2–1–03	3–1–03	3.75	4.00	4.00	4.00	7	8
113	3–1–03	4–1–03	3.75	4.00	4.00	4.00	7	8
114	4–1–03	5–1–03	3.50	4.00	4.00	4.00	7	8
115	5–1–03	6–1–03	3.50	4.00	4.00	4.00	7	8
116	6–1–03	7–1–03	3.50	4.00	4.00	4.00	7	8
117	7–1–03	8–1–03	3.00	4.00	4.00	4.00	7	8
118	8–1–03	9–1–03	3.00	4.00	4.00	4.00	7	8
119	9–1–03	10–1–03	3.50	4.00	4.00	4.00	7	8
120	10–1–03	11–1–03	3.50	4.00	4.00	4.00	7	8
121	11–1–03	12–1–03	3.25	4.00	4.00	4.00	7	8
122	12–1–03	1–1–04	3.25	4.00	4.00	4.00	7	8
123	1–1–04	2–1–04	3.25	4.00	4.00	4.00	7	8
124	2–1–04	3–1–04	3.25	4.00	4.00	4.00	7	8
125	3–1–04	4–1–04	3.00	4.00	4.00	4.00	7	8
126	4–1–04	5–1–04	3.00	4.00	4.00	4.00	7	8

Rate set	For plans with a valuation date		Immediate annuity rate (percent)	Deferred annuities (percent)				
	On or after	Before		i_1	i_2	i_3	n_1	n_2
127	5–1–04	6–1–04	3.00	4.00	4.00	4.00	7	8
128	6–1–04	7–1–04	3.50	4.00	4.00	4.00	7	8
129	7–1–04	8–1–04	3.50	4.00	4.00	4.00	7	8
130	8–1–04	9–1–04	3.50	4.00	4.00	4.00	7	8
131	9–1–04	10–1–04	3.25	4.00	4.00	4.00	7	8
132	10–1–04	11–1–04	3.00	4.00	4.00	4.00	7	8
133	11–1–04	12–1–04	2.75	4.00	4.00	4.00	7	8
134	12–1–04	1–1–05	2.75	4.00	4.00	4.00	7	8
135	1–1–05	2–1–05	3.00	4.00	4.00	4.00	7	8
136	2–1–05	3–1–05	3.00	4.00	4.00	4.00	7	8
137	3–1–05	4–1–05	2.75	4.00	4.00	4.00	7	8
138	4–1–05	5–1–05	2.75	4.00	4.00	4.00	7	8
139	5–1–05	6–1–05	2.75	4.00	4.00	4.00	7	8
140	6–1–05	7–1–05	2.50	4.00	4.00	4.00	7	8
141	7–1–05	8–1–05	2.50	4.00	4.00	4.00	7	8
142	8–1–05	9–1–05	2.25	4.00	4.00	4.00	7	8
143	9–1–05	10–1–05	2.50	4.00	4.00	4.00	7	8
144	10–1–05	11–1–05	2.25	4.00	4.00	4.00	7	8
145	11–1–05	12–1–05	2.50	4.00	4.00	4.00	7	8
146	12–1–05	1–1–06	2.75	4.00	4.00	4.00	7	8
147	1–1–06	2–1–06	2.75	4.00	4.00	4.00	7	8
148	2–1–06	3–1–06	2.75	4.00	4.00	4.00	7	8
149	3–1–06	4–1–06	2.75	4.00	4.00	4.00	7	8
150	4–1–06	5–1–06	2.75	4.00	4.00	4.00	7	8
151	5–1–06	6–1–06	3.00	4.00	4.00	4.00	7	8
152	6–1–06	7–1–06	3.25	4.00	4.00	4.00	7	8
153	7–1–06	8–1–06	3.50	4.00	4.00	4.00	7	8
154	8–1–06	9–1–06	3.50	4.00	4.00	4.00	7	8
155	9–1–06	10–1–06	3.25	4.00	4.00	4.00	7	8
156	10–1–06	11–1–06	3.00	4.00	4.00	4.00	7	8
157	11–1–06	12–1–06	2.75	4.00	4.00	4.00	7	8
158	12–1–06	1–1–07	3.00	4.00	4.00	4.00	7	8
159	1–1–07	2–1–07	2.75	4.00	4.00	4.00	7	8
160	2–1–07	3–1–07	3.00	4.00	4.00	4.00	7	8
161	3–1–07	4–1–07	3.00	4.00	4.00	4.00	7	8
162	4–1–07	5–1–07	2.75	4.00	4.00	4.00	7	8
163	5–1–07	6–1–07	3.00	4.00	4.00	4.00	7	8
164	6–1–07	7–1–07	3.00	4.00	4.00	4.00	7	8
165	7–1–07	8–1–07	3.25	4.00	4.00	4.00	7	8
166	8–1–07	9–1–07	3.50	4.00	4.00	4.00	7	8
167	9–1–07	10–1–07	3.25	4.00	4.00	4.00	7	8
168	10–1–07	11–1–07	3.25	4.00	4.00	4.00	7	8
169	11–1–07	12–1–07	3.25	4.00	4.00	4.00	7	8
170	12–1–07	01–1–08	3.00	4.00	4.00	4.00	7	8
171	01–1–08	02–1–08	3.00	4.00	4.00	4.00	7	8
172	02–1–08	03–1–08	3.25	4.00	4.00	4.00	7	8
173	03–1–08	04–1–08	3.00	4.00	4.00	4.00	7	8
174	04–1–08	05–1–08	3.25	4.00	4.00	4.00	7	8
175	05–1–08	06–1–08	3.25	4.00	4.00	4.00	7	8
176	06–1–08	07–1–08	3.25	4.00	4.00	4.00	7	8
177	07–1–08	08–1–08	3.50	4.00	4.00	4.00	7	8
178	08–1–08	09–1–08	3.25	4.00	4.00	4.00	7	8
179	09–1–08	10–1–08	3.50	4.00	4.00	4.00	7	8
180	10–1–08	11–1–08	3.25	4.00	4.00	4.00	7	8
181	11–1–08	12–1–08	3.75	4.00	4.00	4.00	7	8
182	12–1–08	01–1–09	4.75	4.00	4.00	4.00	7	8
183	1–1–09	2–1–09	4.00	4.00	4.00	4.00	7	8
184	2–1–09	3–1–09	3.00	4.00	4.00	4.00	7	8
185	3–1–09	4–1–09	3.50	4.00	4.00	4.00	7	8
186	4–1–09	5–1–09	3.25	4.00	4.00	4.00	7	8
187	5–1–09	6–1–09	3.50	4.00	4.00	4.00	7	8
188	6–1–09	7–1–09	3.75	4.00	4.00	4.00	7	8
189	7–1–09	8–1–09	3.75	4.00	4.00	4.00	7	8
190	8–1–09	9–1–09	3.00	4.00	4.00	4.00	7	8
191	9–1–09	10–1–09	3.00	4.00	4.00	4.00	7	8
192	10–1–09	11–1–09	2.50	4.00	4.00	4.00	7	8
193	11–1–09	12–1–09	2.25	4.00	4.00	4.00	7	8
194	12–1–09	1–1–10	2.50	4.00	4.00	4.00	7	8
195	1–1–10	2–1–10	2.50	4.00	4.00	4.00	7	8
196	2–1–10	3–1–10	2.75	4.00	4.00	4.00	7	8
197	3–1–10	4–1–10	2.75	4.00	4.00	4.00	7	8
198	4–1–10	5–1–10	2.75	4.00	4.00	4.00	7	8

Rate set	For plans with a valuation date		Immediate annuity rate (percent)	Deferred annuities (percent)				
	On or after	Before		i_1	i_2	i_3	n_1	n_2
199	5–1–10	6–1–10	3.00	4.00	4.00	4.00	7	8
200	6–1–10	7–1–10	2.75	4.00	4.00	4.00	7	8
201	7–1–10	8–1–10	2.50	4.00	4.00	4.00	7	8
202	8–1–10	9–1–10	2.25	4.00	4.00	4.00	7	8
203	9–1–10	10–1–10	2.25	4.00	4.00	4.00	7	8
204	10–1–10	11–1–10	1.75	4.00	4.00	4.00	7	8
205	11–1–10	12–1–10	1.75	4.00	4.00	4.00	7	8
206	12–1–10	1–1–11	2.25	4.00	4.00	4.00	7	8
207	1–1–11	2–1–11	2.25	4.00	4.00	4.00	7	8
208	2–1–11	3–1–11	2.50	4.00	4.00	4.00	7	8
209	3–1–11	4–1–11	2.50	4.00	4.00	4.00	7	8
210	4–1–11	5–1–11	2.50	4.00	4.00	4.00	7	8
211	5–1–11	6–1–11	2.50	4.00	4.00	4.00	7	8
212	6–1–11	7–1–11	2.50	4.00	4.00	4.00	7	8
213	7–1–11	8–1–11	2.25	4.00	4.00	4.00	7	8
214	8–1–11	9–1–11	2.25	4.00	4.00	4.00	7	8
215	9–1–11	10–1–11	2.25	4.00	4.00	4.00	7	8
216	10–1–11	11–1–11	1.75	4.00	4.00	4.00	7	8
217	11–1–11	12–1–11	1.50	4.00	4.00	4.00	7	8
218	12–1–11	1–1–12	1.50	4.00	4.00	4.00	7	8
219	1–1–12	2–1–12	1.25	4.00	4.00	4.00	7	8
220	2–1–12	3–1–12	1.25	4.00	4.00	4.00	7	8
221	3–1–12	4–1–12	1.25	4.00	4.00	4.00	7	8
222	4–1–12	5–1–12	1.25	4.00	4.00	4.00	7	8
223	5–1–12	6–1–12	1.50	4.00	4.00	4.00	7	8
224	6–1–12	7–1–12	1.25	4.00	4.00	4.00	7	8
225	7–1–12	8–1–12	1.00	4.00	4.00	4.00	7	8
226	8–1–12	9–1–12	1.00	4.00	4.00	4.00	7	8
227	9–1–12	10–1–12	0.75	4.00	4.00	4.00	7	8
228	10–1–12	11–1–12	0.75	4.00	4.00	4.00	7	8
229	11–1–12	12–1–12	0.75	4.00	4.00	4.00	7	8
230	12–1–12	1–1–13	0.75	4.00	4.00	4.00	7	8
231	1–1–13	2–1–13	0.75	4.00	4.00	4.00	7	8
232	2–1–13	3–1–13	0.75	4.00	4.00	4.00	7	8
233	3–1–13	4–1–13	1.00	4.00	4.00	4.00	7	8
234	4–1–13	5–1–13	1.00	4.00	4.00	4.00	7	8
235	5–1–13	6–1–13	1.00	4.00	4.00	4.00	7	8
236	6–1–13	7–1–13	0.75	4.00	4.00	4.00	7	8
237	7–1–13	8–1–13	1.25	4.00	4.00	4.00	7	8
238	8–1–13	9–1–13	1.75	4.00	4.00	4.00	7	8
239	9–1–13	10–1–13	1.50	4.00	4.00	4.00	7	8
240	10–1–13	11–1–13	1.75	4.00	4.00	4.00	7	8
241	11–1–13	12–1–13	1.75	4.00	4.00	4.00	7	8
242	12–1–13	01–1–14	1.75	4.00	4.00	4.00	7	8
243	1–1–14	2–1–14	1.75	4.00	4.00	4.00	7	8
244	2–1–14	3–1–14	1.75	4.00	4.00	4.00	7	8
245	3–1–14	4–1–14	1.50	4.00	4.00	4.00	7	8
246	4–1–14	5–1–14	1.50	4.00	4.00	4.00	7	8
247	5–1–14	6–1–14	1.50	4.00	4.00	4.00	7	8
248	6–1–14	7–1–14	1.25	4.00	4.00	4.00	7	8
249	7–1–14	8–1–14	1.25	4.00	4.00	4.00	7	8

[65 FR 14755, Mar. 17, 2000]

EDITORIAL NOTE: For FEDERAL REGISTER citations affecting part 4022, appendix C, see the List of CFR Sections Affected, which appears in the Finding Aids section of the printed volume and at *www.fdsys.gov*.

PART 4022B—AGGREGATE LIMITS ON GUARANTEED BENEFITS

AUTHORITY: 29 U.S.C. 1302(b)(3), 1322B.

§ 4022B.1 Aggregate payments limitation.

(a) *Benefits with respect to two or more plans.* If a person (or persons) is entitled to benefits payable with respect to one participant in two or more plans, the aggregate benefits payable by PBGC from its funds is limited by

§ 4022.22 of this chapter (without regard to § 4022.22(a)). The PBGC will determine the limitation as of the date of the last plan termination.

(b) *Benefits with respect to two or more participants.* The PBGC will not aggregate the benefits payable with respect to one participant with the benefits payable with respect to any other participant (e.g., if an individual is entitled to benefits both as a participant and as the spouse of a deceased participant).

[67 FR 16959, Apr. 8, 2002]

SUBCHAPTER E—PLAN TERMINATIONS

PART 4041—TERMINATION OF SINGLE-EMPLOYER PLANS

Subpart A—General Provisions

Sec.
4041.1 Purpose and scope.
4041.2 Definitions.
4041.3 Computation of time; filing and issuance rules.
4041.4 Disaster relief.
4041.5 Record retention and availability.
4041.6 Effect of failure to provide required information.
4041.7 Challenges to plan termination under collective bargaining agreement.
4041.8 Post-termination amendments.

Subpart B—Standard Termination Process

4041.21 Requirements for a standard termination.
4041.22 Administration of plan during pendency of termination process.
4041.23 Notice of intent to terminate.
4041.24 Notices of plan benefits.
4041.25 Standard termination notice.
4041.26 PBGC review of standard termination notice.
4041.27 Notice of annuity information.
4041.28 Closeout of plan.
4041.29 Post-distribution certification.
4041.30 Requests for deadline extensions.
4041.31 Notice of noncompliance.

Subpart C—Distress Termination Process

4041.41 Requirements for a distress termination.
4041.42 Administration of plan during termination process.
4041.43 Notice of intent to terminate.
4041.44 PBGC review of notice of intent to terminate.
4041.45 Distress termination notice.
4041.46 PBGC determination of compliance with requirements for distress termination.
4041.47 PBGC determination of plan sufficiency/insufficiency.
4041.48 Sufficient plans; notice requirements.
4041.49 Verification of plan sufficiency prior to closeout.
4041.50 Closeout of plan.
4041.51 Disclosure of information by plan administrator in distress termination.

AUTHORITY: 29 U.S.C. 1302(b)(3), 1341, 1344, 1350.

SOURCE: 62 FR 60428, Nov. 7, 1997, unless otherwise noted.

Subpart A—General Provisions

§ 4041.1 Purpose and scope.

This part sets forth the rules and procedures for terminating a single-employer plan in a standard or distress termination under section 4041 of ERISA, the exclusive means of voluntarily terminating a plan.

§ 4041.2 Definitions.

The following terms are defined in § 4001.2 of this chapter: affected party, annuity, benefit liabilities, Code, contributing sponsor, controlled group, distress termination, distribution date, EIN, employer, ERISA, guaranteed benefit, insurer, irrevocable commitment, IRS, mandatory employee contributions, normal retirement age, notice of intent to terminate, PBGC, person, plan administrator, plan year, PN, single-employer plan, standard termination, termination date, and title IV benefit. In addition, for purposes of this part:

Distress termination notice means the notice filed with the PBGC pursuant to § 4041.45.

Distribution notice means the notice issued to the plan administrator by the PBGC pursuant to § 4041.47(c) upon the PBGC's determination that the plan has sufficient assets to pay at least guaranteed benefits.

Majority owner means, with respect to a contributing sponsor of a single-employer plan, an individual who owns, directly or indirectly, 50 percent or more (taking into account the constructive ownership rules of section 414(b) and (c) of the Code) of—

(1) An unincorporated trade or business;

(2) The capital interest or the profits interest in a partnership; or

(3) Either the voting stock of a corporation or the value of all of the stock of a corporation.

Notice of noncompliance means a notice issued to a plan administrator by the PBGC pursuant to § 4041.31 advising the plan administrator that the requirements for a standard termination

have not been satisfied and that the plan is an ongoing plan.

Notice of plan benefits means the notice to each participant and beneficiary required by § 4041.24.

Participant means—

(1) Any individual who is currently in employment covered by the plan and who is earning or retaining credited service under the plan, including any individual who is considered covered under the plan for purposes of meeting the minimum participation requirements but who, because of offset or similar provisions, does not have any accrued benefits;

(2) Any nonvested individual who is not currently in employment covered by the plan but who is earning or retaining credited service under the plan; and

(3) Any individual who is retired or separated from employment covered by the plan and who is receiving benefits under the plan or is entitled to begin receiving benefits under the plan in the future, excluding any such individual to whom an insurer has made an irrevocable commitment to pay all the benefits to which the individual is entitled under the plan.

Plan benefits means benefit liabilities determined as of the termination date (taking into account the rules in § 4041.8(a)).

Proposed termination date means the date specified as such by the plan administrator in the notice of intent to terminate or, if later, in the standard or distress termination notice.

Residual assets means the plan assets remaining after all plan benefits and other liabilities (e.g., PBGC premiums) of the plan have been satisfied (taking into account the rules in § 4041.8(b)).

Standard termination notice means the notice filed with the PBGC pursuant to § 4041.25.

State guaranty association means an association of insurers created by a State, the District of Columbia, or the Commonwealth of Puerto Rico to pay benefits and to continue coverage, within statutory limits, under life and health insurance policies and annuity contracts when an insurer fails.

§ 4041.3 Computation of time; filing and issuance rules.

(a) *Computation of time.* The PBGC applies the rules in subpart D of part 4000 of this chapter to compute any time period under this part. A proposed termination date may be any day, including a weekend or Federal holiday.

(b) *Filing with the PBGC*—(1) *Method and date of filing.* The PBGC applies the rules in subpart A of part 4000 of this chapter to determine permissible methods of filing with the PBGC under this part. The PBGC applies the rules in subpart C of part 4000 of this chapter to determine the date that a submission under this part was filed with the PBGC.

(2) *Where to file.* See § 4000.4 of this chapter for information on where to file.

(c) *Issuance to third parties.* The following rules apply to affected parties (other than the PBGC). For purposes of this paragraph (c), a person entitled to notice under the spin-off/termination transaction rules of § 4041.23(c) or § 4041.24(f) is treated as an affected party.

(1) *Method and date of issuance.* The PBGC applies the rules in subpart B of part 4000 of this chapter to determine permissible methods of issuance under this part. The PBGC applies the rules in subpart C of part 4000 of this chapter to determine the date that an issuance under this part was provided.

(2) *Omission of affected parties.* The failure to issue any notice to an affected party (other than any employee organization) within the specified time period will not cause the notice to be untimely if—

(i) *After-discovered affected parties.* The plan administrator could not reasonably have been expected to know of the affected party, and issues the notice promptly after discovering the affected party; or

(ii) *Unlocated participants.* The plan administrator could not locate the affected party after making reasonable efforts, and issues the notice promptly in the event the affected party is located.

(3) *Deceased participants.* In the case of a deceased participant, the plan administrator need not issue a notice to

the participant's estate if the estate is not entitled to a distribution.

(4) *Form of notices to affected parties.* All notices to affected parties must be readable and written in a manner calculated to be understood by the average plan participant. The plan administrator may provide additional information with a notice only if the information is not misleading.

(5) *Foreign languages.* The plan administrator of a plan that (as of the proposed termination date) covers the numbers or percentages in § 2520.104b–10(e) of this title of participants literate only in the same non-English language must, for any notice to affected parties—

(i) Include a prominent legend in that common non-English language advising them how to obtain assistance in understanding the notice; or

(ii) Provide the notice in that common non-English language to those affected parties literate only in that language.

[62 FR 60428, Nov. 7, 1997, as amended at 68 FR 61353, Oct. 28, 2003]

§ 4041.4 Disaster relief.

When the President of the United States declares that, under the Disaster Relief Act (42 U.S.C. 5121, 5122(2), 5141(b)), a major disaster exists, the Executive Director of the PBGC (or his or her designee) may, by issuing one or more notices of disaster relief, extend by up to 180 days any due date under this part.

§ 4041.5 Record retention and availability.

(a) *Retention requirement*—(1) *Persons subject to requirement; records to be retained.* Each contributing sponsor and the plan administrator of a plan terminating in a standard termination, or in a distress termination that closes out in accordance with § 4041.50, must maintain all records necessary to demonstrate compliance with section 4041 of ERISA and this part. If a contributing sponsor or the plan administrator maintains information in accordance with this section, the other(s) need not maintain that information.

(2) *Retention period.* The records described in paragraph (a)(1) of this section must be preserved for six years after the date when the post-distribution certification under this part is filed with the PBGC.

(3) *Electronic recordkeeping.* The contributing sponsor or plan administrator may use electronic media for maintenance and retention of records required by this part in accordance with the requirements of subpart E of part 4000 of this chapter.

(b) *Availability of records.* The contributing sponsor or plan administrator must make all records needed to determine compliance with section 4041 of ERISA and this part available to the PBGC upon request for inspection and photocopying (or, for electronic records, inspection, electronic copying, and printout) at the location where they are kept (or another, mutually agreeable, location) and must submit such records to the PBGC within 30 days after the date of a written request by the PBGC or by a later date specified therein.

[68 FR 61353, Oct. 28, 2003]

§ 4041.6 Effect of failure to provide required information.

If a plan administrator fails to provide any information required under this part within the specified time limit, the PBGC may assess a penalty under section 4071 of ERISA of up to $1,100 a day for each day that the failure continues. The PBGC may also pursue any other equitable or legal remedies available to it under the law, including, if appropriate, the issuance of a notice of noncompliance under § 4041.31.

§ 4041.7 Challenges to plan termination under collective bargaining agreement.

(a) *Suspension upon formal challenge to termination*—(1) *Notice of formal challenge.* (i) If the PBGC is advised, before its review period under § 4041.26(a) ends, or before issuance of a notice of inability to determine sufficiency or a distribution notice under § 4041.47(b) or (c), that a formal challenge to the termination has been initiated as described in paragraph (c) of this section, the PBGC will suspend the termination proceeding and so advise the plan administrator in writing.

(ii) If the PBGC is advised of a challenge described in paragraph (a)(1)(i) of this section after the time specified therein, the PBGC may suspend the termination proceeding and will so advise the plan administrator in writing.

(2) *Standard terminations.* During any period of suspension in a standard termination—

(i) The running of all time periods specified in ERISA or this part relevant to the termination will be suspended; and

(ii) The plan administrator must comply with the prohibitions in § 4041.22.

(3) *Distress terminations.* During any period of suspension in a distress termination—

(i) The issuance by the PBGC of any notice of inability to determine sufficiency or distribution notice will be stayed or, if any such notice was previously issued, its effectiveness will be stayed;

(ii) The plan administrator must comply with the prohibitions in § 4041.42; and

(iii) The plan administrator must file a distress termination notice with the PBGC pursuant to § 4041.45.

(b) *Existing collective bargaining agreement.* For purposes of this section, an existing collective bargaining agreement means a collective bargaining agreement that has not been made inoperative by a judicial ruling and, by its terms, either has not expired or is extended beyond its stated expiration date because neither of the collective bargaining parties took the required action to terminate it. When a collective bargaining agreement no longer meets these conditions, it ceases to be an ''existing collective bargaining agreement,'' whether or not any or all of its terms may continue to apply by operation of law.

(c) *Formal challenge to termination.* A formal challenge to a plan termination asserting that the termination would violate the terms and conditions of an existing collective bargaining agreement is initiated when—

(1) Any procedure specified in the collective bargaining agreement for resolving disputes under the agreement commences; or

(2) Any action before an arbitrator, administrative agency or board, or court under applicable labor-management relations law commences.

(d) *Resolution of challenge.* Immediately upon the final resolution of the challenge, the plan administrator must notify the PBGC in writing of the outcome of the challenge, provide the PBGC with a copy of any award or order, and, if the validity of the proposed termination has been upheld, advise the PBGC whether the proposed termination is to proceed. The final resolution ends the suspension period under paragraph (a) of this section.

(1) *Challenge sustained.* If the final resolution is that the proposed termination violates an existing collective bargaining agreement, the PBGC will dismiss the termination proceeding, all actions taken to effect the plan termination will be null and void, and the plan will be an ongoing plan. In this event, in a distress termination, § 4041.42(d) will apply as of the date of the dismissal by the PBGC.

(2) *Termination sustained.* If the final resolution is that the proposed termination does not violate an existing collective bargaining agreement and the plan administrator has notified the PBGC that the termination is to proceed, the PBGC will reactivate the termination proceeding by sending a written notice thereof to the plan administrator, and—

(i) The termination proceeding will continue from the point where it was suspended;

(ii) All actions taken to effect the termination before the suspension will be effective;

(iii) Any time periods that were suspended will resume running from the date of the PBGC's notice of the reactivation of the proceeding;

(iv) Any time periods that had fewer than 15 days remaining will be extended to the 15th day after the date of the PBGC's notice, or such later date as the PBGC may specify; and

(v) In a distress termination, the PBGC will proceed to issue a notice of inability to determine sufficiency or a distribution notice (or reactivate any such notice stayed under paragraph (a)(3) of this section), either with or

without first requesting updated information from the plan administrator pursuant to § 4041.45(c).

(e) *Final resolution of challenge.* A formal challenge to a proposed termination is finally resolved when—

(1) The parties involved in the challenge enter into a settlement that resolves the challenge;

(2) A final award, administrative decision, or court order is issued that is not subject to review or appeal; or

(3) A final award, administrative decision, or court order is issued that is not appealed, or review or enforcement of which is not sought, within the time for filing an appeal or requesting review or enforcement.

(f) *Involuntary termination by the PBGC.* Notwithstanding any other provision of this section, the PBGC retains the authority in any case to initiate a plan termination in accordance with the provisions of section 4042 of ERISA.

§ 4041.8 Post-termination amendments.

(a) *Plan benefits.* A participant's or beneficiary's plan benefits are determined under the plan's provisions in effect on the plan's termination date. Notwithstanding the preceding sentence, an amendment that is adopted after the plan's termination date is taken into account with respect to a participant's or beneficiary's plan benefits to the extent the amendment—

(1) Does not decrease the value of the participant's or beneficiary's plan benefits under the plan's provisions in effect on the termination date; and

(2) Does not eliminate or restrict any form of benefit available to the participant or beneficiary on the plan's termination date.

(b) *Residual assets.* In a plan in which participants or beneficiaries will receive some or all of the plan's residual assets based on an allocation formula, the amount of the plan's residual assets and each participant's or beneficiary's share thereof is determined under the plan's provisions in effect on the plan's termination date. Notwithstanding the preceding sentence, an amendment adopted after the plan's termination date is taken into account with respect to a participant's or beneficiary's allocation of residual assets to the extent the amendment does not decrease the value of the participant's or beneficiary's allocation of residual assets under the plan's provisions in effect on the termination date.

(c) *Permitted decreases.* For purposes of this section, an amendment shall not be treated as decreasing the value of a participant's or beneficiary's plan benefits or allocation of residual assets to the extent—

(1) The decrease is necessary to meet a qualification requirement under section 401 of the Code;

(2) The participant's or beneficiary's allocation of residual assets is paid in the form of an increase in the participant's or beneficiary's plan benefits; or

(3) The decrease is offset by assets that would otherwise revert to the contributing sponsor or by additional contributions.

(d) *Distress terminations.* In the case of a distress termination, a participant's or beneficiary's benefit liabilities are determined as of the termination date in the same manner as plan benefits under this section.

Subpart B—Standard Termination Process

§ 4041.21 Requirements for a standard termination.

(a) *Notice and distribution requirements.* A standard termination is valid if the plan administrator—

(1) Issues a notice of intent to terminate to all affected parties (other than the PBGC) in accordance with § 4041.23;

(2) Issues notices of plan benefits to all affected parties entitled to plan benefits in accordance with § 4041.24;

(3) Files a standard termination notice with the PBGC in accordance with § 4041.25;

(4) Distributes the plan's assets in satisfaction of plan benefits in accordance with § 4041.28(a) and (c); and

(5) In the case of a spin-off/termination transaction (as defined in § 4041.23(c)), issues the notices required by § 4041.23(c), § 4041.24(f), and § 4041.27(a)(2) in accordance with such sections.

(b) *Plan sufficiency*—(1) *Commitment to make plan sufficient.* A contributing sponsor of a plan or any other member of the plan's controlled group may make a commitment to contribute any

additional sums necessary to enable the plan to satisfy plan benefits in accordance with § 4041.28. A commitment will be valid only if—

(i) It is made to the plan;

(ii) It is in writing, signed by the contributing sponsor or controlled group member(s); and

(iii) In any case in which the person making the commitment is the subject of a bankruptcy liquidation or reorganization proceeding, as described in § 4041.41(c)(1) or (c)(2), the commitment is approved by the court before which the liquidation or reorganization proceeding is pending or a person not in bankruptcy unconditionally guarantees to meet the commitment at or before the time distribution of assets is required.

(2) *Alternative treatment of majority owner's benefit.* A majority owner may elect to forgo receipt of his or her plan benefits to the extent necessary to enable the plan to satisfy all other plan benefits in accordance with § 4041.28. Any such alternative treatment of the majority owner's plan benefits is valid only if—

(i) The majority owner's election is in writing;

(ii) In any case in which the plan would require the spouse of the majority owner to consent to distribution of the majority owner's receipt of his or her plan benefits in a form other than a qualified joint and survivor annuity, the spouse consents in writing to the election;

(iii) The majority owner makes the election and the spouse consents during the time period beginning with the date of issuance of the first notice of intent to terminate and ending with the date of the last distribution; and

(iv) Neither the majority owner's election nor the spouse's consent is inconsistent with a qualified domestic relations order (as defined in section 206(d)(3) of ERISA).

§ 4041.22 Administration of plan during pendency of termination process.

(a) *In general.* A plan administrator may distribute plan assets in connection with the termination of the plan only in accordance with the provisions of this part. From the first day the plan administrator issues a notice of intent to terminate to the last day of the PBGC's review period under § 4041.26(a), the plan administrator must continue to carry out the normal operations of the plan. During that time period, except as provided in paragraph (b) of this section, the plan administrator may not—

(1) Purchase irrevocable commitments to provide any plan benefits; or

(2) Pay benefits attributable to employer contributions, other than death benefits, in any form other than an annuity.

(b) *Exception.* The plan administrator may pay benefits attributable to employer contributions either through the purchase of irrevocable commitments or in a form other than an annuity if—

(1) The participant has separated from active employment or is otherwise permitted under the Code to receive the distribution;

(2) The distribution is consistent with prior plan practice; and

(3) The distribution is not reasonably expected to jeopardize the plan's sufficiency for plan benefits.

§ 4041.23 Notice of intent to terminate.

(a) *Notice requirement*—(1) *In general.* At least 60 days and no more than 90 days before the proposed termination date, the plan administrator must issue a notice of intent to terminate to each person (other than the PBGC) that is an affected party as of the proposed termination date. In the case of a beneficiary of a deceased participant or an alternate payee, the plan administrator must issue a notice of intent to terminate promptly to any person that becomes an affected party after the proposed termination date and on or before the distribution date.

(2) *Early issuance of NOIT.* The PBGC may consider a notice of intent to terminate to be timely under paragraph (a)(1) of this section if the notice was early by a *de minimis* number of days and the PBGC finds that the early issuance was the result of administrative error.

(b) *Contents of notice.* The PBGC's standard termination forms and instructions package includes a model

notice of intent to terminate. The notice of intent to terminate must include—

(1) *Identifying information.* The name and PN of the plan, the name and EIN of each contributing sponsor, and the name, address, and telephone number of the person who may be contacted by an affected party with questions concerning the plan's termination;

(2) *Intent to terminate plan.* A statement that the plan administrator intends to terminate the plan in a standard termination as of a specified proposed termination date and will notify the affected party if the proposed termination date is changed to a later date or if the termination does not occur;

(3) *Sufficiency requirement.* A statement that, in order to terminate in a standard termination, plan assets must be sufficient to provide all plan benefits under the plan;

(4) *Cessation of accruals.* A statement (as applicable) that—

(i) Benefit accruals will cease as of the termination date, but will continue if the plan does not terminate;

(ii) A plan amendment has been adopted under which benefit accruals will cease, in accordance with section 204(h) of ERISA, as of the proposed termination date or a specified date before the proposed termination date, whether or not the plan is terminated; or

(iii) Benefit accruals ceased, in accordance with section 204(h) of ERISA, as of a specified date before the notice of intent to terminate was issued;

(5) *Annuity information.* If required under § 4041.27, the annuity information described therein;

(6) *Benefit information.* A statement that each affected party entitled to plan benefits will receive a written notification regarding his or her plan benefits;

(7) *Summary plan description.* A statement as to how an affected party entitled to receive the latest updated summary plan description under section 104(b) of ERISA can obtain it.

(8) *Continuation of monthly benefits.* For persons who are, as of the proposed termination date, in pay status, a statement (as applicable)—

(i) That their monthly (or other periodic) benefit amounts will not be affected by the plan's termination; or

(ii) Explaining how their monthly (or other periodic) benefit amounts will be affected under plan provisions); and

(9) *Extinguishment of guarantee.* A statement that after plan assets have been distributed in full satisfaction of all plan benefits under the plan with respect to a participant or a beneficiary of a deceased participant, either by the purchase of irrevocable commitments (annuity contracts) or by an alternative form of distribution provided for under the plan, the PBGC no longer guarantees that participant's or beneficiary's plan benefits.

(c) *Spin-off/termination transactions.* In the case of a transaction in which a single defined benefit plan is split into two or more plans and there is a reversion of residual assets to an employer upon the termination of one or more but fewer than all of the resulting plans (a ''spin-off/termination transaction''), the plan administrator must, within the time period specified in paragraph (a) of this section, provide a notice describing the transaction to all participants, beneficiaries of deceased participants, and alternate payees in the original plan who are, as of the proposed termination date, covered by an ongoing plan.

§ 4041.24 Notices of plan benefits.

(a) *Notice requirement.* The plan administrator must, no later than the time the plan administrator files the standard termination notice with the PBGC, issue a notice of plan benefits to each person (other than the PBGC and any employee organization) who is an affected party as of the proposed termination date. In the case of a beneficiary of a deceased participant or an alternate payee, the plan administrator must issue a notice of plan benefits promptly to any person that becomes an affected party after the proposed termination date and on or before the distribution date.

(b) *Contents of notice.* The plan administrator must include in each notice of plan benefits—

(1) The name and PN of the plan, the name and EIN of each contributing sponsor, and the name, address, and

telephone number of an individual who may be contacted to answer questions concerning plan benefits;

(2) The proposed termination date given in the notice of intent to terminate and any extended proposed termination date under §4041.25(b);

(3) If the amount of plan benefits set forth in the notice is an estimate, a statement that the amount is an estimate and that plan benefits paid may be greater than or less than the estimate;

(4) Except in the case of an affected party in pay status for more than one year as of the proposed termination date—

(i) The personal data (if available) needed to calculate the affected party's plan benefits, along with a statement requesting that the affected party promptly correct any information he or she believes to be incorrect; and

(ii) If any of the personal data needed to calculate the affected party's plan benefits is not available, the best available data, along with a statement informing the affected party of the data not available and affording him or her the opportunity to provide it; and

(5) The information in paragraphs (c) through (e) of this section, as applicable.

(c) *Benefits of persons in pay status.* For an affected party in pay status as of the proposed termination date, the plan administrator must include in the notice of plan benefits—

(1) The amount and form of the participant's or beneficiary's plan benefits payable as of the proposed termination date;

(2) The amount and form of plan benefits, if any, payable to a beneficiary upon the participant's death and the name of the beneficiary; and

(3) The amount and date of any increase or decrease in the benefit scheduled to occur (or that has already occurred) after the proposed termination date and an explanation of the increase or decrease, including, where applicable, a reference to the pertinent plan provision.

(d) *Benefits of persons with valid elections or de minimis benefits.* For an affected party who, as of the proposed termination date, has validly elected a form and starting date with respect to plan benefits not yet in pay status, or with respect to whom the plan administrator has determined that a nonconsensual lump sum distribution will be made, the plan administrator must include in the notice of plan benefits—

(1) The amount and form of the person's plan benefits payable as of the projected benefit starting date, and what that date is;

(2) The information in paragraphs (c)(2) and (c)(3) of this section;

(3) If the plan benefits will be paid in any form other than a lump sum and the age at which, or form in which, the plan benefits will be paid differs from the normal retirement benefit—

(i) The age or form stated in the plan; and

(ii) The age or form adjustment factors; and

(4) If the plan benefits will be paid in a lump sum—

(i) An explanation of when a lump sum may be paid without the consent of the participant or the participant's spouse;

(ii) A description of the mortality table used to convert to the lump sum benefit (e.g., the mortality table published by the IRS in Revenue Ruling 95–6, 1995–1 C.B. 80) and a reference to the pertinent plan provisions;

(iii) A description of the interest rate to be used to convert to the lump sum benefit (e.g., the 30-year Treasury rate for the third month before the month in which the lump sum is distributed), a reference to the pertinent plan provision, and (if known) the applicable interest rate;

(iv) An explanation of how interest rates are used to calculate lump sums;

(v) A statement that the use of a higher interest rate results in a smaller lump sum amount; and

(vi) A statement that the applicable interest rate may change before the distribution date.

(e) *Benefits of all other persons not in pay status.* For any other affected party not described in paragraph (c) or (d) of this section (or described therein only with respect to a portion of the affected party's plan benefits), the plan administrator must include in the notice of plan benefits—

(1) The amount and form of the person's plan benefits payable at normal

retirement age in any one form permitted under the plan;

(2) Any alternative benefit forms, including those payable to a beneficiary upon the person's death either before or after benefits commence;

(3) If the person is or may become entitled to a benefit that would be payable before normal retirement age, the amount and form of benefit that would be payable at the earliest benefit commencement date (or, if more than one such form is payable at the earliest benefit commencement date, any one of those forms) and whether the benefit commencing on such date would be subject to future reduction; and

(4) If the plan benefits may be paid in a lump sum, the information in paragraph (d)(4) of this section.

(f) *Spin-off/termination transactions.* In the case of a spin-off/termination transaction (as defined in § 4041.23(c)), the plan administrator must, no later than the time the plan administrator files the standard termination notice for any terminating plan, provide all participants, beneficiaries of deceased participants, and alternate payees in the original plan who are (as of the proposed termination date) covered by an ongoing plan with a notice of plan benefits containing the information in paragraphs (b) through (e) of this section.

§ 4041.25 Standard termination notice.

(a) *Notice requirement.* The plan administrator must file with the PBGC a standard termination notice, consisting of the PBGC Form 500, completed in accordance with the instructions thereto, on or before the 180th day after the proposed termination date.

(b) *Change of proposed termination date.* The plan administrator may, in the standard termination notice, select a proposed termination date that is later than the date specified in the notice of intent to terminate, provided it is not later than 90 days after the earliest date on which a notice of intent to terminate was issued to any affected party.

(c) *Request for IRS determination letter.* To qualify for the distribution deadline in § 4041.28(a)(1)(ii), the plan administrator must submit to the IRS a valid request for a determination of the plan's qualification status upon termination (''determination letter'') by the time the standard termination notice is filed.

§ 4041.26 PBGC review of standard termination notice.

(a) *Review period*—(1) *In general.* The PBGC will notify the plan administrator in writing of the date on which it received a complete standard termination notice at the address provided in the PBGC's standard termination forms and instructions package. If the PBGC does not issue a notice of noncompliance under § 4041.31 during its 60-day review period following such date, the plan administrator must proceed to close out the plan in accordance with § 4041.28.

(2) *Extension of review period.* The PBGC and the plan administrator may, before the expiration of the PBGC review period in paragraph (a)(1) of this section, agree in writing to extend that period.

(b) *If standard termination notice is incomplete*—(1) *For purposes of timely filing.* If the standard termination notice is incomplete, the PBGC may, based on the nature and extent of the omission, provide the plan administrator an opportunity to complete the notice. In such a case, the standard termination notice will be deemed to have been complete as of the date when originally filed for purposes of § 4041.25(a), provided the plan administrator provides the missing information by the later of—

(i) The 180th day after the proposed termination date; or

(ii) The 30th day after the date of the PBGC notice that the filing was incomplete.

(2) *For purposes of PBGC review period.* If the standard termination notice is completed under paragraph (b)(1) of this section, the PBGC will determine whether the notice will be deemed to have been complete as of the date when originally filed for purposes of determining when the PBGC's review period begins under § 4041.26(a)(1).

(c) *Additional information*—(1) *Deadline for providing additional information.* The PBGC may in any case require the submission of additional information

relevant to the termination proceeding. Any such additional information becomes part of the standard termination notice and must be submitted within 30 days after the date of a written request by the PBGC, or within a different time period specified therein. The PBGC may in its discretion shorten the time period where it determines that the interests of the PBGC or participants may be prejudiced by a delay in receipt of the information.

(2) *Effect on termination proceeding.* A request for additional information will suspend the running of the PBGC's 60-day review period. The review period will begin running again on the day the required information is received and continue for the greater of—

(i) The number of days remaining in the review period; or

(ii) Five regular business days.

§ 4041.27 Notice of annuity information.

(a) *Notice requirement*—(1) *In general.* The plan administrator must provide notices in accordance with this section to each affected party entitled to plan benefits other than an affected party whose plan benefits will be distributed in the form of a nonconsensual lump sum.

(2) *Spin-off/termination transactions.* The plan administrator must provide the information in paragraph (d) of this section to a person entitled to notice under §§ 4041.23(c) or 4041.24(f), at the same time and in the same manner as required for an affected party.

(b) *Content of notice.* The plan administrator must include, as part of the notice of intent to terminate—

(1) *Identity of insurers.* The name and address of the insurer or insurers from whom (if known), or (if not) from among whom, the plan administrator intends to purchase irrevocable commitments (annuity contracts);

(2) *Change in identity of insurers.* A statement that if the plan administrator later decides to select a different insurer, affected parties will receive a supplemental notice no later than 45 days before the distribution date; and

(3) *State guaranty association coverage information.* A statement informing the affected party—

(i) That once the plan distributes a benefit in the form of an annuity purchased from an insurance company, the insurance company takes over the responsibility for paying that benefit;

(ii) That all states, the District of Columbia, and the Commonwealth of Puerto Rico have established ''guaranty associations'' to protect policy holders in the event of an insurance company's financial failure;

(iii) That a guaranty association is responsible for all, part, or none of the annuity if the insurance company cannot pay;

(iv) That each guaranty association has dollar limits on the extent of its guaranty coverage, along with a general description of the applicable dollar coverage limits;

(v) That in most cases the policy holder is covered by the guaranty association for the state where he or she lives at the time the insurance company fails to pay; and

(vi) How to obtain the addresses and telephone numbers of guaranty association offices from the PBGC (as described in the applicable forms and instructions package).

(c) *Where insurer(s) not known*—(1) *Extension of deadline for notice.* If the identity-of-insurer information in paragraph (b)(1) of this section is not known at the time the plan administrator is required to provide it to an affected party as part of a notice of intent to terminate, the plan administrator must instead provide it in a supplemental notice under paragraph (d) of this section.

(2) *Alternative NOIT information.* A plan administrator that qualifies for the extension in paragraph (c)(1) of this section with respect to a notice of intent to terminate must include therein (in lieu of the information in paragraph (b) of this section) a statement that—

(i) Irrevocable commitments (annuity contracts) may be purchased from an insurer to provide some or all of the benefits under the plan;

(ii) The insurer or insurers have not yet been identified; and

(iii) Affected parties will be notified at a later date (but no later than 45 days before the distribution date) of the name and address of the insurer or insurers from whom (if known), or (if

not) from among whom, the plan administrator intends to purchase irrevocable commitments (annuity contracts).

(d) *Supplemental notice.* The plan administrator must provide a supplemental notice to an affected party in accordance with this paragraph (d) if the plan administrator did not previously notify the affected party of the identity of insurer(s) or, after having previously notified the affected party of the identity of insurer(s), decides to select a different insurer. A failure to provide a required supplemental notice to an affected party will be deemed to be a failure to comply with the notice of intent to terminate requirements.

(1) *Deadline for supplemental notice.* The deadline for issuing the supplemental notice is 45 days before the affected party's distribution date (or, in the case of an employee organization, 45 days before the earliest distribution date for any affected party that it represents).

(2) *Content of supplemental notice.* The supplemental notice must include—

(i) The identity-of-insurer information in paragraph (b)(1) of this section;

(ii) The information regarding change of identity of insurer(s) in paragraph (b)(2) of this section; and

(iii) Unless the state guaranty association coverage information in paragraph (b)(3) of this section was previously provided to the affected party, such information and the extinguishment-of-guarantee information in § 4041.23(b)(9).

§ 4041.28 Closeout of plan.

(a) *Distribution deadline*—(1) *In general.* Unless a notice of noncompliance is issued under § 4041.31(a), the plan administrator must complete the distribution of plan assets in satisfaction of plan benefits (through priority category 6 under section 4044 of ERISA and part 4044 of this chapter) by the later of—

(i) 180 days after the expiration of the PBGC's 60-day (or extended) review period under § 4041.26(a); or

(ii) If the plan administrator meets the requirements of § 4041.25(c), 120 days after receipt of a favorable determination from the IRS.

(2) *Revocation of notice of noncompliance.* If the PBGC revokes a notice of noncompliance issued under § 4041.31(a), the distribution deadline is extended until the 180th day after the date of the revocation.

(b) *Assets insufficient to satisfy plan benefits.* If, at the time of any distribution, the plan administrator determines that plan assets are not sufficient to satisfy all plan benefits (with assets determined net of other liabilities, including PBGC premiums), the plan administrator may not make any further distribution of assets to effect the plan's termination and must promptly notify the PBGC.

(c) *Method of distribution*—(1) *In general.* The plan administrator must, in accordance with all applicable requirements under the Code and ERISA, distribute plan assets in satisfaction of all plan benefits by purchase of an irrevocable commitment from an insurer or in another permitted form.

(2) *Lump sum calculations.* In the absence of evidence establishing that another date is the ''annuity starting date'' under the Code, the distribution date is the ''annuity starting date'' for purposes of—

(i) Calculating the present value of plan benefits that may be provided in a form other than by purchase of an irrevocable commitment from an insurer (e.g., in selecting the interest rate(s) to be used to value a lump sum distribution); and

(ii) Determining whether plan benefits will be paid in such other form.

(3) *Selection of insurer.* In the case of plan benefits that will be provided by purchase of an irrevocable commitment from an insurer, the plan administrator must select the insurer in accordance with the fiduciary standards of Title I of ERISA.

(4) *Participating annuity contracts.* In the case of a plan in which any residual assets will be distributed to participants, a participating annuity contract may be purchased to satisfy the requirement that annuities be provided by the purchase of irrevocable commitments only if the portion of the price of the contract that is attributable to the participation feature—

(i) Is not taken into account in determining the amount of residual assets; and

(ii) Is not paid from residual assets allocable to participants.

(5) *Missing participants.* The plan administrator must distribute plan benefits to missing participants in accordance with part 4050.

(d) *Provision of annuity contract.* If plan benefits are provided through the purchase of irrevocable commitments—

(1) Either the plan administrator or the insurer must, within 30 days after it is available, provide each participant and beneficiary with a copy of the annuity contract or certificate showing the insurer's name and address and clearly reflecting the insurer's obligation to provide the participant's or beneficiary's plan benefits; and

(2) If such a contract or certificate is not provided to the participant or beneficiary by the date on which the post-distribution certification is required to be filed in order to avoid the assessment of penalties under § 4041.29(b), the plan administrator must, no later than that date, provide the participant and beneficiary with a notice that includes—

(i) A statement that the obligation for providing the participant's or beneficiary's plan benefits has transferred to the insurer;

(ii) The name and address of the insurer;

(iii) The name, address, and telephone number of the person designated by the insurer to answer questions concerning the annuity; and

(iv) A statement that the participant or beneficiary will receive from the plan administrator or insurer a copy of the annuity contract or a certificate showing the insurer's name and address and clearly reflecting the insurer's obligation to provide the participant's or beneficiary's plan benefits.

§ 4041.29 Post-distribution certification.

(a) *Deadline.* Within 30 days after the last distribution date for any affected party, the plan administrator must file with the PBGC a post-distribution certification consisting of the PBGC Form 501, completed in accordance with the instructions thereto.

(b) *Assessment of penalties.* The PBGC will assess a penalty for late filing of a post-distribution certification only to the extent the certification is filed more than 90 days after the distribution deadline (including extensions) under § 4041.28(a).

§ 4041.30 Requests for deadline extensions.

(a) *In general.* The PBGC may in its discretion extend a deadline for taking action under this subpart to a later date. The PBGC will grant such an extension where it finds compelling reasons why it is not administratively feasible for the plan administrator (or other persons acting on behalf of the plan administrator) to take the action until the later date and the delay is brief. The PBGC will consider—

(1) The length of the delay; and

(2) Whether ordinary business care and prudence in attempting to meet the deadline is exercised.

(b) *Time of extension request.* Any request for an extension under paragraph (a) of this section that is filed later than the 15th day before the applicable deadline must include a justification for not filing the request earlier.

(c) *IRS determination letter requests.* Any request for an extension under paragraph (a) of this section of the deadline in § 4041.25(c) for submitting a determination letter request to the IRS (in order to qualify for the distribution deadline in § 4041.28(a)(1)(ii)) will be deemed to be granted unless the PBGC notifies the plan administrator otherwise within 60 days after receipt of the request (or, if later, by the end of the PBGC's review period under § 4041.26(a)). The PBGC will notify the plan administrator in writing of the date on which it receives such request.

(d) *Statutory deadlines not extendable.* The PBGC will not—

(1) *Pre-distribution deadlines.* (i) Extend the 60-day time limit under § 4041.23(a) for issuing the notice of intent to terminate; or

(ii) Waive the requirement in § 4041.24(a) that the notice of plan benefits be issued by the time the plan administrator files the standard termination notice with the PBGC; or

(2) *Post-distribution deadlines.* Extend the deadline under § 4041.29(a) for filing

the post-distribution certification. However, the PBGC will assess a penalty for late filing of a post-distribution certification only under the circumstances described in § 4041.29(b).

§ 4041.31 Notice of noncompliance.

(a) *Failure to meet pre-distribution requirements*—(1) *In general.* Except as provided in paragraphs (a)(2) and (c) of this section, the PBGC will issue a notice of noncompliance within the 60-day (or extended) time period prescribed by § 4041.26(a) whenever it determines that—

(i) The plan administrator failed to issue the notice of intent to terminate to all affected parties (other than the PBGC) in accordance with § 4041.23;

(ii) The plan administrator failed to issue notices of plan benefits to all affected parties entitled to plan benefits in accordance with § 4041.24;

(iii) The plan administrator failed to file the standard termination notice in accordance with § 4041.25;

(iv) As of the distribution date proposed in the standard termination notice, plan assets will not be sufficient to satisfy all plan benefits under the plan; or

(v) In the case of a spin-off/termination transaction (as described in § 4041.23(c)), the plan administrator failed to issue any notice required by § 4041.23(c), § 4041.24(f), or § 4041.27(a)(2) in accordance with such section.

(2) *Interests of participants.* The PBGC may decide not to issue a notice of noncompliance based on a failure to meet a requirement under paragraphs (a)(1)(i) through (a)(1)(iii) or (a)(1)(v) of this section if it determines that issuance of the notice would be inconsistent with the interests of participants and beneficiaries.

(3) *Continuing authority.* The PBGC may issue a notice of noncompliance or suspend the termination proceeding based on a failure to meet a requirement under paragraphs (a)(1)(i) through (a)(1)(v) of this section after expiration of the 60-day (or extended) time period prescribed by § 4041.26(a) (including upon audit) if the PBGC determines such action is necessary to carry out the purposes of Title IV.

(b) *Failure to meet distribution requirements*—(1) *In general.* If the PBGC determines, as part of an audit or otherwise, that the plan administrator has not satisfied any distribution requirement of § 4041.28(a) or (c), it may issue a notice of noncompliance.

(2) *Criteria.* In deciding whether to issue a notice of noncompliance under paragraph (b)(1) of this section, the PBGC may consider—

(i) The nature and extent of the failure to satisfy a requirement of § 4041.28(a) or (c);

(ii) Any corrective action taken by the plan administrator; and

(iii) The interests of participants and beneficiaries.

(3) *Late distributions.* The PBGC will not issue a notice of noncompliance for failure to distribute timely based on any facts disclosed in the post-distribution certification if 60 or more days have passed from the PBGC's receipt of the post-distribution certification. The 60-day period may be extended by agreement between the plan administrator and the PBGC.

(c) *Correction of errors.* The PBGC will not issue a notice of noncompliance based solely on the plan administrator's inclusion of erroneous information (or omission of correct information) in a notice required to be provided to any person under this part if—

(1) The PBGC determines that the plan administrator acted in good faith in connection with the error;

(2) The plan administrator corrects the error no later than—

(i) In the case of an error in the notice of plan benefits under § 4041.24, the latest date an election notice may be provided to the person; or

(ii) In any other case, as soon as practicable after the plan administrator knows or should know of the error, or by any later date specified by the PBGC; and

(3) The PBGC determines that the delay in providing the correct information will not substantially harm any person.

(d) *Reconsideration.* A plan administrator may request reconsideration of a notice of noncompliance in accordance with the rules prescribed in part 4003, subpart C.

(e) *Consequences of notice of noncompliance*—(1) *Effect on termination.* A notice of noncompliance ends the

standard termination proceeding, nullifies all actions taken to terminate the plan, and renders the plan an ongoing plan. A notice of noncompliance is effective upon the expiration of the period within which the plan administrator may request reconsideration under paragraph (d) of this section or, if reconsideration is requested, a decision by the PBGC upholding the notice. However, once a notice is issued, the running of all time periods specified in ERISA or this part relevant to the termination will be suspended, and the plan administrator may take no further action to terminate the plan (except by initiation of a new termination) unless and until the notice is revoked. A plan administrator that still desires to terminate a plan must initiate the termination process again, starting with the issuance of a new notice of intent to terminate.

(2) *Effect on plan administration.* If the PBGC issues a notice of noncompliance, the prohibitions in §4041.22(a)(1) and (a)(2) will cease to apply—

(i) Upon expiration of the period during which reconsideration may be requested or, if earlier, at the time the plan administrator decides not to request reconsideration; or

(ii) If reconsideration is requested, upon PBGC issuance of a decision on reconsideration upholding the notice of noncompliance.

(3) *Revocation of notice of noncompliance.* If a notice of noncompliance is revoked, unless the PBGC provides otherwise, any time period suspended by the issuance of the notice will resume running from the date of the revocation. In no case will the review period under §4041.26(a) end less than 60 days from the date the PBGC received the standard termination notice.

(f) *If no notice of noncompliance is issued.* A standard termination is deemed to be valid if—

(1) The plan administrator files a standard termination notice under §4041.25 and the PBGC does not issue a notice of noncompliance pursuant to §4041.31(a); and

(2) The plan administrator files a post-distribution certification under §4041.29 and the PBGC does not issue a notice of noncompliance pursuant to §4041.31(b).

(g) *Notice to affected parties.* Upon a decision by the PBGC on reconsideration affirming the issuance of a notice of noncompliance or, if earlier, upon the plan administrator's decision not to request reconsideration, the plan administrator must notify the affected parties (other than the PBGC), and any persons who were provided notice under §4041.23(c), in writing that the plan is not going to terminate or, if applicable, that the termination was invalid but that a new notice of intent to terminate is being issued.

Subpart C—Distress Termination Process

§4041.41 Requirements for a distress termination.

(a) *Distress requirements.* A plan may be terminated in a distress termination only if—

(1) The plan administrator issues a notice of intent to terminate to each affected party in accordance with §4041.43 at least 60 days and (except with PBGC approval) not more than 90 days before the proposed termination date;

(2) The plan administrator files a distress termination notice with the PBGC in accordance with §4041.45 no later than 120 days after the proposed termination date; and

(3) The PBGC determines that each contributing sponsor and each member of its controlled group satisfy one of the distress criteria set forth in paragraph (c) of this section.

(b) *Effect of failure to satisfy requirements.* (1) Except as provided in paragraph (b)(2)(i) of this section, if the plan administrator does not satisfy all of the requirements for a distress termination, any action taken to effect the plan termination is null and void, and the plan is an ongoing plan. A plan administrator who still desires to terminate the plan must initiate the termination process again, starting with the issuance of a new notice of intent to terminate.

(2)(i) The PBGC may, upon its own motion, waive any requirement with respect to notices to be filed with the PBGC under paragraph (a)(1) or (a)(2) of this section if the PBGC believes that

it will be less costly or administratively burdensome to the PBGC to do so. The PBGC will not entertain requests for waivers under this paragraph.

(ii) Notwithstanding any other provision of this part, the PBGC retains the authority in any case to initiate a plan termination in accordance with the provisions of section 4042 of ERISA.

(c) *Distress criteria.* In a distress termination, each contributing sponsor and each member of its controlled group must satisfy at least one (but not necessarily the same one) of the following criteria in order for a distress termination to occur:

(1) *Liquidation.* This criterion is met if, as of the proposed termination date—

(i) A person has filed or had filed against it a petition seeking liquidation in a case under title 11, United States Code, or under a similar federal law or law of a State or political subdivision of a State, or a case described in paragraph (e)(2) of this section has been converted to such a case; and

(ii) The case has not been dismissed.

(2) *Reorganization.* This criterion is met if—

(i) As of the proposed termination date, a person has filed or had filed against it a petition seeking reorganization in a case under title 11, United States Code, or under a similar law of a state or a political subdivision of a state, or a case described in paragraph (e)(1) of this section has been converted to such a case;

(ii) As of the proposed termination date, the case has not been dismissed;

(iii) The person notifies the PBGC of any request to the bankruptcy court (or other appropriate court in a case under such similar law of a state or a political subdivision of a state) for approval of the plan termination by concurrently filing with the PBGC a copy of the motion requesting court approval, including any documents submitted in support of the request; and

(iv) The bankruptcy court or other appropriate court determines that, unless the plan is terminated, such person will be unable to pay all its debts pursuant to a plan of reorganization and will be unable to continue in business outside the reorganization process and approves the plan termination.

(3) *Inability to continue in business.* This criterion is met if a person demonstrates to the satisfaction of the PBGC that, unless a distress termination occurs, the person will be unable to pay its debts when due and to continue in business.

(4) *Unreasonably burdensome pension costs.* This criterion is met if a person demonstrates to the satisfaction of the PBGC that the person's costs of providing pension coverage have become unreasonably burdensome solely as a result of declining covered employment under all single-employer plans for which that person is a contributing sponsor.

(d) *Non-duplicative efforts.* (1) If a person requests approval of the plan termination by a court, as described in paragraph (c)(2) of this section, the PBGC—

(i) Will normally enter an appearance to request that the court make specific findings as to whether the contributing sponsor or controlled group member meets the distress test in paragraph (c)(3) of this section, or state that it is unable to make such findings;

(ii) Will provide the court with any information it has that may be germane to the court's ruling;

(iii) Will, if the person has requested, or later requests, a determination by the PBGC under paragraph (c)(3) of this section, defer action on the request until the court makes its determination; and

(iv) Will be bound by a final and non-appealable order of the court.

(2) If a person requests a determination by the PBGC under paragraph (c)(3) of this section, the PBGC determines that the distress criterion is not met, and the person thereafter requests approval of the plan termination by a court, as described in paragraph (c)(2) of this section, the PBGC will advise the court of its determination and make its administrative record available to the court.

(e) *Non-recognition of certain actions.* If the PBGC finds that a person undertook any action or failed to act for the principal purpose of satisfying any of the distress criteria contained in paragraph (c) of this section, rather than

for a reasonable business purpose, the PBGC will disregard such act or failure to act in determining whether the person has satisfied any of those criteria.

(f) *Requests for deadline extensions.* The PBGC may extend any deadline under this subpart in accordance with the rules described in section § 4041.30, except that the PBGC will not extend—

(1) *Pre-distribution deadlines.* The 60-day time limit under § 4041.43(a) for issuing the notice of intent to terminate; or

(2) *Post-distribution deadlines.* The deadline under § 4041.50 for filing the post-distribution certification.

§ 4041.42 Administration of plan during termination process.

(a) *General rule.* Except to the extent specifically prohibited by this section, during the pendency of termination proceedings the plan administrator must continue to carry out the normal operations of the plan, such as putting participants into pay status, collecting contributions due the plan, and investing plan assets.

(b) *Prohibitions after issuing notice of intent to terminate.* The plan administrator may not make loans to plan participants beginning on the first day he or she issues a notice of intent to terminate, and from that date until a distribution is permitted pursuant to § 4041.50, the plan administrator may not—

(1) Distribute plan assets pursuant to, or (except as required by this part) take any other actions to implement, the termination of the plan;

(2) Pay benefits attributable to employer contributions, other than death benefits, in any form other than as an annuity; or

(3) Purchase irrevocable commitments to provide benefits from an insurer.

(c) *Limitation on benefit payments on or after proposed termination date.* Beginning on the proposed termination date, the plan administrator must reduce benefits to the level determined under part 4022, subpart D, of this chapter.

(d) *Failure to qualify for distress termination.* In any case where the PBGC determines, pursuant to § 4041.44(c) or § 4041.46(c)(1), that the requirements for a distress termination are not satisfied—

(1) The prohibitions in paragraph (b) of this section, other than those in paragraph (b)(1), will cease to apply—

(i) Upon expiration of the period during which reconsideration may be requested under §§ 4041.44(e) and 4041.46(e) or, if earlier, at the time the plan administrator decides not to request reconsideration; or

(ii) If reconsideration is requested, upon PBGC issuance of its decision on reconsideration.

(2) Any benefits that were not paid pursuant to paragraph (c) of this section will be due and payable as of the effective date of the PBGC's determination, together with interest from the date (or dates) on which the unpaid amounts were originally due until the date on which they are paid in full at the rate or rates prescribed under § 4022.81(c)(3) of this chapter.

(e) *Effect of subsequent insufficiency.* If the plan administrator makes a finding of subsequent insufficiency for guaranteed benefits pursuant to § 4041.49(b), or the PBGC notifies the plan administrator that it has made a finding of subsequent insufficiency for guaranteed benefits pursuant to § 4041.40(d), the prohibitions in paragraph (b) of this section will apply in accordance with § 4041.49(e).

[62 FR 60428, Nov. 7, 1997, as amended at 63 FR 29355, May 29, 1998]

§ 4041.43 Notice of intent to terminate.

(a) *General rules.* (1) At least 60 days and (except with PBGC approval) no more than 90 days before the proposed termination date, the plan administrator must issue a written notice of intent to terminate to each person who is an affected party as of the proposed termination date.

(2) The plan administrator must issue the notice of intent to terminate to all affected parties other than the PBGC at or before the time he or she files the notice with the PBGC.

(3) The notice to affected parties other than the PBGC must contain all of the information specified in paragraph (b) of this section.

(4) The notice to the PBGC must be filed on PBGC Form 600, Distress Termination, Notice of Intent to Terminate, completed in accordance with the instructions thereto.

(5) In the case of a beneficiary of a deceased participant or an alternate payee, the plan administrator must issue a notice of intent to terminate promptly to any person that becomes an affected party after the proposed termination date and on or before the date a trustee is appointed for the plan pursuant to section 4042(c) of ERISA (or, in the case of a plan that distributes assets pursuant to § 4041.50, the distribution date).

(b) *Contents of notice to affected parties other than the PBGC.* The plan administrator must include in the notice of intent to terminate to each affected party other than the PBGC all of the following information:

(1) The name of the plan and of the contributing sponsor;

(2) The EIN of the contributing sponsor and the PN; if there is no EIN or PN, the notice must so state;

(3) The name, address, and telephone number of the person who may be contacted by an affected party with questions concerning the plan's termination;

(4) A statement that the plan administrator expects to terminate the plan in a distress termination on a specified proposed termination date;

(5) The cessation of accruals information in § 4041.23(b)(4);

(6) A statement as to how an affected party entitled to receive the latest updated summary plan description under section 104(b) of ERISA can obtain it;

(7) A statement of whether plan assets are sufficient to pay all guaranteed benefits or all benefit liabilities;

(8) A brief description of what benefits are guaranteed by the PBGC (e.g., if only a portion of the benefits are guaranteed because of the phase-in rule, this should be explained), and a statement that participants and beneficiaries also may receive a portion of the benefits to which each is entitled under the terms of the plan in excess of guaranteed benefits; and

(9) A statement, if applicable, that benefits may be subject to reduction because of the limitations on the amounts guaranteed by the PBGC or because plan assets are insufficient to pay for full benefits (pursuant to part 4022, subparts B and D, of this chapter) and that payments in excess of the amount guaranteed by the PBGC may be recouped by the PBGC (pursuant to part 4022, subpart E, of this chapter).

(c) *Spin-off/termination transactions.* In the case of a spin-off/termination transaction (as described in § 4041.23(c)), the plan administrator must provide all participants and beneficiaries in the original plan who are also participants or beneficiaries in the ongoing plan (as of the proposed termination date) with a notice describing the transaction no later than the date on which the plan administrator completes the issuance of notices of intent to terminate under this section.

§ 4041.44 PBGC review of notice of intent to terminate.

(a) *General.* When a notice of intent to terminate is filed with it, the PBGC—

(1) Will determine whether the notice was issued in compliance with § 4041.43; and

(2) Will advise the plan administrator of its determination, in accordance with paragraph (b) or (c) of this section, no later than the proposed termination date specified in the notice.

(b) *Tentative finding of compliance.* If the PBGC determines that the issuance of the notice of intent to terminate appears to be in compliance with § 4041.43, it will notify the plan administrator in writing that—

(1) The PBGC has made a tentative determination of compliance;

(2) The distress termination proceeding may continue; and

(3) After reviewing the distress termination notice filed pursuant to § 4041.45, the PBGC will make final, or reverse, this tentative determination.

(c) *Finding of noncompliance.* If the PBGC determines that the issuance of the notice of intent to terminate was not in compliance with § 4041.43 (except for requirements that the PBGC elects to waive under § 4041.41(b)(2)(i) with respect to the notice filed with the PBGC), the PBGC will notify the plan administrator in writing—

(1) That the PBGC has determined that the notice of intent to terminate was not properly issued; and

(2) That the proposed distress termination is null and void and the plan is an ongoing plan.

(d) *Information on need to institute section 4042 proceedings.* The PBGC may require the plan administrator to submit, within 20 days after the plan administrator's receipt of the PBGC's written request (or such other period as may be specified in such written request), any information that the PBGC determines it needs in order to decide whether to institute termination or trusteeship proceedings pursuant to section 4042 of ERISA, whenever—

(1) A notice of intent to terminate indicates that benefits currently in pay status (or that should be in pay status) are not being paid or that this is likely to occur within the 180-day period following the issuance of the notice of intent to terminate;

(2) The PBGC issues a determination under paragraph (c) of this section; or

(3) The PBGC has any reason to believe that it may be necessary or appropriate to institute proceedings under section 4042 of ERISA.

(e) *Reconsideration of finding of noncompliance.* A plan administrator may request reconsideration of the PBGC's determination of noncompliance under paragraph (c) of this section in accordance with the rules prescribed in part 4003, subpart C, of this chapter. Any request for reconsideration automatically stays the effectiveness of the determination until the PBGC issues its decision on reconsideration, but does not stay the time period within which information must be submitted to the PBGC in response to a request under paragraph (d) of this section.

(f) *Notice to affected parties.* Upon a decision by the PBGC affirming a finding of noncompliance or upon the expiration of the period within which the plan administrator may request reconsideration of a finding of noncompliance (or, if earlier, upon the plan administrator's decision not to request reconsideration), the plan administrator must notify the affected parties (and any persons who were provided notice under § 4041.43(e)) in writing that the plan is not going to terminate or, if applicable, that the termination is invalid but that a new notice of intent to terminate is being issued.

§ 4041.45 Distress termination notice.

(a) *General rule.* The plan administrator must file with the PBGC a PBGC Form 601, Distress Termination Notice, Single-Employer Plan Termination, with Schedule EA-D, Distress Termination Enrolled Actuary Certification, that has been completed in accordance with the instructions thereto, on or before the 120th day after the proposed termination date.

(b) *Participant and benefit information*—(1) *Plan insufficient for guaranteed benefits.* Unless the enrolled actuary certifies, in the Schedule EA-D filed in accordance with paragraph (a) of this section, that the plan is sufficient either for guaranteed benefits or for benefit liabilities, the plan administrator must file with the PBGC the participant and benefit information described in PBGC Form 601 and the instructions thereto by the later of—

(i) 120 days after the proposed termination date, or

(ii) 30 days after receipt of the PBGC's determination, pursuant to § 4041.46(b), that the requirements for a distress termination have been satisfied.

(2) *Plan sufficient for guaranteed benefits or benefit liabilities.* If the enrolled actuary certifies that the plan is sufficient either for guaranteed benefits or for benefit liabilities, the plan administrator need not submit the participant and benefit information described in PBGC Form 601 and the instructions thereto unless requested to do so pursuant to paragraph (c) of this section.

(3) *Effect of failure to provide information.* The PBGC may void the distress termination if the plan administrator fails to provide complete participant and benefit information in accordance with this section.

(c) *Additional information.* The PBGC may in any case require the submission of any additional information that it needs to make the determinations that it is required to make under this part or to pay benefits pursuant to section 4061 or 4022(c) of ERISA. The plan administrator must submit any information requested under this paragraph

within 30 days after receiving the PBGC's written request (or such other period as may be specified in such written request).

§ 4041.46 PBGC determination of compliance with requirements for distress termination.

(a) *General.* Based on the information contained and submitted with the PBGC Form 600 and the PBGC Form 601, with Schedule EA-D, and on any information submitted by an affected party or otherwise obtained by the PBGC, the PBGC will determine whether the requirements for a distress termination set forth in § 4041.41(c) have been met and will notify the plan administrator in writing of its determination, in accordance with paragraph (b) or (c) of this section.

(b) *Qualifying termination.* If the PBGC determines that all of the requirements of § 4041.41(c) have been satisfied, it will so advise the plan administrator and will also advise the plan administrator of whether participant and benefit information must be submitted in accordance with § 4041.45(b).

(c) *Non-qualifying termination.* (1) Except as provided in paragraph (c)(2) of this section, if the PBGC determines that any of the requirements of § 4041.41 have not been met, it will notify the plan administrator of its determination, the basis therefor, and the effect thereof (as provided in § 4041.41(b)).

(2) If the only basis for the PBGC's determination described in paragraph (c)(1) of this section is that the distress termination notice is incomplete, the PBGC will advise the plan administrator of the missing item(s) of information and that the information must be filed with the PBGC no later than the 120th day after the proposed termination date or the 30th day after the date of the PBGC's notice of its determination, whichever is later.

(d) *Reconsideration of determination of non-qualification.* A plan administrator may request reconsideration of the PBGC's determination under paragraph (c)(1) of this section in accordance with the rules prescribed in part 4003, subpart C, of this chapter. The filing of a request for reconsideration automatically stays the effectiveness of the determination until the PBGC issues its decision on reconsideration.

(e) *Notice to affected parties.* Upon a decision by the PBGC affirming a determination of non-qualification or upon the expiration of the period within which the plan administrator may request reconsideration of a determination of non-qualification (or, if earlier, upon the plan administrator's decision not to request reconsideration), the plan administrator must notify the affected parties (and any persons who were provided notice under § 4041.43(e)) in writing that the plan is not going to terminate or, if applicable, that the termination is invalid but that a new notice of intent to terminate is being issued.

§ 4041.47 PBGC determination of plan sufficiency/insufficiency.

(a) *General.* Upon receipt of participant and benefit information filed pursuant to § 4041.45 (b)(1) or (c), the PBGC will determine the degree to which the plan is sufficient and notify the plan administrator in writing of its determination in accordance with paragraph (b) or (c) of this section.

(b) *Insufficiency for guaranteed benefits.* If the PBGC finds that it is unable to determine that a plan is sufficient for guaranteed benefits, it will issue a ''notice of inability to determine sufficiency'' notifying the plan administrator of this finding and advising the plan administrator that—

(1) The plan administrator must continue to administer the plan under the restrictions imposed by § 4041.42; and

(2) The termination will be completed under section 4042 of ERISA.

(c) *Sufficiency for guaranteed benefits or benefit liabilities.* If the PBGC determines that a plan is sufficient for guaranteed benefits but not for benefit liabilities or is sufficient for benefit liabilities, the PBGC will issue to the plan administrator a distribution notice advising the plan administrator—

(1) To issue notices of benefit distribution in accordance with § 4041.48;

(2) To close out the plan in accordance with § 4041.50;

(3) To file a timely post-distribution certification with the PBGC in accordance with § 4041.50(b); and

(4) That either the plan administrator or the contributing sponsor must preserve and maintain plan records in accordance with § 4041.5.

(d) *Alternative treatment of majority owner's benefit.* A majority owner may elect to forgo receipt of all or part of his or her plan benefits in connection with a distress termination. Any such alternative treatment—

(1) Is valid only if the conditions in § 4041.21(b)(2) (i) through (iv) are met (except that, in the case of a plan that does not distribute assets pursuant to § 4041.50, the majority owner may make the election and the spouse may consent any time on or after the date of issuance of the first notice of intent to terminate); and—

(2) Is subject to the PBGC's approval if the election—

(i) Is made after the termination date; and

(ii) Would result in the PBGC determining that the plan is sufficient for guaranteed benefits under paragraph (c).

§ 4041.48 Sufficient plans; notice requirements.

(a) *Notices of benefit distribution.* When a distribution notice is issued by the PBGC pursuant to § 4041.47, the plan administrator must issue notices of benefit distribution in accordance with the rules regarding notices of plan benefits in § 4041.24, except that—

(1) The deadline for issuing the notices of benefit distribution is the 60th day after receipt of the distribution notice; and

(2) With respect to the information described in § 4041.24 (b) through (e), the term ''plan benefits'' is replaced with ''title IV benefits'' and the term ''proposed termination date'' is replaced with ''termination date''.

(b) *Certification to PBGC.* No later than 15 days after the date on which the plan administrator completes the issuance of the notices of benefit distribution, the plan administrator must file with the PBGC a certification that the notices were so issued in accordance with the requirements of this section.

(c) *Notice of annuity information*—(1) *In general.* Unless all title IV benefits will be distributed in the form of nonconsensual lump sums, the plan administrator must provide a notice of annuity information to each affected party other than—

(i) An affected party whose title IV benefits will be distributed in the form of a nonconsensual lump sum; and

(ii) The PBGC.

(2) *Spin-off/termination transactions.* The plan administrator must provide the information in paragraph (c)(4) of this section to a person entitled to notice under § 4041.43(c), at the same time and in the same manner as required for an affected party described in paragraph (c)(1) of this section.

(3) *Selection of different insurer.* A plan administrator that decides to select a different insurer after having previously notified the affected party of the identity of insurer(s) under this paragraph must provide another notice of annuity information.

(4) *Content of notice.* The notice must include—

(i) The identity-of-insurer information in § 4041.27(b)(1);

(ii) The information regarding change in identity of insurer(s) in § 4041.27(b)(2); and

(iii) Unless the state guaranty coverage information in § 4041.27(b)(3) was previously provided to the affected party, such information and the extinguishment-of-guaranty information in § 4041.23(b)(9) (replacing the term ''plan benefits'' with ''title IV benefits'').

(5) *Deadline for notice.* The plan administrator must issue the notice of annuity information to each affected party by the deadline in § 4041.27(d)(1).

(d) *Request for IRS determination letter.* To qualify for the distribution deadline in § 4041.28(a)(1)(ii) (as modified and made applicable by § 4041.50(c)), the plan administrator must submit to the IRS a valid request for a determination of the plan's qualification status upon termination (''determination letter'') by the day on which the plan administrator completes the issuance of the notices of benefit distribution.

§ 4041.49 Verification of plan sufficiency prior to closeout.

(a) *General rule.* Before distributing plan assets pursuant to a closeout under § 4041.50, the plan administrator must verify whether the plan's assets

are still sufficient to provide for benefits at the level determined by the PBGC, *i.e.*, guaranteed benefits or benefit liabilities. If the plan administrator finds that the plan is no longer able to provide for benefits at the level determined by the PBGC, then paragraph (b) or (c) of this section, as appropriate, will apply.

(b) *Subsequent insufficiency for guaranteed benefits.* When a plan administrator finds that a plan is no longer sufficient for guaranteed benefits, the plan administrator must promptly notify the PBGC in writing of that fact and may take no further action to implement the plan termination, pending the PBGC's determination and notice pursuant to paragraph (b)(1) or (b)(2) of this section.

(1) *PBGC concurrence with finding.* If the PBGC concurs with the plan administrator's finding, the distribution notice will be void, and the PBGC will—

(i) Issue the plan administrator a notice of inability to determine sufficiency in accordance with § 4041.47(b); and

(ii) Require the plan administrator to submit a new valuation, certified to by an enrolled actuary, of the benefit liabilities and guaranteed benefits under the plan, valued in accordance with §§ 4044.41 through 4044.57 of this chapter as of the date of the plan administrator's notice to the PBGC.

(2) *PBGC non-concurrence with finding.* If the PBGC does not concur with the plan administrator's finding, it will so notify the plan administrator in writing, and the distribution notice will remain in effect.

(c) *Subsequent insufficiency for benefit liabilities.* When a plan administrator finds that a plan is sufficient for guaranteed benefits but is no longer sufficient for benefit liabilities, the plan administrator must immediately notify the PBGC in writing of this fact, but must continue with the distribution of assets in accordance with § 4041.50.

(d) *Finding by PBGC of subsequent insufficiency.* In any case in which the PBGC finds on its own initiative that a subsequent insufficiency for guaranteed benefits has occurred, paragraph (b)(1) of this section will apply, except that the guaranteed benefits must be revalued as of the date of the PBGC's finding.

(e) *Restrictions upon finding of subsequent insufficiency.* When the plan administrator makes the finding described in paragraph (b) of this section or receives notice that the PBGC has made the finding described in paragraph (d) of this section, the plan administrator is (except to the extent the PBGC otherwise directs) subject to the prohibitions in § 4041.42.

§ 4041.50 Closeout of plan.

If a plan administrator receives a distribution notice from the PBGC pursuant to § 4041.47 and neither the plan administrator nor the PBGC makes the finding described in § 4041.49(b) or (d), the plan administrator must distribute plan assets in accordance with § 4041.28 and file a post-distribution certification in accordance with § 4041.29, except that—

(a) The term ''plan benefits'' is replaced with ''title IV benefits'';

(b) For purposes of applying the distribution deadline in § 4041.28(a)(1)(i), the phrase ''after the expiration of the PBGC's 60-day (or extended) review period under § 4041.26(a)'' is replaced with ''the day on which the plan administrator completes the issuance of the notices of benefit distribution pursuant to § 4041.48(a)''; and

(c) For purposes of applying the distribution deadline in § 4041.28(a)(1)(ii), the phrase ''the requirements of § 4041.25(c)'' is replaced with ''the requirements of § 4041.48(d)''.

§ 4041.51 Disclosure of information by plan administrator in distress termination.

(a) *Request for Information*—(1) *In general.* If a notice of intent to terminate under § 4041.43 is issued with respect to a plan, an affected party may make a request to the plan administrator for information submitted to PBGC under sections 4041(a)(2) and 4041(c)(2) of ERISA and §§ 4041.43 and 4041.45.

(2) *Requirements.* A request under paragraph (a) of this section must:

(i) Be in writing to the plan administrator;

(ii) State the name of the plan and that the request is for information submitted to PBGC with respect to the application for a distress termination of the plan;

(iii) State the name of the person making the request for information and such person's relationship to the plan (e.g., plan participant), and that such relationship meets the definition of affected party under §4001.2 of this chapter; and

(iv) Be signed by the person making the request.

(b) *Response by Plan Administrator*—(1) *Information*. The information that a plan administrator must provide in response to a request under paragraph (a) of this section includes PBGC Form 600, and any information submitted to PBGC pursuant to section 4041(c)(2) of ERISA and §4041.45.

(2) *Timing of response*. A plan administrator that receives a request under paragraph (a) of this section must provide the information requested not later than the 15th business day (as defined in §4000.22 of this chapter) after receipt of the request.

(3) *Deferral of due date*. If, at the time the plan administrator receives a request under paragraph (a) of this section, the plan administrator has not filed a PBGC Form 600, the plan administrator must provide the information requested under paragraph (a) not later than the 15th business day (as defined in §4000.22 of this chapter) after a PBGC Form 600 is filed with PBGC.

(4) *Supplemental responses*. If, at any time after the later of the receipt of a request under paragraph (a) of this section, or the filing of PBGC Form 600, the plan administrator submits additional information to PBGC with respect to the plan termination under section 4041(c)(2) of ERISA and §4041.45, the plan administrator must, not later than the 15th business day (as defined in §4000.22 of this chapter) after each additional submission, provide the additional information to any affected party that has made a request under paragraph (a) of this section.

(5) *Confidential information*. (i) In responding to a request under paragraph (a) of this section, the plan administrator shall not provide information that may, directly or indirectly, identify an individual participant or beneficiary of the plan.

(ii) A plan administrator that has received a request under paragraph (a) of this section may seek a court order under which confidential information described in section 552(b) of title 5, United States Code—

(A) Will be disclosed only to authorized representatives (within the meaning of section 4041(c)(2)(D)(iv) of ERISA) that agree to ensure the confidentiality of such information, and,

(B) Will not be disclosed to other affected parties.

(6) *Reasonable fees*. Under section 4041(c)(2)(D)(iii)(II) of ERISA, a plan administrator may charge a reasonable fee for any information provided under this section in other than electronic form.

[73 FR 68337, Nov. 18, 2008]

PART 4041A—TERMINATION OF MULTIEMPLOYER PLANS

Subpart A—General Provisions

Sec.
4041A.1 Purpose and scope.
4041A.2 Definitions.
4041A.3 Method and date of filing; where to file; computation of time; issuances to third parties.

Subpart B—Notice of Termination

4041A.11 Requirement of notice.
4041A.12 Contents of notice.

Subpart C—Plan Sponsor Duties

4041A.21 General rule.
4041A.22 Payment of benefits.
4041A.23 Imposition and collection of withdrawal liability.
4041A.24 Plan valuations and monitoring.
4041A.25 Periodic determinations of plan solvency.
4041A.26 Financial assistance.
4041A.27 PBGC approval to pay benefits not otherwise permitted.

Subpart D—Closeout of Sufficient Plans

4041A.41 General rule.
4041A.42 Method of distribution.
4041A.43 Benefit forms.
4041A.44 Cessation of withdrawal liability.

AUTHORITY: 29 U.S.C. 1302(b)(3), 1341a, 1441.

SOURCE: 61 FR 34052, July 1, 1996, unless otherwise noted.

Subpart A—General Provisions

§ 4041A.1 Purpose and scope.

The purpose of this part is to establish rules for notifying the PBGC of the termination of a multiemployer plan and rules for the administration of multiemployer plans that have terminated by mass withdrawal. Subpart B prescribes the contents of and procedures for filing a Notice of Termination for a multiemployer plan. Subpart C prescribes basic duties of plan sponsors of mass-withdrawal-terminated plans. (Other duties are prescribed in part 4281 of this chapter.) Subpart D contains procedures for closing out sufficient plans. This part applies to terminated multiemployer plans covered by title IV of ERISA but, in the case of subparts C and D, only to plans terminated by mass withdrawal under section 4041A(a)(2) of ERISA (including plans created by partition pursuant to section 4233 of ERISA).

§ 4041A.2 Definitions.

The following terms are defined in § 4001.1 of this chapter: annuity, ERISA, insurer, IRS, mass withdrawal, multiemployer plan, nonforfeitable benefit, PBGC, plan, and plan year.

In addition, for purposes of this part:

Available resources means, for a plan year, available resources as described in section 4245(b)(3) of ERISA.

Benefits subject to reduction means those benefits accrued under plan amendments (or plans) adopted after March 26, 1980, or under collective bargaining agreements entered into after March 26, 1980, that are not eligible for the PBGC's guarantee under section 4022A(b) of ERISA.

Financial assistance means financial assistance from the PBGC under section 4261 of ERISA.

Insolvency benefit level means the greater of the resource benefit level or the benefit level guaranteed by the PBGC for each participant and beneficiary in pay status.

Insolvency year means insolvency year as described in section 4245(b)(4) of ERISA.

Insolvent means that a plan is unable to pay benefits when due during the plan year. A plan terminated by mass withdrawal is not insolvent unless it has been amended to eliminate all benefits that are subject to reduction under section 4281(c) of ERISA, or, in the absence of an amendment, no benefits under the plan are subject to reduction under section 4281(c) of ERISA.

Nonguaranteed benefits means those benefits that are eligible for the PBGC's guarantee under section 4022A(b) of ERISA, but exceed the guarantee limits under section 4022A(c).

Resource benefit level means resource benefit level as described in section 4245(b)(2) of ERISA.

[61 FR 34052, July 1, 1996; 61 FR 36626, July 12, 1996]

§ 4041A.3 Method and date of filing; where to file; computation of time; issuances to third parties.

(a) *Method and date of filing.* The PBGC applies the rules in subpart A of part 4000 of this chapter to determine permissible methods of filing with the PBGC under this part. The PBGC applies the rules in subpart C of part 4000 of this chapter to determine the date that a submission under this part was filed with the PBGC.

(b) *Where to file.* See § 4000.4 of this chapter for information on where to file.

(c) *Computation of time.* The PBGC applies the rules in subpart D of part 4000 of this chapter to compute any time period for filing or issuance under this part.

(d) *Method and date of issuance.* The PBGC applies the rules in subpart B of part 4000 of this chapter to determine permissible methods of issuance under this part. The PBGC applies the rules in subpart C of part 4000 of this chapter to determine the date that an issuance under this part was provided.

[68 FR 61354, Oct. 28, 2003]

Subpart B—Notice of Termination

§ 4041A.11 Requirement of notice.

(a) *General.* A Notice of Termination shall be filed with the PBGC by a multiemployer plan when the plan has terminated as described in section 4041A(a) of ERISA.

(b) *Who shall file.* The plan sponsor or a duly authorized representative acting

on behalf of the plan sponsor shall sign and file the Notice.

(c) *When to file.* (1) For a termination pursuant to a plan amendment, the Notice shall be filed with the PBGC within thirty days after the amendment is adopted or effective, whichever is later.

(2) For a termination that results from a mass withdrawal, the Notice shall be filed with the PBGC within thirty days after the last employer withdrew from the plan or thirty days after the first day of the first plan year for which no employer contributions were required under the plan, whichever is earlier.

(Approved by the Office of Management and Budget under control number 1212–0020)

§4041A.12 Contents of notice.

(a) *Information to be contained in notice.* Except to the extent provided in paragraph (d), each Notice shall contain:

(1) The name of the plan;

(2) The name, address and telephone number of the plan sponsor and of the plan sponsor's duly authorized representative, if any;

(3) The name, address, and telephone number of the person that will administer the plan after the date of termination, if other than the plan sponsor;

(4) A copy of the plan's most recent Form 5500 (Annual Report Form), including schedules; and

(5) The date of termination of the plan.

(b) *Information to be contained in a notice involving a mass withdrawal.* In addition to the information contained in paragraph (a) and except as provided in paragraph (d), the following information shall be contained in a Notice filed by a plan that has terminated by mass withdrawal:

(1) A copy of the plan document in effect 5 years prior to the date of termination and copies of any amendments adopted after that date.

(2) A copy (or copies) of the trust agreement (or agreements), if any, authorizing the plan sponsor to control and manage the operation and administration of the plan.

(3) A copy of the most recent actuarial statement and opinion (if any) relating to the plan.

(4) A statement of any material change in the assets or liabilities of the plan occurring after either the date of the actuarial statement referred to in item (5) or the date of the plan's Form 5500 submitted as part of the Notice.

(5) Complete copies of any letters of determination issued by the IRS relating to the establishment of the plan, any letters of determination relating to the disqualification of the plan and any subsequent requalification, and any letters of determination relating to the termination of the plan.

(6) A statement whether the plan assets will be sufficient to pay all benefits in pay status during the 12-month period following the date of termination.

(7) If plan assets on hand are sufficient to satisfy all nonforfeitable benefits under the plan, and if the plan sponsor intends to distribute such assets, a brief description of the proposed method of distributing the plan assets.

(8) If plan assets on hand are not sufficient to satisfy all nonforfeitable benefits under the plan, the name and address of any employer who contributed to the plan within 3 plan years prior to the date of termination.

(c) *Certification.* As part of the Notice, the plan sponsor or duly authorized representatives shall certify that all information and documents submitted pursuant to this section are true and correct to the best of the plan sponsor's or representative's knowledge and belief.

(d) *Avoiding duplication.* Information described in paragraphs (a) and (b) of this section need not be supplied if it duplicates information contained in Form 5500, or a schedule thereof, that a plan submits as part of the Notice.

(e) *Additional information.* In addition to the information described in paragraphs (a) and (b) of this section, the PBGC may require the submission of any other information which the PBGC determines is necessary for review of a Notice of Termination.

Subpart C—Plan Sponsor Duties

§4041A.21 General rule.

The plan sponsor of a multiemployer plan that terminates by mass withdrawal shall continue to administer

the plan in accordance with applicable statutory provisions, regulations, and plan provisions until a trustee is appointed under section 4042 of ERISA or until plan assets are distributed in accordance with subpart D of this part. In addition, the plan sponsor shall be responsible for the specific duties described in this subpart.

§ 4041A.22 Payment of benefits.

(a) Except as provided in paragraph (b), the plan sponsor shall pay any benefit attributable to employer contributions, other than a death benefit, only in the form of an annuity.

(b) The plan sponsor may pay a benefit in a form other than an annuity if—

(1) The plan distributes plan assets in accordance with subpart D of this part;

(2) The PBGC approves the payment of the benefit in an alternative form pursuant to § 4041A.27; or

(3) The value of the entire nonforfeitable benefit does not exceed $1,750.

(c) Except to the extent provided in the next sentence, the plan sponsor shall not pay benefits in excess of the amount that is nonforfeitable under the plan as of the date of termination, unless authorized to do so by the PBGC pursuant to § 4041A.27. Subject to the restriction stated in paragraph (d) of this section, however, the plan sponsor may pay a qualified preretirement survivor annuity with respect to a participant who died after the date of termination.

(d) The payment of benefits subject to reduction shall be discontinued to the extent provided in § 4281.31 if the plan sponsor determines, in accordance with § 4041A.24, that the plan's assets are insufficient to provide all nonforfeitable benefits.

(e) The plan sponsor shall, to the extent provided in § 4281.41, suspend the payment of nonguaranteed benefits if the plan sponsor determines, in accordance with § 4041A.25, that the plan is insolvent.

(f) The plan sponsor shall, to the extent required by § 4281.42, make retroactive payments of suspended benefits if it determines under that section that the level of the plan's available resources requires such payments.

§ 4041A.23 Imposition and collection of withdrawal liability.

Until plan assets are distributed in accordance with subpart D of this part, or until the end of the plan year as of which the PBGC determines that plan assets (exclusive of claims for withdrawal liability) are sufficient to satisfy all nonforfeitable benefits under the plan, the plan sponsor shall be responsible for determining, imposing and collecting withdrawal liability (including the liability arising as a result of the mass withdrawal), in accordance with part 4219, subpart C, of this chapter and sections 4201 through 4225 of ERISA.

§ 4041A.24 Plan valuations and monitoring.

(a) *Annual valuation.* The plan sponsor shall determine or cause to be determined in writing the value of nonforfeitable benefits under the plan and the value of the plan's assets, in accordance with part 4281, subpart B. This valuation shall be done not later than 150 days after the end of the plan year in which the plan terminates and each plan year thereafter except as provided in this paragraph. A plan year for which a valuation is performed is called a valuation year.

(1) If the value of nonforfeitable benefits for the plan is $25 million or less as determined for a valuation year, the plan sponsor may use the valuation for the next two plan years and, subject to paragraphs (a)(2) and (3) of this section, perform a new valuation pursuant to this paragraph for the third plan year after the previous valuation year.

(2) No valuation is required for a plan year for which the plan receives financial assistance from PBGC under section 4261 of ERISA.

(3) No valuation is required for the plan year in which the plan is closed out in accordance with subpart D of this part.

(b) *Plan monitoring.* Upon receipt of the valuation described in paragraph (a) of this section, the plan sponsor shall determine whether the value of nonforfeitable benefits exceeds the value of the plan's assets, including claims for withdrawal liability owed to the plan. When benefits do exceed assets, the plan sponsor shall—

(1) If the plan provides benefits subject to reduction, amend the plan to reduce those benefits in accordance with the procedures in part 4281, subpart C, of this chapter to the extent necessary to ensure that the plan's assets are sufficient to discharge when due all of the plan's obligations with respect to nonforfeitable benefits; or

(2) If the plan provides no benefits subject to reduction, make periodic determinations of plan solvency in accordance with §4041A.25.

(c) *Notices of benefit reductions.* The plan sponsor of a plan that has been amended to reduce benefits shall provide participants and beneficiaries and the PBGC notice of the benefit reduction in accordance with §4281.32.

[61 FR 34052, July 1, 1996, as amended at 79 FR 30462, May 28, 2014]

§4041A.25 Periodic determinations of plan solvency.

(a) *Annual insolvency determination.* The plan sponsor of a plan that has been amended to eliminate all benefits that are subject to reduction under section 4281(c) of ERISA shall determine in writing whether the plan is expected to be insolvent for the first plan year beginning after the effective date of the amendment and for each plan year thereafter. In the event that a plan adopts more than one amendment reducing benefits under section 4281(c) of ERISA, the initial determination shall be made for the first plan year beginning after the effective date of the amendment that effects the elimination of all such benefits, and a determination shall be made for each plan year thereafter. The plan sponsor of a plan under which no benefits are subject to reduction under section 4281(c) of ERISA as of the date the plan terminated shall determine in writing whether the plan is expected to be insolvent. The initial determination shall be made for the second plan year beginning after the first plan year for which it is determined under section 4281(b) of ERISA that the value of nonforfeitable benefits under the plan exceeds the value of the plan's assets. The plan sponsor shall also make a solvency determination for each plan year thereafter. A determination required under this paragraph shall be made no later than six months before the beginning of the plan year to which it applies.

(b) *Other determination of insolvency.* Whether or not a prior determination of plan solvency has been made under paragraph (a) of this section (or under section 4245 of ERISA), a plan sponsor that has reason to believe, taking into account the plan's recent and anticipated financial experience, that the plan is or may be insolvent for the current or next plan year shall determine in writing whether the plan is expected to be insolvent for that plan year.

(c) *Benefit suspensions.* If the plan sponsor determines that the plan is, or is expected to be, insolvent for a plan year, it shall suspend benefits in accordance with §4281.41.

(d) *Insolvency notices.* If the plan sponsor determines that the plan is, or is expected to be, insolvent for a plan year, it shall issue notices of insolvency or annual updates and notices of insolvency benefit level of the PBGC and to plan participants and beneficiaries in accordance with part 4281, subpart D.

§4041A.26 Financial assistance.

A plan sponsor that determines a resource benefit level under section 4245(b)(2) of ERISA that is below the level of guaranteed benefits or that determines that the plan will be unable to pay guaranteed benefits for any month during an insolvency year shall apply for financial assistance from the PBGC in accordance with §4281.47.

§4041A.27 PBGC approval to pay benefits not otherwise permitted.

Upon written application by the plan sponsor, the PBGC may authorize the plan to pay benefits other than nonforfeitable benefits or to pay benefits valued at more than $1,750 in a form other than an annuity. The PBGC will approve such payments if it determines that the plan sponsor has demonstrated that the payments are not adverse to the interests of the plan's participants and beneficiaries generally and do not unreasonably increase the PBGC's risk of loss with respect to the plan.

Subpart D—Closeout of Sufficient Plans

§ 4041A.41 General rule.

If a plan's assets, excluding any claim of the plan for unpaid withdrawal liability, are sufficient to satisfy all obligations for nonforfeitable benefits provided under the plan, the plan sponsor may close out the plan in accordance with this subpart by distributing plan assets in full satisfaction of all nonforfeitable benefits under the plan.

§ 4041A.42 Method of distribution.

The plan sponsor shall distribute plan assets by purchasing from an insurer contracts to provide all benefits required by § 4041A.43 to be provided in annuity form and by paying in a lump sum (or other alternative elected by the participant) all other benefits.

§ 4041A.43 Benefit forms.

(a) *General rule.* Except as provided in paragraph (b) of this section, the sponsor of a plan that is closed out shall provide for the payment of any benefit attributable to employer contributions only in the form of an annuity.

(b) *Exceptions.* The plan sponsor may pay a benefit attributable to employer contributions in a form other than an annuity if:

(1) The present value of the participant's entire nonforfeitable benefit, determined using the interest assumption under §§ 4044.41 through 4044.57, does not exceed $5,000.

(2) The payment is for death benefits provided under the plan.

(3) The participant elects an alternative form of distribution under paragraph (c) of this section.

(c) *Alternative forms of distribution.* The plan sponsor may allow participants to elect alternative forms of distribution in accordance with this paragraph. When a form of distribution is offered as an alternative to the normal form, the plan sponsor shall notify each participant, in writing, of the form and estimated amount of the participant's normal form of distribution. The notification shall also describe any risks attendant to the alternative form. Participants' elections of alternative forms shall be in writing.

[61 FR 34052, July 1, 1996, as amended at 63 FR 38306, July 16, 1998]

§ 4041A.44 Cessation of withdrawal liability.

The obligation of an employer to make payments of initial withdrawal liability and mass withdrawal liability shall cease on the date on which the plan's assets are distributed in full satisfaction of all nonforfeitable benefits provided by the plan.

PART 4042—SINGLE-EMPLOYER PLAN TERMINATION INITIATED BY PBGC

Subpart A—General Provisions

Sec.
4042.1 Purpose and scope.
4042.2 Definitions.
4042.3 Issuance rules.

Subpart B [Reserved]

Subpart C—Disclosure

4042.4 Disclosure of information by plan administrator or plan sponsor.
4042.5 Disclosure of administrative record by PBGC.

AUTHORITY: 29 U.S.C. 1302(b)(3), 1342.

SOURCE: 73 68338, Nov. 18, 2008, unless otherwise noted.

Subpart A—General Provisions

§ 4042.1 Purpose and scope.

This part sets forth rules and procedures relating to single-employer plan terminations initiated by PBGC under section 4042 of ERISA.

§ 4042.2 Definitions.

The following terms used in this part are defined in § 4001.2 of this chapter: *Affected party*, *ERISA*, *PBGC*, and *plan administrator*.

§ 4042.3 Issuance rules.

PBGC applies the rules in subpart B of part 4000 of this chapter to determine permissible methods of issuance under this part. PBGC applies the rules in subpart C of part 4000 of this chapter

to determine the date that an issuance under this part was provided.

Subpart B [Reserved]

Subpart C—Disclosure

§ 4042.4 Disclosure of information by plan administrator or plan sponsor.

(a) *Request for Information*—(1) *In general*. Beginning on the third business day (as defined in § 4000.22 of this chapter) after PBGC has issued a notice under section 4042 of ERISA that a plan should be terminated, an affected party may make a request to the plan sponsor or the plan administrator (or both) for any information that such plan administrator or plan sponsor has submitted to PBGC in connection with the plan termination.

(2) *Requirements*. A request under paragraph (a) of this section must:

(i) Be in writing to the plan administrator or plan sponsor;

(ii) State the name of the plan and that the request is for information submitted to PBGC in connection with the plan termination;

(iii) State the name of the person making the request for information and such person's relationship to the plan (e.g., plan participant), and that such relationship meets the definition of affected party under § 4001.2 of this chapter; and

(iv) Be signed by the person making the request.

(b) *Response by Plan Administrator or Plan Sponsor*—(1) *Timing of response*. A plan administrator or plan sponsor that receives a request under paragraph (a) of this section must provide the information requested not later than the 15th business day (as defined in § 4000.22 of this chapter) after receipt of the request.

(2) *Supplemental responses*. If, at any time after receipt of a request under paragraph (a), the plan administrator or plan sponsor submits additional information to PBGC in connection with the plan termination, the plan administrator or plan sponsor must provide such additional information to any affected party that has made a request under paragraph (a), not later than the 15th business day (as defined in § 4000.22 of this chapter) after the information is submitted to PBGC.

(3) *Confidential information*. (i) In responding to a request under paragraph (a) of this section, the plan administrator or plan sponsor shall not provide information that may, directly or indirectly, identify an individual participant or beneficiary.

(ii) A plan administrator or plan sponsor that has received a request under paragraph (a) of this section may seek a court order under which confidential information described in section 552(b) of title 5, United States Code—

(A) Will be disclosed only to authorized representatives (within the meaning of section 4041(c)(2)(D)(iv) of ERISA) that agree, to ensure the confidentiality of such information, and

(B) Will not be disclosed to other affected parties.

(4) *Reasonable fees*. Under section 4042(c)(3)(D)(ii) of ERISA, a plan administrator or plan sponsor may charge a reasonable fee for any information provided under this section in other than electronic form.

§ 4042.5 Disclosure of administrative record by PBGC.

(a) *Request for Administrative Record*—(1) *In general*. Beginning on the third business day (as defined in § 4000.22 of this chapter) after PBGC has issued a notice under section 4042 of ERISA that a plan should be terminated, an affected party with respect to the plan may make a request to PBGC for the administrative record of PBGC's determination that the plan should be terminated.

(2) *Requirements*. A request under paragraph (a) of this section must:

(i) Be in writing;

(ii) State the name of the plan and that the request is for the administrative record with respect to a notice issued by PBGC under section 4042 of ERISA that a plan should be terminated;

(iii) State the name of the person making the request, the person's relationship to the plan (e.g., plan participant), and that such relationship meets the definition of affected party under § 4001.2 of this chapter; and

(iv) Be signed by the person making the request.

(3) A request under paragraph (a) of this section must be sent to PBGC's Disclosure Officer at the address provided on PBGC's Web site. To expedite processing, the request should be prominently identified as an ''Administrative Record Request.''

(b) *PBGC Response to Request for Administrative Record*—(1) *Notification of plan administrator and plan sponsor.* Upon receipt of a request under paragraph (a) of this section, PBGC will promptly notify the plan administrator and plan sponsor that it has received a request for the administrative record, and the date by which PBGC will provide the information to the affected party that made the request.

(2) *Confidential information.* (i) In responding to a request under paragraph (a) of this section, PBGC will not disclose any portions of the administrative record that are prohibited from disclosure under the Privacy Act, 5 U.S.C. 552a.

(ii) A plan administrator or plan sponsor that has received notification pursuant to paragraph (b)(1) of this section may seek a court order under which those portions of the administrative record that contain confidential information described in section 552(b) of title 5, United States Code—

(A) Will be disclosed only to authorized representatives (within the meaning of section 4041(c)(2)(D)(iv) of ERISA) that agree to ensure the confidentiality of such information, and

(B) Will not be disclosed to other affected parties.

(iii) If, before the 15th business day (as defined in § 4000.22 of this chapter) after PBGC has received a request under paragraph (a), PBGC receives a court order as described in paragraph (b)(2)(ii) of this section, PBGC will disclose those portions of the administrative record that contain confidential information described in section 552(b) of title 5, United States Code, only as provided in the order.

(3) *Timing of response.* PBGC will send the administrative record to the affected party that made the request not later than the 15th business day (as defined in § 4000.22 of this chapter) after it receives the request.

(4) *Form and manner.* PBGC will provide the administrative record using measures (including electronic measures) reasonably calculated to ensure actual receipt of the material by the intended recipient.

PART 4043—REPORTABLE EVENTS AND CERTAIN OTHER NOTIFICATION REQUIREMENTS

Subpart A—General Provisions

Sec.
4043.1 Purpose and scope.
4043.2 Definitions.
4043.3 Requirement of notice.
4043.4 Waivers and extensions.
4043.5 How and where to file.
4043.6 Date of filing.
4043.7 Computation of time.
4043.8 Confidentiality.

Subpart B—Post-Event Notice of Reportable Events

4043.20 Post-Event filing obligation.
4043.21 Tax disqualification and title I noncompliance.
4043.22 Amendment decreasing benefits payable.
4043.23 Active participant reduction.
4043.24 Termination or partial termination.
4043.25 Failure to make required minimum funding payment.
4043.26 Inability to pay benefits when due.
4043.27 Distribution to a substantial owner.
4043.28 Plan merger, consolidation, or transfer.
4043.29 Change in contributing sponsor or controlled group.
4043.30 Liquidation.
4043.31 Extraordinary dividend or stock redemption.
4043.32 Transfer of benefit liabilities.
4043.33 Application for minimum funding waiver.
4043.34 Loan default.
4043.35 Bankruptcy or similar settlement.

Subpart C—Advance Notice of Reportable Events

4043.61 Advance reporting filing obligation.
4043.62 Change in contributing sponsor or controlled group.
4043.63 Liquidation.
4043.64 Extraordinary dividend or stock redemption.
4043.65 Transfer of benefit liabilities.
4043.66 Application for minimum funding waiver.
4043.67 Loan default.
4043.68 Bankruptcy or similar settlement.

Subpart D—Notice of Failure To Make Required Contributions

4043.81 PBGC Form 200, notice of failure to make required contributions; supplementary information.

AUTHORITY: 29 U.S.C. 1082(f), 1302(b)(3), 1343.

SOURCE: 61 FR 63989, Dec. 2, 1996, unless otherwise noted.

Subpart A—General Provisions

§ 4043.1 Purpose and scope.

This part prescribes the requirements for notifying the PBGC of a reportable event under section 4043 of ERISA or of a failure to make certain required contributions under section 302(f)(4) of ERISA or section 412(n)(4) of the Code. Subpart A contains definitions and general rules. Subpart B contains rules for post-event notice of a reportable event. Subpart C contains rules for advance notice of a reportable event. Subpart D contains rules for notifying the PBGC of a failure to make certain required contributions.

§ 4043.2 Definitions.

The following terms are defined in § 4001.2 of this chapter: Code, contributing sponsor, controlled group, ERISA, fair market value, irrevocable commitment, multiemployer plan, notice of intent to terminate, PBGC, person, plan, plan administrator, proposed termination date, single-employer plan, and substantial owner.

In addition, for purposes of this part:

De minimis 10-percent segment means, in connection with a plan's controlled group, one or more entities that in the aggregate have for a fiscal year—

(1) Revenue not exceeding 10 percent of the controlled group's revenue;

(2) Annual operating income not exceeding the greatest of—

(i) 10 percent of the controlled group's annual operating income;

(ii) 5 percent of the controlled group's first $200 million in net tangible assets at the end of the fiscal year(s); or

(iii) $5 million; and

(3) Net tangible assets at the end of the fiscal year(s) not exceeding the greater of—

(i) 10 percent of the controlled group's net tangible assets at the end of the fiscal year(s); or

(ii) $5 million.

De minimis 5-percent segment has the same meaning as a *de minimis* 10-percent segment, except that ''5 percent'' is substituted for ''10 percent'' each time it appears.

Event year means the plan year in which the reportable event occurs.

Fair market value of the plan's assets means the fair market value of the plan's assets as of the testing date for the applicable plan year, including contributions attributable to the previous plan year for funding purposes under section 302(c)(10) of ERISA or section 412(c)(10) of the Code if made by the earlier of the due date or filing date of the variable rate premium for the applicable plan year, but not to the extent contributions are used to satisfy the quarterly contribution requirements under section 302(e) of ERISA or section 412(m) of the Code for the applicable plan year.

Foreign entity means a member of a controlled group that—

(1) Is not a contributing sponsor of a plan;

(2) Is not organized under the laws of (or, if an individual, is not a domiciliary of) any state (as defined in section 3(10) of ERISA); and

(3) For the fiscal year that includes the date the reportable event occurs, meets one of the following tests—

(i) Is not required to file any United States federal income tax form;

(ii) Has no income reportable on any United States federal income tax form other than passive income not exceeding $1,000; or

(iii) Does not own substantial assets in the United States (disregarding stock of a member of the plan's controlled group) and is not required to file any quarterly United States tax returns for employee withholding.

Foreign-linked entity means a person that—

(1) Is neither a foreign entity nor a contributing sponsor of a plan; and

(2) Is a member of the plan's controlled group only because of ownership interests in or by foreign entities.

Foreign parent means a foreign entity that is a direct or indirect parent of a person that is a contributing sponsor.

Form 5500 due date means the deadline (including extensions) for filing the annual report under section 103 of ERISA.

Notice date means the deadline (including extensions) for filing notice of the reportable event with the PBGC.

Participant means a participant as defined in § 4006.2.

Public company means a person subject to the reporting requirements of section 13 or 15(d) of the Securities Exchange Act of 1934 or a subsidiary (as defined for purposes of the Securities Exchange Act of 1934) of a person subject to such reporting requirements.

Testing date means, with respect to a plan year—

(1) The last day of the prior plan year, except as provided in paragraphs (2) or (3) of this definition;

(2) In the case of a new or newly-covered plan (as defined in § 4006.2 of this chapter), the first day of the plan year or, if later, the date on which the plan becomes effective for benefit accruals for future service; or

(3) In the case of a plan described in § 4006.5(e)(2) of this chapter (relating to certain mergers or spinoffs), the first day of the plan year.

Ultimate parent means the parent at the highest level in the chain of corporations and/or other organizations constituting the parent-subsidiary controlled group.

Unfunded vested benefits means unfunded vested benefits determined in accordance with § 4006.4 of this chapter, without regard to the exemptions and special rules in § 4006.5(a)–(c) of this chapter. For purposes of subpart B only, unfunded vested benefits may be determined by subtracting the fair market value of the plan's assets from the plan's vested benefits amount.

Variable rate premium means the portion of the premium determined under section 4006(a)(3)(E) of ERISA and § 4006.3(b) of this chapter.

Vested benefits amount means the vested benefits amount determined under § 4006.4(b)(1) of this chapter.

§ 4043.3 Requirement of notice.

(a) *Obligation to file*—(1) *In general.* Each person that is required to file a notice under this part, or a duly authorized representative, shall submit the information required by this part by the time specified in § 4043.20 (for post-event notice), § 4043.61 (for advance notice), or § 4043.81 (for Form 200 filings). Any information previously filed with the PBGC may be incorporated by reference.

(2) *Multiple plans.* If a reportable event occurs for more than one plan, the filing obligation with respect to each plan is independent of the filing obligation with respect to any other plan.

(3) *Optional consolidated filing.* A filing by any person will be deemed to be a filing by all persons required to notify the PBGC under this part. If notices are required for two or more events, the notices may be combined in one filing.

(b) *Contents of reportable event notice.* A person required to file a reportable event notice shall provide, by the notice date, the following general information, along with any other information required for each reportable event under subpart B or C of this part:

(1) The name of the plan;

(2) The name, address, and telephone number of the contributing sponsor(s) and of an individual that should be contacted;

(3) The name, address, and telephone number of the plan administrator and of an individual that should be contacted;

(4) The EIN of the contributing sponsor and the EIN/PN of the plan;

(5) A brief statement of the pertinent facts relating to the reportable event;

(6) A copy of the plan document in effect, *i.e.*, the last restatement of the plan and all amendments thereto;

(7) A copy of the most recent actuarial statement and opinion (if any) relating to the plan; and

(8) A statement of any material change in the assets or liabilities of the plan occurring after the date of the most recent actuarial statement and opinion.

(c) *Optional reportable event forms.* The PBGC shall issue optional reportable events forms, which may provide for reduced initial information submissions.

(d) *Requests for additional information.* The PBGC may, in any case, require the submission of additional information. Any such information shall be submitted for subpart B of this part within 30 days, and for subpart C or D of this part within 7 days, after the date of a written request by the PBGC, or within a different time period specified therein. The PBGC may in its discretion shorten the time period where it determines that the interests of the PBGC or participants may be prejudiced by a delay in receipt of the information.

(e) *Effect of failure to file.* If a notice (or any other information required under this part) is not provided within the specified time limit, the PBGC may assess against each person required to provide the notice a separate penalty under section 4071 of ERISA of up to $1,100 a day for each day that the failure continues. The PBGC may pursue any other equitable or legal remedies available to it under the law.

[61 FR 63989, Dec. 2, 1996, as amended at 62 FR 36994, July 10, 1997]

§ 4043.4 Waivers and extensions.

(a) *Specific events.* For specific reportable events, waivers from reporting and information requirements and extensions of time are provided in subparts B and C of this part. If an occurrence constitutes two or more reportable events, reporting requirements for each event are determined independently. For example, any event reportable under more than one section will be exempt from reporting only if it satisfies the requirements for a waiver under each section.

(b) *Multiemployer plans.* The requirements of section 4043 of ERISA are waived with respect to multiemployer plans.

(c) *Terminating plans.* No notice is required from the plan administrator or contributing sponsor of a plan if the notice date is on or after the date on which—

(1) All of the plan's assets (other than any excess assets) are distributed pursuant to a termination; or

(2) A trustee is appointed for the plan under section 4042(c) of ERISA.

(d) *Other waivers and extensions.* The PBGC may extend any deadline or waive any other requirement under this part where it finds convincing evidence that the waiver or extension is appropriate under the circumstances. Any waiver or extension may be subject to conditions. A request for a waiver or extension must be filed in writing with the PBGC and must state the facts and circumstances on which the request is based.

§ 4043.5 How and where to file.

The PBGC applies the rules in subpart A of part 4000 of this chapter and the instructions to the applicable PBGC reporting form to determine permissible methods of filing with the PBGC under this part. See § 4000.4 of this chapter for information on where to file.

[68 FR 61354, Oct. 28, 2003]

§ 4043.6 Date of filing.

(a) *Post-Event notice filings.* The PBGC applies the rules in subpart C of part 4000 of this chapter to determine the date that a submission under subpart B of this part was filed with the PBGC.

(b) *Advance notice and Form 200 Filings.* Information filed under subpart C or D of this part is treated as filed on the date it is received by the PBGC. Subpart C of part 4000 of this chapter provides rules for determining when the PBGC receives a submission.

(c) *Partial electronic filing; deemed filing date.* A reportable event notice or Form 200 will be deemed timely filed if—

(1) An electronic transmission containing at least the minimum initial information (as specified in the instruction to the applicable form) is filed on or before the notice date; and

(2) The remaining initial information is received by the PBGC on or before—

(i) The first regular business day following the notice date, in the case of advance notice or a Form 200; or

(ii) The second regular business day following the notice date, in the case of post-event notice.

[61 FR 63989, Dec. 2, 1996, as amended at 68 FR 61354, Oct. 28, 2003]

§ 4043.7 Computation of time.

The PBGC applies the rules in subpart D of part 4000 of this chapter to

compute any time period under this part.

[68 FR 61354, Oct. 28, 2003]

§ 4043.8 Confidentiality.

In accordance with section 4043(f) of ERISA and § 4901.21(a)(3) of this chapter, any information or documentary material that is not publicly available and is submitted to the PBGC pursuant to this part shall not be made public, except as may be relevant to any administrative or judicial action or proceeding or for disclosures to either body of Congress or to any duly authorized committee or subcommittee of the Congress.

Subpart B—Post-Event Notice of Reportable Events

§ 4043.20 Post-Event filing obligation.

The plan administrator and each contributing sponsor of a plan for which a reportable event under this subpart has occurred are required to notify the PBGC within 30 days after that person knows or has reason to know that the reportable event has occurred, unless a waiver or extension applies. If there is a change in plan administrator or contributing sponsor, the reporting obligation applies to the person who is the plan administrator or contributing sponsor of the plan on the 30th day after the reportable event occurs.

§ 4043.21 Tax disqualification and title I noncompliance.

(a) *Reportable event.* A reportable event occurs when the Secretary of the Treasury issues notice that a plan has ceased to be a plan described in section 4021(a)(2) of ERISA, or when the Secretary of Labor determines that a plan is not in compliance with title I of ERISA.

(b) *Waivers.* Notice is waived for this event.

§ 4043.22 Amendment decreasing benefits payable.

(a) *Reportable event.* A reportable event occurs when an amendment to a plan is adopted under which the retirement benefit payable from employer contributions with respect to any participant may be decreased.

(b) *Waivers.* Notice is waived for this event.

§ 4043.23 Active participant reduction.

(a) *Reportable event.* A reportable event occurs when the number of active participants under a plan is reduced to less than 80 percent of the number of active participants at the beginning of the plan year, or to less than 75 percent of the number of active participants at the beginning of the previous plan year.

(b) *Initial information required.* In addition to the information in § 4043.3(b), the notice shall include—

(1) A statement explaining the cause of the reduction (e.g., facility shutdown or sale); and

(2) The number of active participants at the date the reportable event occurs, at the beginning of the plan year, and at the beginning of the prior plan year.

(c) *Waivers*—(1) *Small plan.* Notice is waived if the plan has fewer than 100 participants at the beginning of either the current or the previous plan year.

(2) *Plan funding.* Notice is waived if—

(i) *No variable rate premium.* No variable rate premium is required to be paid for the plan for the event year;

(ii) *$1 million unfunded vested benefits.* As of the testing date for the event year, the plan has less than $1 million in unfunded vested benefits; or

(iii) *No unfunded vested benefits.* As of the testing date for the event year, the plan would have no unfunded vested benefits if unfunded vested benefits were determined in accordance with the assumptions and methodology in § 4010.4(b)(2) of this chapter.

(3) *No facility closing event/80-percent funded.* Notice is waived if—

(i) The active participant reduction would not be reportable if only those active participant reductions resulting from cessation of operations at one or more facilities were taken into account; and

(ii) As of the testing date for the event year, the fair market value of the plan's assets is at least 80 percent of the plan's vested benefits amount.

(d) *Extensions.* The notice date is extended to the latest of—

(1) *Form 1 extension.* 30 days after the plan's variable rate premium filing due date for the event year if a waiver

under any of paragraphs (c)(2)(i) through (c)(2)(iii) or (c)(3) of this section would apply if ''the plan year preceding the event year'' were substituted for ''the event year'';

(2) *Form 5500 extension*. 30 days after the plan's Form 5500 due date that next follows the date the reportable event occurs, provided the event would not be reportable counting only those participant reductions resulting from cessation of operations at a single facility; and

(3) *Form 1–ES extension*. The due date for the Form 1–ES for the plan year following the event year if—

(i) The plan is required to file a Form 1–ES for the plan year following the event year;

(ii) The event would not be reportable counting only those participant reductions resulting from cessation of operations at a single facility; and

(iii) The participant reduction represents no more than 20 percent of the total active participants (at the beginning of the plan year(s) in which the reduction occurs) in all plans maintained by any member of the plan's controlled group.

(e) *Determination of the number of active participants*—(1) *Determination date*. The number of active participants at the beginning of a plan year may be determined by using the number of active participants at the end of the previous plan year.

(2) *Active participant*. ''Active participant'' means a participant who—

(i) Is receiving compensation for work performed;

(ii) Is on paid or unpaid leave granted for a reason other than a layoff;

(iii) Is laid off from work for a period of time that has lasted less than 30 days; or

(iv) Is absent from work due to a recurring reduction in employment that occurs at least annually.

§ 4043.24 Termination or partial termination.

(a) *Reportable event*. A reportable event occurs when the Secretary of the Treasury determines that there has been a termination or partial termination of a plan within the meaning of section 411(d)(3) of the Code.

(b) *Waivers*. Notice is waived for this event.

§ 4043.25 Failure to make required minimum funding payment.

(a) *Reportable event*. A reportable event occurs when a required installment or a payment required under section 302 of ERISA or section 412 of the Code (including a payment required as a condition of a funding waiver) is not made by the due date for the payment. In the case of a payment needed to avoid a deficiency in the plan's funding standard account, the due date is the latest date such payment may be made under section 302(c)(10)(A) of ERISA or section 412(c)(10)(A) of the Code.

(b) *Initial information required*. In addition to the information in § 4043.3(b), the notice shall include—

(1) The due date and amount of the required minimum funding payment that was not made and of the next payment due;

(2) The name of each member of the plan's controlled group and its ownership relationship to other members of that controlled group; and

(3) For each other plan maintained by any member of the plan's controlled group, identification of the plan and its contributing sponsor(s) by name and EIN/PN or EIN, as appropriate.

(c) *Waiver*. Notice is waived if the required minimum funding payment is made by the 30th day after its due date.

(d) *Form 200 filed*. If, with respect to the same failure, a Form 200 has been completed and submitted in accordance with § 4043.81, the Form 200 filing shall satisfy the requirements of this section.

§ 4043.26 Inability to pay benefits when due.

(a) *Reportable event*. A reportable event occurs when a plan is currently unable or projected to be unable to pay benefits.

(1) *Current inability*. A plan is currently unable to pay benefits if it fails to provide any participant or beneficiary the full benefits to which the person is entitled under the terms of the plan, at the time the benefit is due and in the form in which it is due. A

plan shall not be treated as being currently unable to pay benefits if its failure to pay is caused solely by the need to verify the person's eligibility for benefits; the inability to locate the person; or any other administrative delay if the delay is for less than the shorter of two months or two full benefit payment periods.

(2) *Projected inability*. A plan is projected to be unable to pay benefits when, as of the last day of any quarter of a plan year, the plan's ''liquid assets'' are less than two times the amount of the ''disbursements from the plan'' for such quarter. Liquid assets and disbursements from the plan have the same meaning as under section 302(e)(5)(E) of ERISA and section 412(m)(5)(E) of the Code.

(b) *Initial information required*. In addition to the information in § 4043.3(b), the notice shall include—

(1) The date of any current inability and the amount of benefit payments not made;

(2) The next date on which the plan is expected to be unable to pay benefits, the amount of the projected shortfall, and the number of plan participants and beneficiaries expected to be affected by the inability to pay benefits;

(3) For a projected inability described in paragraph (a)(2), the amount of the plan's liquid assets at the end of the quarter, and the amount of its disbursements for the quarter; and

(4) The name, address, and phone number of the trustee of the plan (and of any custodian).

(c) *Waivers*. Notice is waived unless the reportable event occurs during a plan year for which the plan is described in section 302(d)(6)(A) of ERISA or section 412(l)(6)(A) of the Code.

§ 4043.27 Distribution to a substantial owner.

(a) *Reportable event*. A reportable event occurs for a plan when—

(1) There is a distribution to a substantial owner of a contributing sponsor of the plan;

(2) The total of all distributions made to the substantial owner within the one-year period ending with the date of such distribution exceeds $10,000;

(3) The distribution is not made by reason of the substantial owner's death; and

(4) Immediately after the distribution, the plan has nonforfeitable benefits (as provided in § 4022.5) that are not funded.

(b) *Initial information required*. In addition to the information in § 4043.3(b), the notice shall include—

(1) The name, address and telephone number of the substantial owner receiving the distribution(s); and

(2) The amount, form, and date of each distribution.

(c) *Waivers*—(1) *Distribution up to section 415 limit*. Notice is waived if the total of all distributions made to the substantial owner within the one-year period ending with the date of the distribution does not exceed the limitation (as of the date the reportable event occurs) under section 415(b)(1)(A) of the Code (as adjusted in accordance with section 415(d)) when expressed as an annual benefit in the form of a straight life annuity to a participant beginning at Social Security retirement age ($120,000 for calendar year 1996).

(2) *Plan funding*. Notice is waived if—

(i) *No variable rate premium*. No variable rate premium is required to be paid for the plan for the event year;

(ii) *No unfunded vested benefits*. As of the testing date for the event year, the plan would have no unfunded vested benefits if unfunded vested benefits were determined in accordance with the assumptions and methodology in § 4010.4(b)(2) of this chapter; or

(iii) *80-percent funded*. As of the testing date for the event year, the fair market value of the plan's assets is at least 80 percent of the plan's vested benefits amount.

(3) *Distribution up to one percent of assets*. Notice is waived if the sum of the values of all distributions that are made to the substantial owner within the one-year period ending with the date of the distribution is one percent or less of the end-of-year current value of the plan's assets (as required to be reported on the plan's Form 5500) for either of the two plan years immediately preceding the event year.

(d) *Form 1 extension*. The notice date is extended until 30 days after the

plan's variable rate premium filing due date for the event year, provided that a waiver under any of paragraphs (c)(2)(i) through (c)(2)(iii) of this section would apply if ''the plan year preceding the event year'' were substituted for ''the event year.''

(e) *Determination rules*—(1) *Valuation of distribution*. The value of a distribution under this section is the sum of—

(i) The cash amounts actually received by the substantial owner;

(ii) The purchase price of any irrevocable commitment; and

(iii) The fair market value of any other assets distributed, determined as of the date of distribution to the substantial owner.

(2) *Date of substantial owner distribution*. The date of distribution to a substantial owner of a cash distribution is the date it is received by the substantial owner. The date of distribution to a substantial owner of an irrevocable commitment is the date on which the obligation to provide benefits passes from the plan to the insurer. The date of any other distribution to a substantial owner is the date when the plan relinquishes control over the assets transferred directly or indirectly to the substantial owner.

(3) *Determination date*. The determination of whether a participant is (or has been in the preceding 60 months) a substantial owner is made on the date when there has been a distribution that would be reportable under this section if made to a substantial owner.

§ 4043.28 Plan merger, consolidation, or transfer.

(a) *Reportable event*. A reportable event occurs when a plan merges, consolidates, or transfers its assets or liabilities under section 208 of ERISA or section 414(1) of the Code.

(b) *Waivers*. Notice is waived for this event. However, notice may be required under § 4043.29 (for a controlled group change) or § 4043.32 (for a transfer of benefit liabilities).

§ 4043.29 Change in contributing sponsor or controlled group.

(a) *Reportable event*. A reportable event occurs for a plan when there is a transaction that results, or will result, in one or more persons ceasing to be members of the plan's controlled group. For purposes of this section, the term ''transaction'' includes, but is not limited to, a legally binding agreement, whether or not written, to transfer ownership, an actual transfer of ownership, and an actual change in ownership that occurs as a matter of law or through the exercise or lapse of pre-existing rights. A transaction is not reportable if it will result solely in a reorganization involving a mere change in identity, form, or place of organization, however effected.

(b) *Initial information required*. In addition to the information in § 4043.3(b), the notice shall include—

(1) The name of each member of the plan's old and new controlled groups and the member's ownership relationship to other members of those groups;

(2) For each other plan maintained by any member of the plan's old or new controlled group, identification of the plan and its contributing sponsor(s) by name and EIN/PN or EIN, as appropriate; and

(3) A copy of the most recent audited (or if not available, unaudited) financial statements, and the most recent interim financial statements, of the plan's contributing sponsor (both old and new, in the case of a change in the contributing sponsor) and any persons that will cease to be in the plan's controlled group.

(c) *Waivers*—(1) *De minimis 10-percent segment*. Notice is waived if the person or persons that will cease to be members of the plan's controlled group represent a *de minimis* 10-percent segment of the plan's old controlled group for the most recent fiscal year(s) ending on or before the date the reportable event occurs.

(2) *Foreign entity*. Notice is waived if each person that will cease to be a member of the plan's controlled group is a foreign entity other than a foreign parent.

(3) *Plan funding*. Notice is waived if—

(i) *No variable rate premium*. No variable rate premium is required to be paid for the plan for the event year;

(ii) *$1 million unfunded vested benefits*. As of the testing date for the event year, the plan has less than $1 million in unfunded vested benefits; or

(iii) *No unfunded vested benefits.* As of the testing date for the event year, the plan would have no unfunded vested benefits if unfunded vested benefits were determined in accordance with the assumptions and methodology in § 4010.4(b)(2) of this chapter.

(4) *Public company/80-percent funded.* Notice is waived if—

(i) The plan's contributing sponsor before the effective date of the transaction is a public company; and

(ii) As of the testing date for the event year, the fair market value of the plan's assets is at least 80 percent of the plan's vested benefits amount.

(d) *Extensions.* The notice date is extended to the latest of—

(1) *Form 1 extension.* 30 days after the plan's variable rate premium filing due date for the event year if a waiver under any of paragraphs (c)(3)(i) through (c)(3)(iii) or (c)(4) of this section would apply if ''the plan year preceding the event year'' were substituted for ''the event year'';

(2) *Foreign parent and foreign-linked entities.* With respect to a transaction in which only foreign parents or foreign-linked entities will cease to be members of the plan's controlled group, 30 days after the plan's first Form 5500 due date after the person required to notify the PBGC has actual knowledge of the transaction and of the controlled group relationship; and

(3) *Press releases; Forms 10Q.* If the plan's contributing sponsor before the effective date of the transaction is a public company, 30 days after the earlier of—

(i) The first Form 10Q filing deadline that occurs after the transaction; or

(ii) The date (if any) when a press release with respect to the transaction is issued.

(e) *Examples.* The following examples assume that no waivers apply.

(1) *Controlled group breakup.* Plan A's controlled group consists of Company A (its contributing sponsor), Company B (which maintains Plan B), and Company C. As a result of a transaction, the controlled group will break into two separate controlled groups—one segment consisting of Company A and the other segment consisting of Companies B and C. Both Company A (Plan A's contributing sponsor) and the plan administrator of plan A are required to report that Companies B and C will leave plan A's controlled group. Company B (Plan B's contributing sponsor) and the plan administrator of Plan B are required to report that Company A will leave Plan B's controlled group. Company C is not required to report because it is not a contributing sponsor or a plan administrator.

(2) *Change in contributing sponsor.* Plan Q is maintained by Company Q. Company Q enters into a binding contract to sell a portion of its assets and to transfer employees participating in Plan Q, along with Plan Q, to Company R, which is not a member of Company Q's controlled group. There will be no change in the structure of Company Q's controlled group. On the effective date of the sale, Company R will become the contributing sponsor of Plan Q. A reportable event occurs on the date of the transaction (*i.e.*, the binding contract), because as a result of the transaction, Company Q (and any other member of its controlled group) will cease to be a member of Plan Q's controlled group. If, on the 30th day after Company Q and Company R enter into the binding contract, the change in the contributing sponsor has not yet become effective, Company Q has the reporting obligation. If the change in the contributing sponsor has become effective by the 30th day, Company R has the reporting obligation.

(3) *Merger/consolidation within a controlled group.* Company X and Company Y are subsidiaries of Company Z, which maintains Plan Z. Company Y merges into Company X (only Company X survives). Company Z and the plan administrator of Plan Z must report that Company Y has ceased to be a member of Plan Z's controlled group.

§ 4043.30 Liquidation.

(a) *Reportable event.* A reportable event occurs for a plan when a member of the plan's controlled group—

(1) Is involved in any transaction to implement its complete liquidation (including liquidation into another controlled group member);

(2) Institutes or has instituted against it a proceeding to be dissolved or is dissolved, whichever occurs first; or

(3) Liquidates in a case under the Bankruptcy Code, or under any similar law.

(b) *Initial information required.* In addition to the information in § 4043.3(b), the notice shall include—

(1) The name of each member of the plan's controlled group before and after the liquidation and its ownership relationship to other members of that controlled group; and

(2) For each other plan maintained by any member of the plan's controlled group, identification of the plan and its contributing sponsor(s) by name and EIN/PN or EIN, as appropriate.

(c) *Waivers*—(1) *De minimis 10-percent segment.* Notice is waived if—

(i) The person or persons that liquidate represent a *de minimis* 10-percent segment of the plan's controlled group for the most recent fiscal year(s) ending on or before the date the reportable event occurs; and

(ii) Each plan that was maintained by the liquidating member is maintained by another member of the plan's controlled group after the liquidation.

(2) *Foreign entity.* Notice is waived if each person that liquidates is a foreign entity other than a foreign parent.

(3) *Plan funding.* Notice is waived if each plan that was maintained by the liquidating member is maintained by another member of the plan's controlled group after the liquidation and—

(i) *No variable rate premium.* No variable rate premium is required to be paid for the plan for the event year;

(ii) *$1 million unfunded vested benefits.* As of the testing date for the event year, the plan has less than $1 million in unfunded vested benefits; or

(iii) *No unfunded vested benefits.* As of the testing date for the event year, the plan would have no unfunded vested benefits if unfunded vested benefits were determined in accordance with the assumptions and methodology in § 4010.4(b)(2) of this chapter.

(4) *Public company/80-percent funded.* Notice is waived if—

(i) The plan's contributing sponsor is a public company;

(ii) As of the testing date for the event year, the fair market value of the plan's assets is at least 80 percent of the plan's vested benefits amount; and

(iii) Each plan that was maintained by the liquidating member is maintained by another member of the plan's controlled group after the liquidation.

(d) *Extensions.* The notice date is extended to the latest of—

(1) *Form 1 extension.* 30 days after the plan's variable rate premium filing due date for the event year if a waiver under any of paragraphs (c)(3)(i) through (c)(3)(iii) or (c)(4) of this section would apply if ''the plan year preceding the event year'' were substituted for ''the event year'';

(2) *Foreign parent and foreign-linked entity.* 30 days after the plan's first Form 5500 due date after the person required to notify the PBGC has actual knowledge of the transaction and of the controlled group relationship, if the person liquidating is a foreign parent or foreign-linked entity; and

(3) *Press releases; Forms 100.* If the plan's contributing sponsor is a public company, 30 days after the earlier of—

(i) The first Form 10Q filing deadline that occurs after the transaction; or

(ii) The date (if any) when a press release with respect to the transaction is issued.

§ 4043.31 Extraordinary dividend or stock redemption.

(a) *Reportable event.* A reportable event occurs for a plan when any member of the plan's controlled group declares a dividend (as defined in paragraph (e)(3) of this section) or redeems its own stock, if the resulting distribution is reportable under this paragraph.

(1) *Cash distributions.* A cash distribution is reportable if—

(i) The distribution, when combined with any other cash distributions to shareholders previously made during the fiscal year, exceeds the adjusted net income (as defined in paragraph (e)(1) of this section) of the person making the distribution for the preceding fiscal year; and

(ii) The distribution, when combined with any other cash distributions to shareholders previously made during the fiscal year or during the three prior fiscal years, exceeds the adjusted net income (as defined in paragraph (e)(1) of this section) of the person making

the distribution for the four preceding fiscal years.

(2) *Non-cash distributions.* A non-cash distribution is reportable if its net value (as defined in paragraph (e)(4) of this section), when combined with the net value of any other non-cash distributions to shareholders previously made during the fiscal year, exceeds 10 percent of the total net assets (as defined in paragraph (e)(6) of this section) of the person making the distribution.

(3) *Combined distributions.* If both cash and non-cash distributions to shareholders are made during a fiscal year, a distribution is reportable when the sum of the cash distribution percentage (as defined in paragraph (e)(2) of this section) and the non-cash distribution percentages (as defined in paragraph (e)(5) of this section) for the fiscal year exceeds 100 percent.

(b) *Information required.* In addition to the information in § 4043.5(b), the notice shall include—

(1) Identification of the person making the distribution (by name and EIN); and

(2) The date and amount of any cash distribution during the fiscal year;

(3) A description of any non-cash distribution during the fiscal year, the fair market value of each asset distributed, and the date or dates of distribution; and

(4) A statement as to whether the recipient was a member of the plan's controlled group.

(c) *Waivers*—(1) *Extraordinary dividends and stock redemptions.* The reportable event described in section 4043(c)(11) of ERISA related to extraordinary dividends and stock redemptions is waived except to the extent reporting is required under this section.

(2) *De minimis 5-percent segment.* Notice is waived if the person making the distribution is a *de minimis* 5-percent segment of the plan's controlled group for the most recent fiscal year(s) ending on or before the date the reportable event occurs.

(3) *Foreign entity.* Notice is waived if the person making the distribution is a foreign entity other than a foreign parent.

(4) *Foreign parent.* Notice is waived if the person making the distribution is a foreign parent, and the distribution is made solely to other members of the plan's controlled group.

(5) *Plan funding.* Notice is waived if—

(i) *No variable rate premium.* No variable rate premium is required to be paid for the plan for the event year;

(ii) *$1 million unfunded vested benefits.* As of the testing date for the event year, the plan has less than $1 million in unfunded vested benefits;

(iii) *No unfunded vested benefits.* As of the testing date for the event year, the plan would have no unfunded vested benefits if unfunded vested benefits were determined in accordance with the assumptions and methodology in § 4010.4(b)(2) of this chapter; or

(iv) *80-percent funded.* As of the testing date for the event year, the fair market value of the plan's assets is at least 80 percent of the plan's vested benefits amount.

(d) *Extensions.* The notice date is extended to the latest of—

(1) *Form 1 extension.* 30 days after the plan's variable rate premium filing due date for the event year if a waiver under any of paragraphs (c)(5)(i) through (c)(5)(iv) of this section would apply if ''the plan year preceding the event year'' were substituted for ''the event year'';

(2) *Foreign parent and foreign-linked entity.* 30 days after the plan's first Form 5500 due date after the person required to notify the PBGC has actual knowledge of the distribution and the controlled group relationship, if the person making the distribution is a foreign parent or foreign-linked entity; and

(3) *Press releases; Forms 10Q.* If the plan's contributing sponsor is a public company, 30 days after the earlier of—

(i) The first Form 10Q filing deadline that occurs after the distribution; or

(ii) The date (if any) when a press release with respect to the distribution is issued.

(e) *Definitions*—(1) *Adjusted net income* means the net income before after-tax gain or loss on any sale of assets, as determined in accordance with generally accepted accounting principles and practices.

(2) *Cash distribution percentage* means, for a fiscal year, the lesser of—

(i) The percentage that all cash distributions to one or more shareholders

made during that fiscal year bears to the adjusted net income (as defined in paragraph (e)(1) of this section) of the person making the distributions for the preceding fiscal year, or

(ii) The percentage that all cash distributions to one or more shareholders made during that fiscal year and the three preceding fiscal years bears to the adjusted net income (as defined in paragraph (e)(1) of this section) of the person making the distributions for the four preceding fiscal years.

(3) *Dividend* means a distribution to one or more shareholders. A payment by a person to a member of its controlled group is treated as a distribution to its shareholder(s).

(4) *Net value of non-cash distribution* means the fair market value of assets transferred by the person making the distribution, reduced by the fair market value of any liabilities assumed or consideration given by the recipient in connection with the distribution. A distribution of stock that one controlled group member holds in another controlled group member is disregarded. Net value determinations should be based on readily available fair market value(s) or independent appraisal(s) performed within one year before the distribution is made. To the extent that fair market values are not readily available and no such appraisals exist, the fair market value of an asset transferred in connection with a distribution or a liability assumed by a recipient of a distribution shall be deemed to be equal to 200 percent of the book value of the asset or liability on the books of the person making the distribution. Stock redeemed is deemed to have no value.

(5) *Non-cash distribution percentage* means the percentage that the net value of the non-cash distribution bears to one-tenth of the value of the total net assets (as defined in paragraph (e)(6) of this section) of the person making the distribution.

(6) *Total net assets* means, with respect to the person declaring a non-cash distribution—

(i) If all classes of the person's securities are publicly traded, the total market value (immediately before the distribution is made) of the publicly-traded securities of the person making the distribution;

(ii) If no classes of the person's securities are publicly traded, the excess (immediately before the distribution is made) of the book value of the person's assets over the book value of the person's liabilities, adjusted to reflect the net value of the non-cash distribution; or

(iii) If some but not all classes of the person's securities are publicly traded, the greater of the amounts in paragraphs (e)(6)(i) or (ii) of this section.

§ 4043.32 Transfer of benefit liabilities.

(a) *Reportable event*—(1) *In general*. A reportable event occurs for a plan when—

(i) The plan or any other plan maintained by a person in the plan's controlled group makes a transfer of benefit liabilities to a person, or to a plan or plans maintained by a person or persons, that are not members of the transferor plan's controlled group; and

(ii) The amount of benefit liabilities transferred, in conjunction with other benefit liabilities transferred during the 12-month period ending on the date of the transfer, is 3 percent or more of the plan's total benefit liabilities. Both the benefit liabilities transferred and the plan's total benefit liabilities shall be valued as of any one date in the plan year in which the transfer occurs, using actuarial assumptions that comply with section 414(l) of the Code.

(2) *Date of transfer*. The date of transfer shall be determined on the basis of the facts and circumstances of the particular situation. For transfers subject to the requirements of section 414(l) of the Code, the date determined in accordance with 26 CFR 1.414(l)–1(b)(11) will be considered the date of transfer.

(b) *Initial information required*. In addition to the information required in § 4043.3(b), the notice shall include—

(1) Identification of the transferee(s) and each contributing sponsor of each transferee plan by name and EIN/PN or EIN, as appropriate;

(2) An explanation of the actuarial assumptions used in determining the value of benefit liabilities (and, if appropriate, the value of plan assets) for each transfer; and

(3) An estimate of the amounts of assets and liabilities being transferred, and the number of participants whose benefits are transferred.

(c) *Waivers*—(1) *Complete plan transfer*. Notice is waived if the transfer is a transfer of all of the transferor plan's benefit liabilities and assets to one other plan.

(2) *Transfer of less than 3 percent of assets*. Notice is waived if the value of the assets being transferred—

(i) Equals the present value of the accrued benefits (whether or not vested) being transferred, using actuarial assumptions that comply with section 414(l) of the Code; and

(ii) In conjunction with other assets transferred during the same plan year, is less than 3 percent of the assets of the transferor plan as of at least one day in that year.

(3) *Section 414(l) safe harbor*. Notice is waived if the transfer complies with section 414(l) of the Code using the actuarial assumptions prescribed for valuing benefits in trusteed plans under § 4044.51–57 of this chapter.

(4) *Fully funded plans*. Notice is waived if the transfer complies with section 414(l) of the Code using reasonable actuarial assumptions and, after the transfer, the transferor and transferee plans are fully funded (using the actuarial assumptions prescribed for valuing benefits in trusteed plans under § 4044.51–57) of this chapter.

(d) *Who must file*. Only the plan administrator and contributing sponsor of the plan that made the transfer described in paragraph (a)(1) of this section are required to file a notice of a reportable event under this section. Notice by any other contributing sponsor or plan administrator is waived.

§ 4043.33 Application for minimum funding waiver.

(a) *Reportable event*. A reportable event for a plan occurs when an application for a minimum funding waiver for the plan is submitted under section 303 of ERISA or section 412(d) of the Code.

(b) *Initial information required*. In addition to the information in § 4043.3(b), the notice shall include a copy of the waiver application, including all attachments.

§ 4043.34 Loan default.

(a) *Reportable event*. A reportable event occurs for a plan whenever there is a default by a member of the plan's controlled group with respect to a loan with an outstanding balance of $10 million or more, if—

(1) The default results from the debtor's failure to make a required loan payment when due (unless the payment is made within 30 days after the due date);

(2) The lender accelerates the loan; or

(3) The debtor receives a written notice of default from the lender (and does not establish the notice was issued in error) on account of:

(i) A drop in the debtor's cash reserves below an agreed-upon level;

(ii) An unusual or catastrophic event experienced by the debtor; or

(iii) A persisting failure by the debtor to attain agreed-upon financial performance levels.

(b) *Initial information required*. In addition to the information in § 4043.3(b), the notice shall include—

(1) A copy of the relevant loan documents (e.g., promissory note, security agreement);

(2) The due date and amount of any missed payment;

(3) A copy of any notice of default from the lender; and

(4) A copy of any notice of acceleration from the lender.

(c) *Waivers*—(1) *Default cured*. Notice is waived if the default is cured, or waived by the lender, within 30 days or, if later, by the end of any cure period provided by the loan agreement.

(2) *Foreign entity*. Notice is waived if the debtor is a foreign entity other than a foreign parent.

(3) *Plan funding*. Notice is waived if—

(i) *No variable rate premium*. No variable rate premium is required to be paid for the plan for the event year;

(ii) *$1 million unfunded vested benefits*. As of the testing date for the event year, the plan has less than $1 million in unfunded vested benefits;

(iii) *No unfunded vested benefits*. As of the testing date for the event year, the plan would have no unfunded vested benefits if unfunded vested benefits were determined in accordance with the assumptions and methodology in § 4010.4(b)(2) of this chapter; or

(iv) *80-percent funded*. As of the testing date for the event year, the fair market value of the plan's assets is at least 80 percent of the plan's vested benefits amount.

(d) *Notice date and extensions*—(1) *In general*. Except as provided in paragraph (d)(2) or (d)(3) of this section, the notice date is 30 days after the person required to report knows or has reason to know of the occurrence of the default, without regard to the time of any other conditions required for the default to be reportable.

(2) *Cure period extensions*. The notice date is extended to one day after—

(i) The applicable cure period provided in the loan agreement (in the case of a reportable event described in paragraph (a)(1) of this section);

(ii) The date the loan is accelerated (in the case of a reportable event described in paragraph (a)(2) of this section); or

(iii) The date the debtor receives written notice of the default (in the case of a reportable event described in paragraph (a)(3) of this section).

(3) *Form 1 extension*. The notice date is extended to 30 days after the plan's variable rate premium filing due date for the event year, if a waiver under any of paragraphs (c)(3)(i) through (c)(3)(iv) of this section would apply if the ''the plan year preceding the event year'' were substituted for ''the event year.''

(4) *Foreign parent and foreign-linked entities*. With respect to a loan default involving only a foreign parent or a foreign-linked entity, the notice date is extended to 30 days after the plan's first Form 5500 due date after the person required to notify the PBGC has actual knowledge of the default and of the controlled group relationship.

(5) *Example*. Company A has a debt with an outstanding balance of $20 million, for which a payment is due on October 1. Under the terms of the loan, the default may be cured within 10 days. Company A does not make the payment until October 31. Because Company A has made the payment within 30 days of the due date, no reportable event has occurred. If Company A does not make the payment by October 31, a reportable event will have occurred on October 1, and notice will be due by October 31.

§ 4043.35 Bankruptcy or similar settlement.

(a) *Reportable event*. A reportable event occurs for a plan when any member of the plan's controlled group—

(1) Commences a bankruptcy case (under the Bankruptcy Code), or has a bankruptcy case commenced against it;

(2) Commences or has commenced against it any other type of insolvency proceeding (including, but not limited to, the appointment of a receiver);

(3) Commences, or has commenced against it, a proceeding to effect a composition, extension, or settlement with creditors;

(4) Executes a general assignment for the benefit of creditors; or

(5) Undertakes to effect any other nonjudicial composition, extension, or settlement with substantially all its creditors.

(b) *Initial information required*. In addition to the information in § 4043.3(b), the notice shall include—

(1) A copy of all papers filed in the relevant proceeding, including, but not limited to, petitions and supporting schedules;

(2) The last date for filing claims;

(3) The name, address, and phone number of any trustee or receiver (or similar person);

(4) The name of each member of the plan's controlled group and its ownership relationship to other members of that controlled group; and

(5) For each other plan maintained by any member of the plan's controlled group, identification of the plan and its contributing sponsor(s) by name and EIN/PN or EIN, as appropriate.

(c) *Waivers*. Notice is waived if the person described in paragraph (a) of this section is a foreign entity other than a foreign parent.

(d) *Extensions*. Unless the controlled group member described in paragraph (a) of this section is the contributing sponsor of the plan, the notice date is extended until 30 days after the person required to notify the PBGC has actual knowledge of the reportable event.

Subpart C—Advance Notice of Reportable Events

§ 4043.61 Advance reporting filing obligation.

(a) *In general.* Unless a waiver or extension applies with respect to the plan, each contributing sponsor of a plan for which a reportable event under this subpart is going to occur is required to notify the PBGC no later than 30 days before the effective date of the reportable event if the contributing sponsor is subject to advance reporting. If there is a change in contributing sponsor, the reporting obligation applies to the person who is the contributing sponsor of the plan on the notice date.

(b) Persons subject to advance reporting. A contributing sponsor is subject to the advance reporting requirement under paragraph (a) of this section if—

(1) Neither the contributing sponsor nor the member of the plan's controlled group to which the event relates is a public company; and

(2) The contributing sponsor is a member of a controlled group maintaining one or more plans that, in the aggregate (disregarding plans with no unfunded vested benefits) have—

(i) Vested benefits amounts that exceed the actuarial values of plan assets by more than $50 million; and

(ii) A funded vested benefit percentage of less than 90 percent.

(c) *Funding determinations.* For purposes of paragraph (b)(2) of this section—

(1) *Actuarial value of assets.* The actuarial value of plan assets is determined in accordance with § 4006.4(b)(2) of this chapter;

(2) *Funded vested benefit percentage.* The aggregate funded vested percentage of one or more plans is the percentage that the total actuarial values of plan assets bears to the plans' total vested benefits amounts; and

(3) *Testing date.* Each plan's assets and vested benefits amount are determined as of that plan's testing date for the plan year that includes the effective date of the reportable event.

(d) *Shortening of 30-day period.* Pursuant to § 4043.3(d), the PBGC may, upon review of an advance notice, shorten the notice period to allow for an earlier effective date.

§ 4043.62 Change in contributing sponsor or controlled group.

(a) *Reportable event and information required.* Advance notice is required for a change in a plan's contributing sponsor or controlled group, as described in § 4043.29(a), and the notice shall include the information described in § 4043.29(b) and, if known, the expected effective date of the reportable event.

(b) *Waivers*—(1) *Small plan.* Notice is waived with respect to a change of contributing sponsor if the transferred plan has 500 or fewer participants.

(2) *De minimis 5-percent segment.* Notice is waived if the person or persons that will cease to be members of the plan's controlled group represent a *de minimis* 5-percent segment of the plan's old controlled group for the most recent fiscal year(s) ending on or before the effective date of the reportable event.

§ 4043.63 Liquidation.

(a) *Reportable event and information required.* Advance notice is required for a liquidation of a member of a plan's controlled group, as described in § 4043.30(a), and the notice shall include the information described in § 4043.30(b) and, if known, the expected effective date of the reportable event.

(b) *Waiver.* Notice is waived if the person that liquidates is a *de minimis* 5-percent segment of the plan's controlled group for the most recent fiscal year(s) ending on or before the effective date of the reportable event, and each plan that was maintained by the liquidating member is maintained by another member of the plan's controlled group.

§ 4043.64 Extraordinary dividend or stock redemption.

(a) *Reportable event and information required.* Advance notice is required for a distribution by a member of a plan's controlled group that would be described in § 4043.31(a) if both assets and liabilities were valued at fair market value. The notice shall include the information described in § 4043.31(b).

(b) *Waiver.* Notice is waived if the person making the distribution is a *de*

minimis 5-percent segment of the plan's controlled group for the most recent fiscal year(s) ending on or before the effective date of the reportable event.

§ 4043.65 Transfer of benefit liabilities.

(a) *Reportable event and information required.* Advance notice is required for a transfer of benefit liabilities, as described in § 4043.32(a) (determined without regard to § 4043.32(d)), and the notice shall include the information described in § 4043.32(b).

(b) *Waivers.* Notice is waived—

(1) In the circumstances described in § 4043.32 (c)(1), (c)(2), and (c)(4); and

(2) If the benefit liabilities of 500 or fewer participants are transferred, in the circumstances described in § 4043.32(c)(3).

§ 4043.66 Application for minimum funding waiver.

(a) *Reportable event and information required.* Advance notice is required for an application for a minimum funding waiver, as described in § 4043.33(a), and the notice shall include the information described in § 4043.33(b).

(b) *Extension.* The notice date is extended until 10 days after the reportable event has occurred.

§ 4043.67 Loan default.

(a) *Reportable event and information required.* Advance notice is required for a loan default, as described in § 4043.34(a) (or that would be so described if ''10 days'' were substituted for ''30 days'' in § 4043.34(a)(1)). The notice shall include the information described in § 4043.34(b).

(b) *Waivers.* Notice is waived if the reportable default is cured, or the lender waives the default, within 10 days or, if later, by the end of any cure period.

(c) *Extensions.* The notice date is extended to the later of—

(1) *10 days after default.* 10 days after the default occurs (without regard to the time of any other conditions required for the default to be reportable); and

(2) *One day after subsequent event.* One day after—

(i) The applicable cure period provided in the loan agreement (in the case of a default described in § 4043.34(a)(1));

(ii) The date the loan is accelerated (in the case of a default described in § 4043.34(a)(2)); and

(iii) The date the debtor receives written notice of the default (in the case of a default described in § 4043.34(a)(3)).

§ 4043.68 Bankruptcy or similar settlement.

(a) *Reportable event and information required.* Advance notice is required for a bankruptcy or similar settlement, as described in § 4043.35(a), and the notice shall include the information described in § 4043.35(b).

(b) *Extension.* The notice date is extended until 10 days after the reportable event has occurred.

Subpart D—Notice of Failure To Make Required Contributions

§ 4043.81 PBGC Form 200, notice of failure to make required contributions; supplementary information.

(a) *General rules.* To comply with the notification requirement in section 302(f)(4) of ERISA and section 412(n)(4) of the Code, a contributing sponsor of a single-employer plan that is covered under section 4021 of ERISA and, if that contributing sponsor is a member of a parent-subsidiary controlled group, the ultimate parent must complete and submit in accordance with this section a properly certified Form 200 that includes all required documentation and other information, as described in the related filing instructions. Notice is required whenever the unpaid balance of a required installment or any other payment required under section 302 of ERISA and section 412 of the Code (including interest), when added to the aggregate unpaid balance of all preceding such installments or other payments for which payment was not made when due (including interest), exceeds $1 million.

(1) Form 200 must be filed with the PBGC no later than 10 days after the due date for any required payment for which payment was not made when due.

(2) If a contributing sponsor or the ultimate parent completes and submits

Form 200 in accordance with this section, the PBGC will consider the notification requirement in section 302(f)(4) of ERISA and section 412(n)(4) of the Code to be satisfied by all members of a controlled group of which the person who has filed Form 200 is a member.

(b) *Supplementary information.* If, upon review of a Form 200, the PBGC concludes that it needs additional information in order to make decisions regarding enforcement of a lien imposed by section 302(f) of ERISA and section 412(n) of the Code, the PBGC may require any member of the contributing sponsor's controlled group to supplement the Form 200 in accordance with § 4043.3(d).

PART 4044—ALLOCATION OF ASSETS IN SINGLE-EMPLOYER PLANS

Subpart A—Allocation of Assets

GENERAL PROVISIONS

Sec.
4044.1 Purpose and scope.
4044.2 Definitions.
4044.3 General rule.
4044.4 Violations.

ALLOCATION OF ASSETS TO BENEFIT CATEGORIES

4044.10 Manner of allocation.
4044.11 Priority category 1 benefits.
4044.12 Priority category 2 benefits.
4044.13 Priority category 3 benefits.
4044.14 Priority category 4 benefits.
4044.15 Priority category 5 benefits.
4044.16 Priority category 6 benefits.
4044.17 Subclasses.

ALLOCATION OF RESIDUAL ASSETS

4044.30 [Reserved]

Subpart B—Valuation of Benefits and Assets

GENERAL PROVISIONS

4044.41 General valuation rules.

TRUSTEED PLANS

4044.51 Benefits to be valued.
4044.52 Valuation of benefits.
4044.53 Mortality assumptions.
4044.54 [Reserved]

EXPECTED RETIREMENT AGE

4044.55 XRA when a participant must retire to receive a benefit.
4044.56 XRA when a participant need not retire to receive a benefit.
4044.57 Special rule for facility closing.

NON-TRUSTEED PLANS

4044.71 Valuation of annuity benefits.
4044.72 Form of annuity to be valued.
4044.73 Lump sums and other alternative forms of distribution in lieu of annuities.
4044.74 Withdrawal of employee contributions.
4044.75 Other lump sum benefits.

APPENDIX A TO PART 4044—MORTALITY RATE TABLES
APPENDIX B TO PART 4044—INTEREST RATES USED TO VALUE BENEFITS
APPENDIX C TO PART 4044—LOADING ASSUMPTIONS
APPENDIX D TO PART 4044—TABLES USED TO DETERMINE EXPECTED RETIREMENT AGE

AUTHORITY: 29 U.S.C. 1301(a), 1302(b)(3), 1341, 1344, 1362.

SOURCE: 61 FR 34059, July 1, 1996, unless otherwise noted.

NOTE: Certain provisions of part 4044 have been superseded by legislative changes. For example, there are references to provisions formerly codified in 29 CFR part 2617, subpart C (and to the Notice of Sufficiency provided for thereunder) that no longer exist because of changes in the PBGC's plan termination regulations in response to the Single-Employer Pension Plan Amendments Act of 1986 and the Pension Protection Act of 1987. The PBGC intends to amend part 4044 at a later date to conform it to current statutory provisions.

Subpart A—Allocation of Assets

GENERAL PROVISIONS

§ 4044.1 Purpose and scope.

This part implements section 4044 of ERISA, which contains rules for allocating a plan's assets when the plan terminates. These rules have been in effect since September 2, 1974, the date of enactment of ERISA. This part applies to any single-employer plan covered by title IV of ERISA that submits a notice of intent to terminate, or for which PBGC commences an action to terminate the plan under section 4042 of ERISA.

(a) *Subpart A.* Sections 4044.1 through 4044.4 set forth general rules for applying §§ 4044.10 through 4044.17. Sections 4044.10 through 4044.17 interpret the rules and describe procedures for allocating plan assets to priority categories 1 through 6.

(b) *Subpart B*. The purpose of subpart B is to establish the method of determining the value of benefits and assets under terminating single-employer pension plans covered by title IV of ERISA. This valuation is needed for both plans trusteed under title IV and plans which are not trusteed. For the former, the valuation is needed to allocate plan assets in accordance with subpart A of this part and to determine the amount of any plan asset insufficiency. For the latter, the valuation is needed to allocate assets in accordance with subpart A and to distribute the assets in accordance with subpart B of part 4041 of this chapter.

(1) Section 4044.41 sets forth the general provisions of subpart B and applies to all terminating single-employer plans. Sections 4044.51 through 4044.57 prescribe the benefit valuation rules for plans that are placed into trusteeship by PBGC, including (in §§ 4044.55 through 4044.57) the rules and procedures a plan administrator shall follow to determine the expected retirement age (XRA) for a plan participant entitled to early retirement benefits for whom the annuity starting date is not known as of the valuation date. This applies to all trusteed plans which have such early retirement benefits. The plan administrator shall determine an XRA under § 4044.55, § 4044.56 or § 4044.57, as appropriate, for each active participant or participant with a deferred vested benefit who is entitled to an early retirement benefit and who as of the valuation date has not selected an annuity starting date.

(2) Sections 4044.71 through 4044.75 prescribe the benefit valuation rules for calculating the value of a benefit to be paid a participant or beneficiary under a terminating pension plan that is distributing assets where the plan has not been placed into trusteeship by PBGC.

[61 FR 34059, July 1, 1996, as amended at 76 FR 34605, June 14, 2011]

§ 4044.2 Definitions.

(a) The following terms are defined in § 4001.2 of this chapter: annuity, bankruptcy filing date, basic-type benefit, Code, distribution date, earliest retirement age at valuation date, ERISA, expected retirement age (XRA), fair market value, guaranteed benefit, insurer, IRS, irrevocable commitment, mandatory employee contributions, nonbasic-type benefit, nonforfeitable benefit, non-PPA 2006 bankruptcy termination, normal retirement age, notice of intent to terminate, PBGC, person, plan, plan administrator, single-employer plan, substantial owner, termination date, unreduced retirement age (URA), and voluntary employee contributions.

(b) For purposes of this part:

Deferred annuity means an annuity under which the specified date or age at which payments are to begin occurs after the valuation date.

Early retirement benefit means an annuity benefit payable under the terms of the plan, under which the participant is entitled to begin receiving payments before his or her normal retirement age and which is not payable on account of the disability of the participant. It may be reduced according to the terms of the plan.

Non-trusteed plan means a single-employer plan which is able to close out by purchasing annuities in the private sector

Priority category means one of the categories contained in sections 4044 (a)(1) through (a)(6) of ERISA that establish the order in which plan assets are to be allocated.

Trusteed plan means a single-employer plan which has been placed into trusteeship by PBGC.

Valuation date means (1) for non-trusteed plans, the date of distribution and (2) for trusteed plans, the termination date.

(c) For purposes of subpart B of this part (unless otherwise required by the context):

Age means the participant's age at his or her nearest birthday and is determined by rounding the individual's exact age to the nearest whole year. Half years are rounded to the next highest year. This is also known as the ''insurance age.''

(d) For purposes of §§ 4044.55 through 4044.57:

Monthly benefit means the guaranteed benefit payable by PBGC.

(e) For purposes of §§ 4044.71 through 4044.75:

Lump sum payable in lieu of an annuity means a benefit that is payable in a

single installment and is derived from an annuity payable under the plan.

Other lump sum benefit means a benefit in priority category 5 or 6, determined under subpart A of this part, that is payable in a single installment (or substantially so) under the terms of the plan, and that is not derived from an annuity payable under the plan. The benefit may be a severance pay benefit, a death benefit or other single installment benefit.

[61 FR 34059, July 1, 1996, as amended at 67 FR 16959, Apr. 8, 2002; 74 FR 11035, Mar. 16, 2009; 76 FR 34605, June 14, 2011]

§ 4044.3 General rule.

(a) *Asset allocation*. Upon the termination of a single-employer plan, the plan administrator shall allocate the plan assets available to pay for benefits under the plan in the manner prescribed by this subpart. Plan assets available to pay for benefits include all plan assets (valued according to § 4044.41(b)) remaining after the subtraction of all liabilities, other than liabilities for future benefit payments, paid or payable from plan assets under the provisions of the plan. Liabilities include expenses, fees and other administrative costs, and benefit payments due before the allocation date. Except as provided in § 4044.4(b), an irrevocable commitment by an insurer to pay a benefit, which commitment is in effect on the date of the asset allocation, is not considered a plan asset, and a benefit payable under such a commitment is excluded from the allocation process.

(b) *Allocation date*. For plans that close out under § 4041.28 or § 4041.50, assets shall be allocated as of the date plan assets are to be distributed. For other plans, assets shall be allocated as of the termination date.

[61 FR 34059, July 1, 1996, as amended at 76 FR 34605, June 14, 2011]

§ 4044.4 Violations.

(a) *General*. A plan administrator violates ERISA if plan assets are allocated or distributed upon plan termination in a manner other than that prescribed in section 4044 of ERISA and this subpart, except as may be required to prevent disqualification of the plan under the Code and regulations thereunder.

(b) *Distributions in anticipation of termination*. A distribution, transfer, or allocation of assets to a participant or to an insurance company for the benefit of a participant, made in anticipation of plan termination, is considered to be an allocation of plan assets upon termination, and is covered by paragraph (a) of this section. In determining whether a distribution, transfer, or allocation of assets has been made in anticipation of plan termination PBGC will consider all of the facts and circumstances including—

(1) Any change in funding or operation procedures;

(2) Past practice with regard to employee requests for forms of distribution;

(3) Whether the distribution is consistent with plan provisions; and

(4) Whether an annuity contract that provides for a cutback based on the guarantee limits in subpart B of part 4022 of this chapter could have been purchased from an insurance company.

ALLOCATION OF ASSETS TO BENEFIT CATEGORIES

§ 4044.10 Manner of allocation.

(a) *General*. The plan administrator shall allocate plan assets available to pay for benefits under the plan using the rules and procedures set forth in paragraphs (b) through (f) of this section, or any other procedure that results in each participant (or beneficiary) receiving the same benefits he or she would receive if the procedures in paragraphs (b) through (f) were followed.

(b) *Assigning benefits*. The basic-type and nonbasic-type benefits payable with respect to each participant in a terminated plan shall be assigned to one or more priority categories in accordance with §§ 4044.11 through 4044.16. Benefits derived from voluntary employee contributions, which are assigned only to priority category 1, are treated, under section 204(c)(4) of ERISA and section 411(d)(5) of the Code, as benefits under a separate plan. The amount of a benefit payable with respect to each participant shall be determined as of the termination date, but, in a PPA 2006 bankruptcy termination, subject to the limitations in

sections 4022(g) and 4044(e) of ERISA (and corresponding provisions of these regulations).

(c) *Valuing benefits.* The value of a participant's benefit or benefits assigned to each priority category shall be determined, as of the allocation date, in accordance with the provisions of subpart B of this part. The value of each participant's basic-type benefit or benefits in a priority category shall be reduced by the value of the participant's benefit of the same type that is assigned to a higher priority category. Except as provided in the next two sentences, the same procedure shall be followed for nonbasic-type benefits. The value of a participant's nonbasic-type benefits in priority categories 3, 5, and 6 shall not be reduced by the value of the participant's nonbasic-type benefit assigned to priority category 2. Benefits in priority category 1 shall neither be included in nor subtracted from lower priority categories. In no event shall a benefit assigned to a priority category be valued at less than zero.

(d) *Allocating assets to priority categories.* Plan assets available to pay for benefits under the plan shall be allocated to each priority category in succession, beginning with priority category 1. If the plan has sufficient assets to pay for all benefits in a priority category, the remaining assets shall then be allocated to the next lower priority category. This process shall be repeated until all benefits in priority categories 1 through 6 have been provided or until all available plan assets have been allocated.

(e) *Allocating assets within priority categories.* Except for priority category 5, if the plan assets available for allocation to any priority category are insufficient to pay for all benefits in that priority category, those assets shall be distributed among the participants according to the ratio that the value of each participant's benefit or benefits in that priority category bears to the total value of all benefits in that priority category. If the plan assets available for allocation to priority category 5 are insufficient to pay for all benefits in that category, the assets shall be allocated, first, to the value of each participant's nonforfeitable benefits that would be assigned to priority category 5 under §4044.15 after reduction for the value of benefits assigned to higher priority categories, based only on the provisions of the plan in effect at the beginning of the 5-year period immediately preceding the termination date. If assets available for allocation to priority category 5 are sufficient to fully satisfy the value of those benefits, assets shall then be allocated to the value of the benefit increase under the oldest amendment during the 5-year period immediately preceding the termination date, reduced by the value of benefits assigned to higher priority categories (including higher subcategories in priority category 5). This allocation procedure shall be repeated for each succeeding plan amendment within the 5-year period until all plan assets available for allocation have been exhausted. If an amendment decreased benefits, amounts previously allocated with respect to each participant in excess of the value of the reduced benefit shall be reduced accordingly. In the subcategory in which assets are exhausted, the assets shall be distributed among the participants according to the ratio that the value of each participant's benefit or benefits in that subcategory bears to the total value of all benefits in that subcategory.

(f) *Applying assets to basic-type or nonbasic-type benefits within priority categories.* The assets allocated to a participant's benefit or benefits within each priority category shall first be applied to pay for the participant's basic-type benefit or benefits assigned to that priority category. Any assets allocated on behalf of that participant remaining after satisfying the participant's basic-type benefit or benefits in that priority category shall then be applied to pay for the participant's nonbasic-type benefit or benefits assigned to that priority category. If the assets allocable to a participant's basic-type benefit or benefits in all priority categories are insufficient to pay for all of the participant's guaranteed benefits, the assets allocated to that participant's benefit in priority category 4 shall be applied, first, to the guaranteed portion of the participant's

benefit in priority category 4. The remaining assets allocated to that participant's benefit in priority category 4, if any, shall be applied to the nonguaranteed portion of the participant's benefit.

(g) *Allocation to established subclasses.* Notwithstanding paragraphs (e) and (f) of this section, the assets of a plan that has established subclasses within any priority category may be allocated to the plan's subclasses in accordance with the rules set forth in § 4044.17.

[61 FR 34059, July 1, 1996, as amended at 76 FR 34605, June 14, 2011]

§ 4044.11 Priority category 1 benefits.

(a) *Definition.* The benefits in priority category 1 are participants' accrued benefits derived from voluntary employee contributions.

(b) *Assigning benefits.* Absent an election described in the next sentence, the benefit assigned to priority category 1 with respect to each participant is the balance of the separate account maintained for the participant's voluntary contributions. If a participant has elected to receive an annuity in lieu of his or her account balance, the benefit assigned to priority category 1 with respect to that participant is the present value of that annuity.

§ 4044.12 Priority category 2 benefits.

(a) *Definition.* The benefits in priority category 2 are participants' accrued benefits derived from mandatory employee contributions, whether to be paid as an annuity benefit with a pre-retirement death benefit that returns mandatory employee contributions or, if a participant so elects under the terms of the plan and subpart A of part 4022 of this chapter, as a lump sum benefit. Benefits are primarily basic-type benefits although nonbasic-type benefits may also be included as follows:

(1) *Basic-type benefits.* The basic-type benefit in priority category 2 with respect to each participant is the sum of the values of the annuity benefit and the pre-retirement death benefit determined under the provisions of paragraph (c)(1) of this section.

(2) *Nonbasic-type benefits.* If a participant elects to receive a lump sum benefit and if the value of the lump sum benefit exceeds the value of the basic-type benefit in priority category 2 determined with respect to the participant, the excess is a nonbasic-type benefit. There is no nonbasic-type benefit in priority category 2 for a participant who does not elect to receive a lump sum benefit.

(b) *Conversion of mandatory employee contributions to an annuity benefit.* Subject to the limitation set forth in paragraph (b)(3) of this section, a participant's accumulated mandatory employee contributions shall be converted to an annuity form of benefit payable at the normal retirement age or, if the plan provides for early retirement, at the expected retirement age. The conversion shall be made using the interest rates and factors specified in paragraph (b)(2) of this section. The form of the annuity benefit (e.g., straight life annuity, joint and survivor annuity, cash refund annuity, etc.) is the form that the participant or beneficiary is entitled to on the termination date. If the participant does not have a nonforfeitable right to a benefit, other than the return of his or her mandatory contributions in a lump sum, the annuity form of benefit is the form the participant would be entitled to if the participant had a nonforfeitable right to an annuity benefit under the plan on the termination date.

(1) *Accumulated mandatory employee contributions.* Subject to any addition for the cost of ancillary benefits plus interest, as provided in the following sentence, the amount of the accumulated mandatory employee contributions for each participant is the participant's total nonforfeitable mandatory employee contributions remaining in the plan on the termination date plus interest, if any, under the plan provisions. Mandatory employee contributions, if any, used after the effective date of the minimum vesting standards in section 203 of ERISA and section 411 of the Code for costs or to provide ancillary benefits such as life insurance or health insurance, plus interest under the plan provisions, shall be added to the contributions that remain in the plan to determine the accumulated mandatory employee contributions.

(2) *Interest rates and conversion factors.* The interest rates and conversion factors used in the administration of the plan shall be used to convert a participant's accumulated mandatory contributions to the annuity form of benefit. In the absence of plan rules and factors, the interest rates and conversion factors established by the IRS for allocation of accrued benefits between employer and employee contributions under the provisions of section 204(c) of ERISA and section 411(c) of the Code shall be used.

(3) *Minimum accrued benefit.* The annuity benefit derived from mandatory employee contributions may not be less than the minimum accrued benefit under the provisions of section 204(c) of ERISA and section 411(c) of the Code.

(c) *Assigning benefits.* If a participant or beneficiary elects to receive a lump sum benefit, his or her benefit shall be determined under paragraph (c)(2) of this section. Otherwise, the benefits with respect to a participant shall be determined under paragraph (c)(1) of this section.

(1) *Annuity benefit and pre-retirement death benefit.* The annuity benefit and the pre-retirement death benefit assigned to priority category 2 with respect to a participant are determined as follows:

(i) The annuity benefit is the benefit computed under paragraph (b) of this section.

(ii) Except for adjustments necessary to meet the minimum lump sum requirements as hereafter provided, the pre-retirement death benefit is the benefit under the plan that returns all or a portion of the participant's mandatory employee contributions upon the death of the participant before retirement. A benefit that became payable in a single installment (or substantially so) because the participant died before the termination date is a liability of the plan within the meaning of § 4044.3(a) and should not be assigned to priority category 2. A benefit payable upon a participant's death that is included in the annuity form of the benefit derived from mandatory employee contributions (e.g., the survivor's portion of a joint and survivor annuity or the cash refund portion of a cash refund annuity) is assigned to priority category 2 as part of the annuity benefit under paragraph (c)(1)(i) of this section and is not assigned as a death benefit. The pre-retirement death benefit may not be less than the minimum lump sum required upon withdrawal of mandatory employee contributions by the IRS under section 204(c) of ERISA and section 411(c) of the Code.

(2) *Lump sum benefit.* Except for adjustments necessary to meet the minimum lump sum requirements as hereafter provided, if a participant elects to receive a lump sum benefit under the provisions of the plan, the amount of the benefit that is assigned to priority category 2 with respect to the participant is—

(i) The combined value of the annuity benefit and the pre-retirement death benefit determined according to paragraph (c)(1) (which constitutes the basic-type benefit) plus

(ii) The amount, if any, of the participant's accumulated mandatory employee contributions that exceeds the combined value of the annuity benefit and the pre-retirement death benefit (which constitutes the nonbasic-type benefit), but not more than

(iii) The amount of the participant's accumulated mandatory contributions.

(3) For purposes of paragraph (c)(2) of this section, accumulated mandatory contributions means the contributions with interest, if any, payable under plan provisions to the participant or beneficiary on termination of the plan or, in the absence of such provisions, the amount that is payable if the participant withdrew his or her contributions on the termination date. The lump sum benefit may not be less than the minimum lump required by the IRS under section 204(c) of ERISA and section 411(c) of the Code upon withdrawal of mandatory employee contributions.

§ 4044.13 Priority category 3 benefits.

(a) *Definition.* The benefits in priority category 3 are those annuity benefits that were in pay status before the beginning of the 3-year period ending on the termination date, and those annuity benefits that could have been in pay status (then or as of the next payment date under the plan's rules for starting benefit payments) for participants who, before the beginning of the

3-year period ending on the termination date, had reached their Earliest PBGC Retirement Date (as determined under § 4022.10 of this chapter) based on plan provisions in effect on the day before the beginning of the 3-year period ending on the termination date. For example, in a plan with a termination date of September 1, 2012, the benefits in priority category 3 are those annuity benefits that were in pay status on or before September 1, 2009, and those annuity benefits that could have been in pay status for participants who, on or before September 1, 2009, had reached their Earliest PBGC Retirement Date based on plan provisions in effect on September 1, 2009. Benefit increases, as defined in § 4022.2, that were in effect throughout the 5-year period ending on the termination date, including automatic benefit increases during that period to the extent provided in paragraph (b)(5) of this section, shall be included in determining the priority category 3 benefit. For example, in a plan with a termination date of September 1, 2012, a benefit increase that was in effect throughout the 5-year period from September 2, 2007, to September 1, 2012, is included in priority category 3. Benefits are primarily basic-type benefits, although nonbasic-type benefits will be included if any portion of a participant's priority category 3 benefit is not guaranteeable under the provisions of subpart A of part 4022 and § 4022.21 of this chapter.

(b) *Assigning benefits.* The annuity benefit that is assigned to priority category 3 with respect to each participant is the lowest annuity that was paid or payable under the rules in paragraphs (b)(2) through (b)(6) of this section.

(1) *Eligibility of participants and beneficiaries.* A participant or beneficiary is eligible for a priority category 3 benefit if either of the following applies:

(i) The participant's (or beneficiary's) benefit was in pay status before the beginning of the 3-year period ending on the termination date.

(ii) Before the beginning of the 3-year period ending on the termination date, the participant was eligible for an annuity benefit that could have been in pay status and had reached his or her Earliest PBGC Retirement Date (as determined in § 4022.10 of this chapter, based on plan provisions in effect on the day before the beginning of the 3-year period ending on the termination date). Whether a participant was eligible to receive an annuity before the beginning of the 3-year period shall be determined using the plan provisions in effect on the day before the beginning of the 3-year period.

(iii) If a participant described in either of the preceding two paragraphs died during the 3-year period ending on the date of the plan termination and his or her beneficiary is entitled to an annuity, the beneficiary is eligible for a priority category 3 benefit.

(2) *Plan provisions governing determination of benefit.* In determining the amount of the priority category 3 annuity with respect to a participant, the plan administrator shall use the participant's age, service, actual or expected retirement age, and other relevant facts as of the following dates:

(i) Except as provided in paragraph (b)(3), for a participant or beneficiary whose benefit was in pay status before the beginning of the 3-year period ending on the termination date, the priority category 3 benefit shall be determined according to plan provisions in effect on the date the benefit commenced. The form of annuity elected by a retiree is considered the normal form of annuity for that participant.

(ii) Except as provided in paragraph (b)(3), for a participant who was eligible to receive an annuity before the beginning of the 3-year period ending on the termination date but whose benefit was not in pay status, the priority category 3 benefit and the normal form of annuity shall be determined according to plan provisions in effect on the day before the beginning of the 3-year period ending on the termination date as if the benefit had commenced at that time.

(3) *General benefit limitations.* The general benefit limitation is determined as follows:

(i) If a participant's benefit was in pay status before the beginning of the 3-year period, the benefit assigned to priority category 3 with respect to that participant is limited to the lesser of the lowest annuity benefit in pay status during the 3-year period ending on

the termination date and the lowest annuity benefit payable under the plan provisions at any time during the 5-year period ending on the termination date.

(ii) Unless a benefit was in pay status before the beginning of the 3-year period ending on the termination date, the benefit assigned to priority category 3 with respect to a participant is limited to the lowest annuity benefit payable under the plan provisions, including any reduction for early retirement, at any time during the 5-year period ending on the termination date. If the annuity form of benefit under a formula that appears to produce the lowest benefit differs from the normal annuity form for the participant under paragraph (b)(2)(ii) of this section, the benefits shall be compared after the differing form is converted to the normal annuity form, using plan factors. In the absence of plan factors, the factors in subpart B of part 4022 of this chapter shall be used.

(iii) For purposes of this paragraph, if a terminating plan has been in effect less than five years on the termination date, computed in accordance with paragraph (b)(6) of this section, the lowest annuity benefit under the plan during the 5-year period ending on the termination date is zero. If the plan is a successor to a previously established defined benefit plan within the meaning of section 4021(a) of ERISA, the time it has been in effect will include the time the predecessor plan was in effect.

(4) *Determination of beneficiary's benefit.* If a beneficiary is eligible for a priority category 3 benefit because of the death of a participant during the 3-year period ending on the termination date, the benefit assigned to priority category 3 for the beneficiary shall be determined as if the participant had died the day before the 3-year period began.

(5) *Automatic benefit increases.* If plan provisions adopted and effective on or before the first day of the 5-year period ending on the termination date provided for automatic increases in the benefit formula for both active participants and those in pay status or for participants in pay status only, the lowest annuity benefit payable during the 5-year period ending on the termination date determined under paragraph (b)(3) of this section includes the automatic increases scheduled during the fourth and fifth years preceding termination, subject to the restriction that benefit increases for active participants in excess of the increases for retirees shall not be taken into account.

(6) *Computation of time periods.* For purposes of this section, a plan or amendment is ''in effect'' on the later of the date on which it is adopted or the date it becomes effective.

(c) *PPA 2006 bankruptcy termination.* In a PPA 2006 bankruptcy termination:

(1) For purposes of this paragraph (c), ''applicable pre-termination period'' means the period—

(i) Beginning on the first day of the 5-year period ending on the bankruptcy filing date; and

(ii) Ending on the termination date. For example, if the bankruptcy filing date is January 15, 2008, and the termination date is March 22, 2009, the applicable pre-termination period is the period beginning on January 16, 2003, and ending on March 22, 2009.

(2) ''Applicable pre-termination period'' is substituted for ''5-year period ending on the termination date'' each place that ''5-year period ending on the termination date'' appears in paragraphs (a) and (b) of this section.

(3) Except as provided in paragraph (a)(2) of this section, ''bankruptcy filing date'' is substituted for ''termination date'' and ''date of the plan termination'' each place that ''termination date'' and ''date of the plan termination'' appear in paragraphs (a) and (b) of this section. In paragraph (b)(5) of this section, ''the bankruptcy filing date'' is substituted for ''termination'' in the phrase ''during the fourth and fifth years preceding termination.''

(4) Example: A plan provides for normal retirement at age 65 and has only one early retirement benefit: a subsidized early retirement benefit for participants who terminate employment on or after age 60 with 20 years of service. These plan provisions have been unchanged since 1990. The contributing sponsor of the plan files a bankruptcy petition in June 2008, and the plan terminates during the bankruptcy with a termination date in September

2010. A participant retired in July 2007, at which time he was age 60 and had 20 years of service, and began receiving the subsidized early retirement benefit. The participant has no benefit in priority category 3, because he was not eligible to retire three or more years before the June 2008 bankruptcy filing date.

[61 FR 34059, July 1, 1996, as amended at 62 FR 67729, Dec. 30, 1997; 67 FR 16959, Apr. 8, 2002; 67 FR 38003, May 31, 2002; 76 FR 34605, June 14, 2011]

§ 4044.14 Priority category 4 benefits.

The benefits assigned to priority category 4 with respect to each participant are the participant's guaranteed benefits, except as provided in the next sentence. The benefit assigned to priority category 4 with respect to a participant is not limited by the aggregate benefits limitations set forth in § 4022B.1 of this chapter for individuals who are participants in more than one plan or by the phase-in limitation applicable to substantial owners set forth in § 4022.26.

[61 FR 34059, July 1, 1996, as amended at 76 FR 34606, June 14, 2011]

§ 4044.15 Priority category 5 benefits.

The benefits assigned to priority category 5 with respect to each participant are all of the participant's nonforfeitable benefits under the plan.

§ 4044.16 Priority category 6 benefits.

The benefits assigned to priority category 6 with respect to each participant are all of the participant's benefits under the plan, whether forfeitable or nonforfeitable.

§ 4044.17 Subclasses.

(a) *General rule*. A plan may establish one or more subclasses within any priority category, other than priority categories 1 and 2, which subclasses will govern the allocation of assets within that priority category. The subclasses may be based only on a participant's longer service, older age, or disability, or any combination thereof.

(b) *Limitation*. Except as provided in paragraph (c) of this section, whenever the allocation within a priority category on the basis of the subclasses established by the plan increases or decreases the cumulative amount of assets that otherwise would be allocated to guaranteed benefits, the assets so shifted shall be reallocated to other participants' benefits within the priority category in accordance with the subclasses.

(c) *Exception for subclasses in effect on September 2, 1974*. A plan administrator may allocate assets to subclasses within any priority category, other than priority categories 1 and 2, without regard to the limitation in paragraph (b) of this section if, on September 2, 1974, the plan provided for allocation of plan assets upon termination of the plan based on a participant's longer service, older age, or disability, or any combination thereof, and—

(1) Such provisions are still in effect; or

(2) The plan, if subsequently amended to modify or remove those subclasses, is re-amended to re-establish the same subclasses on or before July 28, 1981.

(d) *Discrimination under Code*. Notwithstanding the provisions of paragraphs (a) through (c) of this section, allocation of assets to subclasses established under this section is permitted only to the extent that the allocation does not result in discrimination prohibited under the Code and regulations thereunder.

ALLOCATION OF RESIDUAL ASSETS

§ 4044.30 [Reserved]

Subpart B—Valuation of Benefits and Assets

GENERAL PROVISIONS

§ 4044.41 General valuation rules.

(a) *Valuation of benefits*—(1) *Trusteed plans*. The plan administrator of a plan that has been or will be placed into trusteeship by the PBGC shall value plan benefits in accordance with §§ 4044.51 through 4044.57.

(2) *Non-trusteed plans*. The plan administrator of a non-trusteed plan shall value plan benefits in accordance with §§ 4044.71 through 4044.75. If a plan is unable to satisfy all benefits assigned to priority categories 1 through 4 on the distribution date, the PBGC

will place it into trusteeship and the plan administrator shall re-value the benefits in accordance with §§ 4044.51 through 4044.57.

(b) *Valuation of assets.* Plan assets shall be valued at their fair market value, based on the method of valuation that most accurately reflects such fair market value.

[61 FR 34059, July 1, 1996, as amended at 76 FR 34606, June 14, 2011]

TRUSTEED PLANS

§ 4044.51 Benefits to be valued.

(a) *Form of benefit.* The plan administrator shall determine the form of each benefit to be valued in accordance with the following rules:

(1) If a benefit is in pay status as of the valuation date, the plan administrator shall value the form of the benefit being paid.

(2) If a benefit is not in pay status as of the valuation date but a valid election with respect to the form of benefit has been made on or before the valuation date, the plan administrator shall value the form of benefit so elected.

(3) If a benefit is not in pay status as of the valuation date and no valid election with respect to the form of benefit has been made on or before the valuation date, the plan administrator shall value the form of benefit that, under the terms of the plan, is payable in the absence of a valid election.

(b) *Timing of benefit.* The plan administrator shall value benefits whose starting date is subject to election using the assumption specified in paragraph (b)(1) or (b)(2) of this section.

(1) *Where election made.* If a valid election of the starting date of a benefit has been made on or before the valuation date, the plan administrator shall assume that the starting date of the benefit is the starting date so elected.

(2) *Where no election made.* If no valid election of the starting date of a benefit has been made on or before the valuation date, the plan administrator shall assume that the starting date of the benefit is the later of—

(i) The expected retirement age, as determined under §§ 4044.55 through 4044.57, of the participant with respect to whom the benefit is payable, or

(ii) The valuation date.

§ 4044.52 Valuation of benefits.

The plan administrator shall value all benefits as of the valuation date by—

(a) Using the mortality assumptions prescribed by § 4044.53 and the interest assumptions prescribed in appendix B to this part;

(b) Using interpolation methods, where necessary, at least as accurate as linear interpolation;

(c) Using valuation formulas that accord with generally accepted actuarial principles and practices; and

(d) Adjusting the values to reflect loading expenses in accordance with appendix C to this part.

[65 FR 14753, Mar. 17, 2000, as amended at 70 FR 72207, Dec. 2, 2005]

§ 4044.53 Mortality assumptions.

(a) *General rule.* Subject to paragraph (b) of this section (regarding certain death benefits), the plan administrator shall use the mortality factors prescribed in paragraphs (c), (d), (e), (f), and (g) of this section to value benefits under § 4044.52.

(b) *Certain death benefits.* If an annuity for one person is in pay status on the valuation date, and if the payment of a death benefit after the valuation date to another person, who need not be identifiable on the valuation date, depends in whole or in part on the death of the pay status annuitant, then the plan administrator shall value the death benefit using—

(1) The mortality rates that are applicable to the annuity in pay status under this section to represent the mortality of the pay status annuitant; and

(2) The mortality rates under paragraph (c) of this section to represent the mortality of the death beneficiary.

(c) *Healthy lives.* If the individual is not disabled under paragraph (f) of this section, the plan administrator will value the benefit using—

(1) For male participants, the rates in Table 1 of Appendix A to this part projected from 1994 to the calendar

year in which the valuation date occurs plus 10 years using Scale AA from Table 2 of Appendix A to this part; and

(2) For female participants, the rates in Table 3 of Appendix A to this part projected from 1994 to the calendar year in which the valuation date occurs plus 10 years using Scale AA from Table 4 of Appendix A to this part.

(d) *Social Security disabled lives.* If the individual is Social Security disabled under paragraph (f)(1) of this section, the plan administrator will value the benefit using—

(1) For male participants, the rates in Table 5 of Appendix A to this part; and

(2) For female participants, the rates in Table 6 of Appendix A to this part.

(e) Non-Social Security disabled lives. If the individual is non-Social Security disabled under paragraph (f)(2) of this section, the plan administrator will value the benefit at each age using—

(1) For male participants, the lesser of—

(i) The rate determined from Table 1 of Appendix A to this part projected from 1994 to the calendar year in which the valuation date occurs plus 10 years using Scale AA from Table 2 of Appendix A to this part and setting the resulting table forward three years, or

(ii) The rate in Table 5 of Appendix A to this part.

(2) For female participants, the lesser of—

(i) The rate determined from Table 3 of Appendix A to this part projected from 1994 to the calendar year in which the valuation date occurs plus 10 years using Scale AA from Table 4 of Appendix A to this part and setting the resulting table forward three years, or

(ii) The rate in Table 6 of Appendix A to this part.

(f) *Definitions of disability.*

(1) *Social Security disabled.* A participant is Social Security disabled if, on the valuation date, the participant is less than age 65 and has a benefit in pay status that—

(i) Is being received as a disability benefit under a plan provision requiring either receipt of or eligibility for Social Security disability benefits, or

(ii) Was converted under the plan's terms from a disability benefit under a plan provision requiring either receipt of or eligibility for Social Security disability benefits to an early or normal retirement benefit for any reason other than a change in the participant's health status.

(2) *Non-Social Security disabled.* A participant is non-Social Security disabled if, on the valuation date, the participant is less than age 65, is not Social Security disabled, and has a benefit in pay status that—

(i) Is being received as a disability benefit under the plan, or

(ii) Was converted under the plan's terms from a disability benefit to an early or normal retirement benefit for any reason other than a change in the participant's health status.

(g) *Contingent annuitant mortality during deferral period.* If a participant's joint and survivor benefit is valued as a deferred annuity, the mortality of the contingent annuitant during the deferral period will be disregarded.

[70 FR 72207, Dec. 2, 2005]

§ 4044.54 [Reserved]

EXPECTED RETIREMENT AGE

§ 4044.55 XRA when a participant must retire to receive a benefit.

(a) *Applicability.* Except as provided in § 4044.57, the plan administrator shall determine the XRA under this section when plan provisions or established plan practice require a participant to retire from his or her job to begin receiving an early retirement benefit.

(b) *Data needed.* The plan administrator shall determine for each participant who is entitled to an early retirement benefit—

(1) The amount of the participant's monthly benefit payable at unreduced retirement age in the normal form payable under the terms of the plan or in the form validly elected by the participant before the termination date;

(2) The calendar year in which the participant reaches unreduced retirement age (''URA'');

(3) The participant's URA; and

(4) The participant's earliest retirement age at the valuation date.

(c) *Procedure*. (1) The plan administrator shall determine whether a participant is in the high, medium or low retirement rate category using the applicable Selection of Retirement Rate Category Table in appendix D, based on the participant's benefit determined under paragraph (b)(1) of this section and the year in which the participant reaches URA.

(2) Based on the retirement rate category determined under paragraph (c)(1), the plan administrator shall determine the XRA from Table II-A, II-B or II-C, as appropriate, by using the participant's URA and earliest retirement age at valuation date.

§ 4044.56 XRA when a participant need not retire to receive a benefit.

(a) *Applicability*. Except as provided in § 4044.57, the plan administrator shall determine the XRA under this section when plan provisions or established plan practice do not require a participant to retire from his or her job to begin receiving his or her early retirement benefit.

(b) *Data needed*. The plan administrator shall determine for each participant—

(1) The participant's URA; and

(2) The participant's earliest retirement age at valuation date.

(c) *Procedure*. Participants in this case are always assigned to the high retirement rate category and therefore the plan administrator shall use Table II-C of appendix D to determine the XRA. The plan administrator shall determine the XRA from Table II-C by using the participant's URA and earliest retirement age at termination date.

§ 4044.57 Special rule for facility closing.

(a) *Applicability*. The plan administrator shall determine the XRA under this section, rather than § 4044.55 or § 4044.56, when both the conditions set forth in paragraphs (a)(1) and (a)(2) of this section exist.

(1) The facility at which the participant is or was employed permanently closed within one year before the valuation date, or is in the process of being permanently closed on the valuation date.

(2) The participant left employment at the facility less than one year before the valuation date or was still employed at the facility on the valuation date.

(b) *XRA*. The XRA is equal to the earliest retirement age at valuation date.

NON-TRUSTEED PLANS

§ 4044.71 Valuation of annuity benefits.

The value of a benefit which is to be paid as an annuity is the cost of purchasing the annuity on the date of distribution from an insurer.

[61 FR 34059, July 1, 1996, as amended at 76 FR 34606, June 14, 2011]

§ 4044.72 Form of annuity to be valued.

(a) When both the participant and beneficiary are alive on the date of distribution, the form of annuity to be valued is—

(1) For a participant or beneficiary already receiving a monthly benefit, that form which is being received, or

(2) For a participant or beneficiary not receiving a monthly benefit, the normal annuity form payable under the plan or the optional form for which the participant has made a valid election.

(b) When the participant dies after the date of plan termination but before the date of distribution, the form of annuity to be valued is determined under paragraph (b)(1) or (b)(2) of this section:

(1) For a participant who was entitled to a deferred annuity—

(i) If the form was a single or joint life annuity, no benefit shall be valued; or

(ii) If the participant had made a valid election of a lump sum benefit before he or she died, the form to be valued is the lump sum.

(2) For a participant who was eligible for immediate retirement, and for a participant who was in pay status at the date of termination—

(i) If the form was a single life annuity, no benefit shall be valued;

(ii) If the form was an annuity for a period certain and life thereafter, the form to be valued is an annuity for the certain period;

(iii) If the form was a joint and survivor annuity, the form to be valued is

a single life annuity payable to the beneficiary, unless the beneficiary has also died, in which case no benefit shall be valued;

(iv) If the form was an annuity for a period certain and joint and survivor thereafter, the form to be valued is an annuity for the certain period and the life of the beneficiary thereafter, unless the beneficiary has also died, in which case the form to be valued is an annuity for the certain period;

(v) If the form was a cash refund annuity, the form to be valued is the remaining lump sum death benefit; or

(vi) If the participant had elected a lump sum benefit before he or she died, the form to be valued is the lump sum.

(c) When the participant is still living and the named beneficiary or spouse dies after the date of termination but before the date of distribution, the form of annuity to be valued is determined under paragraph (c)(1) or (c)(2) of this section:

(1) For a participant entitled to a deferred annuity—

(i) If the form was a joint and survivor annuity, the form to be valued is a single life annuity payable to the participant; or

(ii) If the form was an annuity for a period certain and joint and survivor thereafter, the form to be valued is an annuity for the certain period and the life of the participant thereafter.

(2) For a participant eligible for immediate retirement and for a participant in pay status at the date of termination—

(i) If the form was a joint and survivor annuity, the form to be valued is a single life annuity payable to the participant; or

(ii) If the form was an annuity for a period certain and joint survivor thereafter annuity, the form to be valued is an annuity for the certain period and for the life of the participant thereafter.

[61 FR 34059, July 1, 1996, as amended at 76 FR 34606, June 14, 2011]

§ 4044.73 Lump sums and other alternative forms of distribution in lieu of annuities.

(a) *Valuation.* (1) The value of the lump sum or other alternative form of distribution is the present value of the normal form of benefit provided by the plan payable at normal retirement age, determined as of the date of distribution using reasonable actuarial assumptions as to interest and mortality.

(2) If the participant dies before the date of distribution, but had elected a lump sum benefit, the present value shall be determined as if the participant were alive on the date of distribution.

(b) *Actuarial assumptions.* The plan administrator shall specify the actuarial assumptions used to determine the value calculated under paragraph (a) of this section when the plan administrator submits the benefit valuation data to the PBGC. The same actuarial assumptions shall be used for all such calculations. The PBGC reserves the right to review the actuarial assumptions used and to re-value the benefits determined by the plan administrator if the actuarial assumptions are found to be unreasonable.

[61 FR 34059, July 1, 1996, as amended at 76 FR 34606, June 14, 2011]

§ 4044.74 Withdrawal of employee contributions.

(a) If a participant has not started to receive monthly benefit payments on the date of distribution, the value of the lump sum which returns mandatory employee contributions is equal to the total amount of contributions made by the participant, plus interest that is payable to the participant under the terms of the plan, plus interest on that total amount from the date of termination to the date of distribution. The rate of interest credited on employee contributions up to the date of termination shall be the greater of the interest rate provided under the terms of the plan or the interest rate required under section 204(c) of ERISA or section 411(c) of the IRC.

(b) If a participant has started to receive monthly benefit payments on the date of distribution, part of which are attributable to his or her contributions, the value of the lump sum which returns employee contributions is equal to the excess of the amount described in paragraph (b)(1) of this section over the amount computed in paragraph (b)(2) of this section.

(1) The amount of accumulated mandatory employee contributions remaining in the plan as of the date of termination plus interest from the date of termination to the date of distribution.

(2) The excess of benefit payments made from the plan between date of plan termination and the date of distribution, over the amount of payments that would have been made if the employee contributions had been paid as a lump sum on the date of plan termination, with interest accumulated on the excess from the date of payment to the date of distribution.

(c) *Interest assumptions.* The interest rate used under this section to credit interest between the date of termination to the date of distribution shall be a reasonable rate and shall be the same for both paragraphs (a) and (b).

§ 4044.75 Other lump sum benefits.

The value of a lump sum benefit which is not covered under § 4044.73 or § 4044.74 is equal to—

(a) The value under the irrevocable commitment, if an insurer provides the benefit; or

(b) The present value of the benefit as of the date of distribution, determined using reasonable actuarial assumptions, if the benefit is to be distributed other than by the purchase of the benefit from an insurer. The PBGC reserves the right to review the actuarial assumptions as to reasonableness and re-value the benefit if the actuarial assumptions are unreasonable.

[61 FR 34059, July 1, 1996, as amended at 76 FR 34606, June 14, 2011]

APPENDIX A TO PART 4044—MORTALITY RATE TABLES

The mortality tables in this appendix set forth for each age x the probability q_x that an individual aged x (in 1994, when using Table 1 or Table 3) will not survive to attain age x + 1. The projection scales in this appendix set forth for each age x the annual reduction AA_x in the mortality rate at age x.

TABLE 1—MORTALITY TABLE FOR HEALTHY MALE PARTICIPANTS

[94 GAM basic]

Age x	q_x
15	0.000371
16	0.000421
17	0.000463
18	0.000495
19	0.000521
20	0.000545
21	0.000570
22	0.000598
23	0.000633
24	0.000671
25	0.000711
26	0.000749
27	0.000782
28	0.000811
29	0.000838
30	0.000862
31	0.000883
32	0.000902
33	0.000912
34	0.000913
35	0.000915
36	0.000927
37	0.000958
38	0.001010
39	0.001075
40	0.001153
41	0.001243
42	0.001346
43	0.001454
44	0.001568
45	0.001697
46	0.001852
47	0.002042
48	0.002260
49	0.002501
50	0.002773
51	0.003088
52	0.003455
53	0.003854
54	0.004278
55	0.004758
56	0.005322
57	0.006001
58	0.006774
59	0.007623
60	0.008576
61	0.009663
62	0.010911
63	0.012335
64	0.013914
65	0.015629
66	0.017462
67	0.019391
68	0.021354
69	0.023364
70	0.025516
71	0.027905
72	0.030625
73	0.033549
74	0.036614
75	0.040012
76	0.043933
77	0.048570
78	0.053991
79	0.060066
80	0.066696
81	0.073780
82	0.081217
83	0.088721
84	0.096358
85	0.104559
86	0.113755
87	0.124377

TABLE 1—MORTALITY TABLE FOR HEALTHY MALE PARTICIPANTS—Continued

[94 GAM basic]

Age x	q_x
88	0.136537
89	0.149949
90	0.164442
91	0.179849
92	0.196001
93	0.213325
94	0.231936
95	0.251189
96	0.270441
97	0.289048
98	0.306750
99	0.323976
100	0.341116
101	0.358560
102	0.376699
103	0.396884
104	0.418855
105	0.440585
106	0.460043
107	0.475200
108	0.485670
109	0.492807
110	0.497189
111	0.499394
112	0.500000
113	0.500000
114	0.500000
115	0.500000
116	0.500000
117	0.500000
118	0.500000
119	0.500000
120	1.000000

TABLE 2—PROJECTION SCALE AA FOR HEALTHY MALE PARTICIPANTS

Age x	AA_x
15	0.019
16	0.019
17	0.019
18	0.019
19	0.019
20	0.019
21	0.018
22	0.017
23	0.015
24	0.013
25	0.010
26	0.006
27	0.005
28	0.005
29	0.005
30	0.005
31	0.005
32	0.005
33	0.005
34	0.005
35	0.005
36	0.005
37	0.005
38	0.006
39	0.007
40	0.008
41	0.009
42	0.010
43	0.011

TABLE 2—PROJECTION SCALE AA FOR HEALTHY MALE PARTICIPANTS—Continued

Age x	AA_x
44	0.012
45	0.013
46	0.014
47	0.015
48	0.016
49	0.017
50	0.018
51	0.019
52	0.020
53	0.020
54	0.020
55	0.019
56	0.018
57	0.017
58	0.016
59	0.016
60	0.016
61	0.015
62	0.015
63	0.014
64	0.014
65	0.014
66	0.013
67	0.013
68	0.014
69	0.014
70	0.015
71	0.015
72	0.015
73	0.015
74	0.015
75	0.014
76	0.014
77	0.013
78	0.012
79	0.011
80	0.010
81	0.009
82	0.008
83	0.008
84	0.007
85	0.007
86	0.007
87	0.006
88	0.005
89	0.005
90	0.004
91	0.004
92	0.003
93	0.003
94	0.003
95	0.002
96	0.002
97	0.002
98	0.001
99	0.001
100	0.001
101	0.000
102	0.000
103	0.000
104	0.000
105	0.000
106	0.000
107	0.000
108	0.000
109	0.000
110	0.000
111	0.000
112	0.000
113	0.000
114	0.000

TABLE 2—PROJECTION SCALE AA FOR HEALTHY MALE PARTICIPANTS—Continued

Age x	AA_x
115	0.000
116	0.000
117	0.000
118	0.000
119	0.000
120	0.000

TABLE 3—MORTALITY TABLE FOR HEALTHY FEMALE PARTICIPANTS

[94 GAM Basic]

Age x	q_x
15	0.000233
16	0.000261
17	0.000281
18	0.000293
19	0.000301
20	0.000305
21	0.000308
22	0.000311
23	0.000313
24	0.000313
25	0.000313
26	0.000316
27	0.000324
28	0.000338
29	0.000356
30	0.000377
31	0.000401
32	0.000427
33	0.000454
34	0.000482
35	0.000514
36	0.000550
37	0.000593
38	0.000643
39	0.000701
40	0.000763
41	0.000826
42	0.000888
43	0.000943
44	0.000992
45	0.001046
46	0.001111
47	0.001196
48	0.001297
49	0.001408
50	0.001536
51	0.001686
52	0.001864
53	0.002051
54	0.002241
55	0.002466
56	0.002755
57	0.003139
58	0.003612
59	0.004154
60	0.004773
61	0.005476
62	0.006271
63	0.007179
64	0.008194
65	0.009286
66	0.010423
67	0.011574
68	0.012648
69	0.013665
70	0.014763

TABLE 3—MORTALITY TABLE FOR HEALTHY FEMALE PARTICIPANTS—Continued

[94 GAM Basic]

Age x	q_x
71	0.016079
72	0.017748
73	0.019724
74	0.021915
75	0.024393
76	0.027231
77	0.030501
78	0.034115
79	0.038024
80	0.042361
81	0.047260
82	0.052853
83	0.058986
84	0.065569
85	0.072836
86	0.081018
87	0.090348
88	0.100882
89	0.112467
90	0.125016
91	0.138442
92	0.152660
93	0.167668
94	0.183524
95	0.200229
96	0.217783
97	0.236188
98	0.255605
99	0.276035
100	0.297233
101	0.318956
102	0.340960
103	0.364586
104	0.389996
105	0.415180
106	0.438126
107	0.456824
108	0.471493
109	0.483473
110	0.492436
111	0.498054
112	0.500000
113	0.500000
114	0.500000
115	0.500000
116	0.500000
117	0.500000
118	0.500000
119	0.500000
120	1.000000

TABLE 4—PROJECTION SCALE AA FOR HEALTHY FEMALE PARTICIPANTS

Age x	AA_x
15	0.016
16	0.015
17	0.014
18	0.014
19	0.015
20	0.016
21	0.017
22	0.017
23	0.016
24	0.015
25	0.014
26	0.012

TABLE 4—PROJECTION SCALE AA FOR HEALTHY FEMALE PARTICIPANTS—Continued

Age x	AA_x
27	0.012
28	0.012
29	0.012
30	0.010
31	0.008
32	0.008
33	0.009
34	0.010
35	0.011
36	0.012
37	0.013
38	0.014
39	0.015
40	0.015
41	0.015
42	0.015
43	0.015
44	0.015
45	0.016
46	0.017
47	0.018
48	0.018
49	0.018
50	0.017
51	0.016
52	0.014
53	0.012
54	0.010
55	0.008
56	0.006
57	0.005
58	0.005
59	0.005
60	0.005
61	0.005
62	0.005
63	0.005
64	0.005
65	0.005
66	0.005
67	0.005
68	0.005
69	0.005
70	0.005
71	0.006
72	0.006
73	0.007
74	0.007
75	0.008
76	0.008
77	0.007
78	0.007
79	0.007
80	0.007
81	0.007
82	0.007
83	0.007
84	0.007
85	0.006
86	0.005
87	0.004
88	0.004
89	0.003
90	0.003
91	0.003
92	0.003
93	0.002
94	0.002
95	0.002
96	0.002
97	0.001

TABLE 4—PROJECTION SCALE AA FOR HEALTHY FEMALE PARTICIPANTS—Continued

Age x	AA_x
98	0.001
99	0.001
100	0.001
101	0.000
102	0.000
103	0.000
104	0.000
105	0.000
106	0.000
107	0.000
108	0.000
109	0.000
110	0.000
111	0.000
112	0.000
113	0.000
114	0.000
115	0.000
116	0.000
117	0.000
118	0.000
119	0.000
120	0.000

TABLE 5—MORTALITY TABLE FOR SOCIAL SECURITY DISABLED MALE PARTICIPANTS

Age x	q_x
15	0.022010
16	0.022502
17	0.023001
18	0.023519
19	0.024045
20	0.024583
21	0.025133
22	0.025697
23	0.026269
24	0.026857
25	0.027457
26	0.028071
27	0.028704
28	0.029345
29	0.029999
30	0.030661
31	0.031331
32	0.032006
33	0.032689
34	0.033405
35	0.034184
36	0.034981
37	0.035796
38	0.036634
39	0.037493
40	0.038373
41	0.039272
42	0.040189
43	0.041122
44	0.042071
45	0.043033
46	0.044007
47	0.044993
48	0.045989
49	0.046993
50	0.048004
51	0.049021
52	0.050042
53	0.051067
54	0.052093
55	0.053120

TABLE 5—MORTALITY TABLE FOR SOCIAL SECURITY DISABLED MALE PARTICIPANTS—Continued

Age x	q_x
56	0.054144
57	0.055089
58	0.056068
59	0.057080
60	0.058118
61	0.059172
62	0.060232
63	0.061303
64	0.062429
65	0.063669
66	0.065082
67	0.066724
68	0.068642
69	0.070834
70	0.073284
71	0.075979
72	0.078903
73	0.082070
74	0.085606
75	0.088918
76	0.092208
77	0.095625
78	0.099216
79	0.103030
80	0.107113
81	0.111515
82	0.116283
83	0.121464
84	0.127108
85	0.133262
86	0.139974
87	0.147292
88	0.155265
89	0.163939
90	0.173363
91	0.183585
92	0.194653
93	0.206615
94	0.219519
95	0.234086
96	0.248436
97	0.263954
98	0.280803
99	0.299154
100	0.319185
101	0.341086
102	0.365052
103	0.393102
104	0.427255
105	0.469531
106	0.521945
107	0.586518
108	0.665268
109	0.760215
110	1.000000

TABLE 6—MORTALITY TABLE FOR SOCIAL SECURITY DISABLED FEMALE PARTICIPANTS

Age x	q_x
15	0.007777
16	0.008120
17	0.008476
18	0.008852
19	0.009243
20	0.009650
21	0.010076

TABLE 6—MORTALITY TABLE FOR SOCIAL SECURITY DISABLED FEMALE PARTICIPANTS—Continued

Age x	q_x
22	0.010521
23	0.010984
24	0.011468
25	0.011974
26	0.012502
27	0.013057
28	0.013632
29	0.014229
30	0.014843
31	0.015473
32	0.016103
33	0.016604
34	0.017121
35	0.017654
36	0.018204
37	0.018770
38	0.019355
39	0.019957
40	0.020579
41	0.021219
42	0.021880
43	0.022561
44	0.023263
45	0.023988
46	0.024734
47	0.025504
48	0.026298
49	0.027117
50	0.027961
51	0.028832
52	0.029730
53	0.030655
54	0.031609
55	0.032594
56	0.033608
57	0.034655
58	0.035733
59	0.036846
60	0.037993
61	0.039176
62	0.040395
63	0.041653
64	0.042950
65	0.044287
66	0.045666
67	0.046828
68	0.048070
69	0.049584
70	0.051331
71	0.053268
72	0.055356
73	0.057573
74	0.059979
75	0.062574
76	0.065480
77	0.068690
78	0.072237
79	0.076156
80	0.080480
81	0.085243
82	0.090480
83	0.096224
84	0.102508
85	0.109368
86	0.116837
87	0.124948
88	0.133736
89	0.143234
90	0.153477
91	0.164498

TABLE 6—MORTALITY TABLE FOR SOCIAL SECURITY DISABLED FEMALE PARTICIPANTS—Continued

Age x	q_x
92	0.176332
93	0.189011
94	0.202571
95	0.217045
96	0.232467
97	0.248870
98	0.266289
99	0.284758
100	0.303433
101	0.327385
102	0.359020
103	0.395842
104	0.438360
105	0.487816
106	0.545886
107	0.614309
108	0.694884
109	0.789474
110	1.000000

[70 FR 72208, Dec. 2, 2005; 70 FR 73330, Dec. 9, 2005]

APPENDIX B TO PART 4044—INTEREST RATES USED TO VALUE BENEFITS

[This table sets forth, for each indicated calendar month, the interest rates (denoted by i_1, i_2, . . ., and referred to generally as i_t) assumed to be in effect between specified anniversaries of a valuation date that occurs within that calendar month; those anniversaries are specified in the columns adjacent to the rates. The last listed rate is assumed to be in effect after the last listed anniversary date.]

For valuation dates occurring in the month—	The values of i_t are:					
	i_t	for t=	i_t	for t=	i_t	for t=
November 1993	.0560	1–25	.0525	>	N/A	N/A
December 1993	.0560	1–25	.0525	>25	N/A	N/A
January 1994	.0590	1–25	.0525	>25	N/A	N/A
February 1994	.0590	1–25	.0525	>25	N/A	N/A
March 1994	.0580	1–25	.0525	>25	N/A	N/A
April 1994	.0620	1–25	.0525	>25	N/A	N/A
May 1994	.0650	1–25	.0525	>25	N/A	N/A
June 1994	.0670	1–25	.0525	>25	N/A	N/A
July 1994	.0690	1–25	.0525	>25	N/A	N/A
August 1994	.0700	1–25	.0525	>25	N/A	N/A
September 1994	.0690	1–25	.0525	>25	N/A	N/A
October 1994	.0700	1–25	.0525	>25	N/A	N/A
November 1994	.0730	1–25	.0525	>25	N/A	N/A
December 1994	.0750	1–25	.0525	>25	N/A	N/A
January 1995	.0750	1–20	.0575	>20	N/A	N/A
February 1995	.0730	1–20	.0575	>20	N/A	N/A
March 1995	.0730	1–20	.0575	>20	N/A	N/A
April 1995	.0710	1–20	.0575	>20	N/A	N/A
May 1995	.0690	1–20	.0575	>20	N/A	N/A
June 1995	.0680	1–20	.0575	>20	N/A	N/A
July 1995	.0630	1–20	.0575	>20	N/A	N/A
August 1995	.0620	1–20	.0575	>20	N/A	N/A
September 1995	.0640	1–20	.0575	>20	N/A	N/A
October 1995	.0630	1–20	.0575	>20	N/A	N/A
November 1995	.0620	1–20	.0575	>20	N/A	N/A
December 1995	.0600	1–20	.0575	>20	N/A	N/A
January 1996	.0560	1–20	.0475	>20	N/A	N/A
February 1996	.0540	1–20	.0475	>20	N/A	N/A
March 1996	.0550	1–20	.0475	>20	N/A	N/A
April 1996	.0580	1–20	.0475	>20	N/A	N/A
May 1996	.0600	1–20	.0475	>20	N/A	N/A
June 1996	.0620	1–20	.0475	>20	N/A	N/A
July 2006	.0630	1–20	.0475	>20	N/A	N/A
August 1996	.0630	1–20	.0475	>20	N/A	N/A
September 1996	.0630	1–20	.0475	>20	N/A	N/A
October 1996	.0630	1–20	.0475	>20	N/A	N/A
November 1996	.0620	1–20	.0475	>20	N/A	N/A
December 1996	.0600	1–20	.0475	>20	N/A	N/A
January 1997	.0580	1–25	.0500	>25	N/A	N/A
February 1997	.0590	1–25	.0500	>25	N/A	N/A
March 1997	.0620	1–25	.0500	>25	N/A	N/A
April 1997	.0610	1–25	.0500	>25	N/A	N/A
May 1997	.0630	1–25	.0500	>25	N/A	N/A

For valuation dates occurring in the month—	The values of i_t are:					
	i_t	for t=	i_t	for t=	i_t	for t=
June 1997	.0640	1–25	.0500	>25	N/A	N/A
July 1997	.0630	1–25	.0500	>25	N/A	N/A
August 1997	.0610	1–25	.0500	>25	N/A	N/A
September 1997	.0570	1–25	.0500	>25	N/A	N/A
October 1997	.0590	1–25	.0500	>25	N/A	N/A
November 1997	.0570	1–25	.0500	>25	N/A	N/A
December 1997	.0560	1–25	.0500	>25	N/A	N/A
January 1998	.0560	1–25	.0525	>25	N/A	N/A
February 1998	.0550	1–25	.0525	>25	N/A	N/A
March 1998	.0550	1–25	.0525	>25	N/A	N/A
April 1998	.0550	1–25	.0525	>25	N/A	N/A
May 1998	.0560	1–25	.0525	>25	N/A	N/A
June 1998	.0560	1–25	.0525	>25	N/A	N/A
July 1998	.0550	1–25	.0525	>25	N/A	N/A
August 1998	.0540	1–25	.0525	>25	N/A	N/A
September 1998	.0540	1–25	.0525	>25	N/A	N/A
October 1998	.0540	1–25	.0525	>25	N/A	N/A
November 1998	.0530	1–25	.0525	>25	N/A	N/A
December 1998	.0540	1–25	.0525	>25	N/A	N/A
January 1999	.0530	1–20	.0525	>20	N/A	N/A
February 1999	.0540	1–20	.0525	>20	N/A	N/A
March 1999	.0530	1–20	.0525	>20	N/A	N/A
April 1999	.0560	1–20	.0525	>20	N/A	N/A
May 1999	.0570	1–20	.0525	>20	N/A	N/A
June 1999	.0570	1–20	.0525	>20	N/A	N/A
July 1999	.0600	1–20	.0525	>20	N/A	N/A
August 1999	.0630	1–20	.0525	>20	N/A	N/A
September 1999	.0630	1–20	.0525	>20	N/A	N/A
October 1999	.0630	1–20	.0525	>20	N/A	N/A
November 1999	.0630	1–20	.0525	>20	N/A	N/A
December 1999	.0650	1–20	.0525	>20	N/A	N/A
January 2000	.0690	1–25	.0625	>25	N/A	N/A
February 2000	.0710	1–25	.0625	>25	N/A	N/A
March 2000	.0710	1–25	.0625	>25	N/A	N/A.
April 2000	.0710	1–25	.0625	>25	N/A	N/A
May 2000	.0700	1–25	.0625	>25	N/A	N/A
June 2000	.0710	1–25	.0625	>25	N/A	N/A
July 2000	.0740	1–25	0625	>25	N/A	N/A
August 2000	.0710	1–25	.0625	>25	N/A	N/A
September 2000	.070	1–25	.0625	25	N/A	N/A
October 2000	.0700	1–25	.0625	>25	N/A	N/A
November 2000	.0710	1–25	.0625	>25	N/A	N/A
December 2000	.0700	1–25	.0625	>25	N/A	N/A
January 2001	.0670	1–20	.0625	>20	N/A	N/A
February 2001	.0650	1–20	.0625	>20	N/A	N/A
March 2001	.0640	1–20	.0625	>20	N/A	N/A
April 2001	.0640	1–20	.0625	>20	N/A	N/A
May 2001	.0640	1–20	.0625	>20	N/A	N/A
June 2001	.0660	1–20	.0625	>20	N/A	N/A
July 2001	.0660	1–20	.0625	>20	N/A	N/A
August 2001	.0640	1–20	.0625	>20	N/A	N/A
September 2001	.0630	1–20	.0625	>20	N/A	N/A
October 2001	.0610	1–20	.0625	>20	N/A	N/A
November 2001	.0650	1–20	.0625	>20	N/A	N/A
December 2001	.0610	1–20	.0625	>20	N/A	N/A
January 2002	.0580	1–25	.0425	>25	N/A	N/A
February 2002	.0580	1–25	.0425	>25	N/A	N/A
March 2002	.0560	1–25	.0425	>25	N/A	N/A
April 2002	.0550	1–25	.0425	>25	N/A	N/A
May 2002	.0590	1–25	.0425	>25	N/A	N/A
June 2002	.0570	1–25	.0425	>25	N/A	N/A
July 2002	.0570	1–25	.0425	>25	N/A	N/A
August 2002	.0550	1–25	.0425	>25	N/A	N/A
September 2002	.0540	1–25	.0425	25	N/A	N/A
October 2002	.0530	1–25	.0425	>25	N/A	N/A
November 2002	.0500	1–25	.0425	>25	N/A	N/A
December 2002	.0530	1–25	.0425	>25	N/A	N/A
January 2003	.0530	1–20	.0525	>20	N/A	N/A
February 2003	.0510	1–20	.0525	>20	N/A	N/A
March 2003	.0510	1–20	.0525	>20	N/A	N/A
April 2003	.0490	1–20	.0525	>20	N/A	N/A
May 2003	.0490	1–20	.0525	>20	N/A	N/A

For valuation dates occurring in the month—	The values of i_t are:					
	i_t	for t=	i_t	for t=	i_t	for t=
June 2003	.0470	1–20	.0525	>20	N/A	N/A
July 2003	.0430	1–20	.0525	>20	N/A	N/A
August 2003	.0440	1–20	.0525	>20	N/A	N/A
September 2003	.0490	1–20	.0525	>20	N/A	N/A
October 2003	.0490	1–20	.0525	>20	N/A	N/A
November 2003	.0460	1–20	.0525	20	N/A	N/A
December 2003	.0470	1–20	.0525	>20	N/A	N/A
January 2004	.0420	1–20	.0500	>20	N/A	N/A
February 2004	.0410	1–20	.0500	>20	N/A	N/A
March 2004	.0410	1–20	.0500	>20	N/A	N/A
April 2004	.0400	1–20	.0500	>20	N/A	N/A
May 2004	.0390	1–20	.0500	>20	N/A	N/A
June 2004	.0430	1–20	.0500	>20	N/A	N/A
July 2004	.0450	1–20	.0500	>20	N/A	N/A
August 2004	.0430	1–20	.0500	>20	N/A	N/A
September 2004	.0420	1–20	.0500	>20	N/A	N/A
October 2004	.0400	1–20	.0500	>20	N/A	N/A
November 2004	.0380	1–20	.0500	>20	N/A	N/A
December 2004	.0380	1–20	.0500	>20	N/A	N/A
January 2005	.0410	1–20	.0475	>20	N/A	N/A
February 2005	.0400	1–20	.0475	>20	N/A	N/A
March 2005	.0380	1–20	.0475	>20	N/A	N/A
April 2005	.0380	1–20	.0475	>20	N/A	N/A
May 2005	.0390	1–20	.0475	>20	N/A	N/A
June 2005	.0370	1–20	.0475	>20	N/A	N/A
July 2005	.0360	1–20	.0475	>20	N/A	N/A
August 2005	.0340	1–20	.0475	>20	N/A	N/A
September 2005	.0360	1–20	.0475	>20	N/A	N/A
October 2005	.0350	1–20	.0475	>20	N/A	N/A
November 2005	.0370	1–20	.0475	>20	N/A	N/A
December 2005	.0400	1–20	.0475	>20	N/A	N/A
January 2006	.0570	1–20	.0475	>20	N/A	N/A
February 2006	.0560	1–20	.0475	>20	N/A	N/A
March 2006	.0570	1–20	.0475	>20	N/A	N/A
April 2006	.0560	1–20	.0475	>20	N/A	N/A
May 2006	.0590	1–20	.0475	>20	N/A	N/A
June 2006	.0620	1–20	.0475	>20	N/A	N/A
July 2006	.0630	1–20	.0475	>20	N/A	N/A
August 2006	.0640	1–20	.0475	>20	N/A	N/A
September 2006	.0620	1–20	.0475	>20	N/A	N/A
October 2006	.0600	1–20	.0475	>20	N/A	N/A
November 2006	.0570	1–20	.0475	>20	N/A	N/A
December 2006	.0580	1–20	.0475	>20	N/A	N/A
January 2007	.0488	1–20	.0455	>20	N/A	N/A
February 2007	.0513	1–20	.0480	>20	N/A	N/A
March 2007	.0522	1–20	.0489	>20	N/A	N/A
April 2007	.0499	1–20	.0466	>20	N/A	N/A
May 2007	.0520	1–20	.0487	>20	N/A	N/A
June 2007	.0514	1–20	.0481	>20	N/A	N/A
July 2007	.0533	1–20	.0500	>20	N/A	N/A
August 2007	.0549	1–20	.0516	>20	N/A	N/A
September 2007	.0553	1–20	.0520	>20	N/A	N/A
October 2007	.0551	1–20	.0518	>20	N/A	N/A
November 2007	.0546	1–20	.0513	>20	N/A	N/A
December 2007	.0537	1–20	.0504	>20	N/A	N/A
January 2008	.0542	1–20	.0449	>20	N/A	N/A
February 2008	.0550	1–20	.0457	>20	N/A	N/A
March 2008	.0554	1–20	.0461	>20	N/A	N/A
April 2008	.0564	1–20	.0471	>20	N/A	N/A
May 2008	.0581	1–20	.0488	>20	N/A	N/A
June 2008	.0568	1–20	.0475	>20	N/A	N/A
July 2008	.0595	1–20	.0502	20	N/A	N/A
August 2008	.0605	1–20	.0512	>20	N/A	N/A
September 2008	.0624	1–20	.0531	>20	N/A	N/A
October 2008	.0618	1–20	.0525	>20	N/A	N/A
November 2008	.0709	1–20	.0616	>20	N/A	N/A
December 2008	.0792	1–20	.0699	>20	N/A	N/A
January 2009	0.0602	1–20	0.0548	>20	N/A	N/A
February 2009	0.0602	1–20	0.0548	>20	N/A	N/A
March 2009	0.0602	1–20	0.0548	>20	N/A	N/A
April–June 2009	0.0550	1–20	0.0502	>20	N/A	N/A
July–September 2009	0.0531	1–20	0.0504	>20	N/A	N/A

For valuation dates occurring in the month—	The values of i_t are:					
	i_t	for t=	i_t	for t=	i_t	for t=
October–December 2009	0.0530	1–20	0.0501	>20	N/A	N/A
January—March 2010	0.0489	1–20	0.0463	>20	N/A	N/A
April–June 2010	0.0463	1–20	0.0451	>20	N/A	N/A
July–September 2010	0.0493	1–20	0.0466	>20	N/A	N/A
October–December 2010	0.0448	1–25	0.0451	>25	N/A	N/A
January–March 2011	0.0407	1–25	0.0393	>25	N/A	N/A
April–June 2011	0.0396	1–20	0.0432	>20	N/A	N/A
July–September 2011	0.0422	1–20	0.0434	>20	N/A	N/A
October–December 2011	0.0409	1–20	0.0430	>20	N/A	N/A
January–March 2012	0.0374	1–20	0.0370	>20	N/A	N/A
April–June 2012	0.0311	1–20	0.0336	>20	N/A	N/A
July–September 2012	0.0295	1–20	0.0366	>20	N/A	N/A
October—December 2012	0.0307	1–20	0.0300	>20	N/A	N/A
January–March 2013	0.0267	1–20	0.0301	>20	N/A	N/A
April–June 2013	0.0250	1–20	0.0320	>20	N/A	N/A
July–September 2013	0.0260	1–20	0.0343	>20	N/A	N/A
October–December 2013	0.0300	1–20	0.0331	>20	N/A	N/A
January–March 2014	0.0335	1–20	0.0350	>20	N/A	N/A
April—June 2014	0.0347	1–20	0.0364	>20	N/A	N/A
July–September 2014	0.0343	1–20	0.0366	>20	N/A	N/A

[61 FR 34059, July 1, 1996]

EDITORIAL NOTE: For FEDERAL REGISTER citations affecting part 4044, appendix B, see the List of CFR Sections Affected, which appears in the Finding Aids section of the printed volume and at *www.fdsys.gov*.

APPENDIX C TO PART 4044—LOADING ASSUMPTIONS

If the total value of the plan's benefit liabilities (as defined in 29 U.S.C. § 1301(a)(16)), exclusive of the loading charge, is—		The loading charge equals—
greater than	but less than or equal to	
$0	$200,000	5% of the total value of the plan's benefits, plus $200 for each plan participant.
$200,000		$10,000, plus a percentage of the excess of the total value over $200,000, plus $200 for each plan participant; the percentage is equal to 1%+[(P%−7.50%)/10], where P% is the initial rate, expressed as a percentage, set forth in appendix B of this part for the valuation of benefits.

[61 FR 34059, July 1, 1996, as amended at 65 FR 14753, Mar. 17, 2000]

APPENDIX D TO PART 4044—TABLES USED TO DETERMINE EXPECTED RETIREMENT AGE

TABLE I–14—SELECTION OF RETIREMENT RATE CATEGORY

[For Plans with valuation dates after December 31, 2013, and before January 1, 2015]

If participant reaches URA in year—	Participant's Retirement Rate Category is—			
	Low [1] if monthly benefit at URA is less than—	Medium [2] if monthly benefit at URA is—		High [3] if monthly benefit at URA is greater than—
		From—	To—	
2015	614	614	2,594	2,594
2016	627	627	2,651	2,651
2017	641	641	2,710	2,710
2018	655	655	2,769	2,769
2019	670	670	2,830	2,830
2020	685	685	2,893	2,893
2021	700	700	2,956	2,956
2022	715	715	3,021	3,021
2023	731	731	3,088	3,088
2024 or later	747	747	3,156	3,156

[1] Table II–A.
[2] Table II–B.

[3] Table II–C.

[78 FR 72019, Dec. 2, 2013]

TABLE II-A—EXPECTED RETIREMENT AGES FOR INDIVIDUALS IN THE LOW CATEGORY

Participant's earliest retirement age at valuation date.	Unreduced retirement age										
	60	61	62	63	64	65	66	67	68	69	70
42	53	53	53	54	54	54	54	54	54	54	54
43	53	54	54	54	55	55	55	55	55	55	55
44	54	54	55	55	55	55	55	56	56	56	56
45	54	55	55	56	56	56	56	56	56	56	56
46	55	55	56	56	56	57	57	57	57	57	57
47	56	56	56	57	57	57	57	57	57	57	57
48	56	57	57	57	58	58	58	58	58	58	58
49	56	57	58	58	58	58	59	59	59	59	59
50	57	57	58	58	59	59	59	59	59	59	59
51	57	58	58	59	59	60	60	60	60	60	60
52	58	58	59	59	60	60	60	60	60	60	60
53	58	59	59	60	60	61	61	61	61	61	61
54	58	59	60	60	61	61	61	61	61	61	61
55	59	59	60	61	61	61	62	62	62	62	62
56	59	60	60	61	61	62	62	62	62	62	62
57	59	60	61	61	62	62	62	62	62	62	62
58	59	60	61	61	62	62	63	63	63	63	63
59	59	60	61	62	62	63	63	63	63	63	63
60	60	60	61	62	62	63	63	63	63	63	63
61	.....	61	61	62	63	63	63	63	64	64	64
62	.....	.....	62	62	63	63	63	64	64	64	64
63	.....	.....	.....	63	63	64	64	65	65	65	65
64	.....	.....	.....	.....	64	64	65	65	65	65	65
65	.....	.....	.....	.....	.....	65	65	65	65	65	65
66	.....	.....	.....	.....	.....	.....	66	66	66	66	66
67	.....	.....	.....	.....	.....	.....	.....	67	67	67	67
68	.....	.....	.....	.....	.....	.....	.....	.....	68	68	68
69	.....	.....	.....	.....	.....	.....	.....	.....	.....	69	69
70	.....	.....	.....	.....	.....	.....	.....	.....	.....	.....	70

TABLE II-B—EXPECTED RETIREMENT AGES FOR INDIVIDUALS IN THE MEDIUM CATEGORY

Participant's earliest retirement age at valuation date	Unreduced retirement age										
	60	61	62	63	64	65	66	67	68	69	70
42	49	49	49	49	49	49	49	49	49	49	49
43	50	50	50	50	50	50	50	50	50	50	50
44	50	51	51	51	51	51	51	51	51	51	51
45	51	51	52	52	52	52	52	52	52	52	52
46	52	52	52	53	53	53	53	53	53	53	53
47	53	53	53	53	53	54	54	54	54	54	54
48	54	54	54	54	54	54	54	54	54	54	54
49	54	55	55	55	55	55	55	55	55	55	55
50	55	55	56	56	56	56	56	56	56	56	56
51	56	56	56	57	57	57	57	57	57	57	57
52	56	57	57	57	57	58	58	58	58	58	58
53	57	57	58	58	58	58	58	58	58	58	58
54	57	58	58	59	59	59	59	59	59	59	59
55	58	58	59	59	59	60	60	60	60	60	60
56	58	59	59	60	60	60	60	60	60	60	60
57	59	59	60	60	61	61	61	61	61	61	61
58	59	60	60	61	61	61	61	61	61	61	61
59	59	60	61	61	62	62	62	62	62	62	62
60	60	60	61	62	62	62	62	62	62	62	62
61	.....	61	61	62	62	63	63	63	63	63	63
62	.....	.....	62	62	62	63	63	63	63	63	63
63	.....	.....	.....	63	63	64	64	64	64	64	64
64	.....	.....	.....	.....	64	64	64	64	64	64	64
65	.....	.....	.....	.....	.....	65	65	65	65	65	65
66	.....	.....	.....	.....	.....	.....	66	66	66	66	66
67	.....	.....	.....	.....	.....	.....	.....	67	67	67	67
68	.....	.....	.....	.....	.....	.....	.....	.....	68	68	68
69	.....	.....	.....	.....	.....	.....	.....	.....	.....	69	69
70	.....	.....	.....	.....	.....	.....	.....	.....	.....	.....	70

TABLE II-C—EXPECTED RETIREMENT AGES FOR INDIVIDUALS IN THE HIGH CATEGORY

Participant's earliest retirement age at valuation date.	Unreduced retirement age										
	60	61	62	63	64	65	66	67	68	69	70
42	46	46	46	46	46	47	47	47	47	47	47
43	47	47	47	47	47	47	47	47	47	47	47
44	48	48	48	48	48	48	48	48	48	48	48
45	49	49	49	49	49	49	49	49	49	49	49
46	50	50	50	50	50	50	50	50	50	50	50
47	51	51	51	51	51	51	51	51	51	51	51
48	52	52	52	52	52	52	52	52	52	52	52
49	53	53	53	53	53	53	53	53	53	53	53
50	54	54	54	54	54	54	54	54	54	54	54
51	54	55	55	55	55	55	55	55	55	55	55
52	55	55	56	56	56	56	56	56	56	56	56
53	56	56	56	57	57	57	57	57	57	57	57
54	57	57	57	57	57	58	58	58	58	58	58
55	57	58	58	58	58	58	58	58	58	58	58
56	58	58	59	59	59	59	59	59	59	59	59
57	58	59	59	60	60	60	60	60	60	60	60
58	59	59	60	60	60	60	61	61	61	61	61
59	59	60	60	61	61	61	61	61	61	61	61
60	60	60	61	61	61	62	62	62	62	62	62
61	.....	61	61	62	62	62	62	62	62	62	62
62	.....	.....	62	62	62	62	62	62	62	62	62
63	.....	.....	.....	63	63	63	64	64	64	64	64
64	.....	.....	.....	.....	64	64	64	64	64	64	64
65	.....	.....	.....	.....	.....	65	65	65	65	65	65
66	.....	.....	.....	.....	.....	.....	66	66	66	66	66
67	.....	.....	.....	.....	.....	.....	.....	67	67	67	67
68	.....	.....	.....	.....	.....	.....	.....	.....	68	68	68
69	.....	.....	.....	.....	.....	.....	.....	.....	.....	69	69
70	.....	.....	.....	.....	.....	.....	.....	.....	.....	.....	70

[61 FR 34059, July 1, 1996; 61 FR 36626, July 12, 1996, as amended at 61 FR 65476, Dec. 13, 1996; 62 FR 65611, Dec. 15, 1997; 63 FR 63180, Nov. 12, 1998; 64 FR 67165, Dec. 1, 1999; 65 FR 75166, Dec. 1, 2000; 66 FR 59695, Nov. 30, 2001; 67 FR 71472, Dec. 2, 2002; 68 FR 67034, Dec. 1, 2003; 69 FR 69822, Dec. 1, 2004; 70 FR 72076, Dec. 1, 2005; 71 FR 69482, Dec. 1, 2006; 72 FR 67645, Nov. 30, 2007; 73 FR 72717, Dec. 1, 2008; 74 FR 62698, Dec. 1, 2009; 75 FR 74622, Dec. 1, 2010]

PART 4047—RESTORATION OF TERMINATING AND TERMINATED PLANS

Sec.
4047.1 Purpose and scope.
4047.2 Definitions.
4047.3 Funding of restored plan.
4047.4 Payment of premiums.
4047.5 Repayment of PBGC payments of guaranteed benefits.

AUTHORITY: 29 U.S.C. 1302(b)(3), 1347.

SOURCE: 61 FR 34073, July 1, 1996, unless otherwise noted.

§ 4047.1 Purpose and scope.

Section 4047 of ERISA gives the PBGC broad authority to take any necessary actions in furtherance of a plan restoration order issued pursuant to section 4047. This part (along with Treasury regulation 26 CFR 1.412(c)(1)–3) describes certain legal obligations that arise incidental to a plan restoration under section 4047. This part also establishes procedures with respect to these obligations that are intended to facilitate the orderly transition of a restored plan from terminated (or terminating) status to ongoing status, and to help ensure that the restored plan will continue to be ongoing consistent with the best interests of the plan's participants and beneficiaries and the single-employer insurance program. This part applies to terminated and terminating single-employer plans (except for plans terminated and terminating under ERISA section 4041(b)) with respect to which the PBGC has issued or is issuing a plan restoration order pursuant to ERISA section 4047.

§ 4047.2 Definitions.

The following terms are defined in § 4001.2 of this chapter: controlled group, ERISA, IRS, PBGC, plan, plan

administrator, plan year, and single-employer plan.

§ 4047.3 Funding of restored plan.

(a) *General.* Whenever the PBGC issues or has issued a plan restoration order under ERISA section 4047, it shall issue to the plan sponsor a restoration payment schedule order in accordance with the rules of this section. PBGC, through its Executive Director, shall also issue a certification to its Board of Directors and the IRS, as described in paragraph (c) of this section. If more than one plan is or has been restored, the PBGC shall issue a separate restoration payment schedule order and separate certification with respect to each restored plan.

(b) *Restoration payment schedule order.* A restoration payment schedule order shall set forth a schedule of payments sufficient to amortize the initial restoration amortization base described in paragraph (b) of 26 CFR 1.412(c)(1)–3 over a period extending no more than 30 years after the initial post-restoration valuation date, as defined in paragraph (a)(1) of 26 CFR 1.412(c)(1)–3. The restoration payment schedule shall be consistent with the requirements of 26 CFR 1.412(c)(1)–3 and may require payments at intervals of less than one year, as determined by the PBGC. The PBGC may, in its discretion, amend the restoration payment schedule at any time, consistent with the requirements of 26 CFR 1.412(c)(1)–3.

(c) *Certification.* The Executive Director's certification to the Board of Directors and the IRS pursuant to paragraph (a) of this section shall state that the PBGC has reviewed the funding of the plan, the financial condition of the plan sponsor and its controlled group members, the payments required under the restoration payment schedule (taking into account the availability of deferrals as permitted under paragraph (c)(4) of 26 CFR 1.412(c)(1)–3) and any other factor that the PBGC deems relevant, and, based on that review, determines that it is in the best interests of the plan's participants and beneficiaries and the single-employer insurance program that the restored plan not be reterminated.

(d) *Periodic PBGC review.* As long as a restoration payment schedule order issued under this section is in effect, the PBGC shall review annually the funding status of the plan with respect to which the order applies. As part of this review, the PBGC, through its Executive Director, shall issue a certification in the form described in paragraph (c) of this section. As a result of its funding review, PBGC may amend the restoration payment schedule, consistent with the requirements of paragraph (c)(2) of 26 CFR 1.412(c)(1)–3.

§ 4047.4 Payment of premiums.

(a) *General.* Upon restoration of a plan pursuant to ERISA section 4047, the obligation to pay PBGC premiums pursuant to ERISA section 4007 is reinstated as of the date on which the plan was trusteed under section 4042 of ERISA. Except as otherwise specifically provided in paragraphs (b) and (c) of this section, the amount of the outstanding premiums owed shall be computed and paid by the plan administrator in accordance with part 4006 of this chapter (Premium Rates) and the forms and instructions issued pursuant thereto, as in effect for the plan years for which premiums are owed.

(b) *Notification of premiums owed.* Whenever the PBGC issues or has issued a plan restoration order, it shall send a written notice to the plan administrator of the restored plan advising the plan administrator of the plan year(s) for which premiums are owed. PBGC will include with the notice the necessary premium payment forms and instructions. The notice shall prescribe the payment due dates for the outstanding premiums.

(c) *Methods for determining variable rate portion of the premium.* In general, the variable rate portion of the outstanding premiums shall be determined in accordance with the premium regulation and forms, as provided in paragraph (a) of this section, except that for any plan year following a plan year for which Form 5500, Schedule B was not filed because the plan was terminated, the alternative calculation method may not be used.

[61 FR 34073, July 1, 1996, as amended at 79 FR 13562, Mar. 11, 2014]

§ 4047.5 Repayment of PBGC payments of guaranteed benefits.

(a) *General*. Upon restoration of a plan pursuant to ERISA section 4047, amounts paid by the PBGC from its single-employer insurance fund (the fund established pursuant to ERISA section 4005(a)) to pay guaranteed benefits and related expenses under the plan while it was terminated are a debt of the restored plan. The terms and conditions for payment of this debt shall be determined by the PBGC.

(b) *Repayment terms*. The PBGC shall prescribe reasonable terms and conditions for payment of the debt described in paragraph (a) of this section, including the number, amount and commencement date of the payments. In establishing the terms, PBGC will consider the cash needs of the plan, the timing and amount of contributions owed to the plan, the liquidity of plan assets, the interests of the single-employer insurance program, and any other factors PBGC deems relevant. PBGC may, in its discretion, revise any of the payment terms and conditions, upon written notice to the plan administrator in accordance with paragraph (c) of this section.

(c) *Notification to plan administrator*. Whenever the PBGC issues or has issued a plan restoration order, it shall send a written notice to the plan administrator of the restored plan advising the plan administrator of the amount owed the PBGC pursuant to paragraph (a) of this section. The notice shall also include the terms and conditions for payment of this debt, as established under paragraph (b) of this section.

PART 4050—MISSING PARTICIPANTS

Sec.

4050.1 Purpose and scope.
4050.2 Definitions.
4050.3 Method of distribution for missing participants.
4050.4 Diligent search.
4050.5 Designated benefit.
4050.6 Payment and required documentation.
4050.7 Benefits of missing participants—in general.
4050.8 Automatic lump sum.
4050.9 Annuity or elective lump sum—living missing participant.
4050.10 Annuity or elective lump sum—beneficiary of deceased missing participant.
4050.11 Limitations.
4050.12 Special rules.
APPENDIX A TO PART 4050—EXAMPLES OF DESIGNATED BENEFIT DETERMINATIONS FOR MISSING PARTICIPANTS UNDER § 4050.5 IN PLANS WITH DEEMED DISTRIBUTION DATES ON AND AFTER AUGUST 17, 1998
APPENDIX B TO PART 4050—EXAMPLES OF BENEFIT PAYMENTS FOR MISSING PARTICIPANTS UNDER §§ 4050.8 THROUGH 4050.10

AUTHORITY: 29 U.S.C. 1302(b)(3), 1350.

SOURCE: 62 FR 60440, Nov. 7, 1997, unless otherwise noted.

§ 4050.1 Purpose and scope.

This part prescribes rules for distributing benefits under a terminating single-employer plan for any individual whom the plan administrator has not located when distributing benefits under § 4041.28 of this chapter. This part applies to a plan if the plan's deemed distribution date (or the date of a payment made in accordance with § 4050.12) is in a plan year beginning on or after January 1, 1996.

§ 4050.2 Definitions.

The following terms are defined in § 4001.2 of this chapter: annuity, Code, ERISA, insurer, irrevocable commitment, mandatory employee contributions, normal retirement age, PBGC, person, plan, plan administrator, plan year and title IV benefit.

In addition, for purposes of this part:

Deemed distribution date means—

(1) The last day of the period in which distribution may be made under part 4041 of this chapter; or

(2) If the plan administrator selects an earlier date that is no earlier than the date when all benefit distributions have been made under the plan except for distributions to missing participants whose designated benefits are paid to the PBGC, such earlier date.

Designated benefit means the amount payable to the PBGC for a missing participant pursuant to § 4050.5.

Designated benefit interest rate means the rate of interest applicable to underpayments of guaranteed benefits by the PBGC under § 4022.81(c) of this chapter.

Guaranteed benefit form means, with respect to a benefit, the form in which

the PBGC would pay a guaranteed benefit to a participant or beneficiary in the PBGC's program for trusteed plans under subparts A and B of part 4022 of this chapter (treating the deemed distribution date as the termination date for this purpose).

Missing participant means a participant or beneficiary entitled to a distribution under a terminating plan whom the plan administrator has not located as of the date when the plan administrator pays the individual's designated benefit to the PBGC (or distributes the individual's benefit by purchasing an irrevocable commitment from an insurer). In the absence of proof of death, individuals not located are presumed living.

Missing participant annuity assumptions means the interest rate assumptions and actuarial methods for valuing benefits under § 4044.52 of this chapter, applied—

(1) As if the deemed distribution date were the termination date;

(2) Using mortality rates that are a fixed blend of 50 percent of the healthy male mortality rates in § 4044.53(c)(1) of this chapter and 50 percent of the healthy female mortality rates in § 4044.53(c)(2) of this chapter;

(3) Without using the expected retirement age assumptions in §§ 4044.55 through 4044.57 of this chapter;

(4) Without making the adjustment for expenses provided for in § 4044.52(d) of this chapter; and

(5) By adding $300, as an adjustment (loading) for expenses, for each missing participant whose designated benefit without such adjustment would be greater than $5,000.

Missing participant forms and instructions means PBGC Forms 501 and 602, Schedule MP thereto, and related forms, and their instructions.

Missing participant lump sum assumptions means the interest rate and mortality assumptions and actuarial methods for determining the lump sum value of a benefit under § 4022.7(d) of this chapter applied—

(1) As if the deemed distribution date were the termination date; and

(2) Without using the expected retirement age assumptions in §§ 4044.55 through 4044.57 of this chapter.

Pay status means, with respect to a benefit under a plan, that the plan administrator has made or (except for administrative delay or a waiting period) would have made one or more benefit payments.

Post-distribution certification means the post-distribution certification required by § 4041.29 or § 4041.50 of this chapter.

Unloaded designated benefit means the designated benefit reduced by $300; except that the reduction does not apply in the case of a designated benefit determined using the missing participant annuity assumptions without adding the $300 load described in paragraph (5) of the definition of ''missing participant annuity assumptions.''

[62 FR 60440, Nov. 7, 1997, as amended at 63 FR 29355, May 29, 1998; 63 FR 38306, July 16, 1998; 65 FR 14753, Mar. 17, 2000; 71 FR 75117, Dec. 14, 2006]

§ 4050.3 Method of distribution for missing participants.

The plan administrator of a terminating plan must distribute benefits for each missing participant by—

(a) Purchasing from an insurer an irrevocable commitment that satisfies the requirements of § 4041.28(c) or § 4041.50 of this chapter (whichever is applicable); or

(b) Paying the PBGC a designated benefit in accordance with §§ 4050.4 through 4050.6 (subject to the special rules in § 4050.12).

§ 4050.4 Diligent search.

(a) *Search required*. A diligent search must be made for each missing participant before information about the missing participant or payment is submitted to the PBGC pursuant to § 4050.6.

(b) *Diligence*. A search is a diligent search only if the search—

(1) Begins not more than 6 months before notices of intent to terminate are issued and is carried on in such a manner that if the individual is found, distribution to the individual can reasonably be expected to be made on or before the deemed distribution date;

(2) Includes inquiry of any plan beneficiaries (including alternate payees) of the missing participant whose names

and addresses are known to the plan administrator; and

(3) Includes use of a commercial locator service to search for the missing participant (without charge to the missing participant or reduction of the missing participant's plan benefit).

§ 4050.5 Designated benefit.

(a) *Amount of designated benefit.* The amount of the designated benefit is the amount determined under paragraph (a)(1), (a)(2), (a)(3), or (a)(4) of this section (whichever is applicable) or, if less, the maximum amount that could be provided under the plan to the missing participant in the form of a single sum in accordance with section 415 of the Code.

(1) *Mandatory lump sum.* The designated benefit of a missing participant required under a plan to receive a mandatory lump sum as of the deemed distribution date is the lump sum payment that the plan administrator would have distributed to the missing participant as of the deemed distribution date.

(2) *De minimis lump sum.* The designated benefit of a missing participant not described in paragraph (a)(1) of this section whose benefit is not in pay status as of the deemed distribution date and whose benefit has a *de minimis* actuarial present value ($5,000 or less) as of the deemed distribution date under the missing participant lump sum assumptions is such value.

(3) *No lump sum.* The designated benefit of a missing participant not described in paragraph (a)(1) or (a)(2) of this section who, as of the deemed distribution date, cannot elect an immediate lump sum under the plan is the actuarial present value of the missing participant's benefit as of the deemed distribution date under the missing participant annuity assumptions.

(4) *Elective lump sum.* The designated benefit of a missing participant not described in paragraph (a)(1), (a)(2), or (a)(3) of this section is the greater of the amounts determined under the methodologies of paragraph (a)(1) or (a)(3) of this section.

(b) *Assumptions.* When the plan administrator uses the missing participant annuity assumptions or the missing participant lump sum assumptions for purposes of determining the designated benefit under paragraph (a) of this section, the plan administrator must value the most valuable benefit, as determined under paragraph (b)(1) of this section, using the assumptions described in paragraph (b)(2) or (b)(3) of this section (whichever is applicable).

(1) *Most valuable benefit.* For a missing participant whose benefit is in pay status as of the deemed distribution date, the most valuable benefit is the pay status benefit. For a missing participant whose benefit is not in pay status as of the deemed distribution date, the most valuable benefit is the benefit payable at the age on or after the deemed distribution date (beginning with the participant's earliest early retirement age and ending with the participant's normal retirement age) for which the present value as of the deemed distribution date is the greatest. The present value as of the deemed distribution date with respect to any age is determined by multiplying:

(i) The monthly (or other periodic) benefit payable under the plan; by

(ii) The present value (determined as of the deemed distribution date using the missing participant annuity assumptions) of a $1 monthly (or other periodic) annuity beginning at the applicable age.

(2) *Participant.* A missing participant who is a participant, and whose benefit is not in pay status as of the deemed distribution date, is assumed to be married to a spouse the same age, and the form of benefit that must be valued is the qualified joint and survivor annuity benefit that would be payable under the plan. If the participant's benefit is in pay status as of the deemed distribution date, the form and beneficiary of the participant's benefit are the form of benefit and beneficiary of the pay status benefit.

(3) *Beneficiary.* A missing participant who is a beneficiary, and whose benefit is not in pay status as of the deemed distribution date, is assumed not to be married, and the form of benefit that must be valued is the survivor benefit that would be payable under the plan. If the beneficiary's benefit is in pay status as of the deemed distribution date, the form and beneficiary of the

beneficiary's benefit are the form of benefit and beneficiary of the pay status benefit.

(4) *Examples*. See Appendix A to this part for examples illustrating the provisions of this section.

(c) *Missed payments*. In determining the designated benefit, the plan administrator must include the value of any payments that were due before the deemed distribution date but that were not made.

(d) *Payment of designated benefits*. Payment of designated benefits must be made in accordance with § 4050.6 and will be deemed made on the deemed distribution date.

[62 FR 60440, Nov. 7, 1997, as amended at 63 FR 38306, July 16, 1998]

§ 4050.6 Payment and required documentation.

(a) *Time of payment and filing*. The plan administrator must pay designated benefits, and file the information and certifications (of the plan administrator and the plan's enrolled actuary) specified in the missing participant forms and instructions, by the time the post-distribution certification is due. Except as otherwise provided in the missing participant forms and instructions, the plan administrator must submit the designated benefits, information, and certifications with the post-distribution certification.

(b) *Late charges*—(1) *Interest on late payments*. Except as provided in paragraph (b)(2) of this section, if the plan administrator does not pay a designated benefit by the time specified in paragraph (a) of this section, the plan administrator must pay interest as assessed by the PBGC for the period beginning on the deemed distribution date and ending on the date when the payment is received by the PBGC. Interest will be assessed at the rate provided for late premium payments in § 4007.7 of this chapter. Interest assessed under this paragraph will be deemed paid in full if payment of the amount assessed is received by the PBGC within 30 days after the date of a PBGC bill for such amount.

(2) *Assessment of interest and penalties*. The PBGC will assess interest for late payment of a designated benefit or a penalty for late filing of information only to the extent paid or filed beyond the time provided in § 4041.29(b).

(c) *Supplemental information*. Within 30 days after the date of a written request from the PBGC, a plan administrator required to provide the information and certifications described in paragraph (a) of this section must file supplemental information, as requested, for the purpose of verifying designated benefits, determining benefits to be paid by the PBGC under this part, and substantiating diligent searches.

(d) *Filing with the PBGC*—(1) *Method and date of filing*. The PBGC applies the rules in subpart A of part 4000 of this chapter to determine permissible methods of filing with the PBGC under this part. The PBGC applies the rules in subpart C of part 4000 of this chapter to determine the date that a submission under this part was filed with the PBGC.

(2) *Where to file*. See § 4000.4 of this chapter for information on where to file.

(3) *Computation of time*. The PBGC applies the rules in subpart D of part 4000 of this chapter to compute any time period for filing under this part. However, for purposes of determining the amount of an interest charge under § 4050.6(b) or § 4050.12(c)(2)(iii), the rule in § 4000.43(a) of this chapter governing periods ending on weekends or Federal holidays does not apply.

[62 FR 60440, Nov. 7, 1997, as amended at 68 FR 61354, Oct. 28, 2003]

§ 4050.7 Benefits of missing participants—in general.

(a) *If annuity purchased*. If a plan administrator distributes a missing participant's benefit by purchasing an irrevocable commitment from an insurer, and the missing participant (or his or her beneficiary or estate) later contacts the PBGC, the PBGC will inform the person of the identity of the insurer, the relevant policy number, and (to the extent known) the amount or value of the benefit.

(b) *If designated benefit paid*. If the PBGC locates or is contacted by a missing participant (or his or her beneficiary or estate) for whom a plan administrator paid a designated benefit

to the PBGC, the PBGC will pay benefits in accordance with §§ 4050.8 through 4050.10 (subject to the limitations and special rules in §§ 4050.11 and 4050.12).

(c) *Examples.* See Appendix B to this part for examples illustrating the provisions of §§ 4050.8 through 4050.10.

§ 4050.8 Automatic lump sum.

This section applies to a missing participant whose designated benefit was determined under § 4050.5(a)(1) (mandatory lump sum) or § 4050.5(a)(2) (*de minimis* lump sum).

(a) *General rule*—(1) *Benefit paid.* The PBGC will pay a single sum benefit equal to the designated benefit plus interest at the designated benefit interest rate from the deemed distribution date to the date on which the PBGC pays the benefit.

(2) *Payee.* Payment will be made—

(i) To the missing participant, if located;

(ii) If the missing participant died before the deemed distribution date, and if the plan so provides, to the missing participant's beneficiary or estate; or

(iii) If the missing participant dies on or after the deemed distribution date, to the missing participant's estate.

(b) *De minimis annuity alternative.* If the guaranteed benefit form for a missing participant whose designated benefit was determined under § 4050.5(a)(2) (*de minimis* lump sum) (or the guaranteed benefit form for a beneficiary of such a missing participant) would provide for the election of an annuity, the missing participant (or the beneficiary) may elect to receive an annuity. If such an election is made—

(1) The PBGC will pay the benefit in the elected guaranteed benefit form, beginning on the annuity starting date elected by the missing participant (or the beneficiary), which may not be before the later of the date of the election or the earliest date on which the missing participant (or the beneficiary) could have begun receiving benefits under the plan; and

(2) The benefit paid will be actuarially equivalent to the designated benefit, *i.e.,* each monthly (or other periodic) benefit payment will equal the designated benefit divided by the present value (determined as of the deemed distribution date under the missing participant lump sum assumptions) of a $1 monthly (or other periodic) annuity beginning on the annuity starting date.

§ 4050.9 Annuity or elective lump sum—living missing participant.

This section applies to a missing participant whose designated benefit was determined under § 4050.5(a)(3) (no lump sum) or § 4050.5(a)(4) (elective lump sum) and who is living on the date as of which the PBGC begins paying benefits.

(a) *Missing participant whose benefit was not in pay status as of the deemed distribution date.* The PBGC will pay the benefit of a missing participant whose benefit was not in pay status as of the deemed distribution date as follows.

(1) *Time and form of benefit.* The PBGC will pay the missing participant's benefit in the guaranteed benefit form, beginning on the annuity starting date elected by the missing participant (which may not be before the later of the date of the election or the earliest date on which the missing participant could have begun receiving benefits under the plan).

(2) *Amount of benefit.* The PBGC will pay a benefit that is actuarially equivalent to the unloaded designated benefit, *i.e.,* each monthly (or other periodic) benefit payment will equal the unloaded designated benefit divided by the present value (determined as of the deemed distribution date under the missing participant annuity assumptions) of a $1 monthly (or other periodic) annuity beginning on the annuity starting date.

(b) *Missing participant whose benefit was in pay status as of the deemed distribution date.* The PBGC will pay the benefit of a missing participant whose benefit was in pay status as of the deemed distribution date as follows.

(1) *Time and form of benefit.* The PBGC will pay the benefit in the form that was in pay status, beginning when the missing participant is located.

(2) *Amount of benefit.* The PBGC will pay the monthly (or other periodic) amount of the pay status benefit, plus a lump sum equal to the payments the missing participant would have received under the plan, plus interest on the missed payments (at the plan rate

up to the deemed distribution date and thereafter at the designated benefit interest rate) to the date as of which the PBGC pays the lump sum.

(c) *Payment of lump sum.* If a missing participant whose designated benefit was determined under § 4050.5(a)(4) (elective lump sum) so elects, the PBGC will pay his or her benefit in the form of a single sum. This election is not effective unless the missing participant's spouse consents (if such consent would be required under section 205 of ERISA). The single sum equals the designated benefit plus interest (at the designated benefit interest rate) from the deemed distribution date to the date as of which the PBGC pays the benefit.

§ 4050.10 Annuity or elective lump sum—beneficiary of deceased missing participant.

This section applies to a beneficiary of a deceased missing participant whose designated benefit was determined under § 4050.5(a)(3) (no lump sum) or § 4050.5(a)(4) (elective lump sum) and whose benefit is not payable under § 4050.9.

(a) *If deceased missing participant's benefit was not in pay status as of the deemed distribution date.* The PBGC will pay a benefit with respect to a deceased missing participant whose benefit was not in pay status as of the deemed distribution date as follows.

(1) *General rule.* (i) *Beneficiary.* The PBGC will pay a benefit to the surviving spouse of a missing participant who was a participant (unless the surviving spouse has properly waived a benefit in accordance with section 205 of ERISA).

(ii) *Form and amount of benefit.* The PBGC will pay the survivor benefit in the form of a single life annuity. Each monthly (or other periodic) benefit payment will equal 50 percent of the quotient that results when the unloaded designated benefit is divided by the present value (determined as of the deemed distribution date under the missing participant annuity assumptions, and assuming that the missing participant survived to the deemed distribution date) of a $1 monthly (or other periodic) joint and 50 percent survivor annuity beginning on the annuity starting date, under which reduced payments (at the 50 percent level) are made only after the death of the missing participant during the life of the spouse (and not after the death of the spouse during the missing participant's life).

(iii) *Time of benefit.* The PBGC will pay the survivor benefit beginning at the time elected by the surviving spouse (which may not be before the later of the date of the election or the earliest date on which the surviving spouse could have begun receiving benefits under the plan).

(2) *If missing participant died before deemed distribution date.* Notwithstanding the provisions of paragraph (a)(1) of this section, if a beneficiary of a missing participant who died before the deemed distribution date establishes to the PBGC's satisfaction that he or she is the proper beneficiary or would have received benefits under the plan in a form, at a time, or in an amount different from the benefit paid under paragraph (a)(1)(ii) or (a)(1)(iii) of this section, the PBGC will make payments in accordance with the facts so established, but only in the guaranteed benefit form.

(3) *Elective lump sum.* Notwithstanding the provisions of paragraphs (a)(1) and (a)(2) of this section, if the beneficiary of a missing participant whose designated benefit was determined under § 4050.5(a)(4) (elective lump sum) so elects, the PBGC will pay his or her benefit in the form of a single sum. The single sum will be equal to the actuarial present value (determined as of the deemed distribution date under the missing participant annuity assumptions) of the death benefit payable on the annuity starting date, plus interest (at the designated benefit interest rate) from the deemed distribution date to the date as of which the PBGC pays the benefit.

(b) *If deceased missing participant's benefit was in pay status as of the deemed distribution date.* The PBGC will pay a benefit with respect to a deceased missing participant whose benefit was in pay status as of the deemed distribution date as follows.

(1) *Beneficiary.* The PBGC will pay a benefit to the beneficiary (if any) of

the benefit that was in pay status as of the deemed distribution date.

(2) *Form and amount of benefit.* The PBGC will pay a monthly (or other periodic) amount equal to the monthly (or other periodic) amount, if any, that the beneficiary would have received under the form of payment in effect, plus a lump sum payment equal to the payments the beneficiary would have received under the plan after the missing participant's death and before the date as of which the benefit is paid under paragraph (b)(4) of this section, plus interest on the missed payments (at the plan rate up to the deemed distribution date and thereafter at the designated benefit interest rate) to the date as of which the benefit is paid under paragraph (b)(4) of this section.

(3) *Lump sum payment to estate.* The PBGC will make a lump sum payment to the missing participant's estate equal to the payments that the missing participant would have received under the plan for the period before the missing participant's death, plus interest on the missed payments (at the plan rate up to the deemed distribution date and thereafter at the designated benefit interest rate) to the date when the lump sum is paid. Notwithstanding the preceding sentence, if a beneficiary of a missing participant other than the estate establishes to the PBGC's satisfaction that the beneficiary is entitled to the lump sum payment, the PBGC will pay the lump sum to such beneficiary.

(4) *Time of benefit.* The PBGC will pay the survivor benefit beginning when the beneficiary is located.

(5) *Spouse deceased.* If the PBGC locates the estate of the deceased missing participant's spouse under circumstances where a benefit would have been paid under this paragraph (b) if the spouse had been located while alive, the PBGC will pay to the spouse's estate a lump sum payment computed in the same manner as provided for in paragraph (b)(2) of this section based on the period from the missing participant's death to the death of the spouse.

§ 4050.11 Limitations.

(a) *Exclusive benefit.* The benefits provided for under this part will be the only benefits payable by the PBGC to missing participants or to beneficiaries based on the benefits of deceased missing participants.

(b) *Limitation on benefit value.* The total actuarial present value of all benefits paid with respect to a missing participant under §§ 4050.8 through 4050.10, determined as of the deemed distribution date, will not exceed the missing participant's designated benefit.

(c) *Guaranteed benefit.* If a missing participant or his or her beneficiary establishes to the PBGC's satisfaction that the benefit under §§ 4050.8 through 4050.10 (based on the designated benefit actually paid to the PBGC) is less than the minimum benefit in this paragraph (c), the PBGC will instead pay the minimum benefit. The minimum benefit is the lesser of:

(1) The benefit as determined under the PBGC's rules for paying guaranteed benefits in trusteed plans under subparts A and B of part 4022 of this chapter (treating the deemed distribution date as the termination date for this purpose); or

(2) The benefit based on the designated benefit that should have been paid under § 4050.5.

(d) *Limitation on annuity starting date.* A missing participant (or his or her survivor) may not elect an annuity starting date after the later of—

(1) The required beginning date under section 401(a)(9) of the Code; or

(2) The date when the missing participant (or the survivor) is notified of his or her right to a benefit.

§ 4050.12 Special rules.

(a) *Missing participants located quickly.* Notwithstanding the provisions of §§ 4050.8 through 4050.10, if the PBGC or the plan administrator locates a missing participant within 30 days after the PBGC receives the missing participant's designated benefit, the PBGC may in its discretion return the missing participant's designated benefit to the plan administrator, and the plan administrator must make distribution to the individual in such manner as the PBGC will direct.

(b) *Qualified domestic relations orders.* Plan administrators must and the PBGC will take the provisions of qualified domestic relations orders (QDROs)

under section 206(d)(3) of ERISA or section 414(p) of the Code into account in determining designated benefits and benefit payments by the PBGC, including treating an alternate payee under an applicable QDRO as a missing participant or as a beneficiary of a missing participant, as appropriate, in accordance with the terms of the QDRO. For purposes of calculating the amount of the designated benefit of an alternate payee, the plan administrator must use the assumptions for a missing participant who is a beneficiary under § 4050.5(b).

(c) *Employee contributions*—(1) *Mandatory employee contributions.* Notwithstanding the provisions of § 4050.5, if a missing participant made mandatory contributions (within the meaning of section 4044(a)(2) of ERISA), the missing participant's designated benefit may not be less than the sum of the missing participant's mandatory contributions and interest to the deemed distribution date at the plan's rate or the rate under section 204(c) of ERISA (whichever produces the greater amount).

(2) *Voluntary employee contributions.* (i) *Applicability.* This paragraph (c)(2) applies to any employee contributions that were not mandatory (within the meaning of section 4044(a)(2) of ERISA) to which a missing participant is entitled in connection with the termination of a defined benefit plan.

(ii) *Payment to PBGC.* A plan administrator, in accordance with the missing participant forms and instructions, must pay the employee contributions described in paragraph (c)(2)(i) of this section (together with any earnings thereon) to the PBGC, and must file Schedule MP with the PBGC, by the time the designated benefit is due under § 4050.6. Any such amount must be in addition to the designated benefit and must be separately identified.

(iii) *Payment by PBGC.* In addition to any other amounts paid by the PBGC under §§ 4050.8 through 4050.10, the PBGC will pay any amount paid to it under paragraph (c)(2)(ii) of this section, with interest at the designated benefit interest rate from the date of receipt by the PBGC to the date of payment by the PBGC, in the same manner as described in § 4050.8 (automatic lump sums), except that if the missing participant died before the deemed distribution date and there is no beneficiary, payment will be made to the missing participant's estate.

(d) *Residual assets.* The PBGC will determine, in a manner consistent with the purposes of this part and section 4050 of ERISA, how the provisions of this part apply to any distribution (to participants and beneficiaries who cannot be located) of residual assets remaining after the satisfaction of plan benefits (as defined in § 4041.2 of this chapter) in connection with the termination of a defined benefit plan. Unless the PBGC otherwise determines, the payment of residual assets for a participant or beneficiary who cannot be located, and the submission to the PBGC of the related Schedule MP (or amended Schedule MP), must be made no earlier than the date when the post-distribution certification is filed with the PBGC, and no later than the later of—

(1) The 30th day after the date on which all residual assets have been distributed to all participants and beneficiaries other than those who cannot be located and for whom payment of residual assets is made to the PBGC, and

(2) The date when the post-distribution certification is filed with the PBGC.

(e) *Sufficient distress terminations.* In the case of a plan undergoing a distress termination (under section 4041(c) of ERISA) that is sufficient for at least all guaranteed benefits and that distributes its assets in the manner described in section 4041(b)(3) of ERISA, the benefit assumed to be payable by the plan for purposes of determining the amount of the designated benefit under § 4050.5 is limited to the title IV benefit plus any benefit to which funds under section 4022(c) of ERISA have been allocated.

(f) *Similar rules for later payments.* If the PBGC determines that one or more persons should receive benefits (which may be in addition to benefits already provided) in order for a plan termination to be valid (e.g., upon audit of the termination), and one or more of such individuals cannot be located, the PBGC will determine, in a manner consistent with the purposes of this part

and section 4050 of ERISA, how the provisions of this part apply to such benefits.

(g) *Discretionary extensions.* Any deadline under this part may be extended in accordance with the rules described in § 4041.30 of this chapter.

(h) *Payments beginning after required beginning date.* If the PBGC begins paying an annuity under § 4050.9(a) or 4050.10(a) to a participant or a participant's spouse after the required beginning date under section 401(a)(9)(C) of the Code, the PBGC will pay to the participant or the spouse (or their respective estates) or both, as appropriate, the lump sum equivalent of the past annuity payments the participant and spouse would have received if the PBGC had begun making payments on the required beginning date. The PBGC will also pay lump sum equivalents under this paragraph (g) if the PBGC locates the estate of the participant or spouse after both are deceased. (Nothing in this paragraph (g) will increase the total value of the benefits payable with respect to a missing participant.)

APPENDIX A TO PART 4050—EXAMPLES OF DESIGNATED BENEFIT DETERMINATIONS FOR MISSING PARTICIPANTS UNDER § 4050.5 IN PLANS WITH DEEMED DISTRIBUTION DATES ON AND AFTER AUGUST 17, 1998

The calculation of the designated benefit under § 4050.5 is illustrated by the following examples.

Example 1. Plan A provides that any participant whose benefit has a value at distribution of $3,500 or less will be paid a lump sum, and that no other lump sums will be paid. P, Q, and R are missing participants.

(1) As of the deemed distribution date, the value of P's benefit is $3,000 under plan A's assumptions. Under § 4050.5(a)(1), the plan administrator pays the PBGC $3,000 as P's designated benefit.

(2) As of the deemed distribution date, the value of Q's benefit is $5,200 under plan A's assumptions and $4,700 under the missing participant lump sum assumptions. Under § 4050.5(a)(2), the plan administrator pays the PBGC $4,700 as Q's designated benefit.

(3) As of the deemed distribution date, the value of R's benefit is $4,900 under plan A's assumptions, $3,600 under the missing participant lump sum assumptions, and $4,950 under the missing participant annuity assumptions. Under § 4050.5(a)(3), the plan administrator pays the PBGC $4,950 as R's designated benefit.

Example 2. Plan B provides for a normal retirement age of 65 and permits early commencement of benefits at any age between 60 and 65, with benefits reduced by 5 percent for each year before age 65 that the benefit begins. The qualified joint and 50 percent survivor annuity payable under the terms of the plan requires in all cases a 16 percent reduction in the benefit otherwise payable. The plan does not provide for elective lump sums.

(1) M is a missing participant who separated from service under plan B with a deferred vested benefit. M is age 50 at the deemed distribution date, and has a normal retirement benefit of $1,000 per month payable at age 65 in the form of a single life annuity. M's benefit as of the deemed distribution date has a value greater than $5,000 using either plan assumptions or the missing participant lump sum assumptions. Accordingly, M's designated benefit is to be determined under § 4050.5(a)(3).

(2) For purposes of determining M's designated benefit, M is assumed to be married to a spouse who is also age 50 on the deemed distribution date. M's monthly benefit in the form of the qualified joint and survivor annuity under the plan varies from $840 at age 65 (the normal retirement age) ($1,000 × (1–.16)) to $630 at age 60 (the earliest retirement age) ($1,000 × (1–5 × (.05)) × (1–.16)).

(3) Under § 4050.5(a)(3), M's benefit is to be valued using the missing participant annuity assumptions. The select and ultimate interest rates on Plan B's deemed distribution date are 7.50 percent for the first 20 years and 5.75 percent thereafter. Using these rates and the blended mortality table described in paragraph (2) of the definition of ''missing participant annuity assumptions'' in § 4050.2, the plan administrator determines that the benefit commencing at age 60 is the most valuable benefit (*i.e.*, the benefit at age 60 is more valuable than the benefit at ages 61, 62, 63, 64 or 65). The present value as of the deemed distribution date of each dollar of annual benefit (payable monthly as a joint and 50 percent survivor annuity) is $5.4307 if the benefit begins at age 60. (Because a new spouse may succeed to the survivor benefit, the mortality of the spouse during the deferral period is ignored.) Thus, without adjustment (loading) for expenses, the value of the benefit beginning at age 60 is $41,056 (12 × $630 × 5.4307). The designated benefit is equal to this value plus an expense adjustment of $300, or a total of $41,356.

[62 FR 60440, Nov. 7, 1997, as amended at 63 FR 38306, July 16, 1998]

APPENDIX B TO PART 4050—EXAMPLES OF BENEFIT PAYMENTS FOR MISSING PARTICIPANTS UNDER §§ 4050.8 THROUGH 4050.10

The provisions of §§ 4050.8 through 4050.10 are illustrated by the following examples.

Example 1. Participant M from Plan B (see Example 2 in Appendix A of this part) is located. M's spouse is ten years younger than M. M elects to receive benefits in the form of a joint and 50 percent survivor annuity commencing at age 62.

(1) M's designated benefit was $41,356. The unloaded designated benefit was $41,056. As of Plan B's deemed distribution date (and using the missing participant annuity assumptions), the present value per dollar of annual benefit (payable monthly as a joint and 50 percent survivor annuity commencing at age 62 and reflecting the *actual* age of M's spouse) is $4.7405. Thus, the monthly benefit to M at age 62 is $722 ($41,056 / (4.7405 × 12)). M's spouse will receive $361 (50 percent of $722) per month for life after the death of M.

(2) If M had instead been found to have died on or after the deemed distribution date, and M's spouse wanted benefits to commence when M would have attained age 62, the same calculation would be performed to arrive at a monthly benefit of $361 to M's spouse.

Example 2. Participant P is a missing participant from Plan C, a plan that allows elective lump sums upon plan termination. Plan C's administrator pays a designated benefit of $10,000 to the PBGC on behalf of P, who was age 30 on the deemed distribution date.

(1) P's spouse, S, is located and has a death certificate showing that P died on or after the deemed distribution date with S as spouse. S is the same age as P, and would like survivor benefits to commence immediately, at age 55 (as permitted by the plan). S's benefit is the survivor's share of the joint and 50 percent survivor annuity which is actuarially equivalent, as of the deemed distribution date, to $9,700 (the unloaded designated benefit).

(2) The select and ultimate interest rates on Plan C's deemed distribution date were 7.50 percent for the first 20 years and 5.75 percent thereafter. Using these rates and the blended mortality table described in paragraph (2) of the definition of ''missing participant annuity assumptions'' in § 4050.2, the present value as of the deemed distribution date of each dollar of annual benefit (payable monthly as a joint and 50 percent survivor annuity) is $2.4048 if the benefit begins when S and P would have been age 55. Thus, the monthly benefit to S commencing at age 55 is $168 (50 percent of $9,700 / (2.4048 × 12)). Since P could have elected a lump sum upon plan termination, S may elect a lump sum. S's lump sum is the present value as of the deemed distribution date (using the missing participant annuity assumptions) of the monthly benefit of $168, accumulated with interest at the designated benefit interest rate to the date paid.

SUBCHAPTER F—LIABILITY

PART 4061—AMOUNTS PAYABLE BY THE PENSION BENEFIT GUARANTY CORPORATION

AUTHORITY: 29 U.S.C. 1302(b)(3).

SOURCE: 61 FR 34079, July 1, 1996, unless otherwise noted.

§ 4061.1 Cross-references.

See part 4022 of this chapter regarding benefits payable under terminated single-employer plans and § 4281.47 of this chapter regarding financial assistance to pay benefits under insolvent multiemployer plans.

PART 4062—LIABILITY FOR TERMINATION OF SINGLE-EMPLOYER PLANS

Sec.

4062.1 Purpose and scope.
4062.2 Definitions.
4062.3 Amount and payment of section 4062(b) liability.
4062.4 Determinations of net worth and collective net worth.
4062.5 Net worth record date.
4062.6 Net worth notification and information.
4062.7 Calculating interest on liability and refunds of overpayments.
4062.8 Liability pursuant to section 4062(e).
4062.9 Arrangements for satisfying liability.
4062.10 Method and date of filing; where to file.
4062.11 Computation of time.

AUTHORITY: 29 U.S.C. 1302(b)(3), 1362–1364, 1367, 1368.

SOURCE: 61 FR 34079, July 1, 1996, unless otherwise noted.

§ 4062.1 Purpose and scope.

The purpose of this part is to set forth rules for determination and payment of the liability incurred, under section 4062(b) of ERISA, upon termination of any single-employer plan and, to the extent appropriate, determination of the liability incurred with respect to multiple employer plans under sections 4063 and 4064 of ERISA. This part also sets forth rules for determining the amount of liability incurred under section 4063 of ERISA pursuant to the occurrence of a cessation of operations as described by section 4062(e) of ERISA. The provisions of this part regarding the amount of liability to the PBGC that is incurred upon termination of a single-employer plan apply with respect to a plan for which a notice of intent to terminate under section 4041(c) of ERISA is issued or proceedings to terminate under section 4042 of ERISA are instituted after December 17, 1987. Those provisions also apply, to the extent described in paragraph (a) of this section, to the amount of liability for withdrawal from a multiple employer plan after that date.

[61 FR 34079, July 1, 1996, as amended at 71 FR 34822, June 16, 2006]

§ 4062.2 Definitions.

The following terms are defined in § 4001.2 of this chapter: benefit liabilities, Code, contributing sponsor, controlled group, ERISA, fair market value, guaranteed benefit, multiple employer plan, notice of intent to terminate, PBGC, person, plan, plan administrator, proposed termination date, single-employer plan, and termination date.

In addition, for purposes of this part, the term *collective net worth of persons subject to liability in connection with a plan termination* means the sum of the individual net worths of all persons that have individual net worths which are greater than zero and that (as of the termination date) are contributing sponsors of the terminated plan or members of their controlled groups, as determined in accordance with section 4062(d)(1) of ERISA and § 4062.4 of this part.

§ 4062.3 Amount and payment of section 4062(b) liability.

(a) *Amount of liability*—(1) *General rule.* Except as provided in paragraph (a)(2) of this section, the amount of section 4062(b) liability is the total amount (as of the termination date) of the unfunded benefit liabilities (within the meaning of section 4001(a)(18) of ERISA) to all participants and beneficiaries under the plan, together with

interest calculated from the termination date in accordance with § 4062.7.

(2) *Special rule in case of subsequent finding of inability to pay guaranteed benefits.* In any distress termination proceeding under section 4041(c) of ERISA and part 4041 of this chapter in which (as described in section 4041(c)(3)(C)(ii) of ERISA), after a determination that the plan is sufficient for benefit liabilities or for guaranteed benefits, the plan administrator finds that the plan is or will be insufficient for guaranteed benefits and the PBGC concurs with that finding, or the PBGC makes such a finding on its own initiative, actuarial present values shall be determined as of the date of the notice to, or the finding by, the PBGC of insufficiency for guaranteed benefits.

(b) *Payment of liability.* Section 4062(b) liability is due and payable as of the termination date, in cash or securities acceptable to the PBGC, except that, as provided in § 4062.9(c), the PBGC shall prescribe commercially reasonable terms for payment of so much of such liability as exceeds 30 percent of the collective net worth of persons subject to liability in connection with a plan termination. The PBGC may make alternative arrangements, as provided in § 4062.9(b).

[61 FR 34079, July 1, 1996, as amended at 71 FR 34822, June 16, 2006]

§ 4062.4 Determinations of net worth and collective net worth.

(a) *General rules.* When a contributing sponsor, or member(s) of a contributing sponsor's controlled group, notifies and submits information to the PBGC in accordance with § 4062.6, the PBGC shall determine the net worth, as of the net worth record date, of that contributing sponsor and any members of its controlled group based on the factors set forth in paragraph (c) of this section and shall include the value of any assets that it determines, pursuant to paragraph (d) of this section, have been improperly transferred. In making such determinations, the PBGC will consider information submitted pursuant to § 4062.6. The PBGC shall then determine the collective net worth of persons subject to liability in connection with a plan termination.

(b) *Partnerships and sole proprietorships.* In the case of a person that is a partnership or a sole proprietorship, net worth does not include the personal assets and liabilities of the partners or sole proprietor, except for the assets included pursuant to paragraph (d) of this section. As used in this paragraph, ''personal assets'' are those assets which do not produce income for the business being valued or are not used in the business.

(c) *Factors for determining net worth.* A person's net worth is equal to its fair market value and fair market value shall be determined on the basis of the factors set forth below, to the extent relevant; different factors may be considered with respect to different portions of the person's operations.

(1) A bona fide sale of, agreement to sell, or offer to purchase or sell the business of the person made on or about the net worth record date.

(2) A bona fide sale of, agreement to sell, or offer to purchase or sell stock or a partnership interest in the person, made on or about the net worth record date.

(3) If stock in the person is publicly traded, the price of such stock on or about the net worth record date.

(4) The price/earnings ratios and prices of stocks of similar trades or businesses on or about the net worth record date.

(5) The person's economic outlook, as reflected by its earnings and dividend projections, current financial condition, and business history.

(6) The economic outlook for the person's industry and the market it serves.

(7) The appraised value, including the liquidating value, of the person's tangible and intangible assets.

(8) The value of the equity assumed in a plan of reorganization of a person in a case under title 11, United States Code, or any similar law of a state or political subdivision thereof.

(9) Any other factor relevant in determining the person's net worth.

(d) *Improper transfers.* A person's net worth shall include the value of any assets transferred by the person which the PBGC determines were improperly transferred for the purpose, as inferred from all the facts and circumstances,

and with the effect of avoiding liability under this part. Assets ''improperly transferred'' include but are not limited to assets sold, leased or otherwise transferred for less than adequate consideration and assets distributed as gifts, capital distributions and stock redemptions inconsistent with past practices of the employer. The word *transfer* includes but is not limited to sales, assignments, pledges, leases, gifts and dividends.

§ 4062.5 Net worth record date.

(a) *General.* Unless the PBGC establishes an earlier net worth record date pursuant to paragraph (b) of this section, the net worth record date, for all purposes under this part, is the plan's termination date.

(b) *Establishment of an earlier net worth record date.* At any time during a termination proceeding, the PBGC, in order to prevent undue loss to or abuse of the plan termination insurance system, may establish as the net worth record date an earlier date during the 120-day period ending with the termination date.

(c) *Notification.* Whenever the PBGC establishes an earlier net worth record date, it shall immediately give liable person(s) written notification of that fact. The written notice may also include a request for additional information, as provided in § 4062.6(a)(3).

§ 4062.6 Net worth notification and information.

(a) *General.* (1) A contributing sponsor or member of the contributing sponsor's controlled group that believes section 4062(b) liability exceeds 30 percent of the collective net worth of persons subject to liability in connection with a plan termination shall—

(i) So notify the PBGC by the 90th day after the notice of intent to terminate is filed with the PBGC or, if no notice of intent to terminate is filed with the PBGC and the PBGC institutes proceedings under section 4042 of ERISA, within 30 days after the establishment of the plan's termination date in such proceedings; and

(ii) Submit to the PBGC the information specified in paragraph (b) of this section with respect to the contributing sponsor and each member of the contributing sponsor's controlled group (if any)—

(A) By the 120th day after the proposed termination date, or

(B) If no notice of intent to terminate is filed with the PBGC and the PBGC institutes proceedings under section 4042 of ERISA, within 120 days after the establishment of the plan's termination date in such proceedings.

(2) If a contributing sponsor or a member of its controlled group complies with the requirements of paragraph (a)(1) of this section, the PBGC will consider the requirements to be satisfied by all members of that controlled group.

(3) The PBGC may require any person subject to liability—

(i) To submit the information specified in paragraph (b) of this section within a shorter period whenever the PBGC believes that its ability to obtain information or payment of liability is in jeopardy, and

(ii) To submit additional information within 30 days, or a different specified time, after the PBGC's written notification that it needs such information to make net worth determinations.

(4) If a provision of paragraph (b) of this section or a PBGC notice specifies information previously submitted to the PBGC, a person may respond by identifying the previous submission in which the response was provided.

(b) *Net worth information.* The following information specifications apply, individually, with respect to each person subject to liability:

(1) An estimate, made in accordance with § 4062.4, of the person's net worth on the net worth record date and a statement, with supporting evidence, of the basis for the estimate.

(2) A copy of the person's audited (or if not available, unaudited) financial statements for the 5 full fiscal years plus any partial fiscal year preceding the net worth record date. The statements must include balance sheets, income statements, and statements of changes in financial position and must be accompanied by the annual reports, if available.

(3) A statement of all sales and copies of all offers or agreements to buy or sell at least 25 percent of the person's

assets or at least 5 percent of the person's stock or partnership interest, made on or about the net worth record date.

(4) A statement of the person's current financial condition and business history.

(5) A statement of the person's business plans, including projected earnings and, if available, dividend projections.

(6) Any appraisal of the person's fixed and intangible assets made on or about the net worth record date.

(7) A copy of any plan of reorganization, whether or not confirmed, with respect to a case under title 11, United States Code, or any similar law of a state or political subdivision thereof, involving the person and occurring within 5 calendar years prior to or any time after the net worth record date.

(c) *Incomplete submission*. If a contributing sponsor and/or members of the contributing sponsor's controlled group do not submit all of the information required pursuant to paragraph (a) of this section (other than the estimate described in paragraph (b)(1) of this section) with respect to each person subject to liability, the PBGC may base determinations of net worth and the collective net worth of persons subject to liability in connection with a plan termination on any such information that such person(s) did submit, as well as any other pertinent information that the PBGC may have. In general, the PBGC will view information as of a date further removed from the net worth record date as having less probative value than information as of a date nearer to the net worth record date.

§ 4062.7 Calculating interest on liability and refunds of overpayments.

(a) *Interest*. Whether or not the PBGC has granted deferred payment terms pursuant to § 4062.9, the amount of liability under this part includes interest, from the termination date, on any unpaid portion of the liability. Such interest accrues at the rate set forth in paragraph (c) of this section until the liability is paid in full and is compounded daily. When liability under this part is paid in more than one payment, the PBGC will apply each payment to the satisfaction of accrued interest and then to the reduction of principal.

(b) *Refunds*. If a contributing sponsor or member(s) of a contributing sponsor's controlled group pays the PBGC an amount that exceeds the full amount of liability under this part, the PBGC shall refund the excess amount, with interest at the rate set forth in paragraph (c) of this section. Interest on an overpayment accrues from the later of the date of the overpayment or 10 days prior to the termination date until the date of the refund and is compounded daily.

(c) *Interest rate*. The interest rate on liability under this part and refunds thereof is the annual rate prescribed in section 6601(a) of the Code, and will change whenever the interest rate under section 6601(a) of the Code changes.

[61 FR 34079, July 1, 1996, as amended at 71 FR 34822, June 16, 2006]

§ 4062.8 Liability pursuant to section 4062(e).

(a) *Liability amount*. If, pursuant to section 4062(e) of ERISA, an employer ceases operations at a facility in any location and, as a result of such cessation of operations, more than 20% of the total number of the employer's employees who are participants under a plan established and maintained by the employer are separated from employment, the PBGC will determine the amount of liability under section 4063(b) of ERISA to be the amount described in section 4062 of ERISA for the entire plan, as if the plan had been terminated by the PBGC immediately after the date of the cessation of operations, multiplied by a fraction—

(1) The numerator of which is the number of the employer's employees who are participants under the plan and are separated from employment as a result of the cessation of operations; and

(2) The denominator of which is the total number of the employer's current employees, as determined immediately before the cessation of operations, who are participants under the plan.

(b) *Example*. Company X sponsors a pension plan with 50,000 participants of which 20,000 are current employees and

30,000 are retirees or deferred vested participants. On a PBGC termination basis, the plan is underfunded by $80 million. Company X ceases operations at a facility resulting in the separation from employment of 5,000 employees, all of whom are participants in the pension plan. A section 4062(e) event has occurred, and the PBGC will determine the amount of employer liability under section 4063(b) of ERISA. The numerator described in paragraph (a)(1) of this section is 5,000 and the denominator described in paragraph (a)(2) of this section is 20,000. Therefore, the amount of liability under section 4063(b) of ERISA pursuant to section 4062(e) is $20 million (5,000/20,000 × $80 million).

[71 FR 34822, June 16, 2006]

§ 4062.9 Arrangements for satisfying liability.

(a) *General*. The PBGC will defer payment, or agree to other arrangements for the satisfaction, of any portion of liability to the PBGC only when—

(1) As provided in paragraph (b) of this section, the PBGC determines that such action is necessary to avoid the imposition of a severe hardship and that there is a reasonable possibility that the terms so prescribed will be met and the entire liability paid; or

(2) As provided in paragraph (c) of this section, the PBGC determines that section 4062(b) liability exceeds 30 percent of the collective net worth of persons subject to liability in connection with a plan termination.

(b) *Upon request*. If the PBGC determines that such action is necessary to avoid the imposition of a severe hardship on persons that are or may become liable under section 4062, 4063, or 4064 of ERISA and that there is a reasonable possibility that persons so liable will be able to meet the terms prescribed and pay the entire liability, the PBGC, in its discretion and when so requested in accordance with paragraph (b)(2) of this section, may grant deferred payment or other terms for the satisfaction of such liability.

(1) In determining what, if any, terms to grant, the PBGC shall examine the following factors:

(i) The ratio of the liability to the net worth of the person making the request and (if different) to the collective net worth of persons subject to liability in connection with a plan termination.

(ii) The overall financial condition of persons that are or may become liable, including, with respect to each such person—

(A) The amounts and terms of existing debts;

(B) The amount and availability of liquid assets;

(C) Current and past cash flow; and

(D) Projected cash flow, including a projection of the impact on operations that would be caused by the immediate full payment of the liability.

(iii) The availability of credit from private sector sources to the person making the request and to other liable persons.

(2) A contributing sponsor or member of a contributing sponsor's controlled group may request deferred payment or other terms for the satisfaction of any portion of the liability under section 4062, 4063, or 4064 of ERISA at any time by filing a written request. The request must include the information specified in § 4062.6(b), except that—

(i) If the request is filed one year or more after the net worth record date, references to ''the net worth record date'' in § 4062.6(b) shall be replaced by ''the most recent annual anniversary of the net worth record date''; and

(ii) Information that already has been submitted to the PBGC need not be submitted again.

(c) *Liability exceeding 30 percent of collective net worth*. If the PBGC determines that section 4062(b) liability exceeds 30 percent of the collective net worth of persons subject to the liability, the PBGC will, after making a reasonable effort to reach agreement with such persons, prescribe commercially reasonable terms for payment of so much of the liability as exceeds 30 percent of the collective net worth of such persons. The terms prescribed by the PBGC for payment of that portion of the liability (including interest) will provide for deferral of 50 percent of any amount otherwise payable for any year if a person subject to such liability demonstrates to the satisfaction of the

PBGC that no person subject to such liability has any individual pre-tax profits (within the meaning of section 4062(d)(2) of ERISA) for such person's last full fiscal year ending during that year.

(d) *Interest*. Interest on unpaid liability is calculated in accordance with § 4062.7(a).

(e) *Security during period of deferred payment*. As a condition to the granting of deferred payment terms, PBGC may, in its discretion, require that the liable person(s) provide PBGC with such security for its obligations as the PBGC deems adequate.

[61 FR 34079, July 1, 1996. Redesignated at 71 FR 34822, June 16, 2006]

§ 4062.10 Method and date of filing; where to file.

(a) *Method of filing*. The PBGC applies the rules in subpart A of part 4000 of this chapter to determine permissible methods of filing with the PBGC under this part. Payment of liability must be clearly designated as such and include the name of the plan.

(b) *Filing date*. The PBGC applies the rules in subpart C of part 4000 of this chapter to determine the date that a submission under this part was filed with the PBGC.

(c) *Where to file*. See § 4000.4 of this chapter for information on where to file.

[68 FR 61354, Oct. 28, 2003. Redesignated at 71 FR 34822, June 16, 2006]

§ 4062.11 Computation of time.

The PBGC applies the rules in subpart D of part 4000 of this chapter to compute any time period under this part. However, for purposes of determining the amount of an interest charge under § 4062.7, the rule in § 4000.43(a) of this chapter governing periods ending on weekends or Federal holidays does not apply.

[68 FR 61354, Oct. 28, 2003. Redesignated at 71 FR 34822, June 16, 2006]

PART 4063—WITHDRAWAL LIABILITY; PLANS UNDER MULTIPLE CONTROLLED GROUPS

AUTHORITY: 29 U.S.C. 1302(b)(3).

SOURCE: 61 FR 34082, July 1, 1996, unless otherwise noted.

§ 4063.1 Cross-references.

(a) Part 4062 of this chapter sets forth rules for determination and payment of the liability incurred, under section 4062(b) of ERISA, upon termination of any single-employer plan and, to the extent appropriate, determination of the liability incurred with respect to multiple employer plans under sections 4063 and 4064 of ERISA. Part 4062 also sets forth rules for determining the amount of liability incurred under section 4063 of ERISA pursuant to the occurrence of a cessation of operations as described by section 4062(e) of ERISA.

(b) Part 4068 of this chapter includes rules regarding the PBGC's lien under section 4068 of ERISA with respect to liability arising under section 4062, 4063, or 4064.

[61 FR 34082, July 1, 1996, as amended at 71 FR 34822, June 16, 2006]

PART 4064—LIABILITY ON TERMINATION OF SINGLE-EMPLOYER PLANS UNDER MULTIPLE CONTROLLED GROUPS

AUTHORITY: 29 U.S.C. 1302(b)(3).

SOURCE: 61 FR 34082, July 1, 1996, unless otherwise noted.

§ 4064.1 Cross-references.

(a) Part 4062, subpart A, of this chapter sets forth rules for determination and payment of the liability incurred under section 4062(b) of ERISA, upon termination of any single-employer plan and, to the extent appropriate, determination of the liability incurred with respect to multiple employer plans under sections 4063 and 4064 of ERISA.

(b) Part 4068 of this chapter includes rules regarding the PBGC's lien under section 4068 of ERISA with respect to liability arising under section 4062, 4063, or 4064.

SUBCHAPTER G—ANNUAL REPORTING REQUIREMENTS

PART 4065—ANNUAL REPORT

Sec.
4065.1 Purpose and scope.
4065.2 Definitions.
4065.3 Filing requirement.

AUTHORITY: 29 U.S.C. 1302(b)(3), 1365.

SOURCE: 61 FR 34082, July 1, 1996, unless otherwise noted.

§ 4065.1 Purpose and scope.

The purpose of this part is to specify the form and content of the Annual Report required by section 4065 of ERISA. This part applies to all plans covered by title IV of ERISA.

§ 4065.2 Definitions.

The following terms are defined in § 4001.2 of this chapter: ERISA, IRS, PBGC, and plan.

§ 4065.3 Filing requirement.

(a) The requirement to report the occurrence of a reportable event under section 4043 of ERISA in the Annual Report is waived.

(b) Plan administrators shall file the Annual Report on IRS/DOL/PBGC Form 5500, 5500–C, 5500–K or 5500–R, as appropriate, in accordance with the instructions therein.

(Approved by the Office of Management and Budget under control number 1212–0026)

[61 FR 34082, July 1, 1996, as amended at 61 FR 63998, Dec. 2, 1996]

SUBCHAPTER H—ENFORCEMENT PROVISIONS

PART 4067—RECOVERY OF LIABILITY FOR PLAN TERMINATIONS

AUTHORITY: 29 U.S.C. 1302, 1367.

SOURCE: 61 FR 34082, July 1, 1996, unless otherwise noted.

§ 4067.1 Cross-reference.

Section 4062.8 of this chapter contains rules on deferred payment and other arrangements for satisfaction of liability to the PBGC after termination of single-employer plans.

PART 4068—LIEN FOR LIABILITY

Sec.
4068.1 Purpose; cross-references.
4068.2 Definitions.
4068.3 Notification of and demand for liability.
4068.4 Lien.

AUTHORITY: 29 U.S.C. 1302(b)(3), 1362–1364, 1367–1368.

SOURCE: 61 FR 34083, July 1, 1996, unless otherwise noted.

§ 4068.1 Purpose; cross-references.

This part contains rules regarding the PBGC's lien under section 4068 of ERISA with respect to liability arising under section 4062, 4063, or 4064 of ERISA.

§ 4068.2 Definitions.

The following terms are defined in § 4001.2 of this chapter: ERISA, PBGC, person, plan, and termination date.

Collective net worth of persons subject to liability in connection with a plan termination has the meaning in § 4062.2.

§ 4068.3 Notification of and demand for liability.

(a) *Notification of liability*. Except as provided in paragraph (c) of this section, when the PBGC has determined the amount of the liability under part 4062 and whether or not the liability has already been paid, the PBGC shall notify liable person(s) in writing of the amount of the liability. If the full liability has not yet been paid, the notification will include a request for payment of the full liability and will indicate that, as provided in § 4062.8, the PBGC will prescribe commercially reasonable terms for payment of so much of the liability as it determines exceeds 30 percent of the collective net worth of persons subject to liability in connection with a plan termination. In all cases, the notification will include a statement of the right to appeal the assessment of liability pursuant to part 4003.

(b) *Demand for liability*. Except as provided in paragraph (c) of this section, if person(s) liable to the PBGC fail to pay the full liability and no appeal is filed or an appeal is filed and the decision on appeal finds liability, the PBGC will issue a demand letter for the liability—

(1) If no appeal is filed, upon the expiration of time to file an appeal under part 4003; or

(2) If an appeal is filed, upon issuance of a decision on the appeal finding that there is liability under this part.

The demand letter will indicate that, as provided in § 4062.8, the PBGC will prescribe commercially reasonable terms for payment of so much of the liability as it determines exceeds 30 percent of the collective net worth of such persons.

(c) *Special rule*. Notwithstanding paragraphs (a) and (b) of this section, the PBGC may, in any case in which it believes that its ability to assert or obtain payment of liability is in jeopardy, issue a demand letter for the liability under this part immediately upon determining the liability, without first issuing a notification of liability pursuant to paragraph (a) of this section. When the PBGC issues a demand letter under this paragraph, there is no right to an appeal pursuant to part 4003 of this chapter.

§ 4068.4 Lien.

If any person liable to the PBGC under section 4062, 4063, or 4064 of ERISA fails or refuses to pay the full amount of such liability within the time specified in the demand letter issued under § 4068.3, the PBGC shall have a lien in the amount of the liability, including interest, arising as of the

plan's termination date, upon all property and rights to property, whether real or personal, belonging to that person, except that such lien may not be in an amount in excess of 30 percent of the collective net worth of all persons described in section 4062(a) of ERISA and part 4062 of this chapter.

PART 4071—PENALTIES FOR FAILURE TO PROVIDE CERTAIN NOTICES OR OTHER MATERIAL INFORMATION

Sec.

4071.1 Purpose and scope.
4071.2 Definitions.
4071.3 Penalty amount.

AUTHORITY: 28 U.S.C. 2461 note, as amended by sec. 31001(s)(1), Pub.L. 104–134, 110 Stat. 1321–373; 29 U.S.C. 1302(b)(3), 1371.

SOURCE: 62 FR 36994, July 10, 1997, unless otherwise noted.

§ 4071.1 Purpose and scope.

This part specifies the maximum daily amount of penalties that may be assessed by the PBGC under ERISA section 4071 for certain failures to provide notices or other material information, as such amount has been adjusted to account for inflation pursuant to the Federal Civil Monetary Penalty Inflation Adjustment Act of 1990, as amended by the Debt Collection Improvement Act of 1996.

§ 4071.2 Definitions.

The following terms are defined in § 4001.2 of this chapter: ERISA and PBGC.

§ 4071.3 Penalty amount.

The maximum daily amount of the penalty under section 4071 of ERISA shall be $1,100.

SUBCHAPTER I—WITHDRAWAL LIABILITY FOR MULTIEMPLOYER PLANS

PART 4203—EXTENSION OF SPECIAL WITHDRAWAL LIABILITY RULES

Sec.
4203.1 Purpose and scope.
4203.2 Definitions.
4203.3 Plan adoption of special withdrawal rules.
4203.4 Requests for PBGC approval of plan amendments.
4203.5 PBGC action on requests.
4203.6 OMB control number.

AUTHORITY: 29 U.S.C. 1302(b)(3).

SOURCE: 61 FR 34083, July 1, 1996, unless otherwise noted.

§ 4203.1 Purpose and scope.

(a) *Purpose*. The purpose of this part is to prescribe procedures whereby a multiemployer plan may, pursuant to sections 4203(f) and 4208(e)(3) of ERISA, request the PBGC to approve a plan amendment which establishes special complete or partial withdrawal liability rules.

(b) *Scope*. This part applies to a multiemployer pension plan covered by title IV of ERISA.

§ 4203.2 Definitions.

The following terms are defined in § 4001.2 of this chapter: complete withdrawal, employer, ERISA, multiemployer plan, PBGC, person, plan, plan sponsor, and plan year.

§ 4203.3 Plan adoption of special withdrawal rules.

(a) *General rule*. A plan may, subject to the approval of the PBGC, establish by plan amendment special complete or partial withdrawal liability rules. A complete withdrawal liability rule adopted pursuant to this part shall be similar to the rules for the construction and entertainment industries described in section 4203 (b) and (c) of ERISA. A partial withdrawal liability rule adopted pursuant to this part shall be consistent with the complete withdrawal rule adopted by the plan. A plan amendment adopted under this part may not be put into effect until it is approved by the PBGC.

(b) *Discretionary provisions of the plan amendment*. A plan amendment adopted pursuant to this part may—

(1) Cover an entire industry or industries, or be limited to a segment of an industry; and

(2) Apply to cessations of the obligation to contribute that occurred prior to the adoption of the amendment.

§ 4203.4 Requests for PBGC approval of plan amendments.

(a) *Filing of request*—(1) *In general*. A plan shall apply to the PBGC for approval of a plan amendment which establishes special complete or partial withdrawal liability rules. The request for approval shall be filed after the amendment is adopted. PBGC approval shall also be required for any subsequent modification of the plan amendment, other than a repeal of the amendment which results in employers being subject to the general statutory rules on withdrawal.

(2) *Method of filing*. The PBGC applies the rules in subpart A of part 4000 of this chapter to determine permissible methods of filing with the PBGC under this part.

(b) *Who may request*. The plan sponsor, or a duly authorized representative acting on behalf of the plan sponsor, shall sign and submit the request.

(c) *Where to file*. See § 4000.4 of this chapter for information on where to file.

(d) *Information*. Each request shall contain the following information:

(1) The name and address of the plan for which the plan amendment is being submitted, and the telephone number of the plan sponsor or its authorized representative.

(2) A copy of the executed amendment, including the proposed effective date.

(3) A statement certifying that notice of the adoption of the amendment and the request for approval filed under

this part has been given to all employers who have an obligation to contribute under the plan and to all employee organizations representing employees covered under the plan.

(4) A statement indicating how the withdrawal rules in the plan amendment would operate in the event of a sale of assets by a contributing employer or the cessation of the obligation to contribute or the cessation of covered operations by all employers.

(5) A copy of the plan's most recent actuarial valuation.

(6) For each of the previous five plan years, information on the number of plan participants by category (active, retired and separate vested) and a complete financial statement. This requirement may be satisfied by the submission for each of those years of Form 5500, including schedule B, or similar reports required under prior law.

(7) A detailed description of the industry to which the plan amendment will apply, including information sufficient to demonstrate the effect of withdrawals on the plan's contribution base, and information establishing industry characteristics which would indicate that withdrawals in the industry do not typically have an adverse effect on the plan's contribution base. Such industry characteristics include the mobility of employees, the intermittent nature of employment, the project-by-project nature of the work, extreme fluctuations in the level of an employer's covered work under the plan, the existence of a consistent pattern of entry and withdrawal by employers, and the local nature of the work performed.

(e) *Supplemental information*. In addition to the information described in paragraph (d) of this section, a plan may submit any other information it believes is pertinent to its request. The PBGC may require the plan sponsor to submit any other information the PBGC determines it needs to review a request under this part.

[61 FR 34083, July 1, 1996, as amended at 68 FR 61354, Oct. 28, 2003]

§ 4203.5 PBGC action on requests.

(a) *General*. The PBGC shall approve a plan amendment providing for the application of special complete or partial withdrawal liability rules upon a determination by the PBGC that the plan amendment—

(1) Will apply only to an industry that has characteristics that would make use of the special withdrawal rules appropriate; and

(2) Will not pose a significant risk to the insurance system.

(b) *Notice of pendency of request*. As soon as practicable after receiving a request for approval of a plan amendment containing all the information required under § 4203.4, the PBGC shall publish a notice of the pendency of the request in the FEDERAL REGISTER. The notice shall contain a summary of the request and invite interested persons to submit written comments to the PBGC concerning the request. The notice will normally provide for a comment period of 45 days.

(c) *PBGC decision on request*. After the close of the comment period, PBGC shall issue its decision in writing on the request for approval of a plan amendment. Notice of the decision shall be published in the FEDERAL REGISTER.

§ 4203.6 OMB control number.

The collections of information contained in this part have been approved by the Office of Management and Budget under OMB control number 1212–0050.

PART 4204—VARIANCES FOR SALE OF ASSETS

Subpart A—General

Sec.
4204.1 Purpose and scope.
4204.2 Definitions.

Subpart B—Variance of the Statutory Requirements

4204.11 Variance of the bond/escrow and sale-contract requirements.
4204.12 *De minimis* transactions.
4204.13 Net income and net tangible assets tests.

Subpart C—Procedures for Individual and Class Variances or Exemptions

4204.21 Requests to PBGC for variances and exemptions.
4204.22 PBGC action on requests.

AUTHORITY: 29 U.S.C. 1302(b)(3), 1384(c).

SOURCE: 61 FR 34084, July 1, 1996, unless otherwise noted.

Subpart A—General

§ 4204.1 Purpose and scope.

(a) *Purpose.* Under section 4204 of ERISA, an employer that ceases covered operations under a multiemployer plan, or ceases to have an obligation to contribute for such operations, because of a bona fide, arm's-length sale of assets to an unrelated purchaser does not incur withdrawal liability if certain conditions are met. One condition is that the sale contract provide that the seller will be secondarily liable if the purchaser withdraws from the plan within five years and does not pay its withdrawal liability. Another condition is that the purchaser furnish a bond or place funds in escrow, for a period of five plan years, in a prescribed amount. Section 4204 also authorizes the PBGC to provide for variances or exemptions from these requirements. Subpart B of this part provides variances and exemptions from the requirements for certain sales of assets. Subpart C of this part establishes procedures under which a purchaser or seller may, when the conditions set forth in subpart B are not satisfied or when the parties decline to provide certain financial information to the plan, request the PBGC to grant individual or class variances or exemptions from the requirements.

(b) *Scope.* In general, this part applies to any sale of assets described in section 4204(a)(1) of ERISA. However, this part does not apply to a sale of assets involving operations for which the seller is obligated to contribute to a plan described in section 404(c) of the Code, or a continuation of such a plan, unless the plan is amended to provide that section 4204 applies.

§ 4204.2 Definitions.

The following terms are defined in § 4001.2 of this chapter: Code, employer, ERISA, IRS, multiemployer plan, PBGC, person, plan, plan administrator, plan sponsor, and plan year.

In addition, for purposes of this part:

Date of determination means the date on which a seller ceases covered operations or ceases to have an obligation to contribute for such operations as a result of a sale of assets within the meaning of section 4204(a) of ERISA.

Net income after taxes means revenue minus expenses after taxes (excluding extraordinary and non-recurring income or expenses), as presented in an audited financial statement or, in the absence of such statement, in an unaudited financial statement, each prepared in conformance with generally accepted accounting principles.

Net tangible assets means tangible assets (assets other than licenses, patents copyrights, trade names, trademarks, goodwill, experimental or organizational expenses, unamortized debt discounts and expenses and all other assets which, under generally accepted accounting principles, are deemed intangible) less liabilities (other than pension liabilities). Encumbered assets shall be excluded from net tangible assets only to the extent of the amount of the encumbrance.

Purchaser means a purchaser described in section 4204(a)(1) of ERISA.

Seller means a seller described in section 4204(a)(1) of ERISA.

Subpart B—Variance of the Statutory Requirements

§ 4204.11 Variance of the bond/escrow and sale-contract requirements.

(a) *General rule.* A purchaser's bond or escrow under section 4204(a)(1)(B) of ERISA and the sale-contract provision under section 4204(a)(1)(C) are not required if the parties to the sale inform the plan in writing of their intention that the sale be covered by section 4204 of ERISA and demonstrate to the satisfaction of the plan that at least one of the criteria contained in § 4204.12 or § 4204.13(a) is satisfied.

(b) *Requests after posting of bond or establishment of escrow.* A request for a variance may be submitted at any time. If, after a purchaser has posted a bond or placed money in escrow pursuant to section 4204(a)(1)(B) of ERISA, the purchaser demonstrates to the satisfaction of the plan that the criterion in either § 4204.13 (a)(1) or (a)(2) is satisfied, then the bond shall be cancelled or the amount in escrow shall be refunded. For purposes of considering a request after the bond or escrow is in

place, the words ''the year preceding the date of the variance request'' shall be substituted for ''the date of determination'' for the first mention of that term in both § 4204.13 (a)(1) and (a)(2). In addition, in determining the purchaser's average net income after taxes under § 4204.13(a)(1), for any year included in the average for which the net income figure does not reflect the interest expense incurred with respect to the sale, the purchaser's net income shall be reduced by the amount of interest paid with respect to the sale in the fiscal year following the date of determination.

(c) *Information required.* A request for a variance shall contain financial or other information that is sufficient to establish that one of the criteria in § 4204.12 or § 4204.13(a) is satisfied. A request on the basis of either § 4204.13 (a)(1) or (a)(2) shall also include a copy of the purchaser's audited (if available) or (if not) unaudited financial statements for the specified time period.

(d) *Limited exemption during pendency of request.* Provided that all of the information required to be submitted is submitted before the first day of the first plan year beginning after the sale, a plan may not, pending its decision on the variance, require a purchaser to post a bond or place an amount in escrow pursuant to section 4204(a)(1)(B). In the event a bond or escrow is not in place pursuant to the preceding sentence, and the plan determines that the request does not qualify for a variance, the purchaser shall comply with section 4204(a)(1)(B) within 30 days after the date on which it receives notice of the plan's decision.

(e) *Method and date of issuance.* The PBGC applies the rules in subpart B of part 4000 of this chapter to determine permissible methods of issuance under this subpart. The PBGC applies the rules in subpart C of part 4000 of this chapter to determine the date that an issuance under this subpart was provided.

(Approved by the Office of Management and Budget under control number 1212–0021)

[61 FR 34084, July 1, 1996, as amended at 68 FR 61355, Oct. 28, 2003]

§ 4204.12 *De minimis* transactions.

The criterion under this section is that the amount of the bond or escrow does not exceed the lesser of $250,000 or two percent of the average total annual contributions made by all employers to the plan, for the purposes of section 412(b)(3)(A) of the Code, for the three most recent plan years ending before the date of determination. For this purpose, ''contributions made'' shall have the same meaning as the term has under § 4211.12(a) of this chapter.

§ 4204.13 Net income and net tangible assets tests.

(a) *General.* The criteria under this section are that either—

(1) *Net income test.* The purchaser's average net income after taxes for its three most recent fiscal years ending before the date of determination (as defined in § 4204.12), reduced by any interest expense incurred with respect to the sale which is payable in the fiscal year following the date of determination, equals or exceeds 150 percent of the amount of the bond or escrow required under ERISA section 4204(a)(1)(B); or

(2) *Net tangible assets test.* The purchaser's net tangible assets at the end of the fiscal year preceding the date of determination (as defined in § 4204.12), equal or exceed—

(i) If the purchaser was not obligated to contribute to the plan before the sale, the amount of unfunded vested benefits allocable to the seller under section 4211 (with respect to the purchased operations), as of the date of determination, or

(ii) If the purchaser was obligated to contribute to the plan before the sale, the sum of the amount of unfunded vested benefits allocable to the purchaser and to the seller under ERISA section 4211 (with respect to the purchased operations), each as of the date of determination.

(b) *Special rule when more than one plan is covered by request.* For the purposes of paragraphs (a)(1) and (a)(2), if the transaction involves the assumption by the purchaser of the seller's obligation to contribute to more than one multiemployer plan, then the total amount of the bond or escrow or of the unfunded vested benefits, as applicable,

for all of the plans with respect to which the purchaser has not posted a bond or escrow shall be used to determine whether the applicable test is met.

(c) *Non-applicability of tests in event of purchaser's insolvency*. A purchaser will not qualify for a variance under this subpart pursuant to paragraph (a)(1) or (a)(2) of this section if, as of the earlier of the date of the plan's decision on the variance request or the first day of the first plan year beginning after the date of determination, the purchaser is the subject of a petition under title 11, United States Code, or of a proceeding under similar provisions of state insolvency laws.

Subpart C—Procedures for Individual and Class Variances or Exemptions

§ 4204.21 Requests to PBGC for variances and exemptions.

(a) *Filing of request*—(1) *In general*. If a transaction covered by this part does not satisfy the conditions set forth in subpart B of this part, or if the parties decline to provide to the plan privileged or confidential financial information within the meaning of section 552(b)(4) of the Freedom of Information Act (5 U.S.C. 552), the purchaser or seller may request from the PBGC an exemption or variance from the requirements of section 4204(a)(1)(B) and (C) of ERISA.

(2) *Method of filing*. The PBGC applies the rules in subpart A of part 4000 of this chapter to determine permissible methods of filing with the PBGC under this subpart.

(b) *Who may request*. A purchaser or a seller may file a request for a variance or exemption. The request may be submitted by one or more duly authorized representatives acting on behalf of the party or parties. When a contributing employer withdraws from a plan as a result of related sales of assets involving several purchasers, or withdraws from more than one plan as a result of a single sale, the application may request a class variance or exemption for all the transactions.

(c) *Where to file*. See § 4000.4 of this chapter for information on where to file.

(d) *Information*. Each request shall contain the following information:

(1) The name and address of the plan or plans for which the variance or exemption is being requested, and the telephone number of the plan administrator of each plan.

(2) For each plan described in paragraph (d)(1) of this section, the nine-digit Employer Identification Number (EIN) assigned by the IRS to the plan sponsor and the three-digit Plan Identification Number (PN) assigned by the plan sponsor to the plan, and, if different, also the EIN and PN last filed with the PBGC. If an EIN or PN has not been assigned, that should be indicated.

(3) The name, address and telephone number of the seller and of its duly authorized representative, if any.

(4) The name, address and telephone number of the purchaser and of its duly authorized representative, if any.

(5) A full description of each transaction for which the request is being made, including effective date.

(6) A statement explaining why the requested variance or exemption would not significantly increase the risk of financial loss to the plan, including evidence, financial or otherwise, that supports that conclusion.

(7) When the request for a variance or exemption is filed by the seller alone, a statement signed by the purchaser indicating its intention that section 4204 of ERISA apply to the sale of assets.

(8) A statement indicating the amount of the purchaser's bond or escrow required under section 4204(a)(1)(B) of ERISA.

(9) The estimated amount of withdrawal liability that the seller would otherwise incur as a result of the sale if section 4204 did not apply to the sale.

(10) A certification that a complete copy of the request has been sent to each plan described in paragraph (d)(1) of this section and each collective bargaining representative of the seller's employees by certified mail, return receipt requested.

(e) *Additional information*. In addition to the information described in paragraph (d) of this section, the PBGC may require the purchaser, the seller,

or the plan to submit any other information the PBGC determines it needs to review the request.

(f) *Disclosure of information.* Any party submitting information pursuant to this section may include a statement of whether any of the information is of a nature that its disclosure may not be required under the Freedom of Information Act, 5 U.S.C. 552. The statement should specify the information that may not be subject to disclosure and the grounds therefor.

(Approved by the Office of Management and Budget under control number 1212–0021)

[61 FR 34084, July 1, 1996, as amended at 68 FR 61355, Oct. 28, 2003]

§ 4204.22 PBGC action on requests.

(a) *General.* The PBGC shall approve a request for a variance or exemption if PBGC determines that approval of the request is warranted, in that it—

(1) Would more effectively or equitably carry out the purposes of title IV of ERISA; and

(2) Would not significantly increase the risk of financial loss to the plan.

(b) *Notice of pendency of request.* As soon as practicable after receiving a variance or exemption request containing all the information specified in § 4204.21, the PBGC shall publish a notice of the pendency of the request in the FEDERAL REGISTER. The notice shall provide that any interested person may, within the period of time specified therein, submit written comments to the PBGC concerning the request. The notice will usually provide for a comment period of 45 days.

(c) *PBGC decision on request.* The PBGC shall issue a decision on a variance or exemption request as soon as practicable after the close of the comment period described in paragraph (b) of this section. PBGC's decision shall be in writing, and if the PBGC disapproves the request, the decision shall state the reasons therefor. Notice of the decision shall be published in the FEDERAL REGISTER.

PART 4206—ADJUSTMENT OF LIABILITY FOR A WITHDRAWAL SUBSEQUENT TO A PARTIAL WITHDRAWAL

Sec.

4206.1 Purpose and scope.
4206.2 Definitions.
4206.3 Credit against liability for a subsequent withdrawal.
4206.4 Amount of credit in plans using the presumptive method.
4206.5 Amount of credit in plans using the modified presumptive method.
4206.6 Amount of credit in plans using the rolling-5 method.
4206.7 Amount of credit in plans using the direct attribution method.
4206.8 Reduction of credit for abatement or other reduction of prior partial withdrawal liability.
4206.9 Amount of credit in plans using alternative allocation methods.
4206.10 Special rule for 70-percent decline partial withdrawals.

AUTHORITY: 29 U.S.C. 1302(b)(3) and 1386(b).

SOURCE: 61 FR 34086, July 1, 1996, unless otherwise noted.

§ 4206.1 Purpose and scope.

(a) *Purpose.* The purpose of this part is to prescribe rules, pursuant to section 4206(b) of ERISA, for adjusting the partial or complete withdrawal liability of an employer that previously partially withdrew from the same multiemployer plan. Section 4206(b)(1) provides that when an employer that has partially withdrawn from a plan subsequently incurs liability for another partial or a complete withdrawal from that plan, the employer's liability for the subsequent withdrawal is to be reduced by the amount of its liability for the prior partial withdrawal (less any waiver or reduction of that prior liability). Section 4206(b)(2) requires the PBGC to prescribe regulations adjusting the amount of this credit to ensure that the liability for the subsequent withdrawal properly reflects the employer's share of liability with respect to the plan. The purpose of the credit is to protect a withdrawing employer from being charged twice for the same unfunded vested benefits of the plan. The reduction in the credit protects the other employers in the plan from becoming responsible for unfunded vested benefits properly allocable to

the withdrawing employer. In the interests of simplicity, the rules in this part provide for, generally, a one-step calculation of the adjusted credit under section 4206(b)(2) against the subsequent liability, rather than for separate calculations first of the credit under section 4206(b)(1) and then of the reduction in the credit under paragraph (b)(2) of that section. In cases where the withdrawal liability for the prior partial withdrawal was reduced by an abatement or other reduction of that liability, the adjusted credit is further reduced in accordance with § 4206.8 of this part.

(b) *Scope*. This part applies to multiemployer plans covered under title IV of ERISA, and to employers that have partially withdrawn from such plans after September 25, 1980 and subsequently completely or partially withdraw from the same plan.

§ 4206.2 Definitions.

The following are defined in § 4001.2 of this chapter: Code, employer, ERISA, multiemployer plan, PBGC, plan, and plan year.

In addition, for purposes of this part:

Complete withdrawal means a complete withdrawal as described in section 4203 of ERISA.

Partial withdrawal means a partial withdrawal as described in section 4205 of ERISA.

§ 4206.3 Credit against liability for a subsequent withdrawal.

Whenever an employer that was assessed withdrawal liability for a partial withdrawal from a plan partially or completely withdraws from that plan in a subsequent plan year, it shall receive a credit against the new withdrawal liability in an amount greater than or equal to zero, determined in accordance with this part. If the credit determined under §§ 4206.4 through 4206.9 is less than zero, the amount of the credit shall equal zero.

§ 4206.4 Amount of credit in plans using the presumptive method.

(a) *General*. In a plan that uses the presumptive allocation method described in section 4211(b) of ERISA, the credit shall equal the sum of the unamortized old liabilities determined under paragraph (b) of this section, multiplied by the fractions described or determined under paragraph (c) of this section. When an employer's prior partial withdrawal liability has been reduced or waived, this credit shall be adjusted in accordance with § 4206.8.

(b) *Unamortized old liabilities*. The amounts determined under this paragraph are the employer's proportional shares, if any, of the unamortized amounts as of the end of the plan year preceding the withdrawal for which the credit is being calculated, of—

(1) The plan's unfunded vested benefits as of the end of the last plan year ending before September 26, 1980;

(2) The annual changes in the plan's unfunded vested benefits for plan years ending after September 25, 1980, and before the year of the prior partial withdrawal; and

(3) The reallocated unfunded vested benefits (if any), as determined under section 4211(b)(4) of ERISA, for plan years ending before the year of the prior partial withdrawal.

(c) *Employer's allocable share of old liabilities*. The sum of the amounts determined under paragraph (b) are multiplied by the two fractions described in this paragraph in order to determine the amount of the old liabilities that was previously assessed against the employer.

(1) The first fraction is the fraction determined under section 4206(a)(2) of ERISA for the prior partial withdrawal.

(2) The second fraction is a fraction, the numerator of which is the amount of the liability assessed against the employer for the prior partial withdrawal, and the denominator of which is the product of—

(i) The amount of unfunded vested benefits allocable to the employer as if it had completely withdrawn as of the date of the prior partial withdrawal (determined without regard to any adjustments), multiplied by—

(ii) The fraction determined under section 4206(a)(2) of ERISA for the prior partial withdrawal.

§ 4206.5 Amount of credit in plans using the modified presumptive method.

(a) *General.* In a plan that uses the modified presumptive method described in section 4211(c)(2) of ERISA, the credit shall equal the sum of the unamortized old liabilities determined under paragraph (b) of this section, multiplied by the fractions described or determined under paragraph (c) of this section. When an employer's prior partial withdrawal liability has been reduced or waived, this credit shall be adjusted in accordance with § 4206.8.

(b) *Unamortized old liabilities.* The amounts described in this paragraph shall be determined as of the end of the plan year preceding the withdrawal for which the credit is being calculated, and are the employer's proportional shares, if any, of—

(1) The plan's unfunded vested benefits as of the end of the last plan year ending before September 26, 1980, reduced as if those obligations were being fully amortized in level annual installments over 15 years beginning with the first plan year ending on or after such date; and

(2) The aggregate post-1980 change amount determined under section 4211(c)(2)(C) of ERISA as if the employer had completely withdrawn in the year of the prior partial withdrawal, reduced as if those obligations were being fully amortized in level annual installments over the 5-year period beginning with the plan year in which the prior partial withdrawal occurred.

(c) *Employer's allocable share of old liabilities.* The sum of the amounts determined under paragraph (b) are multiplied by the two fractions described in this paragraph in order to determine the amount of old liabilities that was previously assessed against the employer.

(1) The first fraction is the fraction determined under section 4206(a)(2) of ERISA for the prior partial withdrawal.

(2) The second fraction is a fraction, the numerator of which is the amount of the liability assessed against the employer for the prior partial withdrawal, and the denominator of which is the product of—

(i) The amount of unfunded vested benefits allocable to the employer as if it had completely withdrawn as of the date of the prior partial withdrawal (determined without regard to any adjustments), multiplied by—

(ii) The fraction determined under section 4206(a)(2) of ERISA for the prior partial withdrawal.

§ 4206.6 Amount of credit in plans using the rolling-5 method.

In a plan that uses the rolling-5 allocation method described in section 4211(c)(3) of ERISA, the credit shall equal the amount of the liability assessed for the prior partial withdrawal, reduced as if that amount was being fully amortized in level annual installments over the 5-year period beginning with the plan year in which the prior partial withdrawal occurred. When an employer's prior partial withdrawal liability has been reduced or waived, this credit shall be adjusted in accordance with § 4206.8.

§ 4206.7 Amount of credit in plans using the direct attribution method.

In a plan that uses the direct attribution allocation method described in section 4211(c)(4) of ERISA, the credit shall equal the amount of the liability assessed for the prior partial withdrawal, reduced as if that amount was being fully amortized in level annual installments beginning with the plan year in which the prior partial withdrawal occurred, over the greater of 10 years or the amortization period for the resulting base when the combined charge base and the combined credit base are offset under section 412(b)(4) of the Code. When an employer's prior partial withdrawal liability has been reduced or waived, this credit shall be adjusted in accordance with § 4206.8.

§ 4206.8 Reduction of credit for abatement or other reduction of prior partial withdrawal liability.

(a) *General.* If an employer's withdrawal liability for a prior partial withdrawal has been reduced or waived, the credit determined pursuant to §§ 4206.4 through 4206.7 shall be adjusted in accordance with this section.

(b) *Computation.* The adjusted credit is calculated by multiplying the credit

determined under the preceding sections of this part by a fraction—

(1) The numerator of which is the excess of the total partial withdrawal liability of the employer for all partial withdrawals in prior years (excluding those partial withdrawals for which the credit is zero) over the present value of each abatement or other reduction of that prior withdrawal liability calculated as of the date on which that prior partial withdrawal liability was determined; and

(2) The denominator of which is the total partial withdrawal liability of the employer for all partial withdrawals in prior years (excluding those partial withdrawals for which the credit is zero).

§ 4206.9 Amount of credit in plans using alternative allocation methods.

A plan that has adopted an alternative method of allocating unfunded vested benefits pursuant to section 4211(c)(5) of ERISA and part 4211 of this chapter shall adopt, by plan amendment, a method of calculating the credit provided by § 4206.3 that is consistent with the rules in §§ 4206.4 through 4206.8 for plans using the statutory allocation method most similar to the plan's alternative allocation method.

§ 4206.10 Special rule for 70-percent decline partial withdrawals.

For the purposes of applying the rules in §§ 4206.4 through 4206.9 in any case in which either the prior or subsequent partial withdrawal resulted from a 70-percent contribution decline (or a 35-percent decline in the case of certain retail food industry plans), the first year of the 3-year testing period shall be deemed to be the plan year in which the partial withdrawal occurred.

PART 4207—REDUCTION OR WAIVER OF COMPLETE WITHDRAWAL LIABILITY

Sec.

4207.1 Purpose and scope.
4207.2 Definitions.
4207.3 Abatement.
4207.4 Withdrawal liability payments during pendency of abatement determination.
4207.5 Requirements for abatement.
4207.6 Partial withdrawals after reentry.
4207.7 Liability for subsequent complete withdrawals and related adjustments for allocating unfunded vested benefits.
4207.8 Liability for subsequent partial withdrawals.
4207.9 Special rules.
4207.10 Plan rules for abatement.
4207.11 Method of filing; method and date of issuance.

AUTHORITY: 29 U.S.C. 1302(b)(3), 1387.

SOURCE: 61 FR 34088, July 1, 1996, unless otherwise noted.

§ 4207.1 Purpose and scope.

(a) *Purpose.* The purpose of this part is to prescribe rules, pursuant to section 4207(a) of ERISA, for reducing or waiving the withdrawal liability of certain employers that have completely withdrawn from a multiemployer plan and subsequently resume covered operations under the plan. This part prescribes rules pursuant to which the plan must waive the employer's obligation to make future liability payments with respect to its complete withdrawal and must calculate the amount of the employer's liability for a partial or complete withdrawal from the plan after its reentry into the plan. This part also provides procedures, pursuant to section 4207(b) of ERISA, for plan sponsors of multiemployer plans to apply to PBGC for approval of plan amendments that provide for the reduction or waiver of complete withdrawal liability under conditions other than those specified in section 4207(a) of ERISA and this part.

(b) *Scope.* This part applies to multiemployer plans covered under title IV of ERISA, and to employers that have completely withdrawn from such plans after September 25, 1980, and that have not, as of the date of their reentry into the plan, fully satisfied their obligation to pay withdrawal liability arising from the complete withdrawal.

§ 4207.2 Definitions.

The following terms are defined in § 4001.2 of this chapter: employer, ERISA, IRS, Multiemployer Act, multiemployer plan, nonforfeitable benefit, PBGC, plan, and plan year.

In addition, for purposes of this part:

Complete withdrawal means a complete withdrawal as described in section 4203 of ERISA.

Eligible employer means the employer, as defined in section 4001(b) of ERISA, as it existed on the date of its initial partial or complete withdrawal, as applicable. An eligible employer shall continue to be an eligible employer notwithstanding the occurrence of any of the following events:

(1) A restoration involving a mere change in identity, form or place of organization, however effected;

(2) A reorganization involving a liquidation into a parent corporation;

(3) A merger, consolidation or division solely between (or among) trades or businesses (whether or not incorporated) of the employer; or

(4) An acquisition by or of, or a merger or combination with another trade or business.

Partial withdrawal means a partial withdrawal as described in section 4205 of ERISA.

Period of withdrawal means the plan year in which the employer completely withdrew from the plan, the plan year in which the employer reentered the plan and all intervening plan years.

§ 4207.3 Abatement.

(a) *General.* Whenever an eligible employer that has completely withdrawn from a multiemployer plan reenters the plan, it may apply to the plan for abatement of its complete withdrawal liability. Applications shall be filed by the date of the first scheduled withdrawal liability payment falling due after the employer resumes covered operations or, if later, the fifteenth calendar day after the employer resumes covered operations. Applications shall identify the eligible employer, the withdrawn employer, if different, the date of withdrawal, and the date of resumption of covered operations. Upon receiving an application for abatement, the plan sponsor shall determine, in accordance with paragraph (b) of this section, whether the employer satisfies the requirements for abatement of its complete withdrawal liability under § 4207.5, § 4207.9, or a plan amendment which has been approved by PBGC pursuant to § 4207.10. If the plan sponsor determines that the employer satisfies the requirements for abatement of its complete withdrawal liability, the provisions of paragraph (c) of this section shall apply. If the plan sponsor determines that the employer does not satisfy the requirements for abatement of its complete withdrawal liability, the provisions of paragraphs (d) and (e) of this section shall apply.

(b) *Determination of abatement.* As soon as practicable after an eligible employer that completely withdrew from a multiemployer plan applies for abatement, the plan sponsor shall determine whether the employer satisfies the requirements for abatement of its complete withdrawal liability under this part and shall notify the employer in writing of its determination and of the consequences of its determination, as described in paragraphs (c) or (d) and (e) of this section, as appropriate. If a bond or escrow has been provided to the plan under § 4207.4, the plan sponsor shall send a copy of the notice to the bonding or escrow agent.

(c) *Effects of abatement.* If the plan sponsor determines that the employer satisfies the requirements for abatement of its complete withdrawal liability under this part, then—

(1) The employer shall have no obligation to make future withdrawal liability payments to the plan with respect to its complete withdrawal;

(2) The employer's liability for a subsequent withdrawal shall be determined in accordance with § 4207.7 or § 4207.8, as applicable;

(3) Any bonds furnished under § 4207.4 shall be cancelled and any amounts held in escrow under § 4207.4 shall be refunded to the employer; and

(4) Any withdrawal liability payments due after the reentry and made by the employer to the plan shall be refunded by the plan without interest.

(d) *Effects of non-abatement.* If the plan sponsor determines that the employer does not satisfy the requirements for abatement of its complete withdrawal liability under this part, then—

(1) The bond or escrow furnished under § 4207.4 shall be paid to the plan within 30 days after the date of the plan sponsor's notice under paragraph (b) of this section;

(2) The employer shall pay to the plan within 30 days after the date of the plan sponsor's notice under paragraph (b) of this section, the amount of

its withdrawal liability payment or payments, with respect to which the bond or escrow was furnished, in excess of the bond or escrow;

(3) The employer shall resume making its withdrawal liability payments as they are due to the plan; and

(4) The employer shall be treated as a new employer for purposes of any future application of the withdrawal liability rules in sections 4201–4225 of title IV of ERISA with respect to its participation in the plan after its reentry into the plan, except that in plans using the ''direct attribution'' method (section 4211(c)(4) of ERISA), the nonforfeitable benefits attributable to service with the employer shall include nonforfeitable benefits attributable to service prior to reentry that were not nonforfeitable at that time.

(e) *Collection of payments due and review of non-abatement determination.* The rules in part 4219, subpart C, of this chapter (relating to overdue, defaulted, and overpaid withdrawal liability) shall apply with respect to all payments required to be made under paragraphs (d)(2) and (d)(3) of this section. For this purpose, a payment required to be made under paragraph (d)(2) shall be treated as a withdrawal liability payment due on the 30th day after the date of the plan sponsor's notice under paragraph (b) of this section.

(1) *Review of non-abatement determination.* A plan sponsor's determination that the employer does not satisfy the requirements for abatement under this part shall be subject to plan review under section 4219(b)(2) of ERISA and to arbitration under section 4221 of ERISA, within the times prescribed by those sections. For this purpose, the plan sponsor's notice under paragraph (b) of this section shall be treated as a demand under section 4219(b)(1) of ERISA.

(2) *Determination of abatement.* If the plan sponsor or an arbitrator determines that the employer satisfies the requirements for abatement of its complete withdrawal liability under this part, the plan sponsor shall immediately refund the following payments (plus interest, except as indicated below, determined in accordance with § 4219.31(d) of this chapter as if the payments were overpayments of withdrawal liability) to the employer in a lump sum:

(i) The amount of the employer's withdrawal liability payment or payments, without interest, due after its reentry and made by the employer.

(ii) The bond or escrow paid to the plan under paragraph (d)(1) of this section.

(iii) The amount of the employer's withdrawal liability payment or payments in excess of the bond or escrow, paid to the plan under paragraph (d)(2) of this section.

(iv) Any withdrawal liability payment made by the employer to the plan pursuant to paragraph (d)(3) of this section after the plan sponsor's notice under paragraph (b) of this section.

§ 4207.4 Withdrawal liability payments during pendency of abatement determination.

(a) *General rule.* An eligible employer that completely withdraws from a multiemployer plan and subsequently reenters the plan may, in lieu of making withdrawal liability payments due after its reentry, provide a bond to, or establish an escrow account for, the plan that satisfies the requirements of paragraph (b) of this section or any plan rules adopted under paragraph (d) of this section, pending a determination by the plan sponsor under § 4207.3(b) of whether the employer satisfies the requirements for abatement of its complete withdrawal liability. An employer that applies for abatement and neither provides a bond/escrow nor pays its withdrawal liability payments remains eligible for abatement.

(b) *Bond/escrow.* The bond or escrow allowed by this section shall be in an amount equal to 70 percent of the withdrawal liability payments that would otherwise be due. The bond or escrow relating to each payment shall be furnished before the due date of that payment. A single bond or escrow may be provided for more than one payment due during the pendency of the plan sponsor's determination. The bond or escrow agreement shall provide that if the plan sponsor determines that the employer does not satisfy the requirements for abatement of its complete withdrawal liability under this part,

the bond or escrow shall be paid to the plan upon notice from the plan sponsor to the bonding or escrow agent. A bond provided under this paragraph shall be issued by a corporate surety company that is an acceptable surety for purposes of section 412 of ERISA.

(c) *Notice of bond/escrow.* Concurrently with posting a bond or establishing an escrow account under paragraph (b) of this section, the employer shall notify the plan sponsor. The notice shall include a statement of the amount of the bond or escrow, the scheduled payment or payments with respect to which the bond or escrow is being furnished, and the name and address of the bonding or escrow agent.

(d) *Plan amendments concerning bond/escrow.* A plan may, by amendment, adopt rules decreasing the amount specified in paragraph (b) of a bond or escrow allowed under this section. A plan amendment adopted under this paragraph may be applied only to the extent that it is consistent with the purposes of ERISA.

§ 4207.5 Requirements for abatement.

(a) *General rule.* Except as provided in § 4207.9 (d) and (e) (pertaining to acquisitions, mergers and other combinations), an eligible employer that completely withdraws from a multiemployer plan and subsequently reenters the plan shall have its liability for that withdrawal abated in accordance with § 4207.3(c) if the employer resumes covered operations under the plan, and the number of contribution base units with respect to which the employer has an obligation to contribute under the plan for the measurement period (as defined in paragraph (b) of this section) after it resumes covered operations exceeds 30 percent of the number of contribution base units with respect to which the employer had an obligation to contribute under the plan for the base year (as defined in paragraph (c) of this section).

(b) *Measurement period.* If the employer resumes covered operations under the plan at least six full months prior to the end of a plan year and would satisfy the test in paragraph (a) based on its contribution base units for that plan year, then the measurement period shall be the period from the date it resumes covered operations until the end of that plan year. If the employer would not satisfy this test, or if the employer resumes covered operations under the plan less than six full months prior to the end of the plan year, the measurement period shall be the first twelve months after it resumes covered operations.

(c) *Base year.* For purposes of paragraph (a) of this section, the employer's number of contribution base units for the base year is the average number of contribution base units for the two plan years in which its contribution base units were the highest, within the five plan years immediately preceding the year of its complete withdrawal.

§ 4207.6 Partial withdrawals after reentry.

(a) *General rule.* For purposes of determining whether there is a partial withdrawal of an eligible employer whose liability is abated under this part upon the employer's reentry into the plan or at any time thereafter, the plan sponsor shall apply the rules in section 4205 of ERISA, as modified by the rules in this section, and section 108 of the Multiemployer Act. A partial withdrawal of an employer whose liability is abated under this part may occur under these rules upon the employer's reentry into the plan. However, a plan sponsor may not demand payment of withdrawal liability for a partial withdrawal occurring upon the employer's reentry before the plan sponsor has determined that the employer's liability for its complete withdrawal is abated under this part and has so notified the employer in accordance with § 4207.3(b).

(b) *Partial withdrawal—70-percent contribution decline.* The plan sponsor shall determine whether there is a partial withdrawal described in section 4205(a)(1) of ERISA (relating to a 70-percent contribution decline) in accordance with the rules in section 4205 of ERISA and section 108 of the Multiemployer Act, as modified by the rules in this paragraph, and shall determine the amount of an employer's liability for that partial withdrawal in accordance with the rules in § 4207.8(b).

(1) *Definition of ''3-year testing period.''* For purposes of section 4205(b)(1)

of ERISA, the term ''3-year testing period'' means the period consisting of the plan year for which the determination is made and the two immediately preceding plan years, excluding any plan year during the period of withdrawal.

(2) *Contribution base units for high base year.* For purposes of section 4205(b)(1) of ERISA and except as provided in section 108(d)(3) of the Multiemployer Act, in determining the number of contribution base units for the high base year, if the five plan years immediately preceding the beginning of the 3-year testing period include a plan year during the period of withdrawal, the number of contribution base units for each such year of withdrawal shall be deemed to be the greater of—

(i) The employer's contribution base units for that plan year; or

(ii) The average of the employer's contribution base units for the three plan years preceding the plan year in which the employer completely withdrew from the plan.

(c) *Partial withdrawal—partial cessation of contribution obligation.* The plan sponsor shall determine whether there is a partial withdrawal described in section 4205(a)(2) of ERISA (relating to a partial cessation of the employer's contribution obligation) in accordance with the rules in section 4205 of ERISA, as modified by the rules in this paragraph, and section 108 of the Multiemployer Act. In making this determination, the sponsor shall exclude all plan years during the period of withdrawal. A partial withdrawal under this paragraph can occur no earlier than the plan year of reentry. If the sponsor determines that there was a partial withdrawal, it shall determine the amount of an employer's liability for that partial withdrawal in accordance with the rules in § 4207.8(c).

§ 4207.7 Liability for subsequent complete withdrawals and related adjustments for allocating unfunded vested benefits.

(a) *General.* When an eligible employer that has had its liability for a complete withdrawal abated under this part completely withdraws from the plan, the employer's liability for that subsequent withdrawal shall be determined in accordance with the rules in sections 4201–4225 of title IV, as modified by the rules in this section, and section 108 of the Multiemployer Act. In the case of a combination described in § 4207.9(d), the modifications described in this section shall be applied only with respect to that portion of the eligible employer that had previously withdrawn from the plan. In the case of a combination described in § 4207.9(e), the modifications shall be applied separately with respect to each previously withdrawn employer that comprises the eligible employer. In addition, when a plan has abated the liability of a reentered employer, if the plan uses either the ''presumptive'' or the ''direct attribution'' method (section 4211(b) or (c)(4), respectively) for allocating unfunded vested benefits, the plan shall modify those allocation methods as described in this section in allocating unfunded vested benefits to any employer that withdraws from the plan after the reentry.

(b) *Allocation of unfunded vested benefits for subsequent withdrawal in plans using ''presumptive'' method.* In a plan using the ''presumptive'' allocation method under section 4211(b) of ERISA, the amount of unfunded vested benefits allocable to a reentered employer for a subsequent withdrawal shall equal the sum of—

(1) The unamortized amount of the employer's allocable shares of the amounts described in section 4211(b)(1), for the plan years preceding the initial withdrawal, determined as if the employer had not previously withdrawn;

(2) The sum of the unamortized annual credits attributable to the year of the initial withdrawal and each succeeding year ending prior to reentry; and

(3) The unamortized amount of the employer's allocable shares of the amounts described in section 4211(b)(1)(A) and (C) for plan years ending after its reentry. For purposes of paragraph (b)(2), the annual credit for a plan year is the amount by which the employer's withdrawal liability payments for the year exceed the greater of the employer's imputed contributions or actual contributions for the

year. The employer's imputed contributions for a year shall equal the average annual required contributions of the employer for the three plan years preceding the initial withdrawal. The amount of the credit for a plan year is reduced by 5 percent of the original amount for each succeeding plan year ending prior to the year of the subsequent withdrawal.

(c) *Allocation of unfunded vested benefits for subsequent withdrawal in plans using ''modified presumptive'' or ''rolling-5'' method.* In a plan using either the ''modified presumptive'' allocation method under section 4211(c)(2) of ERISA or the ''rolling-5'' method under section 4211(c)(3), the amount of unfunded vested benefits allocable to a reentered employer for a subsequent withdrawal shall equal the sum of—

(1) The amount determined under section 4211 (c)(2) or (c)(3) of ERISA, as appropriate, as if the date of reentry were the employer's initial date of participation in the plan; and

(2) The outstanding balance, as of the date of reentry, of the unfunded vested benefits allocated to the employer for its previous withdrawal (as defined in paragraph (c)(2)(i) of this section) reduced as if that amount were being fully amortized in level annual installments, at the plan's funding rate as of the date of reentry, over the period described in paragraph (c)(2)(ii), beginning with the first plan year after reentry.

(i) The outstanding balance of the unfunded vested benefits allocated to an employer for its previous withdrawal is the excess of the amount determined under section 4211 (c)(2) or (c)(3) of ERISA as of the end of the plan year in which the employer initially withdrew, accumulated with interest at the plan's funding rate for that year, from that year to the date of reentry, over the withdrawal liability payments made by the employer, accumulated with interest from the date of payment to the date of reentry at the plan's funding rate for the year of entry.

(ii) The period referred to in paragraph (c)(2) for plans using the modified presumptive method is the greater of five years, or the number of full plan years remaining on the amortization schedule under section 4211(c)(2)(B)(i) of ERISA. For plans using the rolling-5 method, the period is five years.

(d) *Adjustments applicable to all employers in plans using ''presumptive'' method.* In a plan using the ''presumptive'' allocation method under section 4211(b) of ERISA, when the plan has abated the withdrawal liability of a reentered employer pursuant to this part, the following adjustments to the allocation method shall be made in computing the unfunded vested benefits allocable to any employer that withdraws from the plan in a plan year beginning after the reentry:

(1) The sum of the unamortized amounts of the annual credits of a reentered employer shall be treated as a reallocated amount under section 4211(b)(4) of ERISA in the plan year in which the employer reenters.

(2) In the event that the 5-year period used to compute the denominator of the fraction described in section 4211 (b)(2)(E) and (b)(4)(D) of ERISA includes a year during the period of withdrawal of a reentered employer, the contributions for a year during the period of withdrawal shall be adjusted to include any actual or imputed contributions of the employer, as determined under paragraph (b) of this section.

(e) *Adjustments applicable to all employers in plans using ''direct attribution'' method.* In a plan using the ''direct attribution'' method under section 4211(c)(4) of ERISA, when the plan has abated the withdrawal liability of a reentered employer pursuant to this part, the following adjustments to the allocation method shall be made in computing the unfunded vested benefits allocable to any employer that withdraws from the plan in a plan year beginning after the reentry:

(1) The nonforfeitable benefits attributable to service with a reentered employer prior to its initial withdrawal shall be treated as benefits that are attributable to service with that employer.

(2) For purposes of section 4211(c)(4)(D)(ii) and (iii) of ERISA, withdrawal liability payments made by a reentered employer shall be treated as contributions made by the reentered employer.

(f) *Plans using alternative allocation methods under section 4211(c)(5).* A plan that has adopted an alternative method of allocating unfunded vested benefits pursuant to section 4211(c)(5) of ERISA and part 4211 of this chapter shall adopt by plan amendment a method of determining a reentered employer's allocable share of the plan's unfunded vested benefits upon its subsequent withdrawal. The method shall treat the reentered employer and other withdrawing employers in a manner consistent with the treatment under the paragraph(s) of this section applicable to plans using the statutory allocation method most similar to the plan's alternative allocation method.

(g) *Adjustments to amount of annual withdrawal liability payments for subsequent withdrawal.* For purposes of section 4219(c)(1)(C)(i)(I) and (ii)(I) of ERISA, in determining the amount of the annual withdrawal liability payments for a subsequent complete withdrawal, if the period of ten consecutive plan years ending before the plan year in which the withdrawal occurs includes a plan year during the period of withdrawal, the employer's number of contribution base units, used in section 4219(c)(1)(C)(i)(I), or the required employer contributions, used in section 4219(c)(1)(C)(ii)(I), for each such plan year during the period of withdrawal shall be deemed to be the greater of—

(1) The employer's contribution base units or the required employer contributions, as applicable, for that year; or

(2) The average of the employer's contribution base units or of the required employer contributions, as applicable, for those plan years not during the period of withdrawal, within the ten consecutive plan years ending before the plan year in which the employer's subsequent complete withdrawal occurred.

§ 4207.8 Liability for subsequent partial withdrawals.

(a) *General.* When an eligible employer that has had its liability for a complete withdrawal abated under this part partially withdraws from the plan, the employer's liability for that subsequent partial withdrawal shall be determined in accordance with the rules in sections 4201–4225 of ERISA, as modified by the rules in § 4207.7 (b) through (g) of this part and the rules in this section, and section 108 of the Multiemployer Act.

(b) *Liability for a 70-percent contribution decline.* The amount of an employer's liability under section 4206(a) (relating to the calculation of liability for a partial withdrawal), section 4208 (relating to the reduction of liability for a partial withdrawal) and section 4219(c)(1) (relating to the schedule of partial withdrawal liability payments) of ERISA, for a subsequent partial withdrawal described in section 4205(a)(1) of ERISA (relating to a 70-percent contribution decline) shall be modified in accordance with the rules in this paragraph.

(1) *Definition of ''3-year testing period.''* For purposes of sections 4206(a) and 4219(c)(1) of ERISA, and paragraphs (b)(2)–(b)(4) of this section, the term ''3-year testing period'' means the period consisting of the plan year for which the determination is made and the two immediately preceding plan years, excluding any plan year during the period of withdrawal.

(2) *Determination date of section 4211 allocable share.* For purposes of section 4206(a)(1)(B) of ERISA, the amount determined under section 4211 shall be determined as if the employer had withdrawn from the plan in a complete withdrawal on the last day of the first plan year in the 3-year testing period or the last day of the plan year in which the employer reentered the plan, whichever is later.

(3) *Calculation of fractional share of section 4211 amount.* For purposes of sections 4206(a)(2)(B)(ii) and 4219(c)(1)(E)(ii) of ERISA, if the five plan years immediately preceding the beginning of the 3-year testing period include a plan year during the period of withdrawal, then, in determining the denominator of the fraction described in section 4206(a)(2), the employer's contribution base units for each such year of withdrawal shall be deemed to be the greater of—

(i) The employer's contribution base units for that plan year; or

(ii) The average of the employer's contribution base units for the three plan years preceding the plan year in

which the employer completely withdrew from the plan.

(4) *Contribution base units for high base year*. If the five plan years immediately preceding the beginning of the 3-year testing period include a plan year during the period of withdrawal, then for purposes of section 4208 (a) and (b)(1) of ERISA, the number of contribution base units for the high base year shall be the number of contribution base units determined under paragraph (b)(3) of this section.

(c) *Liability for partial cessation of contribution obligation*. The amount of an employer's liability under section 4206(a) (relating to the calculation of liability for a partial withdrawal) and section 4219(c)(1) (relating to the amount of the annual partial withdrawal liability payments) of ERISA, for a subsequent partial withdrawal described in section 4205(a)(2) of ERISA (relating to a partial cessation of the contribution obligation) shall be modified in accordance with the rules in this paragraph. For purposes of sections 4206(a)(2)(B)(i) and 4219(c)(1)(E)(ii) of ERISA, if the five plan years immediately preceding the plan year in which the partial withdrawal occurs include a plan year during the period of withdrawal, the denominator of the fraction described in section 4206(a)(2) shall be determined in accordance with the rule set forth in paragraph (b)(3) of this section.

§ 4207.9 Special rules.

(a) *Employer that has withdrawn and reentered the plan before the effective date of this part*. This part shall apply, in accordance with the rules in this paragraph, with respect to an eligible employer that completely withdraws from a multiemployer plan after September 25, 1980, and is performing covered work under the plan on the effective date of this part. Upon the application of an employer described in the preceding sentence, the plan sponsor of a multiemployer plan shall determine whether the employer satisfies the requirements for abatement of its complete withdrawal liability under this part. Pending the plan sponsor's determination, the employer may provide the plan with a bond or escrow that satisfies the requirements of § 4207.4, in lieu of making its withdrawal liability payments due after its application for an abatement determination. The plan sponsor shall notify the employer in writing of its determination and the consequences of its determination as described in § 4207.3 (c) or (d) and (e), as applicable. If the plan sponsor determines that the employer qualifies for abatement, only withdrawal liability payments made prior to the employer's reentry shall be retained by the plan; payments made by the employer after its reentry shall be refunded to the employer, with interest on those made prior to the application for abatement, in accordance with § 4207.3(e)(2). If a bond or escrow has been provided to the plan in accordance with § 4207.4, the plan sponsor shall send a copy of the notice to the bonding or escrow agent. Sections 4207.6 through 4207.8 shall apply with respect to the employer's subsequent complete withdrawal occurring on or after the effective date of this part, or partial withdrawal occurring either before or after that date. This paragraph shall not negate reasonable actions taken by plans prior to the effective date of this part under plan rules implementing section 4207(a) of ERISA that were validly adopted pursuant to section 405 of the Multiemployer Act.

(b) *Employer with multiple complete withdrawals that has reentered the plan before effective date of this part*. If an employer described in paragraph (a) of this section has completely withdrawn from a multiemployer plan on two or more occasions before the effective date of this part, the rules in paragraph (a) of this section shall be applied as modified by this paragraph.

(1) The plan sponsor shall determine whether the employer satisfies the requirements for abatement under § 4207.5 based on the most recent complete withdrawal.

(2) If the employer satisfies the requirements for abatement, the employer's liability with respect to all previous complete withdrawals shall be abated.

(3) If the liability is abated, §§ 4207.6 and 4207.7 shall be applied as if the employer's earliest complete withdrawal were its initial complete withdrawal.

(c) *Employer with multiple complete withdrawals that has not reentered the plan as of the effective date of this part.* If an eligible employer has completely withdrawn from a multiemployer plan on two or more occasions between September 26, 1980, and the effective date of this part and is not performing covered work under the plan on the effective date of this regulation, the rules in this part shall apply, subject to the modifications specified in paragraphs (b)(1)–(b)(3) of this section, upon the employer's reentry into the plan.

(d) *Combination of withdrawn employer with contributing employer.* If a withdrawn employer merges or otherwise combines with an employer that has an obligation to contribute to the plan from which the first employer withdrew, the combined entity is the eligible employer, and the rules of § 4207.5 shall be applied—

(1) By subtracting from the measurement period contribution base units the contribution base units for which the non-withdrawn portion of the employer was obligated to contribute in the last plan year ending prior to the combination;

(2) By determining the base year contribution base units solely by reference to the contribution base units of the withdrawn portion of the employer; and

(3) By using the date of the combination, rather than the date of resumption of covered operations, to begin the measurement period.

(e) *Combination of two or more withdrawn employers.* If two or more withdrawn employers merge or otherwise combine, the combined entity is the eligible employer, and the rules of § 4207.5 shall be applied by combining the number of contribution base units with respect to which each portion of the employer had an obligation to contribute under the plan for its base year. However, the combined number of contribution base units shall not include contribution base units of a withdrawn portion of the employer that had fully paid its withdrawal liability as of the date of the resumption of covered operations.

§ 4207.10 Plan rules for abatement.

(a) *General rule.* Subject to the approval of the PBGC, a plan may, by amendment, adopt rules for the reduction or waiver of complete withdrawal liability under conditions other than those specified in §§ 4207.5 and 4207.9 (c) and (d), provided that such conditions relate to events occurring or factors existing subsequent to a complete withdrawal year. The request for PBGC approval shall be filed after the amendment is adopted. A plan amendment under this section may not be put into effect until it is approved by the PBGC. However, an amendment that is approved by the PBGC may apply retroactively to the date of the adoption of the amendment. PBGC approval shall also be required for any subsequent modification of the amendment, other than repeal of the amendment. Sections 4207.6, 4207.7, and 4207.8 shall apply to all subsequent partial withdrawals after a reduction or waiver of complete withdrawal liability under a plan amendment approved by the PBGC pursuant to this section.

(b) *Who may request.* The plan sponsor, or a duly authorized representative acting on behalf of the plan sponsor, shall sign and submit the request.

(c) *Where to file.* See § 4000.4 of this chapter for information on where to file.

(d) *Information.* Each request shall contain the following information:

(1) The name and address of the plan for which the plan amendment is being submitted and the telephone number of the plan sponsor or its duly authorized representative.

(2) The nine-digit Employer Identification Number (EIN) assigned to the plan sponsor by the IRS and the three-digit Plan Identification Number (PN) assigned to the plan by the plan sponsor, and, if different, the EIN and PN last filed with the PBGC. If no EIN or PN has been assigned, that should be indicated.

(3) A copy of the executed amendment, including—

(i) The date on which the amendment was adopted;

(ii) The proposed effective date; and

(iii) The full text of the rules on the reduction or waiver of complete withdrawal liability.

(4) A copy of the most recent actuarial valuation report of the plan.

(5) A statement certifying that notice of the adoption of the amendment and of the request for approval filed under this section has been given to all employers that have an obligation to contribute under the plan and to all employee organizations representing employees covered under the plan.

(e) *Supplemental information.* In addition to the information described in paragraph (d) of this section, a plan may submit any other information that it believes it pertinent to its request. The PBGC may require the plan sponsor to submit any other information that the PBGC determines it needs to review a request under this section.

(f) *Criteria for PBGC approval.* The PBGC shall approve a plan amendment authorized by paragraph (a) of this section if it determines that the rules therein are consistent with the purposes of ERISA. An abatement rule is not consistent with the purposes of ERISA if—

(1) Implementation of the rule would be adverse to the interest of plan participants and beneficiaries; or

(2) The rule would increase the PBGC's risk of loss with respect to the plan.

(Approved by the Office of Management and Budget under control number 1212–0044)

[61 FR 34088, July 1, 1996, as amended at 68 FR 61355, Oct. 28, 2003]

§ 4207.11 Method of filing; method and date of issuance.

(a) *Method of filing.* The PBGC applies the rules in subpart A of part 4000 of this chapter to determine permissible methods of filing with the PBGC under this part.

(b) *Method of issuance.* The PBGC applies the rules in subpart B of part 4000 of this chapter to determine permissible methods of issuance under this part.

(c) *Date of issuance.* The PBGC applies the rules in subpart C of part 4000 of this chapter to determine the date that an issuance under this part was provided.

[68 FR 61355, Oct. 28, 2003]

PART 4208—REDUCTION OR WAIVER OF PARTIAL WITHDRAWAL LIABILITY

Sec.

4208.1 Purpose and scope.
4208.2 Definitions.
4208.3 Abatement.
4208.4 Conditions for abatement.
4208.5 Withdrawal liability payments during pendency of abatement determination.
4208.6 Computation of reduced annual partial withdrawal liability payment.
4208.7 Adjustment of withdrawal liability for subsequent withdrawals.
4208.8 Multiple partial withdrawals in one plan year.
4208.9 Plan adoption of additional abatement conditions.
4208.10 Method of filing; method and date of issuance.

AUTHORITY: 29 U.S.C. 1302(b)(3), 1388(c) and (e).

SOURCE: 61 FR 34093, July 1, 1996, unless otherwise noted.

§ 4208.1 Purpose and scope.

(a) *Purpose.* The purpose of this part is to establish rules for reducing or waiving the liability of certain employers that have partially withdrawn from a multiemployer pension plan.

(b) *Scope.* This part applies to multiemployer pension plans covered under title IV of ERISA and to employers that have partially withdrawn from such plans after September 25, 1980, and that have not, as of the date on which they satisfy the conditions for reducing or eliminating their partial withdrawal liability, fully satisfied their obligation to pay that partial withdrawal liability. This rule shall not negate reasonable actions taken by plans prior to the effective date of this part under plan rules implementing section 4208 of ERISA that were validly adopted pursuant to section 405 of the Multiemployer Act.

§ 4208.2 Definitions.

The following terms are defined in § 4001.2 of this chapter: employer, ERISA, IRS, Multiemployer Act, multiemployer plan, PBGC, plan, and plan year.

In addition, for purposes of this part:

Complete withdrawal means a complete withdrawal as described in section 4203 of ERISA.

Eligible employer means the employer, as defined in section 4001(b) of ERISA, as it existed on the date of its initial partial or complete withdrawal, as applicable. An eligible employer shall continue to be an eligible employer notwithstanding the occurrence of any of the following events:

(1) A restoration involving a mere change in identity, form or place of organization, however effected;

(2) A reorganization involving a liquidation into a parent corporation;

(3) A merger, consolidation or division solely between (or among) trades or businesses (whether or not incorporated) of the employer; or

(4) An acquisition by or of, or a merger or combination with another trade or business.

Partial withdrawal means a partial withdrawal as described in section 4205 of ERISA.

Partial withdrawal year means the third year of the 3-year testing period in the case of a partial withdrawal caused by a 70-percent contribution decline, or the year of the partial cessation in the case of a partial withdrawal caused by a partial cessation of the employer's contribution obligation.

§ 4208.3 Abatement.

(a) *General.* Whenever an eligible employer that has partially withdrawn from a multiemployer plan satisfies the requirements in § 4208.4 for the reduction or waiver of its partial withdrawal liability, it may apply to the plan for abatement of its partial withdrawal liability. Applications shall identify the eligible employer, the withdrawn employer (if different), the date of withdrawal, and the basis for reduction or waiver of its withdrawal liability. Upon receiving a complete application for abatement, the plan sponsor shall determine, in accordance with paragraph (b) of this section, whether the employer satisfies the requirements for abatement of its partial withdrawal liability under § 4208.4. If the plan sponsor determines that the employer satisfies the requirements for abatement of its partial withdrawal liability, the provisions of paragraph (c) of this section shall apply. If the plan sponsor determines that the employer does not satisfy the requirements for abatement of its partial withdrawal liability, the provisions of paragraphs (d) and (e) of this section shall apply.

(b) *Determination of abatement.* Within 60 days after an eligible employer that partially withdrew from a multiemployer plan applies for abatement in accordance with paragraph (a) of this section, the plan sponsor shall determine whether the employer satisfies the requirements for abatement of its partial withdrawal liability under § 4208.4 and shall notify the employer in writing of its determination and of the consequences of its determination, as described in paragraphs (c) or (d) and (e) of this section, as appropriate. If a bond or escrow has been provided to the plan under § 4208.5 of this part, the plan sponsor shall send a copy of the notice to the bonding or escrow agent.

(c) *Effects of abatement.* If the plan sponsor determines that the employer satisfies the requirements for abatement of its partial withdrawal liability under § 4208.4, then—

(1) The employer's partial withdrawal liability shall be eliminated or its annual partial withdrawal liability payments shall be reduced in accordance with § 4208.6, as applicable;

(2) The employer's liability for a subsequent withdrawal shall be determined in accordance with § 4208.7;

(3) Any bonds furnished under § 4208.5 shall be canceled and any amounts held in escrow under § 4208.5 shall be refunded to the employer; and

(4) Any withdrawal liability payments originally due and paid after the end of the plan year in which the conditions for abatement were satisfied, in excess of the amount due under this part after that date shall be credited to the remaining withdrawal liability payments, if any, owed by the employer, beginning with the first payment due after the revised payment schedule is issued pursuant to this paragraph. If the credited amount is greater than the outstanding amount of the employer's partial withdrawal liability, the amount remaining after satisfaction of the liability shall be refunded to the employer. Interest on the credited amount at the rate prescribed in part 4219, subpart C, of this chapter (relating to overdue, defaulted, and overpaid withdrawal liability) shall be

added if the plan sponsor does not issue a revised payment schedule reflecting the credit or make the required refund within 60 days after receipt by the plan sponsor of a complete abatement application. Interest shall accrue from the 61st day.

(d) *Effects of non-abatement.* If the plan sponsor determines that the employer does not satisfy the requirements for abatement of its partial withdrawal liability under § 4208.4, then the employer shall take or cause to be taken the actions set forth in paragraphs (d)(1)–(d)(3) of this section. The rules in part 4219, subpart C, shall apply with respect to all payments required to be made under paragraphs (d)(2) and (d)(3). For this purpose, a payment required under paragraph (d)(2) shall be treated as a withdrawal liability payment due on the 30th day after the date of the plan sponsor's notice under paragraph (b) of this section.

(1) Any bond or escrow furnished under § 4208.5 shall be paid to the plan within 30 days after the date of the plan sponsor's notice under paragraph (b) of this section.

(2) The employer shall pay to the plan within 30 days after the date of the plan sponsor's notice under paragraph (b) of this section, the amount of its withdrawal liability payment or payments, with respect to which the bond or escrow was furnished, in excess of the bond or escrow.

(3) The employer shall resume or continue making its partial withdrawal liability payments as they are due to the plan.

(e) *Review of non-abatement determination.* A plan sponsor's determinations that the employer does not satisfy the requirements for abatement under § 4208.4 and of the amount of reduction determined under § 4208.6 shall be subject to plan review under section 4219(b)(2) of ERISA and to arbitration under section 4221 of ERISA and part 4221 of this chapter, within the times prescribed by those provisions. For this purpose, the plan sponsor's notice under paragraph (b) of this section shall be treated as a demand under section 4219(b)(1) of ERISA. If the plan sponsor upon review or an arbitrator determines that the employer satisfies the requirements for abatement of its partial withdrawal liability under § 4208.4, the plan sponsor shall immediately refund the amounts described in paragraph (e)(1) of this section if the liability is waived, or credit and refund the amounts described in paragraph (e)(2) if the annual payment is reduced.

(1) *Refund for waived liability.* If the employer's partial withdrawal liability is waived, the plan sponsor shall refund to the employer the payments made pursuant to paragraphs (d)(1)–(d)(3) of this section (plus interest determined in accordance with § 4219.31(d) of this chapter as if the payments were overpayments of withdrawal liability).

(2) *Credit for reduced annual payment.* If the employer's annual partial withdrawal liability payment is reduced, the plan sponsor shall credit the payments made pursuant to paragraphs (d)(1)–(d)(3) of this section (plus interest determined in accordance with § 4219.31(d) of this chapter as if the payments were overpayments of withdrawal liability) to future withdrawal liability payments owed by the employer, beginning with the first payment that is due after the determination, and refund any credit (including interest) remaining after satisfaction of the outstanding amount of the employer's partial withdrawal liability.

§ 4208.4 Conditions for abatement.

(a) *Waiver of liability for a 70-percent contribution decline.* An employer that has incurred a partial withdrawal under section 4205(a)(1) of ERISA shall have no obligation to make payments with respect to that partial withdrawal (other than delinquent payments) for plan years beginning after the second consecutive plan year in which the conditions of either paragraph (a)(1) or (a)(2) are satisfied for each of the two years:

(1) The number of contribution base units with respect to which the employer has an obligation to contribute under the plan for each year is not less than 90 percent of the total number of contribution base units with respect to which the employer had an obligation to contribute to the plan for the high base year (as defined in paragraph (d) of this section).

(2) The conditions of this paragraph are satisfied if—

(i) The number of contribution base units with respect to which the employer has an obligation to contribute for each year exceeds 30 percent of the total number of contribution base units with respect to which the employer had an obligation to contribute to the plan for the high base year (as defined in paragraph (d) of this section); and

(ii) The total number of contribution base units with respect to which all employers under the plan have obligations to contribute in each of the two years is not less than 90 percent of the total number of contribution base units for which all employers had obligations to contribute in the partial withdrawal year.

(b) *Waiver of liability for a partial cessation of the employer's contribution obligation.* Except as provided in § 4208.8, an employer that has incurred partial withdrawal liability under section 4205(a)(2) of ERISA shall have no obligation to make payments with respect to that partial withdrawal (other than delinquent payments) for plan years beginning after the second consecutive plan year in which the employer satisfies the conditions under either paragraph (b)(1) or (b)(2) of this section.

(1) *Partial restoration of withdrawn work.* The employer satisfies the conditions under this paragraph if, for each of two consecutive plan years—

(i) The employer makes contributions for the same facility or under the same collective bargaining agreement that gave rise to the partial withdrawal;

(ii) The employer's contribution base units for that facility or under that agreement exceed 30 percent of the contribution base units with respect to which the employer had an obligation to contribute for that facility or under that agreement for the high base year (as defined in paragraph (d) of this section); and

(iii) The total number of contribution base units with respect to which the employer has an obligation to contribute to the plan equals at least 90 percent of the total number of contribution base units with respect to which the employer had an obligation to contribute under the plan for the high base year (as defined in paragraph (d) of this section).

(2) *Substantial restoration of withdrawn work.* The employer satisfies the conditions under this paragraph if, for each of two consecutive plan years—

(i) The employer makes contributions for the same facility or under the same collective bargaining agreement that gave rise to the partial withdrawal;

(ii) The employer's contribution base units for that facility or under that agreement are not less than 90 percent of the contribution base units with respect to which the employer had an obligation to contribute for that facility or under that agreement for the high base year (as defined in paragraph (d) of this section); and

(iii) The total number of contribution base units with respect to which the employer has an obligation to contribute to the plan equals or exceeds the sum of—

(A) The number of contribution base units with respect to which the employer had an obligation to contribute in the year prior to the partial withdrawal year, determined without regard to the contribution base units for the facility or under the agreement that gave rise to the partial withdrawal; and

(B) 90 percent of the contribution base units with respect to which the employer had an obligation to contribute for that facility or under that agreement in either the year prior to the partial withdrawal year or the high base year (as defined in paragraph (d) of this section), whichever is less.

(c) *Reduction in annual partial withdrawal liability payment*—(1) *Partial withdrawals under section 4205(a)(1).* An employer shall be entitled to a reduction of its annual partial withdrawal liability payment for a plan year if the number of contribution base units with respect to which the employer had an obligation to contribute during the plan year exceeds the greater of—

(i) 110 percent (or such lower number as the plan may, by amendment, adopt) of the number of contribution base units with respect to which the employer had an obligation to contribute in the partial withdrawal year; or

(ii) The total number of contribution base units with respect to which the employer had an obligation to contribute to the plan for the plan year following the partial withdrawal year.

(2) *Partial withdrawals under section 4205(a)(2).* An employer that resumes the obligation to contribute with respect to a facility or collective bargaining agreement that gave rise to a partial withdrawal, but does not qualify to have that liability waived under paragraph (b) of this section, shall have its annual partial withdrawal liability payment reduced for any plan year in which the total number of contribution base units with respect to which the employer has an obligation to contribute equals or exceeds the sum of—

(i) The number of contribution base units for the reentered facility or agreement during that year; and

(ii) The total number of contribution base units with respect to which the employer had an obligation to contribute to the plan for the year following the partial withdrawal year.

(d) *High base year.* For purposes of paragraphs (a) and (b)(1)(iii) of this section, the high base year contributions are the average of the total contribution base units for the two plan years for which the employer's total contribution base units were highest within the five plan years immediately preceding the beginning of the 3-year testing period defined in section 4205(b)(1)(B)(i) of ERISA, with respect to paragraph (a) of this section, or the partial withdrawal year, with respect to paragraph (b)(1)(iii) of this section. For purposes of paragraphs (b)(1)(ii) and (b)(2) of this section, the high base year contributions are the average number of contribution base units for the facility or under the agreement for the two plan years for which the employer's contribution base units for that facility or under that agreement were highest within the five plan years immediately preceding the partial withdrawal.

§ 4208.5 Withdrawal liability payments during pendency of abatement determination.

(a) *Bond/Escrow.* An employer that has satisfied the requirements of § 4208.4(a)(1) without regard to ''90 percent of'' or § 4208.4(b) for one year with respect to all partial withdrawals it incurred in a plan year may, in lieu of making scheduled withdrawal liability payments in the second year for those withdrawals, provide a bond to, or establish an escrow account for, the plan that satisfies the requirements of paragraph (b) of this section or any plan rules adopted under paragraph (d) of this section, pending a determination by the plan sponsor of whether the employer satisfies the requirements of § 4208.4 (a)(1) or (b) for the second consecutive plan year. An employer that applies for abatement and neither provides a bond/escrow nor makes its withdrawal liability payments remains eligible for abatement.

(b) *Amount of bond/escrow.* The bond or escrow allowed by this section shall be in an amount equal to 50 percent of the withdrawal liability payments that would otherwise be due. The bond or escrow relating to each payment shall be furnished before the due date of that payment. A single bond or escrow may be provided for more than one payment due during the pendency of the plan sponsor's determination. The bond or escrow agreement shall provide that if the plan sponsor determines that the employer does not satisfy the requirements for abatement of its partial withdrawal liability under § 4208.4 (a)(1) or (b), the bond or escrow shall be paid to the plan upon notice from the plan sponsor to the bonding or escrow agent. A bond provided under this paragraph shall be issued by a corporate surety company that is an acceptable surety for purposes of section 412 of ERISA.

(c) *Notice of bond/escrow.* Concurrently with posting a bond or establishing an escrow account under this section, the employer shall notify the plan sponsor. The notice shall include a statement of the amount of the bond or escrow, the scheduled payment or payments with respect to which the bond or escrow is being furnished, and the name and address of the bonding or escrow agent.

(d) *Plan amendments concerning bond/escrow.* A plan may, by amendment, adopt rules decreasing the amount of

the bond or escrow specified in paragraph (b) of this section. A plan amendment adopted under this paragraph may be applied only to the extent that it is consistent with the purposes of ERISA. An amendment satisfies this requirement only if it does not create an unreasonable risk of loss to the plan.

(e) *Plan sponsor determination.* Within 60 days after the end of the plan year in which the bond/escrow is furnished, the plan sponsor shall determine whether the employer satisfied the requirements of § 4208.4 (a)(1) or (b) for the second consecutive plan year. The plan sponsor shall notify the employer and the bonding or escrow agent in writing of its determination and of the consequences of its determination, as described in § 4208.3 (c) or (d) and (e), as appropriate.

§ 4208.6 Computation of reduced annual partial withdrawal liability payment.

(a) *Amount of reduced payment.* An employer that satisfies the requirements of § 4208.4 (c)(1) or (c)(2) shall have its annual partial withdrawal liability payment for that plan year reduced in accordance with paragraph (a)(1) or (a)(2) of this section, respectively.

(1) The reduced annual payment amount for an employer that satisfies § 4208.4(c)(1) shall be determined by substituting the number of contribution base units in the plan year in which the requirements are satisfied for the number of contribution base units in the year following the partial withdrawal year in the numerator of the fraction described in section 4206(a)(2)(A) of ERISA.

(2) The reduced annual payment for an employer that satisfies § 4208.4(c)(2) shall be determined by adding the contribution base units for which the employer is obligated to contribute with respect to the reentered facility or agreement in the year in which the requirements are satisfied to the numerator of the fraction described in section 4206(a)(2)(A) of ERISA.

(b) *Credit for reduction.* The plan sponsor shall credit the account of an employer that satisfies the requirements of § 4208.4(c)(1) or (c)(2) with the amount of annual withdrawal liability that it paid in excess of the amount described in paragraph (a)(1) or (a)(2) of this section, as appropriate. The credit shall be applied, a revised payment schedule issued, refund made and interest added, all in accordance with § 4208.3(c)(4).

§ 4208.7 Adjustment of withdrawal liability for subsequent withdrawals.

The liability of an employer for a partial or complete withdrawal from a plan subsequent to a partial withdrawal from that plan in a prior plan year shall be reduced in accordance with part 4206 of this chapter.

§ 4208.8 Multiple partial withdrawals in one plan year.

(a) *General rule.* If an employer partially withdraws from the same multiemployer plan on two or more occasions during the same plan year, the rules of § 4208.4 shall be applied as modified by this section.

(b) *Partial withdrawals under section 4205 (a)(1) and (a)(2) in the same plan year.* If an employer partially withdraws from the same multiemployer plan as a result of a 70-percent contribution decline and a partial cessation of the employer's contribution obligation in the same plan year, the employer shall not be eligible for abatement under § 4208.4 (b) or (c)(2) or under paragraph (c) of this section. The employer may qualify for abatement under § 4208.4(a) and (c)(1) and under any rules adopted by the plan pursuant to § 4208.9.

(c) *Multiple partial cessations of the employer's contribution obligation.* If an employer permanently ceases to have an obligation to contribute for more than one facility, under more than one collective bargaining agreement, or for one or more facilities and under one or more collective bargaining agreements, resulting in multiple partial withdrawals under section 4205(b)(2)(A) in the same plan year, the abatement rules in § 4208.4(b) shall be applied as modified by this paragraph. If an employer resumes work at all such facilities and under all such collective bargaining agreements, the determination of whether the employer qualifies for elimination of its liability under

§ 4208.4(b) shall be made by substituting the test set forth in paragraph (c)(1) of this section for that prescribed by § 4208.4 (b)(1)(ii) or (b)(2)(ii), as applicable. If the employer resumes work at or under fewer than all the facilities or collective bargaining agreements described in this paragraph, the employer cannot qualify for elimination of its liability under § 4208.4(b). However, the employer may qualify for a reduction in its partial withdrawal liability pursuant to paragraph (c)(2) of this section.

(1) *Resumption of work at all facilities and under all bargaining agreements*. The test under this paragraph is satisfied if for each of the two consecutive plan years referred to in § 4208.4(b), the employer's total contribution base units for the facilities and under the collective bargaining agreements with respect to which the employer incurred the multiple partial withdrawals exceed 30 percent of the total number of contribution base units with respect to which the employer had an obligation to contribute for those facilities and under those agreements for the base year (as defined in paragraph (d) of this section).

(2) *Resumption at fewer than all facilities or under fewer than all bargaining agreements*. If the employer satisfies the conditions in § 4208.4 (b)(1)(i) and (b)(1)(iii) and paragraph (c)(2)(i) of this section, or the conditions in § 4208.4 (b)(2)(i) and (b)(2)(iii) and paragraph (c)(2)(ii) of this section, as applicable, the employer's withdrawal liability shall be partially waived as set forth in paragraph (c)(2)(iii) of this section.

(i) With respect to a resumption of work under § 4208.4(b)(1), the condition under this paragraph is satisfied if, for the two consecutive plan years referred to in § 4208.4(b)(1), the employer's contribution base units for any reentered facility or agreement exceed 30 percent of the number of contribution base units with respect to which the employer had an obligation to contribute for that facility or under that agreement for the base year (as defined in paragraph (d) of this section).

(ii) With respect to a resumption of work under § 4208.4(b)(2), the condition under this paragraph is satisfied if, for the two consecutive plan years referred to in § 4208.4(b)(2), the employer's contribution base units for any reentered facility or agreement exceed 90 percent of the number of contribution base units with respect to which the employer had an obligation to contribute for that facility or under that agreement for the base year (as defined in paragraph (d) of this section).

(iii) The employer's reduced withdrawal liability and, if any, the reduced annual payments of the liability shall be determined by adding the average number of contribution base units that the employer is required to contribute for those two consecutive years for that facility(ies) or agreement(s) to the numerator of the fraction described in section 4206(a)(2)(A) of ERISA. The amount of any remaining partial withdrawal liability shall be paid over the schedule originally established starting with the first payment due after the revised payment schedule is issued under § 4208.3(c)(4).

(d) *Base year*. For purposes of this section, the base year contribution base units for a reentered facility(ies) or under a reentered agreement(s) are the average number of contribution base units for the facility(ies) or under the agreement(s) for the two plan years for which the employer's contribution base units for that facility(ies) or under that agreement(s) were highest within the five plan years immediately preceding the partial withdrawal.

§ 4208.9 Plan adoption of additional abatement conditions.

(a) *General rule*. A plan may by amendment, subject to the approval of the PBGC, adopt rules for the reduction or waiver of partial withdrawal liability under conditions other than those specified in § 4208.4, provided that such conditions relate to events occurring or factors existing subsequent to a partial withdrawal year. The request for PBGC approval shall be filed after the amendment is adopted. PBGC approval shall also be required for any subsequent modification of the amendment, other than repeal of the amendment. A plan amendment under this section may not be put into effect until it is approved by the PBGC. An amendment that is approved by the PBGC may apply retroactively.

(b) *Who may request.* The plan sponsor, or a duly authorized representative acting on behalf of the plan sponsor, shall sign and submit the request.

(c) *Where to file.* See § 4000.4 of this chapter for information on where to file.

(d) *Information.* Each request shall contain the following information:

(1) The name and address of the plan for which the plan amendment is being submitted and the telephone number of the plan sponsor or its duly authorized representative.

(2) The nine-digit Employer Identification Number (EIN) assigned to the plan sponsor by the IRS and the three-digit Plan Identification Number (PIN) assigned to the plan by the plan sponsor, and, if different, also the EIN-PIN last filed with the PBGC. If an EIN-PIN has not been assigned, that should be indicated.

(3) A copy of the executed amendment, including—

(i) The date on which the amendment was adopted;

(ii) The proposed effective date;

(iii) The full text of the rules on the reduction or waiver of partial withdrawal liability; and

(iv) The full text of the rules adjusting the reduction in the employer's liability for a subsequent partial or complete withdrawal, as required by section 4206(b)(1) of ERISA.

(4) A copy of the most recent actuarial valuation report of the plan.

(5) A statement certifying that notice of the adoption of the amendment and of the request for approval filed under this section has been given to all employers that have an obligation to contribute under the plan and to all employee organizations representing employees covered under the plan.

(e) *Supplemental information.* In addition to the information described in paragraph (d) of this section, a plan may submit any other information that it believes is pertinent to its request. The PBGC may require the plan sponsor to submit any other information that the PBGC determines that it needs to review a request under this section.

(f) *Criteria for PBGC approval.* The PBGC shall approve a plan amendment authorized by paragraph (a) of this section if it determines that the rules therein are consistent with the purposes of ERISA. An abatement amendment is not consistent with the purposes of ERISA unless the PBGC determines that—

(1) The amendment is not adverse to the interests of plan participants and beneficiaries in the aggregate; and

(2) The amendment would not significantly increase the PBGC's risk of loss with respect to the plan.

(Approved by the Office of Management and Budget under control no. 1212–0039)

[61 FR 34093, July 1, 1996, as amended at 68 FR 61355, Oct. 28, 2003]

§ 4208.10 Method of filing; method and date of issuance.

(a) *Method of filing.* The PBGC applies the rules in subpart A of part 4000 of this chapter to determine permissible methods of filing with the PBGC under this part.

(b) *Method of issuance.* The PBGC applies the rules in subpart B of part 4000 of this chapter to determine permissible methods of issuance under this part.

(c) *Date of issuance.* The PBGC applies the rules in subpart C of part 4000 of this chapter to determine the date that an issuance under this part was provided.

[68 FR 61355, Oct. 28, 2003]

PART 4211—ALLOCATING UNFUNDED VESTED BENEFITS TO WITHDRAWING EMPLOYERS

Subpart A—General

Sec.
4211.1 Purpose and scope.
4211.2 Definitions.
4211.3 Special rules for construction industry and IRC section 404(c) plans.
4211.4 Contributions for purposes of the numerator and denominator of the allocation fractions.

Subpart B—Changes Not Subject to PBGC Approval

4211.11 Changes not subject to PBGC approval.
4211.12 Modifications to the presumptive, modified presumptive and rolling-5 methods.

4211.13 Modifications to the direct attribution method.

Subpart C—Changes Subject to PBGC Approval

4211.21 Changes subject to PBGC approval.
4211.22 Requests for PBGC approval.
4211.23 Approval of alternative method.
4211.24 Special rule for certain alternative methods previously approved.

Subpart D—Allocation Methods for Merged Multiemployer Plans

4211.31 Allocation of unfunded vested benefits following the merger of plans.
4211.32 Presumptive method for withdrawals after the initial plan year.
4211.33 Modified presumptive method for withdrawals after the initial plan year.
4211.34 Rolling-5 method for withdrawals after the initial plan year.
4211.35 Direct attribution method for withdrawals after the initial plan year.
4211.36 Modifications to the determination of initial liabilities, the amortization of initial liabilities, and the allocation fraction.
4211.37 Allocating unfunded vested benefits for withdrawals before the end of the initial plan year.

AUTHORITY: 29 U.S.C. 1302(b)(3); 1391(c)(1), (c)(2)(D), (c)(5)(A), (c)(5)(B), (c)(5)(D), and (f).

SOURCE: 61 FR 34097, July 1, 1996, unless otherwise noted.

Subpart A—General

§ 4211.1 Purpose and scope.

(a) *Purpose*. Section 4211 of ERISA provides four methods for allocating unfunded vested benefits to employers that withdraw from a multiemployer plan: the presumptive method (section 4211(b)); the modified presumptive method (section 4211(c)(2)); the rolling-5 method (section 4211(c)(3)); and the direct attribution method (section 4211(c)(4)). With the minor exceptions covered in § 4211.3, a plan determines the amount of unfunded vested benefits allocable to a withdrawing employer in accordance with the presumptive method, unless the plan is amended to adopt an alternative allocative method. Generally, the PBGC must approve the adoption of an alternative allocation method. On September 25, 1984, 49 FR 37686, the PBGC granted a class approval of all plan amendments adopting one of the statutory alternative allocation methods. Subpart C sets forth the criteria and procedures for PBGC approval of nonstatutory alternative allocation methods. Section 4211(c)(5) of ERISA also permits certain modifications to the statutory allocation methods. The PBGC is to prescribe these modifications in a regulation, and plans may adopt them without PBGC approval. Subpart B contains the permissible modifications to the statutory methods. Plans may adopt other modifications subject to PBGC approval under subpart C. Finally, under section 4211(f) of ERISA, the PBGC is required to prescribe rules governing the application of the statutory allocation methods or modified methods by plans following merger of multiemployer plans. Subpart D sets forth alternative allocative methods to be used by merged plans. In addition, such plans may adopt any of the allocation methods or modifications described under subparts B and C in accordance with the rules under subparts B and C.

(b) *Scope*. This part applies to all multiemployer plans covered by title IV of ERISA.

§ 4211.2 Definitions.

The following terms are defined in § 4001.2 of this chapter: Code, employer, IRS, multiemployer plan, PBGC, plan, and plan year.

In addition, for purposes of this part:

Initial plan year means a merged plan's first complete plan year that begins after the establishment of the merged plan.

Initial plan year unfunded vested benefits means the unfunded vested benefits as of the close of the initial plan year, less the value as of the end of the initial plan year of all outstanding claims for withdrawal liability that can reasonably be expected to be collected from employers that had withdrawn as of the end of the initial plan year.

Merged plan means a plan that is the result of the merger of two or more multiemployer plans.

Merger means the combining of two or more multiemployer plans into one multiemployer plan.

Nonforfeitable benefit means a benefit described in § 4001.2 of this chapter plus, for purposes of this part, any adjustable benefit that has been reduced

by the plan sponsor pursuant to section 305(e)(8) of ERISA or section 432(e)(8) of the Code that would otherwise have been includable as a nonforfeitable benefit for purposes of determining an employer's allocable share of unfunded vested benefits.

Prior plan means the plan in which an employer participated immediately before that plan became a part of the merged plan.

Unfunded vested benefits means an amount by which the value of nonforfeitable benefits under the plan as defined for purposes of this section, exceeds the value of the assets of the plan.

Withdrawing employer means the employer for whom withdrawal liability is being calculated under section 4201 of ERISA.

Withdrawn employer means an employer who, prior to the withdrawing employer, has discontinued contributions to the plan or covered operations under the plan and whose obligation to contribute has not been assumed by a successor employer within the meaning of section 4204 of ERISA. A temporary suspension of contributions, including a suspension described in section 4218(2) of ERISA, is not considered a discontinuance of contributions.

[61 FR 34097, July 1, 1996, as amended at 73 FR 79635, Dec. 30, 2008]

§ 4211.3 Special rules for construction industry and IRC section 404(c) plans.

(a) *Construction plans.* Except as provided in §§ 4211.11(b) and 4211.21(b), a plan that primarily covers employees in the building and construction industry shall use the presumptive method for allocating unfunded vested benefits.

(b) *Section 404(c) plans.* A plan described in section 404(c) of the Code or a continuation of such a plan shall allocate unfunded vested benefits under the rolling-5 method unless the plan, by amendment, adopts an alternative method or modification.

§ 4211.4 Contributions for purposes of the numerator and denominator of the allocation fractions.

Each of the allocation fractions used in the presumptive, modified presumptive and rolling-5 methods is based on contributions that certain employers have made to the plan for a five-year period.

(a) The numerator of the allocation fraction, with respect to a withdrawing employer, is based on the ''sum of the contributions required to be made'' or the ''total amount required to be contributed'' by the employer for the specified period. For purposes of these methods, this means the amount that is required to be contributed under one or more collective bargaining agreements or other agreements pursuant to which the employer contributes under the plan, other than withdrawal liability payments or amounts that an employer is obligated to pay to the plan pursuant to section 305(e)(7) of ERISA or section 432(e)(7) of the Code (automatic employer surcharge). Employee contributions, if any, shall be excluded from the totals.

(b) The denominator of the allocation fraction is based on contributions that certain employers have made to the plan for a specified period. For purposes of these methods, and except as provided in § 4211.12, ''the sum of all contributions made'' or ''total amount contributed'' by employers for a plan year means the amounts considered contributed to the plan for purposes of section 412(b)(3)(A) or section 431(b)(3)(A) of the Code, other than withdrawal liability payments or amounts that an employer is obligated to pay to the plan pursuant to section 305(e)(7) of ERISA or section 432(e)(7) of the Code (automatic employer surcharge). For plan years before section 412 applies to the plan, ''the sum of all contributions made'' or ''total amount contributed'' means the amount reported to the IRS or the Department of Labor as total contributions for the plan year; for example, for the plan years in which the plan filed the Form 5500, the amount reported as total contributions on that form. Employee contributions, if any, shall be excluded from the totals.

[73 FR 79635, Dec. 30, 2008]

Subpart B—Changes Not Subject to PBGC Approval

§4211.11 Changes not subject to PBGC approval.

(a) *General rule.* A plan, other than a plan that primarily covers employees in the building and construction industry, may adopt, by amendment, any of the statutory allocation methods and any of the modifications set forth in §§4211.12 and 4211.13, without the approval of the PBGC.

(b) *Building and construction industry plans.* A plan that primarily covers employees in the building and construction industry may adopt, by amendment, any of the modifications to the presumptive rule set forth in §4211.12 without the approval of the PBGC.

§4211.12 Modifications to the presumptive, modified presumptive and rolling-5 methods.

(a) *Changing the period for counting contributions.* A plan sponsor may amend a plan to modify the denominators in the presumptive, modified presumptive and rolling-5 methods in accordance with one of the alternatives described in this paragraph. Except as provided in paragraph (a)(4) of this section, any amendment adopted under this paragraph shall be applied consistently to all plan years. Contributions counted for one plan year may be not counted for any other plan year. If a contribution is counted as part of the ''total amount contributed'' for any plan year used to determine a denominator, that contribution may not also be counted as a contribution owed with respect to an earlier year used to determine the same denominator, regardless of when the plan collected that contribution.

(1) A plan sponsor may amend a plan to provide that ''the sum of all contributions made'' or ''total amount contributed'' for a plan year means the amount of contributions that the plan actually received during the plan year, without regard to whether the contributions are treated as made for that plan year under section 412(b)(3)(A) or section 431(b)(3)(A) of the Code.

(2) A plan sponsor may amend a plan to provide that ''the sum of all contributions made'' or ''total amount contributed'' for a plan year means the amount of contributions actually received during the plan year, increased by the amount of contributions received during a specified period of time after the close of the plan year not to exceed the period described in section 412(c)(10) or section 431(c)(8) of the Code and regulations thereunder.

(3) A plan sponsor may amend a plan to provide that ''the sum of all contributions made'' or ''total amount contributed'' for a plan year means the amount of contributions actually received during the plan year, increased by the amount of contributions accrued during the plan year and received during a specified period of time after the close of the plan year not to exceed the period described in section 412(c)(10) or section 431(c)(8) of the Code and regulations thereunder.

(4) A plan sponsor may amend a plan to provide that—

(i) For plan years ending before September 26, 1980, ''the sum of all contributions made'' or ''total amount contributed'' means the amount of total contributions reported on Form 5500 and, for years before the plan was required to file Form 5500, the amount of total contributions reported on any predecessor reporting form required by the Department of Labor or the IRS; and

(ii) For subsequent plan years, ''the sum of all contributions made'' or ''total amount contributed'' means the amount described in §4211.4(b), or the amount described in paragraph (a)(1), (a)(2) or (a)(3) of this section.

(b) *Excluding contributions of significant withdrawn employers.* Contributions of certain withdrawn employers are excluded from the denominator in each of the fractions used to determine a withdrawing employer's share of unfunded vested benefits under the presumptive, modified presumptive and rolling-5 methods. Except as provided in paragraph (b)(1) of this section, contributions of all employers that permanently cease to have an obligation to contribute to the plan or permanently cease covered operations before the end of the period of plan years used to determine the fractions for allocating unfunded vested benefits under each of those methods (and contributions of all

employers that withdrew before September 26, 1980) are excluded from the denominators of the fractions.

(1) The plan sponsor of a plan using the presumptive, modified presumptive or rolling-5 method may amend the plan to provide that only the contributions of significant withdrawn employers shall be excluded from the denominators of the fractions used in those methods.

(2) For purposes of this paragraph (b), ''significant withdrawn employer'' means—

(i) An employer to which the plan has sent a notice of withdrawal liability under section 4219 of ERISA; or

(ii) A withdrawn employer that in any plan year used to determine the denominator of a fraction contributed at least $250,000 or, if less, 1% of all contributions made by employers for that year.

(3) If a group of employers withdraw in a concerted withdrawal, the plan shall treat the group as a single employer in determining whether the members are significant withdrawn employers under paragraph (b)(2) of this section. A ''concerted withdrawal'' means a cessation of contributions to the plan during a single plan year—

(i) By an employer association;

(ii) By all or substantially all of the employers covered by a single collective bargaining agreement; or

(iii) By all or substantially all of the employers covered by agreements with a single labor organization.

(c) *''Fresh start'' rules under presumptive method.* (1) The plan sponsor of a plan using the presumptive method (including a plan that primarily covers employees in the building and construction industry) may amend the plan to provide—

(i) A designated plan year ending after September 26, 1980, will substitute for the plan year ending before September 26, 1980, in applying section 4211(b)(1)(B), section 4211(b)(2)(B)(ii)(I), section 4211(b)(2)(D), section 4211(b)(3), and section 4211(b)(3)(B) of ERISA, and

(ii) Plan years ending after the end of the designated plan year in paragraph (c)(1)(i) will substitute for plan years ending after September 25, 1980, in applying section 4211(b)(1)(A), section 4211(b)(2)(A), and section 4211(b)(2)(B)(ii)(II) of ERISA.

(2) A plan amendment made pursuant to paragraph (c)(1) of this section must provide that the plan's unfunded vested benefits for plan years ending after the designated plan year are reduced by the value of all outstanding claims for withdrawal liability that can reasonably be expected to be collected from employers that had withdrawn from the plan as of the end of the designated plan year.

(3) In the case of a plan that primarily covers employees in the building and construction industry, the plan year designated by a plan amendment pursuant to paragraph (c)(1) of this section must be a plan year for which the plan has no unfunded vested benefits.

(d) *''Fresh start'' rules under modified presumptive method.* (1) The plan sponsor of a plan using the modified presumptive method may amend the plan to provide—

(i) A designated plan year ending after September 26, 1980, will substitute for the plan year ending before September 26, 1980, in applying section 4211(c)(2)(B)(i) and section 4211(c)(2)(B)(ii)(I) and (II) of ERISA, and

(ii) Plan years ending after the end of the designated plan year will substitute for plan years ending after September 25, 1980, in applying section 4211(c)(2)(B)(ii)(II) and section 4211(c)(2)(C)(i)(II) of ERISA.

(2) A plan amendment made pursuant to paragraph (d)(1) of this section must provide that the plan's unfunded vested benefits for plan years ending after the designated plan year are reduced by the value of all outstanding claims for withdrawal liability that can reasonably be expected to be collected from employers that had withdrawn from the plan as of the end of the designated plan year.

[61 FR 34097, July 1, 1996, as amended at 73 FR 79636, Dec. 30, 2008]

§ 4211.13 Modifications to the direct attribution method.

(a) *Error in direct attribution method.* The unfunded vested benefits allocated to a withdrawing employer under the direct attribution method are the sum

of the employer's attributable liability, determined under section 4211(c)(4)(A)(i) and (B) of ERISA, and the employer's share of the plan's unattributable liability, determined under section 4211(c)(4)(E) and allocated to the employer under section 4211(c)(4)(F). Plan sponsors should allocate unattributable liabilities on the basis of the employer's share of the attributable liabilities. However, section 4211(c)(4)(F) of ERISA, which describes the allocation of unattributable liabilities, contains a typographical error. Therefore, plans adopting the direct attribution method shall modify the phrase ''as the amount determined under subparagraph (C) for the employer bears to the sum of the amounts determined under subparagraph (C) for all employers under the plan'' in section 4211(c)(4)(F) by substituting ''subparagraph (B)'' for ''subparagraph (C)'' in both places it appears.

(b) *Allocating unattributable liability based on contributions in period before withdrawal.* A plan that is amended to adopt the direct attribution method may provide that instead of allocating the unattributable liability in accordance with section 4211(c)(4)(F) of ERISA, the employer's share of the plan's unattributable liability shall be determined by multiplying the plan's unattributable liability determined under section 4211(c)(4)(E) by a fraction—

(1) The numerator of which is the total amount of contributions required to be made by the withdrawing employer over a period of consecutive plan years (not fewer than five) ending before the withdrawal; and

(2) The denominator of which is the total amount contributed under the plan by all employers for the same period of years used in paragraph (b)(1) of this section, decreased by any amount contributed by an employer that withdrew from the plan during those plan years.

Subpart C—Changes Subject to PBGC Approval

§4211.21 Changes subject to PBGC approval.

(a) *General rule.* Subject to the approval of the PBGC pursuant to this subpart, a plan, other than a plan that primarily covers employees in the building and construction industry, may adopt, by amendment, any allocation method or modification to an allocation method that is not permitted under subpart B of this part.

(b) *Building and construction industry plans.* Subject to the approval of the PBGC pursuant to this subpart, a plan that primarily covers employees in the building and construction industry may adopt, by amendment, any allocation method or modification to an allocation method that is not permitted under §4211.12 if the method or modification is applicable only to its employers that are not construction industry employers within the meaning of section 4203(b)(1)(A) of ERISA.

(c) *Substantial overallocation not allowed.* No plan may adopt an allocation method or modification to an allocation method that results in a systematic and substantial overallocation of the plan's unfunded vested benefits.

(d) *Use of method prior to approval.* A plan may implement an alternative allocation method or modification to an allocation method that requires PBGC approval before that approval is given. However, the plan sponsor shall assess liability in accordance with this paragraph.

(1) *Demand for payment.* Until the PBGC approves the allocation method or modification, a plan may not demand withdrawal liability under section 4219 of ERISA in an amount that exceeds the lesser of the amount calculated under the amendment or the amount calculated under the allocation method that the plan would be required to use if the PBGC did not approve the amendment. The plan must inform each withdrawing employer of both amounts and explain that the higher amount may become payable depending on the PBGC's decision on the amendment.

(2) *Adjustment of liability.* When necessary because of the PBGC decision on the amendment, the plan shall adjust the amount demanded from each employer under paragraph (c)(1) of this section and the employer's withdrawal liability payment schedule. The length of the payment schedule shall be increased, as necessary. The plan shall

notify each affected employer of the adjusted liability and payment schedule and shall collect the adjusted amount in accordance with the adjusted schedule.

§ 4211.22 Requests for PBGC approval.

(a) *Filing of request*—(1) *In general*. A plan shall submit a request for approval of an alternative allocation method or modification to an allocation method to the PBGC in accordance with the requirements of this section as soon as practicable after the adoption of the amendment.

(2) *Method of filing*. The PBGC applies the rules in subpart A of part 4000 of this chapter to determine permissible methods of filing with the PBGC under this subpart.

(b) *Who shall submit*. The plan sponsor, or a duly authorized representative acting on behalf of the plan sponsor, shall sign the request.

(c) *Where to submit*. See § 4000.4 of this chapter for information on where to file.

(d) *Content*. Each request shall contain the following information:

(1) The name, address and telephone number of the plan sponsor, and of the duly authorized representative, if any, of the plan sponsor.

(2) The name of the plan.

(3) The nine-digit Employer Identification Number (EIN) that the Internal Revenue Service assigned to the plan sponsor and the three-digit Plan Identification Number (PIN) that the plan sponsor assigned to the plan, and, if different, also the EIN-PIN that the plan last filed with the PBGC. If the plan has no EIN-PIN, the request shall so indicate.

(4) The date the amendment was adopted.

(5) A copy of the amendment, setting forth the full text of the alternative allocation method or modification.

(6) The allocation method that the plan currently uses and a copy of the plan amendment (if any) that adopted the method.

(7) A statement certifying that notice of the adoption of the amendment has been given to all employers that have an obligation to contribute under the plan and to all employee organizations that represent employees covered by the plan.

(e) *Additional information*. In addition to the information listed in paragraph (d) of this section, the PBGC may require the plan sponsor to submit any other information that the PBGC determines is necessary for the review of an alternative allocation method or modification to an allocation method.

(Approved by the Office of Management and Budget under control number 1212–0035)

[61 FR 34097, July 1, 1996, as amended at 68 FR 61355, Oct. 28, 2003]

§ 4211.23 Approval of alternative method.

(a) *General*. The PBGC shall approve an alternative allocation method or modification to an allocation method if the PBGC determines that adoption of the method or modification would not significantly increase the risk of loss to plan participants and beneficiaries or to the PBGC.

(b) *Criteria*. An alternative allocation method or modification to an allocation method satisfies the requirements of paragraph (a) of this section if it meets the following three conditions:

(1) The method or modification allocates a plan's unfunded vested benefits, both for the adoption year and for the five subsequent plan years, to the same extent as any of the statutory allocation methods, or any modification to a statutory allocation method permitted under subpart B.

(2) The method or modification allocates unfunded vested benefits to each employer on the basis of either the employer's share of contributions to the plan or the unfunded vested benefits attributable to each employer. The method or modification may take into account differences in contribution rates paid by different employers and differences in benefits of different employers' employees.

(3) The method or modification fully reallocates among employers that have not withdrawn from the plan all unfunded vested benefits that the plan sponsor has determined cannot be collected from withdrawn employers, or that are not assessed against withdrawn employers because of section 4209, 4219(c)(1)(B) or 4225 of ERISA.

(c) *PBGC action on request.* The PBGC's decision on a request for approval shall be in writing. If the PBGC disapproves the request, the decision shall state the reasons for the disapproval and shall include a statement of the sponsor's right to request a reconsideration of the decision pursuant to part 4003 of this chapter.

§ 4211.24 Special rule for certain alternative methods previously approved.

A plan may not apply to any employer withdrawing on or after November 25, 1987, an allocation method approved by the PBGC before that date that allocates to the employer the greater of the amounts of unfunded vested benefits determined under two different allocation rules. Until a plan that has been using such a method is amended to adopt a valid allocation method, its allocation method shall be deemed to be the statutory allocation method that would apply if it had never been amended.

Subpart D—Allocation Methods for Merged Multiemployer Plans

§ 4211.31 Allocation of unfunded vested benefits following the merger of plans.

(a) *General rule.* Except as provided in paragraphs (b) through (d) of this section, when two or more multiemployer plans merge, the merged plan shall adopt one of the statutory allocation methods, in accordance with subpart B of this part, or one of the allocation methods prescribed in §§ 4211.32 through 4211.35, and the method adopted shall apply to all employer withdrawals occurring after the initial plan year. Alternatively, a merged plan may adopt its own allocation method in accordance with subpart C of this part. If a merged plan fails to adopt an allocation method pursuant to this subpart or subpart B or C, it shall use the presumptive allocation method prescribed in § 4211.32. In addition, a merged plan may adopt any of the modifications prescribed in § 4211.36 or in subpart B of this part.

(b) *Construction plans.* Except as provided in the next sentence, a merged plan that primarily covers employees in the building and construction industry shall use the presumptive allocation method prescribed in § 4211.32. However, the plan may, with respect to employers that are not construction industry employers within the meaning of section 4203(b)(1)(A) of ERISA, adopt, by amendment, one of the alternative methods prescribed in §§ 4211.33 through 4211.35 or any other allocation method. Any such amendment shall be adopted in accordance with subpart C of this part. A construction plan may, without the PBGC's approval, adopt by amendment any of the modifications set forth in § 4211.36 or any of the modifications to the statutory presumptive method set forth in § 4211.12.

(c) *Section 404(c) plans.* A merged plan that is a continuation of a plan described in section 404(c) of the Code shall use the rolling-5 allocation method prescribed in § 4211.34, unless the plan, by amendment, adopts an alternative method. The plan may adopt one of the statutory allocation methods or one of the allocation methods set forth in §§ 4211.32 through 4211.35 without PBGC approval; adoption of any other allocation method is subject to PBGC approval under subpart B of this plan. The plan may, without the PBGC's approval, adopt by amendment any of the modifications set forth in § 4211.36 or in subpart B of this part.

(d) *Withdrawals before the end of the initial plan year.* For employer withdrawals after the effective date of a merger and prior to the end of the initial plan year, the amount of unfunded vested benefits allocable to a withdrawing employer shall be determined in accordance with § 4211.37.

§ 4211.32 Presumptive method for withdrawals after the initial plan year.

(a) *General rule.* Under this section, the amount of unfunded vested benefits allocable to an employer that withdraws from a merged plan after the initial plan year is the sum (but not less than zero) of—

(1) The employer's proportional share, if any, of the unamortized amount of the plan's initial plan year unfunded vested benefits, as determined under paragraph (b) of this section;

(2) The employer's proportional share of the unamortized amount of the change in the plan's unfunded vested benefits for plan years ending after the initial plan year, as determined under paragraph (c) of this section; and

(3) The employer's proportional share of the unamortized amounts of the reallocated unfunded vested benefits (if any) as determined under paragraph (d) of this section.

(b) *Share of initial plan year unfunded vested benefits.* An employer's proportional share, if any, of the unamortized amount of the plan's initial plan year unfunded vested benefits is the sum of the employer's share of its prior plan's liabilities (determined under paragraph (b)(1) of this section) and the employer's share of the adjusted initial plan year unfunded vested benefits (determined under paragraph (b)(2) of this section), with such sum reduced by five percent of the original amount for each plan year subsequent to the initial year.

(1) *Share of prior plan liabilities.* An employer's share of its prior plan's liabilities is the amount of unfunded vested benefits that would have been allocable to the employer if it had withdrawn on the first day of the initial plan year, determined as if each plan had remained a separate plan.

(2) *Share of adjusted initial plan year unfunded vested benefits.* An employer's share of the adjusted initial plan year unfunded vested benefits equals the plan's initial plan year unfunded vested benefits, less the amount that would be determined under paragraph (b)(1) of this section for each employer that had not withdrawn as of the end of the initial plan year, multiplied by a fraction—

(i) The numerator of which is the amount determined under paragraph (b)(1) of this section; and

(ii) The denominator of which is the sum of the amounts that would be determined under paragraph (b)(1) of this section for each employer that had not withdrawn as of the end of the initial plan year.

(c) *Share of annual changes.* An employer's proportional share of the unamortized amount of the change in the plan's unfunded vested for the plan years ending after the end of the initial plan year is the sum of the employer's proportional shares (determined under paragraph (c)(2) of this section) of the unamortized amount of the change in unfunded vested benefits (determined under paragraph (c)(1) of this section) for each plan year in which the employer has an obligation to contribute under the plan ending after the initial plan year and before the plan year in which the employer withdraws.

(1) *Change in plan's unfunded vested benefits.* The change in a plan's unfunded vested benefits for a plan year is the amount by which the unfunded vested benefits at the end of a plan year, less the value as of the end of such year of all outstanding claims for withdrawal liability that can reasonably be expected to be collected from employers that had withdrawn as of the end of the initial plan year, exceed the sum of the unamortized amount of the initial plan year unfunded vested benefits (determined under paragraph (c)(1)(i) of this section) and the unamortized amounts of the change in unfunded vested benefits for each plan year ending after the initial plan year and preceding the plan year for which the change is determined (determined under paragraph (c)(1)(ii) of this section).

(i) *Unamortized amount of initial plan year unfunded vested benefits.* The unamortized amount of the initial plan year unfunded vested benefits is the amount of those benefits reduced by five percent of the original amount for each succeeding plan year.

(ii) *Unamortized amount of the change.* The unamortized amount of the change in a plan's unfunded vested benefits with respect to a plan year is the change in unfunded vested benefits for the plan year, reduced by five percent of such change for each succeeding plan year.

(2) *Employer's proportional share.* An employer's proportional share of the amount determined under paragraph (c)(1) of this section is computed by multiplying that amount by a fraction—

(i) The numerator of which is the total amount required to be contributed under the plan (or under the employer's prior plan) by the employer for the plan year in which the change

arose and the four preceding full plan years; and

(ii) The denominator of which is the total amount contributed under the plan (or under employer's prior plan) for the plan year in which the change arose and the four preceding full plan years by all employers that had an obligation to contribute under the plan for the plan year in which such change arose, reduced by any amount contributed by an employer that withdrew from the plan in the year in which the change arose.

(d) *Share of reallocated amounts.* An employer's proportional share of the unamortized amounts of the reallocated unfunded vested benefits, if any, is the sum of the employer's proportional shares (determined under paragraph (d)(2) of this section) of the unamortized amount of the reallocated unfunded vested benefits (determined under paragraph (d)(1) of this section) for each plan year ending before the plan year in which the employer withdrew from the plan.

(1) *Unamortized amount of reallocated unfunded vested benefits.* The unamortized amount of the reallocated unfunded vested benefits with respect to a plan year is the sum of the amounts described in paragraphs (d)(1)(i), (d)(1)(ii), and (d)(1)(iii) of this section for the plan year, reduced by five percent of such sum for each succeeding plan year.

(i) *Uncollectible amounts.* Amounts included as reallocable under this paragraph are those that the plan sponsor determines in that plan year to be uncollectible for reasons arising out of cases or proceedings under title 11, United States Code, or similar proceedings, with respect to an employer that withdrew after the close of the initial plan year.

(ii) *Relief amounts.* Amounts included as reallocable under this paragraph are those that the plan sponsor determines in that plan year will not be assessed as a result of the operation of section 4209, 4219(c)(1)(B), or 4225 of ERISA with respect to an employer that withdrew after the close of the initial plan year.

(iii) *Other amounts.* Amounts included as reallocable under this paragraph are those that the plan sponsor determines in that plan year to be uncollectible or unassessable for other reasons under standards not inconsistent with regulations prescribed by the PBGC.

(2) *Employer's proportional share.* An employer's proportional share of the amount of the reallocated unfunded vested benefits with respect to a plan year is computed by multiplying the unamortized amount of the reallocated unfunded vested benefits (as of the end of the year preceding the plan year in which the employer withdraws) by the allocation fraction described in paragraph (c)(2) of this section for the same plan year.

§4211.33 Modified presumptive method for withdrawals after the initial plan year.

(a) *General rule.* Under this section, the amount of unfunded vested benefits allocable to an employer that withdraws from a merged plan after the initial plan year is the sum of the employer's proportional share, if any, of the unamortized amount of the plan's initial plan year unfunded vested benefits (determined under paragraph (b) of this section) and the employer's proportional share of the unamortized amount of the unfunded vested benefits arising after the initial plan year (determined under paragraph (c) of this section).

(b) *Share of initial plan year unfunded vested benefits.* An employer's proportional share, if any, of the unamortized amount of the plan's initial plan year unfunded vested benefits is the sum of the employer's share of its prior plan's liabilities, as determined under §4211.32(b)(1), and the employer's share of the adjusted initial plan year unfunded vested benefits, as determined under §4211.32(b)(2), with such sum reduced as if it were being fully amortized in level annual installments over fifteen years beginning with the first plan year after the initial plan year.

(c) *Share of unfunded vested benefits arising after the initial plan year.* An employer's proportional share of the amount of the plan's unfunded vested benefits arising after the initial plan year is the employer's proportional share (determined under paragraph (c)(2) of this section) of the plan's unfunded vested benefits as of the end of

the plan year preceding the plan year in which the employer withdraws, reduced by the amount of the plan's unfunded vested benefits as of the close of the initial plan year (determined under paragraph (c)(1) of this section).

(1) *Amount of unfunded vested benefits.* The plan's unfunded vested benefits as of the end of the plan year preceding the plan year in which the employer withdraws shall be reduced by the sum of—

(i) The value as of that date of all outstanding claims for withdrawal liability that can reasonably be expected to be collected, with respect to employers that withdrew before that plan year; and

(ii) The sum of the amounts that would be allocable under paragraph (b) of this section to all employers that have an obligation to contribute in the plan year preceding the plan year in which the employer withdraws and that also had an obligation to contribute in the first plan year ending after the initial plan year.

(2) *Employer's proportional share.* An employer's proportional share of the amount determined under paragraph (c)(1) of this section is computed by multiplying that amount by a fraction—

(i) The numerator of which is the total amount required to be contributed under the plan (or under the employer's prior plan) by the employer for the last five full plan years ending before the date on which the employer withdraws; and

(ii) The denominator of which is the total amount contributed under the plan (or under each employer's prior plan) by all employers for the last five full plan years ending before the date on which the employer withdraws, increased by the amount of any employer contributions owed with respect to earlier periods that were collected in those plan years, and decreased by any amount contributed by an employer that withdrew from the plan (or prior plan) during those plan years.

§ 4211.34 Rolling-5 method for withdrawals after the initial plan year.

(a) *General rule.* Under this section, the amount of unfunded vested benefits allocable to an employer that withdraws from a merged plan after the initial plan year is the sum of the employer's proportional share, if any, of the unamortized amount of the plan's initial plan year unfunded vested benefits (determined under paragraph (b) of this section) and the employer's proportional share of the unamortized amount of the unfunded vested benefits arising after the initial plan year (determined under paragraph (c) of this section).

(b) *Share of initial plan year unfunded vested benefits.* An employer's proportional share, if any, of the unamortized amount of the plan's initial plan year unfunded vested benefits is the sum of the employer's share of its prior plan's liabilities, as determined under § 4211.32(b)(1), and the employer's share of the adjusted initial plan year unfunded vested benefits, as determined under § 4211.32(b)(2), with such sum reduced as if it were being fully amortized in level annual installments over five years beginning with the first plan year after the initial plan year.

(c) *Share of unfunded vested benefits arising after the initial plan year.* An employer's proportional share of the amount of the plan's unfunded vested benefits arising after the initial plan year is the employer's proportional share determined under § 4211.33(c).

§ 4211.35 Direct attribution method for withdrawals after the initial plan year.

The allocation method under this section is the allocation method described in section 4211(c)(4) of ERISA.

§ 4211.36 Modifications to the determination of initial liabilities, the amortization of initial liabilities, and the allocation fraction.

(a) *General rule.* A plan using any of the allocation methods described in §§ 4211.32 through 4211.34 may, by plan amendment and without PBGC approval, adopt any of the modifications described in this section.

(b) *Restarting initial liabilities.* A plan may be amended to allocate the initial plan year unfunded vested benefits under § 4211.32(b), § 4211.33(b), or § 4211.34(b) without separately allocating to employers the liabilities attributable to their participation under their prior plans. An amendment under

this paragraph must include an allocation fraction under paragraph (d) of this section for determining the employer's proportional share of the total unfunded benefits as of the close of the initial plan year.

(c) *Amortizing initial liabilities.* A plan may by amendment modify the amortization of initial liabilities in either of the following ways:

(1) If two or more plans that use the presumptive allocation method of section 4211(b) of ERISA merge, the merged plan may adjust the amortization of initial liabilities under § 4211.32(b) to amortize those unfunded vested benefits over the remaining length of the prior plans' amortization schedules.

(2) A plan that has adopted the allocation method under § 4211.33 or § 4211.34 may adjust the amortization of initial liabilities under § 4211.33(b) or § 4211.34(b) to amortize those unfunded vested benefits in level annual installments over any period of at least five and not more than fifteen years.

(d) *Changing the allocation fraction.* A plan may by amendment replace the allocation fraction under § 4211.32(b), § 4211.33(b), or § 4211.34(b) with any of the following contribution-based fractions—

(1) A fraction, the numerator of which is the total amount required to be contributed under the merged and prior plans by the withdrawing employer in the 60-month period ending on the last day of the initial plan year, and the denominator of which is the sum for that period of the contributions made by all employers that had not withdrawn as of the end of the initial plan year;

(2) A fraction, the numerator of which is the total amount required to be contributed by the withdrawing employer for the initial plan year and the four preceding full plan years of its prior plan, and the denominator of which is the sum of all contributions made over that period by employers that had not withdrawn as of the end of the initial plan year; or

(3) A fraction, the numerator of which is the total amount required to be contributed to the plan by the withdrawing employer since the effective date of the merger, and the denominator of which is the sum of all contributions made over that period by employers that had not withdrawn as of the end of the initial plan year.

§ 4211.37 Allocating unfunded vested benefits for withdrawals before the end of the initial plan year.

If an employer withdraws after the effective date of a merger and before the end of the initial plan year, the amount of unfunded vested benefits allocable to the employer shall be determined as if each plan had remained a separate plan. In making this determination, the plan sponsor shall use the allocation method of the withdrawing employer's prior plan and shall compute the employer's allocable share of the plan's unfunded vested benefits as if the day before the effective date of the merger were the end of the last plan year prior to the withdrawal.

PART 4219—NOTICE, COLLECTION, AND REDETERMINATION OF WITHDRAWAL LIABILITY

Subpart A—General

Sec.
4219.1 Purpose and scope.
4219.2 Definitions.

Subpart B—Redetermination of Withdrawal Liability Upon Mass Withdrawal

4219.11 Withdrawal liability upon mass withdrawal.
4219.12 Employers liable upon mass withdrawal.
4219.13 Amount of liability for *de minimis* amounts.
4219.14 Amount of liability for 20-year-limitation amounts.
4219.15 Determination of reallocation liability.
4219.16 Imposition of liability.
4219.17 Filings with PBGC.
4219.18 Withdrawal in a plan year in which substantially all employers withdraw.
4219.19 Method and date of issuance; computation of time.
4219.20 Information collection.

Subpart C—Overdue, Defaulted, and Overpaid Withdrawal Liability

4219.31 Overdue and defaulted withdrawal liability; overpayment.
4219.32 Interest on overdue, defaulted and overpaid withdrawal liability.

4219.33 Plan rules concerning overdue and defaulted withdrawal liability.

AUTHORITY: 29 U.S.C. 1302(b)(3) and 1399(c)(6).

SOURCE: 61 FR 34102, July 1, 1996, unless otherwise noted.

Subpart A—General

§ 4219.1 Purpose and scope.

(a) *Subpart A.* Subpart A of this part describes the purpose and scope of the provisions in this part and defined terms used in this part.

(b) *Subpart B*—(1) *Purpose.* When a multiemployer plan terminates by the withdrawal of every employer from the plan, or when substantially all employers withdraw from a multiemployer plan pursuant to an agreement or arrangement to withdraw from the plan, section 4219(c)(1)(D)(i) of ERISA requires that the liability of such withdrawing employers be determined (or redetermined) without regard to the 20-year limitation on annual payments established in section 4219(c)(1)(B) of ERISA. In addition, section 4219(c)(1)(D)(ii) requires that, upon the occurrence of a withdrawal described above, the total unfunded vested benefits of the plan be fully allocated among such withdrawing employers in a manner that is not inconsistent with PBGC regulations. Section 4209(c) of ERISA provides that the *de minimis* reduction established in sections 4209 (a) and (b) of ERISA shall not apply to an employer that withdraws in a plan year in which substantially all employers withdraw from the plan, or to an employer that withdraws pursuant to an agreement to withdraw during a period of one or more plan years during which substantially all employers withdraw pursuant to an agreement or arrangement to withdraw. The purpose of subpart B of this part is to prescribe rules, pursuant to sections 4219(c)(1)(D) and 4209(c) of ERISA, for redetermining an employer's withdrawal liability and fully allocating the unfunded vested benefits of a multiemployer plan in either of two mass-withdrawal situations: the termination of a plan by the withdrawal of every employer and the withdrawal of substantially all employers pursuant to an agreement or arrangement to withdraw. Subpart B also prescribes rules for redetermining the liability of an employer without regard to section 4209 (a) or (b) when the employer withdraws in a plan year in which substantially all employers withdraw, regardless of the occurrence of a mass withdrawal. (See part 4281 regarding the valuation of unfunded vested benefits to be fully allocated under subpart B, and parts 4041A and 4281 regarding the powers and duties of the plan sponsor of a plan terminated by mass withdrawal.)

(2) *Scope.* Subpart B applies to multiemployer plans covered by title IV of ERISA, with respect to which there is a termination by the withdrawal of every employer (including a plan created by a partition pursuant to section 4233 of ERISA) or a withdrawal of substantially all employers in the plan pursuant to an agreement or arrangement to withdraw from the plan, and to employers that withdraw from such multiemployer plans. The obligations of a plan sponsor of a mass-withdrawal-terminated plan under subpart B shall cease to apply when the plan assets are distributed in full satisfaction of all nonforfeitable benefits under the plan. Subpart B also applies, to the extent appropriate, to multiemployer plans with respect to which there is a withdrawal of substantially all employers in a single plan year and to employers that withdraw from such plans in that plan year.

(c) *Subpart C.* Subpart C establishes the interest rate to be charged on overdue, defaulted and overpaid withdrawal liability under section 4219(c)(6) of ERISA, and authorizes multiemployer plans to adopt alternative rules concerning assessment of interest and related matters. Subpart C applies to multiemployer plans covered under title IV of ERISA, and to employers that have withdrawn from such plans on or after September 26, 1980, except employers with respect to whom section 4221(f) or section 4221(g) of ERISA applies (provided that such employers are in compliance with the provisions of those sections, as applicable).

[61 FR 34102, July 1, 1996, as amended at 73 FR 79636, Dec. 30, 2008]

§4219.2 Definitions.

(a) The following terms are defined in §4001.2 of this chapter: employer, ERISA, IRS, mass withdrawal, multiemployer plan, PBGC, plan, and plan year.

(b) For purposes of this part:

Initial withdrawal liability means the amount of withdrawal liability determined in accordance with sections 4201 through 4225 of title IV without regard to the occurrence of a mass withdrawal.

Mass withdrawal liability means the sum of an employer's liability for *de minimis* amounts, liability for 20-year-limitation amounts, and reallocation liability.

Mass withdrawal valuation date means—

(1) In the case of a termination by mass withdrawal, the last day of the plan year in which the plan terminates; or

(2) in the case of a withdrawal of substantially all employers pursuant to an agreement or arrangement to withdraw, the last day of the plan year as of which substantially all employers have withdrawn. *Nonforfeitable benefit* means a benefit described in §4001.2 of this chapter plus, for purposes of this part, any adjustable benefit that has been reduced by the plan sponsor pursuant to section 305(e)(8) of ERISA and section 432(e)(8) of the Code that would otherwise have been includable as a nonforfeitable benefit.

Reallocation liability means the amount of unfunded vested benefits allocated to an employer in the event of a mass withdrawal.

Reallocation record date means a date selected by the plan sponsor, which shall be not earlier than the date of the plan's actuarial report for the year of the mass withdrawal and not later than one year after the mass withdrawal valuation date.

Redetermination liability means the sum of an employer's liability for *de minimis* amounts and the employer's liability for 20-year-limitation amounts.

Unfunded vested benefits means the amount by which the present value of a plan's vested nonforfeitable benefits (as defined for purposes of this section) exceeds the value of plan assets (including claims of the plan for unpaid initial withdrawal liability and redetermination liability), determined in accordance with section 4281 of ERISA and part 4281, subpart B.

(c) For purposes of subpart B—

Withdrawal means a complete withdrawal as defined in section 4203 of ERISA.

[61 FR 34102, July 1, 1996, as amended at 73 FR 79636, Dec. 30, 2008]

Subpart B—Redetermination of Withdrawal Liability Upon Mass Withdrawal

§4219.11 Withdrawal liability upon mass withdrawal.

(a) *Initial withdrawal liability*. The plan sponsor of a multiemployer plan that experiences a mass withdrawal shall determine initial withdrawal liability pursuant to section 4201 of ERISA of every employer that has completely or partially withdrawn from the plan and for whom the liability has not previously been determined and, in accordance with section 4202 of ERISA, notify each employer of the amount of the initial withdrawal liability and collect the amount of the initial withdrawal liability from each employer.

(b) *Mass withdrawal liability*. The plan sponsor of a multiemployer plan that experiences a mass withdrawal shall also—

(1) Notify withdrawing employers, in accordance with §4219.16(a), that a mass withdrawal has occurred;

(2) Within 150 days after the mass withdrawal valuation date, determine the liability of withdrawn employers for *de minimis* amounts and for 20-year-limitation amounts in accordance with §§4219.13 and 4219.14;

(3) Within one year after the reallocation record date, determine the reallocation liability of withdrawn employers in accordance with §4219.15;

(4) Notify each withdrawing employer of the amount of mass withdrawal liability determined pursuant to this subpart and the schedule for payment of such liability, and demand payment of and collect that liability, in accordance with §4219.16; and

(5) Notify the PBGC of the occurrence of a mass withdrawal and certify,

in accordance with § 4219.17, that determinations of mass withdrawal liability have been completed.

(c) *Extensions of time.* The plan sponsor of a multiemployer plan that experiences a mass withdrawal may apply to the PBGC for an extension of the deadlines contained in paragraph (b) of this section. The PBGC shall approve such a request only if it finds that failure to grant the extension will create an unreasonable risk of loss to plan participants or the PBGC.

§ 4219.12 Employers liable upon mass withdrawal.

(a) *Liability for de minimis amounts.* An employer shall be liable for *de minimis* amounts to the extent provided in section 4219(c)(1)(D) of ERISA if the employer's initial withdrawal liability was reduced pursuant to section 4209 (a) or (b) of ERISA.

(b) *Liability for 20-year-limitation amounts.* An employer shall be liable for 20-year-limitation amounts to the extent provided in section 4219(c)(1)(D) of ERISA.

(c) *Liability for reallocation liability.* An employer shall be liable for reallocation liability if the employer withdrew pursuant to an agreement or arrangement to withdraw from a multiemployer plan from which substantially all employers withdrew pursuant to an agreement or arrangement to withdraw, or if the employer withdrew after the beginning of the second full plan year preceding the termination date from a plan that terminated by the withdrawal of every employer, and, as of the reallocation record date—

(1) The employer has not been completely liquidated or dissolved;

(2) The employer is not the subject of a case or proceeding under title 11, United States Code, or any case or proceeding under similar provisions of state insolvency laws, except that a plan sponsor may determine that such an employer is liable for reallocation liability if the plan sponsor determines that the employer is reasonably expected to be able to pay its initial withdrawal liability and its redetermination liability in full and on time to the plan; and

(3) The plan sponsor has not determined that the employer's initial withdrawal liability or its redetermination liability is limited by section 4225 of ERISA.

(d) *General exclusion.* In the event that a plan experiences successive mass withdrawals, an employer that has been determined to be liable under this subpart for any component of mass withdrawal liability shall not be liable as a result of the same withdrawal for that component of mass withdrawal liability with respect to a subsequent mass withdrawal.

(e) *Free-look rule.* An employer that is not liable for initial withdrawal liability pursuant to a plan amendment adopting section 4210(a) of ERISA shall not be liable for *de minimis* amounts or for 20-year-limitation amounts, but shall be liable for reallocation liability in accordance with paragraph (c) of this section.

(f) *Payment of initial withdrawal liability.* An employer's payment of its total initial withdrawal liability, whether by prepayment or otherwise, for a withdrawal which is later determined to be part of a mass withdrawal shall not exclude the employer from or otherwise limit the employer's mass withdrawal liability under this subpart.

(g) *Agreement presumed.* Withdrawal by an employer during a period of three consecutive plan years within which substantially all employers withdraw from a plan shall be presumed to be a withdrawal pursuant to an agreement or arrangement to withdraw unless the employer proves otherwise by a preponderance of the evidence.

§ 4219.13 Amount of liability for *de minimis* amounts.

An employer that is liable for *de minimis* amounts shall be liable to the plan for the amount by which the employer's allocable share of unfunded vested benefits for the purpose of determining its initial withdrawal liability was reduced pursuant to section 4209 (a) or (b) of ERISA. Any liability for *de minimis* amounts determined under this section shall be limited by section 4225 of ERISA to the extent that section would have been limiting had the employer's initial withdrawal liability been determined without regard to the *de minimis* reduction.

§4219.14 Amount of liability for 20-year-limitation amounts.

An employer that is liable for 20-year-limitation amounts shall be liable to the plan for an amount equal to the present value of all initial withdrawal liability payments for which the employer was not liable pursuant to section 4219(c)(1)(B) of ERISA. The present value of such payments shall be determined as of the end of the plan year preceding the plan year in which the employer withdrew, using the assumptions that were used to determine the employer's payment schedule for initial withdrawal liability pursuant to section 4219(c)(1)(A)(ii) of ERISA. Any liability for 20-year-limitation amounts determined under this section shall be limited by section 4225 of ERISA to the extent that section would have been limiting had the employer's initial withdrawal liability been determined without regard to the 20-year limitation.

§4219.15 Determination of reallocation liability.

(a) *General rule.* In accordance with the rules in this section, the plan sponsor shall determine the amount of unfunded vested benefits to be reallocated and shall fully allocate those unfunded vested benefits among all employers liable for reallocation liability.

(b) *Amount of unfunded vested benefits to be reallocated.* For purposes of this section, the amount of a plan's unfunded vested benefits to be reallocated shall be the amount of the plan's unfunded vested benefits, determined as of the mass withdrawal valuation date, adjusted to exclude from plan assets the value of the plan's claims for unpaid initial withdrawal liability and unpaid redetermination liability that are deemed to be uncollectible under §4219.12(c)(1) or (c)(2).

(c) *Amount of reallocation liability.* An employer's reallocation liability shall be equal to the sum of the employer's initial allocable share of the plan's unfunded vested benefits, as determined under paragraph (c)(1) of this section, plus any unassessable amounts allocated to the employer under paragraph (c)(2), limited by section 4225 of ERISA to the extent that section would have been limiting had the employer's reallocation liability been included in the employer's initial withdrawal liability. If a plan is determined to have no unfunded vested benefits to be reallocated, the reallocation liability of each liable employer shall be zero.

(1) *Initial allocable share.* Except as otherwise provided in rules adopted by the plan pursuant to paragraph (d) of this section, and in accordance with paragraph (c)(3) of this section, an employer's initial allocable share shall be equal to the product of the plan's unfunded vested benefits to be reallocated, multiplied by a fraction—

(i) The numerator of which is the yearly average of the employer's contribution base units during the three plan years preceding the employer's withdrawal; and

(ii) The denominator of which is the sum of the yearly averages calculated under paragraph (c)(1)(i) of this section for each employer liable for reallocation liability.

(2) *Allocation of unassessable amounts.* If after computing each employer's initial allocable share of unfunded vested benefits, the plan sponsor knows that any portion of an employer's initial allocable share is unassessable as withdrawal liability because of the limitations in section 4225 of ERISA, the plan sponsor shall allocate any such unassessable amounts among all other liable employers. This allocation shall be done by prorating the unassessable amounts on the basis of each such employer's initial allocable share. No employer shall be liable for unfunded vested benefits allocated under paragraph (c)(1) or this paragraph to another employer that are determined to be unassessable or uncollectible subsequent to the plan sponsor's demand for payment of reallocation liability.

(3) *Contribution base unit.* For purposes of paragraph (c)(1) of this section, a contribution base unit means a unit with respect to which an employer has an obligation to contribute, such as an hour worked or shift worked or a unit of production, under the applicable collective bargaining agreement (or other agreement pursuant to which the employer contributes) or with respect to

which the employer would have an obligation to contribute if the contribution requirement with respect to the plan were greater than zero.

(d) *Plan rules.* Plans may adopt rules for calculating an employer's initial allocable share of the plan's unfunded vested benefits in a manner other than that prescribed in paragraph (c)(1) of this section, provided that those rules allocate the plan's unfunded vested benefits to substantially the same extent the prescribed rules would. Plan rules adopted under this paragraph shall operate and be applied uniformly with respect to each employer. If such rules would increase the reallocation liability of any employer, they may be effective with respect to that employer earlier than three full plan years after their adoption only if the employer consents to the application of the rules to itself. The plan sponsor shall give a written notice to each contributing employer and each employee organization that represents employees covered by the plan of the adoption of plan rules under this paragraph.

[61 FR 34102, July 1, 1996, as amended at 73 FR 79636, Dec. 30, 2008]

§ 4219.16 Imposition of liability.

(a) *Notice of mass withdrawal.* Within 30 days after the mass withdrawal valuation date, the plan sponsor shall give written notice of the occurrence of a mass withdrawal to each employer that the plan sponsor reasonably expects may be a liable employer under § 4219.12. The notice shall include—

(1) The mass withdrawal valuation date;

(2) A description of the consequences of a mass withdrawal under this subpart; and

(3) A statement that each employer obligated to make initial withdrawal liability payments shall continue to make those payments in accordance with its schedule. Failure of the plan sponsor to notify an employer of a mass withdrawal as required by this paragraph shall not cancel the employer's mass withdrawal liability or waive the plan's claim for such liability.

(b) *Notice of redetermination liability.* Within 30 days after the date as of which the plan sponsor is required under § 4219.11(b)(2) to have determined the redetermination liability of employers, the plan sponsor shall issue a notice of redetermination liability in writing to each employer liable under § 4219.12 for *de minimis* amounts or 20-year-limitation amounts, or both. The notice shall include—

(1) The amount of the employer's liability, if any, for *de minimis* amounts determined pursuant to § 4219.13;

(2) The amount of the employer's liability, if any, for 20-year-limitation amounts determined pursuant to § 4219.14;

(3) The schedule for payment of the liability determined under paragraph (f) of this section;

(4) A demand for payment of the liability in accordance with the schedule; and

(5) A statement of when the plan sponsor expects to issue notices of reallocation liability to liable employers.

(c) *Notice of reallocation liability.* Within 30 days after the date as of which the plan sponsor is required under § 4219.11(b)(3) to have determined the reallocation liability of employers, the plan sponsor shall issue a notice of reallocation liability in writing to each employer liable for reallocation liability. The notice shall include—

(1) The amount of the employer's reallocation liability determined pursuant to § 4219.15;

(2) The schedule for payment of the liability determined under paragraph (f) of this section; and

(3) A demand for payment of the liability in accordance with the schedule.

(d) *Notice to employers not liable.* The plan sponsor shall notify in writing any employer that receives a notice of mass withdrawal under paragraph (a) of this section and subsequently is determined not to be liable for mass withdrawal liability or any component thereof. The notice shall specify the liability from which the employer is excluded and shall be provided to the employer not later than the date by which liable employers are to be provided notices of reallocation liability pursuant to paragraph (c) of this section. If the employer is not liable for mass withdrawal liability, the notice shall also include a statement, if applicable, that the employer is obligated to continue

to make initial withdrawal liability payments in accordance with its existing schedule for payment of such liability.

(e) *Combined notices.* A plan sponsor may combine a notice of redetermination liability with the notice of and demand for payment of initial withdrawal liability. If a mass withdrawal and a withdrawal described in §4219.18 occur concurrently, a plan sponsor may combine—

(1) A notice of mass withdrawal with a notice of withdrawal issued pursuant to §4219.18(d); and

(2) A notice of redetermination liability with a notice of liability issued pursuant to §4219.18(e).

(f) *Payment schedules.* The plan sponsor shall establish payment schedules for payment of an employer's mass withdrawal liability in accordance with the rules in section 4219(c) of ERISA, as modified by this paragraph. For an employer that owes initial withdrawal liability as of the mass withdrawal valuation date, the plan sponsor shall establish new payment schedules for each element of mass withdrawal liability by amending the initial withdrawal liability payment schedule in accordance with the paragraph (f)(1) of this section. For all other employers, the payment schedules shall be established in accordance with paragraph (f)(2).

(1) *Employers owing initial withdrawal liability as of mass withdrawal valuation date.* For an employer that owes initial withdrawal liability as of the mass withdrawal valuation date, the plan sponsor shall amend the existing schedule of payments in order to amortize the new amounts of liability being assessed, *i.e.*, redetermination liability and reallocation liability. With respect to redetermination liability, the plan sponsor shall add that liability to the total initial withdrawal liability and determine a new payment schedule, in accordance with section 4219(c)(1) of ERISA, using the interest assumptions that were used to determine the original payment schedule. For reallocation liability, the plan sponsor shall add that liability to the present value, as of the date following the mass withdrawal valuation date, of the unpaid portion of the amended payment schedule described in the preceding sentence and determine a new payment schedule of level annual payments, calculated as if the first payment were made on the day following the mass withdrawal valuation date using the interest assumptions used for determining the amount of unfunded vested benefits to be reallocated.

(2) *Other employers.* For an employer that had no initial withdrawal liability, or had fully paid its liability prior to the mass withdrawal valuation date, the plan sponsor shall determine the payment schedule for redetermination liability, in accordance with section 4219(c)(1) of ERISA, in the same manner and using the same interest assumptions as were used or would have been used in determining the payment schedule for the employer's initial withdrawal liability. With respect to reallocation liability, the plan sponsor shall follow the rules prescribed in paragraph (f)(1) of this section.

(g) *Review of mass withdrawal liability determinations.* Determinations of mass withdrawal liability made pursuant to this subpart shall be subject to plan review under section 4219(b)(2) of ERISA and to arbitration under section 4221 of ERISA within the times prescribed by those sections. Matters that relate solely to the amount of, and schedule of payments for, an employer's initial withdrawal liability are not matters relating to the employer's liability under this subpart and are not subject to review pursuant to this paragraph.

(h) *Cessation of withdrawal liability obligations.* If the plan sponsor of a terminated plan distributes plan assets in full satisfaction of all nonforfeitable benefits under the plan, the plan sponsor's obligation to impose and collect liability, and each employer's obligation to pay liability, in accordance with this subpart ceases on the date of such distribution.

(i) *Determination that a mass withdrawal has not occurred.* If a plan sponsor determines, after imposing mass withdrawal liability pursuant to this subpart, that a mass withdrawal has not occurred, the plan sponsor shall refund to employers all payments of mass withdrawal liability with interest, except that a plan sponsor shall not refund payments of liability for *de minimis* amounts to an employer that

remains liable for such amounts under § 4219.18. Interest shall be credited at the interest rate prescribed in subpart C and shall accrue from the date the payment was received by the plan until the date of the refund.

§ 4219.17 Filings with PBGC.

(a) *Filing requirements*—(1) *In general*. The plan sponsor shall file with PBGC a notice that a mass withdrawal has occurred and separate certifications that determinations of redetermination liability and reallocation liability have been made and notices provided to employers in accordance with this subpart.

(2) *Method of filing*. The PBGC applies the rules in subpart A of part 4000 of this chapter to determine permissible methods of filing with the PBGC under this subpart.

(3) *Computation of time*. The PBGC applies the rules in subpart D of part 4000 of this chapter to compute any time period under this subpart for filing with the PBGC.

(b) *Who shall file*. The plan sponsor or a duly authorized representative acting on behalf of the plan sponsor shall sign and file the notice and the certifications.

(c) *When to file*. A notice of mass withdrawal for a plan from which substantially all employers withdraw pursuant to an agreement or arrangement to withdraw shall be filed with the PBGC no later than 30 days after the mass withdrawal valuation date. A notice of mass withdrawal termination shall be filed within the time prescribed for the filing of that notice in part 4041A, subparts A and B, of this chapter. Certifications of liability determinations shall be filed with the PBGC no later than 30 days after the date on which the plan sponsor is required to have provided employers with notices pursuant to § 4219.16.

(d) *Where to file*. See § 4000.4 of this chapter for information on where to file.

(e) *Date of filing*. The PBGC applies the rules in subpart C of part 4000 of this chapter to determine the date that a submission under this subpart was filed with the PBGC.

(f) *Contents of notice of mass withdrawal*. If a plan terminates by the withdrawal of every employer, a notice of termination filed in accordance with part 4041A, subparts A and B, of this chapter shall satisfy the requirements for a notice of mass withdrawal under this subpart. If substantially all employers withdraw from a plan pursuant to an agreement or arrangement to withdraw, the notice of mass withdrawal shall contain the following information:

(1) The name of the plan.

(2) The name, address and telephone number of the plan sponsor and of the duly authorized representative, if any, of the plan sponsor.

(3) The nine-digit Employer Identification Number (EIN) assigned by the IRS to the plan sponsor and the three-digit Plan Identification Number (PIN) assigned by the plan sponsor to the plan, and, if different, the EIN or PIN last filed with the PBGC. If no EIN or PIN has been assigned, the notice shall so indicate.

(4) The mass withdrawal valuation date.

(5) A description of the facts on which the plan sponsor has based its determination that a mass withdrawal has occurred, including the number of contributing employers withdrawn and the number remaining in the plan, and a description of the effect of the mass withdrawal on the plan's contribution base.

(g) *Contents of certifications*. Each certification shall contain the following information:

(1) The name of the plan.

(2) The name, address and telephone number of the plan sponsor and of the duly authorized representative, if any, of the plan sponsor.

(3) The nine-digit Employer Identification Number (EIN) assigned by the IRS to the plan sponsor and the three-digit Plan Identification Number (PIN) last assigned by the plan sponsor to the plan, and, if different, the EIN or PIN filed with the PBGC. If no EIN or PIN has been assigned, the notice shall so indicate.

(4) Identification of the liability determination to which the certification relates.

(5) A certification, signed by the plan sponsor or a duly authorized representative, that the determinations have

been made and the notices given in accordance with this subpart.

(6) For reallocation liability certifications—

(i) A certification, signed by the plan's actuary, that the determination of unfunded vested benefits has been done in accordance with part 4281, subpart B; and

(ii) A copy of plan rules, if any, adopted pursuant to §4219.15(d).

(h) *Additional information*. In addition to the information described in paragraph (g) of this section, the PBGC may require the plan sponsor to submit any other information the PBGC determines it needs in order to monitor compliance with this subpart.

[61 FR 34102, July 1, 1996, as amended at 68 FR 61355, Oct. 28, 2003]

§4219.18 Withdrawal in a plan year in which substantially all employers withdraw.

(a) *General rule*. An employer that withdraws in a plan year in which substantially all employers withdraw from the plan shall be liable to the plan for *de minimis* amounts if the employer's initial withdrawal liability was reduced pursuant to section 4209(a) or (b) of ERISA.

(b) *Amount of liability*. An employer's liability for *de minimis* amounts under this section shall be determined pursuant to §4219.13.

(c) *Plan sponsor's obligations*. The plan sponsor of a plan that experiences a withdrawal described in paragraph (a) shall—

(1) Determine and collect initial withdrawal liability of every employer that has completely or partially withdrawn, in accordance with sections 4201 and 4202 of ERISA;

(2) Notify each employer that is or may be liable under this section, in accordance with paragraph (d) of this section;

(3) Within 90 days after the end of the plan year in which the withdrawal occurred, determine, in accordance with paragraph (b) of this section, the liability of each withdrawing employer that is liable under this section;

(4) Notify each liable employer, in accordance with paragraph (e) of this section, of the amount of its liability under this section, demand payment of and collect that liability; and

(5) Certify to the PBGC that determinations of liability have been completed, in accordance with paragraph (g) of this section.

(d) *Notice of withdrawal*. Within 30 days after the end of a plan year in which a plan experiences a withdrawal described in paragraph (a), the plan sponsor shall notify in writing each employer that is or may be liable under this section. The notice shall specify the plan year in which substantially all employers have withdrawn, describe the consequences of such withdrawal under this section, and state that an employer obligated to make initial withdrawal liability payments shall continue to make those payments in accordance with its schedule.

(e) *Notice of liability*. Within 30 days after the determination of liability, the plan sponsor shall issue a notice of liability in writing to each liable employer. The notice shall include—

(1) The amount of the employer's liability for *de minimis* amounts;

(2) A schedule for payment of the liability, determined under §4219.16(f); and

(3) A demand for payment of the liability in accordance with the schedule.

(f) *Review of liability determinations*. Determinations of liability made pursuant to this section shall be subject to plan review under section 4219(b)(2) of ERISA and to arbitration under section 4221 of ERISA, subject to the limitations contained in §4219.16(g).

(g) *Notice to the PBGC*. No later than 30 days after the notices of liability under this section are required to be provided to liable employers, the plan sponsor shall file with the PBGC a notice. The notice shall include the items described in §4219.17 (g)(1) through (g)(3), as well as the information listed below. In addition, the PBGC may require the plan sponsor to submit any further information that the PBGC determines it needs in order to monitor compliance with this section.

(1) The plan year in which the withdrawal occurred.

(2) A description of the effect of the withdrawal, including the number of contributing employers that withdrew

in the plan year in which substantially all employers withdrew, the number of employers remaining in the plan, and a description of the effect of the withdrawal on the plan's contribution base.

(3) A certification, signed by the plan sponsor or duly authorized representative, that determinations have been made and notices given in accordance with this section.

§ 4219.19 Method and date of issuance; computation of time.

The PBGC applies the rules in subpart B of part 4000 of this chapter to determine permissible methods of issuance under this subpart. The PBGC applies the rules in subpart C of part 4000 of this chapter to determine the date that an issuance under this subpart was provided. The PBGC applies the rules in subpart D of part 4000 of this chapter to compute any time period for issuances to third parties under this subpart.

[68 FR 61356, Oct. 28, 2003]

§ 4219.20 Information collection.

The information collection requirements contained in §§ 4219.16, 4219.17, and 4219.18 have been approved by the Office of Management and Budget under control number 1212–0034.

[61 FR 34102, July 1, 1996. Redesignated at 68 FR 61356, Oct. 28, 2003]

Subpart C—Overdue, Defaulted, and Overpaid Withdrawal Liability

§ 4219.31 Overdue and defaulted withdrawal liability; overpayment.

(a) *Overdue withdrawal liability payment.* Except as otherwise provided in rules adopted by the plan in accordance with § 4219.33, a withdrawal liability payment is overdue if it is not paid on the date set forth in the schedule of payments established by the plan sponsor.

(b) *Default.* (1) Except as provided in paragraph (c)(1), ''default'' means—

(i) The failure of an employer to pay any overdue withdrawal liability payment within 60 days after the employer receives written notification from the plan sponsor that the payment is overdue; and

(ii) Any other event described in rules adopted by the plan which indicates a substantial likelihood that an employer will be unable to pay its withdrawal liability.

(2) In the event of a default, a plan sponsor may require immediate payment of all or a portion of the outstanding amount of an employer's withdrawal liability, plus interest. In the event that the plan sponsor accelerates only a portion of the outstanding amount of an employer's withdrawal liability, the plan sponsor shall establish a new schedule of payments for the remaining amount of the employer's withdrawal liability.

(c) *Plan review or arbitration of liability determination.* The following rules shall apply with respect to the obligation to make withdrawal liability payments during the period for plan review and arbitration and with respect to the failure to make such payments:

(1) A default as a result of failure to make any payments shall not occur until the 61st day after the last of—

(i) Expiration of the period described in section 4219(b)(2)(A) of ERISA;

(ii) If the employer requests review under section 4219(b)(2)(A) of ERISA of the plan's withdrawal liability determination or the schedule of payments established by the plan, expiration of the period described in section 4221(a)(1) of ERISA for initiation of arbitration; or

(iii) If arbitration is timely initiated either by the plan, the employer or both, issuance of the arbitrator's decision.

(2) Any amounts due before the expiration of the period described in paragraph (c)(1) shall be paid in accordance with the schedule established by the plan sponsor. If a payment is not made when due under the schedule, the payment is overdue and interest shall accrue in accordance with the rules and at the same rate set forth in § 4219.32.

(d) *Overpayments.* If the plan sponsor or an arbitrator determines that payments made in accordance with the schedule of payments established by the plan sponsor have resulted in an overpayment of withdrawal liability, the plan sponsor shall refund the overpayment, with interest, in a lump sum. The plan sponsor shall credit interest

on the overpayment from the date of the overpayment to the date on which the overpayment is refunded to the employer at the same rate as the rate for overdue withdrawal liability payments, as established under § 4219.32 or by the plan pursuant to § 4219.33.

§ 4219.32 Interest on overdue, defaulted and overpaid withdrawal liability.

(a) *Interest assessed*. The plan sponsor of a multiemployer plan—

(1) Shall assess interest on overdue withdrawal liability payments from the due date, as defined in paragraph (d) of this section, until the date paid, as defined in paragraph (e); and

(2) In the event of a default, may assess interest on any accelerated portion of the outstanding withdrawal liability from the due date, as defined in paragraph (d) of this section, until the date paid, as defined in paragraph (e).

(b) *Interest rate*. Except as otherwise provided in rules adopted by the plan pursuant to § 4219.33, interest under this section shall be charged or credited for each calendar quarter at an annual rate equal to the average quoted prime rate on short-term commercial loans for the fifteenth day (or next business day if the fifteenth day is not a business day) of the month preceding the beginning of each calendar quarter, as reported by the Board of Governors of the Federal Reserve System in Statistical Release H.15 (''Selected Interest Rates'').

(c) *Calculation of interest*. The interest rate under paragraph (b) of this section is the nominal rate for any calendar quarter or portion thereof. The amount of interest due the plan for overdue or defaulted withdrawal liability, or due the employer for overpayment, is equal to the overdue, defaulted, or overpaid amount multiplied by:

(1) For each full calendar quarter in the period from the due date (or date of overpayment) to the date paid (or date of refund), one-fourth of the annual rate in effect for that quarter;

(2) For each full calendar month in a partial quarter in that period, one-twelfth of the annual rate in effect for that quarter; and

(3) For each day in a partial month in that period, one-three-hundred-sixtieth of the annual rate in effect for that month.

(d) *Due date*. Except as otherwise provided in rules adopted by the plan, the due date from which interest accrues shall be, for an overdue withdrawal liability payment and for an amount of withdrawal liability in default, the date of the missed payment that gave rise to the delinquency or the default.

(e) *Date paid*. Any payment of withdrawal liability shall be deemed to have been paid on the date on which it is received.

§ 4219.33 Plan rules concerning overdue and defaulted withdrawal liability.

Plans may adopt rules relating to overdue and defaulted withdrawal liability, provided that those rules are consistent with ERISA. These rules may include, but are not limited to, rules for determining the rate of interest to be charged on overdue, defaulted and overpaid withdrawal liability (provided that the rate reflects prevailing market rates for comparable obligations); rules providing reasonable grace periods during which late payments may be made without interest; additional definitions of default which indicate a substantial likelihood that an employer will be unable to pay its withdrawal liability; and rules pertaining to acceleration of the outstanding balance on default. Plan rules adopted under this section shall be reasonable. Plan rules shall operate and be applied uniformly with respect to each employer, except that the rules may take into account the creditworthiness of an employer. Rules which take into account the creditworthiness of an employer shall state with particularity the categories of creditworthiness the plan will use, the specific differences in treatment accorded employers in different categories, and the standards and procedures for assigning an employer to a category.

PART 4220—PROCEDURES FOR PBGC APPROVAL OF PLAN AMENDMENTS

Sec.

4220.1 Purpose and scope.
4220.2 Definitions.

4220.3 Requests for PBGC approval.
4220.4 PBGC action on requests.

AUTHORITY: 29 U.S.C. 1302(b)(3), 1400.

SOURCE: 61 FR 34108, July 1, 1996, unless otherwise noted.

§ 4220.1 Purpose and scope.

(a) *General.* This part establishes procedures under which a plan sponsor shall request the PBGC to approve a plan amendment under section 4220 of ERISA. This part applies to all multiemployer plans covered by title IV of ERISA that adopt amendments pursuant to the authorization of sections 4201–4219 of ERISA (except for amendments adopted pursuant to section 4211(c)(5)). (The covered amendments are set forth in paragraph (b) of this section.) The subsequent modification of a plan amendment adopted by authorization of those sections is also covered by this part. This part does not, however, cover a plan amendment that merely repeals a previously adopted amendment, returning the plan to the statutorily prescribed rule.

(b) *Covered amendments.* Amendments made pursuant to the following sections of ERISA are covered by this part:

(1) Section 4203 (b)(1)(B)(ii).
(2) Section 4203(c)(4).
(3) Section 4205(c)(1).
(4) Section 4205(d).
(5) Section 4209(b).
(6) Section 4210(b)(2).
(7) Section 4211(c)(1).
(8) Section 4211(c)(4)(D).
(9) Section 4211(d)(1).
(10) Section 4211(d)(2).
(11) Section 4219(c)(1)(C)(ii)(I).
(12) Section 4219(c)(1)(C)(iii).

(c) *Exception.* Submission of a request for approval under this part is not required for a plan amendment for which the PBGC has published a notice in the FEDERAL REGISTER granting class approval.

§ 4220.2 Definitions.

The following terms are defined in § 4001.2 of this chapter: employer, ERISA, IRS, multiemployer plan, PBGC, plan, and plan sponsor.

§ 4220.3 Requests for PBGC approval.

(a) *Filing of request*—(1) *In general.* A request for approval of an amendment filed with the PBGC in accordance with this section shall constitute notice to the PBGC for purposes of the 90-day period specified in section 4220 of ERISA. A request is treated as filed on the date on which a request containing all information required by paragraph (d) of this section is received by the PBGC. Subpart C of part 4000 of this chapter provides rules for determining when the PBGC receives a submission.

(2) *Method of filing.* The PBGC applies the rules in subpart A of part 4000 of this chapter to determine permissible methods of filing with the PBGC under this part.

(b) *Who may request.* The plan sponsor, or a duly authorized representative acting on behalf of a plan sponsor, shall sign and submit the request.

(c) *Where to file.* See § 4000.4 of this chapter for information on where to file.

(d) *Information.* Each request filed shall contain the following information:

(1) The name of the plan for which the amendment is being submitted, and the name, address and the telephone number of the plan sponsor or its duly authorized representative.

(2) The nine-digit Employer Identification Number (EIN) assigned by the IRS to the plan sponsor and the three-digit Plan Identification Number (PIN) assigned by the plan sponsor to the plan, and, if different, the EIN or PIN last filed with PBGC. If no EIN or PIN has been assigned, that fact must be indicated.

(3) A copy of the amendment as adopted, including its proposed effective date.

(4) A copy of the most recent actuarial valuation of the plan.

(5) A statement containing a certification that notice of the adoption of the amendment has been given to all employers who have an obligation to contribute under the plan and to all employee organizations representing employees covered by the plan.

(6) Any other information that the plan sponsor believes to be pertinent to its request.

(e) *Supplemental information.* The PBGC may require a plan sponsor to submit any other information that the

PBGC determines to be necessary to review a request under this part. The PBGC may suspend the running of the 90-day period pursuant to § 4220.4(c), pending the submission of the supplemental information.

(f) *Computation of time.* The PBGC applies the rules in subpart D of part 4000 of this chapter to compute any time period under this part.

(Approved by the Office of Management and Budget under control number 1212–0031)

[61 FR 34108, July 1, 1996, as amended at 68 FR 61356, Oct. 28, 2003]

§ 4220.4 PBGC action on requests.

(a) *General.* Upon receipt of a complete request, the PBGC shall notify the plan sponsor in writing of the date of commencement of the 90-day period specified in section 4220 of ERISA. Except as provided in paragraph (c) of this section, the PBGC shall approve or disapprove a plan amendment submitted to it under this part within 90 days after receipt of a complete request for approval. If the PBGC fails to act within the 90-day period, or within that period notifies the plan sponsor that it will not disapprove the amendment, the amendment may be made effective without the approval of the PBGC.

(b) *Decision on request.* The PBGC's decision on a request for approval shall be in writing. If the PBGC disapproves the plan amendment, the decision shall state the reasons for the disapproval. An approval by the PBGC constitutes its finding only with respect to the issue of risk as set forth in section 4220(c) of ERISA, and not with respect to whether the amendment is otherwise properly adopted in accordance with the terms of ERISA and the plan in question.

(c) *Suspension of the 90-day period.* The PBGC may suspend the running of the 90-day period referred to in paragraph (a) of this section if it determines that additional information is required under § 4220.3(e). When it does so, PBGC's request for additional information will advise the plan sponsor that the running of 90-day period has been suspended. The 90-day period will resume running on the date on which the additional information is received by the PBGC, and the PBGC will notify the plan sponsor of that date upon receipt of the information.

PART 4221—ARBITRATION OF DISPUTES IN MULTIEMPLOYER PLANS

Sec.

4221.1 Purpose and scope.
4221.2 Definitions.
4221.3 Initiation of arbitration.
4221.4 Appointment of the arbitrator.
4221.5 Powers and duties of the arbitrator.
4221.6 Hearing.
4221.7 Reopening of proceedings.
4221.8 Award.
4221.9 Reconsideration of award.
4221.10 Costs.
4221.11 Waiver of rules.
4221.12 Calculation of periods of time.
4221.13 Filing and issuance rules.
4221.14 PBGC-approved arbitration procedures.

AUTHORITY: 29 U.S.C. 1302(b)(3), 1401.

SOURCE: 61 FR 34109, July 1, 1996, unless otherwise noted.

§ 4221.1 Purpose and scope.

(a) *Purpose.* The purpose of this part is to establish procedures for the arbitration, pursuant to section 4221 of ERISA, of withdrawal liability disputes arising under sections 4201 through 4219 and 4225 of ERISA.

(b) *Scope.* This part applies to arbitration proceedings initiated pursuant to section 4221 of ERISA and this part on or after September 26, 1985. On and after the effective date, any plan rules governing arbitration procedures (other than a plan rule adopting a PBGC-approved arbitration procedure in accordance with § 4221.14) are effective only to the extent that they are consistent with this part and adopted by the arbitrator in a particular proceeding.

§ 4221.2 Definitions.

The following terms are defined in § 4001.2 of this chapter: ERISA, IRS, multiemployer plan, PBGC, plan, and plan sponsor.

In addition, for purposes of this part:

Arbitrator means an individual or panel of individuals selected according to this part to decide a dispute concerning withdrawal liability.

Employer means an individual, partnership, corporation or other entity

against which a plan sponsor has made a demand for payment of withdrawal liability pursuant to section 4219(b)(1) of ERISA.

Party or *parties* means the employer and the plan sponsor involved in a withdrawal liability dispute.

Withdrawal liability dispute means a dispute described in § 4221.1(a) of this chapter.

§ 4221.3 Initiation of arbitration.

(a) *Time limits—in general.* Arbitration of a withdrawal liability dispute may be initiated within the time limits described in section 4221(a)(1) of ERISA.

(b) *Waiver or extension of time limits.* Arbitration shall be initiated in accordance with this section, notwithstanding any inconsistent provision of any agreement entered into by the parties before the date on which the employer received notice of the plan's assessment of withdrawal liability. The parties may, however, agree at any time to waive or extend the time limits for initiating arbitration.

(c) *Establishment of timeliness of initiation.* A party that unilaterally initiates arbitration is responsible for establishing that the notice of initiation of arbitration was timely received by the other party. If arbitration is initiated by agreement of the parties, the date on which the agreement to arbitrate was executed establishes whether the arbitration was timely initiated.

(d) *Contents of agreement or notice.* If the employer initiates arbitration, it shall include in the notice of initiation a statement that it disputes the plan sponsor's determination of its withdrawal liability and is initiating arbitration. A copy of the demand for withdrawal liability and any request for reconsideration, and the response thereto, shall be attached to the notice. If a party other than an employer initiates arbitration, it shall include in the notice a statement that it is initiating arbitration and a brief description of the questions on which arbitration is sought. If arbitration is initiated by agreement, the agreement shall include a brief description of the questions submitted to arbitration. In no case is compliance with formal rules of pleading required.

(e) *Effect of deficient agreement or notice.* If a party fails to object promptly in writing to deficiencies in an initiation agreement or a notice of initiation of arbitration, it waives its right to object.

§ 4221.4 Appointment of the arbitrator.

(a) *Appointment of and acceptance by arbitrator.* The parties shall select the arbitrator within 45 days after the arbitration is initiated, or within such other period as is mutually agreed after the initiation of arbitration, and shall mail to the designated arbitrator a notice of his or her appointment. The notice of appointment shall include a copy of the notice or agreement initiating arbitration, a statement that the arbitration is to be conducted in accordance with this part, and a request for a written acceptance by the arbitrator. The arbitrator's appointment becomes effective upon his or her written acceptance, stating his or her availability to serve and making any disclosures required by paragraph (b) of this section. If the arbitrator does not accept in writing within 15 days after the notice of appointment is mailed or delivered to him or her, he or she is deemed to have declined to act, and the parties shall select a new arbitrator in accordance with paragraph (d) of this section.

(b) *Disclosure by arbitrator and disqualification.* Upon accepting the appointment, the arbitrator shall disclose to the parties any circumstances likely to affect his or her impartiality, including any bias or any financial or personal interest in the result of the arbitration and any past or present relationship with the parties or their counsel. If any party determines that the arbitrator should be disqualified because of the information disclosed, that party shall notify all other parties and the arbitrator no later than 10 days after the arbitrator makes the disclosure required by this paragraph (but in no event later than the commencement of the hearing under § 4221.6). The arbitrator shall then withdraw, and the parties shall select another arbitrator in accordance with paragraph (d) of this section.

(c) *Challenge and withdrawal.* After the arbitrator has been selected, a

party may request that he or she withdraw from the proceedings at any point before a final award is rendered on the ground that he or she is unable to render an award impartially. The request for withdrawal shall be served on all other parties and the arbitrator by hand or by certified or registered mail (or by any other method that includes verification or acknowledgment of receipt and meets (if applicable) the requirements of § 4000.14 of this chapter) and shall include a statement of the circumstances that, in the requesting party's view, affect the arbitrator's impartiality and a statement that the requesting party has brought these circumstances to the attention of the arbitrator and the other parties at the earliest practicable point in the proceedings. If the arbitrator determines that the circumstances adduced are likely to affect his or her impartiality and have been presented in a timely fashion, he or she shall withdraw from the proceedings and notify the parties of the reasons for his or her withdrawal. The parties shall then select a new arbitrator in accordance with paragraph (d) of this section.

(d) *Filling vacancies.* If the designated arbitrator declines his or her appointment or, after accepting his or her appointment, is disqualified, resigns, dies, withdraws, or is unable to perform his or her duties at any time before a final award is rendered, the parties shall select another arbitrator to fill the vacancy. The selection shall be made, in accordance with the procedure used in the initial selection, within 20 days after the parties receive notice of the vacancy. The matter shall then be reheard by the newly chosen arbitrator, who may, in his or her discretion, rely on all or any portion of the record already established.

(e) *Failure to select arbitrator.* If the parties fail to select an arbitrator within the time prescribed by this section, either party or both may seek the designation and appointment of an arbitrator in a United States district court pursuant to the provisions of title 9 of the United States Code.

[61 FR 34109, July 1, 1996, as amended at 68 FR 61356, Oct. 28, 2003]

§ 4221.5 Powers and duties of the arbitrator.

(a) *Arbitration hearing.* Except as otherwise provided in this part, the arbitrator shall conduct the arbitration hearing under § 4221.6 in the same manner, and shall possess the same powers, as an arbitrator conducting a proceeding under title 9 of the United States Code.

(1) *Application of the law.* In reaching his or her decision, the arbitrator shall follow applicable law, as embodied in statutes, regulations, court decisions, interpretations of the agencies charged with the enforcement of ERISA, and other pertinent authorities.

(2) *Prehearing discovery.* The arbitrator may allow any party to conduct prehearing discovery by interrogatories, depositions, requests for the production of documents, or other means, upon a showing that the discovery sought is likely to lead to the production of relevant evidence and will not be disproportionately burdensome to the other parties. The arbitrator may impose appropriate sanctions if he or she determines that a party has failed to respond to discovery in good faith or has conducted discovery proceedings in bad faith or for the purpose of harassment. The arbitrator may, at the request of any party or on his or her own motion, require parties to give advance notice of expert or other witnesses that they intend to introduce.

(3) *Admissibility of evidence.* The arbitrator determines the relevance and materiality of the evidence offered during the course of the hearing and is the judge of the admissibility of evidence offered. Conformity to legal rules of evidence is not necessary. To the extent reasonably practicable, all evidence shall be taken in the presence of the arbitrator and the parties. The arbitrator may, however, consider affidavits, transcripts of depositions, and similar documents.

(4) *Production of documents or other evidence.* The arbitrator may subpoena witnesses or documents upon his or her own initiative or upon request by any party after determining that the evidence is likely to be relevant to the dispute.

(b) *Prehearing conference.* If it appears that a prehearing conference will expedite the proceedings, the arbitrator may, at any time before the commencement of the arbitration hearing under § 4221.6, direct the parties to appear at a conference to consider settlement of the case, clarification of issues and stipulation of facts not in dispute, admission of documents to avoid unnecessary proof, limitations on the number of expert or other witnesses, and any other matters that could expedite the disposition of the proceedings.

(c) *Proceeding without hearing.* The arbitrator may render an award without a hearing if the parties agree and file with the arbitrator such evidence as the arbitrator deems necessary to enable him or her to render an award under § 4221.8.

§ 4221.6 Hearing.

(a) *Time and place of hearing established.* Unless the parties agree to proceed without a hearing as provided in § 4221.5(c), the parties and the arbitrator shall, no later than 15 days after the written acceptance by the arbitrator is mailed to the parties, establish a date and place for the hearing. If agreement is not reached within the 15-day period, the arbitrator shall, within 10 additional days, choose a location and set a hearing date. The date set for the hearing may be no later than 50 days after the mailing date of the arbitrator's written acceptance.

(b) *Notice.* After the time and place for the hearing have been established, the arbitrator shall serve a written notice of the hearing on the parties by hand, by certified or registered mail, or by any other method that includes verification or acknowledgment of receipt and meets (if applicable) the requirements of § 4000.14 of this chapter.

(c) *Appearances.* The parties may appear in person or by counsel or other representatives. Any party that, after being duly notified and without good cause shown, fails to appear in person or by representative at a hearing or conference, or fails to file documents in a timely manner, is deemed to have waived all rights with respect thereto and is subject to whatever orders or determinations the arbitrator may make.

(d) *Record and transcript of hearing.* Upon the request of either party, the arbitrator shall arrange for a record of the arbitration hearing to be made by stenographic means or by tape recording. The cost of making the record and the costs of transcription and copying are costs of the arbitration proceedings payable as provided in § 4221.10(b) except that, if only one party requests that a transcript of the record be made, that party shall pay the cost of the transcript.

(e) *Order of hearing.* The arbitrator shall conduct the hearing in accordance with the following rules:

(1) *Opening.* The arbitrator shall open the hearing and place in the record the notice of initiation of arbitration or the initiation agreement. The arbitrator may ask for statements clarifying the issues involved.

(2) *Presentation of claim and response.* The arbitrator shall establish the procedure for presentation of claim and response in such a manner as to afford full and equal opportunity to all parties for the presentation of their cases.

(3) *Witnesses.* All witnesses shall testify under oath or affirmation and are subject to cross-examination by opposing parties. If testimony of an expert witness is offered by a party without prior notice to the other party, the arbitrator shall grant the other party a reasonable time to prepare for cross-examination and to produce expert witnesses on its own behalf. The arbitrator may on his or her own initiative call expert witnesses on any issue raised in the arbitration. The cost of any expert called by the arbitrator is a cost of the proceedings payable as provided in § 4221.10(b).

(f) *Continuance of hearing.* The arbitrator may, for good cause shown, grant a continuance for a reasonable period. When granting a continuance, the arbitrator shall set a date for resumption of the hearing.

(g) *Filing of briefs.* Each party may file a written statement of facts and argument supporting the party's position. The parties' briefs are due no later than 30 days after the close of the hearing. Within 15 days thereafter,

each party may file a reply brief concerning matters contained in the opposing brief. The arbitrator may establish a briefing schedule and may reduce or extend these time limits. Each party shall deliver copies of all of its briefs to the arbitrator and to all opposing parties.

[61 FR 34109, July 1, 1996, as amended at 68 FR 61356, Oct. 28, 2003]

§ 4221.7 Reopening of proceedings.

(a) *Grounds for reopening.* At any time before a final award is rendered, the proceedings may be reopened, on the motion of the arbitrator or at the request of any party, for the purpose of taking further evidence or rehearing or rearguing any matter, if the arbitrator determines that—

(1) The reopening is likely to result in new information that will have a material effect on the outcome of the arbitration;

(2) Good cause exists for the failure of the party that requested reopening to present such information at the hearing; and

(3) The delay caused by the reopening will not be unfairly injurious to any party.

(b) *Comments on and notice of reopening.* The arbitrator shall allow all affected parties the opportunity to comment on any motion or request to reopen the proceedings. If he or she determines that the proceedings should be reopened, he or she shall give all parties written notice of the reasons for reopening and of the schedule of the reopened proceedings.

§ 4221.8 Award.

(a) *Form.* The arbitrator shall render a written award that—

(1) States the basis for the award, including such findings of fact and conclusions of law (which need not be explicitly designated as such) as are necessary to resolve the dispute;

(2) Adjusts (or provides a method for adjusting) the amount or schedule of payments to be made after the award to reflect overpayments or underpayments made before the award was rendered or requires the plan sponsor to refund overpayments in accordance with § 4219.31(d); and

(3) Provides for an allocation of costs in accordance with § 4221.10.

(b) *Time of award.* Except as provided in paragraphs (c), (d), and (e) of this section, the arbitrator shall render the award no later than 30 days after the proceedings close. The award is rendered when filed or served on the parties as provided in § 4221.13. The award is final when the period for seeking modification or reconsideration in accordance with § 4221.9(a) has expired or the arbitrator has rendered a revised award in accordance with § 4221.9(c).

(c) *Reopened proceedings.* If the proceedings are reopened in accordance with § 4221.7 after the close of the hearing, the arbitrator shall render the award no later than 30 days after the date on which the reopened proceedings are closed.

(d) *Absence of hearing.* If the parties have chosen to proceed without a hearing, the arbitrator shall render the award no later than 30 days after the date on which final statements and proofs are filed with him or her.

(e) *Agreement for extension of time.* Notwithstanding paragraphs (b), (c), and (d), the parties may agree to an extension of time for the arbitrator's award in light of the particular facts and circumstances of their dispute.

(f) *Close of proceedings.* For purposes of paragraphs (b) and (c) of this section, the proceedings are closed on the date on which the last brief or reply brief is due or, if no briefs are to be filed, on the date on which the hearing or rehearing closes.

(g) *Publication of award.* After a final award has been rendered, the plan sponsor shall make copies available upon request to the PBGC and to all companies that contribute to the plan. The plan sponsor may impose reasonable charges for copying and postage.

§ 4221.9 Reconsideration of award.

(a) *Motion for reconsideration and objections.* A party may seek modification or reconsideration of the arbitrator's award by filing a written motion with the arbitrator and all opposing parties within 20 days after the award is rendered. Opposing parties may file objections to modification or reconsideration within 10 days after the motion is filed. The filing of a written motion for

modification or reconsideration suspends the 30-day period under section 4221(b)(2) of ERISA for requesting court review of the award. The 30-day statutory period again begins to run when the arbitrator denies the motion pursuant to paragraph (c) of this section or renders a revised award.

(b) *Grounds for modification or reconsideration.* The arbitrator may grant a motion for modification or reconsideration of the award only if—

(1) There is a numerical error or a mistake in the description of any person, thing, or property referred to in the award; or

(2) The arbitrator has rendered an award upon a matter not submitted to the arbitrator and the matter affects the merits of the decision; or

(3) The award is imperfect in a matter of form not affecting the merits of the dispute.

(c) *Decision of arbitrator.* The arbitrator shall grant or deny the motion for modification or reconsideration, and may render an opinion to support his or her decision within 20 days after the motion is filed with the arbitrator, or within 30 days after the motion is filed if an objection is also filed.

§ 4221.10 Costs.

The costs of arbitration under this part shall be borne by the parties as follows:

(a) *Witnesses.* Each party to the dispute shall bear the costs of its own witnesses.

(b) *Other costs of arbitration.* Except as provided in § 4221.6(d) with respect to a transcript of the hearing, the parties shall bear the other costs of the arbitration proceedings equally unless the arbitrator determines otherwise. The parties may, however, agree to a different allocation of costs if their agreement is entered into after the employer has received notice of the plan's assessment of withdrawal liability.

(c) *Attorneys' fees.* The arbitrator may require a party that initiates or contests an arbitration in bad faith or engages in dilatory, harassing, or other improper conduct during the course of the arbitration to pay reasonable attorneys' fees of other parties.

§ 4221.11 Waiver of rules.

Any party that fails to object in writing in a timely manner to any deviation from any provision of this part is deemed to have waived the right to interpose that objection thereafter.

§ 4221.12 Calculation of periods of time.

The PBGC applies the rules in subpart D of part 4000 of this chapter to compute any time period under this part.

[68 FR 61356, Oct. 28, 2003]

§ 4221.13 Filing and issuance rules.

(a) *Method and date of filing.* The PBGC applies the rules in subpart A of part 4000 of this chapter to determine permissible methods of filing with the PBGC under this part. The PBGC applies the rules in subpart C of part 4000 of this chapter to determine the date that a submission under this part was filed with the PBGC.

(b) *Where to file.* See § 4000.4 of this chapter for information on where to file.

(c) *Method and date of issuance.* The PBGC applies the rules in subpart B of part 4000 of this chapter to determine permissible methods of issuance under this part. The PBGC applies the rules in subpart C of part 4000 of this chapter to determine the date that an issuance under this part was provided.

[68 FR 61356, Oct. 28, 2003]

§ 4221.14 PBGC-approved arbitration procedures.

(a) *Use of PBGC-approved arbitration procedures.* In lieu of the procedures prescribed by this part, an arbitration may be conducted in accordance with an alternative arbitration procedure approved by the PBGC in accordance with paragraph (c) of this section. A plan may by plan amendment require the use of a PBGC-approved procedure for all arbitrations of withdrawal liability disputes, or the parties may agree to the use of a PBGC-approved procedure in a particular case.

(b) *Scope of alternative procedures.* If an arbitration is conducted in accordance with a PBGC-approved arbitration procedure, the alternative procedure

shall govern all aspects of the arbitration, with the following exceptions:

(1) The time limits for the initiation of arbitration may not differ from those provided for by §4221.3.

(2) The arbitrator shall be selected after the initiation of the arbitration.

(3) The arbitrator shall give the parties opportunity for prehearing discovery substantially equivalent to that provided by §4221.5(a)(2).

(4) The award shall be made available to the public to at least the extent provided by §4221.8(g).

(5) The costs of arbitration shall be allocated in accordance with §4221.10.

(c) *Procedure for approval of alternative procedures*. The PBGC may approve arbitration procedures on its own initiative by publishing an appropriate notice in the FEDERAL REGISTER. The sponsor of an arbitration procedure may request PBGC approval of its procedures by submitting an application to the PBGC. The application shall include:

(1) A copy of the procedures for which approval is sought;

(2) A description of the history, structure and membership of the organization that sponsors the procedures; and

(3) A discussion of the reasons why, in the sponsoring organization's opinion, the procedures satisfy the criteria for approval set forth in this section.

(d) *Criteria for approval of alternative procedures*. The PBGC shall approve an application if it determines that the proposed procedures will be substantially fair to all parties involved in the arbitration of a withdrawal liability dispute and that the sponsoring organization is neutral and able to carry out its role under the procedures. The PBGC may request comments on the application by publishing an appropriate notice in the FEDERAL REGISTER. Notice of the PBGC's decision on the application shall be published in the FEDERAL REGISTER. Unless the notice of approval specifies otherwise, approval will remain effective until revoked by the PBGC through a FEDERAL REGISTER notice.

[61 FR 34109, July 1, 1996, as amended at 68 FR 61356, Oct. 28, 2003]

SUBCHAPTER J—INSOLVENCY, REORGANIZATION, TERMINATION, AND OTHER RULES APPLICABLE TO MULTIEMPLOYER PLANS

PART 4231—MERGERS AND TRANSFERS BETWEEN MULTIEMPLOYER PLANS

Sec.
4231.1 Purpose and scope.
4231.2 Definitions.
4231.3 Requirements for mergers and transfers.
4231.4 Preservation of accrued benefits.
4231.5 Valuation requirement.
4231.6 Plan solvency tests.
4231.7 *De minimis* mergers and transfers.
4231.8 Notice of merger or transfer.
4231.9 Request for compliance determination.
4231.10 Actuarial calculations and assumptions.

AUTHORITY: 29 U.S.C. 1302(b)(3), 1411.

SOURCE: 63 FR 24421, May 4, 1998, unless otherwise noted.

§ 4231.1 Purpose and scope.

(a) *Purpose*. The purpose of this part is to prescribe notice requirements under section 4231 of ERISA for mergers and transfers of assets or liabilities among multiemployer pension plans. This part also interprets the other requirements of section 4231 and prescribes special rules for *de minimis* mergers and transfers. The collections of information in this part have been approved by the Office of Management and Budget under OMB control number 1212–0022.

(b) *Scope*. This part applies to mergers and transfers among multiemployer plans where all of the plans immediately before and immediately after the transaction are multiemployer plans covered by title IV of ERISA.

§ 4231.2 Definitions.

The following terms are defined in § 4001.2 of this chapter: Code, EIN, ERISA, fair market value, IRS, multiemployer plan, PBGC, plan, plan year, and PN.

In addition, for purposes of this part:

Actuarial valuation means a valuation of assets and liabilities performed by an enrolled actuary using the actuarial assumptions used for purposes of determining the charges and credits to the funding standard account under section 302 of ERISA and section 412 of the Code.

Certified change of collective bargaining representative means a change of collective bargaining representative certified under the Labor-Management Relations Act of 1947, as amended, or the Railway Labor Act, as amended.

Fair market value of assets has the same meaning as the term has for minimum funding purposes under section 302 of ERISA and section 412 of the Code.

Merger means the combining of two or more plans into a single plan. For example, a consolidation of two plans into a new plan is a merger.

Significantly affected plan means a plan that—

(1) Transfers assets that equal or exceed 15 percent of its assets before the transfer,

(2) Receives a transfer of unfunded accrued benefits that equal or exceed 15 percent of its assets before the transfer,

(3) Is created by a spinoff from another plan, or

(4) Engages in a merger or transfer (other than a *de minimis* merger or transfer) either—

(i) After such plan has terminated by mass withdrawal under section 4041A(a)(2) of ERISA, or

(ii) With another plan that has so terminated.

Transfer and *transfer of assets or liabilities* mean a diminution of assets or liabilities with respect to one plan and the acquisition of these assets or the assumption of these liabilities by another plan or plans (including a plan that did not exist prior to the transfer). However, the shifting of assets or liabilities pursuant to a written reciprocity agreement between two multiemployer plans in which one plan assumes liabilities of another plan is not a transfer of assets or liabilities. In addition, the shifting of assets between several funding media used for a single

plan (such as between trusts, between annuity contracts, or between trusts and annuity contracts) is not a transfer of assets or liabilities.

Unfunded accrued benefits means the excess of the present value of a plan's accrued benefits over the fair market value of its assets, determined on the basis of the actuarial valuation required under § 4231.5(b).

§ 4231.3 Requirements for mergers and transfers.

(a) *General requirements.* A plan sponsor may not cause a multiemployer plan to merge with one or more multiemployer plans or transfer assets or liabilities to or from another multiemployer plan unless the merger or transfer satisfies all of the following requirements:

(1) No participant's or beneficiary's accrued benefit is lower immediately after the effective date of the merger or transfer than the benefit immediately before that date.

(2) Actuarial valuations of the plans that existed before the merger or transfer have been performed in accordance with § 4231.5.

(3) For each plan that exists after the transaction, an enrolled actuary—

(i) Determines that the plan meets the applicable plan solvency requirement set forth in § 4231.6; or

(ii) Otherwise demonstrates that benefits under the plan are not reasonably expected to be subject to suspension under section 4245 of ERISA.

(4) The plan sponsor notifies the PBGC of the merger or transfer in accordance with § 4231.8.

(b) *Compliance determination.* If a plan sponsor requests a determination that a merger or transfer that may otherwise be prohibited by section 406(a) or (b)(2) of ERISA satisfies the requirements of section 4231 of ERISA, the plan sponsor must submit the information described in § 4231.9 in addition to the information required by § 4231.8. PBGC may request additional information if necessary to determine whether a merger or transfer complies with the requirements of section 4231 and this part. Plan sponsors are not required to request a compliance determination. Under section 4231(c) of ERISA, if the PBGC determines that the merger or transfer complies with section 4231 of ERISA and this part, the merger or transfer will not constitute a violation of the prohibited transaction provisions of section 406(a) and (b)(2) of ERISA.

(c) *Certified change in bargaining representative.* Transfers of assets and liabilities pursuant to a certified change in bargaining representative are governed by section 4235 of ERISA. Plan sponsors involved in such transfers are not required to comply with this part. However, under section 4235(f)(1) of ERISA, the plan sponsors of the plans involved in the transfer may agree to a transfer that complies with sections 4231 and 4234 of ERISA. Plan sponsors that elect to comply with sections 4231 and 4234 must comply with the rules in this part.

§ 4231.4 Preservation of accrued benefits.

Section 4231(b)(2) of ERISA and § 4231.3(a)(1) require that no participant's or beneficiary's accrued benefit may be lower immediately after the effective date of the merger or transfer than the benefit immediately before the merger or transfer. A plan that assumes an obligation to pay benefits for a group of participants satisfies this requirement only if the plan contains a provision preserving all accrued benefits. The determination of what is an accrued benefit must be made in accordance with section 411 of the Code and the regulations thereunder.

§ 4231.5 Valuation requirement.

(a) *In general.* For a plan that is not a significantly affected plan, or that is a significantly affected plan only because the merger or transfer involves a plan that has terminated by mass withdrawal under section 4041A(a)(2) of ERISA, the actuarial valuation requirement under section 4231(b)(4) of ERISA and § 4231.3(a)(2) is satisfied if an actuarial valuation has been performed for the plan based on the plan's assets and liabilities as of a date not more than three years before the date on which the notice of the merger or transfer is filed.

(b) *Significantly affected plans.* For a significantly affected plan, other than a plan that is a significantly affected

plan only because the merger or transfer involves a plan that has terminated by mass withdrawal under section 4041A(a)(2) of ERISA, the actuarial valuation requirement under section 4231(b)(4) of ERISA and § 4231.3(a)(2) is satisfied only if an actuarial valuation has been performed for the plan based on the plan's assets and liabilities as of a date not earlier than the first day of the last plan year ending before the proposed effective date of the transaction. The valuation must separately identify assets, contributions, and liabilities being transferred and must be based on the actuarial assumptions and methods that are expected to be used for the plan for the first plan year beginning after the transfer.

§ 4231.6 Plan solvency tests.

(a) *In general.* For a plan that is not a significantly affected plan, the plan solvency requirement of section 4231(b)(3) of ERISA and § 4231.3(a)(3)(i) is satisfied if—

(1) The expected fair market value of plan assets immediately after the merger or transfer equals or exceeds five times the benefit payments for the last plan year ending before the proposed effective date of the merger or transfer; or

(2) In each of the first five plan years beginning on or after the proposed effective date of the merger or transfer, expected plan assets plus expected contributions and investment earnings equal or exceed expected expenses and benefit payments for the plan year.

(b) *Significantly affected plans.* The plan solvency requirement of section 4231(b)(3) of ERISA and § 4231.3(a)(3)(i) is satisfied for a significantly affected plan if all of the following requirements are met:

(1) Expected contributions equal or exceed the estimated amount necessary to satisfy the minimum funding requirement of section 412(a) of the Code (including reorganization funding, if applicable) for the five plan years beginning on or after the proposed effective date of the transaction.

(2) The expected fair market value of plan assets immediately after the transaction equal or exceed the total amount of expected benefit payments for the first five plan years beginning on or after the proposed effective date of the transaction.

(3) Expected contributions for the first plan year beginning on or after the proposed effective date of the transaction equal or exceed expected benefit payments for that plan year.

(4) Expected contributions for the amortization period equal or exceed unfunded accrued benefits plus expected normal costs. The actuary may select as the amortization period either—

(i) The first 25 plan years beginning on or after the proposed effective date of the transaction, or

(ii) The amortization period for the resulting base when the combined charge base and the combined credit base are offset under section 412(b)(4) of the Code.

(c) *Rules for determinations.* In determining whether a transaction satisfies the plan solvency requirements set forth in this section, the following rules apply:

(1) Expected contributions after a merger or transfer must be determined by assuming that contributions for each plan year will equal contributions for the last full plan year ending before the date on which the notice of merger or transfer is filed with the PBGC. Contributions must be adjusted, however, to reflect—

(i) The merger or transfer,

(ii) Any change in the rate of employer contributions that has been negotiated (whether or not in effect), and

(iii) Any trend of changing contribution base units over the preceding five plan years or other period of time that can be demonstrated to be more appropriate.

(2) Expected normal costs must be determined under the funding method and assumptions expected to be used by the plan actuary for purposes of determining the minimum funding requirement under section 412 of the Code (which requires that such assumptions be reasonable in the aggregate). If the plan uses an aggregate funding method, normal costs must be determined under the entry age normal method.

(3) Expected benefit payments must be determined by assuming that current benefits remain in effect and that

all scheduled increases in benefits occur.

(4) The expected fair market value of plan assets immediately after the merger or transfer must be based on the most recent data available immediately before the date on which the notice is filed.

(5) Expected investment earnings must be determined using the same interest assumption to be used for determining the minimum funding requirement under section 412 of the Code.

(6) Expected expenses must be determined using expenses in the last plan year ending before the notice is filed, adjusted to reflect any anticipated changes.

(7) Expected plan assets for a plan year must be determined by adjusting the most current data on fair market value of plan assets to reflect expected contributions, investment earnings, benefit payments and expenses for each plan year between the date of the most current data and the beginning of the plan year for which expected assets are being determined.

§ 4231.7 *De minimis* mergers and transfers.

(a) *Special plan solvency rule.* The determination of whether a *de minimis* merger or transfer satisfies the plan solvency requirement in § 4231.6(a) may be made without regard to any other *de minimis* mergers or transfers that have occurred since the last actuarial valuation.

(b) *De minimis merger defined.* A merger is *de minimis* if the present value of accrued benefits (whether or not vested) of one plan is less than 3 percent of the fair market value of the other plan's assets.

(c) *De minimis transfer defined.* A transfer of assets or liabilities is *de minimis* if—

(1) The fair market value of the assets transferred, if any, is less than 3 percent of the fair market value of all the assets of the transferor plan;

(2) The present value of the accrued benefits transferred (whether or not vested) is less than 3 percent of the fair market value of all the assets of the transferee plan; and

(3) The transferee plan is not a plan that has terminated under section 4041A(a)(2) of ERISA.

(d) *Value of assets and benefits.* For purposes of paragraphs (b) and (c) of this section, the value of plan assets and accrued benefits may be determined as of any date prior to the proposed effective date of the transaction, but not earlier than the date of the most recent actuarial valuation.

(e) *Aggregation required.* In determining whether a merger or transfer is *de minimis,* the assets and accrued benefits transferred in previous *de minimis* mergers and transfers within the same plan year must be aggregated as described in paragraphs (e)(1) and (e)(2) of this section. For the purposes of those paragraphs, the value of plan assets may be determined as of the date during the plan year on which the total value of the plan's assets is the highest.

(1) A merger is not *de minimis* if the total present value of accrued benefits merged into a plan, when aggregated with all prior *de minimis* mergers of and transfers to that plan effective within the same plan year, equals or exceeds 3 percent of the value of the plan's assets.

(2) A transfer is not *de minimis* if, when aggregated with all previous *de minimis* mergers and transfers effective within the same plan year—

(i) The value of all assets transferred from a plan equals or exceeds 3 percent of the value of the plan's assets; or

(ii) The present value of all accrued benefits transferred to a plan equals or exceeds 3 percent of the plan's assets.

§ 4231.8 Notice of merger or transfer.

(a) *Filing of request*—(1) *When to file.* Except as provided in paragraph (f) of this section, a notice of a proposed merger or transfer must be filed not less than 120 days, or not less than 45 days in the case of a merger for which a compliance determination under § 4231.9 is not requested, before the effective date of the transaction. For purposes of this part, the effective date of a merger or transfer is the earlier of—

(i) The date on which one plan assumes liability for benefits accrued

under another plan involved in the transaction; or

(ii) The date on which one plan transfers assets to another plan involved in the transaction.

(2) *Method of filing*. The PBGC applies the rules in subpart A of part 4000 of this chapter to determine permissible methods of filing with the PBGC under this part.

(3) *Computation of time*. The PBGC applies the rules in subpart D of part 4000 of this chapter to compute any time period for filing under this part.

(b) *Who must file*. The plan sponsors of all plans involved in a merger or transfer, or the duly authorized representative(s) acting on behalf of the plan sponsors, must jointly file the notice required by this section.

(c) *Where to file*. See § 4000.4 of this chapter for information on where to file.

(d) *Date of filing*. The PBGC applies the rules in subpart C of part 4000 of this chapter to determine the date that a submission under this part was filed with the PBGC. For purposes of paragraph (a) of this section, the notice is not considered filed until all of the information required by paragraph (e) of this section has been submitted.

(e) *Information required*. Each notice must contain the following information:

(1) For each plan involved in the merger or transfer—

(i) The name of the plan;

(ii) The name, address and telephone number of the plan sponsor and of the plan sponsor's duly authorized representative, if any; and

(iii) The plan sponsor's EIN and the plan's PN and, if different, the EIN or PN last filed with the PBGC. If no EIN or PN has been assigned, the notice must so indicate.

(2) Whether the transaction being reported is a merger or transfer, whether it involves any plan that has terminated under section 4041A(a)(2) of ERISA, whether any significantly affected plan is involved in the transaction (and, if so, identifying each such plan), and whether it is a *de minimis* transaction as defined in § 4231.7 (and, if so, including an enrolled actuary's certification to that effect).

(3) The proposed effective date of the transaction.

(4) A copy of each plan provision stating that no participant's or beneficiary's accrued benefit will be lower immediately after the effective date of the merger or transfer than the benefit immediately before that date.

(5) For each plan that exists after the transaction, one of the following statements, certified by an enrolled actuary:

(i) A statement that the plan satisfies the applicable plan solvency test set forth in § 4231.6, indicating which is the applicable test.

(ii) A statement of the basis on which the actuary has determined that benefits under the plan are not reasonably expected to be subject to suspension under section 4245 of ERISA, including the supporting data or calculations, assumptions and methods.

(6) For each plan that exists before a transaction (unless the transaction is *de minimis* and does not involve any plan that has terminated under section 4041A(a)(2) of ERISA), a copy of the most recent actuarial valuation report that satisfies the requirements of § 4231.5.

(7) For each significantly affected plan that exists after the transaction, the following information used in making the plan solvency determination under § 4231.6(b):

(i) The present value of the accrued benefits and fair market value of plan assets under the valuation required by § 4231.5(b), allocable to the plan after the transaction.

(ii) The fair market value of assets in the plan after the transaction (determined in accordance with § 4231.6(c)(4)).

(iii) The expected benefit payments for the plan in the first plan year beginning on or after the proposed effective date of the transaction (determined in accordance with § 4231.6(c)(3)).

(iv) The contribution rates in effect for the plan for the first plan year beginning on or after the proposed effective date of the transaction.

(v) The expected contributions for the plan in the first plan year beginning on or after the proposed effective date of the transaction (determined in accordance with § 4231.6(c)(1)).

(f) *Waiver of notice*. The PBGC may waive the notice requirements of this section and section 4231(b)(1) of ERISA if—

(1) A plan sponsor demonstrates to the satisfaction of the PBGC that failure to complete the merger or transfer in the applicable notice period set forth in paragraph (a) of this section will cause harm to participants or beneficiaries of the plans involved in the transaction;

(2) The PBGC determines that the transaction complies with the requirements of section 4231 of ERISA; or

(3) The PBGC completes its review of the transaction.

[63 FR 24421, May 4, 1998, as amended at 68 FR 61356, Oct. 28, 2003; 79 FR 30463, May 28, 2014]

§4231.9 Request for compliance determination.

(a) *General*. The plan sponsor(s) of one or more plans involved in a merger or transfer, or the duly authorized representative(s) acting on behalf of the plan sponsor(s), may file a request for a determination that the transaction complies with the requirements of section 4231 of ERISA. The request must contain the information described in paragraph (b) or (c) of this section, as applicable.

(1) *The place of filing*. The request must be delivered to the address set forth in §4231.8(c).

(2) *Single request permitted for all de minimis transactions*. Because the plan solvency test for *de minimis* mergers and transfers is based on the most recent valuation (without adjustment for intervening *de minimis* transactions), a plan sponsor may submit a single request for a compliance determination covering all *de minimis* mergers or transfers that occur between one plan valuation and the next. However, the plan sponsor must still notify PBGC of each *de minimis* merger or transfer separately, in accordance with §4231.8. The single request for a compliance determination may be filed concurrently with any one of the notices of a *de minimis* merger or transfer.

(b) *Contents of request*—(1) *General*. A request for a compliance determination concerning a merger or transfer that is not *de minimis* must contain—

(i) A copy of the merger or transfer agreement;

(ii) A summary of the required calculations, including a complete description of assumptions and methods, on which the enrolled actuary based each certification that a plan involved in the merger or transfer satisfied a plan solvency test described in §4231.6; and

(iii) For each significantly affected plan, other than a plan that is a significantly affected plan only because the merger or transfer involves a plan that has terminated by mass withdrawal under section 4041A(a)(2) of ERISA, copies of all actuarial valuations performed within the 5 years preceding the date of filing the notice required under §4231.8.

(2) *De minimis merger or transfer*. A request for a compliance determination concerning a *de minimis* merger or transfer must contain one of the following statements for each plan that exists after the transaction, certified by an enrolled actuary:

(i) A statement that the plan satisfies one of the plan solvency tests set forth in §4231.6(a), indicating which test is satisfied.

(ii) A statement of the basis on which the actuary has determined that benefits under the plan are not reasonably expected to be subject to suspension under section 4245 of ERISA, including supporting data or calculations, assumptions and methods.

§4231.10 Actuarial calculations and assumptions.

(a) *Most recent valuation*. All calculations required by this part must be based on the most recent actuarial valuation as of the date of filing the notice, updated to show any material changes.

(b) *Assumptions*. All calculations required by this part must be based on methods and assumptions that are reasonable in the aggregate, based on generally accepted actuarial principles.

(c) *Updated calculations*. If the actual effective date of the merger or transfer is more than one year after the date the notice is filed with the PBGC, PBGC may require the plans involved to provide updated calculations and

representations based on the actual effective date of the transaction.

PART 4245—NOTICE OF INSOLVENCY

Sec.
4245.1 Purpose and scope.
4245.2 Definitions.
4245.3 Notice of insolvency.
4245.4 Contents of notice of insolvency.
4245.5 Notice of insolvency benefit level.
4245.6 Contents of notice of insolvency benefit level.
4245.7 PBGC address.
4245.8 Computation of time.

AUTHORITY: 29 U.S.C. 1302(b)(3), 1426(e).

SOURCE: 61 FR 34115, July 1, 1996, unless otherwise noted.

§ 4245.1 Purpose and scope.

(a) *Purpose*. The purpose of this part is to prescribe notice requirements pertaining to insolvent multiemployer plans that are in reorganization.

(b) *Scope*. This part applies to multiemployer plans in reorganization covered by title IV of ERISA, other than plans that have terminated by mass withdrawal under section 4041A(a)(2) of ERISA.

§ 4245.2 Definitions.

The following terms are defined in § 4001.2 of this chapter: employer, ERISA, IRS, multiemployer plan, nonforfeitable benefit, PBGC, person, plan, and plan year.

In addition, for purposes of this part:

Actuarial valuation means a report submitted to the plan in connection with a valuation of plan assets and liabilities, which, in the case of a plan covered by subparts C and D of part 4281, shall be performed in accordance with subpart B of part 4281.

Available resources means, for a plan year, available resources as described in section 4245(b)(3) of ERISA.

Benefits subject to reduction means those benefits accrued under plan amendments (or plans) adopted after March 26, 1980, or under collective bargaining agreements entered into after March 26, 1980, that are not eligible for the PBGC's guarantee under section 4022A(b) of ERISA.

Financial assistance means financial assistance from the PBGC under section 4261 of ERISA.

Insolvency benefit level means the greater of the resource benefit level or the benefit level guaranteed by the PBGC for each participant and beneficiary in pay status.

Insolvency year means insolvency year as described in section 4245(b)(4) of ERISA.

Insolvent means that a plan is unable to pay benefits when due during the plan year. A plan terminated by mass withdrawal is not insolvent unless it has been amended to eliminate all benefits that are subject to reduction under section 4281(c) of ERISA, or, in the absence of an amendment, no benefits under the plan are subject to reduction under section 4281(c) of ERISA.

Reasonably expected to enter pay status means, with respect to plan participants and beneficiaries, persons (other than those in pay status) who, according to plan records, are disabled, have applied for benefits, or have reached or will reach during the applicable period the normal retirement age under the plan, and any others whom it is reasonable for the plan sponsor to expect to enter pay status during the applicable period.

Reorganization means reorganization under section 4241(a) of ERISA.

Resource benefit level means resource benefit level as described in section 4245(b)(2) of ERISA.

§ 4245.3 Notice of insolvency.

(a) *Requirement of notice*. A plan sponsor of a multiemployer plan in reorganization that determines under section 4245 (b)(1), (d)(1) or (d)(2) of ERISA that the plan's available resources are or may be insufficient to pay benefits when due for a plan year shall so notify the PBGC and the interested parties, as defined in paragraph (e) of this section. A single notice may cover more than one plan year. The notices shall be delivered in the manner and within the time prescribed in this section and shall contain the information described in § 4245.4.

(b) *When delivered*. A plan sponsor shall mail or otherwise deliver the notices of insolvency no later than 30 days after it determines that the plan

is or may become insolvent, as described in paragraph (a) of this section. However, the notice to participants and beneficiaries in pay status may be delivered concurrently with the first benefit payment made more than 30 days after the determination of insolvency.

(c) *Delivery to PBGC*—(1) *Method of filing*. The PBGC applies the rules in subpart A of part 4000 of this chapter to determine permissible methods of filing the notice of insolvency with the PBGC under this part.

(2) *Filing date*. The PBGC applies the rules in subpart C of part 4000 of this chapter to determine the date that a notice of insolvency under this part was filed with the PBGC.

(d) *Delivery to interested parties*—(1) *Method of issuance*. The PBGC applies the rules in subpart B of part 4000 of this chapter to determine permissible methods of issuance of the notice of insolvency to interested parties. In addition to the methods permitted under subpart B of part 4000, the plan sponsor may notify interested parties, other than participants and beneficiaries who are in pay status when the notice is required to be delivered, by posting the notice at participants' work sites or publishing the notice in a union newsletter or in a newspaper of general circulation in the area or areas where participants reside. Notice to a participant shall be deemed notice to that participant's beneficiary or beneficiaries.

(2) *Issuance date*. The PBGC applies the rules in subpart C of part 4000 of this chapter to determine the date that the notice of insolvency was issued.

(e) *Interested parties*. For purposes of this part, the term ''interested parties'' means—

(1) Employers required to contribute to the plan;

(2) Employee organizations that, for collective bargaining purposes, represent plan participants employed by such employers; and

(3) Plan participants and beneficiaries.

[61 FR 34115, July 1, 1996, as amended at 68 FR 61357, Oct. 28, 2003]

§ 4245.4 Contents of notice of insolvency.

(a) *Notice to the PBGC*. A notice of insolvency required to be filed with the PBGC pursuant to § 4245.3 shall contain the information set forth below:

(1) The name of the plan.

(2) The name, address and telephone number of the plan sponsor and of the plan sponsor's duly authorized representative, if any.

(3) The nine-digit Employer Identification Number (EIN) assigned by the IRS to the plan sponsor and the three-digit Plan Identification Number (PIN) assigned by the plan sponsor to the plan, and, if different, the EIN or PIN last filed with the PBGC. If no EIN or PIN has been assigned, the notice shall so indicate.

(4) The IRS key district that has jurisdiction over determination letters with respect to the plan.

(5) The case number assigned to the plan by the PBGC. If the plan has no case number, the notice shall state whether the plan has previously filed a notice of insolvency with the PBGC and, if so, the date on which the notice was filed.

(6) The plan year or years for which the plan sponsor has determined that the plan is or may become insolvent.

(7) A copy of the plan document, including the last restatement of the plan and all subsequent amendments in effect, or to become effective, during the insolvency year or years. However, if a copy of the plan document was submitted to the PBGC with a previous notice of insolvency or notice of insolvency benefit level, only subsequent plan amendments need be submitted, and the notice shall state when the copy of the plan document was filed.

(8) A copy of the most recent actuarial valuation for the plan and a copy of the most recent Schedule B (Form 5500) filed for the plan, if the Schedule B contains more recent information than the actuarial valuation. If the actuarial valuation or Schedule B was previously submitted to the PBGC, it may be omitted, and the notice shall state the date on which the document was filed and that the information is still accurate and complete.

(9) The estimated amount of annual benefit payments under the plan (determined without regard to the insolvency) for each insolvency year.

(10) The estimated amount of the plan's available resources for each insolvency year.

(11) A certification, signed by the plan sponsor (or a duly authorized representative), that notices of insolvency have been given to all interested parties in accordance with the requirements of this part.

(b) *Notices to interested parties.* A notice of insolvency required under § 4245.3 to be given to interested parties, as defined in § 4245.3(e), shall contain the information set forth below:

(1) The name of the plan.

(2) The plan year or years for which the plan sponsor has determined that the plan is or may become insolvent.

(3) The estimated amount of annual benefit payment under the plan (determined without regard to the insolvency) for each insolvency year.

(4) The estimated amount of the plan's available resources for each insolvency year.

(5) A statement that, during the insolvency year, benefits above the amount that can be paid from available resources or the level guaranteed by the PBGC, whichever is greater, will be suspended, with a brief explanation of which benefits are guaranteed by the PBGC. The following statement may be included as an explanation of PBGC-guaranteed benefits:

Should the plan become insolvent, each participant's benefit guaranteed by the Pension Benefit Guaranty Corporation (PBGC) is determined as follows. Each participant's nonforfeitable monthly benefit payable under the plan at retirement is computed. This benefit is then divided by the participant's years of credited service under the plan. Of the resulting figure (the accrual rate), the first $5 is guaranteed at 100%. Any additional amount (up to $15) is either 75% or 65% guaranteed, depending on the past funding practices of the plan. Any remaining amount that exceeds $20 is not guaranteed. The PBGC guarantees the payment of a monthly benefit equal to this adjusted accrual rate times years of credited service. The PBGC does not guarantee benefits or benefit increases that have been in effect for fewer than 60 months before the plan becomes insolvent or is amended to reduce accrued benefits.

(6) The name, address, and telephone number of the plan administrator or other person designated by the plan sponsor to answer inquiries concerning benefits during the plan's insolvency.

[61 FR 34115, July 1, 1996, as amended at 68 FR 61357, Oct. 28, 2003]

§ 4245.5 Notice of insolvency benefit level.

(a) *Requirement of notice.* Except as provided in paragraph (b) of this section, for each insolvency year the plan sponsor shall notify the PBGC and the interested parties, as defined in § 4245.3(e), of the level of benefits expected to be paid during the year (the ''insolvency benefit level''). These notices shall be delivered in the manner and within the time prescribed in this section and shall contain the information described in § 4245.6.

(b) *Waiver of notice to certain interested parties.* The notice of insolvency benefit level required under this section need not be given to interested parties, other than participants and beneficiaries who are in pay status or are reasonably expected to enter pay status during the insolvency year, for an insolvency year immediately following the plan year in which a notice of insolvency was required to be delivered pursuant to § 4245.3, provided that the notice of insolvency was in fact delivered.

(c) *When delivered.* The plan sponsor shall mail or otherwise deliver the required notices of insolvency benefit level no later than 60 days before the beginning of the insolvency year, except that if the determination of insolvency is made fewer than 120 days before the beginning of the insolvency year, the notices shall be delivered within 60 days after the date of the plan sponsor's determination.

(d) *Delivery to PBGC*—(1) *Method of filing.* The PBGC applies the rules in subpart A of part 4000 of this chapter to determine permissible methods of filing a notice of insolvency benefit level with the PBGC under this part.

(2) *Filing date.* The PBGC applies the rules in subpart C of part 4000 of this chapter to determine the date that a notice of insolvency benefit level under this part was filed with the PBGC.

(e) *Delivery to interested parties*—(1) *Method of issuance.* The PBGC applies the rules in subpart B of part 4000 of this chapter to determine permissible methods of issuance of the notice of insolvency benefit levels to interested parties. In addition to the methods permitted under subpart B of part 4000, the plan sponsor may notify interested parties, other than participants and beneficiaries who are in pay status or reasonably expected to enter pay status during the insolvency year for which the notice is given, by posting the notice at participants' work sites or publishing the notice in a union newsletter or in a newspaper of general circulation in the area or areas where participants reside. Notice to a participant shall be deemed notice to that participant's beneficiary or beneficiaries.

(2) *Issuance date.* The PBGC applies the rules in subpart C of part 4000 of this chapter to determine the date that the notice of insolvency benefit levels was issued.

[61 FR 34115, July 1, 1996, as amended at 68 FR 61357, Oct. 28, 2003]

§ 4245.6 Contents of notice of insolvency benefit level.

(a) *Notice to the PBGC.* A notice of insolvency benefit level required to be filed with the PBGC pursuant to § 4245.5(a) shall contain the information set forth below, except as provided in the next sentence. The information required in paragraphs (a)(7) to (a)(10) need be submitted only if it is different from the information submitted to the PBGC with the notice of insolvency filed for that insolvency year (see § 4245.4 (a)(7) to (a)(10)) or the notice of insolvency benefit level filed for a prior year. When any information is omitted under this exception, the notice shall so state and indicate when the notice of insolvency or prior notice of insolvency benefit level was filed.

(1) The name of the plan.

(2) The name, address and telephone number of the plan sponsor and of the plan sponsor's authorized representative, if any.

(3) The nine-digit Employer Identification Number (EIN) assigned by the IRS to the plan sponsor and the three-digit Plan Identification Number (PIN) assigned by the plan sponsor to the plan, and, if different, the EIN or PIN last filed with the PBGC. If no EIN or PIN has been assigned, the notice shall so indicate.

(4) The IRS key district that has jurisdiction over determination letters with respect to the plan.

(5) The case number assigned to the plan by the PBGC.

(6) The plan year for which the notice is filed.

(7) A copy of the plan document, including any amendments, in effect during the insolvency year.

(8) A copy of the most recent actuarial valuation for the plan and a copy of the most recent Schedule B (Form 5500) filed for the plan, if the Schedule B contains more recent information than the actuarial valuation.

(9) The estimated amount of annual benefit payments under the plan (determined without regard to the insolvency) for the insolvency year.

(10) The estimated amount of the plan's available resources for the insolvency year.

(11) The estimated amount of the annual benefit payments guaranteed by the PBGC for the insolvency year.

(12) The amount of financial assistance, if any, requested from the PBGC.

(13) A certification, signed by the plan sponsor (or a duly authorized representative), that notices of insolvency benefit level have been given to all interested parties in accordance with the requirements of this part.

When financial assistance is requested, the PBGC may require the plan sponsor to submit additional information necessary to process the request.

(b) *Notices to interested parties other than participants in or entering pay status.* A notice of insolvency benefit level required by § 4245.5(a) to be delivered to interested parties, as defined in § 4245.3(e), other than a notice to a participant or beneficiary who is in pay status or is reasonably expected to enter pay status during the insolvency year, shall include the information set forth below:

(1) The name of the plan.

(2) The plan year for which the notice is issued.

(3) The estimated amount of annual benefit payments under the plan (determined without regard to the insolvency) for the insolvency year.

(4) The estimated amount of the plan's available resources for the insolvency year.

(5) The amount of financial assistance, if any, requested from the PBGC.

(c) *Notices to participants and beneficiaries in or entering pay status.* A notice of insolvency benefit level required by § 4245.5(a) to be delivered to participants and beneficiaries who are in pay status or are reasonably expected to enter pay status during the insolvency year for which the notice is given, shall include the following information:

(1) The name of the plan.

(2) The plan year for which the notice is issued.

(3) A statement of the monthly benefit expected to be paid to the participant or beneficiary during the insolvency year.

(4) A statement that in subsequent plan years, depending on the plan's available resources, this benefit level may be increased or decreased but will not fall below the level guaranteed by the PBGC, and that the participant or beneficiary will be notified in advance of the new benefit level if it is less than his full nonforfeitable benefit under the plan.

(5) The name, address, and telephone number of the plan administrator or other person designated by the plan sponsor to answer inquiries concerning benefits during the plan's insolvency.

[61 FR 34115, July 1, 1996, as amended at 68 FR 61357, Oct. 28, 2003]

§ 4245.7 PBGC address.

See § 4000.4 of this chapter for information on where to file.

[68 FR 61357, Oct. 28, 2003]

§ 4245.8 Computation of time.

The PBGC applies the rules in subpart D of part 4000 of this chapter to compute any time period for filing or issuance under this part.

[68 FR 61357, Oct. 28, 2003]

PART 4261—FINANCIAL ASSISTANCE TO MULTIEMPLOYER PLANS

SOURCE: 61 FR 34118, July 1, 1996, unless otherwise noted.

§ 4261.1 Cross-reference.

See § 4281.47 for procedures for applying to the PBGC for financial assistance under section 4261 of ERISA.

PART 4281—DUTIES OF PLAN SPONSOR FOLLOWING MASS WITHDRAWAL

Subpart A—General Provisions

Sec.
4281.1 Purpose and scope.
4281.2 Definitions.
4281.3 Filing and issuance rules.
4281.4 Collection of information.

Subpart B—Valuation of Plan Benefits and Plan Assets

4281.11 Valuation dates.
4281.12 Benefits to be valued.
4281.13 Benefit valuation methods—in general.
4281.14 Mortality assumptions.
4281.15 [Reserved]
4281.16 Benefit valuation methods—plans closing out.
4281.17 Asset valuation methods—in general.
4281.18 Outstanding claims for withdrawal liability.

Subpart C—Benefit Reductions

4281.31 Plan amendment.
4281.32 Notices of benefit reductions.
4281.33 Restoration of benefits.

Subpart D—Benefit Suspensions

4281.41 Benefit suspensions.
4281.42 Retroactive payments.
4281.43 Notices of insolvency.
4281.44 Contents of notices of insolvency.
4281.45 Notices of insolvency benefit level.
4281.46 Contents of notices of insolvency benefit level.
4281.47 Application for financial assistance.

AUTHORITY: 29 U.S.C. 1302(b)(3), 1341a, 1399(c)(1)(D), and 1441.

SOURCE: 61 FR 34118, July 1, 1996, unless otherwise noted.

Subpart A—General Provisions

§ 4281.1 Purpose and scope.

(a) *General*—(1) *Purpose*. When a multiemployer plan terminates by mass withdrawal under section 4041A(a)(2) of ERISA, the plan's assets and benefits must be valued annually under section 4281(b) of ERISA, and plan benefits may have to be reduced or suspended to the extent provided in section 4281 (c) or (d). This part implements the provisions of section 4281 and provides rules for applying for financial assistance from the PBGC under section 4261 of ERISA. The plan valuation rules in this part also apply to the determination of reallocation liability under section 4219(c)(1)(D) of ERISA and subpart B of part 4219 of this chapter for multiemployer plans that undergo mass withdrawal (with or without termination).

(2) *Scope*. This part applies to multiemployer plans covered by title IV of ERISA that have terminated by mass withdrawal under section 4041A(a)(2) of ERISA (including plans created by partition pursuant to section 4233 of ERISA). Subpart B of this part also applies to covered multiemployer plans that have undergone mass withdrawal without terminating.

(b) *Subpart B*. Subpart B establishes rules for determining the value of multiemployer plan benefits and assets, including outstanding claims for withdrawal liability, for plans required to perform annual valuations under section 4281(b) of ERISA or allocate unfunded vested benefits under section 4219(c)(1)(D) of ERISA.

(c) *Subpart C*. Subpart C sets forth procedures under which the plan sponsor of a terminated plan shall amend the plan to reduce benefits subject to reduction in accordance with section 4281(c) of ERISA and § 4041A.24(b) of this chapter. Subpart C applies to a plan for which the annual valuation required by § 4041A.24(a) indicates that the value of nonforfeitable benefits under the plan exceeds the value of the plan's assets (including claims for withdrawal liability) if, at the end of the plan year for which that valuation was done, the plan provided any benefits subject to reduction. Benefit reductions required to be made under subpart C shall not apply to accrued benefits under plans or plan amendments adopted on or before March 26, 1980, or under collective bargaining agreements entered into on or before March 26, 1980.

(d) *Subpart D*. Subpart D sets forth the procedures under which the plan sponsor of an insolvent plan must suspend benefit payments and issue insolvency notices in accordance with section 4281(d) of ERISA and § 4041A.25 (c) and (d) of this chapter. Subpart D applies to a plan that has been amended under section 4281(c) of ERISA and subpart C of this part to eliminate all benefits subject to reduction and to a plan that provided no benefits subject to reduction as of the date on which the plan terminated.

§ 4281.2 Definitions.

The following terms are defined in § 4001.2 of this chapter: annuity, employer, ERISA, fair market value, IRS, insurer, irrevocable commitment, mass withdrawal, multiemployer plan, nonforfeitable benefit, normal retirement age, PBGC, person, plan, plan administrator, and plan year.

In addition, for purposes of this part:

Available resources means, for a plan year, available resources as described in section 4245(b)(3) of ERISA.

Benefits subject to reduction means those benefits accrued under plan amendments (or plans) adopted after March 26, 1980, or under collective bargaining agreements entered into after March 26, 1980, that are not eligible for the PBGC's guarantee under section 4022A(b) of ERISA.

Financial assistance means financial assistance from the PBGC under section 4261 of ERISA.

Insolvency benefit level means the greater of the resource benefit level or the benefit level guaranteed by the PBGC for each participant and beneficiary in pay status.

Insolvency year means insolvency year as described in section 4245(b)(4) of ERISA.

Insolvent means that a plan is unable to pay benefits when due during the plan year. A plan terminated by mass withdrawal is not insolvent unless it has been amended to eliminate all benefits that are subject to reduction

under section 4281(c), or, in the absence of an amendment, no benefits under the plan are subject to reduction under section 4281(c) of ERISA.

Pro rata means that the required benefit reduction or payment shall be allocated among affected participants in the same proportion that each such participant's nonforfeitable benefits under the plan bear to all nonforfeitable benefits of those participants under the plan.

Reasonably expected to enter pay status means, with respect to plan participants and beneficiaries, persons (other than those in pay status) who, according to plan records, are disabled, have applied for benefits, or have reached or will reach during the applicable period the normal retirement age under the plan, and any others whom it is reasonable for the plan sponsor to expect to enter pay status during the applicable period.

Resource benefit level means resource benefit level as described in section 4245(b)(2) of ERISA.

Valuation date means the last day of the plan year in which the plan terminates and the last day of each plan year thereafter.

§ 4281.3 Filing and issuance rules.

(a) *Method of filing*. The PBGC applies the rules in subpart A of part 4000 of this chapter to determine permissible methods of filing with the PBGC under this part.

(b) *Method of issuance*. See § 4281.32(c) for notices of benefit reductions, § 4281.43(e) for notices of insolvency, and § 4281.45(c) for notices of insolvency benefit level.

(c) *Date of filing*. The PBGC applies the rules in subpart C of part 4000 of this chapter to determine the date that a submission under this part was filed with the PBGC.

(d) *Date of issuance*. The PBGC applies the rules in subpart C of part 4000 of this chapter to determine the date that an issuance under this part was provided.

(e) *Where to file*. See § 4000.4 of this chapter for information on where to file.

(f) *Computation of time*. The PBGC applies the rules in subpart D of part 4000 of this chapter to compute any time period for filing or issuance under this part.

[68 FR 61357, Oct. 28, 2003]

§ 4281.4 Collection of information.

The collection of information requirements contained in this part have been approved by the Office of Management and Budget under control number 1212–0032.

Subpart B—Valuation of Plan Benefits and Plan Assets

§ 4281.11 Valuation dates.

(a) *Annual valuations of mass-withdrawal-terminated plans*. The valuation dates for the annual valuation required under section 4281(b) of ERISA shall be the last day of the plan year in which the plan terminates and the last day of each plan year thereafter.

(b) *Valuations related to mass withdrawal reallocation liability*. The valuation date for determining the value of unfunded vested benefits (for purposes of allocation) under section 4219(c)(1)(D) of ERISA shall be—

(1) If the plan terminates by mass withdrawal, the last day of the plan year in which the plan terminates; or

(2) If substantially all the employers withdraw from the plan pursuant to an agreement or arrangement to withdraw from the plan, the last day of the plan year as of which substantially all employers have withdrawn from the plan pursuant to the agreement or arrangement.

§ 4281.12 Benefits to be valued.

(a) *Form of benefit*. The plan sponsor shall determine the form of each benefit to be valued, without regard to the form of benefit valued in any prior year, in accordance with the following rules:

(1) If a benefit is in pay status as of the valuation date, the plan sponsor shall value the form of benefit being paid.

(2) If a benefit is not in pay status as of the valuation date but a valid election with respect to the form of benefit has been made on or before the valuation date, the plan sponsor shall value the form of benefit so elected.

(3) If a benefit is not in pay status as of the valuation date and no valid election with respect to the form of benefit has been made on or before the valuation date, the plan sponsor shall value the form of benefit that, under the terms of the plan or applicable law, is payable in the absence of a valid election.

(b) *Timing of benefit.* The plan sponsor shall value benefits whose starting date is subject to election—

(1) By assuming that the starting date of each benefit is the earliest date, not preceding the valuation date, that could be elected; or

(2) By using any other assumption that the plan sponsor demonstrates to the satisfaction of the PBGC is more reasonable under the circumstances.

§ 4281.13 Benefit valuation methods—in general.

Except as otherwise provided in § 4281.16 (regarding plans that are closing out), the plan sponsor shall value benefits as of the valuation date by—

(a) Using the interest assumptions described in Table I of appendix B to part 4044 of this chapter;

(b) Using the mortality assumptions described in § 4281.14;

(c) Using interpolation methods, where necessary, at least as accurate as linear interpolation;

(d) Applying valuation formulas that accord with generally accepted actuarial principles and practices; and

(e) Adjusting the values to reflect the loading for expenses in accordance with appendix C to part 4044 of this chapter (substituting the term ''benefits'' for the term ''benefit liabilities (as defined in 29 U.S.C. § 1301(a)(16))'').

[61 FR 34118, July 1, 1996, as amended at 63 FR 38307, July 16, 1998]

§ 4281.14 Mortality assumptions.

(a) *General rule.* Subject to paragraph (b) of this section (regarding certain death benefits), the plan administrator shall use the mortality factors prescribed in paragraphs (c), (d), (e), and (f) of this section to value benefits under § 4281.13.

(b) *Certain death benefits.* If an annuity for one person is in pay status on the valuation date, and if the payment of a death benefit after the valuation date to another person, who need not be identifiable on the valuation date, depends in whole or in part on the death of the pay status annuitant, then the plan administrator shall value the death benefit using—

(1) The mortality rates that are applicable to the annuity in pay status under this section to represent the mortality of the pay status annuitant; and

(2) The mortality rates applicable to annuities not in pay status and to deferred benefits other than annuities, under paragraph (c) of this section, to represent the mortality of the death beneficiary.

(c) *Mortality rates for healthy lives.* The mortality rates applicable to annuities in pay status on the valuation date that are not being received as disability benefits, to annuities not in pay status on the valuation date, and to deferred benefits other than annuities, are,—

(1) For male participants, the rates in Table 1 of Appendix A to part 4044 of this chapter projected from 1994 to the calendar year in which the valuation date occurs plus 10 years using Scale AA from Table 2 of Appendix A to part 4044 of this chapter; and

(2) For female participants, the rates in Table 3 of Appendix A to part 4044 of this chapter projected from 1994 to the calendar year in which the valuation date occurs plus 10 years using Scale AA from Table 4 of Appendix A to part 4044 of this chapter.

(d) *Mortality rates for disabled lives (other than Social Security disability).* The mortality rates applicable to annuities in pay status on the valuation date that are being received as disability benefits and for which neither eligibility for, nor receipt of, Social Security disability benefits is a prerequisite, are,—

(1) For male participants, the lesser of—

(i) The rate determined from Table 1 of Appendix A to part 4044 of this chapter projected from 1994 to the calendar year in which the valuation date occurs plus 10 years using Scale AA from Table 2 of Appendix A to part 4044 of this chapter and setting the resulting table forward three years, or

(ii) The rate in Table 5 of Appendix A to part 4044 of this chapter.

(2) For female participants, the lesser of—

(i) The rate determined from Table 3 of Appendix A to part 4044 of this chapter projected from 1994 to the calendar year in which the valuation date occurs plus 10 years using Scale AA from Table 4 of Appendix A to part 4044 of this chapter and setting the resulting table forward three years, or

(ii) The rate in Table 6 of Appendix A to part 4044 of this chapter.

(e) *Mortality rates for disabled lives (Social Security disability).* The mortality rates applicable to annuities in pay status on the valuation date that are being received as disability benefits and for which either eligibility for, or receipt of, Social Security disability benefits is a prerequisite, are—

(1) For male participants, the rates in Table 5 of Appendix A to part 4044 of this chapter; and

(2) For female participants, the rates in Table 6 of Appendix A to part 4044 of this chapter.

(f) *Contingent annuitant mortality during deferral period.* If a participant's joint and survivor benefit is valued as a deferred annuity, the mortality of the contingent annuitant during the deferral period will be disregarded.

[71 FR 75117, Dec. 14, 2006]

§ 4281.15 [Reserved]

§ 4281.16 Benefit valuation methods—plans closing out.

(a) *Applicability.* For purposes of the annual valuation required by section 4281(b) of ERISA, the plan sponsor shall value the plan's benefits in accordance with paragraph (b) of this section if,—

(1) *Plans closed out before valuation.* Before the time when the valuation is performed, the plan has satisfied in full all liabilities for payment of nonforfeitable benefits, in a manner consistent with the terms of the plan and applicable law, by the purchase of one or more nonparticipating irrevocable commitments from one or more insurers, with respect to all benefits payable as annuities, and by the payment of single-sum cash distributions, with respect to benefits not payable as annuities; or

(2) *Plans to be closed out after valuation.* As of the time when the valuation is performed, the plan sponsor reasonably expects that the plan will close out before the next annual valuation date and the plan sponsor has a currently exercisable bid or bids to provide the irrevocable commitment(s) described in paragraph (a)(1) of this section and the total cost of the irrevocable commitment(s) under the bid, plus the total amount of the single-sum cash distributions described in paragraph (a)(1), does not exceed the value of the plan's assets, exclusive of outstanding claims for withdrawal liability, as determined under this subpart.

(b) *Valuation rule.* The present value of nonforfeitable benefits under this section is the total amount of single-sum cash distributions made or to be made plus the cost of the irrevocable commitment(s) purchased or to be purchased in order to satisfy in full all liabilities of the plan for nonforfeitable benefits.

§ 4281.17 Asset valuation methods—in general.

(a) *General rule.* The plan sponsor shall value plan assets as of the valuation date, using the valuation methods prescribed by this section and § 4281.18 (regarding outstanding claims for withdrawal liability), and deducting administrative liabilities in accordance with paragraph (c) of this section.

(b) *Assets other than withdrawal liability claims.* The plan sponsor shall value any plan asset (other than an outstanding claim for withdrawal liability) by such method or methods as the plan sponsor reasonably believes most accurately determine fair market value.

(c) *Adjustment for administrative liabilities.* In determining the total value of plan assets, the plan sponsor shall subtract all plan liabilities, other than liabilities to pay benefits. For this purpose, any obligation to repay financial assistance received from the PBGC under section 4261 of ERISA is a plan liability other than a liability to pay benefits. The obligation to repay financial assistance shall be valued by determining the value of the scheduled

payments in the same manner as prescribed in §4281.18(a) for valuing claims for withdrawal liability.

§4281.18 Outstanding claims for withdrawal liability.

(a) *Value of claim.* The plan sponsor shall value an outstanding claim for withdrawal liability owed by an employer described in paragraph (b) of this section in accordance with paragraphs (a)(1) and (a)(2) of this section:

(1) If the schedule of withdrawal liability payments provides for one or more series of equal payments, the plan sponsor shall value each series of payments as an annuity certain in accordance with the provisions of §4281.13.

(2) If the schedule of withdrawal liability payments provides for one or more payments that are not part of a series of equal payments as described in paragraph (a)(1) of this section, the plan sponsor shall value each such unequal payment as a lump-sum payment in accordance with the provisions of §4281.13.

(b) *Employers neither liquidated nor in insolvency proceedings.* The plan sponsor shall value an outstanding claim for withdrawal liability under paragraph (a) of this section if, as of the valuation date—

(1) The employer has not been completely liquidated or dissolved; and

(2) The employer is not the subject of any case or proceeding under title 11, United States Code, or any case or proceeding under similar provisions of state insolvency laws; except that the claim for withdrawal liability of an employer that is the subject of a proceeding described in this paragraph (b)(2) shall be valued under paragraph (a) of this section if the plan sponsor determines that the employer is reasonably expected to be able to pay its withdrawal liability in full and on time.

(c) *Claims against other employers.* The plan sponsor shall value at zero any outstanding claim for withdrawal liability owed by an employer that does not meet the conditions set forth in paragraph (b) of this section.

Subpart C—Benefit Reductions

§4281.31 Plan amendment.

The plan sponsor of a plan described in §4281.31 shall amend the plan to eliminate those benefits subject to reduction in excess of the value of benefits that can be provided by plan assets. Such reductions shall be effected by a pro rata reduction of all benefits subject to reduction or by elimination or pro rata reduction of any category of benefit. Benefit reductions required by this section shall apply only prospectively. An amendment required under this section shall take effect no later than six months after the end of the plan year for which it is determined that the value of nonforfeitable benefits exceeds the value of the plan's assets.

§4281.32 Notices of benefit reductions.

(a) *Requirement of notices.* A plan sponsor of a multiemployer plan under which a plan amendment reducing benefits is adopted pursuant to section 4281(c) of ERISA shall so notify the PBGC and plan participants and beneficiaries whose benefits are reduced by the amendment. The notices shall be delivered in the manner and within the time prescribed, and shall contain the information described, in this section. The notice required in this section shall be filed in lieu of the notice described in section 4244A(b)(2) of ERISA.

(b) *When delivered.* The plan sponsor shall mail or otherwise deliver the notices of benefit reduction no later than the earlier of—

(1) 45 days after the amendment reducing benefits is adopted; or

(2) The date of the first reduced benefit payment.

(c) *Method of issuance to interested parties.* The PBGC applies the rules in subpart B of part 4000 of this chapter to determine permissible methods of issuance of the notice of benefit reduction to interested parties. In addition to the methods permitted under subpart B of part 4000, the plan sponsor may notify interested parties, other than participants and beneficiaries who are in pay status when the notice is required to be delivered or who are reasonably expected to enter pay status before the end of the plan year after

the plan year in which the amendment is adopted, by posting the notice at participants' work sites or publishing the notice in a union newsletter or in a newspaper of general circulation in the area or areas where participants reside. Notice to a participant shall be deemed notice to that participant's beneficiary or beneficiaries.

(d) *Contents of notice to the PBGC.* A notice of benefit reduction required to be filed with the PBGC pursuant to paragraph (a) of this section shall contain the following information:

(1) The name of the plan.

(2) The name, address, and telephone number of the plan sponsor and of the plan sponsor's duly authorized representative, if any.

(3) The nine-digit Employer Identification Number (EIN) assigned by the IRS to the plan sponsor and the three-digit Plan Number (PN) assigned by the plan sponsor to the plan, and, if different, the EIN or PN last filed with the PBGC. If no EIN or PN has been assigned, the notice shall so state.

(4) The case number assigned by the PBGC to the filing of the plan's notice of termination pursuant to part 4041A, subpart B, of this chapter.

(5) A statement that a plan amendment reducing benefits has been adopted, listing the date of adoption and the effective date of the amendment.

(6) A certification, signed by the plan sponsor or its duly authorized representative, that notice of the benefit reductions has been given to all participants and beneficiaries whose benefits are reduced by the plan amendment, in accordance with the requirements of this section.

(e) *Contents of notice to participants and beneficiaries.* A notice of benefit reductions required under paragraph (a) of this section to be given to plan participants and beneficiaries whose benefits are reduced by the amendment shall contain the following information:

(1) The name of the plan.

(2) A statement that a plan amendment reducing benefits has been adopted, listing the date of adoption and the effective date of the amendment.

(3) A summary of the amendment, including a description of the effect of the amendment on the benefits to which it applies.

(4) The name, address, and telephone number of the plan administrator or other person designated by the plan sponsor to answer inquiries concerning benefits.

[61 FR 34118, July 1, 1996, as amended at 68 FR 61457, Oct. 28, 2003]

§ 4281.33 Restoration of benefits.

(a) *General.* The plan sponsor of a plan that has been amended to reduce benefits under this subpart shall amend the plan to restore those benefits before adopting any amendment increasing benefits under the plan. A plan is not required to make retroactive benefit payments with respect to any benefit that was reduced and subsequently restored in accordance with this section.

(b) *Notice to the PBGC.* The plan sponsor shall notify the PBGC in writing of any restoration under this section. The notice shall include the information specified in § 4281.32 (d)(1) through (d)(4); a statement that a plan amendment restoring benefits has been adopted, the date of adoption, and the effective date of the amendment; and a certification, signed by the plan sponsor or its duly authorized representative, that the amendment has been adopted in accordance with this section.

Subpart D—Benefit Suspensions

§ 4281.41 Benefit suspensions.

If the plan sponsor determines that the plan is or is expected to be insolvent for a plan year, the plan sponsor shall suspend benefits to the extent necessary to reduce the benefits to the greater of the resource benefit level or the level of guaranteed benefits.

§ 4281.42 Retroactive payments.

(a) *Erroneous resource benefit level.* If, by the end of a year in which benefits were suspended under § 4281.41, the plan sponsor determines in writing that the plan's available resources in that year could have supported benefit payments above the resource benefit level determined for that year, the plan sponsor may distribute the excess resources to

each affected participant and beneficiary who received benefit payments that year on a pro rata basis. The amount distributed to each participant under this paragraph may not exceed the amount that, when added to benefit payments already made, brings the total benefit for the plan year up to the total benefit provided under the plan.

(b) *Benefits paid below resource benefit level.* If, by the end of a plan year in which benefits were suspended under § 4281.41, any benefit has not been paid at the resource benefit level, amounts up to the resource benefit level that were unpaid shall be distributed to each affected participant and beneficiary on a pro rata basis to the extent possible, taking into account the plan's total available resources in that year.

§ 4281.43 Notices of insolvency.

(a) *Requirement of notices of insolvency.* A plan sponsor that determines that the plan is, or is expected to be, insolvent for a plan year shall issue notices of insolvency to the PBGC and to plan participants and beneficiaries. Once notices of insolvency have been issued to the PBGC and to plan participants and beneficiaries, no notice of insolvency needs to be issued for subsequent insolvency years. Notices shall be delivered in the manner and within the time prescribed in this section and shall contain the information described in § 4281.44.

(b) *Notices of insolvency—when delivered.* Except as provided in the next sentence, the plan sponsor shall mail or otherwise deliver the notices of insolvency no later than 30 days after the plan sponsor determines that the plan is or may be insolvent. However, the notice to plan participants and beneficiaries in pay status may be delivered concurrently with the first benefit payment made after the determination of insolvency.

(c) *Notices of insolvency—method of issuance to interested parties.* The PBGC applies the rules in subpart B of part 4000 of this chapter to determine permissible methods of issuance of the notice of insolvency. In addition to the methods permitted under subpart B of part 4000, the plan sponsor may notify interested parties, other than participants and beneficiaries who are in pay status when the notice is required to be delivered, by posting the notice at participants' work sites or publishing the notice in a union newsletter or in a newspaper of general circulation in the area or areas where participants reside. Notice to a participant shall be deemed notice to that participant's beneficiary or beneficiaries.

[61 FR 34118, July 1, 1996, as amended at 68 FR 61458, Oct. 28, 2003; 79 FR 30463, May 28, 2014]

§ 4281.44 Contents of notices of insolvency.

(a) *Notice of insolvency to the PBGC.* A notice of insolvency required under § 4281.43(a) to be filed with the PBGC shall contain the following information:

(1) The name of the plan.

(2) The name, address, and telephone number of the plan sponsor and of the plan sponsor's duly authorized representative, if any.

(3) The nine-digit Employer Identification Number (EIN) assigned by the IRS to the plan sponsor and the three-digit Plan Number (PN) assigned by the plan sponsor to the plan, and, if different, the EIN or PN last filed with the PBGC. If no EIN or PN has been assigned, the notice shall so state.

(4) The case number assigned by the PBGC to the filing of the plan's notice of termination pursuant to part 4041A, subparts A and B, of this chapter.

(5) The plan year for which the plan sponsor has determined that the plan is or may be insolvent.

(6) A copy of the plan document currently in effect, *i.e.*, a copy of the last restatement of the plan and all subsequent amendments. However, if a copy of the plan document was submitted to the PBGC with a previous filing, only subsequent plan amendments need be submitted, and the notice shall state when the copy of the plan document was filed.

(7) A copy of the most recent actuarial valuation for the plan (*i.e.*, the most recent report submitted to the plan in connection with a valuation of plan assets and liabilities, which shall be performed in accordance with subpart B of this part). If the actuarial valuation was previously submitted to the PBGC, it may be omitted, and the

notice shall state the date on which the document was filed and that the information is still accurate and complete.

(8) The estimated amount of annual benefit payments under the plan (determined without regard to the insolvency) for the insolvency year.

(9) The estimated amount of the plan's available resources for the insolvency year.

(10) The estimated amount of the annual benefits guaranteed by the PBGC for the insolvency year.

(11) A statement indicating whether the notice of insolvency is the result of an insolvency determination under § 4041A.25 (a) or (b).

(12) A certification, signed by the plan sponsor or its duly authorized representative, that notices of insolvency have been given to all plan participants and beneficiaries in accordance with this part.

(b) *Notice of insolvency to participants and beneficiaries.* A notice of insolvency required under § 4281.43(a) to be issued to plan participants and beneficiaries shall contain the following information:

(1) The name of the plan.

(2) A statement of the plan year for which the plan sponsor has determined that the plan is or may be insolvent.

(3) A statement that benefits above the amount that can be paid from available resources or the level guaranteed by the PBGC, whichever is greater, will be suspended during the insolvency year, with a brief explanation of which benefits are guaranteed by the PBGC.

(4) The name, address, and telephone number of the plan administrator or other person designated by the plan sponsor to answer inquiries concerning benefits.

[61 FR 34118, July 1, 1996, as amended at 79 FR 30463, May 28, 2014]

§ 4281.45 Notices of insolvency benefit level.

(a) *Requirement of notices.* For each insolvency year, the plan sponsor shall issue a notice of insolvency benefit level to the PBGC and to plan participants and beneficiaries in pay status or reasonably expected to enter pay status during the insolvency year. The notices shall be delivered in the manner and within the time prescribed in this section and shall contain the information described in § 4281.46.

(b) *When delivered.* The plan sponsor shall mail or otherwise deliver the notices of insolvency benefit level no later than 60 days before the beginning of the insolvency year. A plan sponsor that determines under § 4041A.25(b) that the plan is or may be insolvent for a plan year shall mail or otherwise deliver the notices of insolvency benefit level by the later of 60 days before the beginning of the insolvency year or 60 days after the date of the plan sponsor's determination under § 4041A.25(b).

(c) *Method of issuance.* The notices of insolvency benefit level shall be delivered to the PBGC and to plan participants and beneficiaries in pay status or reasonably expected to enter pay status during the insolvency year. The PBGC applies the rules in subpart B of part 4000 of this chapter to determine permissible methods of issuance of the notice of insolvency benefit levels to interested parties.

[61 FR 34118, July 1, 1996, as amended at 68 FR 61458, Oct. 28, 2003]

§ 4281.46 Contents of notices of insolvency benefit level.

(a) *Notice to the PBGC.* A notice of insolvency benefit level required by § 4281.45(a) to be filed with the PBGC shall contain the information specified in § 4281.44(a)(1) through (4) and (a)(6) through (10) and:

(1) The insolvency year for which the notice is being filed.

(2) The amount of financial assistance, if any, requested from the PBGC. (When financial assistance is requested, the plan sponsor shall submit an application in accordance with § 4281.47.)

(3) A statement indicating whether the notice of insolvency benefit level is the result of an insolvency determination under § 4041A.25(a) or (b).

(4) A certification, signed by the plan sponsor or its duly authorized representative, that a notice of insolvency benefit level has been sent to all plan participants and beneficiaries in pay status or reasonably expected to enter pay status during the insolvency year, in accordance with this part.

(b) *Notice to participants in or entering pay status.* A notice of insolvency benefit level required by §4281.45(a) to be delivered to plan participants and beneficiaries in pay status or reasonably expected to enter pay status during the insolvency year for which the notice is given, shall contain the following information:

(1) The name of the plan.

(2) The insolvency year for which the notice is being sent.

(3) The monthly benefit that the participant or beneficiary may expect to receive during the insolvency year.

(4) A statement that in subsequent plan years, depending on the plan's available resources, this benefit level may be increased or decreased but not below the level guaranteed by the PBGC, and that the participant or beneficiary will be notified in advance of the new benefit level if it is less than the participant's full nonforfeitable benefit under the plan.

(5) The amount of the participant's or beneficiary's monthly nonforfeitable benefit under the plan.

(6) The amount of the participant's or beneficiary's monthly benefit that is guaranteed by the PBGC.

(7) The name, address, and telephone number of the plan administrator or other person designated by the plan sponsor to answer inquiries concerning benefits.

[61 FR 34118, July 1, 1996, as amended at 79 FR 30463, May 28, 2014]

§4281.47 Application for financial assistance.

(a) *General.* If the plan sponsor determines that the plan's resource benefit level for an insolvency year is below the level of benefits guaranteed by PBGC or that the plan will be unable to pay guaranteed benefits when due for any month during the year, the plan sponsor shall apply to the PBGC for financial assistance pursuant to section 4261 of ERISA. The application shall be filed within the time prescribed in paragraph (b) of this section. When the resource benefit level is below the guarantee level, the application shall contain the information set forth in paragraph (c) of this section. When the plan is unable to pay guaranteed benefits for any month, the application shall contain the information set forth in paragraph (d) of this section.

(b) *When to apply.* When the plan sponsor determines a resource benefit level that is less than guaranteed benefits, it shall apply for financial assistance at the same time that it submits its notice of insolvency benefit level pursuant to §4281.45. When the plan sponsor determines an inability to pay guaranteed benefits for any month, it shall apply for financial assistance within 15 days after making that determination.

(c) *Contents of application—resource benefit level below level of guaranteed benefits.* A plan sponsor applying for financial assistance because the plan's resource benefit level is below the level of guaranteed benefits shall file an application that includes the information specified in §4281.44 (a)(1) through (a)(4) and:

(1) The insolvency year for which the application is being filed.

(2) A participant data schedule showing each participant and beneficiary in pay status or reasonably expected to enter pay status during the year for which financial assistance is requested, listing for each—

(i) Name;

(ii) Sex;

(iii) Date of birth;

(iv) Credited service;

(v) Vested accrued monthly benefit;

(vi) Monthly benefit guaranteed by PBGC;

(vii) Benefit commencement date; and

(viii) Type of benefit.

(d) *Contents of application—unable to pay guaranteed benefits for any month.* A plan sponsor applying for financial assistance because the plan is unable to pay guaranteed benefits for any month shall file an application that includes the data described in §4281.44 (a)(1) through (a)(5), the month for which financial assistance is requested, and the plan's available resources and guaranteed benefits payable in that month. The participant data schedule described in paragraph (c)(2) of this section shall be submitted upon the request of the PBGC.

(e) *Additional information.* The PBGC may request any additional information that it needs to calculate or verify the amount of financial assistance necessary as part of the conditions of granting financial assistance pursuant to section 4261 of ERISA.

[61 FR 34118, July 1, 1996, as amended at 79 FR 30463, May 28, 2014]

SUBCHAPTER K—MULTIEMPLOYER ENFORCEMENT PROVISIONS

PART 4302—PENALTIES FOR FAILURE TO PROVIDE CERTAIN MULTIEMPLOYER PLAN NOTICES

Sec.
4302.1 Purpose and scope.
4302.2 Definitions.
4302.3 Penalty amount.

AUTHORITY: 28 U.S.C. 2461 note, as amended by sec. 31001(s)(1), Pub.L. 104–134, 110 Stat. 1321–373; 29 U.S.C. 1302(b)(3), 1452.

SOURCE: 62 FR 36995, July 10, 1997, unless otherwise noted.

§ 4302.1 Purpose and scope.

This part specifies the maximum daily amount of penalties for which a person may be liable to the PBGC under ERISA section 4302 for certain failures to provide multiemployer plan notices, as such amount has been adjusted to account for inflation pursuant to the Federal Civil Monetary Penalty Inflation Adjustment Act of 1990, as amended by the Debt Collection Improvement Act of 1996.

§ 4302.2 Definitions.

The following terms are defined in § 4001.2 of this chapter: ERISA, multiemployer plan, and PBGC.

§ 4302.3 Penalty amount.

The maximum daily amount of the penalty under section 4302 of ERISA shall be $110.

SUBCHAPTER L—INTERNAL AND ADMINISTRATIVE RULES AND PROCEDURES

PART 4901—EXAMINATION AND COPYING OF PENSION BENEFIT GUARANTY CORPORATION RECORDS

Subpart A—General

Sec.
4901.1 Purpose and scope.
4901.2 Definitions.
4901.3 Disclosure facilities.
4901.4 Information maintained in public reference room.
4901.5 Disclosure of other information.
4901.6 Filing rules; computation of time.

Subpart B—Procedure for Formal Requests

4901.11 Submittal of requests for access to records.
4901.12 Description of information requested.
4901.13 Receipt by agency of request.
4901.14 Action on request.
4901.15 Appeals from denial of requests.
4901.16 Extensions of time.
4901.17 Exhaustion of administrative remedies.

Subpart C—Restrictions on Disclosure

4901.21 Restrictions in general.
4901.22 Partial disclosure.
4901.23 Record of concern to more than one agency.
4901.24 Special rules for trade secrets and confidential commercial or financial information submitted to the PBGC.

Subpart D—Fees

4901.31 Charges for services.
4901.32 Fee schedule.
4901.33 Payment of fees.
4901.34 Waiver or reduction of charges.

AUTHORITY: 5 U.S.C. 552, 29 U.S.C. 1302(b)(3), EO 12600, 52 FR 23781, 3 CFR, 1987 Comp., p. 235.

SOURCE: 61 FR 34123, July 1, 1996, unless otherwise noted.

Subpart A—General

§ 4901.1 Purpose and scope.

This part contains the general rules of the PBGC implementing the Freedom of Information Act. This part sets forth generally the categories of records accessible to the public, the types of records subject to prohibitions or restrictions on disclosure, and the procedure whereby members of the public may obtain access to and inspect and copy information from records in the custody of the PBGC.

§ 4901.2 Definitions.

In addition to terminology in part 4001 of this chapter, as used in this part—

Agency, *person*, *party*, *rule*, *rulemaking*, *order*, and *adjudication* have the meanings attributed to these terms by the definitions in 5 U.S.C. 551, except where the context demonstrates that a different meaning is intended, and except that for purposes of the Freedom of Information Act the term agency as defined in 5 U.S.C. 551 includes any executive department, military department, Government corporation, Government controlled corporation, or other establishment in the executive branch of the Government (including the Executive Office of the President) or any independent regulatory agency.

FOIA means the Freedom of Information Act, as amended (5 U.S.C. 552).

Working day means any weekday excepting Federal holidays.

[61 FR 34123, July 1, 1996, as amended at 74 FR 27081, June 8, 2009]

§ 4901.3 Disclosure facilities.

(a) *Public reference room*. The PBGC will maintain a public reference room in its offices located at 1200 K Street NW., Washington, DC 20005–4026, wherein persons may inspect and copy all records made available for such purposes under this part.

(b) *No withdrawal of records*. No person may remove any record made available for inspection or copying under this part from the place where it is made available except with the written consent of the General Counsel of the PBGC.

§ 4901.4 Information maintained in public reference room.

The PBGC shall make available in its public reference room for inspection and copying without formal request—

(a) *Information published in the* FEDERAL REGISTER. Copies of FEDERAL REGISTER documents published by the PBGC, and copies of FEDERAL REGISTER indexes;

(b) *Information in PBGC publications.* Copies of informational material, such as press releases, pamphlets, and other material ordinarily made available to the public without cost as part of a public information program;

(c) *Rulemaking proceedings.* All papers and documents made a part of the official record in administrative proceedings conducted by the PBGC in connection with the issuance, amendment, or revocation of rules and regulations or determinations having general applicability or legal effect with respect to members of the public or a class thereof (with a register being kept to identify the persons who inspect the records and the times at which they do so);

(d) Except to the extent that deletion of identifying details is required to prevent a clearly unwarranted invasion of personal privacy (in which case the justification for the deletion shall be fully explained in writing)—

(1) *Adjudication proceedings.* Final opinions, orders, and (except to the extent that an exemption provided by FOIA must be asserted in the public interest to prevent a clearly unwarranted invasion of personal privacy or violation of law or to ensure the proper discharge of the functions of the PBGC) other papers and documents made a part of the official record in adjudication proceedings conducted by the PBGC,

(2) *Policy statements and interpretations.* Statements of policy and interpretations affecting a member of the public which have been adopted by the PBGC and which have not been published in the FEDERAL REGISTER, and

(3) *Staff manuals and instructions.* Administrative staff manuals and instructions to staff issued by the PBGC that affect any member of the public, and

(e) *Indexes to certain records.* Current indexes (updated at least quarterly) identifying materials described in paragraph (a)(2) of FOIA and paragraph (d) of this section.

§ 4901.5 Disclosure of other information.

(a) *In general.* Upon the request of any person submitted in accordance with subpart B of this part, the disclosure officer shall make any document (or portion thereof) from the records of the PBGC in the custody of any official of the PBGC available for inspection and copying unless exempt from disclosure under the provisions of subsection (b) of FOIA and subpart C of this part. The subpart B procedures must be used for records that are not made available in the PBGC's public reference room under § 4901.4 and may be used for records that are available in the public reference room. Records that could be produced only by manipulation of existing information (such as computer analyses of existing data), thus creating information not previously in being, are not records of the PBGC and are not required to be furnished under FOIA.

(b) *Discretionary disclosure.* Notwithstanding the applicability of an exemption under subsection (b) of FOIA and subpart C of this part (other than an exemption under paragraph (b)(1) or (b)(3) of FOIA and § 4901.21 (a)(2) and (a)(3)), the disclosure officer may (subject to 18 U.S.C. 1905 and § 4901.21(a)(1)) make any document (or portion thereof) from the records of the PBGC available for inspection and copying if the disclosure officer determines that disclosure furthers the public interest and does not impede the discharge of any of the functions of the PBGC.

§ 4901.6 Filing rules; computation of time.

(a) *Filing rules*—(1) *Where to file.* See § 4000.4 of this chapter for information on where to file a submission under this part with the PBGC.

(2) *Method of filing.* The PBGC applies the rules in subpart A of part 4000 of this chapter to determine permissible methods of filing with the PBGC under this part.

(3) *Date of filing.* The PBGC applies the rules in subpart C of part 4000 of this chapter to determine the date that

a submission under this part was filed with the PBGC.

(b) *Computation of time.* The PBGC applies the rules in subpart D of part 4000 of this chapter to compute any time period under this part.

[68 FR 61358, Oct. 28, 2003]

Subpart B—Procedure for Formal Requests

§ 4901.11 Submittal of requests for access to records.

A request to inspect or copy any record subject to this subpart shall be submitted to the Disclosure Officer, Pension Benefit Guaranty Corporation. Such a request may be sent to the Disclosure Officer or made in person between the hours of 9 a.m. and 4 p.m. on any working day in the Office of the General Counsel, PBGC, 1200 K Street, NW., Suite 11101, Washington, DC 20005–4026. To expedite processing, the request should be prominently identified as a ''FOIA request.''

[68 FR 61358, Oct. 28, 2003, as amended at 74 FR 27081, June 8, 2009]

§ 4901.12 Description of information requested.

(a) *In general.* Each request should reasonably describe the record or records sought in sufficient detail to permit identification and location with a reasonable amount of effort. So far as practicable, the request should specify the subject matter of the record, the place where and date or approximate date when made, the person or office that made it, and any other pertinent identifying details.

(b) *Deficient descriptions.* If the description is insufficient to enable a professional employee familiar with the subject area of the request to locate the record with a reasonable amount of effort, the disclosure officer will notify the requester and, to the extent possible, indicate the additional information required. Every reasonable effort shall be made to assist a requester in the identification and location of the record or records sought. Records will not be withheld merely because it is difficult to find them.

(c) *Requests for categories of records.* Requests calling for all records falling within a reasonably specific category will be regarded as reasonably described within the meaning of this section and paragraph (a)(3) of FOIA if the PBGC is reasonably able to determine which records come within the request and to search for and collect them without unduly interfering with PBGC operations. If PBGC operations would be unduly disrupted, the disclosure officer shall promptly notify the requester and provide an opportunity to confer in an attempt to reduce the request to manageable proportions.

§ 4901.13 Receipt by agency of request.

The disclosure officer shall note the date and time of receipt on each request for access to records. A request shall be deemed received and the period within which action on the request shall be taken, as set forth in § 4901.14 of this part, shall begin on the next business day following such date, except that a request shall be deemed received only if and when the PBGC receives—

(a) A sufficient description under § 4901.12;

(b) Payment or assurance of payment if required under § 4901.33(b); and

(c) The requester's consent to pay substantial search, review, and/or duplication charges under subpart D of this part if the PBGC determines that such charges may be substantial and so notifies the requester. Consent may be in the form of a statement that costs under subpart D will be acceptable either in any amount or up to a specified amount. To avoid possible delay, a requester may include such a statement in a request.

§ 4901.14 Action on request.

(a) *Time for action.* Promptly and in any event within 10 working days after receipt of a disclosure request (subject to extension under § 4901.16), the disclosure officer shall take action with respect to each requested item (or portion of an item) under either paragraph (b), (c), or (d) of this section.

(b) *Request granted.* If the disclosure officer determines that the request should be granted, the requester shall be so advised and the records shall be promptly made available to the requester.

(c) *Request denied.* If the disclosure officer determines that the request should be denied, the requester shall be so advised in writing with a brief statement of the reasons for the denial, including a reference to the specific exemption(s) authorizing the denial and an explanation of how each such exemption applies to the matter withheld. The denial shall also include the name and title or position of the person(s) responsible for the denial and outline the appeal procedure available.

(d) *Records not promptly located.* As to records that are not located in time to make an informed determination, the disclosure officer may deny the request and so advise the requester in writing with an explanation of the circumstances. The denial shall also include the name and title or position of the person(s) responsible for the denial, outline the appeal procedure available, and advise the requester that the search or examination will be continued and that the denial may be withdrawn, modified, or confirmed when processing of the request is completed.

§4901.15 Appeals from denial of requests.

(a) *Submittal of appeals.* If a disclosure request is denied in whole or in part by the disclosure officer, the requester may file a written appeal within 30 days from the date of the denial or, if later (in the case of a partial denial), 30 days from the date the requester receives the disclosed material. The appeal shall state the grounds for appeal and any supporting statements or arguments, and shall be addressed to the General Counsel, Pension Benefit Guaranty Corporation. See §4000.4 of this chapter for information on where to file. To expedite processing, the words ''FOIA appeal'' should appear prominently on the request.

(b) *Receipt and consideration of appeal.* The General Counsel shall note the date and time of receipt on each appeal and notify the requester thereof. Promptly and in any event within 20 working days after receipt of an appeal (subject to extension under §4901.16), the General Counsel shall issue a decision on the appeal.

(1) The General Counsel may determine de novo whether the denial of disclosure was in accordance with FOIA and this part.

(2) If the denial appealed from was under §4901.14(d), the General Counsel shall consider any supplementary determination by the disclosure officer in deciding the appeal.

(3) Unless otherwise ordered by the court, the General Counsel may act on an appeal notwithstanding the pendency of an action for judicial relief in the same matter and, if no appeal has been filed, may treat such an action as the filing of an appeal.

(c) *Decision on appeal.* As to each item (or portion of an item) whose nondisclosure is appealed, the General Counsel shall either—

(1) Grant the appeal and so advise the requester in writing, in which case the records with respect to which the appeal is granted shall be promptly made available to the requester; or

(2) Deny the appeal and so advise the requester in writing with a brief statement of the reasons for the denial, including a reference to the specific exemption(s) authorizing the denial, an explanation of how each such exemption applies to the matter withheld, and notice of the provisions for judicial review in paragraph (a)(4) of FOIA. The General Counsel's decision shall be the final action of the PBGC with respect to the request.

(d) *Records of appeals.* Copies of both grants and denials of appeals shall be collected in one file available in the PBGC's public reference room under §4901.4(d)(1) and indexed under §4901.4(e).

[61 FR 34123, July 1, 1996, as amended at 68 FR 61358, Oct. 28, 2003]

§4901.16 Extensions of time.

In unusual circumstances (as described in subparagraph (a)(6)(B) of FOIA), the time to respond to a disclosure request under §4901.14(a) or an appeal under §4901.15(b) may be extended as reasonably necessary to process the request or appeal. The disclosure officer (with the prior approval of the General Counsel) or the General Counsel, as appropriate, shall notify the requester in writing within the original time period of the reasons for the extension and the date when a response is

expected to be sent. The maximum extension for responding to a disclosure request shall be 10 working days, and the maximum extension for responding to an appeal shall be 10 working days minus the amount of any extension on the request to which the appeal relates.

§ 4901.17 Exhaustion of administrative remedies.

If the disclosure officer fails to make a determination to grant or deny access to requested records, or the General Counsel does not make a decision on appeal from a denial of access to PBGC records, within the time prescribed (including any extension) for making such determination or decision, the requester's administrative remedies shall be deemed exhausted and the requester may apply for judicial relief under FOIA. However, since a court may allow the PBGC additional time to act as provided in FOIA, processing of the request or appeal shall continue and the requester shall be so advised.

Subpart C—Restrictions on Disclosure

§ 4901.21 Restrictions in general.

(a) *Records not disclosable.* Records shall not be disclosed to the extent prohibited by—

(1) 18 U.S.C. 1905, dealing in general with commercial and financial information;

(2) Paragraph (b)(1) of FOIA, dealing in general with matters of national defense and foreign policy; or

(3) Paragraph (b)(3) of FOIA, dealing in general with matters specifically exempted from disclosure by statute, including information or documentary material submitted to the PBGC pursuant to sections 4010 and 4043 of ERISA.

(b) *Records disclosure of which may be refused.* Records need not (but may, as provided in § 4901.5(b)) be disclosed to the extent provided by—

(1) Paragraph (b)(2) of FOIA, dealing in general with internal agency personnel rules and practices;

(2) Paragraph (b)(4) of FOIA, dealing in general with trade secrets and commercial and financial information;

(3) Paragraph (b)(5) of FOIA, dealing in general with inter-agency and intra-agency memoranda and letters;

(4) Paragraph (b)(6) of FOIA, dealing in general with personnel, medical, and similar files;

(5) Paragraph (b)(7) of FOIA, dealing in general with records or information compiled for law enforcement purposes;

(6) Paragraph (b)(8) of FOIA, dealing in general with reports on financial institutions; or

(7) Paragraph (b)(9) of FOIA, dealing in general with information about wells.

§ 4901.22 Partial disclosure.

If an otherwise disclosable record contains some material that is protected from disclosure, the record shall not for that reason be withheld from disclosure if deletion of the protected material is feasible. This principle shall be applied in particular to identifying details the disclosure of which would constitute an unwarranted invasion of personal privacy.

§ 4901.23 Record of concern to more than one agency.

If the release of a record in the custody of the PBGC would be of concern not only to the PBGC but also to another Federal agency, the record will be made available by the PBGC only if its interest in the record is the primary interest and only after coordination with the other interested agency. If the interest of the PBGC in the record is not primary, the request will be transferred promptly to the agency having the primary interest, and the requester will be so notified.

§ 4901.24 Special rules for trade secrets and confidential commercial or financial information submitted to the PBGC.

(a) *Application.* To the extent permitted by law, this section applies to a request for disclosure of a record that contains information that has been designated by the submitter in good faith in accordance with paragraph (b) of this section or a record that the PBGC has reason to believe contains such information, unless—

(1) Access to the information is denied;

(2) The information has been published or officially made available to the public;

(3) Disclosure of the information is required by law other than FOIA; or

(4) The designation under paragraph (b) of this section appears obviously frivolous, except that in such a case the PBGC will notify the submitter in writing of a determination to disclose the information within a reasonable time before the disclosure date (which shall be specified in the notice).

(b) *Designation by submitter*. To designate information as being subject to this section, the submitter shall, at the time of submission or by a reasonable time thereafter, assert that information being submitted is confidential business information and designate, with appropriate markings, the portion(s) of the submission to which the assertion applies. Any designation under this paragraph shall expire 10 years after the date of submission unless a longer designation period is requested and reasonable justification is provided therefor.

(c) *Notification to submitter of disclosure request*. When disclosure of information subject to this section may be made, the disclosure officer or (where disclosure may be made in response to an appeal) the General Counsel shall promptly notify the submitter, describing (or providing a copy of) the information that may be disclosed, and afford the submitter a reasonable period of time to object in writing to the requested disclosure. (The notification to the submitter may be oral or written; if oral, it will be confirmed in writing.) When a submitter is notified under this paragraph, the requester shall be notified that the submitter is being afforded an opportunity to object to disclosure.

(d) *Objection of submitter*. A submitter's statement objecting to disclosure should specify all grounds relied upon for opposing disclosure of any portion(s) of the information under subsection (b) of FOIA and, with respect to the exemption in paragraph (b)(4) of FOIA, demonstrate why the information is a trade secret or is commercial or financial information that is privileged or confidential. Facts asserted should be certified or otherwise supported. (Information provided pursuant to this paragraph may itself be subject to disclosure under FOIA.) Any timely objection of a submitter under this paragraph shall be carefully considered in determining whether to grant a disclosure request or appeal.

(e) *Notification to submitter of decision to disclose*. If the disclosure officer or (where disclosure is in response to an appeal) the General Counsel decides to disclose information subject to this section despite the submitter's objections, the disclosure officer (or General Counsel) shall give the submitter written notice, explaining briefly why the information is to be disclosed despite those objections, describing the information to be disclosed, and specifying the date when the information will be disclosed to the requester. The notification shall, to the extent permitted by law, be provided a reasonable number of days before the disclosure date so specified, and a copy shall be provided to the requester.

(f) *Notification to submitter of action to compel disclosure*. The disclosure officer or the General Counsel shall promptly notify the submitter if a requester brings suit seeking to compel disclosure.

Subpart D—Fees

§4901.31 Charges for services.

(a) *Generally*. Pursuant to the provisions of FOIA, as amended, charges will be assessed to cover the direct costs of searching for, reviewing, and/or duplicating records requested under FOIA from the PBGC, except where the charges are limited or waived under paragraph (b) or (d) of this section, according to the fee schedule in §4901.32 of this part. No charge will be assessed if the costs of routine collection and processing of the fee would be equal to or greater than the fee itself.

(1) *Direct costs* means those expenditures which the PBGC actually incurs in searching for and duplicating (and in the case of commercial requesters, reviewing) documents to respond to a request under FOIA and this part. Direct costs include, for example, the salary of the employee performing work (*i.e.*, the basic rate of pay plus benefits) or

an established average pay for a homogeneous class of personnel (e.g., all administrative/clerical or all professional/executive), and the cost of operating duplicating machinery. Not included in direct costs are overhead expenses such as costs of space, and heating or lighting the facility in which the records are stored.

(2) *Search* means all time spent looking for material that is responsive to a request under FOIA and this part, including page-by-page or line-by-line identification of materials within a document, if required, and may be done manually or by computer using existing programming. ''Search should be distinguished from ''review'' which is defined in paragraph (a)(3) of this section.

(3) *Review* means the process of examining documents located in response to a request under FOIA and this part to determine whether any portion of any document located is permitted or required to be withheld. It also includes processing any documents for disclosure, e.g., doing all that is necessary to excise them and otherwise prepare them for release. Review does not include time spent resolving general legal or policy issues regarding the application of exemptions.

(4) *Duplication* means the process of making a copy of a document necessary to respond to a request under FOIA and this part, in a form that is reasonably usable by the requester. Copies can take the form of paper copy, microform, audio-visual materials, or machine readable documentation (e.g., magnetic tape or disk), among others.

(b) *Categories of requesters.* Requesters who seek access to records under FOIA and this part are divided into four categories: commercial use requesters, educational and noncommercial scientific institutions, representatives of the news media, and all other requesters. The PBGC will determine the category of a requester and charge fees according to the following rules.

(1) *Commercial use requesters.* When records are requested for commercial use, the PBGC will assess charges, as provided in this subpart, for the full direct costs of searching for, reviewing for release, and duplicating the records sought. Fees for search and review may be charged even if the record searched for is not found or if, after it is found, it is determined that the request to inspect it may be denied under the provisions of subsection (b) of FOIA and this part.

(i) *''Commercial use'' request* means a request from or on behalf of one who seeks information for a use or purpose that furthers the commercial, trade, or profit interests of the requester or the person on whose behalf the request is made.

(ii) In determining whether a request properly belongs in this category, the PBGC will look to the use to which a requester will put the documents requested. Moreover, where the PBGC has reasonable cause to doubt the use to which a requester will put the records sought, or where that use is not clear from the request itself, the PBGC will require the requester to provide clarification before assigning the request to this category.

(2) *Educational and noncommercial scientific institution requesters.* When records are requested by an educational or noncommercial scientific institution, the PBGC will assess charges, as provided in this subpart, for the full direct cost of duplication only, excluding charges for the first 100 pages.

(i) *Educational institution* means a preschool, a public or private elementary or secondary school, an institution of graduate higher education, an institution of undergraduate higher education, an institution of professional education, and an institution of vocational education, which operates a program or programs of scholarly research.

(ii) *Noncommercial scientific institution* means an institution that is not operated on a ''commercial'' basis as that term is defined in paragraph (b)(1)(i) of this section, and which is operated solely for the purpose of conducting scientific research the results of which are not intended to promote any particular product or industry.

(iii) To be eligible for inclusion in this category, requesters must show that the request is being made as authorized by and under the auspices of a qualifying institution and that the

records are not sought for a commercial use, but are sought in furtherance of scholarly (if the request is from an educational institution) or scientific (if the request is from a noncommercial scientific institution) research.

(3) *Requesters who are representatives of the news media.* When records are requested by representatives of the news media, the PBGC will assess charges, as provided in this subpart, for the full direct cost of duplication only, excluding charges for the first 100 pages.

(i) *Representative of the news media* means any person actively gathering news for an entity that is organized and operated to publish or broadcast news to the public. The term *news* means information that is about current events or that would be of current interest to the public. Examples of news media entities include television or radio stations broadcasting to the public at large, and publishers of periodicals (but only in those instances when they can qualify as disseminators of ''news'') who make their products available for purchase or subscription by the general public. These examples are not intended to be all-inclusive. ''Freelance'' journalists may be regarded as working for a news organization if they can demonstrate a solid basis for expecting publication through that organization, even though not actually employed by it.

(ii) To be eligible for inclusion in this category, the request must not be made for a commercial use. A request for records supporting the news dissemination function of the requester who is a representative of the news media shall not be considered to be a request that is for a commercial use.

(4) *All other requesters.* When records are requested by requesters who do not fit into any of the categories in paragraphs (b)(1) through (b)(3) of this section, the PBGC will assess charges, as provided in this subpart, for the full direct cost of searching for and duplicating the records sought, with the exceptions that there will be no charge for the first 100 pages of duplication and the first two hours of manual search time (or its cost equivalent in computer search time). Notwithstanding the preceding sentence, there will be no charge for search time in the event of requests under the Privacy Act of 1974 from subjects of records filed in the PBGC's systems of records for the disclosure of records about themselves. Search fees, where applicable, may be charged even if the record searched for is not found.

(c) *Aggregation of requests.* If the PBGC reasonably believes that a requester or group of requesters is attempting to break a request down into a series of requests for the purpose of evading the assessment of fees, the PBGC will aggregate any such requests and charge accordingly. In no case will the PBGC aggregate multiple requests on unrelated subjects from one requester.

(d) *Waiver or reduction of charges.* Circumstances under which searching, review, and duplication facilities or services may be made available to the requester without charge or at a reduced charge are set forth in § 4901.34 of this part.

§ 4901.32 Fee schedule.

(a) *Charges for searching and review of records.* Charges applicable under this subpart to the search for and review of records will be made according to the following fee schedule:

(1) *Search and review time.* (i) Ordinary search and review by custodial or clerical personnel, $1.75 for each one-quarter hour or fraction thereof of employee worktime required to locate or obtain the records to be searched and to make the necessary review; and (ii) search or review requiring services of professional or supervisory personnel to locate or review requested records, $4.00 for each one-quarter hour or fraction thereof of professional or supervisory personnel worktime.

(2) *Additional search costs.* If the search for a requested record requires transportation of the searcher to the location of the records or transportation of the records to the searcher, at a cost in excess of $5.00, actual transportation costs will be added to the search time cost.

(3) *Search in computerized records.* Charges for information that is available in whole or in part in computerized form will include the cost of operating the central processing unit (CPU) for that portion of operating time that

is directly attributable to searching for records responsive to the request, personnel salaries apportionable to the search, and tape or printout production or an established agency-wide average rate for CPU operating costs and operator/programmer salaries involved in FOIA searches. Charges will be computed at the rates prescribed in paragraphs (a) and (b) of this section.

(b) *Charges for duplication of records.* Charges applicable under this subpart for obtaining requested copies of records made available for inspection will be made according to the following fee schedule and subject to the following conditions.

(1) *Standard copying fee.* $0.15 for each page of record copies furnished. This standard fee is also applicable to the furnishing of copies of available computer printouts as stated in paragraph (a)(3) of this section.

(2) *Voluminous material.* If the volume of page copy desired by the requester is such that the reproduction charge at the standard page rate would be in excess of $50, the person desiring reproduction may request a special rate quotation from the PBGC.

(3) *Limit of service.* Not more than 10 copies of any document will be furnished.

(4) *Manual copying by requester.* No charge will be made for manual copying by the requesting party of any document made available for inspection under the provisions of this part. The PBGC shall provide facilities for such copying without charge at reasonable times during normal working hours.

(5) *Indexes.* Pursuant to paragraph (a)(2) of FOIA copies of indexes or supplements thereto which are maintained as therein provided but which have not been published will be provided on request at a cost not to exceed the direct cost of duplication.

(c) *Other charges.* The scheduled fees, set forth in paragraphs (a) and (b) of this section, for furnishing records made available for inspection and duplication represent the direct costs of furnishing the copies at the place of duplication. Upon request, single copies of the records will be mailed, postage prepaid, free of charge. Actual costs of transmitting records by special methods such as registered, certified, or special delivery mail or messenger, and of special handling or packaging, if required, will be charged in addition to the scheduled fees.

§ 4901.33 Payment of fees.

(a) *Medium of payment.* Payment of the applicable fees as provided in this subsection shall be made in cash, by U.S. postal money order, or by check payable to the PBGC. Postage stamps will not be accepted in lieu of cash, checks, or money orders as payment for fees specified in the schedule. Cash should not be sent by mail.

(b) *Advance payment or assurance of payment.* Payment or assurance of payment before work is begun or continued on a request may be required under the following rules.

(1) Where the PBGC estimates or determines that charges allowable under the rules in this subpart are likely to exceed $250, the PBGC may require advance payment of the entire fee or assurance of payment, as follows:

(i) Where the requester has a history of prompt payment of fees under this part, the PBGC will notify the requester of the likely cost and obtain satisfactory assurance of full payment; or

(ii) Where the requester has no history of payment for requests made pursuant to FOIA and this part, the PBGC may require the requester to make an advance payment of an amount up to the full estimated charges.

(2) Where the requester has previously failed to pay a fee charged in a timely fashion (*i.e.*, within 30 days of the date of the billing), the PBGC may require the requester to pay the full amount owed plus any applicable interest as provided in paragraph (c) of this section (or demonstrate that he has, in fact, paid the fee) and to make an advance payment of the full amount of the estimated fee.

(c) *Late payment interest charges.* The PBGC may assess late payment interest charges on any amounts unpaid by the 31st day after the date a bill is sent to a requester. Interest will be assessed at the rate prescribed in 31 U.S.C. 3717 and will accrue from the date the bill is sent.

[61 FR 34123, July 1, 1996, as amended at 68 FR 61358, Oct. 28, 2003]

§ 4901.34 Waiver or reduction of charges.

(a) The disclosure officer may waive or reduce fees otherwise applicable under this subpart when disclosure of the information is in the public interest because it is likely to contribute significantly to public understanding of the operations or activities of the government and is not primarily in the commercial interest of the requester. A fee waiver request shall set forth full and complete information upon which the request for waiver is based.

(b) The disclosure officer may reduce or waive fees applicable under this subpart when the requester has demonstrated his inability to pay such fees.

PART 4902—DISCLOSURE AND AMENDMENT OF RECORDS PERTAINING TO INDIVIDUALS UNDER THE PRIVACY ACT

Sec.

4902.1 Purpose and scope.
4902.2 Definitions.
4902.3 Procedures for determining existence of and requesting access to records.
4902.4 Disclosure of record to an individual.
4902.5 Procedures for requesting amendment of a record.
4902.6 Action on request for amendment of a record.
4902.7 Appeal of a denial of a request for amendment of a record.
4902.8 Fees.
4902.9 Privacy Act provisions for which PBGC claims an exemption.
4902.10 Specific exemption: Personnel security investigation records.
4902.11 Specific exemptions: Office of Inspector General investigative file system.
4902.12 Filing rules; computation of time.

AUTHORITY: 5 U.S.C. 552a.

SOURCE: 61 FR 34128, July 1, 1996, unless otherwise noted.

§ 4902.1 Purpose and Scope.

(a) *Procedures.* Sections 4902.3 through 4902.7 establish procedures under which—

(1) An individual may—

(i) Determine whether PBGC maintains any system of records that contains a record pertaining to the individual;

(ii) Obtain access to the individual's record upon request;

(iii) Make a request to amend the individual's record; and

(iv) Appeal a denial of a request to amend the individual's record; and

(2) PBGC will make an initial determination of a request to amend an individual's record.

(b) *Fees.* Section 4902.8 prescribes the fees for making copies of an individual's record.

(c) *Privacy Act provisions.* Section 4902.9 summarizes the Privacy Act (5 U.S.C. 552a) provisions for which PBGC claims an exemption for certain systems of records.

(d) *Exemptions.* Sections 4902.10 through 4902.11 set forth those systems of records that are exempted from certain disclosure and other provisions of the Privacy Act, and the reasons for the exemptions.

[74 FR 27081, June 8, 2009]

§ 4902.2 Definitions.

In addition to terminology in part 4001 of this chapter, as used in this part:

Record means any item, collection, or grouping of information about an individual that is maintained by an agency, including, but not limited to, his or her education, financial transactions, medical history, and criminal or employment history and that contains his or her name, or the identifying number, symbol, or other identifying particular assigned to the individual, such as a finger or voice print or a photograph.

System of records means a group of any records under the control of any agency from which information is retrieved by the name of the individual or by some identifying number, symbol, or other identifying particular assigned to the individual.

Working day means any weekday excepting Federal holidays.

[61 FR 34128, July 1, 1996, as amended at 74 FR 27081, June 8, 2009]

§ 4902.3 Procedures for determining existence of and requesting access to records.

(a) Any individual may submit a request to the Disclosure Officer, Pension Benefit Guaranty Corporation, for the

purpose of learning whether a system of records maintained by the PBGC contains any record pertaining to the requestor or obtaining access to such a record. Such a request may be sent to the Disclosure Officer or made in person between the hours of 9 a.m. and 4 p.m. on any working day. Current information on how to make a request, including the Disclosure Officer's mailing address and location, can be obtained on PBGC's Web site, *http://www.pbgc.gov*.

(b) Each request submitted pursuant to paragraph (a) of this section shall include the name of the system of records to which the request pertains and the requester's full name, home address and date of birth, and shall prominently state the words, ''Privacy Act Request.'' If this information is insufficient to enable the PBGC to identify the record in question, or to determine the identity of the requester (to ensure the privacy of the subject of the record), the disclosure officer shall request such further identifying data as the disclosure officer deems necessary to locate the record or to determine the identity of the requester.

(c) Unless the request is only for notification of the existence of a record and such notification is required under the Freedom of Information Act (5 U.S.C. 552), the requester shall be required to provide verification of his or her identity to the PBGC as set forth in paragraph (c)(1) or (2) of this section, as appropriate.

(1) If the request is made by mail, the requester shall submit a notarized statement establishing his or her identity.

(2) If the request is made in person, the requester shall show identification satisfactory to the disclosure officer, such as a driver's license, employee identification, annuitant identification or Medicare card.

(d) The disclosure officer shall respond to the request in writing within 10 working days after receipt of the request or of such additional information as may be required under paragraph (b) of this section. If a request for access to a record is granted, the response shall state when the record will be made available.

[61 FR 34128, July 1, 1996, as amended at 68 FR 61358, Oct. 28, 2003; 74 FR 27081, June 8, 2009]

§ 4902.4 Disclosure of record to an individual.

(a) When the disclosure officer grants a request for access to records under § 4902.3, such records shall be made available when the requester is advised of the determination or as promptly thereafter as possible. At the requester's option, the record will be made available for the requester's inspection and copying at the PBGC, between the hours of 9 a.m. and 4 p.m. on any working day, or a copy of the record will be mailed to the requester. Current information on where the records may be inspected and copied can be obtained on PBGC's Web site, *http://www.pbgc.gov*.

(b) If the requester desires to be accompanied by another individual during the inspection and/or copying of the record, the requester shall, either when the record is made available or at any earlier time, submit to the disclosure officer a signed statement identifying such other individual and authorizing such other individual to be present during the inspection and/or copying of the record.

[61 FR 34128, July 1, 1996, as amended at 74 FR 27082, June 8, 2009]

§ 4902.5 Procedures for requesting amendment of a record.

(a) Any individual about whom the PBGC maintains a record contained in a system of records may request that the record be amended. Such a request shall be submitted in the same manner described in § 4902.3(a).

(b) Each request submitted under paragraph (a) of this section shall include the information described in § 4902.3(b) and a statement specifying the changes to be made in the record and the justification therefor. The disclosure officer may request further identifying data as described in § 4902.3(b).

(c) An individual who desires assistance in the preparation of a request for amendment of a record shall submit such request for assistance in writing

to the Deputy General Counsel, Pension Benefit Guaranty Corporation. The Deputy General Counsel shall respond to such request as promptly as possible.

[61 FR 34128, July 1, 1996, as amended at 68 FR 61358, Oct. 28, 2003]

§ 4902.6 Action on request for amendment of a record.

(a) Within 20 working days after receipt by the PBGC of a request for amendment of a record under § 4902.5, unless for good cause shown the Director of the PBGC extends such 20-day period, the disclosure officer shall notify the requester in writing whether and to what extent the request shall be granted. To the extent that the request is granted, the disclosure officer shall cause the requested amendment to be made promptly.

(b) When a request for amendment of a record is denied in whole or in part, the denial shall include a statement of the reasons therefor, the procedures for appealing such denial, and a notice that the requester has a right to assistance in preparing an appeal of the denial.

(c) An individual who desires assistance in preparing an appeal of a denial under this section shall submit a request to the Deputy General Counsel, Pension Benefit Guaranty Corporation. The Deputy General Counsel shall respond to the request as promptly as possible, but in no event more than 30 days after receipt.

[61 FR 34128, July 1, 1996, as amended at 68 FR 61359, Oct. 28, 2003; 74 FR 27082, June 8, 2009]

§ 4902.7 Appeal of a denial of a request for amendment of a record.

(a) An appeal from a denial of a request for amendment of a record under § 4902.6 shall be submitted, within 45 days of receipt of the denial, to the General Counsel, Pension Benefit Guaranty Corporation, unless the record subject to such request is one maintained by the Office of the General Counsel, in which event the appeal shall be submitted to the Director or Director's designee, Pension Benefit Guaranty Corporation. The appeal shall state in detail the basis on which it is made and shall clearly state ''Privacy Act Request'' on the first page. In addition, the submission shall clearly state ''Privacy Act Request'' on the envelope (for mail, hand delivery, or commercial delivery), in the subject line (for e-mail), or on the cover sheet (for fax).

(b) Within 30 working days after the receipt of the appeal, unless for good cause shown the Director of the PBGC extends such 30-day period, the General Counsel or, where appropriate, the Director or Director's designee, shall issue a decision in writing granting or denying the appeal in whole or in part. To the extent that the appeal is granted, the General Counsel or, where appropriate, the Director or Director's designee, shall cause the requested amendment to be made promptly. To the extent that the appeal is denied, the decision shall include the reasons for the denial and a notice of the requester's right to submit a brief statement setting forth reasons for disputing the denial of appeal, to seek judicial review of the denial pursuant to 5 U.S.C. 552a(g)(1)(A), and to obtain further information concerning the provisions for judicial review under that section.

(c) An individual whose appeal has been denied in whole or in part may submit a brief summary statement setting forth reasons for disputing such denial. Such statement shall be submitted within 30 days of receipt of the denial of the appeal to the Disclosure Officer. Any such statement shall be made available by the PBGC to anyone to whom the record is subsequently furnished and may also be accompanied, at the discretion of the PBGC, by a brief statement summarizing the PBGC's reasons for refusing to amend the record. The PBGC shall also provide copies of the individual's statement of dispute to all prior recipients of the record with respect to whom an accounting of the disclosure of the record was maintained pursuant to 5 U.S.C. 552a(c)(1).

(d) To request further information concerning the provisions for judicial review, an individual shall submit such

request in writing to the Deputy General Counsel, who shall respond to such request as promptly as possible.

[61 FR 34128, July 1, 1996, as amended at 68 FR 61359, Oct. 28, 2003; 74 FR 27082, June 8, 2009; 74 FR 30212, June 25, 2009]

§ 4902.8 Fees.

When an individual requests a copy of his or her record under § 4902.4, charges for the copying shall be made according to the following fee schedule:

(a) *Standard copying fee.* There shall be a charge of $0.15 per page of record copies furnished. Where the copying fee is less than $1.50, it shall not be assessed.

(b) *Voluminous material.* If the volume of page copy desired by the requester is such that the reproduction charge at the standard page rate would be in excess of $50, the individual desiring reproduction may request a special rate quotation from the PBGC.

(c) *Manual copying by requester.* No charge will be made for manual copying by the requester of any document made available for inspection under § 4902.4. The PBGC shall provide facilities for such copying without charge between the hours of 9 a.m. and 4 p.m. on any working day.

§ 4902.9 Privacy Act provisions for which PBGC claims an exemption.

Subsections 552a(j) and (k) of title 5, U.S.C., authorize PBGC to exempt systems of records meeting certain criteria from various other subsections of section 552a. This section contains a summary of the Privacy Act provisions for which PBGC claims an exemption for the systems of records discussed in this part pursuant to, and to the extent permitted by, subsections 552a(j) and (k):

(a) Subsection (c)(3) of 5 U.S.C. 552a requires an agency to make available to the individual named in the records an accounting of each disclosure of records.

(b) Subsection (c)(4) of 5 U.S.C. 552a requires an agency to inform any person or other agency to which a record has been disclosed of any correction or notation of dispute the agency has made to the record in accordance with subsection (d) of the Privacy Act.

(c) Subsections (d)(1) through (4) of 5 U.S.C. 552a require an agency to permit an individual to gain access to records about the individual, to request amendment of such records, to request a review of an agency decision not to amend such records, and to provide a statement of disagreement about a disputed record to be filed and disclosed with the disputed record.

(d) Subsection (e)(1) of 5 U.S.C. 552a requires an agency to maintain in its records only such information about an individual that is relevant and necessary to accomplish a purpose required by statute or executive order of the President.

(e) Subsection (e)(2) of 5 U.S.C. 552a requires an agency to collect information to the greatest extent practicable directly from the subject individual when the information may result in adverse determinations about an individual's rights, benefits, and privileges under federal programs.

(f) Subsection (e)(3) of 5 U.S.C. 552a requires an agency to inform each person whom it asks to supply information of the authority under which the information is sought, whether disclosure is mandatory or voluntary, the principal purpose(s) for which the information will be used, the routine uses that may be made of the information, and the effects of not providing the information.

(g) Subsection (e)(4)(G) and (H) of 5 U.S.C. 552a requires an agency to publish a FEDERAL REGISTER notice of its procedures whereby an individual can be notified upon request whether the system of records contains information about the individual, how to gain access to any record about the individual contained in the system, and how to contest its content.

(h) Subsection (e)(5) of 5 U.S.C. 552a requires an agency to maintain its records with such accuracy, relevance, timeliness, and completeness as is reasonably necessary to ensure fairness to the individual in making any determination about the individual.

(i) Subsection (e)(8) of 5 U.S.C. 552a requires an agency to make reasonable efforts to serve notice on an individual when any record on such individual is made available to any person under compulsory legal process when such

process becomes a matter of public record.

(j) Subsection (f) of 5 U.S.C. 552a requires an agency to establish procedures whereby an individual can be notified upon request if any system of records named by the individual contains a record pertaining to the individual, obtain access to the record, and request amendment.

(k) Subsection (g) of 5 U.S.C. 552a provides for civil remedies if an agency fails to comply with the access and amendment provisions of subsections (d)(1) and (d)(3), and with other provisions of the Privacy Act, or any rule promulgated thereunder, in such a way as to have an adverse effect on an individual.

[74 FR 27082, June 8, 2009]

§ 4902.10 Specific exemption: Personnel Security Investigation Records.

(a) *Exemption*. Under the authority granted by 5 U.S.C. 552a(k)(5), PBGC hereby exempts the system of records entitled ''PBGC–12, Personnel Security Investigation Records—PBGC'' from the provisions of 5 U.S.C. 552a (c)(3), (d), (e)(1), (e)(4)(G), (H), and (I), and (f), to the extent that the disclosure of such material would reveal the identity of a source who furnished information to PBGC under an express promise of confidentiality or, before September 27, 1975, under an implied promise of confidentiality.

(b) *Reasons for Exemption*. The reasons for asserting this exemption are to insure the gaining of information essential to determining suitability and fitness for PBGC employment or for work for PBGC as a contractor or as an employee of a contractor, access to information, and security clearances, to insure that full and candid disclosures are obtained in making such determinations, to prevent subjects of such determinations from thwarting the completion of such determinations, and to avoid revealing the identities of persons who furnish information to PBGC in confidence.

[74 FR 27082, June 8, 2009]

§ 4902.11 Specific exemptions: Office of Inspector General Investigative File System.

(a) *Criminal Law Enforcement*. (1) *Exemption*. Under the authority granted by 5 U.S.C. 552a(j)(2), PBGC hereby exempts the system of records entitled ''PBGC–17, Office of Inspector General Investigative File System—PBGC'' from the provisions of 5 U.S.C. 552a (c)(3), (c)(4), (d)(1) through (4), (e)(1) through (3), (e)(4)(G) and (H), (e)(5), (e)(8), (f), and (g) because the system contains information pertaining to the enforcement of criminal laws.

(2) *Reasons for exemption*. The reasons for asserting this exemption are:

(i) Disclosure to the individual named in the record pursuant to subsections (c)(3), (c)(4), or (d)(1) through (4) could seriously impede or compromise the investigation by alerting the target(s), subjecting a potential witness or witnesses to intimidation or improper influence, and leading to destruction of evidence.

(ii) Application of subsection (e)(1) is impractical because the relevance of specific information might be established only after considerable analysis and as the investigation progresses. Effective law enforcement requires the Office of Inspector General to keep information that may not be relevant to a specific Office of Inspector General investigation, but which may provide leads for appropriate law enforcement and to establish patterns of activity that might relate to the jurisdiction of the Office of Inspector General and/or other agencies.

(iii) Application of subsection (e)(2) would be counterproductive to performance of a criminal investigation because it would alert the individual to the existence of an investigation.

(iv) Application of subsection (e)(3) could discourage the free flow of information in a criminal law enforcement inquiry.

(v) The requirements of subsections (e)(4)(G) and (H), and (f) do not apply because this system is exempt from the provisions of subsection (d). Nevertheless, PBGC has published notice of its notification, access, and contest procedures because access is appropriate in some cases.

(vi) Although the Office of Inspector General endeavors to maintain accurate records, application of subsection (e)(5) is impractical because maintaining only those records that are accurate, relevant, timely, and complete and that assure fairness in determination is contrary to established investigative techniques. Information that may initially appear inaccurate, irrelevant, untimely, or incomplete may, when collated and analyzed with other available information, become more pertinent as an investigation progresses.

(vii) Application of subsection (e)(8) could prematurely reveal an ongoing criminal investigation to the subject of the investigation.

(viii) The provisions of subsection (g) do not apply to this system if an exemption otherwise applies.

(b) *Other Law Enforcement*. (1) *Exemption*. Under the authority granted by 5 U.S.C. 552a(k)(2), PBGC hereby exempts the system of records entitled ''PBGC–17, Office of Inspector General Investigative File System—PBGC'' from the provisions of 5 U.S.C. 552a(c)(3), (d)(1) through (4), (e)(1), (e)(4)(G) and (H), and (f) for the same reasons as stated in paragraph (a)(2) of this section, that is, because the system contains investigatory material compiled for law enforcement purposes other than material within the scope of subsection 552a(j)(2).

(2) *Reasons for exemption*. The reasons for asserting this exemption are because the disclosure and other requirements of the Privacy Act could substantially compromise the efficacy and integrity of the Office of Inspector General operations. Disclosure could invade the privacy of other individuals and disclose their identity when they were expressly promised confidentiality. Disclosure could interfere with the integrity of information which would otherwise be subject to privileges (see, e.g., 5 U.S.C. 552(b)(5)), and which could interfere with other important law enforcement concerns (see, e.g., 5 U.S.C. 552(b)(7)).

(c) *Federal Civilian or Contract Employment*. (1) Exemption. Under the authority granted by 5 U.S.C. 552a(k)(5), PBGC hereby exempts the system of records entitled ''PBGC–17, Office of Inspector General Investigative File System—PBGC'' from the provisions of 5 U.S.C. 552a(c)(3), (d)(1) through (4), (e)(1), (e)(4)(G) and (H), and (f) because the system contains investigatory material compiled for the purpose of determining eligibility or qualifications for federal civilian or contract employment.

(2) *Reason for exemption*. The reason for asserting this exemption is to protect from disclosure the identity of a confidential source when an express promise of confidentiality has been given to obtain information from sources who would otherwise be unwilling to provide necessary information.

[74 FR 27082, June 8, 2009]

§ 4902.12 Filing rules; computation of time.

(a) *Filing rules*—(1) *Where to file*. See § 4000.4 of this chapter for information on where to file a submission under this part with the PBGC.

(2) *Method of filing*. The PBGC applies the rules in subpart A of part 4000 of this chapter to determine permissible methods of filing with the PBGC under this part.

(3) *Date of filing*. The PBGC applies the rules in subpart C of part 4000 of this chapter to determine the date that a submission under this part was filed with the PBGC.

(b) *Computation of time*. The PBGC applies the rules in subpart D of part 4000 of this chapter to compute any time period for filing under this part.

[68 FR 61359, Oct. 28, 2003. Redesignated at 74 FR 27082, June 8, 2009]

PART 4903—DEBT COLLECTION

Subpart A—General Provisions

Sec.

4903.1 What definitions apply to this part?
4903.2 What do these regulations cover?
4903.3 Do these regulations adopt the Federal Claims Collection Standards (FCCS)?
4903.4 What rules apply for purposes of filing with PBGC, determining dates of filings, and computation of time?

Subpart B—Procedures to Collect Debts Owed to PBGC

4903.5 What notice will PBGC send to a debtor when collecting a debt owed to PBGC?
4903.6 How will PBGC add interest, penalty charges, and administrative costs to a debt owed to PBGC?
4903.7 When will PBGC allow a debtor to pay a debt owed to PBGC in installments instead of a lump sum?
4903.8 When will PBGC compromise a debt owed to PBGC?
4903.9 When will PBGC suspend or terminate debt collection on a debt owed to PBGC?
4903.10 When will PBGC transfer a debt owed to PBGC to the Treasury Department's Financial Management Service for collection?
4903.11 How will PBGC use administrative offset (offset of non-tax Federal payments) to collect a debt owed to PBGC?
4903.12 How will PBGC use tax refund offset to collect a debt owed to PBGC?
4903.13 How will PBGC offset a Federal employee's salary to collect a debt owed to PBGC?
4903.14 How will PBGC use administrative wage garnishment to collect a debt owed to PBGC from a debtor's wages?
4903.15 How will PBGC report debts owed to credit bureaus to PBGC?
4903.16 How will PBGC refer debts owed to private collection agencies to PBGC?
4903.17 When will PBGC refer debts owed to the Department of Justice to PBGC?
4903.18 Will a debtor who owes a debt to PBGC or another Federal agency, and persons controlled by or controlling such debtors, be ineligible for Federal loan assistance, grants, cooperative agreements, or other sources of Federal funds?
4903.19 How does a debtor request a special review based on a change in circumstances such as a catastrophic illness, divorce, death, or disability?
4903.20 Will PBGC issue a refund if money is erroneously collected on a debt?

Subpart C—Procedures for Offset of PBGC Payments to Collect Debts Owed to Other Federal Agencies

4903.21 How do other Federal agencies use the offset process to collect debts from payments issued by PBGC?
4903.22 What does PBGC do upon receipt of a request to offset the salary of a PBGC employee to collect a debt owed by the employee to another Federal agency?

AUTHORITY: 5 U.S.C. 5514; 29 U.S.C. 1302(b); 31 U.S.C. 3701–3719, 3720A; 5 CFR part 550, subpart K; 31 CFR part 285; 31 CFR parts 900–904.

SOURCE: 75 FR 68205, Nov. 5, 2010, unless otherwise noted.

Subpart A—General Provisions

§ 4903.1 What definitions apply to this part?

The following terms are defined in § 4001.2 of this chapter: Code, PBGC, and Person. In addition, for purposes of this part:

Administrative offset or offset means withholding funds payable by the United States (including funds payable by the United States on behalf of a state government) to, or held by the United States for, a person to satisfy a debt owed by the person. The term ''administrative offset'' can include, but is not limited to, the offset of Federal salary, vendor, retirement, and Social Security benefit payments. The terms ''centralized administrative offset'' and ''centralized offset'' refer to the process by which the Treasury Department's Financial Management Service offsets Federal payments through the Treasury Offset Program.

Administrative wage garnishment means the process by which a Federal agency orders a non-Federal employer to withhold amounts from a debtor's wages to satisfy a debt, as authorized by 31 U.S.C. 3720D, 31 CFR 285.11, and this part.

Agency or Federal agency means an executive department or agency; a military department; the United States Postal Service; the Postal Regulatory Commission; any nonappropriated fund instrumentality described in 5 U.S.C. 2105(c); the United States Senate; the United States House of Representatives; any court, court administrative office, or instrumentality in the judicial or legislative branches of the Government; or a Government corporation.

Creditor agency means any Federal agency that is owed a debt.

Debt means any amount of money, funds or property that has been determined by an appropriate official of the Federal Government to be owed to the United States government, including government-owned corporations, by a person. As used in this part, the term ''debt'' can include a debt owed to

PBGC, but does not include debts arising under the Internal Revenue Code of 1986 (26 U.S.C. 1 *et seq.*).

Debtor means a person who owes a debt to the United States.

Delinquent debt means a debt that has not been paid by the date specified in the agency's initial written demand for payment or applicable agreement or instrument (including a post-delinquency payment agreement) unless other satisfactory payment arrangements have been made.

Disposable pay has the same meaning as that term is defined in 5 CFR 550.1103.

Employee or *Federal employee* means a current employee of PBGC or other Federal agency, including a current member of the uniformed services, including the Army, Navy, Air Force, Marine Corps, Coast Guard, Commissioned Corps of the National Oceanic and Atmospheric Administration, Commissioned Corps of the Public Health Service, the National Guard, and the reserve forces of the uniformed services.

FCCS means the Federal Claims Collection Standards, 31 CFR parts 900–904.

Financial Management Service (FMS) means the Treasury Department bureau that is responsible for the centralized collection of delinquent debts through the offset of Federal payments and other means.

Payment agency or *Federal payment agency* means any Federal agency that transmits payment requests in the form of certified payment vouchers, or other similar forms, to a disbursing official for disbursement. The payment agency may be the agency that employs the debtor. In some cases, PBGC may be both the creditor agency and payment agency.

Salary offset means a type of administrative offset to collect a debt under Section 5514 of Title 5 of the United States Code and 5 CFR part 550, subpart K by deduction(s) at one or more officially established pay intervals from the current pay account of an employee with or without his or her consent.

Tax debt means a debt arising under the Code.

Tax refund offset means the reduction by the IRS of a tax overpayment payable to a taxpayer by the amount of past-due, legally enforceable debt owed by that taxpayer to a Federal agency pursuant to Treasury regulations.

§ 4903.2 What do these regulations cover?

(a) *Scope.* This part provides procedures for the collection of debts owed to PBGC, other than those subject to recoupment (29 CFR 4022, subpart E). This part also provides procedures for collection of other debts owed to the United States when a request for offset of a payment, for which PBGC is the payment agency, is received by PBGC from another agency (for example, when a PBGC employee owes a student loan debt to the United States Department of Education).

(b) *Applicability.*

(1) This part applies to PBGC when collecting a debt owed to PBGC; to persons who owe debts to PBGC; to persons controlled by or controlling persons who owe debts to a Federal agency, and to Federal agencies requesting offset of a payment issued by PBGC as a payment agency (including salary payments to PBGC employees).

(2) This part does not apply to debts owed to PBGC being collected through recoupment under subpart E of part 4022 of this chapter. Benefits paid by PBGC generally will not be offset, subject to limited exceptions (e.g., in certain fiduciary breach situations).

(3) This part does not apply to tax debts, to any debt based in whole or in part on conduct in violation of the antitrust laws, nor to any debt for which there is an indication of fraud or misrepresentation, as described in § 900.3 of the FCCS, unless the debt is returned by the Department of Justice to PBGC for handling.

(4) Nothing in this part precludes the use of other statutory or regulatory authority to collect or dispose of any debt. *See,* for example, 5 U.S.C. 5705, Advancements and Deductions, which authorizes PBGC to recover travel advances by offset of up to 100 percent of a Federal employee's accrued pay. *See, also,* 5 U.S.C. 4108, governing the collection of training expenses.

(5) To the extent that provisions of laws, other regulations, and PBGC enforcement policies differ from the provisions of this part, those provisions of law, other regulations, and PBGC enforcement policies apply to the remission or mitigation of fines, penalties, and forfeitures, and to debts arising under ERISA, rather than the provisions of this part.

(c) *Additional policies and procedures.* PBGC may, but is not required to, promulgate additional policies and procedures consistent with this part, the FCCS, and other applicable law, policies, and procedures.

(1) PBGC does not intend this regulation to prohibit PBGC from demanding the return of specific property or the payment of its value.

(2) The failure of PBGC to comply with any provision in this regulation will not serve as a defense to the existence of the debt.

(d) *Duplication not required.* Nothing in this part requires PBGC to duplicate notices or administrative proceedings required by contract, this part, or other laws or regulations.

(e) *Use of multiple collection remedies allowed.* PBGC and other Federal agencies may simultaneously use multiple collection remedies to collect a debt, except as prohibited by law. This part is intended to promote aggressive debt collection, using for each debt all available and appropriate collection remedies. To provide PBGC with flexibility in determining which remedies will be most efficient in collecting the particular debt, these remedies are not listed in any prescribed order.

§ 4903.3 Do these regulations adopt the Federal Claims Collection Standards (FCCS)?

This part adopts and incorporates all provisions of FCCS. This part also supplements the FCCS by prescribing procedures consistent with FCCS, as necessary and appropriate for PBGC operations.

§ 4903.4 What rules apply for purposes of filing with PBGC, determining dates of filings, and computation of time?

(a) *How and where to file.* PBGC applies the rules in subpart A of part 4000 of this chapter to determine permissible methods of filing with PBGC under this part. *See* § 4000.4 of this chapter for information on where to file.

(b) *Date of filing.* PBGC applies the rules in subpart C of part 4000 of this chapter to determine the date that a submission under this part was filed with PBGC.

(c) *Computation of time.* PBGC applies the rules of subpart D of part 4000 of this chapter to compute any time period under this part.

Subpart B—Procedures To Collect Debts Owed to PBGC

§ 4903.5 What notice will PBGC send to a debtor when collecting a debt owed to PBGC?

(a) *Notice requirements.* PBGC will collect debts owed to PBGC. PBGC will promptly send at least one written notice to a debtor informing the debtor of the consequences of failing to pay or otherwise resolve a debt owed to PBGC. The notice(s) will be sent to the debtor at the most current address of the debtor in PBGC's records. Generally, before starting the collection actions described in §§ 4903.6 and 4903.10 through 4903.18 of this part, PBGC will send no more than two written notices to the debtor. The notice will explain why the debt is owed to PBGC, the amount of the debt, how a debtor may pay the debt or make alternate repayment arrangements, how a debtor may review non-privileged documents related to the debt, how a debtor may dispute the debt, the collection remedies available to PBGC if the debtor refuses or otherwise fails to pay the debt, and other consequences to the debtor if the debt is not paid. Except as otherwise provided in paragraph (b) of this section, the written notice(s) will explain to the debtor:

(1) The nature and amount of the debt, and the facts giving rise to the debt;

(2) How interest, penalties, and administrative costs are added to the debt, the date by which payment must be made to avoid such charges, and that such assessments must be made unless excused in accordance with 31 CFR 901.9 (see § 4903.6 of this part);

(3) The date by which payment should be made to avoid the enforced

collection actions described in paragraph (a)(6) of this section;

(4) PBGC's willingness to discuss alternative payment arrangements and how the debtor may enter into a written agreement to repay the debt under terms acceptable to PBGC (*see* § 4903.7 of this part);

(5) The name, address, and telephone number of a contact person or office within PBGC;

(6) PBGC's intention to enforce collection by taking one or more of the following actions if the debtor fails to pay or otherwise resolve the debt:

(i) *Offset*. Offset the debtor's receipt of Federal payments, including income tax refunds, salary, certain benefit payments (such as Social Security), Federal retirement (*i.e.*, CSRS or FERS), vendor, travel reimbursements and advances, and other Federal payments (*see* §§ 4903.11 through 4903.13 of this part);

(ii) *Private collection agency*. Refer the debt to a private collection agency (*see* § 4903.16 of this part);

(iii) *Credit bureau reporting*. Report the debt to a credit bureau (*see* § 4903.15 of this part);

(iv) *Administrative wage garnishment*. Garnish the debtor's wages through administrative wage garnishment (*see* § 4903.14 of this part);

(v) *Litigation*. Whether PBGC will initiate litigation under 29 U.S.C. 1302 to collect the debt or refer the debt to the Department of Justice to initiate litigation to collect the debt (*see* § 4903.17 of this part);

(vi) *Treasury Department's Financial Management Service*. Refer the debt to the Financial Management Service for collection (*see* § 4903.10 of this part);

(7) That debts over 180 days delinquent must be referred to the Financial Management Service for the collection actions described in paragraph (a)(6) of this section (*see* § 4903.10 of this part);

(8) How the debtor may inspect and copy non-privileged records related to the debt;

(9) How the debtor may request a review of PBGC's determination that the debtor owes a debt to PBGC and present evidence that the debt is not delinquent or legally enforceable (*see* §§ 4903.11(c) and 4903.12(c) of this part);

(10) How a debtor who is an individual may request a hearing if PBGC intends to garnish the debtor's private sector (*i.e.*, non-Federal) wages (see § 4903.14(a) of this part), including:

(i) The method and time period for requesting a hearing;

(ii) That a request for a hearing, timely filed on or before the 15th business day following the date of the mailing of the notice, will stay the commencement of administrative wage garnishment, but not other collection procedures; and

(iii) The name and address of the office to which the request for a hearing should be sent.

(11) How a debtor who is an individual and a Federal employee subject to Federal salary offset may request a hearing (*see* § 4903.13(e) of this part), including:

(i) The method and time period for requesting a hearing;

(ii) That a request for a hearing, timely filed on or before the 15th day following receipt of the notice, will stay the commencement of salary offset, but not other collection procedures;

(iii) The name and address of the office to which the request for a hearing should be sent;

(iv) That PBGC will refer the debt to the debtor's employing agency or to the Financial Management Service to implement salary offset, unless the employee files a timely request for a hearing;

(v) That a final decision on the hearing, if requested, will be issued at the earliest practicable date, but not later than 60 days after the filing of the request for a hearing, unless the employee requests and the hearing official grants a delay in the proceedings;

(vi) That any knowingly false or frivolous statements, representations, or evidence may subject the Federal employee to penalties under the False Claims Act (31 U.S.C. 3729–3731) or other applicable statutory authority, and criminal penalties under 18 U.S.C. 286, 287, 1001, and 1002, or other applicable statutory authority;

(vii) That unless prohibited by contract or statute, amounts paid on or deducted for the debt which are later waived or found not owed to the United

States will be promptly refunded to the employee; and

(viii) That proceedings with respect to such debt are governed by 5 U.S.C. 5514 and 31 U.S.C. 3716.

(12) How the debtor may request a waiver of the debt, if applicable. *See,* for example, § 4903.6 and § 4903.13(f) of this part.

(13) How the debtor's spouse may claim his or her share of a joint income tax refund by filing Form 8379 with the Internal Revenue Service (*see http://www.irs.gov*);

(14) How the debtor may exercise other rights and remedies, if any, available to the debtor under statutory or regulatory authority under which the debt arose.

(15) That certain debtors and, if applicable, persons controlled by or controlling such debtors, may be ineligible for Federal Government loans, guaranties and insurance, grants, cooperative agreements or other Federal funds (*see* 28 U.S.C. 3201(e); 31 U.S.C. 3720B, 31 CFR 285.13, and § 4903.18(a) of this part); and

(16) That the debtor should advise PBGC of a bankruptcy proceeding of the debtor or another person liable for the debt being collected.

(b) *Exceptions to notice requirements.* PBGC may omit from a notice to a debtor one or more of the provisions contained in paragraphs (a)(6) through (a)(16) of this section if PBGC, in consultation with its legal counsel, determines that any provision is not legally required given the collection remedies to be applied to a particular debt.

(c) *Respond to debtors; comply with FCCS.* PBGC should respond promptly to communications from debtors and comply with other FCCS provisions applicable to the administrative collection of debts. *See* 31 CFR part 901.

§ 4903.6 How will PBGC add interest, penalty charges, and administrative costs to a debt owed to PBGC?

(a) *Assessment and notice.* PBGC will assess interest, penalties and administrative costs on PBGC debts in accordance with the provisions of 31 U.S.C. 3717, 31 CFR 901.9 and other applicable requirements. Administrative costs, including the costs of processing and handling a delinquent debt, will be determined by PBGC. PBGC will explain in the notice to the debtor how interest, penalties, costs, and other charges are assessed, unless the requirements are included in a contract or other legally binding agreement.

(b) *Waiver of interest, penalties, and administrative costs.* Unless otherwise required by law, regulation, or contract, PBGC will not charge interest if the amount due on the debt is paid within 30 days of the date from which the interest accrues. *See* 31 U.S.C. 3717(d). To the extent permitted by law, PBGC may waive interest, penalties, and administrative costs, or any portion thereof, in appropriate circumstances consistent with the FCCS.

(c) *Accrual during suspension of debt collection.* In most cases, interest, penalties and administrative costs will continue to accrue during any period when collection has been suspended for any reason (for example, when the debtor has requested a hearing). PBGC may suspend accrual of any or all of these charges in appropriate circumstances consistent with the FCCS.

§ 4903.7 When will PBGC allow a debtor to pay a debt owed to PBGC in installments instead of a lump sum?

If a debtor is financially unable to pay the debt in a lump sum, PBGC may accept payment of a debt in regular installments, in accordance with the provisions of 31 CFR 901.8.

§ 4903.8 When will PBGC compromise a debt owed to PBGC?

If PBGC cannot collect the full amount of a debt owed to PBGC, PBGC may compromise the debt in accordance with the provisions of 31 CFR part 902.

§ 4903.9 When will PBGC suspend or terminate debt collection on a debt owed to PBGC?

If, after pursuing all appropriate means of collection, PBGC determines that a debt owed to PBGC is uncollectible, PBGC may suspend or terminate debt collection activity in accordance with the provisions of 31 CFR part 903. Termination of debt collection activity by PBGC does not discharge the indebtedness.

§ 4903.10 When will PBGC transfer a debt owed to PBGC to the Treasury Department's Financial Management Service for collection?

(a) PBGC will transfer a debt owed to PBGC that is more than 180 days delinquent to the Financial Management Service for debt collection services, a process known as ''cross-servicing.'' *See* 31 U.S.C. 3711(g) and 31 CFR 285.12. PBGC may transfer debts owed to PBGC that are delinquent 180 days or less to the Financial Management Service in accordance with the procedures described in 31 CFR 285.12. The Financial Management Service takes appropriate action to collect or compromise the transferred PBGC debt, or to suspend or terminate collection action thereon, in accordance with the statutory and regulatory requirements and authorities applicable to the debt owed to PBGC and the collection action to be taken. See 31 CFR 285.12(b) and 285.12(c)(2). Appropriate action can include, but is not limited to, contact with the debtor, referral of the debt owed to PBGC to the Treasury Offset Program, private collection agencies, or the Department of Justice; reporting of the debt to credit bureaus, and/or administrative wage garnishment.

(b) At least 60 days prior to transferring a debt owed to PBGC to the Financial Management Service, PBGC will send notice to the debtor as required by § 4903.5 of this part. PBGC will certify to the Financial Management Service that the debt is valid, delinquent, legally enforceable, and that there are no legal bars to collection. In addition, PBGC will certify its compliance with all applicable due process and other requirements as described in this part and other Federal laws. See 31 CFR 285.12(i) regarding the certification requirement.

(c) As part of its debt collection process, the Financial Management Service uses the Treasury Offset Program to collect debts owed to PBGC by administrative and tax refund offset. *See* 31 CFR 285.12(g). Under the Treasury Offset Program, before a Federal payment is disbursed, the Financial Management Service compares the name and taxpayer identification number (TIN) of the payee with the names and TINs of debtors that have been submitted by Federal agencies and states to the Treasury Offset Program database. If there is a match, the Financial Management Service (or, in some cases, another Federal disbursing agency) offsets all or a portion of the Federal payment, disburses any remaining payment to the payee, and pays the offset amount to the creditor agency. Federal payments eligible for offset include, but are not limited to, income tax refunds, salary, travel advances and reimbursements, retirement and vendor payments, and Social Security and other benefit payments.

§ 4903.11 How will PBGC use administrative offset (offset of non-tax Federal payments) to collect a debt owed to PBGC?

(a) *Centralized administrative offset through the Treasury Offset Program.*

(1) In most cases, the Financial Management Service uses the Treasury Offset Program to collect debts owed to PBGC by the offset of Federal payments. *See* § 4903.10(c) of this part. If not already transferred to the Financial Management Service under § 4903.10 of this part, PBGC will refer debt over 180 days delinquent to the Treasury Offset Program for collection by centralized administrative offset. *See* 31 U.S.C. 3716(c)(6); 31 CFR part 285, subpart A; and 31 CFR 901.3(b). PBGC may refer to the Treasury Offset Program for offset any debt owed to PBGC that has been delinquent for 180 days or less.

(2) At least 60 days prior to referring a debt owed to PBGC to the Treasury Offset Program, in accordance with paragraph (a)(1) of this section, PBGC will send notice to the debtor in accordance with the requirements of § 4903.5 of this part. PBGC will certify to the Financial Management Service, that the debt is valid, delinquent, and legally enforceable, and that there are no legal bars to collection by offset. In addition, PBGC will certify its compliance with the requirements in this part.

(b) *Non-centralized administrative offset for debts owed to PBGC.*

(1) When centralized administrative offset through the Treasury Offset Program is not available or appropriate, PBGC may collect past-due, legally enforceable debts owed to PBGC through

non-centralized administrative offset. See 31 CFR 901.3(c). In these cases, PBGC may offset a payment internally or make an offset request directly to a Federal payment agency.

(2) At least 30 days prior to offsetting a payment internally or requesting a Federal payment agency to offset a payment, PBGC will send notice to the debtor in accordance with the requirements of §4903.5 of this part. When referring a debt owed to PBGC for offset under this paragraph (b), PBGC will certify that the debt is valid, delinquent, and legally enforceable, and that there are no legal bars to collection by offset. In addition, PBGC will certify its compliance with these regulations concerning administrative offset. *See* 31 CFR 901.3(c)(2)(ii).

(c) *Administrative review*. The notice described in §4903.5 of this part will explain to the debtor how to request an administrative review of PBGC's determination that the debtor owes a debt to PBGC and how to present evidence that the debt is not delinquent or legally enforceable. In addition to challenging the existence and amount of the debt owed to PBGC, the debtor may seek a review of the terms of repayment. In most cases, PBGC will provide administrative review based upon the written record, including documentation provided by the debtor. PBGC may provide the debtor with a reasonable opportunity for an oral hearing when the debtor requests reconsideration of the debt owed to PBGC, and PBGC determines that the question of the indebtedness cannot be resolved by review of the documentary evidence. Unless otherwise required by law, an oral hearing under this section is not required to be a formal evidentiary hearing. PBGC will carefully document all significant matters discussed at the hearing. PBGC may suspend collection through administrative offset and/or other collection actions pending the resolution of a debtor's dispute.

(d) *Procedures for expedited offset*. Under the circumstances described in 31 CFR 901.3(b)(4)(iii), PBGC may offset against a payment to be made to the debtor prior to sending a notice to the debtor, as described in §4903.5 of this part, or completing the procedures described in paragraph (b)(2) and (c) of this section. PBGC will give the debtor notice and an opportunity for review as soon as practicable and promptly refund any money ultimately found not to have been owed to the Government.

§4903.12 How will PBGC use tax refund offset to collect a debt owed to PBGC?

(a) *Tax refund offset*. In most cases, the Financial Management Service uses the Treasury Offset Program to collect debts owed to PBGC by the offset of tax refunds and other Federal payments. *See* §4903.10(c) of this part. If not already transferred to the Financial Management Service under §4903.10 of this part, PBGC will refer to the Treasury Offset Program any past-due, legally enforceable debt for collection by tax refund offset. *See* 26 U.S.C. 6402(d), 31 U.S.C. 3720A and 31 CFR 285.2.

(b) *Notice*. At least 60 days prior to referring a debt owed to the Treasury Offset Program, PBGC will send notice to the debtor in accordance with the requirements of §4903.5 of this part. PBGC will certify to the Financial Management Service's Treasury Offset Program that the debt is past due and legally enforceable in the amount submitted, and that the PBGC has made reasonable efforts to obtain payment of the debt as described in 31 CFR 285.2(d). In addition, PBGC will certify its compliance with all applicable due process and other requirements described in this part and other Federal laws. *See* 31 U.S.C. 3720A(b) and 31 CFR 285.2.

(c) *Administrative review*. The notice described in §4903.5 of this part will provide the debtor with at least 60 days prior to the initiation of tax refund offset to request an administrative review as described in §4903.11(c) of this part. PBGC may suspend collection through tax refund offset and/or other collection actions pending the resolution of the debtor's dispute.

§4903.13 How will PBGC offset a Federal employee's salary to collect a debt owed to PBGC?

(a) *Federal salary offset*.

(1) Salary offset is used to collect debts owed to the United States or PBGC by Federal employees. If a Federal employee owes PBGC a debt,

PBGC may offset the employee's Federal salary to collect the debt in the manner described in this section. For information on how a Federal agency other than PBGC may collect debt from the salary of a PBGC employee, see §§ 4903.21 and 4903.22, subpart C, of this part.

(2) Nothing in this part requires PBGC to collect a debt in accordance with the provisions of this section if Federal law allows other means to collect. *See*, for example, 5 U.S.C. 5705 (travel advances not used for allowable travel expenses are recoverable from the employee or his estate by setoff against accrued pay and other means) and 5 U.S.C. 4108 (recovery of training expenses).

(3) PBGC may use the administrative wage garnishment procedure described in § 4903.14 of this part to collect from an individual's non-Federal wages a debt owed to PBGC.

(b) *Centralized salary offset through the Treasury Offset Program.* As described in § 4903.10(a) of this part, PBGC will refer debts owed to PBGC to the Financial Management Service for collection by administrative offset, including salary offset, through the Treasury Offset Program. When possible, PBGC will attempt salary offset through the Treasury Offset Program before applying the procedures in paragraph (c) of this section. *See* 5 CFR 550.1108 and 550.1109.

(c) *Non-centralized salary offset for debts owed to PBGC.* When centralized salary offset through the Treasury Offset Program is not available or appropriate, PBGC may collect delinquent debts owed to PBGC through non-centralized salary offset. *See* 5 CFR 550.1109. In these cases, PBGC may offset a payment internally or make a request directly to a Federal payment agency to offset a salary payment to collect a delinquent debt owed to PBGC by a Federal employee. Thirty (30) days prior to offsetting internally or requesting a Federal agency to offset a salary payment, PBGC will send notice to the debtor in accordance with the requirements of § 4903.5 of this part. When referring a debt owed to PBGC for offset, PBGC will certify to the payment agency that the debt is valid, delinquent and legally enforceable in the amount stated, and there are no legal bars to collection by salary offset. In addition, PBGC will certify that all due process and other prerequisites to salary offset have been met. See 5 U.S.C. 5514, 31 U.S.C. 3716(a), and this section for a description of the due process and other prerequisites for salary offset.

(d) *When prior notice not required.* PBGC is not required to provide prior notice to an employee when the following adjustments are made by PBGC to a PBGC employee's pay:

(1) Any adjustment to pay arising out of any employee's election of coverage or a change in coverage under a Federal benefits program requiring periodic deductions from pay if the amount to be recovered was accumulated over 4 pay periods or less;

(2) A routine intra-agency adjustment of pay that is made to correct an overpayment of pay attributable to clerical or administrative errors or delays in processing pay documents, if the overpayment occurred within the 4 pay periods preceding the adjustment, and, at the time of such adjustment, or as soon thereafter as practicable, the individual is provided written notice of the nature and the amount of the adjustment and the point of contact for contesting such adjustment; or

(3) Any adjustment to collect a debt amounting to $50 or less, if, at the time of such adjustment, or as soon thereafter as practicable, the individual is provided written notice of the nature and the amount of the adjustment and a point of contact for contesting such adjustment.

(e) *Administrative review*— (1) *Request for administrative review.* A Federal employee who has received a notice that his or her debt will be collected by means of salary offset may request administrative review concerning the existence or amount of the debt owed to PBGC. The Federal employee also may request administrative review concerning the amount proposed to be deducted from the employee's pay each pay period. The employee must send any request for administrative review in writing to the office designated in the notice described in § 4903.5. *See* § 4903.5(a)(11). The request must be received by the designated office on or

before the 15th day following the employee's receipt of the notice. The employee must sign the request and specify whether an oral hearing is requested. If an oral hearing is requested, the employee must explain why the matter cannot be resolved by review of the documentary evidence alone. All travel expenses incurred by the Federal employee in connection with an in-person hearing will be borne by the employee. *See* 31 CFR 901.3(a)(7).

(2) *Failure to submit timely request for administrative review.* If the employee fails to submit a request for administrative review within the time period described in paragraph (e)(1) of this section, salary offset may be initiated. However, PBGC may accept a late request for administrative review if the employee can show that the late request was the result of circumstances beyond the employee's control or because of a failure to receive actual notice of the filing deadline.

(3) *Reviewing official.* PBGC must obtain the services of a reviewing official who is not under the supervision or control of the Director of the PBGC. PBGC may enter into interagency support agreements with other agencies to provide reviewing officials.

(4) *Notice of administrative review.* After the employee requests administrative review, the designated reviewing official will inform the employee of the form of the review to be provided. For oral hearings, the notice will set forth the date, time and location of the hearing. For determinations based on review of written records, the notice will notify the employee of the date by which he or she should submit written arguments to the designated reviewing official. The reviewing official will give the employee reasonable time to submit documentation in support of the employee's position. The reviewing official will schedule a new hearing date if requested by both parties. The reviewing official will give both parties reasonable notice of the time and place of a rescheduled hearing.

(5) *Oral hearing.* The reviewing official will conduct an oral hearing if the official determines that the matter cannot be resolved by review of documentary evidence alone. The hearing need not take the form of an evidentiary hearing, but may be conducted in a manner determined by the reviewing official, including but not limited to:

(i) Informal conferences (in person or electronically) with the reviewing official, in which the employee and agency representative will be given a reasonable opportunity to present evidence, witnesses and argument;

(ii) Informal meetings with an interview of the employee by the reviewing official; or

(iii) Formal written submissions, with an opportunity for oral presentation.

(6) *Determination based on review of written record.* If the reviewing official determines that an oral hearing is not necessary, the official will make the determination based upon a review of the available written record, including any documentation submitted by the employee in support of his or her position. *See* 31 CFR 901.3(a)(7).

(7) *Failure to appear or submit documentary evidence.* In the absence of good cause shown (for example, excused illness), if the employee fails to appear at an oral hearing or fails to submit documentary evidence as required for administrative review, the employee will have waived the right to administrative review, and salary offset may be initiated. Further, the employee will have been deemed to admit the existence and amount of the debt owed to PBGC as described in the notice of intent to offset. If PBGC's representative fails to appear at an oral hearing, the reviewing official will proceed with the hearing as scheduled, and make his or her determination based upon the oral testimony presented and the documentary evidence submitted by both parties.

(8) *Burden of proof.* PBGC will have the initial burden to prove the existence and amount of the debt owed to PBGC. Thereafter, if the employee disputes the existence or amount of the debt, the employee must prove by a preponderance of the evidence that no such debt exists or that the amount of the debt is incorrect. In addition, the employee may present evidence that the proposed terms of the repayment schedule are unlawful, would cause a financial hardship to the employee, or

that collection of the debt may not be pursued due to operation of law.

(9) *Record*. The reviewing official will maintain a summary record of any hearing provided by this part. Witnesses will testify under oath or affirmation in oral hearings. See 31 CFR 901.3(a)(7).

(10) *Date of decision*. The reviewing official will issue a written opinion stating the official's decision, based upon documentary evidence and information developed during the administrative review, as soon as practicable after the review, but not later than 60 days after the date on which the request for review was received by PBGC. If the employee (or the parties jointly) requests a delay in the proceedings, the deadline for the decision may be postponed by the number of days by which the review was postponed. When a decision is not timely rendered, PBGC will waive interest and penalties applied to the debt owed to PBGC for the period beginning with the date the decision is due and ending on the date the decision is issued.

(11) *Content of decision*. The written decision will include:

(i) A statement of the facts presented to support the origin, nature, and amount of the debt owed to PBGC;

(ii) The reviewing official's findings, analysis, and conclusions; and

(iii) The terms of any repayment schedules, if applicable.

(12) *Final agency action*. The reviewing official's decision will be final.

(f) *Waiver not precluded*. Nothing in this part precludes an employee from requesting waiver of an overpayment under 5 U.S.C. 5584 or 8346(b), 32 U.S.C. 716, or other statutory authority. PBGC may grant such waivers when it would be against equity and good conscience or not in the United States' best interest to collect such debts, in accordance with those authorities, 5 CFR 550.1102(b)(2).

(g) *Salary offset process*— (1) *Determination of disposable pay*. PBGC will implement salary offset when requested to do so by PBGC, as described in paragraph (c) of this section, or another agency, as described in § 4903.21 of this part. If the debtor is not employed by PBGC, the agency employing the debtor will determine the amount of the employee's disposable pay and will implement salary offset upon request.

(2) *When salary offset begins*. Deductions will begin within three official pay periods following receipt of the creditor agency's request for offset or after a decision has been issued following a request for a hearing.

(3) *Amount of salary offset*. The amount to be offset from each salary payment will be up to 15 percent of a debtor's disposable pay, subject to the requirements of 15 U.S.C. 1673, as follows:

(i) If the amount of the debt is equal to or less than 15 percent of the disposable pay, such debt generally will be collected in a lump sum payment;

(ii) Installment deductions will be made over a period of no greater than the anticipated period of employment. An installment deduction will not exceed 15 percent of the disposable pay from which the deduction is made unless the employee has agreed in writing to the deduction of a greater amount, or the creditor agency has determined that smaller deductions are appropriate based on the employee's ability to pay.

(4) *Final salary payment*. After the employee has separated either voluntarily or involuntarily from the payment agency, the payment agency may make a lump sum deduction exceeding 15 percent of disposable pay from any final salary or other payments pursuant to 31 U.S.C. 3716 in order to satisfy a debt owed to PBGC.

(h) *Payment agency's responsibilities*.

(1) As required by 5 CFR 550.1109, if the employee separates from the payment agency from which PBGC has requested salary offset, the payment agency must certify the total amount of its collection and notify PBGC and the employee of the amounts collected. If the payment agency knows that the employee is entitled to payments from the Civil Service Retirement Fund and Disability Fund, the Federal Employee Retirement System, or other similar payments, it must provide written notification to the agency responsible for making such payments that the debtor owes a debt to PBGC, the amount of the debt, and that PBGC has complied with the provisions of this section. PBGC must submit a properly certified

claim to the agency responsible for making such payments before the collection can be made.

(2) If the employee is already separated from employment and all payments due from his or her former payment agency have been made, PBGC may request that money due and payable to the employee from the Civil Service Retirement Fund and Disability Fund, the Federal Employee Retirement System, or other similar funds, be administratively offset to collect the debt. Generally, PBGC will collect such monies through the Treasury Offset Program as described in § 4903.10(c) of this part.

(3) When an employee transfers to another agency, PBGC should resume collection with the employee's new payment agency in order to continue salary offset.

§ 4903.14 How will PBGC use administrative wage garnishment to collect a debt owed to PBGC from a debtor's wages?

(a) PBGC is authorized to collect debts owed to PBGC from an individual debtor's wages by means of administrative wage garnishment in accordance with the requirements of 31 U.S.C. 3720D and 31 CFR 285.11. This part adopts and incorporates all of the provisions of 31 CFR 285.11 concerning administrative wage garnishment, including the hearing procedures described in 31 CFR 285.11(f). PBGC may use administrative wage garnishment to collect a delinquent debt unless the debtor is making timely payments under an agreement to pay the debt in installments (*see* § 4903.7 of this part). Thirty (30) days prior to initiating an administrative wage garnishment, PBGC will send notice to the debtor in accordance with the requirements of § 4903.5 of this part, including the requirements of § 4903.5(a)(10) of this part. For debts referred to the Financial Management Service under § 4903.10 of this part, PBGC may authorize the Financial Management Service to send a notice informing the debtor that administrative wage garnishment will be initiated and how the debtor may request a hearing as described in § 4903.5(a)(10) of this part. If a debtor makes a timely request for a hearing, administrative wage garnishment will not begin until a hearing is held and a decision is sent to the debtor. PBGC will determine whether the matter requires an oral hearing or if a determination based upon review of the written record is sufficient. PBGC will provide the debtor with a reasonable opportunity for an oral hearing when it determines that the issues in dispute cannot be resolved by a review of the documentary evidence. *See* 31 CFR 285.11(f)(1)–(4). Even if a debtor's hearing request is not timely, PBGC may suspend collection by administrative wage garnishment in accordance with the provisions of 31 CFR 285.11(f)(5). All travel expenses incurred by the debtor in connection with an in-person hearing will be borne by the debtor.

(b) This section does not apply to Federal salary offset, the process by which PBGC collects debts owed to PBGC from the salaries of Federal employees (*see* § 4903.13 of this part).

§ 4903.15 How will PBGC report debts owed to PBGC to credit bureaus?

PBGC will report delinquent debts owed to PBGC to credit bureaus in accordance with the provisions of 31 U.S.C. 3711(e), 31 CFR 901.4, and the Office of Management and Budget Circular A–129, ''Policies for Federal Credit Programs and Non-tax Receivables.'' At least 60 days prior to reporting a delinquent debt to a consumer reporting agency, PBGC will send notice to the debtor in accordance with the requirements of § 4903.5 of this part. PBGC may authorize the Financial Management Service to report to credit bureaus those delinquent debts owed to the PBGC that have been transferred to the Financial Management Service under § 4903.10 of this part.

§ 4903.16 How will PBGC refer debts owed to PBGC to private collection agencies?

PBGC will transfer delinquent debts owed to PBGC to the Financial Management Service to obtain debt collection services provided by private collection agencies. See § 4903.10 of this part.

§ 4903.17 When will PBGC refer debts owed to PBGC to the Department of Justice?

PBGC may initiate litigation pursuant to 29 U.S.C. 1302 with delinquent debts on which aggressive collection activity has been taken in accordance with this part and that should not be compromised, and on which collection activity should not be suspended or terminated. Alternatively, PBGC may refer debts owed to PBGC having a principal balance over $100,000, or such higher amount as authorized by the Attorney General, to the Department of Justice for approval of any compromise of a debt or suspension or termination of collection activity. See §§ 4903.8 and 4903.9 of this part; 31 CFR 902.1, 903.1, and part 904. PBGC may authorize the Financial Management Service to refer to the Department of Justice for litigation those delinquent debts that have been transferred to the Financial Management Service under § 4903.10 of this part.

§ 4903.18 Will a debtor who owes a debt to PBGC or another Federal agency, and persons controlled by or controlling such debtors, be ineligible for Federal loan assistance, grants, cooperative agreements, or other sources of Federal funds?

(a) Delinquent debtors are ineligible for and barred from obtaining Federal loans or loan insurance or guaranties. As required by 31 U.S.C. 3720B and 31 CFR 901.6, PBGC will not extend financial assistance in the form of a loan, loan guarantee, or loan insurance to any person delinquent on a debt owed to a Federal agency. PBGC may issue standards under which it may determine that persons controlled by or controlling such delinquent debtors are similarly ineligible in accordance with 31 CFR 285.13(c)(2). This prohibition does not apply to disaster loans. PBGC may extend credit after the delinquency has been resolved. *See* 31 CFR 285.13.

(b) This section does not apply to loans provided to multi-employer pension plans pursuant to 29 U.S.C. 1431, 29 CFR 4261.1 and 4281.47.

(c) A debtor who has a judgment lien against the debtor's property for a debt to the United States is not eligible to receive grants, loans or funds directly or indirectly from the United States until the judgment is paid in full or otherwise satisfied. This prohibition does not apply to funds to which the debtor is entitled as beneficiary. PBGC may promulgate regulations to allow for waivers of this ineligibility. *See* 28 U.S.C. 3201(e).

§ 4903.19 How does a debtor request a special review based on a change in circumstances such as catastrophic illness, divorce, death, or disability?

(a) *Material change in circumstances.* A debtor who owes a debt to PBGC may, at any time, request a special review by PBGC of the amount of any offset, administrative wage garnishment, or voluntary payment, based on materially changed circumstances beyond the control of the debtor such as, but not limited to, catastrophic illness, divorce, death, or disability.

(b) *Inability to pay.* For purposes of this section, in determining whether an involuntary or voluntary payment would prevent the debtor from meeting essential subsistence expenses (e.g., costs incurred for food, housing, clothing, transportation, and medical care), the debtor must submit a detailed statement and supporting documents for the debtor, his or her spouse, and dependents, indicating:

(1) Income from all sources;

(2) Assets;

(3) Liabilities;

(4) Number of dependents;

(5) Expenses for food, housing, clothing, and transportation;

(6) Medical expenses;

(7) Exceptional expenses, if any; and

(8) Any additional materials and information that PBGC may request relating to ability or inability to pay the amount(s) currently required.

(c) *Alternative payment arrangement.* If the debtor requests a special review under this section, the debtor must submit an alternative proposed payment schedule and a statement to PBGC, with supporting documents, showing why the current offset, garnishment or repayment schedule imposes an extreme financial hardship on the debtor. PBGC will evaluate the statement and documentation and determine whether the current offset, garnishment, or repayment schedule imposes extreme financial hardship on

the debtor. PBGC will notify the debtor in writing of such determination, including, if appropriate, a revised offset, garnishment, or payment schedule. If the special review results in a revised offset, garnishment, or repayment schedule, PBGC will notify the appropriate Federal agency or other persons about the new terms.

§ 4903.20 Will PBGC issue a refund if money is erroneously collected on a debt?

PBGC will promptly refund to a debtor any amount collected on a debt owed to PBGC when the debt is waived or otherwise found not to be owed to the United States, or as otherwise required by law.

Subpart C—Procedures for Offset of PBGC Payments To Collect Debts Owed to Other Federal Agencies

§ 4903.21 How do other Federal agencies use the offset process to collect debts from payments issued by PBGC?

(a) *Offset of PBGC payments to collect debts owed to other Federal agencies.* (1) In most cases, Federal agencies submit debts to the Treasury Offset Program to collect delinquent debts from payments issued by PBGC and other Federal agencies, a process known as ''centralized offset.'' When centralized offset is not available or appropriate, any Federal agency may ask PBGC (when acting as a ''payment agency'') to collect a debt owed to such agency by offsetting funds payable to a debtor by PBGC, including salary payments issued to PBGC employees. This section and § 4903.21 of this subpart C apply when a Federal agency asks PBGC to offset a payment issued by PBGC to a person who owes a debt to the United States.

(2) This subpart C does not apply to debts owed to PBGC. *See* §§ 4903.11 through 4903.13 of this part for offset procedures applicable to debts owed to PBGC.

(3) This subpart C does not apply to the collection of non-PBGC debts through tax refund offset. See 31 CFR 285.2 for tax refund offset procedures.

(4) Benefits paid by PBGC generally will not be offset, subject to limited exceptions (e.g., in certain fiduciary breach situations).

(b) *Administrative offset (including salary offset); certification.* PBGC will initiate a requested offset only upon receipt of written certification from the creditor agency that the debtor owes the past-due, legally enforceable debt in the amount stated, and that the creditor agency has fully complied with all applicable due process and other requirements contained in 31 U.S.C. 3716, 5 U.S.C. 5514, and the creditor agency's regulations, as applicable. Offsets will continue until the debt is paid in full or otherwise resolved to the satisfaction of the creditor agency.

(c) *Where a creditor agency makes requests for offset.* Requests for offset under this section must be sent to PBGC, ATTN: Chief Financial Officer, 1200 K Street, NW., Washington, DC 20005.

(d) *Incomplete certification.* PBGC will return an incomplete debt certification to the creditor agency with notice that the creditor agency must comply with paragraph (b) of this section before action will be taken to collect a debt from a payment issued by PBGC.

(e) *Review.* PBGC is not authorized to review the merits of the creditor agency's determination with respect to the amount or validity of the debt certified by the creditor agency.

(f) *When PBGC will not comply with offset request.* PBGC will comply with the offset request of another agency unless PBGC determines, in consultation with that agency, that the offset would not be in the best interests of the United States, or would otherwise be contrary to law.

(g) *Multiple debts.* When two or more creditor agencies are seeking offsets from payments made to the same person, or when two or more debts are owed to a single creditor agency, PBGC may determine the order in which the debts will be collected or whether one or more debts should be collected by offset simultaneously.

(h) *Priority of debts owed to PBGC.* For purposes of this section, debts owed to PBGC generally take precedence over debts owed to other agencies. PBGC may determine whether to pay debts

owed to other agencies before paying a debt owed to PBGC. PBGC will determine the order in which the debts will be collected based on the best interests of the United States.

§ 4903.22 What does PBGC do upon receipt of a request to offset the salary of a PBGC employee to collect a debt owed by the employee to another Federal agency?

(a) *Notice to a PBGC employee.* When PBGC receives proper certification of a debt owed by one of its employees, PBGC will send a written notice to the employee indicating that a certified debt claim has been received from the creditor agency, the amount of the debt claimed to be owed by the creditor agency, the date deductions from salary will begin, and the amount of such deductions. PBGC will begin deductions from the employee's pay at the next officially established pay interval.

(b) *Amount of deductions from a PBGC employee's salary.* The amount deducted under § 4903.21(b) of this part will be the lesser of the amount of the debt certified by the creditor agency or an amount up to 15 percent of the debtor's disposable pay so long as that amount does not exceed limitations imposed by 15 U.S.C. 1673. Deductions will continue until PBGC knows that the debt is paid in full or until otherwise instructed by the creditor agency. Alternatively, the amount offset may be an amount agreed upon, in writing, by the debtor and the creditor agency. *See* § 4903.13(g) (salary offset process).

(c) *When the debtor is no longer employed by PBGC*—(1) *Offset of final and subsequent payments.* If a PBGC employee retires or resigns or if his or her employment ends before collection of the debt is complete, PBGC will continue to offset, under 31 U.S.C. 3716, up to 100 percent of an employee's subsequent payments until the debt is paid or otherwise resolved. Such payments include a debtor's final salary payment, lump-sum leave payment, and other payments payable to the debtor by PBGC. *See* 31 U.S.C. 3716 and 5 CFR 550.1104(l) and 550.1104(m).

(2) *Notice to the creditor agency.* If the employee is separated from PBGC before the debt is paid in full, PBGC will certify to the creditor agency the total amount of its collection. If PBGC knows that the employee is entitled to payments from the Civil Service Retirement and Disability Fund, Federal Employee Retirement System, or other similar payments, PBGC will provide written notice to the agency making such payments that the debtor owes a debt (including the amount) and that the provisions of 5 CFR 550.1109 have been fully complied with. The creditor agency is responsible for submitting a certified claim to the agency responsible for making such payments before collection may begin. Generally, creditor agencies will collect such monies through the Treasury Offset Program as described in § 4903.10(c) of this part.

(3) *Notice to the debtor.* PBGC will provide to the debtor a copy of any notices sent to the creditor agency under paragraph (c)(2) of this section.

(d) *When the debtor transfers to another Federal agency—(1) Notice to the creditor agency.* If the debtor transfers to another Federal agency before the debt is paid in full, PBGC will notify the creditor agency and will certify the total amount of its collection on the debt. PBGC will provide a copy of the certification to the creditor agency. The creditor agency is responsible for submitting a certified claim to the debtor's new employing agency before collection may begin.

(2) *Notice to the debtor.* PBGC will provide to the debtor a copy of any notices and certifications sent to the creditor agency under paragraph (d)(1) of this section.

(e) *Request for hearing official.* PBGC will provide a hearing official upon the creditor agency's request with respect to a PBGC employee. *See* 5 CFR 550.1107(a).

PART 4905—APPEARANCES IN CERTAIN PROCEEDINGS

Sec.

4905.1 Purpose and scope.
4905.2 Definitions.
4905.3 General.
4905.4 Appearances by PBGC employees.
4905.5 Requests for authenticated copies of PBGC records.
4905.6 Penalty.

AUTHORITY: 29 U.S.C. 1302(b); E.O. 11222, 30 FR 6469; 5 CFR 735.104.

SOURCE: 61 FR 34133, July 1, 1996, unless otherwise noted.

§ 4905.1 Purpose and scope.

(a) *Purpose.* This part sets forth the rules and procedures to be followed when a PBGC employee or former employee is requested or served with compulsory process to appear as a witness or produce documents in a proceeding in which the PBGC is not a party, if such appearance arises out of, or is related to, his or her employment with the PBGC. It provides a centralized decisionmaking mechanism for responding to such requests and compulsory process.

(b) *Scope.* (1) This part applies when, in a judicial, administrative, legislative, or other proceeding, a PBGC employee or former employee is requested or served with compulsory process to provide testimony concerning information acquired in the course of performing official duties or because of official status and/or to produce material acquired in the course of performing official duties or contained in PBGC files.

(2) This part does not apply to:

(i) Proceedings in which the PBGC is a party;

(ii) Congressional requests or subpoenas for testimony or documents; or

(iii) Appearances by PBGC employees in proceedings that do not arise out of, or relate to, their employment with PBGC (e.g., outside activities that are engaged in consistent with applicable standards of ethical conduct).

§ 4905.2 Definitions.

For purposes of this part:

Appearance means testimony or production of documents or other material, including an affidavit, deposition, interrogatory, declaration, or other required written submission.

Compulsory process means any subpoena, order, or other demand of a court or other authority (e.g., an administrative agency or a state or local legislative body) for the appearance of a PBGC employee or former employee.

Employee means any officer or employee of the PBGC, including a special government employee.

Proceeding means any proceeding before any federal, state, or local court; federal, state, or local agency; state or local legislature; or other authority responsible for administering regulatory requirements or adjudicating disputes or controversies, including arbitration, mediation, and other similar proceedings.

Special government employee means an employee of the PBGC who is retained, designated, appointed or employed to perform, with or without compensation, for not to exceed one hundred and thirty days during any three hundred and sixty-five consecutive days, temporary duties either on a full-time or intermittent basis (18 U.S.C. 202).

§ 4905.3 General.

No PBGC employee or former employee may appear in any proceeding to which this part applies to testify and/or produce documents or other material unless authorized under this part.

§ 4905.4 Appearances by PBGC employees.

(a) Whenever a PBGC employee or former employee is requested or served with compulsory process to appear in a proceeding to which this part applies, he or she will promptly notify the General Counsel.

(b) The General Counsel or his or her designee will authorize an appearance by a PBGC employee or former employee if, and to the extent, he or she determines that such appearance is in the interest of the PBGC.

(1) In determining whether an appearance is in the interest of the PBGC, the General Counsel or his or her designee will consider relevant factors, including:

(i) What, if any, objective of the PBGC (and, where relevant, any federal agency, if the United States is a party) would be promoted by the appearance;

(ii) Whether the appearance would unnecessarily interfere with the employee's official duties;

(iii) Whether the appearance would result in the appearance of improperly favoring one litigant over another; and

(iv) Whether the appearance is appropriate under applicable substantive and procedural rules.

(2) If the General Counsel or his or her designee concludes that compulsory process is essentially a request for PBGC record information, it will be treated as a request under the Freedom of Information Act, as amended, in accordance with part 4901 of this chapter, except to the extent that the Privacy Act of 1974, as amended, and part 4902 of this chapter govern disclosure of a record maintained on an individual.

(c) If, in response to compulsory process in a proceeding to which this part applies, the General Counsel or his or her designee has not authorized an appearance by the return date, the employee or former employee shall appear at the stated time and place (unless advised by the General Counsel or his or her designee that process either was not validly issued or served or has been withdrawn), accompanied by a PBGC attorney, produce a copy of this part of the regulations, and respectfully decline to provide any testimony or produce any documents or other material. When the demand is under consideration, the employee shall respectfully request that the court or other authority stay the demand pending the employee's receipt of instructions from the General Counsel.

§ 4905.5 Requests for authenticated copies of PBGC records.

The PBGC will grant requests for authenticated copies of PBGC records, for purposes of admissibility under 28 U.S.C. 1733 and Rule 44 of the Federal Rules of Civil Procedure, for records that are to be disclosed pursuant to this part or part 4901 of this chapter. Appropriate fees will be charged for providing authenticated copies of PBGC records, in accordance with part 4901, subpart D, of this chapter.

§ 4905.6 Penalty.

A PBGC employee who testifies or produces documents or other material in violation of a provision of this part of the regulations shall be subject to disciplinary action.

PART 4906 [RESERVED]

PART 4907—ENFORCEMENT OF NONDISCRIMINATION ON THE BASIS OF HANDICAP IN PROGRAMS OR ACTIVITIES CONDUCTED BY THE PENSION BENEFIT GUARANTY CORPORATION

Sec.

4907.101 Purpose.
4907.102 Application.
4907.103 Definitions.
4907.104–4907.109 [Reserved]
4907.110 Self-evaluation.
4907.111 Notice.
4907.112–4907.129 [Reserved]
4907.130 General prohibitions against discrimination.
4907.131–4907.139 [Reserved]
4907.140 Employment.
4907.141–4907.148 [Reserved]
4907.149 Program accessibility: Discrimination prohibited.
4907.150 Program accessibility: Existing facilities.
4907.151 Program accessibility: New construction and alterations.
4907.152–4907.159 [Reserved]
4907.160 Communications.
4907.161–4907.169 [Reserved]
4907.170 Compliance procedures.
4907.171–4907.999 [Reserved]

AUTHORITY: 29 U.S.C. 794, 1302(b)(3).

SOURCE: 61 FR 34134, July 1, 1996, unless otherwise noted.

§ 4907.101 Purpose.

This part effectuates section 119 of the Rehabilitation, Comprehensive Services, and Developmental Disabilities Amendments of 1978, which amended section 504 of the Rehabilitation Act of 1973 to prohibit discrimination on the basis of handicap in programs or activities conducted by Executive agencies or the United States Postal Service.

§ 4907.102 Application.

This part applies to all programs or activities conducted by the agency.

§ 4907.103 Definitions.

For purposes of this part, the term—

Assistant Attorney General means the Assistant Attorney General, Civil Rights Division, United States Department of Justice.

Auxiliary aids means services or devices that enable persons with impaired sensory, manual, or speaking

skills to have an equal opportunity to participate in, and enjoy the benefits of, programs or activities conducted by the agency. For example, auxiliary aids useful for persons with impaired vision include readers, brailled materials, audio recordings, telecommunications devices and other similar services and devices. Auxiliary aids useful for persons with impaired hearing include telephone handset amplifiers, telephones compatible with hearing aids, telecommunication devices for deaf persons (TDD's), interpreters, notetakers, written materials, and other similar services and devices.

Complete complaint means a written statement that contains the complainant's name and address and describes the agency's alleged discriminatory action in sufficient detail to inform the agency of the nature and date of the alleged violation of section 504. It shall be signed by the complainant or by someone authorized to do so on his or her behalf. Complaints filed on behalf of classes or third parties shall describe or identify (by name, if possible) the alleged victims of discrimination.

Facility means all or any portion of buildings, structures, equipment, roads, walks, parking lots, rolling stock or other conveyances, or other real or personal property.

Handicapped person means any person who has a physical or mental impairment that substantially limits one or more major life activities, has a record of such an impairment, or is regarded as having such an impairment.

As used in this definition, the phrase:

(1) *Physical or mental impairment* includes—

(i) Any physiological disorder or condition, cosmetic disfigurement, or anatomical loss affecting one or more of the following body systems: Neurological; musculoskeletal; special sense organs; respiratory, including speech organs; cardiovascular; reproductive; digestive; genitourinary; hemic and lymphatic; skin; and endocrine; or

(ii) Any mental or psychological disorder, such as mental retardation, organic brain syndrome, emotional or mental illness, and specific learning disabilities. The term ''physical or mental impairment'' includes, but is not limited to, such diseases and conditions as orthopedic, visual, speech, and hearing impairments, cerebral palsy, epilepsy, muscular dystrophy, multiple sclerosis, cancer, heart disease, diabetes, mental retardation, emotional illness, and drug addiction and alcoholism.

(2) Major life activities includes functions such as caring for one's self, performing manual tasks, walking, seeing, hearing, speaking, breathing, learning, and working.

(3) *Has a record of such an impairment* means has a history of, or has been misclassified as having, a mental or physical impairment that substantially limits one or more major life activities.

(4) *Is regarded as having an impairment* means—

(i) Has a physical or mental impairment that does not substantially limit major life activities but is treated by the agency as constituting such a limitation;

(ii) Has a physical or mental impairment that substantially limits major life activities only as a result of the attitudes of others toward such impairment; or

(iii) Has none of the impairments defined in subparagraph (1) of this definition but is treated by the agency as having such an impairment.

Historic preservation programs means programs conducted by the agency that have preservation of historic properties as a primary purpose.

Historic properties means those properties that are listed or eligible for listing in the National Register of Historic Places or properties designated as historic under a statute of the appropriate State or local government body.

Qualified handicapped person means—

(1) With respect to preschool, elementary, or secondary education services provided by the agency, a handicapped person who is a member of a class of persons otherwise entitled by statute, regulation, or agency policy to receive education services from the agency.

(2) With respect to any other agency program or activity under which a person is required to perform services or to achieve a level of accomplishment, a handicapped person who meets the essential eligibility requirements and

who can achieve the purpose of the program or activity without modifications in the program or activity that the agency can demonstrate would result in a fundamental alteration in its nature;

(3) With respect to any other program or activity, a handicapped person who meets the essential eligibility requirements for participation in, or receipt of benefits from, that program or activity; and

(4) Qualified handicapped person is defined for purposes of employment in 29 CFR 1613.702(f), which is made applicable to this part by § 4907.140.

Section 504 means section 504 of the Rehabilitation Act of 1973 (Pub. L. 93–112, 87 Stat. 394 (29 U.S.C. 794)), as amended by the Rehabilitation Act Amendments of 1974 (Pub. L. 93–516, 88 Stat. 1617), and the Rehabilitation, Comprehensive Services, and Developmental Disabilities Amendments of 1978 (Pub. L. 95–602, 92 Stat. 2955). As used in this part, section 504 applies only to programs or activities conducted by Executive agencies and not to federally assisted programs.

Substantial impairment means a significant loss of the integrity of finished materials, design quality, or special character resulting from a permanent alteration.

§§ 4907.104–4907.109 [Reserved]

§ 4907.110 Self-evaluation.

(a) The agency shall, by August 24, 1987, evaluate its current policies and practices, and the effects thereof, that do not or may not meet the requirements of this part, and, to the extent modification of any such policies and practices is required, the agency shall proceed to make the necessary modifications.

(b) The agency shall provide an opportunity to interested persons, including handicapped persons or organizations representing handicapped persons, to participate in the self-evaluation process by submitting comments (both oral and written).

(c) The agency shall, until three years following the completion of the self-evaluation, maintain on file and make available for public inspection:

(1) A description of areas examined and any problems identified, and

(2) A description of any modifications made.

§ 4907.111 Notice.

The agency shall make available to employees, applicants, participants, beneficiaries, and other interested persons such information regarding the provisions of this part and its applicability to the programs or activities conducted by the agency, and make such information available to them in such manner as the head of the agency finds necessary to apprise such persons of the protections against discrimination assured them by section 504 and this regulation.

§§ 4907.112–4907.129 [Reserved]

§ 4907.130 General prohibitions against discrimination.

(a) No qualified handicapped person shall, on the basis of handicap, be excluded from participation in, be denied the benefits of, or otherwise be subjected to discrimination under any program or activity conducted by the agency.

(b)(1) The agency, in providing any aid, benefit, or service, may not, directly or through contractual, licensing, or other arrangements, on the basis of handicap—

(i) Deny a qualified handicapped person the opportunity to participate in or benefit from the aid, benefit, or service;

(ii) Afford a qualified handicapped person an opportunity to participate in or benefit from the aid, benefit, or service that is not equal to that afforded others;

(iii) Provide a qualified handicapped person with an aid, benefit, or service that is not as effective in affording equal opportunity to obtain the same result, to gain the same benefit, or to reach the same level of achievement as that provided to others;

(iv) Provide different or separate aid, benefits, or services to handicapped persons or to any class of handicapped persons than is provided to others unless such action is necessary to provide qualified handicapped persons with aid,

benefits, or services that are as effective as those provided to others;

(v) Deny a qualified handicapped person the opportunity to participate as a member of planning or advisory boards; or

(vi) Otherwise limit a qualified handicapped person in the enjoyment of any right, privilege, advantage, or opportunity enjoyed by others receiving the aid, benefit, or service.

(2) The agency may not deny a qualified handicapped person the opportunity to participate in programs or activities that are not separate or different, despite the existence of permissibly separate or different programs or activities.

(3) The agency may not, directly or through contractual or other arrangements, utilize criteria or methods of administration the purpose or effect of which would—

(i) Subject qualified handicapped persons to discrimination on the basis of handicap; or

(ii) Defeat or substantially impair accomplishment of the objectives of a program or activity with respect to handicapped persons.

(4) The agency may not, in determining the site or location of a facility, make selections the purpose or effect of which would—

(i) Exclude handicapped persons from, deny them the benefits of, or otherwise subject them to discrimination under any program or activity conducted by the agency; or

(ii) Defeat or substantially impair the accomplishment of the objectives of a program or activity with respect to handicapped persons.

(5) The agency, in the selection of procurement contractors, may not use criteria that subject qualified handicapped persons to discrimination on the basis of handicap.

(6) The agency may not administer a licensing or certification program in a manner that subjects qualified handicapped persons to discrimination on the basis of handicap, nor may the agency establish requirements for the programs or activities of licensees or certified entities that subject qualified handicapped persons to discrimination on the basis of handicap. However, the programs or activities of entities that are licensed or certified by the agency are not, themselves, covered by this part.

(c) The exclusion of nonhandicapped persons from the benefits of a program limited by Federal statute or Executive Order to handicapped persons or the exclusion of a specific class of handicapped persons from a program limited by Federal statute or Executive Order to a different class of handicapped persons is not prohibited by this part.

(d) The agency shall administer programs and activities in the most integrated setting appropriate to the needs of qualified handicapped persons.

§§ 4907.131–4907.139 [Reserved]

§ 4907.140 Employment.

No qualified handicapped person shall, on the basis of handicap, be subjected to discrimination in employment under any program or activity conducted by the agency. The definitions, requirements, and procedures of section 501 of the Rehabilitation Act of 1973 (29 U.S.C. 791), as established by the Equal Employment Opportunity Commission in 29 CFR part 1613, shall apply to employment in federally-conducted programs or activities.

§§ 4907.141–4907.148 [Reserved]

§ 4907.149 Program accessibility: Discrimination prohibited.

Except as otherwise provided in §4907.150, no qualified handicapped person shall, because the agency's facilities are inaccessible to or unusable by handicapped persons, be denied the benefits of, be excluded from participation in, or otherwise be subjected to discrimination under any program or activity conducted by the agency.

§ 4907.150 Program accessibility: Existing facilities.

(a) *General.* The agency shall operate each program or activity so that the program or activity, when viewed in its entirety, is readily accessible to and usable by handicapped persons. This paragraph does not—

(1) Necessarily require the agency to make each of its existing facilities accessible to and usable by handicapped persons;

(2) In the case of historic preservation programs, require the agency to take any action that would result in a substantial impairment of significant historic features of an historic property; or

(3) Require the agency to take any action that it can demonstrate would result in a fundamental alteration in the nature of a program or activity or in undue financial and administrative burdens. In those circumstances where agency personnel believe that the proposed action would fundamentally alter the program or activity or would result in undue financial and administrative burdens, the agency has the burden of proving that compliance with § 4907.150(a) would result in such alteration or burdens. The decision that compliance would result in such alteration or burdens must be made by the agency head or his or her designee after considering all agency resources available for use in the funding and operation of the conducted program or activity, and must be accompanied by a written statement of the reasons for reaching that conclusion. If an action would result in such an alteration or such burdens, the agency shall take any other action that would not result in such an alteration or such burdens but would nevertheless ensure that handicapped persons receive the benefits and services of the program or activity.

(b) *Methods*—(1) *General*. The agency may comply with the requirements of this section through such means as redesign of equipment, reassignment of services to accessible buildings, assignment of aides to beneficiaries, home visits, delivery of services at alternate accessible sites, alteration of existing facilities and construction of new facilities, use of accessible rolling stock, or any other methods that result in making its programs or activities readily accessible to and usable by handicapped persons. The agency is not required to make structural changes in existing facilities where other methods are effective in achieving compliance with this section. The agency, in making alterations to existing buildings, shall meet accessibility requirements to the extent compelled by the Architectural Barriers Act of 1968, as amended (42 U.S.C. 4151–4157), and any regulations implementing it. In choosing among available methods for meeting the requirements of this section, the agency shall give priority to those methods that offer programs and activities to qualified handicapped persons in the most integrated setting appropriate.

(2) *Historic preservation programs*. In meeting the requirements of § 4907.150(a) in historic preservation programs, the agency shall give priority to methods that provide physical access to handicapped persons. In cases where a physical alteration to an historic property is not required because of § 4907.150 (a)(2) or (a)(3), alternative methods of achieving program accessibility include—

(i) Using audio-visual materials and devices to depict those portions of an historic property that cannot otherwise be made accessible;

(ii) Assigning persons to guide handicapped persons into or through portions of historic properties that cannot otherwise be made accessible; or

(iii) Adopting other innovative methods.

(c) *Time period for compliance*. The agency shall comply with the obligations established under this section by October 21, 1986, except that where structural changes in facilities are undertaken, such changes shall be made by August 22, 1989, but in any event as expeditiously as possible.

(d) *Transition plan*. In the event that structural changes to facilities will be undertaken to achieve program accessibility, the agency shall develop, by February 23, 1987 a transition plan setting forth the steps necessary to complete such changes. The agency shall provide an opportunity to interested persons, including handicapped persons or organizations representing handicapped persons, to participate in the development of the transition plan by submitting comments (both oral and written). A copy of the transition plan shall be made available for public inspection. The plan shall, at a minimum—

(1) Identify physical obstacles in the agency's facilities that limit the accessibility of its programs or activities to handicapped persons;

(2) Describe in detail the methods that will be used to make the facilities accessible;

(3) Specify the schedule for taking the steps necessary to achieve compliance with this section and, if the time period of the transition plan is longer than one year, identify steps that will be taken during each year of the transition period; and

(4) Indicate the official responsible for implementation of the plan.

§4907.151 Program accessibility: New construction and alterations.

Each building or part of a building that is constructed or altered by, on behalf of, or for the use of the agency shall be designed, constructed, or altered so as to be readily accessible to and usable by handicapped persons. The definitions, requirements, and standards of the Architectural Barriers Act (42 U.S.C. 4151–4157), as established in 41 CFR 101–19.600 to 101–19.607, apply to buildings covered by this section.

§§4907.152–4907.159 [Reserved]

§4907.160 Communications.

(a) The agency shall take appropriate steps to ensure effective communication with applicants, participants, personnel of other Federal entities, and members of the public.

(1) The agency shall furnish appropriate auxiliary aids where necessary to afford a handicapped person an equal opportunity to participate in, and enjoy the benefits of, a program or activity conducted by the agency.

(i) In determining what type of auxiliary aid is necessary, the agency shall give primary consideration to the requests of the handicapped person.

(ii) The agency need not provide individually prescribed devices, readers for personal use or study, or other devices of a personal nature.

(2) Where the agency communicates with applicants and beneficiaries by telephone, telecommunication devices for deaf person (TDD's) or equally effective telecommunication systems shall be used.

(b) The agency shall ensure that interested persons, including persons with impaired vision or hearing, can obtain information as to the existence and location of accessible services, activities, and facilities.

(c) The agency shall provide signage at a primary entrance to each of its inaccessible facilities, directing users to a location at which they can obtain information about accessible facilities. The international symbol for accessibility shall be used at each primary entrance of an accessible facility.

(d) This section does not require the agency to take any action that it can demonstrate would result in a fundamental alteration in the nature of a program or activity or in undue financial and administrative burdens. In those circumstances where agency personnel believe that the proposed action would fundamentally alter the program or activity or would result in undue financial and administrative burdens, the agency has the burden of proving that compliance with §4907.160 would result in such alteration or burdens. The decision that compliance would result in such alteration or burdens must be made by the agency head or his or her designee after considering all agency resources available for use in the funding and operation of the conducted program or activity, and must be accompanied by a written statement of the reasons for reaching that conclusion. If an action required to comply with this section would result in such an alteration or such burdens, the agency shall take any other action that would not result in such an alteration or such burdens but would nevertheless ensure that, to the maximum extent possible, handicapped persons receive the benefits and services of the program or activity.

§§4907.161–4907.169 [Reserved]

§4907.170 Compliance procedures.

(a) Except as provided in paragraph (b) of this section, this section applies to all allegations of discrimination on the basis of handicap in programs or activities conducted by the agency.

(b) The agency shall process complaints alleging violations of section 504 with respect to employment according to the procedures established by the Equal Employment Opportunity

Commission in 29 CFR part 1613 pursuant to section 501 of the Rehabilitation Act of 1973 (29 U.S.C. 791).

(c) The Equal Opportunity Manager shall be responsible for coordinating implementation of this section.

(1) *Where to file.* See § 4000.4 of this chapter for information on where to file complaints under this part.

(2) *Method of filing.* The PBGC applies the rules in subpart A of part 4000 of this chapter to determine permissible methods of filing with the PBGC under this part.

(3) *Date of filing.* The PBGC applies the rules in subpart C of part 4000 of this chapter to determine the date that a submission under this part was filed with the PBGC.

(4) *Computation of time.* The PBGC applies the rules in subpart D of part 4000 of this chapter to compute any time period under this part.

(d) The agency shall accept and investigate all complete complaints for which it has jurisdiction. All complete complaints must be filed within 180 days of the alleged act of discrimination. The agency may extend this time period for good cause.

(e) If the agency receives a complaint over which it does not have jurisdiction, it shall promptly notify the complainant and shall make reasonable efforts to refer the complaint to the appropriate government entity.

(f) The agency shall notify the Architectural and Transportation Barriers Compliance Board upon receipt of any complaint alleging that a building or facility that is subject to the Architectural Barriers Act of 1968, as amended (42 U.S.C. 4151–4157), or section 502 of the Rehabilitation Act of 1973, as amended (29 U.S.C. 792), is not readily accessible to and usable by handicapped persons.

(g) Within 180 days of the receipt of a complete complaint for which it has jurisdiction, the agency shall notify the complainant of the results of the investigation in a letter containing—

(1) Findings of fact and conclusions of law;

(2) A description of a remedy for each violation found; and

(3) A notice of the right to appeal.

(h) Appeals of the findings of fact and conclusions of law or remedies must be filed by the complainant within 90 days of receipt from the agency of the letter required by § 4907.170(g). The agency may extend this time for good cause.

(i) Timely appeals shall be accepted and processed by the head of the agency.

(j) The head of the agency shall notify the complainant of the results of the appeal within 60 days of the receipt of the request. If the head of the agency determines that additional information is needed from the complainant, he or she shall have 60 days from the date of receipt of the additional information to make his or her determination on the appeal.

(k) The time limits cited in paragraphs (g) and (j) of this section may be extended with the permission of the Assistant Attorney General.

(l) The agency may delegate its authority for conducting complaint investigations to other Federal agencies, except that the authority for making the final determination may not be delegated to another agency.

[61 FR 34134, July 1, 1996, as amended at 68 FR 61359, Oct. 28, 2003]

§§ 4907.171–4907.999 [Reserved]

PARTS 4908–4999 [RESERVED]

FINDING AIDS

A list of CFR titles, subtitles, chapters, subchapters and parts and an alphabetical list of agencies publishing in the CFR are included in the CFR Index and Finding Aids volume to the Code of Federal Regulations which is published separately and revised annually.

Table of CFR Titles and Chapters
Alphabetical List of Agencies Appearing in the CFR
List of CFR Sections Affected

Table of CFR Titles and Chapters

(Revised as of July 1, 2014)

Title 1—General Provisions

I Administrative Committee of the Federal Register (Parts 1—49)
II Office of the Federal Register (Parts 50—299)
III Administrative Conference of the United States (Parts 300—399)
IV Miscellaneous Agencies (Parts 400—500)

Title 2—Grants and Agreements

SUBTITLE A—OFFICE OF MANAGEMENT AND BUDGET GUIDANCE FOR GRANTS AND AGREEMENTS
I Office of Management and Budget Governmentwide Guidance for Grants and Agreements (Parts 2—199)
II Office of Management and Budget Guidance (200—299)
SUBTITLE B—FEDERAL AGENCY REGULATIONS FOR GRANTS AND AGREEMENTS
III Department of Health and Human Services (Parts 300—399)
IV Department of Agriculture (Parts 400—499)
VI Department of State (Parts 600—699)
VII Agency for International Development (Parts 700—799)
VIII Department of Veterans Affairs (Parts 800—899)
IX Department of Energy (Parts 900—999)
XI Department of Defense (Parts 1100—1199)
XII Department of Transportation (Parts 1200—1299)
XIII Department of Commerce (Parts 1300—1399)
XIV Department of the Interior (Parts 1400—1499)
XV Environmental Protection Agency (Parts 1500—1599)
XVIII National Aeronautics and Space Administration (Parts 1800—1899)
XX United States Nuclear Regulatory Commission (Parts 2000—2099)
XXII Corporation for National and Community Service (Parts 2200—2299)
XXIII Social Security Administration (Parts 2300—2399)
XXIV Housing and Urban Development (Parts 2400—2499)
XXV National Science Foundation (Parts 2500—2599)
XXVI National Archives and Records Administration (Parts 2600—2699)
XXVII Small Business Administration (Parts 2700—2799)
XXVIII Department of Justice (Parts 2800—2899)

Title 2—Grants and Agreements—Continued

Chap.	
XXX	Department of Homeland Security (Parts 3000—3099)
XXXI	Institute of Museum and Library Services (Parts 3100—3199)
XXXII	National Endowment for the Arts (Parts 3200—3299)
XXXIII	National Endowment for the Humanities (Parts 3300—3399)
XXXIV	Department of Education (Parts 3400—3499)
XXXV	Export-Import Bank of the United States (Parts 3500—3599)
XXXVII	Peace Corps (Parts 3700—3799)
LVIII	Election Assistance Commission (Parts 5800—5899)

Title 3—The President

I	Executive Office of the President (Parts 100—199)

Title 4—Accounts

I	Government Accountability Office (Parts 1—199)
II	Recovery Accountability and Transparency Board (Parts 200—299)

Title 5—Administrative Personnel

I	Office of Personnel Management (Parts 1—1199)
II	Merit Systems Protection Board (Parts 1200—1299)
III	Office of Management and Budget (Parts 1300—1399)
V	The International Organizations Employees Loyalty Board (Parts 1500—1599)
VI	Federal Retirement Thrift Investment Board (Parts 1600—1699)
VIII	Office of Special Counsel (Parts 1800—1899)
IX	Appalachian Regional Commission (Parts 1900—1999)
XI	Armed Forces Retirement Home (Parts 2100—2199)
XIV	Federal Labor Relations Authority, General Counsel of the Federal Labor Relations Authority and Federal Service Impasses Panel (Parts 2400—2499)
XV	Office of Administration, Executive Office of the President (Parts 2500—2599)
XVI	Office of Government Ethics (Parts 2600—2699)
XXI	Department of the Treasury (Parts 3100—3199)
XXII	Federal Deposit Insurance Corporation (Parts 3200—3299)
XXIII	Department of Energy (Parts 3300—3399)
XXIV	Federal Energy Regulatory Commission (Parts 3400—3499)
XXV	Department of the Interior (Parts 3500—3599)
XXVI	Department of Defense (Parts 3600— 3699)
XXVIII	Department of Justice (Parts 3800—3899)
XXIX	Federal Communications Commission (Parts 3900—3999)
XXX	Farm Credit System Insurance Corporation (Parts 4000—4099)
XXXI	Farm Credit Administration (Parts 4100—4199)

Title 5—Administrative Personnel—Continued

Chap.	
XXXIII	Overseas Private Investment Corporation (Parts 4300—4399)
XXXIV	Securities and Exchange Commission (Parts 4400—4499)
XXXV	Office of Personnel Management (Parts 4500—4599)
XXXVII	Federal Election Commission (Parts 4700—4799)
XL	Interstate Commerce Commission (Parts 5000—5099)
XLI	Commodity Futures Trading Commission (Parts 5100—5199)
XLII	Department of Labor (Parts 5200—5299)
XLIII	National Science Foundation (Parts 5300—5399)
XLV	Department of Health and Human Services (Parts 5500—5599)
XLVI	Postal Rate Commission (Parts 5600—5699)
XLVII	Federal Trade Commission (Parts 5700—5799)
XLVIII	Nuclear Regulatory Commission (Parts 5800—5899)
XLIX	Federal Labor Relations Authority (Parts 5900—5999)
L	Department of Transportation (Parts 6000—6099)
LII	Export-Import Bank of the United States (Parts 6200—6299)
LIII	Department of Education (Parts 6300—6399)
LIV	Environmental Protection Agency (Parts 6400—6499)
LV	National Endowment for the Arts (Parts 6500—6599)
LVI	National Endowment for the Humanities (Parts 6600—6699)
LVII	General Services Administration (Parts 6700—6799)
LVIII	Board of Governors of the Federal Reserve System (Parts 6800—6899)
LIX	National Aeronautics and Space Administration (Parts 6900—6999)
LX	United States Postal Service (Parts 7000—7099)
LXI	National Labor Relations Board (Parts 7100—7199)
LXII	Equal Employment Opportunity Commission (Parts 7200—7299)
LXIII	Inter-American Foundation (Parts 7300—7399)
LXIV	Merit Systems Protection Board (Parts 7400—7499)
LXV	Department of Housing and Urban Development (Parts 7500—7599)
LXVI	National Archives and Records Administration (Parts 7600—7699)
LXVII	Institute of Museum and Library Services (Parts 7700—7799)
LXVIII	Commission on Civil Rights (Parts 7800—7899)
LXIX	Tennessee Valley Authority (Parts 7900—7999)
LXX	Court Services and Offender Supervision Agency for the District of Columbia (Parts 8000—8099)
LXXI	Consumer Product Safety Commission (Parts 8100—8199)
LXXIII	Department of Agriculture (Parts 8300—8399)
LXXIV	Federal Mine Safety and Health Review Commission (Parts 8400—8499)
LXXVI	Federal Retirement Thrift Investment Board (Parts 8600—8699)
LXXVII	Office of Management and Budget (Parts 8700—8799)
LXXX	Federal Housing Finance Agency (Parts 9000—9099)
LXXXIII	Special Inspector General for Afghanistan Reconstruction (Parts 9300—9399)

Title 5—Administrative Personnel—Continued

Chap.

LXXXIV Bureau of Consumer Financial Protection (Parts 9400—9499)

LXXXVI National Credit Union Administration (9600—9699)

XCVII Department of Homeland Security Human Resources Management System (Department of Homeland Security—Office of Personnel Management) (Parts 9700—9799)

XCVII Council of the Inspectors General on Integrity and Efficiency (Parts 9800—9899)

Title 6—Domestic Security

I Department of Homeland Security, Office of the Secretary (Parts 1—99)

X Privacy and Civil Liberties Oversight Board (Parts 1000—1099)

Title 7—Agriculture

SUBTITLE A—OFFICE OF THE SECRETARY OF AGRICULTURE (PARTS 0—26)

SUBTITLE B—REGULATIONS OF THE DEPARTMENT OF AGRICULTURE

I Agricultural Marketing Service (Standards, Inspections, Marketing Practices), Department of Agriculture (Parts 27—209)

II Food and Nutrition Service, Department of Agriculture (Parts 210—299)

III Animal and Plant Health Inspection Service, Department of Agriculture (Parts 300—399)

IV Federal Crop Insurance Corporation, Department of Agriculture (Parts 400—499)

V Agricultural Research Service, Department of Agriculture (Parts 500—599)

VI Natural Resources Conservation Service, Department of Agriculture (Parts 600—699)

VII Farm Service Agency, Department of Agriculture (Parts 700—799)

VIII Grain Inspection, Packers and Stockyards Administration (Federal Grain Inspection Service), Department of Agriculture (Parts 800—899)

IX Agricultural Marketing Service (Marketing Agreements and Orders; Fruits, Vegetables, Nuts), Department of Agriculture (Parts 900—999)

X Agricultural Marketing Service (Marketing Agreements and Orders; Milk), Department of Agriculture (Parts 1000—1199)

XI Agricultural Marketing Service (Marketing Agreements and Orders; Miscellaneous Commodities), Department of Agriculture (Parts 1200—1299)

XIV Commodity Credit Corporation, Department of Agriculture (Parts 1400—1499)

XV Foreign Agricultural Service, Department of Agriculture (Parts 1500—1599)

XVI Rural Telephone Bank, Department of Agriculture (Parts 1600—1699)

Title 7—Agriculture—Continued

Chap.	
XVII	Rural Utilities Service, Department of Agriculture (Parts 1700—1799)
XVIII	Rural Housing Service, Rural Business-Cooperative Service, Rural Utilities Service, and Farm Service Agency, Department of Agriculture (Parts 1800—2099)
XX	Local Television Loan Guarantee Board (Parts 2200—2299)
XXV	Office of Advocacy and Outreach, Department of Agriculture (Parts 2500—2599)
XXVI	Office of Inspector General, Department of Agriculture (Parts 2600—2699)
XXVII	Office of Information Resources Management, Department of Agriculture (Parts 2700—2799)
XXVIII	Office of Operations, Department of Agriculture (Parts 2800—2899)
XXIX	Office of Energy Policy and New Uses, Department of Agriculture (Parts 2900—2999)
XXX	Office of the Chief Financial Officer, Department of Agriculture (Parts 3000—3099)
XXXI	Office of Environmental Quality, Department of Agriculture (Parts 3100—3199)
XXXII	Office of Procurement and Property Management, Department of Agriculture (Parts 3200—3299)
XXXIII	Office of Transportation, Department of Agriculture (Parts 3300—3399)
XXXIV	National Institute of Food and Agriculture (Parts 3400—3499)
XXXV	Rural Housing Service, Department of Agriculture (Parts 3500—3599)
XXXVI	National Agricultural Statistics Service, Department of Agriculture (Parts 3600—3699)
XXXVII	Economic Research Service, Department of Agriculture (Parts 3700—3799)
XXXVIII	World Agricultural Outlook Board, Department of Agriculture (Parts 3800—3899)
XLI	[Reserved]
XLII	Rural Business-Cooperative Service and Rural Utilities Service, Department of Agriculture (Parts 4200—4299)

Title 8—Aliens and Nationality

I	Department of Homeland Security (Immigration and Naturalization) (Parts 1—499)
V	Executive Office for Immigration Review, Department of Justice (Parts 1000—1399)

Title 9—Animals and Animal Products

I	Animal and Plant Health Inspection Service, Department of Agriculture (Parts 1—199)

Title 9—Animals and Animal Products—Continued

Chap.

II Grain Inspection, Packers and Stockyards Administration (Packers and Stockyards Programs), Department of Agriculture (Parts 200—299)

III Food Safety and Inspection Service, Department of Agriculture (Parts 300—599)

Title 10—Energy

I Nuclear Regulatory Commission (Parts 0—199)

II Department of Energy (Parts 200—699)

III Department of Energy (Parts 700—999)

X Department of Energy (General Provisions) (Parts 1000—1099)

XIII Nuclear Waste Technical Review Board (Parts 1300—1399)

XVII Defense Nuclear Facilities Safety Board (Parts 1700—1799)

XVIII Northeast Interstate Low-Level Radioactive Waste Commission (Parts 1800—1899)

Title 11—Federal Elections

I Federal Election Commission (Parts 1—9099)

II Election Assistance Commission (Parts 9400—9499)

Title 12—Banks and Banking

I Comptroller of the Currency, Department of the Treasury (Parts 1—199)

II Federal Reserve System (Parts 200—299)

III Federal Deposit Insurance Corporation (Parts 300—399)

IV Export-Import Bank of the United States (Parts 400—499)

V Office of Thrift Supervision, Department of the Treasury (Parts 500—599)

VI Farm Credit Administration (Parts 600—699)

VII National Credit Union Administration (Parts 700—799)

VIII Federal Financing Bank (Parts 800—899)

IX Federal Housing Finance Board (Parts 900—999)

X Bureau of Consumer Financial Protection (Parts 1000—1099)

XI Federal Financial Institutions Examination Council (Parts 1100—1199)

XII Federal Housing Finance Agency (Parts 1200—1299)

XIII Financial Stability Oversight Council (Parts 1300—1399)

XIV Farm Credit System Insurance Corporation (Parts 1400—1499)

XV Department of the Treasury (Parts 1500—1599)

XVI Office of Financial Research (Parts 1600—1699)

XVII Office of Federal Housing Enterprise Oversight, Department of Housing and Urban Development (Parts 1700—1799)

XVIII Community Development Financial Institutions Fund, Department of the Treasury (Parts 1800—1899)

Title 13—Business Credit and Assistance

Chap.

I Small Business Administration (Parts 1—199)

III Economic Development Administration, Department of Commerce (Parts 300—399)

IV Emergency Steel Guarantee Loan Board (Parts 400—499)

V Emergency Oil and Gas Guaranteed Loan Board (Parts 500—599)

Title 14—Aeronautics and Space

I Federal Aviation Administration, Department of Transportation (Parts 1—199)

II Office of the Secretary, Department of Transportation (Aviation Proceedings) (Parts 200—399)

III Commercial Space Transportation, Federal Aviation Administration, Department of Transportation (Parts 400—1199)

V National Aeronautics and Space Administration (Parts 1200—1299)

VI Air Transportation System Stabilization (Parts 1300—1399)

Title 15—Commerce and Foreign Trade

SUBTITLE A—OFFICE OF THE SECRETARY OF COMMERCE (PARTS 0—29)

SUBTITLE B—REGULATIONS RELATING TO COMMERCE AND FOREIGN TRADE

I Bureau of the Census, Department of Commerce (Parts 30—199)

II National Institute of Standards and Technology, Department of Commerce (Parts 200—299)

III International Trade Administration, Department of Commerce (Parts 300—399)

IV Foreign-Trade Zones Board, Department of Commerce (Parts 400—499)

VII Bureau of Industry and Security, Department of Commerce (Parts 700—799)

VIII Bureau of Economic Analysis, Department of Commerce (Parts 800—899)

IX National Oceanic and Atmospheric Administration, Department of Commerce (Parts 900—999)

XI Technology Administration, Department of Commerce (Parts 1100—1199)

XIII East-West Foreign Trade Board (Parts 1300—1399)

XIV Minority Business Development Agency (Parts 1400—1499)

SUBTITLE C—REGULATIONS RELATING TO FOREIGN TRADE AGREEMENTS

XX Office of the United States Trade Representative (Parts 2000—2099)

SUBTITLE D—REGULATIONS RELATING TO TELECOMMUNICATIONS AND INFORMATION

XXIII National Telecommunications and Information Administration, Department of Commerce (Parts 2300—2399)

Title 16—Commercial Practices

Chap.

I Federal Trade Commission (Parts 0—999)

II Consumer Product Safety Commission (Parts 1000—1799)

Title 17—Commodity and Securities Exchanges

I Commodity Futures Trading Commission (Parts 1—199)

II Securities and Exchange Commission (Parts 200—399)

IV Department of the Treasury (Parts 400—499)

Title 18—Conservation of Power and Water Resources

I Federal Energy Regulatory Commission, Department of Energy (Parts 1—399)

III Delaware River Basin Commission (Parts 400—499)

VI Water Resources Council (Parts 700—799)

VIII Susquehanna River Basin Commission (Parts 800—899)

XIII Tennessee Valley Authority (Parts 1300—1399)

Title 19—Customs Duties

I U.S. Customs and Border Protection, Department of Homeland Security; Department of the Treasury (Parts 0—199)

II United States International Trade Commission (Parts 200—299)

III International Trade Administration, Department of Commerce (Parts 300—399)

IV U.S. Immigration and Customs Enforcement, Department of Homeland Security (Parts 400—599)

Title 20—Employees' Benefits

I Office of Workers' Compensation Programs, Department of Labor (Parts 1—199)

II Railroad Retirement Board (Parts 200—399)

III Social Security Administration (Parts 400—499)

IV Employees' Compensation Appeals Board, Department of Labor (Parts 500—599)

V Employment and Training Administration, Department of Labor (Parts 600—699)

VI Office of Workers' Compensation Programs, Department of Labor (Parts 700—799)

VII Benefits Review Board, Department of Labor (Parts 800—899)

VIII Joint Board for the Enrollment of Actuaries (Parts 900—999)

IX Office of the Assistant Secretary for Veterans' Employment and Training Service, Department of Labor (Parts 1000—1099)

Title 21—Food and Drugs

Chap.

I Food and Drug Administration, Department of Health and Human Services (Parts 1—1299)

II Drug Enforcement Administration, Department of Justice (Parts 1300—1399)

III Office of National Drug Control Policy (Parts 1400—1499)

Title 22—Foreign Relations

I Department of State (Parts 1—199)

II Agency for International Development (Parts 200—299)

III Peace Corps (Parts 300—399)

IV International Joint Commission, United States and Canada (Parts 400—499)

V Broadcasting Board of Governors (Parts 500—599)

VII Overseas Private Investment Corporation (Parts 700—799)

IX Foreign Service Grievance Board (Parts 900—999)

X Inter-American Foundation (Parts 1000—1099)

XI International Boundary and Water Commission, United States and Mexico, United States Section (Parts 1100—1199)

XII United States International Development Cooperation Agency (Parts 1200—1299)

XIII Millennium Challenge Corporation (Parts 1300—1399)

XIV Foreign Service Labor Relations Board; Federal Labor Relations Authority; General Counsel of the Federal Labor Relations Authority; and the Foreign Service Impasse Disputes Panel (Parts 1400—1499)

XV African Development Foundation (Parts 1500—1599)

XVI Japan-United States Friendship Commission (Parts 1600—1699)

XVII United States Institute of Peace (Parts 1700—1799)

Title 23—Highways

I Federal Highway Administration, Department of Transportation (Parts 1—999)

II National Highway Traffic Safety Administration and Federal Highway Administration, Department of Transportation (Parts 1200—1299)

III National Highway Traffic Safety Administration, Department of Transportation (Parts 1300—1399)

Title 24—Housing and Urban Development

SUBTITLE A—OFFICE OF THE SECRETARY, DEPARTMENT OF HOUSING AND URBAN DEVELOPMENT (PARTS 0—99)

SUBTITLE B—REGULATIONS RELATING TO HOUSING AND URBAN DEVELOPMENT

I Office of Assistant Secretary for Equal Opportunity, Department of Housing and Urban Development (Parts 100—199)

Title 24—Housing and Urban Development—Continued

Chap.

II Office of Assistant Secretary for Housing-Federal Housing Commissioner, Department of Housing and Urban Development (Parts 200—299)

III Government National Mortgage Association, Department of Housing and Urban Development (Parts 300—399)

IV Office of Housing and Office of Multifamily Housing Assistance Restructuring, Department of Housing and Urban Development (Parts 400—499)

V Office of Assistant Secretary for Community Planning and Development, Department of Housing and Urban Development (Parts 500—599)

VI Office of Assistant Secretary for Community Planning and Development, Department of Housing and Urban Development (Parts 600—699) [Reserved]

VII Office of the Secretary, Department of Housing and Urban Development (Housing Assistance Programs and Public and Indian Housing Programs) (Parts 700—799)

VIII Office of the Assistant Secretary for Housing—Federal Housing Commissioner, Department of Housing and Urban Development (Section 8 Housing Assistance Programs, Section 202 Direct Loan Program, Section 202 Supportive Housing for the Elderly Program and Section 811 Supportive Housing for Persons With Disabilities Program) (Parts 800—899)

IX Office of Assistant Secretary for Public and Indian Housing, Department of Housing and Urban Development (Parts 900—1699)

X Office of Assistant Secretary for Housing—Federal Housing Commissioner, Department of Housing and Urban Development (Interstate Land Sales Registration Program) (Parts 1700—1799)

XII Office of Inspector General, Department of Housing and Urban Development (Parts 2000—2099)

XV Emergency Mortgage Insurance and Loan Programs, Department of Housing and Urban Development (Parts 2700—2799)

XX Office of Assistant Secretary for Housing—Federal Housing Commissioner, Department of Housing and Urban Development (Parts 3200—3899)

XXIV Board of Directors of the HOPE for Homeowners Program (Parts 4000—4099)

XXV Neighborhood Reinvestment Corporation (Parts 4100—4199)

Title 25—Indians

I Bureau of Indian Affairs, Department of the Interior (Parts 1—299)

II Indian Arts and Crafts Board, Department of the Interior (Parts 300—399)

III National Indian Gaming Commission, Department of the Interior (Parts 500—599)

IV Office of Navajo and Hopi Indian Relocation (Parts 700—799)

V Bureau of Indian Affairs, Department of the Interior, and Indian Health Service, Department of Health and Human Services (Part 900)

Title 25—Indians—Continued

Chap.

VI Office of the Assistant Secretary-Indian Affairs, Department of the Interior (Parts 1000—1199)

VII Office of the Special Trustee for American Indians, Department of the Interior (Parts 1200—1299)

Title 26—Internal Revenue

I Internal Revenue Service, Department of the Treasury (Parts 1—End)

Title 27—Alcohol, Tobacco Products and Firearms

I Alcohol and Tobacco Tax and Trade Bureau, Department of the Treasury (Parts 1—399)

II Bureau of Alcohol, Tobacco, Firearms, and Explosives, Department of Justice (Parts 400—699)

Title 28—Judicial Administration

I Department of Justice (Parts 0—299)

III Federal Prison Industries, Inc., Department of Justice (Parts 300—399)

V Bureau of Prisons, Department of Justice (Parts 500—599)

VI Offices of Independent Counsel, Department of Justice (Parts 600—699)

VII Office of Independent Counsel (Parts 700—799)

VIII Court Services and Offender Supervision Agency for the District of Columbia (Parts 800—899)

IX National Crime Prevention and Privacy Compact Council (Parts 900—999)

XI Department of Justice and Department of State (Parts 1100—1199)

Title 29—Labor

SUBTITLE A—OFFICE OF THE SECRETARY OF LABOR (PARTS 0—99)

SUBTITLE B—REGULATIONS RELATING TO LABOR

I National Labor Relations Board (Parts 100—199)

II Office of Labor-Management Standards, Department of Labor (Parts 200—299)

III National Railroad Adjustment Board (Parts 300—399)

IV Office of Labor-Management Standards, Department of Labor (Parts 400—499)

V Wage and Hour Division, Department of Labor (Parts 500—899)

IX Construction Industry Collective Bargaining Commission (Parts 900—999)

X National Mediation Board (Parts 1200—1299)

XII Federal Mediation and Conciliation Service (Parts 1400—1499)

XIV Equal Employment Opportunity Commission (Parts 1600—1699)

Title 29—Labor—Continued

Chap.

XVII Occupational Safety and Health Administration, Department of Labor (Parts 1900—1999)

XX Occupational Safety and Health Review Commission (Parts 2200—2499)

XXV Employee Benefits Security Administration, Department of Labor (Parts 2500—2599)

XXVII Federal Mine Safety and Health Review Commission (Parts 2700—2799)

XL Pension Benefit Guaranty Corporation (Parts 4000—4999)

Title 30—Mineral Resources

I Mine Safety and Health Administration, Department of Labor (Parts 1—199)

II Bureau of Safety and Environmental Enforcement, Department of the Interior (Parts 200—299)

IV Geological Survey, Department of the Interior (Parts 400—499)

V Bureau of Ocean Energy Management, Department of the Interior (Parts 500—599)

VII Office of Surface Mining Reclamation and Enforcement, Department of the Interior (Parts 700—999)

XII Office of Natural Resources Revenue, Department of the Interior (Parts 1200—1299)

Title 31—Money and Finance: Treasury

SUBTITLE A—OFFICE OF THE SECRETARY OF THE TREASURY (PARTS 0—50)

SUBTITLE B—REGULATIONS RELATING TO MONEY AND FINANCE

I Monetary Offices, Department of the Treasury (Parts 51—199)

II Fiscal Service, Department of the Treasury (Parts 200—399)

IV Secret Service, Department of the Treasury (Parts 400—499)

V Office of Foreign Assets Control, Department of the Treasury (Parts 500—599)

VI Bureau of Engraving and Printing, Department of the Treasury (Parts 600—699)

VII Federal Law Enforcement Training Center, Department of the Treasury (Parts 700—799)

VIII Office of International Investment, Department of the Treasury (Parts 800—899)

IX Federal Claims Collection Standards (Department of the Treasury—Department of Justice) (Parts 900—999)

X Financial Crimes Enforcement Network, Department of the Treasury (Parts 1000—1099)

Title 32—National Defense

SUBTITLE A—DEPARTMENT OF DEFENSE

I Office of the Secretary of Defense (Parts 1—399)

Title 32—National Defense—Continued

Chap.

V Department of the Army (Parts 400—699)

VI Department of the Navy (Parts 700—799)

VII Department of the Air Force (Parts 800—1099)

SUBTITLE B—OTHER REGULATIONS RELATING TO NATIONAL DEFENSE

XII Defense Logistics Agency (Parts 1200—1299)

XVI Selective Service System (Parts 1600—1699)

XVII Office of the Director of National Intelligence (Parts 1700—1799)

XVIII National Counterintelligence Center (Parts 1800—1899)

XIX Central Intelligence Agency (Parts 1900—1999)

XX Information Security Oversight Office, National Archives and Records Administration (Parts 2000—2099)

XXI National Security Council (Parts 2100—2199)

XXIV Office of Science and Technology Policy (Parts 2400—2499)

XXVII Office for Micronesian Status Negotiations (Parts 2700—2799)

XXVIII Office of the Vice President of the United States (Parts 2800—2899)

Title 33—Navigation and Navigable Waters

I Coast Guard, Department of Homeland Security (Parts 1—199)

II Corps of Engineers, Department of the Army (Parts 200—399)

IV Saint Lawrence Seaway Development Corporation, Department of Transportation (Parts 400—499)

Title 34—Education

SUBTITLE A—OFFICE OF THE SECRETARY, DEPARTMENT OF EDUCATION (PARTS 1—99)

SUBTITLE B—REGULATIONS OF THE OFFICES OF THE DEPARTMENT OF EDUCATION

I Office for Civil Rights, Department of Education (Parts 100—199)

II Office of Elementary and Secondary Education, Department of Education (Parts 200—299)

III Office of Special Education and Rehabilitative Services, Department of Education (Parts 300—399)

IV Office of Vocational and Adult Education, Department of Education (Parts 400—499)

V Office of Bilingual Education and Minority Languages Affairs, Department of Education (Parts 500—599)

VI Office of Postsecondary Education, Department of Education (Parts 600—699)

VII Office of Educational Research and Improvement, Department of Education (Parts 700—799) [Reserved]

SUBTITLE C—REGULATIONS RELATING TO EDUCATION

XI National Institute for Literacy (Parts 1100—1199)

XII National Council on Disability (Parts 1200—1299)

Title 35 [Reserved]

Chap.

Title 36—Parks, Forests, and Public Property

I National Park Service, Department of the Interior (Parts 1—199)
II Forest Service, Department of Agriculture (Parts 200—299)
III Corps of Engineers, Department of the Army (Parts 300—399)
IV American Battle Monuments Commission (Parts 400—499)
V Smithsonian Institution (Parts 500—599)
VI [Reserved]
VII Library of Congress (Parts 700—799)
VIII Advisory Council on Historic Preservation (Parts 800—899)
IX Pennsylvania Avenue Development Corporation (Parts 900—999)
X Presidio Trust (Parts 1000—1099)
XI Architectural and Transportation Barriers Compliance Board (Parts 1100—1199)
XII National Archives and Records Administration (Parts 1200—1299)
XV Oklahoma City National Memorial Trust (Parts 1500—1599)
XVI Morris K. Udall Scholarship and Excellence in National Environmental Policy Foundation (Parts 1600—1699)

Title 37—Patents, Trademarks, and Copyrights

I United States Patent and Trademark Office, Department of Commerce (Parts 1—199)
II Copyright Office, Library of Congress (Parts 200—299)
III Copyright Royalty Board, Library of Congress (Parts 300—399)
IV Assistant Secretary for Technology Policy, Department of Commerce (Parts 400—599)

Title 38—Pensions, Bonuses, and Veterans' Relief

I Department of Veterans Affairs (Parts 0—199)
II Armed Forces Retirement Home (Parts 200—299)

Title 39—Postal Service

I United States Postal Service (Parts 1—999)
III Postal Regulatory Commission (Parts 3000—3099)

Title 40—Protection of Environment

I Environmental Protection Agency (Parts 1—1099)
IV Environmental Protection Agency and Department of Justice (Parts 1400—1499)
V Council on Environmental Quality (Parts 1500—1599)
VI Chemical Safety and Hazard Investigation Board (Parts 1600—1699)

Title 40—Protection of Environment—Continued

Chap.

VII Environmental Protection Agency and Department of Defense; Uniform National Discharge Standards for Vessels of the Armed Forces (Parts 1700—1799)

Title 41—Public Contracts and Property Management

SUBTITLE A—FEDERAL PROCUREMENT REGULATIONS SYSTEM [NOTE]

SUBTITLE B—OTHER PROVISIONS RELATING TO PUBLIC CONTRACTS

50 Public Contracts, Department of Labor (Parts 50–1—50–999)

51 Committee for Purchase From People Who Are Blind or Severely Disabled (Parts 51–1—51–99)

60 Office of Federal Contract Compliance Programs, Equal Employment Opportunity, Department of Labor (Parts 60–1—60–999)

61 Office of the Assistant Secretary for Veterans' Employment and Training Service, Department of Labor (Parts 61–1—61–999)

62—100 [Reserved]

SUBTITLE C—FEDERAL PROPERTY MANAGEMENT REGULATIONS SYSTEM

101 Federal Property Management Regulations (Parts 101–1—101–99)

102 Federal Management Regulation (Parts 102–1—102–299)

103—104 [Reserved]

105 General Services Administration (Parts 105–1—105–999)

109 Department of Energy Property Management Regulations (Parts 109–1—109–99)

114 Department of the Interior (Parts 114–1—114–99)

115 Environmental Protection Agency (Parts 115–1—115–99)

128 Department of Justice (Parts 128–1—128–99)

129—200 [Reserved]

SUBTITLE D—OTHER PROVISIONS RELATING TO PROPERTY MANAGEMENT [RESERVED]

SUBTITLE E—FEDERAL INFORMATION RESOURCES MANAGEMENT REGULATIONS SYSTEM [RESERVED]

SUBTITLE F—FEDERAL TRAVEL REGULATION SYSTEM

300 General (Parts 300–1—300–99)

301 Temporary Duty (TDY) Travel Allowances (Parts 301–1—301–99)

302 Relocation Allowances (Parts 302–1—302–99)

303 Payment of Expenses Connected with the Death of Certain Employees (Part 303–1—303–99)

304 Payment of Travel Expenses from a Non-Federal Source (Parts 304–1—304–99)

Title 42—Public Health

I Public Health Service, Department of Health and Human Services (Parts 1—199)

IV Centers for Medicare & Medicaid Services, Department of Health and Human Services (Parts 400—599)

Title 42—Public Health—Continued

Chap.

V Office of Inspector General-Health Care, Department of Health and Human Services (Parts 1000—1999)

Title 43—Public Lands: Interior

SUBTITLE A—OFFICE OF THE SECRETARY OF THE INTERIOR (PARTS 1—199)

SUBTITLE B—REGULATIONS RELATING TO PUBLIC LANDS

I Bureau of Reclamation, Department of the Interior (Parts 400—999)

II Bureau of Land Management, Department of the Interior (Parts 1000—9999)

III Utah Reclamation Mitigation and Conservation Commission (Parts 10000—10099)

Title 44—Emergency Management and Assistance

I Federal Emergency Management Agency, Department of Homeland Security (Parts 0—399)

IV Department of Commerce and Department of Transportation (Parts 400—499)

Title 45—Public Welfare

SUBTITLE A—DEPARTMENT OF HEALTH AND HUMAN SERVICES (PARTS 1—199)

SUBTITLE B—REGULATIONS RELATING TO PUBLIC WELFARE

II Office of Family Assistance (Assistance Programs), Administration for Children and Families, Department of Health and Human Services (Parts 200—299)

III Office of Child Support Enforcement (Child Support Enforcement Program), Administration for Children and Families, Department of Health and Human Services (Parts 300—399)

IV Office of Refugee Resettlement, Administration for Children and Families, Department of Health and Human Services (Parts 400—499)

V Foreign Claims Settlement Commission of the United States, Department of Justice (Parts 500—599)

VI National Science Foundation (Parts 600—699)

VII Commission on Civil Rights (Parts 700—799)

VIII Office of Personnel Management (Parts 800—899)

X Office of Community Services, Administration for Children and Families, Department of Health and Human Services (Parts 1000—1099)

XI National Foundation on the Arts and the Humanities (Parts 1100—1199)

XII Corporation for National and Community Service (Parts 1200—1299)

XIII Office of Human Development Services, Department of Health and Human Services (Parts 1300—1399)

Title 45—Public Welfare—Continued

Chap.	
XVI	Legal Services Corporation (Parts 1600—1699)
XVII	National Commission on Libraries and Information Science (Parts 1700—1799)
XVIII	Harry S. Truman Scholarship Foundation (Parts 1800—1899)
XXI	Commission on Fine Arts (Parts 2100—2199)
XXIII	Arctic Research Commission (Part 2301)
XXIV	James Madison Memorial Fellowship Foundation (Parts 2400—2499)
XXV	Corporation for National and Community Service (Parts 2500—2599)

Title 46—Shipping

I	Coast Guard, Department of Homeland Security (Parts 1—199)
II	Maritime Administration, Department of Transportation (Parts 200—399)
III	Coast Guard (Great Lakes Pilotage), Department of Homeland Security (Parts 400—499)
IV	Federal Maritime Commission (Parts 500—599)

Title 47—Telecommunication

I	Federal Communications Commission (Parts 0—199)
II	Office of Science and Technology Policy and National Security Council (Parts 200—299)
III	National Telecommunications and Information Administration, Department of Commerce (Parts 300—399)
IV	National Telecommunications and Information Administration, Department of Commerce, and National Highway Traffic Safety Administration, Department of Transportation (Parts 400—499)

Title 48—Federal Acquisition Regulations System

1	Federal Acquisition Regulation (Parts 1—99)
2	Defense Acquisition Regulations System, Department of Defense (Parts 200—299)
3	Health and Human Services (Parts 300—399)
4	Department of Agriculture (Parts 400—499)
5	General Services Administration (Parts 500—599)
6	Department of State (Parts 600—699)
7	Agency for International Development (Parts 700—799)
8	Department of Veterans Affairs (Parts 800—899)
9	Department of Energy (Parts 900—999)
10	Department of the Treasury (Parts 1000—1099)
12	Department of Transportation (Parts 1200—1299)
13	Department of Commerce (Parts 1300—1399)
14	Department of the Interior (Parts 1400—1499)

Title 48—Federal Acquisition Regulations System—Continued

Chap.

15 Environmental Protection Agency (Parts 1500—1599)

16 Office of Personnel Management, Federal Employees Health Benefits Acquisition Regulation (Parts 1600—1699)

17 Office of Personnel Management (Parts 1700—1799)

18 National Aeronautics and Space Administration (Parts 1800—1899)

19 Broadcasting Board of Governors (Parts 1900—1999)

20 Nuclear Regulatory Commission (Parts 2000—2099)

21 Office of Personnel Management, Federal Employees Group Life Insurance Federal Acquisition Regulation (Parts 2100—2199)

23 Social Security Administration (Parts 2300—2399)

24 Department of Housing and Urban Development (Parts 2400—2499)

25 National Science Foundation (Parts 2500—2599)

28 Department of Justice (Parts 2800—2899)

29 Department of Labor (Parts 2900—2999)

30 Department of Homeland Security, Homeland Security Acquisition Regulation (HSAR) (Parts 3000—3099)

34 Department of Education Acquisition Regulation (Parts 3400—3499)

51 Department of the Army Acquisition Regulations (Parts 5100—5199)

52 Department of the Navy Acquisition Regulations (Parts 5200—5299)

53 Department of the Air Force Federal Acquisition Regulation Supplement (Parts 5300—5399) [Reserved]

54 Defense Logistics Agency, Department of Defense (Parts 5400—5499)

57 African Development Foundation (Parts 5700—5799)

61 Civilian Board of Contract Appeals, General Services Administration (Parts 6100—6199)

63 Department of Transportation Board of Contract Appeals (Parts 6300—6399)

99 Cost Accounting Standards Board, Office of Federal Procurement Policy, Office of Management and Budget (Parts 9900—9999)

Title 49—Transportation

SUBTITLE A—OFFICE OF THE SECRETARY OF TRANSPORTATION (PARTS 1—99)

SUBTITLE B—OTHER REGULATIONS RELATING TO TRANSPORTATION

I Pipeline and Hazardous Materials Safety Administration, Department of Transportation (Parts 100—199)

II Federal Railroad Administration, Department of Transportation (Parts 200—299)

III Federal Motor Carrier Safety Administration, Department of Transportation (Parts 300—399)

IV Coast Guard, Department of Homeland Security (Parts 400—499)

Title 49—Transportation—Continued

Chap.

V National Highway Traffic Safety Administration, Department of Transportation (Parts 500—599)

VI Federal Transit Administration, Department of Transportation (Parts 600—699)

VII National Railroad Passenger Corporation (AMTRAK) (Parts 700—799)

VIII National Transportation Safety Board (Parts 800—999)

X Surface Transportation Board, Department of Transportation (Parts 1000—1399)

XI Research and Innovative Technology Administration, Department of Transportation (Parts 1400—1499) [Reserved]

XII Transportation Security Administration, Department of Homeland Security (Parts 1500—1699)

Title 50—Wildlife and Fisheries

I United States Fish and Wildlife Service, Department of the Interior (Parts 1—199)

II National Marine Fisheries Service, National Oceanic and Atmospheric Administration, Department of Commerce (Parts 200—299)

III International Fishing and Related Activities (Parts 300—399)

IV Joint Regulations (United States Fish and Wildlife Service, Department of the Interior and National Marine Fisheries Service, National Oceanic and Atmospheric Administration, Department of Commerce); Endangered Species Committee Regulations (Parts 400—499)

V Marine Mammal Commission (Parts 500—599)

VI Fishery Conservation and Management, National Oceanic and Atmospheric Administration, Department of Commerce (Parts 600—699)

Alphabetical List of Agencies Appearing in the CFR

(Revised as of July 1, 2014)

Agency	CFR Title, Subtitle or Chapter
Administrative Committee of the Federal Register	1, I
Administrative Conference of the United States	1, III
Advisory Council on Historic Preservation	36, VIII
Advocacy and Outreach, Office of	7, XXV
Afghanistan Reconstruction, Special Inspector General for	22, LXXXIII
African Development Foundation	22, XV
Federal Acquisition Regulation	48, 57
Agency for International Development	2, VII; 22, II
Federal Acquisition Regulation	48, 7
Agricultural Marketing Service	7, I, IX, X, XI
Agricultural Research Service	7, V
Agriculture Department	2, IV; 5, LXXIII
Advocacy and Outreach, Office of	7, XXV
Agricultural Marketing Service	7, I, IX, X, XI
Agricultural Research Service	7, V
Animal and Plant Health Inspection Service	7, III; 9, I
Chief Financial Officer, Office of	7, XXX
Commodity Credit Corporation	7, XIV
Economic Research Service	7, XXXVII
Energy Policy and New Uses, Office of	2, IX; 7, XXIX
Environmental Quality, Office of	7, XXXI
Farm Service Agency	7, VII, XVIII
Federal Acquisition Regulation	48, 4
Federal Crop Insurance Corporation	7, IV
Food and Nutrition Service	7, II
Food Safety and Inspection Service	9, III
Foreign Agricultural Service	7, XV
Forest Service	36, II
Grain Inspection, Packers and Stockyards Administration	7, VIII; 9, II
Information Resources Management, Office of	7, XXVII
Inspector General, Office of	7, XXVI
National Agricultural Library	7, XLI
National Agricultural Statistics Service	7, XXXVI
National Institute of Food and Agriculture	7, XXXIV
Natural Resources Conservation Service	7, VI
Operations, Office of	7, XXVIII
Procurement and Property Management, Office of	7, XXXII
Rural Business-Cooperative Service	7, XVIII, XLII, L
Rural Development Administration	7, XLII
Rural Housing Service	7, XVIII, XXXV, L
Rural Telephone Bank	7, XVI
Rural Utilities Service	7, XVII, XVIII, XLII, L
Secretary of Agriculture, Office of	7, Subtitle A
Transportation, Office of	7, XXXIII
World Agricultural Outlook Board	7, XXXVIII
Air Force Department	32, VII
Federal Acquisition Regulation Supplement	48, 53
Air Transportation Stabilization Board	14, VI
Alcohol and Tobacco Tax and Trade Bureau	27, I
Alcohol, Tobacco, Firearms, and Explosives, Bureau of	27, II
AMTRAK	49, VII
American Battle Monuments Commission	36, IV
American Indians, Office of the Special Trustee	25, VII

Agency	CFR Title, Subtitle or Chapter
Animal and Plant Health Inspection Service	7, III; 9, I
Appalachian Regional Commission	5, IX
Architectural and Transportation Barriers Compliance Board	36, XI
Arctic Research Commission	45, XXIII
Armed Forces Retirement Home	5, XI
Army Department	32, V
Engineers, Corps of	33, II; 36, III
Federal Acquisition Regulation	48, 51
Bilingual Education and Minority Languages Affairs, Office of	34, V
Blind or Severely Disabled, Committee for Purchase from People Who Are	41, 51
Broadcasting Board of Governors	22, V
Federal Acquisition Regulation	48, 19
Bureau of Ocean Energy Management, Regulation, and Enforcement	30, II
Census Bureau	15, I
Centers for Medicare & Medicaid Services	42, IV
Central Intelligence Agency	32, XIX
Chemical Safety and Hazardous Investigation Board	40, VI
Chief Financial Officer, Office of	7, XXX
Child Support Enforcement, Office of	45, III
Children and Families, Administration for	45, II, III, IV, X
Civil Rights, Commission on	5, LXVIII; 45, VII
Civil Rights, Office for	34, I
Council of the Inspectors General on Integrity and Efficiency	5, XCVIII
Court Services and Offender Supervision Agency for the District of Columbia	5, LXX
Coast Guard	33, I; 46, I; 49, IV
Coast Guard (Great Lakes Pilotage)	46, III
Commerce Department	2, XIII; 44, IV; 50, VI
Census Bureau	15, I
Economic Analysis, Bureau of	15, VIII
Economic Development Administration	13, III
Emergency Management and Assistance	44, IV
Federal Acquisition Regulation	48, 13
Foreign-Trade Zones Board	15, IV
Industry and Security, Bureau of	15, VII
International Trade Administration	15, III; 19, III
National Institute of Standards and Technology	15, II
National Marine Fisheries Service	50, II, IV
National Oceanic and Atmospheric Administration	15, IX; 50, II, III, IV, VI
National Telecommunications and Information Administration	15, XXIII; 47, III, IV
National Weather Service	15, IX
Patent and Trademark Office, United States	37, I
Productivity, Technology and Innovation, Assistant Secretary for	37, IV
Secretary of Commerce, Office of	15, Subtitle A
Technology Administration	15, XI
Technology Policy, Assistant Secretary for	37, IV
Commercial Space Transportation	14, III
Commodity Credit Corporation	7, XIV
Commodity Futures Trading Commission	5, XLI; 17, I
Community Planning and Development, Office of Assistant Secretary for	24, V, VI
Community Services, Office of	45, X
Comptroller of the Currency	12, I
Construction Industry Collective Bargaining Commission	29, IX
Consumer Financial Protection Bureau	5, LXXXIV; 12, X
Consumer Product Safety Commission	5, LXXI; 16, II
Copyright Office	37, II
Copyright Royalty Board	37, III
Corporation for National and Community Service	2, XXII; 45, XII, XXV
Cost Accounting Standards Board	48, 99
Council on Environmental Quality	40, V
Court Services and Offender Supervision Agency for the District of Columbia	5, LXX; 28, VIII

Agency	CFR Title, Subtitle or Chapter
Customs and Border Protection	19, I
Defense Contract Audit Agency	32, I
Defense Department	2, XI; 5, XXVI; 32, Subtitle A; 40, VII
Advanced Research Projects Agency	32, I
Air Force Department	32, VII
Army Department	32, V; 33, II; 36, III, 48, 51
Defense Acquisition Regulations System	48, 2
Defense Intelligence Agency	32, I
Defense Logistics Agency	32, I, XII; 48, 54
Engineers, Corps of	33, II; 36, III
National Imagery and Mapping Agency	32, I
Navy Department	32, VI; 48, 52
Secretary of Defense, Office of	2, XI; 32, I
Defense Contract Audit Agency	32, I
Defense Intelligence Agency	32, I
Defense Logistics Agency	32, XII; 48, 54
Defense Nuclear Facilities Safety Board	10, XVII
Delaware River Basin Commission	18, III
District of Columbia, Court Services and Offender Supervision Agency for the	5, LXX; 28, VIII
Drug Enforcement Administration	21, II
East-West Foreign Trade Board	15, XIII
Economic Analysis, Bureau of	15, VIII
Economic Development Administration	13, III
Economic Research Service	7, XXXVII
Education, Department of	2, XXXIV; 5, LIII
Bilingual Education and Minority Languages Affairs, Office of	34, V
Civil Rights, Office for	34, I
Educational Research and Improvement, Office of	34, VII
Elementary and Secondary Education, Office of	34, II
Federal Acquisition Regulation	48, 34
Postsecondary Education, Office of	34, VI
Secretary of Education, Office of	34, Subtitle A
Special Education and Rehabilitative Services, Office of	34, III
Vocational and Adult Education, Office of	34, IV
Educational Research and Improvement, Office of	34, VII
Election Assistance Commission	2, LVIII; 11, II
Elementary and Secondary Education, Office of	34, II
Emergency Oil and Gas Guaranteed Loan Board	13, V
Emergency Steel Guarantee Loan Board	13, IV
Employee Benefits Security Administration	29, XXV
Employees' Compensation Appeals Board	20, IV
Employees Loyalty Board	5, V
Employment and Training Administration	20, V
Employment Standards Administration	20, VI
Endangered Species Committee	50, IV
Energy, Department of	2, IX; 5, XXIII; 10, II, III, X
Federal Acquisition Regulation	48, 9
Federal Energy Regulatory Commission	5, XXIV; 18, I
Property Management Regulations	41, 109
Energy, Office of	7, XXIX
Engineers, Corps of	33, II; 36, III
Engraving and Printing, Bureau of	31, VI
Environmental Protection Agency	2, XV; 5, LIV; 40, I, IV, VII
Federal Acquisition Regulation	48, 15
Property Management Regulations	41, 115
Environmental Quality, Office of	7, XXXI
Equal Employment Opportunity Commission	5, LXII; 29, XIV
Equal Opportunity, Office of Assistant Secretary for	24, I
Executive Office of the President	3, I
Administration, Office of	5, XV
Environmental Quality, Council on	40, V

Agency	CFR Title, Subtitle or Chapter
Management and Budget, Office of	2, Subtitle A; 5, III, LXXVII; 14, VI; 48, 99
National Drug Control Policy, Office of	21, III
National Security Council	32, XXI; 47, 2
Presidential Documents	3
Science and Technology Policy, Office of	32, XXIV; 47, II
Trade Representative, Office of the United States	15, XX
Export-Import Bank of the United States	2, XXXV; 5, LII; 12, IV
Family Assistance, Office of	45, II
Farm Credit Administration	5, XXXI; 12, VI
Farm Credit System Insurance Corporation	5, XXX; 12, XIV
Farm Service Agency	7, VII, XVIII
Federal Acquisition Regulation	48, 1
Federal Aviation Administration	14, I
Commercial Space Transportation	14, III
Federal Claims Collection Standards	31, IX
Federal Communications Commission	5, XXIX; 47, I
Federal Contract Compliance Programs, Office of	41, 60
Federal Crop Insurance Corporation	7, IV
Federal Deposit Insurance Corporation	5, XXII; 12, III
Federal Election Commission	5, XXXVII; 11, I
Federal Emergency Management Agency	44, I
Federal Employees Group Life Insurance Federal Acquisition Regulation	48, 21
Federal Employees Health Benefits Acquisition Regulation	48, 16
Federal Energy Regulatory Commission	5, XXIV; 18, I
Federal Financial Institutions Examination Council	12, XI
Federal Financing Bank	12, VIII
Federal Highway Administration	23, I, II
Federal Home Loan Mortgage Corporation	1, IV
Federal Housing Enterprise Oversight Office	12, XVII
Federal Housing Finance Agency	5, LXXX; 12, XII
Federal Housing Finance Board	12, IX
Federal Labor Relations Authority	5, XIV, XLIX; 22, XIV
Federal Law Enforcement Training Center	31, VII
Federal Management Regulation	41, 102
Federal Maritime Commission	46, IV
Federal Mediation and Conciliation Service	29, XII
Federal Mine Safety and Health Review Commission	5, LXXIV; 29, XXVII
Federal Motor Carrier Safety Administration	49, III
Federal Prison Industries, Inc.	28, III
Federal Procurement Policy Office	48, 99
Federal Property Management Regulations	41, 101
Federal Railroad Administration	49, II
Federal Register, Administrative Committee of	1, I
Federal Register, Office of	1, II
Federal Reserve System	12, II
Board of Governors	5, LVIII
Federal Retirement Thrift Investment Board	5, VI, LXXVI
Federal Service Impasses Panel	5, XIV
Federal Trade Commission	5, XLVII; 16, I
Federal Transit Administration	49, VI
Federal Travel Regulation System	41, Subtitle F
Financial Crimes Enforcement Network	31, X
Financial Research Office	12, XVI
Financial Stability Oversight Council	12, XIII
Fine Arts, Commission on	45, XXI
Fiscal Service	31, II
Fish and Wildlife Service, United States	50, I, IV
Food and Drug Administration	21, I
Food and Nutrition Service	7, II
Food Safety and Inspection Service	9, III
Foreign Agricultural Service	7, XV
Foreign Assets Control, Office of	31, V
Foreign Claims Settlement Commission of the United States	45, V
Foreign Service Grievance Board	22, IX
Foreign Service Impasse Disputes Panel	22, XIV

Agency	CFR Title, Subtitle or Chapter
Foreign Service Labor Relations Board	22, XIV
Foreign-Trade Zones Board	15, IV
Forest Service	36, II
General Services Administration	5, LVII; 41, 105
Contract Appeals, Board of	48, 61
Federal Acquisition Regulation	48, 5
Federal Management Regulation	41, 102
Federal Property Management Regulations	41, 101
Federal Travel Regulation System	41, Subtitle F
General	41, 300
Payment From a Non-Federal Source for Travel Expenses	41, 304
Payment of Expenses Connected With the Death of Certain Employees	41, 303
Relocation Allowances	41, 302
Temporary Duty (TDY) Travel Allowances	41, 301
Geological Survey	30, IV
Government Accountability Office	4, I
Government Ethics, Office of	5, XVI
Government National Mortgage Association	24, III
Grain Inspection, Packers and Stockyards Administration	7, VIII; 9, II
Harry S. Truman Scholarship Foundation	45, XVIII
Health and Human Services, Department of	2, III; 5, XLV; 45, Subtitle A,
Centers for Medicare & Medicaid Services	42, IV
Child Support Enforcement, Office of	45, III
Children and Families, Administration for	45, II, III, IV, X
Community Services, Office of	45, X
Family Assistance, Office of	45, II
Federal Acquisition Regulation	48, 3
Food and Drug Administration	21, I
Human Development Services, Office of	45, XIII
Indian Health Service	25, V
Inspector General (Health Care), Office of	42, V
Public Health Service	42, I
Refugee Resettlement, Office of	45, IV
Homeland Security, Department of	2, XXX; 6, I; 8, I
Coast Guard	33, I; 46, I; 49, IV
Coast Guard (Great Lakes Pilotage)	46, III
Customs and Border Protection	19, I
Federal Emergency Management Agency	44, I
Human Resources Management and Labor Relations Systems	5, XCVII
Immigration and Customs Enforcement Bureau	19, IV
Transportation Security Administration	49, XII
HOPE for Homeowners Program, Board of Directors of	24, XXIV
Housing and Urban Development, Department of	2, XXIV; 5, LXV; 24, Subtitle B
Community Planning and Development, Office of Assistant Secretary for	24, V, VI
Equal Opportunity, Office of Assistant Secretary for	24, I
Federal Acquisition Regulation	48, 24
Federal Housing Enterprise Oversight, Office of	12, XVII
Government National Mortgage Association	24, III
Housing—Federal Housing Commissioner, Office of Assistant Secretary for	24, II, VIII, X, XX
Housing, Office of, and Multifamily Housing Assistance Restructuring, Office of	24, IV
Inspector General, Office of	24, XII
Public and Indian Housing, Office of Assistant Secretary for	24, IX
Secretary, Office of	24, Subtitle A, VII
Housing—Federal Housing Commissioner, Office of Assistant Secretary for	24, II, VIII, X, XX
Housing, Office of, and Multifamily Housing Assistance Restructuring, Office of	24, IV
Human Development Services, Office of	45, XIII
Immigration and Customs Enforcement Bureau	19, IV
Immigration Review, Executive Office for	8, V

Agency	CFR Title, Subtitle or Chapter
Independent Counsel, Office of	28, VII
Indian Affairs, Bureau of	25, I, V
Indian Affairs, Office of the Assistant Secretary	25, VI
Indian Arts and Crafts Board	25, II
Indian Health Service	25, V
Industry and Security, Bureau of	15, VII
Information Resources Management, Office of	7, XXVII
Information Security Oversight Office, National Archives and Records Administration	32, XX
Inspector General	
Agriculture Department	7, XXVI
Health and Human Services Department	42, V
Housing and Urban Development Department	24, XII, XV
Institute of Peace, United States	22, XVII
Inter-American Foundation	5, LXIII; 22, X
Interior Department	2, XIV
American Indians, Office of the Special Trustee	25, VII
Bureau of Ocean Energy Management, Regulation, and Enforcement	30, II
Endangered Species Committee	50, IV
Federal Acquisition Regulation	48, 14
Federal Property Management Regulations System	41, 114
Fish and Wildlife Service, United States	50, I, IV
Geological Survey	30, IV
Indian Affairs, Bureau of	25, I, V
Indian Affairs, Office of the Assistant Secretary	25, VI
Indian Arts and Crafts Board	25, II
Land Management, Bureau of	43, II
National Indian Gaming Commission	25, III
National Park Service	36, I
Natural Resource Revenue, Office of	30, XII
Ocean Energy Management, Bureau of	30, V
Reclamation, Bureau of	43, I
Secretary of the Interior, Office of	2, XIV; 43, Subtitle A
Surface Mining Reclamation and Enforcement, Office of	30, VII
Internal Revenue Service	26, I
International Boundary and Water Commission, United States and Mexico, United States Section	22, XI
International Development, United States Agency for	22, II
Federal Acquisition Regulation	48, 7
International Development Cooperation Agency, United States	22, XII
International Joint Commission, United States and Canada	22, IV
International Organizations Employees Loyalty Board	5, V
International Trade Administration	15, III; 19, III
International Trade Commission, United States	19, II
Interstate Commerce Commission	5, XL
Investment Security, Office of	31, VIII
Iraq Reconstruction, Special Inspector General for	5, LXXXVII
James Madison Memorial Fellowship Foundation	45, XXIV
Japan–United States Friendship Commission	22, XVI
Joint Board for the Enrollment of Actuaries	20, VIII
Justice Department	2, XXVIII; 5, XXVIII; 28, I, XI; 40, IV
Alcohol, Tobacco, Firearms, and Explosives, Bureau of	27, II
Drug Enforcement Administration	21, II
Federal Acquisition Regulation	48, 28
Federal Claims Collection Standards	31, IX
Federal Prison Industries, Inc.	28, III
Foreign Claims Settlement Commission of the United States	45, V
Immigration Review, Executive Office for	8, V
Offices of Independent Counsel	28, VI
Prisons, Bureau of	28, V
Property Management Regulations	41, 128
Labor Department	5, XLII
Employee Benefits Security Administration	29, XXV

Agency	CFR Title, Subtitle or Chapter
Employees' Compensation Appeals Board	20, IV
Employment and Training Administration	20, V
Employment Standards Administration	20, VI
Federal Acquisition Regulation	48, 29
Federal Contract Compliance Programs, Office of	41, 60
Federal Procurement Regulations System	41, 50
Labor-Management Standards, Office of	29, II, IV
Mine Safety and Health Administration	30, I
Occupational Safety and Health Administration	29, XVII
Office of Workers' Compensation Programs	20, VII
Public Contracts	41, 50
Secretary of Labor, Office of	29, Subtitle A
Veterans' Employment and Training Service, Office of the Assistant Secretary for	41, 61; 20, IX
Wage and Hour Division	29, V
Workers' Compensation Programs, Office of	20, I
Labor-Management Standards, Office of	29, II, IV
Land Management, Bureau of	43, II
Legal Services Corporation	45, XVI
Library of Congress	36, VII
Copyright Office	37, II
Copyright Royalty Board	37, III
Local Television Loan Guarantee Board	7, XX
Management and Budget, Office of	5, III, LXXVII; 14, VI; 48, 99
Marine Mammal Commission	50, V
Maritime Administration	46, II
Merit Systems Protection Board	5, II, LXIV
Micronesian Status Negotiations, Office for	32, XXVII
Millennium Challenge Corporation	22, XIII
Mine Safety and Health Administration	30, I
Minority Business Development Agency	15, XIV
Miscellaneous Agencies	1, IV
Monetary Offices	31, I
Morris K. Udall Scholarship and Excellence in National Environmental Policy Foundation	36, XVI
Museum and Library Services, Institute of	2, XXXI
National Aeronautics and Space Administration	2, XVIII; 5, LIX; 14, V
Federal Acquisition Regulation	48, 18
National Agricultural Library	7, XLI
National Agricultural Statistics Service	7, XXXVI
National and Community Service, Corporation for	2, XXII; 45, XII, XXV
National Archives and Records Administration	2, XXVI; 5, LXVI; 36, XII
Information Security Oversight Office	32, XX
National Capital Planning Commission	1, IV
National Commission for Employment Policy	1, IV
National Commission on Libraries and Information Science	45, XVII
National Council on Disability	34, XII
National Counterintelligence Center	32, XVIII
National Credit Union Administration	5, LXXXVI; 12, VII
National Crime Prevention and Privacy Compact Council	28, IX
National Drug Control Policy, Office of	21, III
National Endowment for the Arts	2, XXXII
National Endowment for the Humanities	2, XXXIII
National Foundation on the Arts and the Humanities	45, XI
National Highway Traffic Safety Administration	23, II, III; 47, VI; 49, V
National Imagery and Mapping Agency	32, I
National Indian Gaming Commission	25, III
National Institute for Literacy	34, XI
National Institute of Food and Agriculture	7, XXXIV
National Institute of Standards and Technology	15, II
National Intelligence, Office of Director of	32, XVII
National Labor Relations Board	5, LXI; 29, I
National Marine Fisheries Service	50, II, IV
National Mediation Board	29, X
National Oceanic and Atmospheric Administration	15, IX; 50, II, III, IV, VI

Agency	CFR Title, Subtitle or Chapter
National Park Service	36, I
National Railroad Adjustment Board	29, III
National Railroad Passenger Corporation (AMTRAK)	49, VII
National Science Foundation	2, XXV; 5, XLIII; 45, VI
Federal Acquisition Regulation	48, 25
National Security Council	32, XXI
National Security Council and Office of Science and Technology Policy	47, II
National Telecommunications and Information Administration	15, XXIII; 47, III, IV
National Transportation Safety Board	49, VIII
Natural Resources Conservation Service	7, VI
Natural Resource Revenue, Office of	30, XII
Navajo and Hopi Indian Relocation, Office of	25, IV
Navy Department	32, VI
Federal Acquisition Regulation	48, 52
Neighborhood Reinvestment Corporation	24, XXV
Northeast Interstate Low-Level Radioactive Waste Commission	10, XVIII
Nuclear Regulatory Commission	2, XX; 5, XLVIII; 10, I
Federal Acquisition Regulation	48, 20
Occupational Safety and Health Administration	29, XVII
Occupational Safety and Health Review Commission	29, XX
Ocean Energy Management, Bureau of	30, V
Offices of Independent Counsel	28, VI
Office of Workers' Compensation Programs	20, VII
Oklahoma City National Memorial Trust	36, XV
Operations Office	7, XXVIII
Overseas Private Investment Corporation	5, XXXIII; 22, VII
Patent and Trademark Office, United States	37, I
Payment From a Non-Federal Source for Travel Expenses	41, 304
Payment of Expenses Connected With the Death of Certain Employees	41, 303
Peace Corps	2, XXXVII; 22, III
Pennsylvania Avenue Development Corporation	36, IX
Pension Benefit Guaranty Corporation	29, XL
Personnel Management, Office of	5, I, XXXV; 45, VIII
Human Resources Management and Labor Relations Systems, Department of Homeland Security	5, XCVII
Federal Acquisition Regulation	48, 17
Federal Employees Group Life Insurance Federal Acquisition Regulation	48, 21
Federal Employees Health Benefits Acquisition Regulation	48, 16
Pipeline and Hazardous Materials Safety Administration	49, I
Postal Regulatory Commission	5, XLVI; 39, III
Postal Service, United States	5, LX; 39, I
Postsecondary Education, Office of	34, VI
President's Commission on White House Fellowships	1, IV
Presidential Documents	3
Presidio Trust	36, X
Prisons, Bureau of	28, V
Private and Civil Liberties Oversight Board	6, X
Procurement and Property Management, Office of	7, XXXII
Productivity, Technology and Innovation, Assistant Secretary	37, IV
Public Contracts, Department of Labor	41, 50
Public and Indian Housing, Office of Assistant Secretary for	24, IX
Public Health Service	42, I
Railroad Retirement Board	20, II
Reclamation, Bureau of	43, I
Recovery Accountability and Transparency Board	4, II
Refugee Resettlement, Office of	45, IV
Relocation Allowances	41, 302
Research and Innovative Technology Administration	49, XI
Rural Business-Cooperative Service	7, XVIII, XLII, L
Rural Development Administration	7, XLII
Rural Housing Service	7, XVIII, XXXV, L

Agency	CFR Title, Subtitle or Chapter
Rural Telephone Bank	7, XVI
Rural Utilities Service	7, XVII, XVIII, XLII, L
Saint Lawrence Seaway Development Corporation	33, IV
Science and Technology Policy, Office of	32, XXIV
Science and Technology Policy, Office of, and National Security Council	47, II
Secret Service	31, IV
Securities and Exchange Commission	5, XXXIV; 17, II
Selective Service System	32, XVI
Small Business Administration	2, XXVII; 13, I
Smithsonian Institution	36, V
Social Security Administration	2, XXIII; 20, III; 48, 23
Soldiers' and Airmen's Home, United States	5, XI
Special Counsel, Office of	5, VIII
Special Education and Rehabilitative Services, Office of	34, III
State Department	2, VI; 22, I; 28, XI
Federal Acquisition Regulation	48, 6
Surface Mining Reclamation and Enforcement, Office of	30, VII
Surface Transportation Board	49, X
Susquehanna River Basin Commission	18, VIII
Technology Administration	15, XI
Technology Policy, Assistant Secretary for	37, IV
Tennessee Valley Authority	5, LXIX; 18, XIII
Thrift Supervision Office, Department of the Treasury	12, V
Trade Representative, United States, Office of	15, XX
Transportation, Department of	2, XII; 5, L
Commercial Space Transportation	14, III
Contract Appeals, Board of	48, 63
Emergency Management and Assistance	44, IV
Federal Acquisition Regulation	48, 12
Federal Aviation Administration	14, I
Federal Highway Administration	23, I, II
Federal Motor Carrier Safety Administration	49, III
Federal Railroad Administration	49, II
Federal Transit Administration	49, VI
Maritime Administration	46, II
National Highway Traffic Safety Administration	23, II, III; 47, IV; 49, V
Pipeline and Hazardous Materials Safety Administration	49, I
Saint Lawrence Seaway Development Corporation	33, IV
Secretary of Transportation, Office of	14, II; 49, Subtitle A
Surface Transportation Board	49, X
Transportation Statistics Bureau	49, XI
Transportation, Office of	7, XXXIII
Transportation Security Administration	49, XII
Transportation Statistics Bureau	49, XI
Travel Allowances, Temporary Duty (TDY)	41, 301
Treasury Department	5, XXI; 12, XV; 17, IV; 31, IX
Alcohol and Tobacco Tax and Trade Bureau	27, I
Community Development Financial Institutions Fund	12, XVIII
Comptroller of the Currency	12, I
Customs and Border Protection	19, I
Engraving and Printing, Bureau of	31, VI
Federal Acquisition Regulation	48, 10
Federal Claims Collection Standards	31, IX
Federal Law Enforcement Training Center	31, VII
Financial Crimes Enforcement Network	31, X
Fiscal Service	31, II
Foreign Assets Control, Office of	31, V
Internal Revenue Service	26, I
Investment Security, Office of	31, VIII
Monetary Offices	31, I
Secret Service	31, IV
Secretary of the Treasury, Office of	31, Subtitle A
Thrift Supervision, Office of	12, V
Truman, Harry S. Scholarship Foundation	45, XVIII
United States and Canada, International Joint Commission	22, IV

Agency	CFR Title, Subtitle or Chapter
United States and Mexico, International Boundary and Water Commission, United States Section	22, XI
U.S. Copyright Office	37, II
Utah Reclamation Mitigation and Conservation Commission	43, III
Veterans Affairs Department	2, VIII; 38, I
Federal Acquisition Regulation	48, 8
Veterans' Employment and Training Service, Office of the Assistant Secretary for	41, 61; 20, IX
Vice President of the United States, Office of	32, XXVIII
Vocational and Adult Education, Office of	34, IV
Wage and Hour Division	29, V
Water Resources Council	18, VI
Workers' Compensation Programs, Office of	20, I
World Agricultural Outlook Board	7, XXXVIII

List of CFR Sections Affected

All changes in this volume of the Code of Federal Regulations (CFR) that were made by documents published in the FEDERAL REGISTER since January 1, 2009 are enumerated in the following list. Entries indicate the nature of the changes effected. Page numbers refer to FEDERAL REGISTER pages. The user should consult the entries for chapters, parts and subparts as well as sections for revisions.

For changes to this volume of the CFR prior to this listing, consult the annual edition of the monthly List of CFR Sections Affected (LSA). The LSA is available at *www.fdsys.gov*. For changes to this volume of the CFR prior to 2001, see the ''List of CFR Sections Affected, 1949–1963, 1964–1972, 1973–1985, and 1986–2000'' published in 11 separate volumes. The ''List of CFR Sections Affected 1986–2000'' is available at *www.fdsys.gov*.

2009

29 CFR

74 FR Page

Chapter XVII

1956.80—1956.84 (Subpart I) Added 45114

Chapter XX

2200.1 (b), (i) and (j) correctly amended 63986
2200.8 (d) correctly revised; (e)(2) and (g)(1) correctly amended 63986
2200.20 (a) and (b) correctly amended 63986
2200.21 (a) correctly amended 63986
2200.37 (c)(3) and (d)(4) correctly amended 63986
2200.40 (b) and (c) correctly amended 63986
2200.51 (b) correctly amended 63986
2200.52 (a)(1)(iii), (2) and (d) correctly amended 63987
2200.56 (a), (c), (e), (f), (g)(1), (h), (1) and (3) correctly amended 63987
2200.60 Correctly amended 63987
2200.61 Correctly amended 63987
2200.62 (c) correctly amended 63987
2200.64 (b) correctly amended 63987
2200.67 Heading correctly amended 63987
2200.68 Heading correctly amended 63987
2200.70 (f) correctly amended 63987

29 CFR—Continued

74 FR Page

Chapter XX—Continued

2200.73 (b) correctly amended; (g) correctly added 63987
2200.74 (b) correctly amended 63987
2200.91 (h) correctly removed 63987
2200.93 (e) and (i) correctly amended; (h) removed; (i) correctly redesignated as (h) 63987
2200.95 (c)(1) and (h)(1) correctly amended 63987
2200.104 (b)(2) and (d) correctly amended 63987
2200.120 (e) correctly amended 63987
2200.202 (a)(5) correctly amended 63987
2200.203 (b) and (c) correctly amended 63987
2200.204 (a) and (b) correctly amended 63987
2200.209 (f) and (g) correctly amended 63988
2203.2 Correctly amended 63988
2203.3 (b)(4) correctly amended 63988
2204.102 (d) correctly amended 63988
2204.105 (c) correctly amended 63988
2204.108 Correctly amended 63988

Chapter XXV

2550 Authority citation revised 3846, 11848, 23952, 59093
Regulation at 74 FR 3846 eff. date delayed to 5–22–09 11847
Regulation at 74 FR 3846 eff. date delayed to 11–18–09 23951

29 CFR—Continued

74 FR Page

Chapter XXV—Continued
2550 Regulation at 74 FR 3846 eff. date delayed to 5–17–10 59092
Regulation at 74 FR 3846 withdrawn 60156
2550.408g–1 Added 3846
Regulation at 74 FR 3846 eff. date delayed to 5–22–09 11847
(g) amended 11848
Regulation at 74 FR 3846 eff. date delayed to 11–18–09.....23951
(g) amended 23952
2550.408g–1 Regulation at 74 FR 3846 eff. date delayed to 5–17–10 59092
(g) amended 59093
Regulation at 74 FR 3846 withdrawn 60156
2550.408g–2 Added 3853
Regulation at 74 FR 3853 eff. date delayed to 5–22–09 11847
Regulation at 74 FR 3853 eff. date delayed to 11–18–09.....23951
2550.408g–2 Regulation at 74 FR 3853 eff. date delayed to 5–17–10 59092
Regulation at 74 FR 3853 withdrawn 60156
2560 Technical correction.....2373
2560.502c–4 Added 20
2590 Authority citation amended 51683
2590.701–1 (b)(6) revised; (b)(7) added; interim 51683
2590.701–2 Amended; interim 51683
2590.702 (a)(1)(vi), (c)(2)(i) and (iii) revised; interim 51683
2590.702–1 Added; interim 51683
2590.732 (b) revised; interim.....51687

Chapter XL
4001.2 Amended.....11029, 59095
4001.2 Amended; eff. 7–8–09 27081
4010.1 Amended.....11029
4010.2 Amended.....11029
4010.3 (a) revised 11029
4010.4 Revised 11030
4010.5 (c)(1) heading and (2) removed; (c)(1) redesignated as (c); (b) and new (c) amended; (d) and (e) added 11031
4010.6 (a)(1), (2), (b) and (c) amended 11031
4010.7 (a) introductory text, (1)(ii), (2), (b) introductory text, (1)(iii), (iv), (v) and (2) amended; (b)(1)(vi) added 11031
4010.8 Revised 11031

29 CFR—Continued

74 FR Page

Chapter XL—Continued
4010.9 (a), (c) and (d) amended 11034
4010.10 (a) through (e) amended 11034
4010.11 Revised 11034
4010.12 Redesignated as 4010.13; new 4010.12 added 11035
4010.13 Redesignated as 4010.14; new 4010.13 redesignated from 4010.12 and amended 11035
4010.14 Redesignated as 4010.15; new 4010.14 redesignated from 4010.13 and amended 11035
4010.15 Redesignated from 4010.14.....11035
4022.2 Amended.....59096
4022.11 Added 59096
4022 Appendix B amended.....2864, 7181, 11036, 17395, 22827, 28162, 34238, 41039, 47098, 52886, 58544, 66235
Appendix B corrected 18290
Appendix C amended 2864, 7181, 11036, 17396, 22827, 28163, 34238, 41040, 47098, 52886, 58545, 66235
Appendix C corrected 18290
Appendix D removed 62697
4044.2 Amended.....11035
4044 Appendix B corrected.....773
Appendix B amended 11037, 28163, 47099, 66236
Appendix D amended 62698
4901.2 Amended; eff. 7–8–09 27081
4901.11 Amended; eff. 7–8–09 27081
4902.1 Revised; eff. 7–8–09 27081
4902.2 Amended; eff. 7–8–09 27081
4902.3 (a) amended; eff. 7–8–09 27081
4902.4 (a) amended; eff. 7–8–09 27082
4902.6 (a) amended; eff. 7–8–09 27082
4902.7 (a) and (b) amended; eff. 7–8–09.....27082
(a) and (b) correctly amended; eff. 7–8–09 30212
4902.9 Redesignated as 4902.10; new 4902.9 added; eff. 7–8–09 27082
4902.10 Redesignated as 4902.12; new 4902.10 redesignated from 4902.9 and revised; eff. 7–8–09 27082
4902.11 Added; eff. 7–8–09 27082
4902.12 Redesignated from 4902.10; eff. 7–8–09 27082

2010

29 CFR

75 FR Page

Chapter XVII
1978 Revised; interim 53553
Clarification.....71356

29 CFR—Continued

75 FR Page

Chapter XVII—Continued

1982 Added; interim 53527
Clarification 71356
1983 Added; interim 53538
Clarification 71355

Chapter XX

2200.209 (g) correctly amended 18404
2201 Authority citation revised 41371
2201.3 (a), (c) and (d) revised 41371
2201.4 (c) introductory text, (1), (3), (4), (5) and (d) revised; (e) amended 41371
2201.6 (a), (c), (d)(3) and (g) revised; (h) and (i) added 41372
2201.7 (b)(1), (2) introductory text and (e) revised; (b)(2)(v) added 41372
2201.10 (a)(3), (5) and (7) revised; (a)(8), (10) and (11) redesignated as (a)(16, (17) and (18); (a)(9) removed; new (a)(8) through (15) added 41373
2510.3–102 (a), (b), (c) and (f) revised 2076
2520 Authority citation revised 9341
2520.101–6 Added 9341
2520.104b–30 (a) revised 9342
2530 Authority citation revised 32850
2530.206 Revised; eff. 8–9–10 32850
2550.404a–5 Added 64937
2550.404c–1 (b)(2)(i)(B), (c)(1)(ii) and (f)(1) revised; (d)(2)(iv) added 64946
2550.408b–2 (c) revised; interim; eff. 7–16–11 41635
2560 Authority citation revised 8800
2560.502c–8 Added 8800
2570 Authority citation revised 8801
2570.160—2570.171 (Subpart I) Added 8801
2578 Appendix B corrected; second Appendix C correctly removed; CFR correction 34626
2590 Authority citation revised 5438, 27136
2590.701–2 Amended; interim; eff. 8–27–10 37229
2590.701–3 (a)(1)(i) revised; interim; eff. 8–27–10 37229
2590.712 Revised; interim 5438
2590.715–1251 Added 34562

29 CFR—Continued

75 FR Page

Chapter XX—Continued

(a)(5) and (f)(2) removed; (a)(3), (i), (ii) and (f)(1) redesignated as (a)(3)(i), (A), (B) and (f); (a)(1) and (g)(4) *Example 9* revised; new (a)(3)(ii) added; new (f) amended; interim 70121
2590.715–2704 Added; interim; eff. 8–27–10 37229
2590.715–2711 Added; interim; eff. 8–27–10 37229
2590.715–2712 Added; interim; eff. 8–27–10 37231
2590.715–2713 Added; interim 41757
2590.715–2714 Added; interim; eff. 7–12–10 27136
(h) revised; eff. 7–12–10 34566
2590.715–2719 Added; interim 43354
2590.715–2719A Added; interim; eff. 8–27–10 37232

Chapter XXVII

2700.5 (b) revised; interim 21989
(b) revised 73957
(c) revised 81462
2700.31 Revised 21989, 73957
2700.100—2700.110 (Subpart J) Added 81462

Chapter XL

4003.32 Amended 68205
4003.52 Amended 68205
4022 Appendix B amended 2438, 6857, 12122, 19543, 27190, 33689, 41091, 49408, 55967, 63381, 69589, 78161
Appendix C amended 2438, 6858, 12122, 19543, 27190, 33689, 41092, 49408, 55968, 63381, 69589, 78162
4044 Appendix B amended 12123, 33689, 55968, 78162
Appendix D amended 74622
4903 Revised 68205

2011

29 CFR

76 FR Page

Chapter XVII

1928 Authority citation revised; eff. 7–8–11 33612
1928.110 (b) amended; eff. 7–8–11 33612
1952.265 Amended 63191
1952.313 (b) amended 63190
1952.314 (b) amended 63190
1980 Revised; interim 68092
1980.102 Second (b)(1)(ii) correctly redesignated as (b)(1)(iii); interim 78151

29 CFR—Continued

76 FR Page

Chapter XX

2205 Revised 39285

Chapter XXV

2520 Policy statement..... 18649
2550 Authority citation revised..... 66162
2550.404a–5 (j)(3)(i) revised..... 42542
2550.408b–2 Regulation at 75 FR 41635 eff. date delayed to 4–1–12; (c)(1)(xii) amended..... 42542
2550.408g–1 Added..... 66162
2550.408g–2 Added..... 66167
2570 Authority citation revised..... 66644
2570.30—2570.52 (Subpart B) Revised..... 66644
2590.715–2713 (a)(1)(iv) revised; interim..... 46625
2590.715–2719 (b)(2)(ii)(B), (E)(*1*), (F), (c)(2)(xi), (3), (d)(1), (2)(iv) and (e) revised; (b)(2)(ii)(E)(*2*), (*3*) and (*4*) redesignated as (b)(2)(ii)(E)(*3*), (*4*) and (*5*); new (b)(2)(ii)(E)(*2*) added; interim; eff. 7–22–11..... 37230
(d)(1)(ii) corrected..... 44492

Chapter XL

4001.2 Amended; eff. 7–14–11 34601
4011 Removed 45403
4022.2 Amended; eff. 7–14–11 34601
4022.3 Introductory text, (a), (b) and (c) redesignated as (a) introductory text, (1), (2) and (3); new (b) added; eff. 7–14–11..... 34601
4022.4 (a)(1) amended; (a)(2) revised; (c) added; eff. 7–14–11 34602
4022.6 (a) amended; (d) added; eff. 7–14–11 34602
4022.21 (a)(1) amended; (e) added; eff. 7–14–11..... 34602
4022.22 Revised; eff. 7–14–11 34602
4022.23 (g) added; eff. 7–14–11 34603
4022.24 (f) added; eff. 7–14–11 34603
4022.25 (f) added; eff. 7–14–11 34603
4022.51 (Subpart C) Heading revised; eff. 7–14–11 34603
4022.51 Added; eff. 7–14–11 34603
4022.61 (c) and (f) introductory text amended; eff. 7–14–11 34604
4022.62 (b)(1) and (2) revised; (e) redesignated as (f); new (f) introductory text amended; (b)(5) and new (e) added; eff. 7–14–11..... 34604

29 CFR—Continued

76 FR Page

Chapter XL—Continued

4022.63 (c) introductory text, (1) and (2) redesignated as (c)(1) introductory text, (i) and (ii); (b)(3) and new (c)(2) added; (e) amended; eff. 7–14–11 34604
4022.81 (c)(3) and (4) redesignated as (c)(4) and (5); new (c)(3) added; eff. 7–14–11 34604
4022.82 (a)(1) revised; eff. 7–14–11..... 34604
4022 Appendix B amended..... 2579, 8650, 13883, 21252, 27890, 34847, 41690, 50413, 56974, 63836, 70640, 77900
Appendix C amended 2579, 8650, 13883, 21252, 27890, 34848, 41690, 50413, 56974, 63836, 70640, 77901
4042.5 Correctly added; CFR correction 18388
4044 Authority citation revised..... 34605
4044.1 (b)(1) and (2) amended; eff. 7–14–11 34605
4044.2 (a), (b) and (e) amended; eff. 7–14–11 34605
4044.3 (b) amended; eff. 7–14–11 34605
4044.10 (b) amended; eff. 7–14–11..... 34605
4044.13 (a) revised; (b)(2)(i) and (ii) amended; (c) added; eff. 7–14–11..... 34605
4044.14 Amended; eff. 7–14–11..... 34606
4044.41 (a)(2) amended; eff. 7–14–11..... 34606
4044.71 Amended; eff. 7–14–11..... 34606
4044.72 (a)(2) amended; eff. 7–14–11..... 34606
4044.73 (b) amended; note removed; eff. 7–14–11 34606
4044.75 (a) amended; note removed; eff. 7–14–11 34606
4044 Appendix B amended.... 13884, 34848, 56975, 77901
Appendix B corrected; CFR correction..... 18869
Appendix D amended 74699

2012

29 CFR

77 FR Page

Chapter XVII

1952 Authority citation revised..... 58490
1952.313 Removed..... 58490
1952.314 Revised 58490
1978 Revised 44134
1983 Revised 40503

29 CFR—Continued

77 FR Page

Chapter XXV

2550.408b–2 (c) revised 5655
2550.408b-2 (c)(1)(ix)(F) revised 41680
2590 Policy statement 8706
2590.715–2713 Regulation at 76 FR 46625 confirmed 8730
2590.715-2715 Added 8700

Chapter XXVII

2700.1 (a)(1) amended 48430
2700.4 (b)(1) amended 48430
2700.5 (b)(1) and (i) amended 48430
2700.82 (d) amended 48430
2701.4 Amended 48430
2702.2 Revised 48430
2702.3 (a) amended 48430
2702.4 (a) amended 48430
2704.201 (a) amended 48430
2704.308 (b) amended 48430
2705.4 Amended 48430
2705.8 Amended 48430
2706.170 (c) amended 48431

Chapter XL

4003.1 (a) amended; (b)(5) through (10) redesignated as (b)(6) through (11); new (b)(5) added 22489
4007 Policy statement 6675
4007.5 Correctly reinstated; CFR correction 20295
4022 Appendix B amended 2016, 8731, 15257, 22215, 28477, 35838, 41270, 48855, 56771, 62434, 68685, 74354
Appendix C amended 2016, 8731, 15257, 22215, 28478, 35839, 41271, 48856, 56771, 62434, 68686, 74354
4044 Appendix B corrected 14275, 14276
Appendix B amended 15257, 35839, 56771, 75550
Appendix D amended 71322

2013

29 CFR

78 FR Page

Chapter XVII

1960.2 (b) revised 47190
1960.7 (b) revised 47190
1960.30 (f) added 47190
1960.66 (f) added 47190
1960.71 (a)(1) and (b) revised 47190
1960.72 Added 47190
1960.73 Added 47191
1984 Added; interim 13231
1986 Added; interim 8402

29 CFR—Continued

78 FR Page

Chapter XXV

2510 Authority citation revised 39894
2510.3-16 Added 39894
2520 Authority citation revised 13792
2520.101-2 Revised 13792
2520.103-1 (a) introductory text, (b) introductory text and (c)(1) revised; (c)(2)(ii)(C) and (D) amended; (f) redesignated as (g); (c)(2)(ii)(E) and new (f) added 13796
2520.104-20 (b)(2)(iii) and (3)(ii) amended; (b)(4) added 13796
2520.104-41 (c) revised 13796
2560 Authority citation revised 13805
2560.521-1 Added 13805
2560.521-2 Added 13805
2560.521-3 Added 13805
2560.521-4 Added 13805
2571 Added 13808
2590 Authority citation revised 39894, 68276
2590.702 (f) revised; eff. 8-2-13 33181
2590.712 Revised 68276
2590.715-2705 Added; eff. 8-2-13 33186
2590.715-2713 (a)(1) introductory text and (iv) revised 39894
2590.715-2713A Added 39894
2590.715-2719 (d) introductory text amended; (d)(1)(i) revised 68286

Chapter XXVII

2700.3 (c) revised; interim 77356
2700.5 Revised; interim 77356
2700.6 Revised; interim 77357
2700.7 Revised; interim 77357
2700.8 Revised; interim 77358
2700.9 (a) revised; interim 77358
2700.24 (d) revised; interim 77358
2700.31 (d) revised; interim 77358
2700.45 (a), (b) and (f) revised; interim 77359
2700.46 (d) added; interim 77359
2700.70 (f) revised; interim 77359
2700.75 (f) revised; interim 77359

Chapter XL

4022 Appendix B amended 2882, 11093, 16402, 22192, 28491, 42009, 49683, 56604, 62427, 68740, 75897
Appendix C amended 2882, 11093, 16402, 22192, 28491, 42009, 49683, 56604, 62427, 68740, 75898
Appendix C correctly amended 8985

29 CFR—Continued

78 FR Page

Chapter XL—Continued
Appendix B amended 35755
Appendix C amended 35755
4044 Appendix B amended....16402, 35755, 56605, 75898
Appendix D amended 72019

2014

(Regulations published from January 1, 2014, through July 1, 2014)

29 CFR

79 FR Page

Chapter XVII
1952.314 (b) revised....8857
1985 Added; interim 18639
1987 Added; interim 8627

Chapter XXV
2590.701-1 (b) revised....10308
2590.701-2 Amended 10308
2590.701-3 Heading, (a) heading and (b) revised; (a)(1) heading, (2), (3), (c), (d), (e) and (f) removed; (a)(1)(i) and (ii) redesignated as (a)(1) and (2); new (a)(2) amended 10308
2590.701-4 (a)(3) and (c) removed; (b) revised....10309
2590.701-5 Revised 10309
2590.701-6 (a)(3)(i)(E) removed; (a)(3)(i)(C), (D), (4)(i) and (d)(2) revised 10309
2590.701-7 Revised 10309
2590.702 (b)(1)(i) and (2)(i)(B) revised; (b)(2)(i)(D), (d)(4), (e)(2)(i)(B) and (g)(1)(ii) amended; (b)(3) removed....10309
2590.715-2708 Added 10311
(c)(3)(iii) and (f) *Example 11* added; eff. 8-25-14 35947
2590.731 (c)(2) revised 10312
2590.732 (b)(2)(i) removed; (b)(2)(ii) through (ix) redesignated as (b)(2)(i) through (viii)....10312

Chapter XXVII
2700.3 Regulation at 78 FR 77356 comment period extended....20098
2700.5 Regulation at 78 FR 77356 comment period extended....20098
2700.6 Regulation at 78 FR 77357 comment period extended....20098
2700.7 Regulation at 78 FR 77357 comment period extended....20098
2700.8 Regulation at 78 FR 77358 comment period extended....20098

29 CFR—Continued

79 FR Page

Chapter XXVII—Continued
2700.9 Regulation at 78 FR 77358 comment period extended....20098
2700.24 Regulation at 78 FR 77358 comment period extended....20098
2700.31 Regulation at 78 FR 77358 comment period extended....20098
2700.45 Regulation at 78 FR 77359 comment period extended....20098
2700.46 Regulation at 78 FR 77359 comment period extended....20098
2700.70 Regulation at 78 FR 77359 comment period extended....20098
2700.75 (f) and (g) correctly revised; interim....3105
Regulation at 78 FR 77359 and 79 FR 3105 comment period extended 20098

Chapter XL
4000.3 (b)(1)(i) removed; (b)(1)(ii), (iii) and (iv) redesignated as new (b)(1)(i), (ii) and (iii) 13559
4006.2 Amended....13559
4006.3 Introductory text amended; (a) and (b) revised; (c) and (d) removed....13559
4006.4 (a), (b)(2) introductory text and (ii) amended; (b)(3) added....13560
4006.5 (a) introductory text, (3) introductory text, (ii), (e)(2)(ii) and (f)(1) amended; (a)(4) added; (c), (d), (e)(1) and (g) revised....13560
4006.7 (b) amended....13561
4007.2 (a) and (b) amended....13561
4007.3 (a) revised; (b) amended 13561
4007.8 (f), (g), (h) and (i) removed 350
(a) introductory text amended; (f) through (i) removed; new (f) added; (j) redesignated as new (g); (a)(1), (2) and new (g) introductory text revised 13561
4007.11 (a) introductory text and (3)(ii) amended; (a)(3)(i) and (iii) removed....350
Revised....13561
4007.12 (b) revised....13562
4007.13 (a)(1) introductory text, (2) introductory text, (d)(1), (e)(3) introductory text, (4) introductory text, (i) and (f) introductory text amended 13562
4007 Appendix amended 13562
4022.2 Amended....25672
4022.24 (e) revised 25672

29 CFR—Continued

79 FR Page

Chapter XL—Continued

4022.27 Redesignated as 4022.28; new 4022.27 added 25672

4022.28 Redesignated from 4022.27 25672

4022.62 (c)(2)(i) amended 25674

4022 Appendix B amended 2591, 8857, 15009, 21128, 27732, 33861

Appendix C amended 2592, 8857, 15010, 21128, 27732, 33861

4041A.24 Heading and (a) revised; (b) introductory text amended 30462

4044 Appendix B amended 15010, 33862

4047.4 (c) amended 13562

29 CFR—Continued

79 FR Page

Chapter XL—Continued

4231.8 (a)(1) introductory text and (f)(1) amended 30463

4281.43 Heading revised; (b), (d) and (f) removed; (c) and (e) redesignated as new (b) and (c) 30463

4281.44 Heading revised; (a)(4), (c) and (d) removed; (a)(5) through (13) redesignated as new (a)(4) through (12) 30463

4281.46 (a) introductory text amended 30463

4281.47 (c) introductory text amended 30463