AUTHENTICATED
U.S. GOVERNMENT
INFORMATION
GPO

be extended to encompass the proposed change. The application shall be accompanied by drawings, specifications, and related material.

(2) The application and accompanying material will be examined by NIOSH to determine whether testing of the modified CMDPSU or CPDM or components will be required. Testing will be necessary if there is a possibility that the modification may adversely affect the performance of the CMDPSU or CPDM. NIOSH will inform the applicant whether such testing is required.

(3) If the proposed modification meets the pertinent requirements of these regulations, a formal extension of certification will be issued, accompanied by a list of new and revised drawings and specifications to be added to those already on file as the basis for the extension of certification.

(b) If a change is proposed in a pump unit of a certified CMDPSU or in electrical components of a CPDM, the approval of MSHA with respect to intrinsic safety shall be obtained in accordance with the procedures set forth in §74.11(d).

§74.18 Withdrawal of certification.

Any certificate of approval issued under this part may be revoked for cause by NIOSH or MSHA which issued the certificate.

PART 75—MANDATORY SAFETY STANDARDS—UNDERGROUND COAL MINES

Subpart A—General

Sec.
75.1 Scope.
75.2 Definitions.

Subpart B—Qualified and Certified Persons

75.100 Certified person.
75.150 Tests for methane and for oxygen deficiency; qualified person.
75.151 Tests for methane; qualified person; additional requirement.
75.152 Tests of air flow; qualified person.
75.153 Electrical work; qualified person.
75.154 Repair of energized surface high voltage lines; qualified person.
75.155 Qualified hoisting engineer; qualifications.
75.156 AMS operator, qualifications.
75.159 Records of certified and qualified persons.
75.160 Training programs.
75.161 Plans for training programs.

Subpart C—Roof Support

75.200 Scope.
75.201 Definitions.
75.202 Protection from falls of roof, face and ribs.
75.203 Mining methods.
75.204 Roof bolting.
75.205 Installation of roof support using mining machines with integral roof bolters.
75.206 Conventional roof support.
75.207 Pillar recovery.
75.208 Warning devices.
75.209 Automated Temporary Roof Support (ATRS) systems.
75.210 Manual installation of temporary support.
75.211 Roof testing and scaling.
75.212 Rehabilitation of areas with unsupported roof.
75.213 Roof support removal.
75.214 Supplemental support materials, equipment and tools.
75.215 Longwall mining systems.
75.220 Roof control plan.
75.221 Roof control plan information.
75.222 Roof control plan—approval criteria.
75.223 Evaluation and revision of roof control plan.

Subpart D—Ventilation

75.300 Scope.
75.301 Definitions.
75.302 Main mine fans.
75.310 Installation of main mine fans.
75.311 Main mine fan operation.
75.312 Main mine fan examinations and records.
75.313 Main mine fan stoppage with persons underground.
75.320 Air quality detectors and measurement devices.
75.321 Air quality.
75.322 Harmful quantities of noxious gases.
75.323 Actions for excessive methane.
75.324 Intentional changes in the ventilation system.
75.325 Air quantity.
75.326 Mean entry air velocity.
75.327 Air courses and trolley haulage systems.
75.330 Face ventilation control devices.
75.331 Auxiliary fans and tubing.
75.332 Working sections and working places.
75.333 Ventilation controls.
75.334 Worked-out areas and areas where pillars are being recovered.
75.335 Seal strengths, design applications, and installation.
75.336 Sampling and monitoring requirements.

75.337 Construction and repair of seals.
75.338 Training.
75.339 Seals records.
75.340 Underground electrical installations.
75.341 Direct-fired intake air heaters.
75.342 Methane monitors.
75.343 Underground shops.
75.344 Compressors.
75.350 Belt air course ventilation.
75.351 Atmospheric monitoring systems.
75.352 Actions in response to AMS malfunction, alert, or alarm signals.
75.360 Preshift examination at fixed intervals.
75.361 Supplemental examination.
75.362 On-shift examination.
75.363 Hazardous conditions and violations of mandatory health or safety standards; posting, correcting, and recording.
75.364 Weekly examination.
75.370 Mine ventilation plan; submission and approval.
75.371 Mine ventilation plan; contents.
75.372 Mine ventilation map.
75.373 Reopening mines.
75.380 Escapeways; bituminous and lignite mines.
75.381 Escapeways; anthracite mines.
75.382 Mechanical escape facilities.
75.384 Longwall and shortwall travelways.
75.385 Opening new mines.
75.386 Final mining of pillars.
75.388 Boreholes in advance of mining.
75.389 Mining into inaccessible areas.

Subpart E—Combustible Materials and Rock Dusting

75.400 Accumulation of combustible materials.
75.400–1 Definitions.
75.400–2 Cleanup program.
75.401 Abatement of dust; water or water with a wetting agent.
75.401–1 Excessive amounts of dust.
75.402 Rock dusting.
75.402–1 Definition.
75.402–2 Exceptions.
75.403 Maintenance of incombustible content of rock dust.
75.403–1 Incombustible content.
75.404 Exemption of anthracite mines.

Subpart F—Electrical Equipment—General

75.500 Permissible electric equipment.
75.500–1 Other low horsepower electric face equipment.
75.501 Permissible electric face equipment; coal seams above water table.
75.501–1 Coal seams above the water table.
75.501–2 Permissible electric face equipment.
75.501–3 New openings; mines above water table and never classed gassy.
75.502 Permits for noncompliance.
75.503 Permissible electric face equipment; maintenance.
75.503–1 Statement listing all electric face equipment.
75.504 Permissibility of new, replacement, used, reconditioned, additional, and rebuilt electric face equipment.
75.505 Mines classed gassy; use and maintenance of permissible electric face equipment.
75.506 Electric face equipment; requirements for permissibility.
75.506–1 Electric face equipment; permissible condition; maintenance requirements.
75.507 Power connection points.
75.507–1 Electric equipment other than power-connection points; outby the last open crosscut; return air; permissibility requirements.
75.508 Map of electrical system.
75.508–1 Mine tracks.
75.508–2 Changes in electric system map; recording.
75.509 Electric power circuit and electric equipment; deenergization.
75.510 Energized trolley wires; repair.
75.510–1 Repair of energized trolley wires; training.
75.511 Low-, medium-, or high-voltage distribution circuits and equipment; repair.
75.511–1 Qualified person.
75.512 Electric equipment; examination, testing and maintenance.
75.512–1 Qualified person.
75.512–2 Frequency of examinations.
75.513 Electric conductor; capacity and insulation.
75.513–1 Electric conductor; size.
75.514 Electrical connections or splices; suitability.
75.515 Cable fittings; suitability.
75.516 Power wires; support.
75.516–1 Installed insulators.
75.516–2 Communication wires and cables; installation; insulation; support.
75.517 Power wires and cables; insulation and protection.
75.517–1 Power wires and cables; insulation and protection.
75.517–2 Plans for insulation of existing bare power wires and cables.
75.518 Electric equipment and circuits; overload and short circuit protection.
75.518–1 Electric equipment and circuits; overload and short circuit protection; minimum requirements.
75.518–2 Incandescent lamps; overload and short circuit protection.
75.519 Main power circuits; disconnecting switches.
75.519–1 Main power circuits; disconnecting switches; locations.
75.520 Electric equipment; switches.
75.521 Lightning arresters; ungrounded and exposed power conductors and telephone wires.
75.522 Lighting devices.

75.522–1 Incandescent and fluorescent lamps.
75.523 Electric face equipment; deenergization.
75.523–1 Deenergization of self-propelled electric face equipment installation requirements.
75.523–2 Deenergization of self-propelled electric face equipment; performance requirements.
75.523–3 Automatic emergency-parking brakes.
75.524 Electric face equipment; electric equipment used in return air outby the last open crosscut; maximum level of alternating or direct electric current between frames of equipment.
APPENDIX A TO SUBPART F—LIST OF PERMISSABLE ELECTRIC FARE EQUIPMENT APPROVED BY THE BUREAU OF MINES PRIOR TO MAY 23, 1936

Subpart G—Trailing Cables

75.600 Trailing cables; flame resistance.
75.600–1 Approved cables; flame resistance.
75.601 Short circuit protection of trailing cables.
75.601–1 Short circuit protection; ratings and settings of circuit breakers.
75.601–2 Short circuit protection; use of fuses; approval by the Secretary.
75.601–3 Short circuit protection; dual element fuses; current ratings; maximum values.
75.602 Trailing cable junctions.
75.603 Temporary splice of trailing cable.
75.604 Permanent splicing of trailing cables.
75.605 Clamping of trailing cables to equipment.
75.606 Protection of trailing cables.
75.607 Breaking trailing cable and power cable connections.

Subpart H—Grounding

75.700 Grounding metallic sheaths, armors and conduits enclosing power conductors.
75.700–1 Approved methods of grounding.
75.701 Grounding metallic frames, casings and other enclosures of electric equipment.
75.701–1 Approved methods of grounding of equipment receiving power from ungrounded alternating current power systems.
75.701–2 Approved method of grounding metallic frames, casings and other enclosures receiving power from single-phase 110–220-volt circuit.
75.701–3 Approved methods of grounding metallic frames, casings and other enclosures of electric equipment receiving power from direct current power systems with one polarity grounded.
75.701–4 Grounding wires; capacity of wires.
75.701–5 Use of grounding connectors.
75.702 Protection other than grounding.
75.702–1 Protection other than grounding; approved by an authorized representative of the Secretary.
75.703 Grounding offtrack direct-current machines and enclosures of related detached components.
75.703–1 Approved method of grounding.
75.703–2 Approved grounding mediums.
75.703–3 Approved methods of grounding offtrack mobile, portable and stationary direct-current machines.
75.703–4 Other methods of protecting offtrack direct-current equipment; approved by an authorized representative of the Secretary.
75.704 Grounding frames of stationary high-voltage equipment receiving power from ungrounded delta systems.
75.704–1 Approved methods of grounding.
75.705 Work on high-voltage lines; deenergizing and grounding.
75.705–1 Work on high-voltage lines.
75.705–2 Repairs to energized surface high-voltage lines.
75.705–3 Work on energized high-voltage surface lines; reporting.
75.705–4 Simultaneous repairs.
75.705–5 Installation of protective equipment.
75.705–6 Protective clothing; use and inspection.
75.705–7 Protective equipment; inspection.
75.705–8 Protective equipment; testing and storage.
75.705–9 Operating disconnecting or cutout switches.
75.705–10 Tying into energized high-voltage surface circuits.
75.705–11 Use of grounded messenger wires; ungrounded systems.
75.706 Deenergized underground power circuits; idle days—idle shifts.

Subpart I—Underground High-Voltage Distribution

75.800 High-voltage circuits; circuit breakers.
75.800–1 Circuit breakers; location.
75.800–2 Approved circuit schemes.
75.800–3 Testing, examination and maintenance of circuit breakers; procedures.
75.800–4 Testing, examination, and maintenance of circuit breakers; record.
75.801 Grounding resistors.
75.802 Protection of high-voltage circuits extending underground.
75.803 Fail safe ground check circuits on high-voltage resistance grounded systems.
75.803–1 Maximum voltage ground check circuits.
75.803–2 Ground check systems not employing pilot check wires; approval by the Secretary.
75.804 Underground high-voltage cables.

75.805 Couplers.
75.806 Connection of single-phase loads.
75.807 Installation of high-voltage transmission cables.
75.808 Disconnecting devices.
75.809 Identification of circuit breakers and disconnecting switches.
75.810 High-voltage trailing cables; splices.
75.811 High-voltage underground equipment; grounding.
75.812 Movement of high-voltage power centers and portable transformers; permit.
75.812–1 Qualified person.
75.812–2 High-voltage power centers and transformers; record of examination.

HIGH-VOLTAGE LONGWALLS

75.813 High-voltage longwalls; scope.
75.814 Electrical protection.
75.815 Disconnect devices.
75.816 Guarding of cables.
75.817 Cable handling and support systems.
75.818 Use of insulated cable handling equipment.
75.819 Motor-starter enclosures; barriers and interlocks.
75.820 Electrical work; troubleshooting and testing.
75.821 Testing, examination and maintenance.
75.822 Underground high-voltage longwall cables.
75.823 Scope.
75.824 Electrical protection.
75.825 Power centers.
75.826 High-voltage trailing cables.
75.827 Guarding of trailing cables.
75.828 Trailing cable pulling.
75.829 Tramming continuous mining machines in and out of the mine and from section to section.
75.830 Splicing and repair of trailing cables.
75.831 Electrical work; troubleshooting and testing.
75.832 Frequency of examinations; recordkeeping.
75.833 Handling high-voltage trailing cables.
75.834 Training.

APPENDIX A TO SUBPART I—DIAGRAMS OF INBY AND OUTBY SWITCHING

Subpart J—Underground Low- and Medium-Voltage Alternating Current Circuits

75.900 Low- and medium-voltage circuits serving three-phase alternating current equipment; circuit breakers.
75.900–1 Circuit breakers; location.
75.900–2 Approved circuit schemes.
75.900–3 Testing, examination and maintenance of circuit breakers; procedures.
75.900–4 Testing, examination and maintenance of circuit breakers; record.
75.901 Protection of low- and medium-voltage three-phase circuits used underground.
75.902 Low- and medium-voltage ground check monitor circuits.
75.902–1 Maximum voltage ground check circuits.
75.902–2 Approved ground check systems not employing pilot check wires.
75.902–4 Attachment of ground conductors and ground check wires to equipment frames; use of separate connections.
75.903 Disconnecting devices.
75.904 Identification of circuit breakers.
75.905 Connection of single-phase loads.
75.906 Trailing cables for mobile equipment, ground wires and ground check wires.
75.907 Design of trailing cables for medium-voltage circuits.

APPENDIX A TO SUBPART J

Subpart K—Trolley Wires and Trolley Feeder Wires

75.1000 Cutout switches.
75.1001 Overcurrent protection.
75.1001–1 Devices for overcurrent protection; testing and calibration requirements; records.
75.1002 Installation of electric equipment and conductors; permissibility.
75.1003 Insulation of trolley wires, trolley feeder wires and bare signal wires; guarding of trolley wires and trolley feeder wires.
75.1003–1 Other requirements for guarding of trolley wires and trolley feeder wires.
75.1003–2 Requirements for movement of off-track mining equipment in areas of active workings where energized trolley wires or trolley feeder wires are present; pre-movement requirements; certified and qualified persons.

Subpart L—Fire Protection

75.1100 Requirements.
75.1100–1 Type and quality of firefighting equipment.
75.1100–2 Quantity and location of firefighting equipment.
75.1100–3 Condition and examination of firefighting equipment.
75.1101 Deluge-type water sprays, foam generators; main and secondary belt-conveyor drives.
75.1101–1 Deluge-type water spray systems.
75.1101–2 Installation of deluge-type sprays.
75.1101–3 Water requirements.
75.1101–4 Branch lines.
75.1101–5 Installation of foam generator systems.
75.1101–6 Water sprinkler systems; general.
75.1101–7 Installation of water sprinkler systems; requirements.
75.1101–8 Water sprinkler systems; arrangement of sprinklers.
75.1101–9 Back-up water system.
75.1101–10 Water sprinkler systems; fire warning devices at belt drives.

75.1101–11 Inspection of water sprinkler systems.
75.1101–12 Equivalent dry-pipe system.
75.1101–13 Dry powder chemical systems; general.
75.1101–14 Installation of dry powder chemical systems.
75.1101–15 Construction of dry powder chemical systems.
75.1101–16 Dry powder chemical systems; sensing and fire suppression devices.
75.1101–17 Sealing of dry powder chemical systems.
75.1101–18 Dry powder requirements.
75.1101–19 Nozzles; flow rate and direction.
75.1101–20 Safeguards for dry powder chemical systems.
75.1101–21 Back-up water system.
75.1101–22 Inspection of dry powder chemical systems.
75.1102 Slippage and sequence switches.
75.1103 Automatic fire warning devices.
75.1103–1 Automatic fire sensors.
75.1103–2 Automatic fire sensors; approved components; installation requirements.
75.1103–3 Automatic fire sensor and warning device systems; minimum requirements; general.
75.1103–4 Automatic fire sensor and warning device systems; installation; minimum requirements.
75.1103–5 Automatic fire warning devices; actions and response.
75.1103–6 Automatic fire sensors; actuation of fire suppression systems.
75.1103–7 Electrical components; permissibility requirements.
75.1103–8 Automatic fire sensor and warning device systems; examination and test requirements.
75.1103–9 Minimum requirements; fire suppression materials and location; maintenance of entries and crosscuts; access doors; communications; fire crews: high-expansion foam devices.
75.1103–10 Fire suppression systems; additional requirements.
75.1103–11 Tests of fire hydrants and fire hose; record of tests.
75.1104 Underground storage, lubricating oil and grease.
75.1106 Welding, cutting, or soldering with arc or flame underground.
75.1106–1 Test for methane.

TRANSPORTATION, HANDLING AND STORAGE OF LIQUEFIED AND NONLIQUEFIED COMPRESSED GAS CYLINDERS

75.1106–2 Transportation of liquefied and nonliquefied compressed gas cylinders; requirements.
75.1106–3 Storage of liquefied and nonliquefied compressed gas cylinders; requirements.
75.1106–4 Use of liquefied and nonliquefied compressed gas cylinders; general requirements.
75.1106–5 Maintenance and tests of liquefied and nonliquefied compressed gas cylinders; accessories and equipment; requirements.
75.1106–6 Exemption of small low pressure gas cylinders containing nonflammable or nonexplosive gas mixtures.

FIRE SUPPRESSION DEVICES AND FIRE-RESISTANT HYDRAULIC FLUIDS ON UNDERGROUND EQUIPMENT

75.1107 Fire suppression devices.
75.1107–1 Fire-resistant hydraulic fluids and fire suppression devices on underground equipment.
75.1107–2 Approved fire-resistant hydraulic fluids; minimum requirements.
75.1107–3 Fire suppression devices; approved components; installation requirements.
75.1107–4 Automatic fire sensors and manual actuators; installation; minimum requirements.
75.1107–5 Electrical components of fire suppression devices; permissibility requirements.
75.1107–6 Capacity of fire suppression devices; location and direction of nozzles.
75.1107–7 Water spray devices; capacity; water supply; minimum requirements.
75.1107–8 Fire suppression devices; extinguishant supply systems.
75.1107–9 Dry chemical devices; capacity; minimum requirements.
75.1107–10 High expansion foam devices; minimum capacity.
75.1107–11 Extinguishing agents; requirements on mining equipment employed in low coal.
75.1107–12 Inerting of mine atmosphere prohibited.
75.1107–13 Approval of other fire suppression devices.
75.1107–14 Guards and handrails; requirements where fire suppression devices are employed.
75.1107–15 Fire suppression devices; hazards; training of miners.
75.1107–16 Inspection of fire suppression devices.
75.1107–17 Incorporation by reference; availability of publications.
75.1108 Approved conveyor belts.

Subpart M—Maps

75.1200 Mine map.
75.1200–1 Additional information on mine map.
75.1200–2 Accuracy and scale of mine maps.
75.1201 Certification.
75.1202 Temporary notations, revisions, and supplements.
75.1202–1 Temporary notations, revisions, and supplements.
75.1203 Availability of mine map.
75.1204 Mine closure; filing of map with Secretary.

75.1204–1 Places to give notice and file maps.

Subpart N—Explosives and Blasting

75.1300 Definitions.
75.1301 Qualified person.
75.1310 Explosives and blasting equipment.
75.1311 Transporting explosives and detonators.
75.1312 Explosives and detonators in underground magazines.
75.1313 Explosives and detonators outside of magazines.
75.1314 Sheathed explosive units.
75.1315 Boreholes for explosives.
75.1316 Preparation before blasting.
75.1317 Primer cartridges.
75.1318 Loading boreholes.
75.1319 Weight of explosives permitted in boreholes in bituminous and lignite mines.
75.1320 Multiple-shot blasting.
75.1321 Permit for firing more than 20 boreholes and to use nonpermissible blasting units.
75.1322 Stemming boreholes.
75.1323 Blasting circuits.
75.1324 Methane concentration and tests.
75.1325 Firing procedure.
75.1326 Examination after blasting.
75.1327 Misfires.
75.1328 Damaged or deteriorated explosives and detonators.

Subpart O—Hoisting and Mantrips

75.1400 Hoisting equipment; general.
75.1400–1 Hoists; brakes, capability.
75.1400–2 Hoists; tests of safety catches; records.
75.1400–3 Daily examination of hoisting equipment.
75.1400–4 Certifications and records of daily examinations.
75.1401 Hoists; rated capacities; indicators.
75.1401–1 Hoists; indicators.
75.1402 Communication between shaft stations and hoist room.
75.1402–1 Communication between shaft stations and hoist room.
75.1402–2 Tests of signaling systems.
75.1403 Other safeguards.
75.1403–1 General criteria.
75.1403–2 Criteria—Hoists transporting materials; brakes.
75.1403–3 Criteria—Drum clutch; cage construction.
75.1403–4 Criteria—Automatic elevators.
75.1403–5 Criteria—Belt conveyors.
75.1403–6 Criteria—Self-propelled personnel carriers.
75.1403–7 Criteria—Mantrips.
75.1403–8 Criteria—Track haulage roads.
75.1403–9 Criteria—Shelter holes.
75.1403–10 Criteria—Haulage; general.
75.1403–11 Criteria—Entrances to shafts and slopes.
75.1404 Automatic brakes; speed reduction gear.
75.1404–1 Braking system.
75.1405 Automatic couplers.
75.1405–1 Automatic couplers, haulage equipment.

WIRE ROPES

75.1429 Guide ropes.
75.1430 Wire ropes; scope.
75.1431 Minimum rope strength.
75.1432 Initial measurement.
75.1433 Examinations.
75.1434 Retirement criteria.
75.1435 Load end attachments.
75.1436 Drum end attachment.
75.1437 End attachment retermination.
75.1438 End attachment replacement.

Subpart P—Mine Emergencies

75.1500 [Reserved]
75.1501 Emergency evacuations.
75.1502 Mine emergency evacuation and firefighting program of instruction.
75.1503 Use of fire suppression equipment.
75.1504 Mine emergency evacuation training and drills.
75.1505 Escapeway maps.
75.1506 Refuge alternatives.
75.1507 Emergency Response Plan; refuge alternatives.
75.1508 Training and records for examination, maintenance and repair of refuge alternatives and components.

Subpart Q—Communications

75.1600 Communications.
75.1600–1 Communication facilities; main portals; installation requirements.
75.1600–2 Communication facilities; working sections; installation and maintenance requirements; audible or visual alarms.
75.1600–3 Communications facilities; refuge alternatives.

Subpart R—Miscellaneous

75.1700 Oil and gas wells.
75.1702 Smoking; prohibition.
75.1702–1 Smoking programs.
75.1703 Portable electric lamps.
75.1703–1 Permissible lamps.
75.1707–1 New working section.
75.1708 Surface structures, fireproofing.
75.1708–1 Surface structures; fireproof construction.
75.1709 Accumulations of methane and coal dust on surface coal-handling facilities.
75.1710 Canopies or cabs; diesel-powered and electric face equipment.
75.1710–1 Canopies or cabs; self-propelled diesel-powered and electric face equipment; installation requirements.
75.1711 Sealing of mines.
75.1711–1 Sealing of shaft openings.

75.1711–2 Sealing of slope or drift openings.
75.1711–3 Openings of active mines.
75.1712 Bath houses and toilet facilities.
75.1712–1 Availability of surface bathing facilities; change rooms; and sanitary facilities.
75.1712–2 Location of surface facilities.
75.1712–3 Minimum requirements of surface bathing facilities, change rooms, and sanitary toilet facilities.
75.1712–4 Waiver of surface facilities requirements.
75.1712–5 Application for waiver of surface facilities.
75.1712–6 Underground sanitary facilities; installation and maintenance.
75.1712–7 Underground sanitary facilities; waiver of requirements.
75.1712–8 Application for waiver of location requirements for underground sanitary facilities.
75.1712–9 Issuance of waivers.
75.1712–10 Underground sanitary facilities; maintenance.
75.1713 Emergency medical assistance; first-aid.
75.1713–1 Arrangements for emergency medical assistance and transportation for injured persons; agreements; reporting requirements; posting requirements.
75.1713–2 Emergency communications; requirements.
75.1713–3 First-Aid training; supervisory employees.
75.1713–4 First-aid training program; availability of instruction to all miners.
75.1713–5 First-aid training program; retraining of supervisory employees; availability to all miners.
75.1713–6 First-aid training program; minimum requirements.
75.1713–7 First-aid equipment; location; minimum requirements.
75.1714 Availability of approved self-rescue devices; instruction in use and location.
75.1714–1 Approved self-rescue devices.
75.1714–2 Self-rescue devices; use and location requirements.
75.1714–3 Self-rescue devices; inspection, testing, maintenance, repair, and recordkeeping.
75.1714–4 Additional self-contained self-rescuers (SCSRs).
75.1714–5 Map locations of self-contained self-rescuers (SCSR).
75.1714–6 Emergency tethers.
75.1714–7 Multi-gas detectors.
75.1714–8 Reporting SCSR inventory and malfunctions; retention of SCSRs.
75.1715 Identification check system.
75.1716 Operations under water.
75.1716–1 Operations under water; notification by operator.
75.1716–2 Permit required.
75.1716–3 Applications for permits.
75.1716–4 Issuance of permits.
75.1717 Exemptions.
75.1718 Drinking water.
75.1718–1 Drinking water; quality.
75.1719 Illumination; purpose and scope of §§75.1719 through 75.1719–4; time for compliance.
75.1719–1 Illumination in working places.
75.1719–2 Lighting fixtures; requirements.
75.1719–3 Methods of measurement; light measuring instruments.
75.1719–4 Mining machines, cap lamps; requirements.
75.1720 Protective clothing; requirements.
75.1720–1 Distinctively colored hard hats, or hard caps; identification for newly employed, inexperienced miners.
75.1721 Opening of new underground coal mines, or reopening and reactivating of abandoned or deactivated coal mines; notification by the operator; requirements.
75.1722 Mechanical equipment guards.
75.1723 Stationary grinding machines; protective devices.
75.1724 Hand-held power tools; safety devices.
75.1725 Machinery and equipment; operation and maintenance.
75.1726 Performing work from a raised position; safeguards.
75.1727 Drive belts.
75.1728 Power-driven pulleys.
75.1729 Welding operations.
75.1730 Compressed air; general; compressed air systems.
75.1731 Maintenance of belt conveyors and belt conveyor entries.

Subpart S [Reserved]

Subpart T—Diesel-Powered Equipment

75.1900 Definitions.
75.1901 Diesel fuel requirements.
75.1902 Underground diesel fuel storage—general requirements.
75.1903 Underground diesel fuel storage facilities and areas; construction and safety precautions.
75.1904 Underground diesel fuel tanks and safety cans.
75.1905 Dispensing of diesel fuel.
75.1905–1 Diesel fuel piping systems.
75.1906 Transport of diesel fuel.
75.1907 Diesel-powered equipment intended for use in underground coal mines.
75.1908 Nonpermissible diesel-powered equipment; categories.
75.1909 Nonpermissible diesel-powered equipment; design and performance requirements.
75.1910 Nonpermissible diesel-powered equipment; electrical system design and performance requirements.
75.1911 Fire suppression systems for diesel-powered equipment and diesel fuel transportation units.

75.1912 Fire suppression systems for permanent underground diesel fuel storage facilities.
75.1913 Starting aids.
75.1914 Maintenance of diesel-powered equipment.
75.1915 Training and qualification of persons working on diesel-powered equipment.
75.1916 Operation of diesel-powered equipment.

AUTHORITY: 30 U.S.C. 811.

EFFECTIVE DATE NOTE: At 79 FR 24987, May 1, 2014, authority citation for part 75 was revised, effective Aug. 1, 2014. For the convenience of the user, the revised text is set forth as follows:

AUTHORITY: 30 U.S.C. 811, 813(h), 957.

SOURCE: 35 FR 17890, Nov. 20, 1970, unless otherwise noted.

EDITORIAL NOTE: The provisions of this part marked [Statutory Provision] appear in Title III of the Federal Coal Mine Health and Safety Act of 1969.

Subpart A—General

§ 75.1 Scope.

This part 75 sets forth safety standards compliance with which is mandatory in each underground coal mine subject to the Federal Mine Safety and Health Act of 1977. Some standards also are applicable to surface operations. Regulations and criteria supplementary to these standards also are set forth in this part.

[35 FR 17890, Nov. 20, 1970, as amended at 43 FR 12319, Mar. 24, 1978]

§ 75.2 Definitions.

The following definitions apply in this part.

Act. The Federal Mine Safety and Health Act of 1977.

Active workings. Any place in a coal mine where miners are normally required to work or travel.

Adequate interrupting capacity. The ability of an electrical protective device, based upon its required and intended application, to safely interrupt values of current in excess of its trip setting or melting point.

Anthracite. Coals with a volatile ratio equal to 0.12 or less. The volatile ratio is the volatile matter content divided by the volatile matter plus the fixed carbon.

Approval documentation. Formal papers issued by the Mine Safety and Health Administration which describe and illustrate the complete assembly of electrical machinery or accessories which have met the applicable requirements of 30 CFR part 18.

Certified or registered. As applied to any person, a person certified or registered by the State in which the coal mine is located to perform duties prescribed by this part 75, except that in a State where no program of certification or registration is provided or where the program does not meet at least minimum Federal standards established by the Secretary, such certification or registration shall be by the Secretary.

Circuit-interrupting device. A device designed to open and close a circuit by nonautomatic means and to open the circuit automatically at a predetermined overcurrent value without damage to the device when operated within its rating.

Coal mine. Includes areas of adjoining mines connected underground.

Filter Self-Rescuer (FSR). A type of gas mask approved by MSHA and NIOSH under 42 CFR part 84 for escape only from underground mines and which provides at least 1 hour of protection against carbon monoxide.

Ground fault or grounded phase. An unintentional connection between an electric circuit and the grounding system.

Low voltage. Up to and including 660 volts, medium voltage means voltages from 661 to 1,000 volts; and high voltage means more than 1,000 volts.

Motor-starter enclosure. An enclosure containing motor starting circuits and equipment.

Nominal voltage. The phase-to-phase or line-to-line root-mean-square value assigned to a circuit or system for designation of its voltage class, such as 480 or 4,160 volts. Actual voltage at which the circuit or system operates may vary from the nominal voltage within a range that permits satisfactory operation of equipment.

Permissible. (1) As applied to electric face equipment, all electrically operated equipment taken into or used inby the last open crosscut of an entry or a room of any coal mine the electrical

parts of which, including, but not limited to, associated electrical equipment, components, and accessories, are designed, constructed, and installed, in accordance with the specifications of the Secretary, to assure that such equipment will not cause a mine explosion or mine fire, and the other features of which are designed and constructed, in accordance with the specifications of the Secretary, to prevent, to the greatest extent possible, other accidents in the use of such equipment. The regulations of the Secretary or the Director of the Bureau of Mines in effect on March 30, 1970, relating to the requirements for investigation, testing, approval, certification, and acceptance of such equipment as permissible shall continue in effect until modified or superseded by the Secretary, except that the Secretary shall provide procedures, including, where feasible, testing, approval, certification, and acceptance in the field by an authorized representative of the Secretary, to facilitate compliance by an operator with the requirements of § 75.500 within the periods prescribed in § 75.500.

(2) As applied to equipment other than permissible electric face equipment: (i) Equipment used in the operation of a coal mine to which an approval plate, label, or other device is attached as authorized by the Secretary and which meets specifications which are prescribed by the Secretary for the construction and maintenance of such equipment and are designed to assure that such equipment will not cause a mine explosion or a mine fire. (ii) The manner of use of equipment means the manner of use prescribed by the Secretary.

Qualified person. As the context requires:

(1) An individual deemed qualified by the Secretary and designated by the operator to make tests and examinations required by this part 75; and

(2) An individual deemed, in accordance with minimum requirements to be established by the Secretary, qualified by training, education, and experience, to perform electrical work, to maintain electrical equipment, and to conduct examinations and tests of all electrical equipment.

Respirable dust. Dust collected with a sampling device approved by the Secretary and the Secretary of Health and Human Services in accordance with part 74—Coal Mine Dust Personal Sampler Units of this title. Sampling device approvals issued by the Secretary of the Interior and Secretary of Health, Education, and Welfare are continued in effect.

Rock dust. Pulverized limestone, dolomite, gypsum, anhydrite, shale, adobe, or other inert material, preferably light colored, 100 percent of which will pass through a sieve having 20 meshes per linear inch and 70 percent or more of which will pass through a sieve having 200 meshes per linear inch; the particles of which when wetted and dried will not cohere to form a cake which will not be dispersed into separate particles by a light blast of air; and which does not contain more than 5 percent combustible matter or more than a total of 4 percent free and combined silica (SiO_2), or, where the Secretary finds that such silica concentrations are not available, which does not contain more than 5 percent of free and combined silica.

Secretary. The Secretary of Labor or the Secretary's delegate.

Self-Contained Self-Rescuer (SCSR). A type of closed-circuit, self-contained breathing apparatus approved by MSHA and NIOSH under 42 CFR part 84 for escape only from underground mines.

Short circuit. An abnormal connection of relatively low impedance, whether made accidentally or intentionally, between two points of different potential.

Working face. Any place in a coal mine in which work of extracting coal from its natural deposit in the earth is performed during the mining cycle.

Working place. The area of a coal mine inby the last open crosscut.

Working section. All areas of the coal mine from the loading point of the section to and including the working faces.

[57 FR 20913, May 15, 1992, as amended at 60 FR 30401, June 8, 1995; 67 FR 11001, Mar. 11, 2002]

Subpart B—Qualified and Certified Persons

§ 75.100 Certified person.

(a) The provisions of Subpart D—Ventilation of this part 75 require that certain examinations and tests be made by a certified person. A certified person within the meaning of those provisions is a person who has been certified as a mine foreman (mine manager), an assistant mine foreman (section foreman), or a preshift examiner (mine examiner). A person who has been so certified is also a qualified person within the meaning of those provisions of subpart D of this part which require that certain tests be made by a qualified person and within the meaning of § 75.1106.

(b) A person who is certified as a mine foreman, an assistant mine foreman, or a preshift examiner by the State in which the coal mine is located is, to the extent of the State's certification, a certified person within the meaning of the provisions of subpart D of this part and § 75.1106 referred to in paragraph (a) of this section.

(c)(1) The Secretary may certify persons in the categories of mine foreman, assistant mine foreman, and preshift examiner whenever the State in which persons are presently employed in these categories does not provide for such certification. A person's initial certification by MSHA is valid for as long as the person continues to satisfy the requirements necessary to obtain the certification and is employed at the same coal mine or by the same independent contractor. The mine operator or independent contractor shall make an application which satisfactorily shows that each such person has had at least 2 years underground experience in a coal mine, and has held the position of mine foreman, assistant mine foreman, or preshift examiner for a period of 6 months immediately preceding the filing of the application, and is qualified to test for methane and for oxygen deficiency. Applications for Secretarial certification should be submitted in writing to the Health and Safety Activity, Mine Safety and Health Administration, Certification and Qualification Center, P.O. Box 25367, Denver Federal Center, Denver, Colorado 80225.

(2) A person certified by the Secretary under this paragraph will be a certified person, within the meaning of the provisions for subpart D of this part and § 75.1106 referred to in paragraph (a) of this section, as long as that person continues to satisfy the requirements for qualification or certification and is employed at the same coal mine or by the same independent contractor.

[35 FR 17890, Nov. 20, 1970, as amended at 43 FR 12320, Mar. 24, 1978; 54 FR 30514, July 20, 1989]

§ 75.150 Tests for methane and for oxygen deficiency; qualified person.

(a) The provisions of Subpart D—Ventilation of this part and § 75.1106 require that tests for methane and for oxygen deficiency be made by a qualified person. A person is a qualified person for this purpose if he is a certified person under § 75.100.

(b) Pending issuance of Federal standards, a person will be considered a qualified person for testing for methane and for oxygen deficiency:

(1) If he has been qualified for this purpose by the State in which the coal mine is located; or

(2) The Secretary may qualify persons for this purpose in a coal mine in which persons are not qualified for this purpose by the State upon an application and a satisfactory showing by the operator of the coal mine that each such person has been trained and designated by the operator to test for methane and oxygen deficiency and has made such tests for a period of 6 months immediately preceding the application. Applications for Secretarial qualification should be submitted to the Health and Safety Activity, Mine Safety and Health Administration, Certification and Qualification Center, P.O. Box 25367, Denver Federal Center, Denver, Colo. 80225.

[35 FR 17890, Nov. 20, 1970, as amended at 43 FR 12320, Mar. 24, 1978]

§ 75.151 Tests for methane; qualified person; additional requirement.

Notwithstanding the provisions of § 75.150, on and after January 1, 1971, no person shall be a qualified person for

testing for methane unless he demonstrates to the satisfaction of an authorized representative of the Secretary that he is qualified to test for methane with a portable methane detector approved by the Bureau of Mines or the Mine Safety and Health Administration under part 22 of this chapter (Bureau of Mines Schedule 8C).

§ 75.152 Tests of air flow; qualified person.

A person is a qualified person within the meaning of the provisions of Subpart D—Ventilation of this part requiring that tests of air flow be made by a qualified person only if he is a certified person under § 75.100 or a person trained and designated by a certified person to perform such tests.

§ 75.153 Electrical work; qualified person.

(a) Except as provided in paragraph (f) of this section, an individual is a qualified person within the meaning of §§ 75.511 and 75.512 to perform electrical work (other than work on energized surface high-voltage lines) if:

(1) He has been qualified as a coal mine electrician by a State that has a coal mine electrical qualification program approved by the Secretary; or,

(2) He has at least 1 year of experience in performing electrical work underground in a coal mine, in the surface work areas of an underground coal mine, in a surface coal mine, in a noncoal mine, in the mine equipment manufacturing industry, or in any other industry using or manufacturing similar equipment, and has satisfactorily completed a coal mine electrical training program approved by the Secretary; or,

(3) He has at least 1 year of experience, prior to the date of the application required by paragraph (c) of this section, in performing electrical work underground in a coal mine, in the surface work areas of an underground coal mine, in a surface coal mine, in a noncoal mine, in the mine equipment manufacturing industry, or in any other industry using or manufacturing similar equipment, and he attains a satisfactory grade on each of the series of five written tests approved by the Secretary and prescribed in paragraph (b) of this section.

(b) The series of five written tests approved by the Secretary shall include the following categories:

(1) Direct current theory and application;

(2) Alternating current theory and application;

(3) Electric equipment and circuits;

(4) Permissibility of electric equipment; and,

(5) Requirements of subparts F through K of this part 75.

(c) In order to take the series of five written tests approved by the Secretary, an individual shall apply to the District Manager and shall certify that he meets the requirements of paragraph (a)(3) of this section. The tests will be administered in the Coal Mine Safety and Health Districts at regular intervals, or as demand requires.

(d) A score of at least 80 percent of each of the five written tests will be deemed to be a satisfactory grade. Recognition shall be given to practical experience in that 1 percentage point shall be added to an individual's score in each test for each additional year of experience beyond the 1 year minimum requirement specified in paragraph (a)(3) of this section; however, in no case shall an individual be given more than 5 percentage points for such practical experience.

(e) An individual may, within 30 days from the date on which he received notification from the Administration of his test scores, repeat those on which he received an unsatisfactory score. If further retesting is necessary after this initial repetition, a minimum of 30 days from the date of receipt of notification of the initial retest scores shall elapse prior to such further retesting.

(f) An individual who has, prior to November 1, 1972, been qualified to perform electrical work specified in §§ 75.511 and 75.512 (other than work on energized surface high-voltage lines) shall continue to be qualified until June 30, 1973. To remain qualified after June 30, 1973, such individual shall meet the requirements of either paragraph (a) (1), (2), or (3) of this section.

(g) An individual qualified in accordance with this section shall, in order to retain qualification, certify annually

to the District Manager, that he has satisfactorily completed a coal mine electrical retraining program approved by the Secretary.

[37 FR 22376, Oct. 19, 1972, as amended at 44 FR 9380, Feb. 13, 1979; 47 FR 23641, May 28, 1982]

§ 75.154 Repair of energized surface high voltage lines; qualified person.

An individual is a qualified person within the meaning of § 75.705 for the purpose of repairing energized surface high voltage lines only if he has had at least 2 years experience in electrical maintenance, and at least 2 years experience in the repair of energized high voltage surface lines located on poles or structures.

§ 75.155 Qualified hoisting engineer; qualifications.

(a)(1) A person is a qualified hoisting engineer within the provisions of subpart O of this part, for the purpose of operating a steam-driven hoist in a coal mine, if he has at least 1 year experience as an engineer in a steam-driven hoisting plant and is qualified by the State in which the mine is located as a steam-hoisting engineer; or

(2) If a State has no program for qualifying persons as steam-hoisting engineers, the Secretary may qualify persons for this purpose if the operator of the coal mine in which such persons are employed, or the independent contractor, makes an application and a satisfactory showing that each such person has had 1 year experience in operating steam-driven hoists and has held the position of hoisting engineer for a periond of 6 months immediately preceding the application. A person's qualification is valid for as long as this person continues to satisfy the requirements necessary for qualification and is employed at the same coal mine or by the same independent contractor.

(b)(1) A person is a qualified hoisting engineer within the provisions of subpart O of this part, for the purpose of operating an electrically driven hoist in a coal mine, if he has at least 1 year experience operating a hoist plant in a mine or maintaining electric-hoist equipment in a mine and is qualified by the State in which the mine is located as an electric-hoisting engineer; or

(2) If a State has no program for qualifying persons as electric-hoisting engineers, the Secretary may qualify persons for this purpose if the operator of the coal mine in which such persons are employed, or the independent contractor, makes an application and a satisfactory showing that each such person has had 1 year experience in operating electric-driven hoists and has held the position of hoisting engineer for a period of 6 months immediately preceding the application. A person's qualification is valid for as long as this person continues to satisfy the requirements for qualification and is employed at the same coal mine or by the same independent contractor.

(c) Applications for Secretarial qualification should be submitted to the Health and Safety Activity, Mine Safety and Health Administration, Certification and Qualification Center, P.O. Box 25367, Denver Federal Center, Denver, Colo. 80225.

[35 FR 17894, Nov. 20, 1970, as amended at 43 FR 12320, Mar. 24, 1978; 54 FR 30515, July 20, 1989]

§ 75.156 AMS operator, qualifications.

(a) To be qualified as an AMS operator, a person shall be provided with task training on duties and responsibilities at each mine where an AMS operator is employed in accordance with the mine operator's approved Part 48 training plan.

(b) An AMS operator must be able to demonstrate to an authorized representative of the Secretary that he/she is qualified to perform in the assigned position.

[73 FR 80612, Dec. 31, 2008]

§ 75.159 Records of certified and qualified persons.

The operator of each coal mine shall maintain a list of all certified and qualified persons designated to perform duties under this part 75.

[35 FR 17890, Nov. 20, 1970, as amended at 60 FR 33723, June 29, 1995]

§ 75.160 Training programs.

[STATUTORY PROVISION]

Every operator of a coal mine shall provide a program, approved by the Secretary, of

training and retraining of both qualified and certified persons needed to carry out functions prescribed in the Act.

§ 75.161 Plans for training programs.

Each operator must submit to the district manager, of the Coal Mine Safety and Health District in which the mine is located, a program or plan setting forth what, when, how, and where the operator will train and retrain persons whose work assignments require that they be certified or qualified. The program must provide—

(a) For certified persons, annual training courses in first aid, principles of mine rescue, and the provisions of this part 75; and

(b) For qualified persons, annual courses in performance of the task which they perform as qualified persons.

[63 FR 53761, Oct. 6, 1998]

Subpart C—Roof Support

SOURCE: 53 FR 2375, Jan. 27, 1988, unless otherwise noted.

§ 75.200 Scope.

This subpart C sets forth requirements for controlling roof, face and ribs, including coal or rock bursts, in underground coal mines. Roof control systems installed prior to the effective date of this subpart are not affected so long as the support system continues to effectively control the roof, face and ribs.

§ 75.201 Definitions.

Automated temporary roof support (ATRS) system. A device to provide temporary roof support from a location where the equipment operator is protected from roof falls.

Pillar recovery. Any reduction in pillar size during retreat mining.

§ 75.202 Protection from falls of roof, face and ribs.

(a) The roof, face and ribs of areas where persons work or travel shall be supported or otherwise controlled to protect persons from hazards related to falls of the roof, face or ribs and coal or rock bursts.

(b) No person shall work or travel under unsupported roof unless in accordance with this subpart.

§ 75.203 Mining methods.

(a) The method of mining shall not expose any person to hazards caused by excessive widths of rooms, crosscuts and entries, or faulty pillar recovery methods. Pillar dimensions shall be compatible with effective control of the roof, face and ribs and coal or rock bursts.

(b) A sightline or other method of directional control shall be used to maintain the projected direction of mining in entries, rooms, crosscuts and pillar splits.

(c) A sidecut shall be started only from an area that is supported in accordance with the roof control plan.

(d) A working face shall not be mined through into an unsupported area of active workings, except when the unsupported area is inaccessible.

(e) Additional roof support shall be installed where—

(1) The width of the opening specified in the roof control plan is exceeded by more than 12 inches; and

(2) The distance over which the excessive width exists is more than 5 feet.

§ 75.204 Roof bolting.

(a) For roof bolts and accessories addressed in ASTM F432–95, ''Standard Specification for Roof and Rock Bolts and Accessories,'' the mine operator shall—

(1) Obtain a manufacturer's certification that the material was manufactured and tested in accordance with the specifications of ASTM F432–95; and

(2) Make this certification available to an authorized representative of the Secretary and to the representative of miners.

(b) Roof bolts and accessories not addressed in ASTM F432–95 may be used, provided that the use of such materials is approved by the District Manager based on—

(1) Demonstrations which show that the materials have successfully supported the roof in an area of a coal mine with similar strata, opening dimensions and roof stresses; or

(2) Tests which show the materials to be effective for supporting the roof in an area of the affected mine which has similar strata, opening dimensions and roof stresses as the area where the roof bolts are to be used. During the test process, access to the test area shall be limited to persons necessary to conduct the test.

(c)(1) A bearing plate shall be firmly installed with each roof bolt.

(2) Bearing plates used directly against the mine roof shall be at least 6 inches square or the equivalent, except that where the mine roof is firm and not susceptible to sloughing, bearing plates 5 inches square or the equivalent may be used.

(3) Bearing plates used with wood or metal materials shall be at least 4 inches square or the equivalent.

(4) Wooden materials that are used between a bearing plate and the mine roof in areas which will exist for three years or more shall be treated to minimize deterioration.

(d) When washers are used with roof bolts, the washers shall conform to the shape of the roof bolt head and bearing plate.

(e)(1) The diameter of finishing bits shall be within a tolerance of plus or minus 0.030 inch of the manufacturer's recommended hole diameter for the anchor used.

(2) When separate finishing bits are used, they shall be distinguishable from other bits.

(f) *Tensioned roof bolts.* (1) Roof bolts that provide support by creating a beam of laminated strata shall be at least 30 inches long. Roof bolts that provide support by suspending the roof from overlying stronger strata shall be long enough to anchor at least 12 inches into the stronger strata.

(2) Test holes, spaced at intervals specified in the roof control plan, shall be drilled to a depth of at least 12 inches above the anchorage horizon of mechanically anchored tensioned bolts being used. When a test hole indicates that bolts would not anchor in competent strata, corrective action shall be taken.

(3) The installed torque or tension ranges for roof bolts as specified in the roof control plan shall maintain the integrity of the support system and shall not exceed the yield point of the roof bolt nor anchorage capacity of the strata.

(4) In each roof bolting cycle, the actual torque or tension of the first tensioned roof bolt installed with each drill head shall be measured immediately after it is installed. Thereafter, for each drill head used, at least one roof bolt out of every four installed shall be measured for actual torque or tension. If the torque or tension of any of the roof bolts measured is not within the range specified in the roof control plan, corrective action shall be taken.

(5) In working places from which coal is produced during any portion of a 24-hour period, the actual torque or tension on at least one out of every ten previously installed mechanically anchored tensioned roof bolts shall be measured from the outby corner of the last open crosscut to the face in each advancing section. Corrective action shall be taken if the majority of the bolts measured—

(i) Do not maintain at least 70 percent of the minimum torque or tension specified in the roof control plan, 50 percent if the roof bolt plates bear against wood; or

(ii) Have exceeded the maximum specified torque or tension by 50 percent.

(6) The mine operator or a person designated by the operator shall certify by signature and date that measurements required by paragraph (f)(5) of this section have been made. This certification shall be maintained for at least one year and shall be made available to an authorized representative of the Secretary and representatives of the miners.

(7) Tensioned roof bolts installed in the roof support pattern shall not be used to anchor trailing cables or used for any other purpose that could affect the tension of the bolt. Hanging trailing cables, line brattice, telephone lines, or other similar devices which do not place sudden loads on the bolts are permitted.

(8) Angle compensating devices shall be used to compensate for the angle when tensioned roof bolts are installed at angles greater than 5 degrees from the perpendicular to the bearing plate.

(g) *Non-tensioned grouted roof bolts.* The first non-tensioned grouted roof bolt installed during each roof bolting cycle shall be tested during or immediately after the first row of bolts has been installed. If the bolt tested does not withstand at least 150 foot-pounds of torque without rotating in the hole, corrective action shall be taken.

[53 FR 2375, Jan. 27, 1988, as amended at 55 FR 4595, Feb. 8, 1990; 63 FR 20030, Apr. 22, 1998]

§ 75.205 Installation of roof support using mining machines with integral roof bolters.

When roof bolts are installed by a continuous mining machine with intregal roof bolting equipment:

(a) The distance between roof bolts shall not exceed 10 feet crosswise.

(b) Roof bolts to be installed 9 feet or more apart shall be installed with a wooden crossbar at least 3 inches thick and 8 inches wide, or material which provides equivalent support.

(c) Roof bolts to be installed more than 8 feet but less than 9 feet apart shall be installed with a wooden plank at least 2 inches thick and 8 inches wide, or material which provides equivalent support.

§ 75.206 Conventional roof support.

(a) Except in anthracite mines using non-mechanized mining systems, when conventional roof support materials are used as the only means of support—

(1) The width of any opening shall not exceed 20 feet;

(2) The spacing of roadway roof support shall not exceed 5 feet;

(3)(i) Supports shall be installed to within 5 feet of the uncut face;

(ii) When supports nearest the face must be removed to facilitate the operation of face equipment, equivalent temporary support shall be installed prior to removing the supports;

(4) Straight roadways shall not exceed 16 feet wide where full overhead support is used and 14 feet wide where only posts are used;

(5) Curved roadways shall not exceed 16 feet wide; and

(6) The roof at the entrance of all openings along travelways which are no longer needed for storing supplies or for travel of equipment shall be supported by extending the line of support across the opening.

(b) Conventional roof support materials shall meet the following specifications:

(1) The minimum diameter of cross-sectional area of wooden posts shall be as follows:

Post length (in inches)	Diameter of round posts (in inches)	Cross-sectional area of split posts (in square inches)
60 or less	4	13
Over 60 to 84	5	20
Over 84 to 108	6	28
Over 108 to 132	7	39
Over 132 to 156	8	50
Over 156 to 180	9	64
Over 180 to 204	10	79
Over 204 to 228	11	95
Over 228	12	113

(2) Wooden materials used for support shall have the following dimensions:

(i) Cap blocks and footings shall have flat sides and be at least 2 inches thick, 4 inches wide and 12 inches long.

(ii) Crossbars shall have a minimum cross-sectional area of 24 square inches and be at least 3 inches thick.

(iii) Planks shall be at least 6 inches wide and 1 inch thick.

(3) Cribbing materials shall have at least two parallel flat sides.

(c) A cluster of two or more posts that provide equivalent strength may be used to meet the requirements of paragraph (b)(1) of this section, except that no post shall have a diameter less than 4 inches or have a cross-sectional area less than 13 square inches.

(d) Materials other than wood used for support shall have support strength at least equivalent to wooden material meeting the applicable provisions of this section.

(e) Posts and jacks shall be tightly installed on solid footing.

(f) When posts are installed under roof susceptible to sloughing a cap block, plank, crossbar or materials that are equally effective shall be placed between the post and the roof.

(g) Blocks used for lagging between the roof and crossbars shall be spaced to distribute the load.

(h) Jacks used for roof support shall be used with at least 36 square inches of roof bearing surface.

[53 FR 2375, Jan. 27, 1988, as amended at 55 FR 14228, Apr. 16, 1990; 55 FR 20137, May 15, 1990]

§ 75.207 Pillar recovery.

Pillar recovery shall be conducted in the following manner, unless otherwise specified in the roof control plan:

(a) Full and partial pillar recovery shall not be conducted on the same pillar line, except where physical conditions such as unstable floor or roof, falls of roof, oil and gas well barriers or surface subsidence require that pillars be left in place.

(b) Before mining is started in a pillar split or lift—

(1) At least two rows of breaker posts or equivalent support shall be installed—

(i) As close to the initial intended breakline as practicable; and

(ii) Across each opening leading into an area where full or partial pillar extraction has been completed.

(2) A row of roadside-radius (turn) posts or equivalent support shall be installed leading into the split or lift.

(c) Before mining is started on a final stump—

(1) At least 2 rows of posts or equivalent support shall be installed on not more than 4-foot centers on each side of the roadway; and

(2) Only one open roadway, which shall not exceed 16 feet wide, shall lead from solid pillars to the final stump of a pillar. Where posts are used as the sole means of roof support, the width of the roadway shall not exceed 14 feet.

(d) During open-end pillar extraction, at least 2 rows of breaker posts or equivalent support shall be installed on not more than 4-foot centers. These supports shall be installed between the lift to be started and the area where pillars have been extracted. These supports shall be maintained to within 7 feet of the face and the width of the roadway shall not exceed 16 feet. Where posts are used as the sole means of roof support, the width of the roadway shall not exceed 14 feet.

§ 75.208 Warning devices.

Except during the installation of roof supports, the end of permanent roof support shall be posted with a readily visible warning, or a physical barrier shall be installed to impede travel beyond permanent support.

§ 75.209 Automated Temporary Roof Support (ATRS) systems.

(a) Except in anthracite mines and as specified in paragraphs (b) and (c) of this section, an ATRS system shall be used with roof bolting machines and continuous-mining machines with integral roof bolters operated in a working section. The requirements of this paragraph shall be met according to the following schedule:

(1) All new machines ordered after March 28, 1988.

(2) All existing machines operated in mining heights of 36 inches or more after March 28, 1989; and

(3) All existing machines operated in mining heights of 30 inches or more but less than 36 inches after March 28, 1990.

(b) After March 28, 1990 the use of ATRS systems with existing roof bolting machines and continuous-mining machines with integral roof bolters operated in a working section where the mining height is less than 30 inches shall be addressed in the roof control plan.

(c) Alternative means of temporary support shall be used, as specified in the roof control plan, when—

(1) Mining conditions or circumstances prevent the use of an ATRS system; or

(2) Temporary supports are installed in conjunction with an ATRS system.

(d) Persons shall work or travel between the support device of the ATRS system and another support, and the distance between the support device of the ATRS system and support to the left, right or beyond the ATRS system, shall not exceed 5 feet.

(e) Each ATRS system shall meet each of the following:

(1) The ATRS system shall elastically support a deadweight load measured in pounds of at least 450 times each square foot of roof intended to be supported, but in no case less than 11,250 pounds.

(2) The controls that position and set the ATRS system shall be—

(i) Operable from under permanently supported roof; or

(ii) Located in a compartment, which includes a deck, that provides the equipment operator with overhead and lateral protection, and has the structural capacity to elastically support a deadweight load of at least 18,000 pounds.

(3) All jacks affecting the capacity of the ATRS system and compartment shall have check valves or equivalent devices that will prevent rapid collapse in the event of a system failure.

(4) Except for the main tram controls, tram controls for positioning the equipment to set the ATRS system shall limit the speed of the equipment to a maximum of 80 feet-per-minute.

(f) The support capacity of each ATRS system and the structural capacity of each compartment shall be certified by a registered engineer as meeting the applicable requirements of paragraphs (e)(1) and (e)(2) of this section. The certifications shall be made available to an authorized representative of the Secretary and representative of the miners.

§ 75.210 Manual installation of temporary support.

(a) When manually installing temporary support, only persons engaged in installing the support shall proceed beyond permanent support.

(b) When manually installing temporary supports, the first temporary support shall be set no more than 5 feet from a permanent roof support and the rib. All temporary supports shall be set so that the person installing the supports remains between the temporary support being set and two other supports which shall be no more than 5 feet from the support being installed. Each temporary support shall be completely installed prior to installing the next temporary support.

(c) All temporary supports shall be placed on no more than 5-foot centers.

(d) Once temporary supports have been installed, work or travel beyond permanent roof support shall be done between temporary supports and the nearest permanent support or between other temporary supports.

§ 75.211 Roof testing and scaling.

(a) A visual examination of the roof, face and ribs shall be made immediately before any work is started in an area and thereafter as conditions warrant.

(b) Where the mining height permits and the visual examination does not disclose a hazardous condition, sound and vibration roof tests, or other equivalent tests, shall be made where supports are to be installed. When sound and vibration tests are made, they shall be conducted—

(1) After the ATRS system is set against the roof and before other support is installed; or

(2) Prior to manually installing a roof support. This test shall begin under supported roof and progress no further than the location where the next support is to be installed.

(c) When a hazardous roof, face, or rib condition is detected, the condition shall be corrected before there is any other work or travel in the affected area. If the affected area is left unattended, each entrance to the area shall be posted with a readily visible warning, or a physical barrier shall be installed to impede travel into the area.

(d) A bar for taking down loose material shall be available in the working place or on all face equipment except haulage equipment. Bars provided for taking down loose material shall be of a length and design that will allow the removal of loose material from a position that will not expose the person performing this work to injury from falling material.

§ 75.212 Rehabilitation of areas with unsupported roof.

(a) Before rehabilitating each area where a roof fall has occurred or the roof has been removed by mining machines or by blasting—

(1) The mine operator shall establish the clean up and support procedures that will be followed;

(2) All persons assigned to perform rehabilitation work shall be instructed in the clean-up and support procedures; and

(3) Ineffective, damaged or missing roof support at the edge of the area to be rehabilitated shall be replaced or other equivalent support installed.

(b) All persons who perform rehabilitation work shall be experienced in this work or they shall be supervised by a person experienced in rehabilitation work who is designated by the mine operator.

(c) Where work is not being performed to rehabilitate an area in active workings where a roof fall has occurred or the roof has been removed by mining machines or by blasting, each entrance to the area shall be supported by at least one row of posts on not more than 5-foot centers, or equally effective support.

§ 75.213 Roof support removal.

(a)(1) All persons who perform the work of removing permanent roof supports shall be supervised by a management person experienced in removing roof supports.

(2) Only persons with at least one year of underground mining experience shall perform permanent roof support removal work.

(b) Prior to the removal of permanent roof supports, the person supervising roof support removal in accordance with paragraph (a)(1) of this section shall examine the roof conditions in the area where the supports are to be removed and designate each support to be removed.

(c)(1) Except as provided in paragraph (g) of this section, prior to the removal of permanent supports, a row of temporary supports on no more than 5-foot centers or equivalent support shall be installed across the opening within 4 feet of the supports being removed. Additional supports shall be installed where necessary to assure safe removal.

(2) Prior to the removal of roof bolts, temporary support shall be installed as close as practicable to each roof bolt being removed.

(d) Temporary supports installed in accordance with this section shall not be removed unless—

(1) Removal is done by persons who are in a remote location under supported roof; and

(2) At least two rows of temporary supports, set across the opening on no more than 5-foot centers, are maintained between the miners and the unsupported area.

(e) Each entrance to an area where supports have been removed shall be posted with a readily visible warning or a physical barrier shall be installed to impede travel into the area.

(f) Except as provided in paragraph (g) of this section, permanent support shall not be removed where—

(1) Roof bolt torque or tension measurements or the condition of conventional support indicate excessive loading;

(2) Roof fractures are present;

(3) There is any other indication that the roof is structurally weak; or

(4) Pillar recovery has been conducted.

(g) Permanent supports may be removed provided that:

(1) Removal is done by persons who are in a remote location under supported roof; and

(2) At least two rows of temporary supports, set across the opening on no more than 5-foot centers, are maintained between the miners and the unsupported area.

(h) The provisions of this section do not apply to removal of conventional supports for starting crosscuts and pillar splits or lifts except that prior to the removal of these supports an examination of the roof conditions shall be made.

[55 FR 4595, Feb. 8, 1990]

§ 75.214 Supplemental support materials, equipment and tools.

(a) A supply of supplementary roof support materials and the tools and equipment necessary to install the materials shall be available at a readily accessible location on each working section or within four crosscuts of each working section.

(b) The quantity of support materials and tools and equipment maintained available in accordance with this section shall be sufficient to support the roof if adverse roof conditions are encountered, or in the event of an accident involving a fall.

§ 75.215 Longwall mining systems.

For each longwall mining section, the roof control plan shall specify—

(a) The methods that will be used to maintain a safe travelway out of the

section through the tailgate side of the longwall; and

(b) The procedures that will be followed if a ground failure prevents travel out of the section through the tailgate side of the longwall.

§ 75.220 Roof control plan.

(a)(1) Each mine operator shall develop and follow a roof control plan, approved by the District Manager, that is suitable to the prevailing geological conditions, and the mining system to be used at the mine. Additional measures shall be taken to protect persons if unusual hazards are encountered.

(2) The proposed roof control plan and any revisions to the plan shall be submitted, in writing, to the District Manager. When revisions to a roof control plan are proposed, only the revised pages need to be submitted unless otherwise specified by the District Manager.

(b)(1) The mine operator will be notified in writing of the approval or denial of approval of a proposed roof control plan or proposed revision.

(2) When approval of a proposed plan or revision is denied, the deficiencies of the plan or revision and recommended changes will be specified and the mine operator will be afforded an opportunity to discuss the deficiencies and changes with the District Manager.

(3) Before new support materials, devices or systems other than roof bolts and accessories, are used as the only means of roof support, the District Manager may require that their effectiveness be demonstrated by experimental installations.

(c) No proposed roof control plan or revision to a roof control plan shall be implemented before it is approved.

(d) Before implementing an approved revision to a roof control plan, all persons who are affected by the revision shall be instructed in its provisions.

(e) The approved roof control plan and any revisions shall be available to the miners and representative of miners at the mine.

[53 FR 2375, Jan. 27, 1988; 53 FR 11395, Apr. 6, 1988 as amended at 60 FR 33723, June 29, 1995; 71 FR 16668, Apr. 3, 2006]

§ 75.221 Roof control plan information.

(a) The following information shall be included in each roof control plan:

(1) The name and address of the company.

(2) The name, address, mine identification number and location of the mine.

(3) The name and title of the company official responsible for the plan.

(4) A typical columnar section of the mine strata which shall—

(i) Show the name and the thickness of the coalbed to be mined and any persistent partings;

(ii) Identify the type and show the thickness of each stratum up to and including the main roof above the coalbed and for distance of at least 10 feet below the coalbed; and

(iii) Indicate the maximum cover over the area to be mined.

(5) A description and drawings of the sequence of installation and spacing of supports for each method of mining used.

(6) When an ATRS system is used, the maximum distance that an ATRS system is to be set beyond the last row of permanent support.

(7) When tunnel liners or arches are to be used for roof support, specifications and installation procedures for the liners or arches.

(8) Drawings indicating the planned width of openings, size of pillars, method of pillar recovery, and the sequence of mining pillars.

(9) A list of all support materials required to be used in the roof, face and rib control system, including, if roof bolts are to be installed—

(i) The length, diameter, grade and type of anchorage unit to be used;

(ii) The drill hole size to be used; and

(iii) The installed torque or tension range for tensioned roof bolts.

(10) When mechanically anchored tensioned roof bolts are used, the intervals at which test holes will be drilled.

(11) A description of the method of protecting persons—

(i) From falling material at drift openings; and

(ii) When mining approaches within 150 feet of an outcrop.

(12) A description of the roof and rib support necessary for the refuge alternatives.

(b) Each drawing submitted with a roof control plan shall contain a legend explaining all symbols used and shall specify the scale of the drawing which shall not be less than 5 feet to the inch or more than 20 feet to the inch.

(c) All roof control plan information, including drawings, shall be submitted on 8½ by 11 inch paper, or paper folded to this size.

[53 FR 2375, Jan. 27, 1988, as amended at 60 FR 33723, June 29, 1995; 73 FR 80697, Dec. 31, 2008]

§ 75.222 Roof control plan-approval criteria.

(a) This section sets forth the criteria that shall be considered on a mine-by-mine basis in the formulation and approval of roof control plans and revisions. Additional measures may be required in plans by the District Manager. Roof control plans that do not conform to the applicable criteria in this section may be approved by the District Manager, provided that effective control of the roof, face and ribs can be maintained.

(b) *Roof Bolting.* (1) Roof bolts should be installed on centers not exceeding 5 feet lengthwise and crosswise, except as specified in § 75.205.

(2) When tensioned roof bolts are used as a means of roof support, the torque or tension range should be capable of supporting roof bolt loads of at least 50 percent of either the yield point of the bolt or anchorage capacity of the strata, whichever is less.

(3) Any opening that is more than 20 feet wide should be supported by a combination of roof bolts and conventional supports.

(4) In any opening more than 20 feet wide—

(i) Posts should be installed to limit each roadway to 16 feet wide where straight and 18 feet wide where curved; and

(ii) A row of posts should be set for each 5 feet of space between the roadway posts and the ribs.

(5) Openings should not be more than 30 feet wide.

(c) *Installation of roof support using mining machines with integral roof bolters.* (1) Before an intersection or pillar split is started, roof bolts should be installed on at least 5-foot centers where the work is performed.

(2) Where the roof is supported by only two roof bolts crosswise, openings should not be more than 16 feet wide.

(d) *Pillar recovery.* (1) During development, any dimension of a pillar should be at least 20 feet.

(2) Pillar splits and lifts should not be more than 20 feet wide.

(3) Breaker posts should be installed on not more than 4-foot centers.

(4) Roadside-radius (turn) posts, or equivalent support, should be installed on not more than 4-foot centers leading into each pillar split or lift.

(5) Before full pillar recovery is started in areas where roof bolts are used as the only means of roof support and openings are more than 16 feet wide, at least one row of posts should be installed to limit the roadway width to 16 feet. These posts should be—

(i) Extended from the entrance to the split through the intersection outby the pillar in which the split or lift is being made; and

(ii) Spaced on not more than 5-foot centers.

(e) *Unsupported openings at intersections.* Openings that create an intersection should be permanently supported or at least one row of temporary supports should be installed on not more than 5-foot centers across the opening before any other work or travel in the intersection.

(f) *ATRS systems in working sections where the mining height is below 30 inches.* In working sections where the mining height is below 30 inches, an ATRS system should be used to the extent practicable during the installation of roof bolts with roof bolting machines and continuous-mining machines with integral roof bolters.

(g) *Longwall mining systems.* (1) Systematic supplemental support should be installed throughout—

(i) The tailgate entry of the first longwall panel prior to any mining; and

(ii) In the proposed tailgate entry of each subsequent panel in advance of the frontal abutment stresses of the panel being mined.

(2) When a ground failure prevents travel out of the section through the

tailgate side of the longwall section, the roof control plan should address—

(i) Notification of miners that the travelway is blocked;

(ii) Re-instruction of miners regarding escapeways and escape procedures in the event of an emergency;

(iii) Re-instruction of miners on the availability and use of self-contained self-rescue devices;

(iv) Monitoring and evaluation of the air entering the longwall section;

(v) Location and effectiveness of the two-way communication systems; and

(vi) A means of transportation from the section to the main line.

(3) The plan provisions addressed by paragraph (g)(2) of this section should remain in effect until a travelway is re-established on the tailgate side of a longwall section.

§ 75.223 Evaluation and revision of roof control plan.

(a) Revisions of the roof control plan shall be proposed by the operator—

(1) When conditions indicate that the plan is not suitable for controlling the roof, face, ribs, or coal or rock bursts; or

(2) When accident and injury experience at the mine indicates the plan is inadequate. The accident and injury experience at each mine shall be reviewed at least every six months.

(b) Each unplanned roof fall and rib fall and coal or rock burst that occurs in the active workings shall be plotted on a mine map if it—

(1) Is above the anchorage zone where roof bolts are used;

(2) Impairs ventilation;

(3) Impedes passage of persons;

(4) Causes miners to be withdrawn from the area affected; or

(5) Disrupts regular mining activities for more than one hour.

(c) The mine map on which roof falls are plotted shall be available at the mine site for inspection by authorized representatives of the Secretary and representatives of miners at the mine.

(d) The roof control plan for each mine shall be reviewed every six months by an authorized representative of the Secretary. This review shall take into consideration any falls of the roof, face and ribs and the adequacy of the support systems used at the time.

[53 FR 2375, Jan. 27, 1988; 60 FR 33723, June 29, 1995]

Subpart D—Ventilation

AUTHORITY: 30 U.S.C. 811, 863.

SOURCE: 61 FR 9829, Mar. 11, 1996, unless otherwise noted.

§ 75.300 Scope.

This subpart sets requirements for underground coal mine ventilation.

§ 75.301 Definitions.

In addition to the applicable definitions in § 75.2, the following definitions apply in this subpart.

Air course. An entry or a set of entries separated from other entries by stoppings, overcasts, other ventilation control devices, or by solid blocks of coal or rock so that any mixing of air currents between each is limited to leakage.

AMS operator. The person(s), designated by the mine operator, who is located on the surface of the mine and monitors the malfunction, alert, and alarm signals of the AMS and notifies appropriate personnel of these signals.

Appropriate personnel. The person or persons designated by the operator to perform specific tasks in response to AMS signals. Appropriate personnel include the responsible person(s) required by § 75.1501 when an emergency evacuation is necessary.

Atmospheric Monitoring System (AMS). A network consisting of hardware and software meeting the requirements of §§ 75.351 and 75.1103–2 and capable of: measuring atmospheric parameters; transmitting the measurements to a designated surface location; providing alert and alarm signals; processing and cataloging atmospheric data; and, providing reports. Early-warning fire detection systems using newer technology that provides equal or greater protection, as determined by the Secretary, will be considered atmospheric monitoring systems for the purposes of this subpart.

Belt air course. The entry in which a belt is located and any adjacent entry(ies) not separated from the belt

entry by permanent ventilation controls, including any entries in series with the belt entry, terminating at a return regulator, a section loading point, or the surface.

Carbon monoxide ambient level. The average concentration in parts per million (ppm) of carbon monoxide detected in an air course containing carbon monoxide sensors. This average concentration is representative of the composition of the mine atmosphere over a period of mining activity during non-fire conditions. Separate ambient levels may be established for different areas of the mine.

Incombustible. Incapable of being burned.

Intake air. Air that has not yet ventilated the last working place on any split of any working section, or any worked-out area, whether pillared or nonpillared.

Intrinsically safe. Incapable of releasing enough electrical or thermal energy under normal or abnormal conditions to cause ignition of a flammable mixture of methane or natural gas and air of the most easily ignitable composition.

Noncombustible structure or area. Describes a structure or area that will continue to provide protection against flame spread for at least 1 hour when subjected to a fire test incorporating an ASTM E119–88 time/temperature heat input, or equivalent. The publication ASTM E119–88, ''Standard Test Methods for Fire Tests of Building Construction and Materials'' is incorporated by reference and may be inspected at any MSHA Coal Mine Safety and Health district office, or at MSHA's Office of Standards, 1100 Wilson Blvd., Room 2352, Arlington, Virginia 22209–3939, or at the National Archives and Records Administration (NARA). For information on the availability of this material at NARA, call 202–741–6030, or go to: *http://www.archives.gov/federal_register/code_of_federal_regulations/ibr_locations.html*. In addition, copies of the document can be purchased from the American Society for Testing Materials (ASTM), 1916 Race Street, Philadelphia, Pennsylvania 19103. This incorporation by reference was approved by the Director of the Federal Register in accordance with 5 U.S.C. 552(a) and 1 CFR part 51.

Noncombustible material. Describes a material which when used to construct a ventilation control results in a control that will continue to serve its intended function for 1 hour when subjected to a fire test incorporating an ASTM E119–88 time/temperature heat input, or equivalent. The publication ASTM E119–88, ''Standard Test Methods for Fire Tests of Building Construction and Materials'' is incorporated by reference and may be inspected at any Coal Mine Health and Safety District and Subdistrict Office, or at MSHA's Office of Standards, Regulations, and Variances, 1100 Wilson Blvd., Room 2352, Arlington, Virginia 22209–3939, or at the National Archives and Records Administration (NARA). For information on the availability of this material at NARA, call 202–741–6030, or go to: *http://www.archives.gov/federal_register/code_of_federal_regulations/ibr_locations.html*. In addition, copies of the document can be purchased from the American Society for Testing Materials (ASTM), 100 Barr Harbor Drive, PO Box C700, West Conshohocken, PA 19428–2959; *http://www.astm.org*. This incorporation by reference was approved by the Director of the Federal Register in accordance with 5 U.S.C. 552(a) and 1 CFR part 51.

Point feeding. The process of providing additional intake air to the belt air course from another intake air course through a regulator.

Return air. Air that has ventilated the last working place on any split of any working section or any worked-out area whether pillared or nonpillared. If air mixes with air that has ventilated the last working place on any split of any working section or any worked-out area, whether pillared or nonpillared, it is considered return air. For the purposes of § 75.507–1, air that has been used to ventilate any working place in a coal producing section or pillared area, or air that has been used to ventilate any working face if such air is directed away from the immediate return is return air. Notwithstanding the definition of intake air, for the purpose of ventilation of structures, areas or installations that are required by this

subpart D to be ventilated to return air courses, and for ventilation of seals, other air courses may be designated as return air courses by the operator only when the air in these air courses will not be used to ventilate working places or other locations, structures, installations or areas required to be ventilated with intake air.

Worked-out area. An area where mining has been completed, whether pillared or nonpillared, excluding developing entries, return air courses, and intake air courses.

[61 FR 9829, Mar. 11, 1996; 61 FR 29288, June 10, 1996, as amended at 67 FR 38386, June 4, 2002; 69 FR 17526, Apr. 2, 2004; 71 FR 16668, Apr. 3, 2006]

§ 75.302 Main mine fans.

Each coal mine shall be ventilated by one or more main mine fans. Booster fans shall not be installed underground to assist main mine fans except in anthracite mines. In anthracite mines, booster fans installed in the main air current or a split of the main air current may be used provided their use is approved in the ventilation plan.

§ 75.310 Installation of main mine fans.

(a) Each main mine fan shall be—

(1) Installed on the surface in an incombustible housing;

(2) Connected to the mine opening with incombustible air ducts;

(3) Equipped with an automatic device that gives a signal at the mine when the fan either slows or stops. A responsible person designated by the operator shall always be at a surface location at the mine where the signal can be seen or heard while anyone is underground. This person shall be provided with two-way communication with the working sections and work stations where persons are routinely assigned to work for the majority of a shift;

(4) Equipped with a pressure recording device or system. Mines permitted to shut down main mine fans under § 75.311 and which do not have a pressure recording device installed on main mine fans shall have until June 10, 1997 to install a pressure recording device or system on all main mine fans. If a device or system other than a circular pressure recorder is used to monitor main mine fan pressure, the monitoring device or system shall provide a continuous graph or continuous chart of the pressure as a function of time. At not more than 7-day intervals, a hard copy of the continuous graph or chart shall be generated or the record of the fan pressure shall be stored electronically. When records of fan pressure are stored electronically, the system used to store these records shall be secure and not susceptible to alteration and shall be capable of storing the required data. Records of the fan pressure shall be retained at a surface location at the mine for at least 1 year and be made available for inspection by authorized representatives of the Secretary and the representative of miners;

(5) Protected by one or more weak walls or explosion doors, or a combination of weak walls and explosion doors, located in direct line with possible explosive forces;

(6) Except as provided under paragraph (e) of this section, offset by at least 15 feet from the nearest side of the mine opening unless an alternative method of protecting the fan and its associated components is approved in the ventilation plan.

(b)(1) If an electric motor is used to drive a main mine fan, the motor shall operate from a power circuit independent of all mine power circuits.

(2) If an internal combustion engine is used to drive a main mine fan—

(i) The fuel supply shall be protected against fires and explosions;

(ii) The engine shall be installed in an incombustible housing and be equipped with a remote shut-down device;

(iii) The engine and the engine exhaust system shall be located out of direct line of the air current exhausting from the mine; and

(iv) The engine exhaust shall be vented to the atmosphere so that the exhaust gases do not contaminate the mine intake air current or any enclosure.

(c) If a main mine fan monitoring system is used under § 75.312, the system shall—

(1) Record, as described in paragraph (a)(4) the mine ventilating pressure;

(2) Monitor bearing temperature, revolutions per minute, vibration, electric voltage, and amperage;

(3) Provide a printout of the monitored parameters, including the mine ventilating pressure within a reasonable period, not to exceed the end of the next scheduled shift during which miners are underground; and

(4) Be equipped with an automatic device that signals when—

(i) An electrical or mechanical deficiency exists in the monitoring system; or

(ii) A sudden increase or loss in mine ventilating pressure occurs.

(5) Provide monitoring, records, printouts, and signals required by paragraphs (c)(1) through (c)(4) at a surface location at the mine where a responsible person designated by the operator is always on duty and where signals from the monitoring system can be seen or heard while anyone is underground. This person shall be provided with two-way communication with the working sections and work stations where persons are routinely assigned to work for the majority of a shift.

(d) Weak walls and explosion doors shall have cross-sectional areas at least equal to that of the entry through which the pressure from an explosion underground would be relieved. A weak wall and explosion door combination shall have a total cross-sectional area at least equal to that of the entry through which the pressure from an explosion underground would be relieved.

(e) If a mine fan is installed in line with an entry, a slope, or a shaft—

(1) The cross-sectional area of the pressure relief entry shall be at least equal to that of the fan entry;

(2) The fan entry shall be developed out of direct line with possible explosive forces;

(3) The coal or other solid material between the pressure relief entry and the fan entry shall be at least 2,500 square feet; and

(4) The surface opening of the pressure relief entry shall be not less than 15 feet nor more than 100 feet from the surface opening of the fan entry and from the underground intersection of the fan entry and pressure relief entry.

(f) In mines ventilated by multiple main mine fans, incombustible doors shall be installed so that if any main mine fan stops and air reversals through the fan are possible, the doors on the affected fan automatically close.

[61 FR 9829, Mar. 11, 1996, as amended at 61 FR 20877, May 8, 1996]

§ 75.311 Main mine fan operation.

(a) Main mine fans shall be continuously operated, except as otherwise approved in the ventilation plan, or when intentionally stopped for testing of automatic closing doors and automatic fan signal devices, maintenance or adjustment of the fan, or to perform maintenance or repair work underground that cannot otherwise be made while the fan is operating.

(b) Except as provided in paragraph (c) of this section, when a main mine fan is intentionally stopped and the ventilating quantity provided by the fan is not maintained by a back-up fan system—

(1) Only persons necessary to evaluate the effect of the fan stoppage or restart, or to perform maintenance or repair work that cannot otherwise be made while the fan is operating, shall be permitted underground;

(2) Mechanized equipment shall be shut off before stopping the fan; and

(3) Electric power circuits entering underground areas of the mine shall be deenergized.

(c) When a back-up fan system is used that does not provide the ventilating quantity provided by the main mine fan, persons may be permitted in the mine and electric power circuits may be energized as specified in the approved ventilation plan.

(d) If an unusual variance in the mine ventilation pressure is observed, or if an electrical or mechanical deficiency of a main mine fan is detected, the mine foreman or equivalent mine official, or in the absence of the mine foreman or equivalent mine official, a designated certified person acting for the mine foreman or equivalent mine official shall be notified immediately, and appropriate action or repairs shall be instituted promptly.

(e) While persons are underground, a responsible person designated by the operator shall always be at a surface

location where each main mine fan signal can be seen or heard.

(f) The area within 100 feet of main mine fans and intake air openings shall be kept free of combustible material, unless alternative precautions necessary to provide protection from fire or other products of combustion are approved in the ventilation plan.

(g) If multiple mine fans are used, the mine ventilation system shall be designed and maintained to eliminate areas without air movement.

(h) Any atmospheric monitoring system operated during fan stoppages shall be intrinsically safe.

§ 75.312 Main mine fan examinations and records.

(a) To assure electrical and mechanical reliability of main mine fans, each main mine fan and its associated components, including devices for measuring or recording mine ventilation pressure, shall be examined for proper operation by a trained person designated by the operator. Examinations of main mine fans shall be made at least once each day that the fan operates, unless a fan monitoring system is used. No examination is required on any day when no one, including certified persons, goes underground, except that an examination shall be completed prior to anyone entering the mine.

(b)(1) If a main mine fan monitoring system is used, a trained person designated by the operator shall—

(i) At least once each day review the data provided by the fan monitoring system to assure that the fan and the fan monitoring system are operating properly. No review is required on any day when no one, including certified persons, goes underground, except that a review of the data shall be performed prior to anyone entering the underground portion of the mine. Data reviewed should include the fan pressure, bearing temperature, revolutions per minute, vibration, electric voltage, and amperage; and

(ii) At least every 7 days—

(A) Test the monitoring system for proper operation; and

(B) Examine each main mine fan and its associated components to assure electrical and mechanical reliability of main mine fans.

(2) If the monitoring system malfunctions, the malfunction shall be corrected, or paragraph (a) of this section shall apply.

(c) At least every 31 days, the automatic fan signal device for each main mine fan shall be tested by stopping the fan. Only persons necessary to evaluate the effect of the fan stoppage or restart, or to perform maintenance or repair work that cannot otherwise be made while the fan is operating, shall be permitted underground. Notwithstanding the requirement of § 75.311(b)(3), underground power may remain energized during this test provided no one, including persons identified in § 75.311(b)(1), is underground. If the fan is not restarted within 15 minutes, underground power shall be deenergized and no one shall enter any underground area of the mine until the fan is restarted and an examination of the mine is conducted as described in § 75.360 (b) through (e) and the mine has been determined to be safe.

(d) At least every 31 days, the automatic closing doors in multiple main mine fan systems shall be tested by stopping the fan. Only persons necessary to evaluate the effect of the fan stoppage or restart, or to perform maintenance or repair work that cannot otherwise be made while the fan is operating, shall be permitted underground. Notwithstanding the provisions of § 75.311, underground power may remain energized during this test provided no one, including persons identified in § 75.311(b)(1), is underground. If the fan is not restarted within 15 minutes, underground power shall be deenergized and no one shall enter any underground area of the mine, until the fan is restarted and an examination of the mine is conducted as described in § 75.360 (b) through (e) and the mine has been determined to be safe.

(e) Circular main mine fan pressure recording charts shall be changed before the beginning of a second revolution.

(f)(1) *Certification.* Persons making main mine fan examinations shall certify by initials and date at the fan or

another location specified by the operator that the examinations were made. Each certification shall identify the main mine fan examined.

(2) Persons reviewing data produced by a main mine fan monitoring system shall certify by initials and date on a printed copy of the data from the system that the review was completed. In lieu of certification on a copy of the data, the person reviewing the data may certify electronically that the review was completed. Electronic certification shall be by handwritten initials and date in a computer system so as to be secure and not susceptible to alteration.

(g)(1) *Recordkeeping*. By the end of the shift on which the examination is made, persons making main mine fan examinations shall record all uncorrected defects that may affect the operation of the fan that are not corrected by the end of that shift. Records shall be maintained in a secure book that is not susceptible to alteration or electronically in a computer system so as to be secure and not susceptible to alteration.

(2) When a fan monitoring system is used in lieu of the daily fan examination—

(i) The certified copies of data produced by fan monitoring systems shall be maintained separate from other computer-generated reports or data; and

(ii) A record shall be made of any fan monitoring system malfunctions, electrical or mechanical deficiencies in the monitoring system and any sudden increase or loss in mine ventilating pressure. The record shall be made by the end of the shift on which the review of the data is completed and shall be maintained in a secure book that is not susceptible to alteration or electronically in a computer system so as to be secure and not susceptible to alteration.

(3) By the end of the shift on which the monthly test of the automatic fan signal device or the automatic closing doors is completed, persons making these tests shall record the results of the tests. Records shall be maintained in a secure book that is not susceptible to alteration or electronically in a computer system so as to be secure and not susceptible to alteration.

(h) *Retention period*. Records, including records of mine fan pressure and the certified copies of data produced by fan monitoring systems, shall be retained at a surface location at the mine for at least 1 year and shall be made available for inspection by authorized representatives of the Secretary and the representative of miners.

§ 75.313 Main mine fan stoppage with persons underground.

(a) If a main mine fan stops while anyone is underground and the ventilating quantity provided by the fan is not maintained by a back-up fan system—

(1) Electrically powered equipment in each working section shall be deenergized;

(2) Other mechanized equipment in each working section shall be shut off; and

(3) Everyone shall be withdrawn from the working sections and areas where mechanized mining equipment is being installed or removed.

(b) If ventilation is restored within 15 minutes after a main mine fan stops, certified persons shall examine for methane in the working places and in other areas where methane is likely to accumulate before work is resumed and before equipment is energized or restarted in these areas.

(c) If ventilation is not restored within 15 minutes after a main mine fan stops—

(1) Everyone shall be withdrawn from the mine;

(2) Underground electric power circuits shall be deenergized. However, circuits necessary to withdraw persons from the mine need not be deenergized if located in areas or haulageways where methane is not likely to migrate to or accumulate. These circuits shall be deenergized as persons are withdrawn; and

(3) Mechanized equipment not located on working sections shall be shut off. However, mechanized equipment necessary to withdraw persons from the mine need not be shut off if located in areas where methane is not likely to migrate to or accumulate.

(d)(1) When ventilation is restored—

(i) No one other than designated certified examiners shall enter any underground area of the mine until an examination is conducted as described in § 75.360(b) through (e) and the area has been determined to be safe. Designated certified examiners shall enter the underground area of the mine from which miners have been withdrawn only after the fan has operated for at least 15 minutes unless a longer period of time is specified in the approved ventilation plan.

(ii) Underground power circuits shall not be energized and nonpermissible mechanized equipment shall not be started or operated in an area until an examination is conducted as described in § 75.360(b) through (e) and the area has been determined to be safe, except that designated certified examiners may use nonpermissible transportation equipment in intake airways to facilitate the making of the required examination.

(2) If ventilation is restored to the mine before miners reach the surface, the miners may return to underground working areas only after an examination of the areas is made by a certified person and the areas are determined to be safe.

(e) Any atmospheric monitoring system operated during fan stoppages shall be intrinsically safe.

(f) Any electrical refuge alternative components exposed to the mine atmosphere shall be approved as intrinsically safe for use during fan stoppages. Any electrical refuge alternative components located inside the refuge alternative shall be either approved as intrinsically safe or approved as permissible for use during fan stoppages.

[61 FR 9829, Mar. 11, 1996, as amended at 73 FR 80697, Dec. 31, 2008]

§ 75.320 Air quality detectors and measurement devices.

(a) Tests for methane shall be made by a qualified person with MSHA approved detectors that are maintained in permissible and proper operating condition and calibrated with a known methane-air mixture at least once every 31 days.

(b) Tests for oxygen deficiency shall be made by a qualified person with MSHA approved oxygen detectors that are maintained in permissible and proper operating condition and that can detect 19.5 percent oxygen with an accuracy of ±0.5 percent. The oxygen detectors shall be calibrated at the start of each shift that the detectors will be used.

(c) Handheld devices that contain electrical components and that are used for measuring air velocity, carbon monoxide, oxides of nitrogen, and other gases shall be approved and maintained in permissible and proper operating condition.

(d) An oxygen detector approved by MSHA shall be used to make tests for oxygen deficiency required by the regulations in this part. Permissible flame safety lamps may only be used as a supplementary testing device.

(e) Maintenance of instruments required by paragraphs (a) through (d) of this section shall be done by persons trained in such maintenance.

§ 75.321 Air quality.

(a)(1) The air in areas where persons work or travel, except as specified in paragraph (a)(2) of this section, shall contain at least 19.5 percent oxygen and not more than 0.5 percent carbon dioxide, and the volume and velocity of the air current in these areas shall be sufficient to dilute, render harmless, and carry away flammable, explosive, noxious, and harmful gases, dusts, smoke, and fumes.

(2) The air in areas of bleeder entries and worked-out areas where persons work or travel shall contain at least 19.5 percent oxygen, and carbon dioxide levels shall not exceed 0.5 percent time weighted average and 3.0 percent short term exposure limit.

(b) Notwithstanding the provisions of § 75.322, for the purpose of preventing explosions from gases other than methane, the following gases shall not be permitted to accumulate in excess of the concentrations listed below:

(1) Carbon monoxide (CO)—2.5 percent

(2) Hydrogen (H_2)—.80 percent

(3) Hydrogen sulfide (H_2 S)—.80 percent

(4) Acetylene (C_2 H_2)—.40 percent

(5) Propane (C_3 H_8)—.40 percent

(6) MAPP (methyl-acetylene-propylene-propodiene)—.30 percent

§ 75.322 Harmful quantities of noxious gases.

Concentrations of noxious or poisonous gases, other than carbon dioxide, shall not exceed the threshold limit values (TLV) as specified and applied by the American Conference of Governmental Industrial Hygienists in ''Threshold Limit Values for Substance in Workroom Air'' (1972). Detectors or laboratory analysis of mine air samples shall be used to determine the concentrations of harmful, noxious, or poisonous gases. This incorporation by reference has been approved by the Director of the Federal Register in accordance with 5 U.S.C. 552(a) and 1 CFR part 51. Copies are available from the Mine Safety and Health Administration, Department of Labor, 1100 Wilson Blvd., Room 2424, Arlington, Virginia 22209–3939 and at every MSHA Coal Mine Safety and Health district office. The material is available for examination at the National Archives and Records Administration (NARA). For information on the availability of this material at NARA, call 202–741–6030, or go to: *http://www.archives.gov/federal_register/code_of_federal_regulations/ibr_locations.html.*

[61 FR 26442, May 28, 1996, as amended at 67 FR 38386, June 4, 2002; 71 FR 16668, Apr. 3, 2006]

§ 75.323 Actions for excessive methane.

(a) *Location of tests.* Tests for methane concentrations under this section shall be made at least 12 inches from the roof, face, ribs, and floor.

(b) *Working places and intake air courses.* (1) When 1.0 percent or more methane is present in a working place or an intake air course, including an air course in which a belt conveyor is located, or in an area where mechanized mining equipment is being installed or removed—

(i) Except intrinsically safe atmospheric monitoring systems (AMS), electrically powered equipment in the affected area shall be deenergized, and other mechanized equipment shall be shut off;

(ii) Changes or adjustments shall be made at once to the ventilation system to reduce the concentration of methane to less than 1.0 percent; and

(iii) No other work shall be permitted in the affected area until the methane concentration is less than 1.0 percent.

(2) When 1.5 percent or more methane is present in a working place or an intake air course, including an air course in which a belt conveyor is located, or in an area where mechanized mining equipment is being installed or removed—

(i) Everyone except those persons referred to in § 104(c) of the Act shall be withdrawn from the affected area; and

(ii) Except for intrinsically safe AMS, electrically powered equipment in the affected area shall be disconnected at the power source.

(c) *Return air split.* (1) When 1.0 percent or more methane is present in a return air split between the last working place on a working section and where that split of air meets another split of air, or the location at which the split is used to ventilate seals or worked-out areas changes or adjustments shall be made at once to the ventilation system to reduce the concentration of methane in the return air to less than 1.0 percent.

(2) When 1.5 percent or more methane is present in a return air split between the last working place on a working section and where that split of air meets another split of air, or the location where the split is used to ventilate seals or worked-out areas—

(i) Everyone except those persons referred to in § 104(c) of the Act shall be withdrawn from the affected area;

(ii) Other than intrinsically safe AMS, equipment in the affected area shall be deenergized, electric power shall be disconnected at the power source, and other mechanized equipment shall be shut off; and

(iii) No other work shall be permitted in the affected area until the methane concentration in the return air is less than 1.0 percent.

(d) *Return air split alternative.* (1) The provisions of this paragraph apply if—

(i) The quantity of air in the split ventilating the active workings is at least 27,000 cubic feet per minute in the

last open crosscut or the quantity specified in the approved ventilation plan, whichever is greater;

(ii) The methane content of the air in the split is continuously monitored during mining operations by an AMS that gives a visual and audible signal on the working section when the methane in the return air reaches 1.5 percent, and the methane content is monitored as specified in § 75.351; and

(iii) Rock dust is continuously applied with a mechanical duster to the return air course during coal production at a location in the air course immediately outby the most inby monitoring point.

(2) When 1.5 percent or more methane is present in a return air split between a point in the return opposite the section loading point and where that split of air meets another split of air or where the split of air is used to ventilate seals or worked-out areas—

(i) Changes or adjustments shall be made at once to the ventilation system to reduce the concentration of methane in the return air below 1.5 percent;

(ii) Everyone except those persons referred to in § 104(c) of the Act shall be withdrawn from the affected area;

(iii) Except for intrinsically safe AMS, equipment in the affected area shall be deenergized, electric power shall be disconnected at the power source, and other mechanized equipment shall be shut off; and

(iv) No other work shall be permitted in the affected area until the methane concentration in the return air is less than 1.5 percent.

(e) *Bleeders and other return air courses.* The concentration of methane in a bleeder split of air immediately before the air in the split joins another split of air, or in a return air course other than as described in paragraphs (c) and (d) of this section, shall not exceed 2.0 percent.

§ 75.324 Intentional changes in the ventilation system.

(a) A person designated by the operator shall supervise any intentional change in ventilation that—

(1) Alters the main air current or any split of the main air current in a manner that could materially affect the safety or health of persons in the mine; or

(2) Affects section ventilation by 9,000 cubic feet per minute of air or more in bituminous or lignite mines, or 5,000 cubic feet per minute of air or more in anthracite mines.

(b) Intentional changes shall be made only under the following conditions:

(1) Electric power shall be removed from areas affected by the ventilation change and mechanized equipment in those areas shall be shut off before the ventilation change begins.

(2) Only persons making the change in ventilation shall be in the mine.

(3) Electric power shall not be restored to the areas affected by the ventilation change and mechanized equipment shall not be restarted until a certified person has examined these areas for methane accumulation and for oxygen deficiency and has determined that the areas are safe.

§ 75.325 Air quantity.

(a)(1) In bituminous and lignite mines the quantity of air shall be at least 3,000 cubic feet per minute reaching each working face where coal is being cut, mined, drilled for blasting, or loaded. When a greater quantity is necessary to dilute, render harmless, and carry away flammable, explosive, noxious, and harmful gases, dusts, smoke, and fumes, this quantity shall be specified in the approved ventilation plan. A minimum air quantity may be required to be specified in the approved ventilation plan for other working places or working faces.

(2) The quantity of air reaching the working face shall be determined at or near the face end of the line curtain, ventilation tubing, or other ventilation control device. If the curtain, tubing, or device extends beyond the last row of permanent roof supports, the quantity of air reaching the working face shall be determined behind the line curtain or in the ventilation tubing at or near the last row of permanent supports.

(3) If machine mounted dust collectors or diffuser fans are used, the approved ventilation plan shall specify the operating volume of the dust collector or diffuser fan.

(b) In bituminous and lignite mines, the quantity of air reaching the last open crosscut of each set of entries or rooms on each working section and the quantity of air reaching the intake end of a pillar line shall be at least 9,000 cubic feet per minute unless a greater quantity is required to be specified in the approved ventilation plan. This minimum also applies to sections which are not operating but are capable of producing coal by simply energizing the equipment on the section.

(c) In longwall and shortwall mining systems—

(1) The quantity of air shall be at least 30,000 cubic feet per minute reaching the working face of each longwall, unless the operator demonstrates that a lesser air quantity will maintain continual compliance with applicable methane and respirable dust standards. This lesser quantity shall be specified in the approved ventilation plan. A quantity greater than 30,000 cubic feet per minute may be required to be specified in the approved ventilation plan.

(2) The velocity of air that will be provided to control methane and respirable dust in accordance with applicable standards on each longwall or shortwall and the locations where these velocities will be provided shall be specified in the approved ventilation plan. The locations specified shall be at least 50 feet but no more than 100 feet from the headgate and tailgate, respectively.

(d) Ventilation shall be maintained during installation and removal of mechanized mining equipment. The approved ventilation plan shall specify the minimum quantity of air, the locations where this quantity will be provided and the ventilation controls required.

(e) In anthracite mines, the quantity of air shall be as follows:

(1) At least 1,500 cubic feet per minute reaching each working face where coal is being mined, unless a greater quantity is required to be specified in the approved ventilation plan.

(2) At least 5,000 cubic feet per minute passing through the last open crosscut in each set of entries or rooms and at the intake end of any pillar line, unless a greater quantity is required to be specified in the approved ventilation plan.

(3) When robbing areas where air currents cannot be controlled and air measurements cannot be obtained, the air shall have perceptible movement.

(f) The minimum ventilating air quantity for an individual unit of diesel-powered equipment being operated shall be at least that specified on the approval plate for that equipment. Such air quantity shall be maintained—

(1) In any working place where the equipment is being operated;

(2) At the section loading point during any shift the equipment is being operated on the working section;

(3) In any entry where the equipment is being operated outby the section loading point in areas of the mine developed on or after April 25, 1997;

(4) In any air course with single or multiple entries where the equipment is being operated outby the section loading point in areas of the mine developed prior to April 25, 1997; and

(5) At any other location required by the district manager and specified in the approved ventilation plan.

(g) The minimum ventilating air quantity where multiple units of diesel-powered equipment are operated on working sections and in areas where mechanized mining equipment is being installed or removed must be at least the sum of that specified on the approval plates of all the diesel-powered equipment on the working section or in the area where mechanized mining equipment is being installed or removed. The minimum ventilating air quantity shall be specified in the approved ventilation plan. For working sections such air quantity must be maintained—

(1) In the last open crosscut of each set of entries or rooms in each working section;

(2) In the intake, reaching the working face of each longwall; and

(3) At the intake end of any pillar line.

(h) The following equipment may be excluded from the calculations of ventilating air quantity under paragraph (g) if such equipment exclusion is approved by the district manager and specified in the ventilation plan:

(1) Self-propelled equipment meeting the requirements of § 75.1908(b);

(2) Equipment that discharges its exhaust into intake air that is coursed directly to a return air course;

(3) Equipment that discharges its exhaust directly into a return air course; and

(4) Other equipment having duty cycles such that the emissions would not significantly affect the exposure of miners.

(i) A ventilating air quantity that is less than what is required by paragraph (g) of this section may be approved by the district manager in the ventilation plan based upon the results of sampling that demonstrate that the lesser air quantity will maintain continuous compliance with applicable TLV®'s.

(j) If during sampling required by § 70.1900(c) of this subchapter the ventilating air is found to contain concentrations of CO or NO_2 in excess of the action level specified by § 70.1900(c), higher action levels may be approved by the district manager based on the results of sampling that demonstrate that a higher action level will maintain continuous compliance with applicable TLV®'s. Action levels other than those specified in § 70.1900(c) shall be specified in the approved ventilation plan.

(k) As of November 25, 1997 the ventilating air quantity required where diesel-powered equipment is operated shall meet the requirements of paragraphs (f) through (j) of this section. Mine operators utilizing diesel-powered equipment in underground coal mines shall submit to the appropriate MSHA district manager a revised ventilation plan or appropriate amendments to the existing plan, in accordance with § 75.371, which implement the requirements of paragraphs (f) through (j) of this section.

[61 FR 9828, Mar. 11, 1996; 61 FR 26442, May 28, 1996; 61 FR 29288, June 10, 1996, as amended at 61 FR 55526, Oct. 25, 1996; 62 FR 34641, June 27, 1997]

EFFECTIVE DATE NOTE: At 79 FR 24987, May 1, 2014, § 75.325 was amended by revising paragraph (a)(2), effective Aug. 1, 2014. For the convenience of the user, the revised text is set forth as follows:

§ 75.325 Air quantity.

(a) * * *

(2) The quantity of air reaching the working face shall be determined at or near the face end of the line curtain, ventilation tubing, or other ventilation control device. If the curtain, tubing, or device extends beyond the last row of permanent roof supports, the quantity of air reaching the working face shall be determined behind the line curtain or in the ventilation tubing at or near the last row of permanent supports. When machine-mounted dust collectors are used in conjunction with blowing face ventilation systems, the quantity of air reaching the working face shall be determined with the dust collector turned off.

* * * * *

§ 75.326 Mean entry air velocity.

In exhausting face ventilation systems, the mean entry air velocity shall be at least 60 feet per minute reaching each working face where coal is being cut, mined, drilled for blasting, or loaded, and to any other working places as required in the approved ventilation plan. A lower mean entry air velocity may be approved in the ventilation plan if the lower velocity will maintain methane and respirable dust concentrations in accordance with the applicable levels. Mean entry air velocity shall be determined at or near the inby end of the line curtain, ventilation tubing, or other face ventilation control devices.

[61 FR 9828, Mar. 11, 1996; 61 FR 29288, June 10, 1996]

§ 75.327 Air courses and trolley haulage systems.

(a) In any mine opened on or after March 30, 1970, or in any new working section of a mine opened before that date, where trolley haulage systems are maintained and where trolley wires or trolley feeder wires are installed, an authorized representative of the Secretary shall require enough entries or rooms as intake air courses to limit the velocity of air currents in the haulageways to minimize the hazards of fires and dust explosions in the haulageways.

(b) Unless the district manager approves a higher velocity, the velocity of the air current in the trolley haulage entries shall be limited to not more than 250 feet per minute. A higher air velocity may be required to limit the

methane content in these haulage entries or elsewhere in the mine to less than 1.0 percent and provide an adequate supply of oxygen.

§ 75.330 Face ventilation control devices.

(a) Brattice cloth, ventilation tubing and other face ventilation control devices shall be made of flame-resistant material approved by MSHA.

(b)(1) Ventilation control devices shall be used to provide ventilation to dilute, render harmless, and to carry away flammable, explosive, noxious, and harmful gases, dusts, smoke, and fumes—

(i) To each working face from which coal is being cut, mined, drilled for blasting, or loaded; and

(ii) To any other working places as required by the approved ventilation plan.

(2) These devices shall be installed at a distance no greater than 10 feet from the area of deepest penetration to which any portion of the face has been advanced unless an alternative distance is specified and approved in the ventilation plan. Alternative distances specified shall be capable of maintaining concentrations of respirable dust, methane, and other harmful gases, in accordance with the levels specified in the applicable sections of this chapter.

(c) When the line brattice or any other face ventilation control device is damaged to an extent that ventilation of the working face is inadequate, production activities in the working place shall cease until necessary repairs are made and adequate ventilation is restored.

[61 FR 9828, Mar. 11, 1996; 61 FR 29288, June 10, 1996]

§ 75.331 Auxiliary fans and tubing.

(a) When auxiliary fans and tubing are used for face ventilation, each auxiliary fan shall be—

(1) Permissible, if the fan is electrically operated;

(2) Maintained in proper operating condition;

(3) Deenergized or shut off when no one is present on the working section; and

(4) Located and operated to avoid recirculation of air.

(b) If a deficiency exists in any auxiliary fan system, the deficiency shall be corrected or the auxiliary fan shall be deenergized immediately.

(c) If the air passing through an auxiliary fan or tubing contains 1.0 percent or more methane, power to electrical equipment in the working place and to the auxiliary fan shall be deenergized, and other mechanized equipment in the working place shall be shut off until the methane concentration is reduced to less than 1.0 percent.

(d) When an auxiliary fan is stopped—

(1) Line brattice or other face ventilation control devices shall be used to maintain ventilation to affected faces; and

(2) Electrical equipment in the affected working places shall be disconnected at the power source, and other mechanized equipment shall be shut off until ventilation to the working place is restored.

§ 75.332 Working sections and working places.

(a)(1) Each working section and each area where mechanized mining equipment is being installed or removed, shall be ventilated by a separate split of intake air directed by overcasts, undercasts or other permanent ventilation controls.

(2) When two or more sets of mining equipment are simultaneously engaged in cutting, mining, or loading coal or rock from working places within the same working section, each set of mining equipment shall be on a separate split of intake air.

(3) For purposes of this section, a set of mining equipment includes a single loading machine, a single continuous mining machine, or a single longwall or shortwall mining machine.

(b)(1) Air that has passed through any area that is not examined under §§ 75.360, 75.361 or 75.364 of this subpart, or through an area where second mining has been done shall not be used to ventilate any working place. Second mining is intentional retreat mining where pillars have been wholly or partially removed, regardless of the amount of recovery obtained.

(2) Air that has passed by any opening of any unsealed area that is not examined under §§ 75.360, 75.361 or 75.364 of this subpart, shall not be used to ventilate any working place.

§ 75.333 Ventilation controls.

(a) For purposes of this section, ''doors'' include any door frames.

(b) Permanent stoppings or other permanent ventilation control devices constructed after November 15, 1992, shall be built and maintained—

(1) Between intake and return air courses, except temporary controls may be used in rooms that are 600 feet or less from the centerline of the entry from which the room was developed including where continuous face haulage systems are used in such rooms. Unless otherwise approved in the ventilation plan, these stoppings or controls shall be maintained to and including the third connecting crosscut outby the working face;

(2) To separate belt conveyor haulageways from return air courses, except where belt entries in areas of mines developed before March 30, 1970, are used as return air courses;

(3) To separate belt conveyor haulageways from intake air courses when the air in the intake air courses is used to provide air to active working places. Temporary ventilation controls may be used in rooms that are 600 feet or less from the centerline of the entry from which the rooms were developed including where continuous face haulage systems are used in such rooms. When continuous face haulage systems are used, permanent stoppings or other permanent ventilation control devices shall be built and maintained to the outby most point of travel of the dolly or 600 feet from the point of deepest penetration in the conveyor belt entry, whichever distance is closer to the point of deepest penetration, to separate the continuous haulage entry from the intake entries;

(4) To separate the primary escapeway from belt and trolley haulage entries, as required by § 75.380(g). For the purposes of § 75.380(g), the loading point for a continuous haulage system shall be the outby most point of travel of the dolly or 600 feet from the point of deepest penetration, whichever distance is less; and

(5) In return air courses to direct air into adjacent worked-out areas.

(c) Personnel doors shall be constructed of noncombustible material and shall be of sufficient strength to serve their intended purpose of maintaining separation and permitting travel between air courses, and shall be installed as follows in permanent stoppings constructed after November 15, 1992:

(1) The distance between personnel doors shall be no more than 300 feet in seam heights below 48 inches and 600 feet in seam heights 48 inches or higher.

(2) The location of all personnel doors in stoppings along escapeways shall be clearly marked so that the doors may be easily identified by anyone traveling in the escapeway and in the entries on either side of the doors.

(3) When not in use, personnel doors shall be closed.

(4) An airlock shall be established where the air pressure differential between air courses creates a static force exceeding 125 pounds on closed personnel doors along escapeways.

(d) Doors, other than personnel doors, constructed after November 15, 1992, that are used in lieu of permanent stoppings or to control ventilation within an air course shall be:

(1) Made of noncombustible material or coated on all accessible surfaces with flame-retardant materials having a flame-spread index of 25 or less, as tested under ASTM E162–87, ''Standard Test Method for Surface Flammability of Materials Using A Radiant Heat Energy Source.'' This publication is incorporated by reference and may be inspected at any MSHA Coal Mine Safety and Health district office, or at MSHA's Office of Standards, Regulations, and Variances, 1100 Wilson Blvd., Room 2352, Arlington, Virginia 22209–3939, and at the National Archives and Records Administration (NARA). For information on the availability of this material at NARA, call 202–741–6030, or go to: *http://www.archives.gov/federal_register/code_of_federal_regulations/ibr_locations.html*. In addition, copies of the document can be purchased from

the American Society for Testing (ASTM), 100 Barr Harbor Drive, PO Box C700, West Conshohocken, PA 19428–2959; *http://www.astm.org*. This incorporation by reference was approved by the Director of the Federal Register in accordance with 5 U.S.C. 552(a) and 1 CFR part 51.

(2) Of sufficient strength to serve their intended purpose of maintaining separation and permitting travel between or within air courses or entries.

(3) Installed in pairs to form an airlock. When an airlock is used, one side of the airlock shall remain closed. When not in use, both sides shall be closed.

(e)(1)(i) Except as provided in paragraphs (e)(2), (e)(3) and (e)(4) of this section all overcasts, undercasts, shaft partitions, permanent stoppings, and regulators, installed after June 10, 1996, shall be constructed in a traditionally accepted method and of materials that have been demonstrated to perform adequately or in a method and of materials that have been tested and shown to have a minimum strength equal to or greater than the traditionally accepted in-mine controls. Tests may be performed under ASTM E72–80, ''Standard Methods of Conducting Strength Tests of Panels for Building Construction'' (Section 12—Transverse Load—Specimen Vertical, load, only), or the operator may conduct comparative in-mine tests. In-mine tests shall be designed to demonstrate the comparative strength of the proposed construction and a traditionally accepted in-mine control. The publication ASTM E72–80, ''Standard Methods of Conducting Strength Tests of Panels for Building Construction'' is incorporated by reference and may be inspected at any MSHA Coal Mine Safety and Health district office, or at MSHA's Office of Standards, Regulations, and Variances, 1100 Wilson Blvd., Room 2352, Arlington, Virginia 22209–3939, and at the National Archives and Records Administration (NARA). For information on the availability of this material at NARA, call 202–741–6030, or go to: *http://www.archives.gov/federal_register/code_of_federal_regulations/ibr_locations.html*. In addition, copies of the document can be purchased from the American Society for Testing (ASTM), 100 Barr Harbor Drive, PO Box C700, West Conshohocken, PA 19428–2959; *http://www.astm.org*. This incorporation by reference was approved by the Director of the Federal Register in accordance with 5 U.S.C. 552(a) and 1 CFR part 51.

(ii) All overcasts, undercasts, shaft partitions, permanent stoppings, and regulators, installed after November 15, 1992, shall be constructed of noncombustible material. Materials that are suitable for the construction of overcasts, undercasts, shaft partitions, permanent stoppings, and regulators include concrete, concrete block, brick, cinder block, tile, or steel. No ventilation controls installed after November 15, 1992, shall be constructed of aluminum.

(2) In anthracite mines, permanent stoppings may be constructed of overlapping layers of hardwood mine boards, if the stoppings are a minimum 2 inches thick.

(3) When timbers are used to create permanent stoppings in heaving or caving areas, the stoppings shall be coated on all accessible surfaces with a flame-retardant material having a flame-spread index of 25 or less, as tested under ASTM E162–87, ''Standard Test Method for Surface Flammability of Materials Using A Radiant Heat Energy Source.'' This publication is incorporated by reference and may be inspected at any MSHA Coal Mine Safety and Health district office, or at MSHA's Office of Standards, Regulations, and Variances, 1100 Wilson Blvd., Room 2352, Arlington, Virginia 22209–3939, and at the National Archives and Records Administration (NARA). For information on the availability of this material at NARA, call 202–741–6030, or go to: *http://www.archives.gov/federal_register/code_of_federal_regulations/ibr_locations.html*. In addition, copies of the document can be purchased from the American Society for Testing (ASTM), 100 Barr Harbor Drive, PO Box C700, West Conshohocken, PA 19428–2959; *http://www.astm.org*. This incorporation by reference was approved by the Director of the Federal Register in accordance with 5 U.S.C. 552(a) and 1 CFR part 51.

(4) In anthracite mines, doors and regulators may be constructed of overlapping layers of hardwood boards, if the doors, door frames, and regulators are a minimum 2 inches thick.

(f) When sealants are applied to ventilation controls, the sealant shall have a flame-spread index of 25 or less under ASTM E162–87, ''Standard Test Method for Surface Flammability of Materials Using A Radiant Heat Energy Source.'' This publication is incorporated by reference and may be inspected at any MSHA Coal Mine Safety and Health district office, or at MSHA's Office of Standards, Regulations, and Variances, 1100 Wilson Blvd., Room 2352, Arlington, Virginia 22209–3939, and at the National Archives and Records Administration (NARA). For information on the availability of this material at NARA, call 202–741–6030, or go to: *http://www.archives.gov/federal_register/code_of_federal_regulations/ibr_locations.html*. In addition, copies of the document can be purchased from the American Society for Testing (ASTM), 100 Barr Harbor Drive, PO Box C700, West Conshohocken, PA 19428–2959; *http://www.astm.org*. This incorporation by reference was approved by the Director of the Federal Register in accordance with 5 U.S.C. 552(a) and 1 CFR part 51.

(g) Before mining is discontinued in an entry or room that is advanced more than 20 feet from the inby rib, a crosscut shall be made or line brattice shall be installed and maintained to provide adequate ventilation. When conditions such as methane liberation warrant a distance less than 20 feet, the approved ventilation plan shall specify the location of such rooms or entries and the maximum distance they will be developed before a crosscut is made or line brattice is installed.

(h) All ventilation controls, including seals, shall be maintained to serve the purpose for which they were built.

[61 FR 9829, Mar. 11, 1996; 61 FR 20877, May 8, 1996; 61 FR 26442, May 28, 1996; 61 FR 29288, 29289, June 10, 1996, as amended at 67 FR 38386, June 4, 2002; 71 FR 16668, Apr. 3, 2006; 73 FR 80612, Dec. 31, 2008]

§ 75.334 Worked-out areas and areas where pillars are being recovered.

(a) Worked-out areas where no pillars have been recovered shall be—

(1) Ventilated so that methane-air mixtures and other gases, dusts, and fumes from throughout the worked-out areas are continuously diluted and routed into a return air course or to the surface of the mine; or

(2) Sealed.

(b)(1) During pillar recovery a bleeder system shall be used to control the air passing through the area and to continuously dilute and move methane-air mixtures and other gases, dusts, and fumes from the worked-out area away from active workings and into a return air course or to the surface of the mine.

(2) After pillar recovery a bleeder system shall be maintained to provide ventilation to the worked-out area, or the area shall be sealed.

(c) The approved ventilation plan shall specify the following:

(1) The design and use of bleeder systems;

(2) The means to determine the effectiveness of bleeder systems;

(3) The means for adequately maintaining bleeder entries free of obstructions such as roof falls and standing water; and

(4) The location of ventilating devices such as regulators, stoppings and bleeder connectors used to control air movement through the worked-out area.

(d) If the bleeder system used does not continuously dilute and move methane-air mixtures and other gases, dusts, and fumes away from worked-out areas into a return air course or to the surface of the mine, or it cannot be determined by examinations or evaluations under § 75.364 that the bleeder system is working effectively, the worked-out area shall be sealed.

(e) Each mining system shall be designed so that each worked-out area can be sealed. The approved ventilation plan shall specify the location and the sequence of construction of proposed seals.

(f) In place of the requirements of paragraphs (a) and (b) of this section, for mines with a demonstrated history of spontaneous combustion, or that are

located in a coal seam determined to be susceptible to spontaneous combustion, the approved ventilation plan shall specify the following:

(1) Measures to detect methane, carbon monoxide, and oxygen concentrations during and after pillar recovery, and in worked-out areas where no pillars have been recovered, to determine if the areas must be ventilated or sealed.

(2) Actions that will be taken to protect miners from the hazards of spontaneous combustion.

(3) If a bleeder system will not be used, the methods that will be used to control spontaneous combustion, accumulations of methane-air mixtures, and other gases, dusts, and fumes in the worked-out area.

§ 75.335 Seal strengths, design applications, and installation.

(a) *Seal strengths.* Seals constructed on or after October 20, 2008 shall be designed, constructed, and maintained to withstand—

(1)(i) At least 50-psi overpressure when the atmosphere in the sealed area is monitored and maintained inert and designed using a pressure-time curve with an instantaneous overpressure of at least 50 psi. A minimum overpressure of at least 50 psi shall be maintained for at least four seconds then released instantaneously.

(ii) Seals constructed to separate the active longwall panel from the longwall panel previously mined shall be designed using a pressure-time curve with a rate of pressure rise of at least 50 psi in 0.1 second. A minimum overpressure of at least 50 psi shall be maintained; or

(2)(i) Overpressures of at least 120 psi if the atmosphere in the sealed area is not monitored, is not maintained inert, the conditions in paragraphs (a)(3)(i) through (iii) of this section are not present, and the seal is designed using a pressure-time curve with an instantaneous overpressure of at least 120 psi. A minimum overpressure of 120 psi shall be maintained for at least four seconds then released instantaneously.

(ii) Seals constructed to separate the active longwall panel from the longwall panel previously mined shall be designed using a pressure-time curve with a rate of pressure rise of 120 psi in 0.25 second. A minimum overpressure of 120 psi shall be maintained; or

(3) Overpressures greater than 120 psi if the atmosphere in the sealed area is not monitored and is not maintained inert, and

(i) The atmosphere in the sealed area is likely to contain homogeneous mixtures of methane between 4.5 percent and 17.0 percent and oxygen exceeding 17.0 percent throughout the entire area;

(ii) Pressure piling could result in overpressures greater than 120 psi in the area to be sealed; or

(iii) Other conditions are encountered, such as the likelihood of a detonation in the area to be sealed.

(iv) Where the conditions in paragraphs (a)(3)(i), (ii), or (iii) of this section are encountered, the mine operator shall revise the ventilation plan to address the potential hazards. The plan shall include seal strengths sufficient to address such conditions.

(b) *Seal design applications.* Seal design applications from seal manufacturers or mine operators shall be in accordance with paragraphs (b)(1) or (b)(2) of this section and submitted for approval to MSHA's Office of Technical Support, Pittsburgh Safety and Health Technology Center, P.O. Box 18233, Cochrans Mill Road, Pittsburgh, PA 15236.

(1) An engineering design application shall—

(i) Address gas sampling pipes, water drainage systems, methods to reduce air leakage, pressure-time curve, fire resistance characteristics, flame spread index, entry size, engineering design and analysis, elasticity of design, material properties, construction specifications, quality control, design references, and other information related to seal construction;

(ii) Be certified by a professional engineer that the design of the seal is in accordance with current, prudent engineering practices and is applicable to conditions in an underground coal mine; and

(iii) Include a summary of the installation procedures related to seal construction; or

(2) Each application based on full-scale explosion tests or equivalent

means of physical testing shall address the following requirements to ensure that a seal can reliably meet the seal strength requirements:

(i) Certification by a professional engineer that the testing was done in accordance with current, prudent engineering practices for construction in a coal mine;

(ii) Technical information related to the methods and materials;

(iii) Supporting documentation;

(iv) An engineering analysis to address differences between the seal support during test conditions and the range of conditions in a coal mine; and

(v) A summary of the installation procedures related to seal construction.

(3) MSHA will notify the applicant if additional information or testing is required. The applicant shall provide this information, arrange any additional or repeat tests, and provide prior notification to MSHA of the location, date, and time of such test(s).

(4) MSHA will notify the applicant, in writing, whether the design is approved or denied. If the design is denied, MSHA will specify, in writing, the deficiencies of the application, or necessary revisions.

(5) Once the seal design is approved, the approval holder shall promptly notify MSHA, in writing, of all deficiencies of which they become aware.

(c) *Seal installation approval*. The installation of the approved seal design shall be subject to approval in the ventilation plan. The mine operator shall—

(1) Retain the seal design approval and installation information for as long as the seal is needed to serve the purpose for which it was built.

(2) Designate a professional engineer to conduct or have oversight of seal installation and certify that the provisions in the approved seal design specified in this section have been addressed and are applicable to conditions at the mine. A copy of the certification shall be submitted to the District Manager with the information provided in paragraph (c)(3) of this section and a copy of the certification shall be retained for as long as the seal is needed to serve the purpose for which it was built.

(3) Provide the following information for approval in the ventilation plan—

(i) The MSHA Technical Support Approval Number;

(ii) A summary of the installation procedures;

(iii) The mine map of the area to be sealed and proposed seal locations that include the deepest points of penetration prior to sealing. The mine map shall be certified by a professional engineer or a professional land surveyor.

(iv) Specific mine site information, including—

(A) Type of seal;

(B) Safety precautions taken prior to seal achieving design strength;

(C) Methods to address site-specific conditions that may affect the strength and applicability of the seal including set-back distances;

(D) Site preparation;

(E) Sequence of seal installations;

(F) Projected date of completion of each set of seals;

(G) Supplemental roof support inby and outby each seal;

(H) Water flow estimation and dimensions of the water drainage system through the seals;

(I) Methods to ventilate the outby face of seals once completed;

(J) Methods and materials used to maintain each type of seal;

(K) Methods to address shafts and boreholes in the sealed area;

(L) Assessment of potential for overpressures greater than 120 psi in sealed area;

(M) Additional sampling locations; and

(N) Additional information required by the District Manager.

[73 FR 21206, Apr. 18, 2008]

§ 75.336 Sampling and monitoring requirements.

(a) A certified person as defined in § 75.100 shall monitor atmospheres of sealed areas. Sealed areas shall be monitored, whether ingassing or outgassing, for methane and oxygen concentrations and the direction of leakage.

(1) Each sampling pipe and approved sampling location shall be sampled at least every 24 hours.

(i) Atmospheres with seals of 120 psi or greater shall be sampled until the

design strength is reached for every seal used to seal the area.

(ii) Atmospheres with seals less than 120 psi constructed before October 20, 2008 shall be monitored for methane and oxygen concentrations and maintained inert. The operator may request that the District Manager approve different sampling locations and frequencies in the ventilation plan, provided at least one sample is taken at each set of seals at least every 7 days.

(iii) Atmospheres with seals less than 120 psi constructed after October 20, 2008 shall be monitored for methane and oxygen concentrations and maintained inert. The operator may request that the District Manager approve different sampling locations and frequencies in the ventilation plan after a minimum of 14 days and after the seal design strength is reached, provided at least one sample is taken at each set of seals at least every 7 days.

(2) The mine operator shall evaluate the atmosphere in the sealed area to determine whether sampling through the sampling pipes in seals and approved locations provides appropriate sampling locations of the sealed area. The mine operator shall make the evaluation immediately after the minimum 14-day required sampling, if the mine ventilation system is reconfigured, if changes occur that adversely affect the sealed area, or if the District Manager requests an evaluation. When the results of the evaluations indicate the need for additional sampling locations, the mine operator shall provide the additional locations and have them approved in the ventilation plan. The District Manager may require additional sampling locations and frequencies in the ventilation plan.

(3) Mine operators with an approved ventilation plan addressing spontaneous combustion pursuant to § 75.334(f) shall sample the sealed atmosphere in accordance with the ventilation plan.

(4) The District Manager may approve in the ventilation plan the use of a continuous monitoring system in lieu of monitoring provisions in this section.

(b)(1) Except as provided in § 75.336(d), the atmosphere in the sealed area is considered inert when the oxygen concentration is less than 10.0 percent or the methane concentration is less than 3.0 percent or greater than 20.0 percent.

(2) Immediate action shall be taken by the mine operator to restore an inert sealed atmosphere behind seals with strengths less than 120 psi. Until the atmosphere in the sealed area is restored to an inert condition, the sealed atmosphere shall be monitored at each sampling pipe and approved location at least once every 24 hours.

(c) Except as provided in § 75.336(d), when a sample is taken from the sealed atmosphere with seals of less than 120 psi and the sample indicates that the oxygen concentration is 10 percent or greater and methane is between 4.5 percent and 17 percent, the mine operator shall immediately take an additional sample and then immediately notify the District Manager. When the additional sample indicates that the oxygen concentration is 10 percent or greater and methane is between 4.5 percent and 17 percent, persons shall be withdrawn from the affected area which is the entire mine or other affected area identified by the operator and approved by the District Manager in the ventilation plan, except those persons referred to in § 104(c) of the Act. The operator may identify areas in the ventilation plan to be approved by the District Manager where persons may be exempted from withdrawal. The operator's request shall address the location of seals in relation to: Areas where persons work and travel in the mine; escapeways and potential for damage to the escapeways; and ventilation systems and controls in areas where persons work or travel and where ventilation is used for escapeways. The operator's request shall also address the gas concentration of other sampling locations in the sealed area and other required information. Before miners reenter the mine, the mine operator shall have a ventilation plan revision approved by the District Manager specifying the actions to be taken.

(d) In sealed areas with a demonstrated history of carbon dioxide or sealed areas where inert gases have been injected, the operator may request that the District Manager approve in the ventilation plan an alternative method to determine if the

sealed atmosphere is inert and when miners have to be withdrawn. The mine operator shall address in the ventilation plan the specific levels of methane, carbon dioxide, nitrogen and oxygen; the sampling methods and equipment used; and the methods to evaluate these concentrations underground at the seal.

(e) *Recordkeeping*. (1) The certified person shall promptly record each sampling result including the location of the sampling points, whether ingassing or outgassing, and oxygen and methane concentrations. The results of oxygen and methane samples shall be recorded as the percentage of oxygen and methane measured by the certified person and any hazardous condition found in accordance with § 75.363.

(2) The mine operator shall retain sampling records at the mine for at least one year from the date of the sampling.

[73 FR 21207, Apr. 18, 2008; 73 FR 27730, May 14, 2008]

§ 75.337 Construction and repair of seals.

(a) The mine operator shall maintain and repair seals to protect miners from hazards of sealed areas.

(b) Prior to sealing, the mine operator shall—

(1) Remove insulated cables, batteries, and other potential electric ignition sources from the area to be sealed when constructing seals, unless it is not safe to do so. If ignition sources cannot safely be removed, seals must be constructed to at least 120 psi;

(2) Remove metallic objects through or across seals; and

(3) Breach or remove all stoppings in the first crosscut inby the seals immediately prior to sealing the area.

(c) A certified person designated by the mine operator shall directly supervise seal construction and repair and—

(1) Examine each seal site immediately prior to construction or repair to ensure that the site is in accordance with the approved ventilation plan;

(2) Examine each seal under construction or repair during each shift to ensure that the seal is being constructed or repaired in accordance with the approved ventilation plan;

(3) Examine each seal upon completion of construction or repair to ensure that construction or repair is in accordance with the approved ventilation plan;

(4) Certify by initials, date, and time that the examinations were made; and

(5) Make a record of the examination at the completion of any shift during which an examination was conducted. The record shall include each deficiency and the corrective action taken. The record shall be countersigned by the mine foreman or equivalent mine official by the end of the mine foreman's or equivalent mine official's next regularly scheduled working shift. The record shall be kept at the mine for one year.

(d) Upon completion of construction of each seal a senior mine management official, such as a mine manager or superintendent, shall certify that the construction, installation, and materials used were in accordance with the approved ventilation plan. The mine operator shall retain the certification for as long as the seal is needed to serve the purpose for which it was built.

(e) The mine operator shall—

(1) Notify the District Manager between two and fourteen days prior to commencement of seal construction;

(2) Notify the District Manager, in writing, within five days of completion of a set of seals and provide a copy of the certification required in paragraph (d) of this section; and

(3) Submit a copy of quality control results to the District Manager for seal material properties specified by § 75.335 within 30 days of completion of quality control tests.

(f) *Welding, cutting, and soldering*. Welding, cutting, and soldering with an arc or flame are prohibited within 150 feet of a seal. An operator may request a different location in the ventilation plan to be approved by the District Manager. The operator's request must address methods the mine operator will use to continuously monitor atmospheric conditions in the sealed area during welding or burning; the airflow conditions in and around the work area; the rock dust and water application methods; the availability of fire extinguishers on hand; the procedures

to maintain safe conditions, and other relevant factors.

(g) *Sampling pipes.* (1) For seals constructed after April 18, 2008, one nonmetallic sampling pipe shall be installed in each seal that shall extend into the center of the first connecting crosscut inby the seal. If an open crosscut does not exist, the sampling pipe shall extend one-half of the distance of the open entry inby the seal.

(2) Each sampling pipe shall be equipped with a shut-off valve and appropriate fittings for taking gas samples.

(3) The sampling pipes shall be labeled to indicate the location of the sampling point when more than one sampling pipe is installed through a seal.

(4) If a new seal is constructed to replace or reinforce an existing seal with a sampling pipe, the sampling pipe in the existing seal shall extend through the new seal. An additional sampling pipe shall be installed through each new seal to sample the area between seals, as specified in the approved ventilation plan.

(h) *Water drainage system.* For each set of seals constructed after April 18, 2008, the seal at the lowest elevation shall have a corrosion-resistant, nonmetallic water drainage system. Seals shall not impound water or slurry. Water or slurry shall not accumulate within the sealed area to any depth that can adversely affect a seal.

[73 FR 21207, Apr. 18, 2008]

§ 75.338 Training.

(a) Certified persons conducting sampling shall be trained in the use of appropriate sampling equipment, procedures, location of sampling points, frequency of sampling, size and condition of the sealed area, and the use of continuous monitoring systems if applicable before they conduct sampling, and annually thereafter. The mine operator shall certify the date of training provided to certified persons and retain each certification for two years.

(b) Miners constructing or repairing seals, designated certified persons, and senior mine management officials shall be trained prior to constructing or repairing a seal and annually thereafter. The training shall address materials and procedures in the approved seal design and ventilation plan. The mine operator shall certify the date of training provided each miner, certified person, and senior mine management official and retain each certification for two years.

[73 FR 21208, Apr. 18, 2008]

§ 75.339 Seals records.

(a) The table entitled ''Seal Recordkeeping Requirements'' lists records the operator shall maintain and the retention period for each record.

TABLE—§ 75.339(a) SEAL RECORDKEEPING REQUIREMENTS

Record	Section reference	Retention time
(1) Approved seal design	75.335(c)(1)	As long as the seal is needed to serve the purpose for which it is built.
(2) Certification of Provisions of Approved Seal Design is Addressed.	75.335(c)(2)	As long as the seal is needed to serve the purpose for which it is built.
(3) Gas sampling records	75.336(e)(2)	1 year.
(4) Record of examinations	75.337(c)(5)	1 year.
(5) Certification of seal construction, installation, and materials.	75.337(d)	As long as the seal is needed to serve the purpose for which it is built.
(6) Certification of Training for Persons that Sample.	75.338(a)	2 years.
(7) Certification of Training for Persons that Perform Seal Construction and Repair.	75.338(b)	2 years.

(b) Records required by §§ 75.335, 75.336, 75.337 and 75.338 shall be retained at a surface location at the mine in a secure book that is not susceptible to alteration. The records may be retained electronically in a computer system that is secure and not susceptible to alteration, if the mine operator can immediately access the record from the mine site.

(c) Upon request from an authorized representative of the Secretary of Labor, the Secretary of Health and Human Services, or from the authorized representative of miners, mine operators shall promptly provide access to any record listed in the table in this section.

(d) Whenever an operator ceases to do business or transfers control of the mine to another entity, that operator shall transfer all records required to be maintained by this part, or a copy thereof, to any successor operator who shall maintain them for the required period.

[73 FR 21208, Apr. 18, 2008]

§ 75.340 Underground electrical installations.

(a) Underground transformer stations, battery charging stations, substations, rectifiers, and water pumps shall be housed in noncombustible structures or areas or be equipped with a fire suppression system meeting the requirements of § 75.1107–3 through § 75.1107–16.

(1) When a noncombustible structure or area is used, these installations shall be—

(i) Ventilated with intake air that is coursed into a return air course or to the surface and that is not used to ventilate working places; or

(ii) Ventilated with intake air that is monitored for carbon monoxide or smoke by an AMS installed and operated according to § 75.351. Monitoring of intake air ventilating battery charging stations shall be done with sensors not affected by hydrogen; or

(iii) Ventilated with intake air and equipped with sensors to monitor for heat and for carbon monoxide or smoke. Monitoring of intake air ventilating battery charging stations shall be done with sensors not affected by hydrogen. The sensors shall deenergize power to the installation, activate a visual and audible alarm located outside of and on the intake side of the enclosure, and activate doors that will automatically close when either of the following occurs:

(A) The temperature in the noncombustible structure reaches 165 °F; or

(B) The carbon monoxide concentration reaches 10 parts per million above the ambient level for the area, or the optical density of smoke reaches 0.022 per meter. At least every 31 days, sensors installed to monitor for carbon monoxide shall be calibrated with a known concentration of carbon monoxide and air sufficient to activate the closing door, or each smoke sensor shall be tested to determine that it functions correctly.

(2) When a fire suppression system is used, these installations shall be—

(i) Ventilated with intake air that is coursed into a return air course or to the surface and that is not used to ventilate working places; or

(ii) Ventilated with intake air that is monitored for carbon monoxide or smoke by an AMS installed and operated according to § 75.351. Monitoring of intake air ventilating battery charging stations shall be done with sensors not affected by hydrogen.

(b) This section does not apply to—

(1) Rectifiers and power centers with transformers that are either dry-type or contain nonflammable liquid, if they are located at or near the section and are moved as the working section advances or retreats;

(2) Submersible pumps;

(3) Permissible pumps and associated permissible switchgear;

(4) Pumps located on or near the section and that are moved as the working section advances or retreats;

(5) Pumps installed in anthracite mines; and

(6) Small portable pumps.

§ 75.341 Direct-fired intake air heaters.

(a) If any system used to heat intake air malfunctions, the heaters affected shall switch off automatically.

(b) Thermal overload devices shall protect the blower motor from overheating.

(c) The fuel supply shall turn off automatically if a flame-out occurs.

(d) Each heater shall be located or guarded to prevent contact by persons and shall be equipped with a screen at the inlet to prevent combustible materials from passing over the burner units.

(e) If intake air heaters use liquefied fuel systems—

(1) Hydrostatic relief valves installed on vaporizers and on storage tanks shall be vented; and

(2) Fuel storage tanks shall be located or protected to prevent fuel from leaking into the mine.

(f) Following any period of 8 hours or more during which a heater does not operate, the heater and its associated components shall be examined within its first hour of operation. Additionally, each heater and its components shall be examined at least once each shift that the heater operates. The examination shall include measurement of the carbon monoxide concentration at the bottom of each shaft, slope, or in the drift opening where air is being heated. The measurements shall be taken by a person designated by the operator or by a carbon monoxide sensor that is calibrated with a known concentration of carbon monoxide and air at least once every 31 days. When the carbon monoxide concentration at this location reaches 50 parts per million, the heater causing the elevated carbon monoxide level shall be shut down.

§ 75.342 Methane monitors.

(a)(1) MSHA approved methane monitors shall be installed on all face cutting machines, continuous miners, longwall face equipment, loading machines, and other mechanized equipment used to extract or load coal within the working place.

(2) The sensing device for methane monitors on longwall shearing machines shall be installed at the return air end of the longwall face. An additional sensing device also shall be installed on the longwall shearing machine, downwind and as close to the cutting head as practicable. An alternative location or locations for the sensing device required on the longwall shearing machine may be approved in the ventilation plan.

(3) The sensing devices of methane monitors shall be installed as close to the working face as practicable.

(4) Methane monitors shall be maintained in permissible and proper operating condition and shall be calibrated with a known air-methane mixture at least once every 31 days. To assure that methane monitors are properly maintained and calibrated, the operator shall:

(i) Use persons properly trained in the maintenance, calibration, and permissibility of methane monitors to calibrate and maintain the devices.

(ii) Maintain a record of all calibration tests of methane monitors. Records shall be maintained in a secure book that is not susceptible to alteration or electronically in a computer system so as to be secure and not susceptible to alteration.

(iii) Retain the record of calibration tests for 1 year from the date of the test. Records shall be retained at a surface location at the mine and made available for inspection by authorized representatives of the Secretary and the representative of miners.

(b)(1) When the methane concentration at any methane monitor reaches 1.0 percent the monitor shall give a warning signal.

(2) The warning signal device of the methane monitor shall be visible to a person who can deenergize electric equipment or shut down diesel-powered equipment on which the monitor is mounted.

(c) The methane monitor shall automatically deenergize electric equipment or shut down diesel-powered equipment on which it is mounted when—

(1) The methane concentration at any methane monitor reaches 2.0 percent; or

(2) The monitor is not operating properly.

[61 FR 9829, Mar. 11, 1996, as amended at 61 FR 55527, Oct. 25, 1996]

§ 75.343 Underground shops.

(a) Underground shops shall be equipped with an automatic fire suppression system meeting the requirements of § 75.1107–3 through § 75.1107–16, or be enclosed in a noncombustible structure or area.

(b) Underground shops shall be ventilated with intake air that is coursed directly into a return air course.

§ 75.344 Compressors.

(a) Except compressors that are components of equipment such as locomotives and rock dusting machines and compressors of less than 5 horsepower,

electrical compressors including those that may start automatically shall be:

(1) Continuously attended by a person designated by the operator who can see the compressor at all times during its operation. Any designated person attending the compressor shall be capable of activating the fire suppression system and deenergizing or shutting-off the compressor in the event of a fire; or,

(2) Enclosed in a noncombustible structure or area which is ventilated by intake air coursed directly into a return air course or to the surface and equipped with sensors to monitor for heat and for carbon monoxide or smoke. The sensors shall deenergize power to the compressor, activate a visual and audible alarm located outside of and on the intake side of the enclosure, and activate doors to automatically enclose the noncombustible structure or area when either of the following occurs:

(i) The temperature in the noncombustible structure or area reaches 165 °F.

(ii) The carbon monoxide concentration reaches 10 parts per million above the ambient level for the area, or the optical density of smoke reaches 0.022 per meter. At least once every 31 days, sensors installed to monitor for carbon monoxide shall be calibrated with a known concentration of carbon monoxide and air sufficient to activate the closing door, and each smoke sensor shall be tested to determine that it functions correctly.

(b) Compressors, except those exempted in paragraph (a), shall be equipped with a heat activated fire suppression system meeting the requirements of 75.1107–3 through 75.1107–16.

(c) Two portable fire extinguishers or one extinguisher having at least twice the minimum capacity specified for a portable fire extinguisher in § 75.1100–1(e) shall be provided for each compressor.

(d) Notwithstanding the requirements of § 75.1107–4, upon activation of any fire suppression system used under paragraph (b) of this section, the compressor shall be automatically deenergized or automatically shut off.

[61 FR 9829, Mar. 11, 1996, as amended at 61 FR 55527, Oct. 25, 1996]

§ 75.350 Belt air course ventilation.

(a) The belt air course must not be used as a return air course; and except as provided in paragraph (b) of this section, the belt air course must not be used to provide air to working sections or to areas where mechanized mining equipment is being installed or removed.

(1) The belt air course must be separated with permanent ventilation controls from return air courses and from other intake air courses except as provided in paragraph (c) of this section.

(2) Effective December 31, 2009, the air velocity in the belt entry must be at least 50 feet per minute. When requested by the mine operator, the district manager may approve lower velocities in the ventilation plan based on specific mine conditions. Air velocities must be compatible with all fire detection systems and fire suppression systems used in the belt entry.

(b) The use of air from a belt air course to ventilate a working section, or an area where mechanized mining equipment is being installed or removed, shall be permitted only when evaluated and approved by the district manager in the mine ventilation plan. The mine operator must provide justification in the plan that the use of air from a belt entry would afford at least the same measure of protection as where belt haulage entries are not used to ventilate working places. In addition, the following requirements must be met:

(1) The belt entry must be equipped with an AMS that is installed, operated, examined, and maintained as specified in § 75.351.

(2) All miners must be trained annually in the basic operating principles of the AMS, including the actions required in the event of activation of any AMS alert or alarm signal. This training must be conducted prior to working underground in a mine that uses belt air to ventilate working sections or areas where mechanized mining equipment is installed or removed. It must be conducted as part of a miner's 30 CFR part 48 new miner training (§ 48.5), experienced miner training (§ 48.6), or annual refresher training (§ 48.8).

(3)(i) The average concentration of respirable dust in the belt air course,

when used as a section intake air course, must be maintained at or below 1.0 mg/m^3.

(ii) Where miners on the working section are on a reduced standard below 1.0 mg/m^3, the average concentration of respirable dust in the belt entry must be at or below the lowest applicable respirable dust standard on that section.

(iii) A permanent designated area (DA) for dust measurements must be established at a point no greater than 50 feet upwind from the section loading point in the belt entry when the belt air flows over the loading point or no greater than 50 feet upwind from the point where belt air is mixed with air from another intake air course near the loading point. The DA must be specified and approved in the ventilation plan.

(4) The primary escapeway must be monitored for carbon monoxide or smoke as specified in § 75.351(f).

(5) The area of the mine with a belt air course must be developed with three or more entries.

(6) In areas of the mine developed after the effective date of this rule, unless approved by the district manager, no more than 50% of the total intake air, delivered to the working section or to areas where mechanized mining equipment is being installed or removed, can be supplied from the belt air course. The locations for measuring these air quantities must be approved in the mine ventilation plan.

(7) The air velocity in the belt entry must be at least 100 feet per minute. When requested by the mine operator, the district manager may approve lower velocities in the ventilation plan based on specific mine conditions.

(8) The air velocity in the belt entry must not exceed 1,000 feet per minute. When requested by the mine operator, the district manager may approve higher velocities in the ventilation plan based on specific mine conditions.

(c) Notwithstanding the provisions of § 75.380(g), additional intake air may be added to the belt air course through a point-feed regulator. The location and use of point feeds must be approved in the mine ventilation plan.

(d) If the air through the point-feed regulator enters a belt air course which is used to ventilate a working section or an area where mechanized mining equipment is being installed or removed, the following conditions must be met:

(1) The air current that will pass through the point-feed regulator must be monitored for carbon monoxide or smoke at a point within 50 feet upwind of the point-feed regulator. A second point must be monitored 1,000 feet upwind of the point-feed regulator unless the mine operator requests that a lesser distance be approved by the district manager in the mine ventilation plan based on mine specific conditions;

(2) The air in the belt air course must be monitored for carbon monoxide or smoke upwind of the point-feed regulator. This sensor must be in the belt air course within 50 feet of the mixing point where air flowing through the point-feed regulator mixes with the belt air;

(3) The point-feed regulator must be provided with a means to close the regulator from the intake air course without requiring a person to enter the crosscut where the point-feed regulator is located. The point-feed regulator must also be provided with a means to close the regulator from a location in the belt air course immediately upwind of the crosscut containing the point-feed regulator;

(4) A minimum air velocity of 300 feet per minute must be maintained through the point-feed regulator;

(5) The location(s) and use of a point-feed regulator(s) must be approved in the mine ventilation plan and shown on the mine ventilation map; and

(6) An AMS must be installed, operated, examined, and maintained as specified in § 75.351.

[69 FR 17526, Apr. 2, 2004, as amended at 70 FR 37266, June 29, 2005; 71 FR 12269, Mar. 9, 2006; 73 FR 80612, Dec. 31, 2008]

EFFECTIVE DATE NOTE: At 79 FR 24987, May 1, 2014, § 75.350 was amended by revising paragraph (b)(3)(i) and (ii), effective Aug. 1, 2014. For the convenience of the user, the revised text is set forth as follows:

§ 75.350 Belt air course ventilation.

* * * * *

(b) * * *

(3)(i) The average concentration of respirable dust in the belt air course, when used as a section intake air course, shall be maintained at or below:

(A) 1.0 mg/m^3.

(B) 0.5 mg/m^3 as of August 1, 2016.

(ii) Where miners on the working section are on a reduced standard below that specified in § 75.350(b)(3)(i), the average concentration of respirable dust in the belt entry must be at or below the lowest applicable standard on that section.

* * * * *

§ 75.351 Atmospheric monitoring systems.

(a) *AMS operation.* Whenever personnel are underground and an AMS is used to fulfill the requirements of §§ 75.323(d)(1)(ii), 75.340(a)(1)(ii), 75.340(a)(2)(ii), 75.350(b), 75.350(d), or 75.362(f), the AMS must be operating and a designated AMS operator must be on duty at a location on the surface of the mine where audible and visual signals from the AMS must be seen or heard and the AMS operator can promptly respond to these signals.

(b) *Designated surface location and AMS operator.* When an AMS is used to comply with §§ 75.323(d)(1)(ii), 75.340(a)(1)(ii), 75.340(a)(2)(ii), 75.350(b), 75.350(d), or 75.362(f), the following requirements apply:

(1) The mine operator must designate a surface location at the mine where signals from the AMS will be received and two-way voice communication is maintained with each working section, with areas where mechanized mining equipment is being installed or removed, and with other areas designated in the approved emergency evacuation and firefighting program of instruction (§ 75.1502).

(2) The mine operator must designate an AMS operator to monitor and promptly respond to all AMS signals. The AMS operator must have as a primary duty the responsibility to monitor the malfunction, alert and alarm signals of the AMS, and to notify appropriate personnel of these signals. In the event of an emergency, the sole responsibility of the AMS operator shall be to respond to the emergency.

(3) A map or schematic must be provided at the designated surface location that shows the locations and type of AMS sensor at each location, and the intended air flow direction at these locations. This map or schematic must be updated within 24 hours of any change in this information.

(4) The names of the designated AMS operators and other appropriate personnel, including the designated person responsible for initiating an emergency mine evacuation under § 75.1501, and the method to contact these persons, must be provided at the designated surface location.

(c) *Minimum operating requirements.* AMSs used to comply with §§ 75.323(d)(1)(ii), 75.340(a)(1)(ii), 75.340(a)(2)(ii), 75.350(b), 75.350(d), or 75.362(f) must:

(1) Automatically provide visual and audible signals at the designated surface location for any interruption of circuit continuity and any electrical malfunction of the system. These signals must be of sufficient magnitude to be seen or heard by the AMS operator.

(2) Automatically provide visual and audible signals at the designated surface location when the carbon monoxide concentration or methane concentration at any sensor reaches the alert level as specified in § 75.351(i). These signals must be of sufficient magnitude to be seen or heard by the AMS operator.

(3) Automatically provide visual and audible signals at the designated surface location distinguishable from alert signals when the carbon monoxide, smoke, or methane concentration at any sensor reaches the alarm level as specified in § 75.351(i). These signals must be of sufficient magnitude to be seen or heard by the AMS operator.

(4) Automatically provide visual and audible signals at all affected working sections and at all affected areas where mechanized mining equipment is being installed or removed when the carbon monoxide, smoke, or methane concentration at any sensor reaches the alarm level as specified in § 75.351(i). These signals must be of sufficient magnitude to be seen or heard by miners working at these locations. Methane signals must be distinguishable from other signals.

(5) Automatically provide visual and audible signals at other locations as

specified in Mine Emergency Evacuation and Firefighting Program of Instruction (§ 75.1502) when the carbon monoxide, smoke, or methane concentration at any sensor reaches the alarm level as specified in § 75.351(i). These signals must be seen or heard by miners working at these locations. Methane alarms must be distinguishable from other signals.

(6) Identify at the designated surface location the operational status of all sensors.

(7) Automatically provide visual and audible alarm signals at the designated surface location, at all affected working sections, and at all affected areas where mechanized mining equipment is being installed or removed when the carbon monoxide level at any two consecutive sensors alert at the same time. These signals must be seen or heard by the AMS operator and miners working at these locations.

(d) *Location and installation of AMS sensors.* (1) All AMS sensors, as specified in §§ 75.351(e) through 75.351(h), must be located such that measurements are representative of the mine atmosphere in these locations.

(2) Carbon monoxide or smoke sensors must be installed near the center in the upper third of the entry, in a location that does not expose personnel working on the system to unsafe conditions. Sensors must not be located in abnormally high areas or in other locations where air flow patterns do not permit products of combustion to be carried to the sensors.

(3) Methane sensors must be installed near the center of the entry, at least 12 inches from the roof, ribs, and floor, in a location that would not expose personnel working on the system to unsafe conditions.

(e) *Location of sensors-belt air course.* (1) In addition to the requirements of paragraph (d) of this section, any AMS used to monitor belt air courses under § 75.350(b) must have approved sensors to monitor for carbon monoxide at the following locations:

(i) At or near the working section belt tailpiece in the air stream ventilating the belt entry. In longwall mining systems the sensor must be located upwind in the belt entry at a distance no greater than 150 feet from the mixing point where intake air is mixed with the belt air at or near the tailpiece;

(ii) No more than 50 feet upwind from the point where the belt air course is combined with another air course or splits into multiple air courses;

(iii) At intervals not to exceed 1,000 feet along each belt entry. However, in areas along each belt entry where air velocities are between 50 and 100 feet per minute, spacing of sensors must not exceed 500 feet. In areas along each belt entry where air velocities are less than 50 feet per minute, the sensor spacing must not exceed 350 feet;

(iv) Not more than 100 feet downwind of each belt drive unit, each tailpiece, transfer point, and each belt take-up. If the belt drive, tailpiece, and/or take-up for a single transfer point are installed together in the same air course, and the distance between the units is less than 100 feet, they may be monitored with one sensor downwind of the last component. If the distance between the units exceeds 100 feet, additional sensors are required downwind of each belt drive unit, each tailpiece, transfer point, and each belt take-up; and

(v) At other locations in any entry that is part of the belt air course as required and specified in the mine ventilation plan.

(2) Smoke sensors must be installed to monitor the belt entry under § 75.350(b) at the following locations:

(i) At or near the working section belt tailpiece in the air stream ventilating the belt entry. In longwall mining systems the sensor must be located upwind in the belt entry at a distance no greater than 150 feet from the mixing point where intake air is mixed with the belt air at or near the tailpiece;

(ii) Not more than 100 feet downwind of each belt drive unit, each tailpiece transfer point, and each belt take-up. If the belt drive, tailpiece, and/or take-up for a single transfer point are installed together in the same air course, and the distance between the units is less than 100 feet, they may be monitored with one sensor downwind of the last component. If the distance between the units exceeds 100 feet, additional sensors are required downwind of each belt

drive unit, each tailpiece, transfer point, and each belt take-up; and

(iii) At intervals not to exceed 3,000 feet along each belt entry.

(iv) This provision shall be effective one year after the Secretary has determined that a smoke sensor is available to reliably detect fire in underground coal mines.

(f) *Locations of sensors—the primary escapeway.* When used to monitor the primary escapeway under § 75.350(b)(4), carbon monoxide or smoke sensors must be located in the primary escapeway within 500 feet of the working section and areas where mechanized mining equipment is being installed or removed. In addition, another sensor must be located within 500 feet inby the beginning of the panel. The point-feed sensor required by § 75.350(d)(1) may be used as the sensor at the beginning of the panel if it is located within 500 feet inby the beginning of the panel.

(g) *Location of sensors—return air splits.* (1) If used to monitor return air splits under § 75.362(f), a methane sensor must be installed in the return air split between the last working place, longwall or shortwall face ventilated by that air split, and the junction of the return air split with another air split, seal, or worked out area.

(2) If used to monitor a return air split under § 75.323(d)(1)(ii), the methane sensors must be installed at the following locations:

(i) In the return air course opposite the section loading point, or, if exhausting auxiliary fan(s) are used, in the return air course no closer than 300 feet downwind from the fan exhaust and at a point opposite or immediately outby the section loading point; and

(ii) Immediately upwind from the location where the return air split meets another air split or immediately upwind of the location where an air split is used to ventilate seals or worked-out areas.

(h) *Location of sensors—electrical installations.* When monitoring the intake air ventilating underground transformer stations, battery charging stations, substations, rectifiers, or water pumps under § 75.340(a)(1)(ii) or § 75.340(a)(2)(ii), at least one sensor must be installed to monitor the mine atmosphere for carbon monoxide or smoke, located downwind and not greater than 50 feet from the electrical installation being monitored.

(i) *Establishing alert and alarm levels.* An AMS installed in accordance with the following paragraphs must initiate alert and alarm signals at the specified levels, as indicated:

(1) For § 75.323(d)(1)(ii) alarm at 1.5% methane.

(2) For §§ 75.340(a)(1)(ii), 75.340(a)(2)(ii), 75.350(b), and 75.350(d), alert at 5 ppm carbon monoxide above the ambient level and alarm at 10 ppm carbon monoxide above the ambient level when carbon monoxide sensors are used; and alarm at a smoke optical density of 0.022 per meter when smoke sensors are used. Reduced alert and alarm settings approved by the district manager may be required for carbon monoxide sensors identified in the mine ventilation plan, § 75.371(nn).

(3) For § 75.362(f), alert at 1.0% methane and alarm at 1.5% methane.

(j) *Establishing carbon monoxide ambient levels.* Carbon monoxide ambient levels and the means to determine these levels must be approved in the mine ventilation plan (§ 75.371(hh)) for monitors installed in accordance with §§ 75.340(a)(1)(ii), 75.340(a)(2)(ii), 75.350(b), and 75.350(d).

(k) *Installation and maintenance.* An AMS installed in accordance with §§ 75.323(d)(1)(ii), 75.340(a)(1)(ii), 75.340(a)(2)(ii), 75.350(b), 75.350(d), or 75.362(f) must be installed and maintained by personnel trained in the installation and maintenance of the system. The system must be maintained in proper operating condition.

(l) *Sensors.* Sensors used to monitor for carbon monoxide, methane, and smoke must be either of a type listed and installed in accordance with the recommendations of a nationally recognized testing laboratory approved by the Secretary; or these sensors must be of a type, and installed in a manner, approved by the Secretary.

(m) *Time delays.* When a demonstrated need exists, time delays may be incorporated into the AMS. These time delays must only be used to account for non-fire related carbon monoxide alert and alarm sensor signals. These time delays are limited to no

more than three minutes. The use and length of any time delays, or other techniques or methods which eliminate or reduce the need for time delays, must be specified and approved in the mine ventilation plan.

(n) *Examination, testing, and calibration.* (1) At least once each shift when belts are operated as part of a production shift, sensors used to detect carbon monoxide or smoke in accordance with §§ 75.350(b), and 75.350(d), and alarms installed in accordance with § 75.350(b) must be visually examined.

(2) At least once every seven days, alarms for AMS installed in accordance with §§ 75.350(b), and 75.350(d) must be functionally tested for proper operation.

(3) At intervals not to exceed 31 days—

(i) Each carbon monoxide sensor installed in accordance with §§ 75.340(a)(1)(ii), 75.340(a)(2)(ii), 75.350(b), or 75.350(d) must be calibrated in accordance with the manufacturer's calibration specifications. Calibration must be done with a known concentration of carbon monoxide in air sufficient to activate the alarm;

(ii) Each smoke sensor installed in accordance with §§ 75.340(a)(1)(ii), 75.340(a)(2)(ii), 75.350(b), or 75.350(d) must be functionally tested in accordance with the manufacturer's calibration specifications;

(iii) Each methane sensor installed in accordance with §§ 75.323(d)(1)(ii) or 75.362(f) must be calibrated in accordance with the manufacturer's calibration specifications. Calibration must be done with a known concentration of methane in air sufficient to activate an alarm.

(iv) If the alert or alarm signals will be activated during calibration of sensors, the AMS operator must be notified prior to and upon completion of calibration. The AMS operator must notify miners on affected working sections, areas where mechanized mining equipment is being installed or removed, or other areas designated in the approved emergency evacuation and firefighting program of instruction (§ 75.1502) when calibration will activate alarms and when calibration is completed.

(4) Gases used for the testing and calibration of AMS sensors must be traceable to the National Institute of Standards and Technology reference standard for the specific gas. When these reference standards are not available for a specific gas, calibration gases must be traceable to an analytical standard which is prepared using a method traceable to the National Institute of Standards and Technology. Calibration gases must be within ±2.0 percent of the indicated gas concentration.

(o) *Recordkeeping.* (1) When an AMS is used to comply with §§ 75.323(d)(1)(ii), 75.340(a)(1)(ii), 75.340(a)(2)(ii), 75.350(b), 75.350(d), or 75.362(f), individuals designated by the operator must make the following records by the end of the shift in which the following event(s) occur:

(i) If an alert or alarm signal occurs, a record of the date, time, location and type of sensor, and the cause for the activation.

(ii) If an AMS malfunctions, a record of the date, the extent and cause of the malfunction, and the corrective action taken to return the system to proper operation.

(iii) A record of the seven-day tests of alert and alarm signals; calibrations; and maintenance of the AMS must be made by the person(s) performing these actions.

(2) The person entering the record must include their name, date, and signature in the record.

(3) The records required by this section must be kept either in a secure book that is not susceptible to alteration, or electronically in a computer system that is secure and not susceptible to alteration. These records must be maintained separately from other records and identifiable by a title, such as the 'AMS log.'

(p) *Retention period.* Records must be retained for at least one year at a surface location at the mine and made available for inspection by miners and authorized representatives of the Secretary.

(q) *Training.* (1) All AMS operators must be trained annually in the proper operation of the AMS. This training must include the following subjects:

(i) Familiarity with underground mining systems;

(ii) Basic atmospheric monitoring system requirements;

(iii) The mine emergency evacuation and firefighting program of instruction;

(iv) The mine ventilation system including planned air directions;

(v) Appropriate response to alert, alarm and malfunction signals;

(vi) Use of mine communication systems including emergency notification procedures; and

(vii) AMS recordkeeping requirements.

(2) At least once every six months, all AMS operators must travel to all working sections.

(3) A record of the content of training, the person conducting the training, and the date the training was conducted, must be maintained at the mine for at least one year by the mine operator.

(r) *Communications*. When an AMS is used to comply with § 75.350(b), a two-way voice communication system required by § 75.1600 must be installed in an entry that is separate from the entry in which the AMS is installed no later than August 2, 2004. The two-way voice communication system may be installed in the entry where the intake sensors required by §§ 75.350(b)(4) or 75.350(d)(1) are installed.

[69 FR 17527, Apr. 2, 2004, as amended at 73 FR 80612, Dec. 31, 2008]

§ 75.352 Actions in response to AMS malfunction, alert, or alarm signals.

(a) When a malfunction, alert, or alarm signal is received at the designated surface location, the sensor(s) that are activated must be identified and the AMS operator must promptly notify appropriate personnel.

(b) Upon notification of a malfunction, alert, or alarm signal, appropriate personnel must promptly initiate an investigation to determine the cause of the signal and take the required actions set forth in paragraphs (c), (d), or (e) of this section.

(c) If any sensor installed in accordance with §§ 75.340(a)(1)(ii), 75.340(a)(2)(ii), 75.350(b), or 75.350(d) indicates an alarm or if any two consecutive sensors indicate alert at the same time, the following procedures must be followed unless the cause of the signal(s) is known not to be a hazard to miners:

(1) Appropriate personnel must notify miners in affected working sections, in affected areas where mechanized mining equipment is being installed or removed, and at other locations specified in the § 75.1502 approved mine emergency evacuation and firefighting program of instruction; and

(2) All personnel in the affected areas, unless assigned other duties under § 75.1502, must be withdrawn promptly to a safe location identified in the mine emergency evacuation and firefighting program of instruction.

(d) If there is an alert or alarm signal from a methane sensor installed in accordance with §§ 75.323(d)(1)(ii) and 75.362(f), an investigation must be initiated to determine the cause of the signal, and the actions required under § 75.323 must be taken.

(e) If any fire detection components of the AMS malfunction or are inoperative, immediate action must be taken to return the system to proper operation. While the AMS component repairs are being made, operation of the belt may continue if the following conditions are met:

(1) If one AMS sensor malfunctions or becomes inoperative, a trained person must continuously monitor for carbon monoxide or smoke at the inoperative sensor.

(2) If two or more adjacent AMS sensors malfunction or become inoperative, a trained person(s) must patrol and continuously monitor for carbon monoxide or smoke so that the affected areas will be traveled each hour in their entirety, or a trained person must be stationed to monitor at each inoperative sensor.

(3) If the complete AMS malfunctions or becomes inoperative, trained persons must patrol and continuously monitor for carbon monoxide or smoke so that the affected areas will be traveled each hour in their entirety.

(4) The trained person(s) monitoring under this section must, at a minimum, have two-way voice communication capabilities with the AMS operator at intervals not to exceed 2,000 feet and report contaminant levels to

the AMS operator at intervals not to exceed 60 minutes.

(5) The trained person(s) monitoring under this section must report immediately to the AMS operator any concentration of the contaminant that reaches either the alert or alarm level specified in § 75.351(i), or the alternate alert and alarm levels specified in paragraph (e)(7) of this section, unless the source of the contaminant is known not to present a hazard.

(6) Detectors used to monitor under this section must have a level of detectability equal to that required of the sensors in § 75.351(l).

(7) For those AMSs using sensors other than carbon monoxide sensors, an alternate detector and the alert and alarm levels associated with that detector must be specified in the approved mine ventilation plan.

(f) If the minimum air velocity is not maintained when required under § 75.350(b)(7), immediate action must be taken to return the ventilation system to proper operation. While the ventilation system is being corrected, operation of the belt may continue only while a trained person(s) patrols and continuously monitors for carbon monoxide or smoke as set forth in §§ 75.352(e)(3) through (7), so that the affected areas will be traveled each hour in their entirety.

(g) The AMS shall automatically provide both a visual and audible signal in the belt entry at the point-feed regulator location, at affected sections, and at the designated surface location when carbon monoxide concentrations reach:

(1) The alert level at both point-feed intake monitoring sensors; or

(2) The alarm level at either point-feed intake monitoring sensor.

[69 FR 17529, Apr. 2, 2004, as amended at 73 FR 80613, Dec. 31, 2008]

§ 75.360 Preshift examination at fixed intervals.

(a)(1) Except as provided in paragraph (a)(2) of this section, a certified person designated by the operator must make a preshift examination within 3 hours preceding the beginning of any 8-hour interval during which any person is scheduled to work or travel underground. No person other than certified examiners may enter or remain in any underground area unless a preshift examination has been completed for the established 8-hour interval. The operator must establish 8-hour intervals of time subject to the required preshift examinations.

(2) Preshift examinations of areas where pumpers are scheduled to work or travel shall not be required prior to the pumper entering the areas if the pumper is a certified person and the pumper conducts an examination for hazardous conditions and violations of the mandatory health or safety standards referenced in paragraph (b)(11) of this section, tests for methane and oxygen deficiency, and determines if the air is moving in its proper direction in the area where the pumper works or travels. The examination of the area must be completed before the pumper performs any other work. A record of all hazardous conditions and violations of the mandatory health or safety standards found by the pumper shall be made and retained in accordance with § 75.363 of this part.

(b) The person conducting the preshift examination shall examine for hazardous conditions and violations of the mandatory health or safety standards referenced in paragraph (b)(11) of this section, test for methane and oxygen deficiency, and determine if the air is moving in its proper direction at the following locations:

(1) Roadways, travelways and track haulageways where persons are scheduled, prior to the beginning of the preshift examination, to work or travel during the oncoming shift.

(2) Belt conveyors that will be used to transport persons during the oncoming shift and the entries in which these belt conveyors are located.

(3) Working sections and areas where mechanized mining equipment is being installed or removed, if anyone is scheduled to work on the section or in the area during the oncoming shift. The scope of the examination shall include the working places, approaches to worked-out areas and ventilation controls on these sections and in these areas, and the examination shall include tests of the roof, face and rib conditions on these sections and in these areas.

(4) Approaches to worked-out areas along intake air courses and at the entries used to carry air into worked-out areas if the intake air passing the approaches is used to ventilate working sections where anyone is scheduled to work during the oncoming shift. The examination of the approaches to the worked-out areas shall be made in the intake air course immediately inby and outby each entry used to carry air into the worked-out area. An examination of the entries used to carry air into the worked-out areas shall be conducted at a point immediately inby the intersection of each entry with the intake air course.

(5) Seals along intake air courses where intake air passes by a seal to ventilate working sections where anyone is scheduled to work during the oncoming shift.

(6)(i) Entries and rooms developed after November 15, 1992, and developed more than 2 crosscuts off an intake air course without permanent ventilation controls where intake air passes through or by these entries or rooms to reach a working section where anyone is scheduled to work during the oncoming shift; and,

(ii) Entries and rooms developed after November 15, 1992, and driven more than 20 feet off an intake air course without a crosscut and without permanent ventilation controls where intake air passes through or by these entries or rooms to reach a working section where anyone is scheduled to work during the oncoming shift.

(7) Areas where trolley wires or trolley feeder wires are to be or will remain energized during the oncoming shift.

(8) High spots along intake air courses where methane is likely to accumulate, if equipment will be operated in the area during the shift.

(9) Underground electrical installations referred to in § 75.340(a), except those pumps listed in § 75.340 (b)(2) through (b)(6), and areas where compressors subject to § 75.344 are installed if the electrical installation or compressor is or will be energized during the shift.

(10) Other areas where work or travel during the oncoming shift is scheduled prior to the beginning of the preshift examination.

(11) Preshift examinations shall include examinations to identify violations of the standards listed below:

(i) §§ 75.202(a) and 75.220(a)(1)—roof control;

(ii) §§ 75.333(h) and 75.370(a)(1)—ventilation, methane;

(iii) §§ 75.400 and 75.403—accumulations of combustible materials and application of rock dust;

(iv) § 75.1403—other safeguards, limited to maintenance of travelways along belt conveyors, off track haulage roadways, and track haulage, track switches, and other components for haulage;

(v) § 75.1722(a)—guarding moving machine parts; and

(vi) § 75.1731(a)—maintenance of belt conveyor components.

(c) The person conducting the preshift examination shall determine the volume of air entering each of the following areas if anyone is scheduled to work in the areas during the oncoming shift:

(1) In the last open crosscut of each set of entries or rooms on each working section and areas where mechanized mining equipment is being installed or removed. The last open crosscut is the crosscut in the line of pillars containing the permanent stoppings that separate the intake air courses and the return air courses.

(2) On each longwall or shortwall in the intake entry or entries at the intake end of the longwall or shortwall face immediately outby the face and the velocity of air at each end of the face at the locations specified in the approved ventilation plan.

(3) At the intake end of any pillar line—

(i) If a single split of air is used, in the intake entry furthest from the return air course, immediately outby the first open crosscut outby the line of pillars being mined; or

(ii) If a split system is used, in the intake entries of each split immediately inby the split point.

(d) The person conducting the preshift examination shall check the refuge alternative for damage, the integrity of the tamper-evident seal and the mechanisms required to deploy the

refuge alternative, and the ready availability of compressed oxygen and air.

(e) The district manager may require the operator to examine other areas of the mine or examine for other hazards and violations of other mandatory health or safety standards found during the preshift examination.

(f) *Certification.* At each working place examined, the person doing the preshift examination shall certify by initials, date, and the time, that the examination was made. In areas required to be examined outby a working section, the certified person shall certify by initials, date, and the time at enough locations to show that the entire area has been examined.

(g) *Recordkeeping.* A record of the results of each preshift examination, including a record of hazardous conditions and violations of the nine mandatory health or safety standards and their locations found by the examiner during each examination, and of the results and locations of air and methane measurements, shall be made on the surface before any persons, other than certified persons conducting examinations required by this subpart, enter any underground area of the mine. The results of methane tests shall be recorded as the percentage of methane measured by the examiner. The record shall be made by the certified person who made the examination or by a person designated by the operator. If the record is made by someone other than the examiner, the examiner shall verify the record by initials and date by or at the end of the shift for which the examination was made. A record shall also be made by a certified person of the action taken to correct hazardous conditions and violations of mandatory health or safety standards found during the preshift examination. All preshift and corrective action records shall be countersigned by the mine foreman or equivalent mine official by the end of the mine foreman's or equivalent mine official's next regularly scheduled working shift. The records required by this section shall be made in a secure book that is not susceptible to alteration or electronically in a computer system so as to be secure and not susceptible to alteration.

(h) *Retention period.* Records shall be retained at a surface location at the mine for at least 1 year and shall be made available for inspection by authorized representatives of the Secretary and the representative of miners.

[61 FR 9829, Mar. 11, 1996, as amended at 61 FR 55527, Oct. 25, 1996; 62 FR 35085, June 30, 1997; 64 FR 45170, Aug. 19, 1999; 73 FR 80697, Dec. 31, 2008; 77 FR 20714, Apr. 6, 2012]

§ 75.361 Supplemental examination.

(a)(1) Except for certified persons conducting examinations required by this subpart, within 3 hours before anyone enters an area in which a preshift examination has not been made for that shift, a certified person shall examine the area for hazardous conditions and violations of the mandatory health or safety standards referenced in paragraph (a)(2) of this section, determine whether the air is traveling in its proper direction and at its normal volume, and test for methane and oxygen deficiency.

(2) Supplemental examinations shall include examinations to identify violations of the standards listed below:

(i) §§ 75.202(a) and 75.220(a)(1)—roof control;

(ii) §§ 75.333(h) and 75.370(a)(1)—ventilation, methane;

(iii) §§ 75.400 and 75.403—accumulations of combustible materials and application of rock dust;

(iv) § 75.1403—other safeguards, limited to maintenance of travelways along belt conveyors, off track haulage roadways, and track haulage, track switches, and other components for haulage;

(v) § 75.1722(a)—guarding moving machine parts; and

(vi) § 75.1731(a)—maintenance of belt conveyor components.

(b) *Certification.* At each working place examined, the person making the supplemental examination shall certify by initials, date, and the time, that the examination was made. In areas required to be examined outby a working section, the certified person shall certify by initials, date, and the time at enough locations to show that the entire area has been examined.

[61 FR 9829, Mar. 11, 1996, as amended at 77 FR 20714, 2012]

§ 75.362 On-shift examination.

(a)(1) At least once during each shift, or more often if necessary for safety, a certified person designated by the operator shall conduct an on-shift examination of each section where anyone is assigned to work during the shift and any area where mechanized mining equipment is being installed or removed during the shift. The certified person shall check for hazardous conditions and violations of the mandatory health or safety standards referenced in paragraph (a)(3) of this section, test for methane and oxygen deficiency, and determine if the air is moving in its proper direction.

(2) A person designated by the operator shall conduct an examination to assure compliance with the respirable dust control parameters specified in the mine ventilation plan. In those instances when a shift change is accomplished without an interruption in production on a section, the examination shall be made anytime within 1 hour of the shift change. In those instances when there is an interruption in production during the shift change, the examination shall be made before production begins on a section. Deficiencies in dust controls shall be corrected before production begins or resumes. The examination shall include air quantities and velocities, water pressures and flow rates, excessive leakage in the water delivery system, water spray numbers and orientations, section ventilation and control device placement, and any other dust suppression measures required by the ventilation plan. Measurements of the air velocity and quantity, water pressure and flow rates are not required if continuous monitoring of these controls is used and indicates that the dust controls are functioning properly.

(3) On-shift examinations shall include examinations to identify violations of the standards listed below:

(i) §§ 75.202(a) and 75.220(a)(1)—roof control;

(ii) §§ 75.333(h) and 75.370(a)(1)—ventilation, methane;

(iii) §§ 75.400 and 75.403—accumulations of combustible materials and application of rock dust;

(iv) § 75.1403—other safeguards, limited to maintenance of travelways along belt conveyors, off track haulage roadways, and track haulage, track switches, and other components for haulage;

(v) § 75.1722(a)—guarding moving machine parts; and

(vi) § 75.1731(a)—maintenance of belt conveyor components.

(b) During each shift that coal is produced, a certified person shall examine for hazardous conditions and violations of the mandatory health or safety standards referenced in paragraph (a)(3) of this section along each belt conveyor haulageway where a belt conveyor is operated. This examination may be conducted at the same time as the preshift examination of belt conveyors and belt conveyor haulageways, if the examination is conducted within 3 hours before the oncoming shift.

(c) Persons conducting the on-shift examination shall determine at the following locations:

(1) The volume of air in the last open crosscut of each set of entries or rooms on each section and areas where mechanized mining equipment is being installed or removed. The last open crosscut is the crosscut in the line of pillars containing the permanent stoppings that separate the intake air courses and the return air courses.

(2) The volume of air on a longwall or shortwall, including areas where longwall or shortwall equipment is being installed or removed, in the intake entry or entries at the intake end of the longwall or shortwall.

(3) The velocity of air at each end of the longwall or shortwall face at the locations specified in the approved ventilation plan.

(4) The volume of air at the intake end of any pillar line—

(i) Where a single split of air is used in the intake entry furthest from the return air course immediately outby the first open crosscut outby the line of pillars being mined; or

(ii) Where a split system is used in the intake entries of each split immediately inby the split point.

(d) (1) A qualified person shall make tests for methane—

(i) At the start of each shift at each working place before electrically operated equipment is energized; and

(ii) Immediately before equipment is energized, taken into, or operated in a working place; and

(iii) At 20-minute intervals, or more often if required in the approved ventilation plan at specific locations, during the operation of equipment in the working place.

(2) Except as provided for in paragraph (d)(3) of this section, these methane tests shall be made at the face from under permanent roof support, using extendable probes or other acceptable means. When longwall or shortwall mining systems are used, these methane tests shall be made at the shearer, the plow, or the cutting head. When mining has been stopped for more than 20 minutes, methane tests shall be conducted prior to the start up of equipment.

(3) As an alternative method of compliance with paragraph (d)(2) of this section during roof bolting, methane tests may be made by sweeping an area not less than 16 feet inby the last area of permanently supported roof, using a probe or other acceptable means. This method of testing is conditioned on meeting the following requirements:

(i) The roof bolting machine must be equipped with an integral automated temporary roof support (ATRS) system that meets the requirements of 30 CFR 75.209.

(ii) The roof bolting machine must have a permanently mounted, MSHA-approved methane monitor which meets the maintenance and calibration requirements of 30 CFR 75.342(a)(4), the warning signal requirements of 30 CFR 75.342(b), and the automatic de-energization requirements of 30 CFR 75.342(c).

(iii) The methane monitor sensor must be mounted near the inby end and within 18 inches of the longitudinal center of the ATRS support, and positioned at least 12 inches from the roof when the ATRS is fully deployed.

(iv) Manual methane tests must be made at intervals not exceeding 20 minutes. The test may be made either from under permanent roof support or from the roof bolter's work position protected by the deployed ATRS.

(v) Once a methane test is made at the face, all subsequent methane tests in the same area of unsupported roof must also be made at the face, from under permanent roof support, using extendable probes or other acceptable means at intervals not exceeding 20 minutes.

(vi) The district manager may require that the ventilation plan include the minimum air quantity and the position and placement of ventilation controls to be maintained during roof bolting.

(e) If auxiliary fans and tubing are used, they shall be inspected frequently.

(f) During each shift that coal is produced and at intervals not exceeding 4 hours, tests for methane shall be made by a certified person or by an atmospheric monitoring system (AMS) in each return split of air from each working section between the last working place, or longwall or shortwall face, ventilated by that split of air and the junction of the return air split with another air split, seal, or worked-out area. If auxiliary fans and tubing are used, the tests shall be made at a location outby the auxiliary fan discharge.

(g) *Certification.* (1) The person conducting the on-shift examination in belt haulage entries shall certify by initials, date, and time that the examination was made. The certified person shall certify by initials, date, and the time at enough locations to show that the entire area has been examined.

(2) The certified person directing the on-shift examination to assure compliance with the respirable dust control parameters specified in the mine ventilation plan shall certify by initials, date, and time that the examination was made.

[61 FR 9829, Mar. 11, 1996; 61 FR 26442, May 28, 1996, as amended at 68 FR 40138, July 7, 2003; 77 FR 20715, Apr. 6, 2012]

EFFECTIVE DATE NOTE: At 79 FR 24987, May 1, 2014, § 75.362 was amended by revising paragraphs (a)(2) and (g)(2) and adding paragraphs (g)(3) and (g)(4), effective Aug. 1, 2014. For the convenience of the user, the added and revised text is set forth as follows:

§ 75.362 On-shift examinations.

(a)(1) * * *

(2) A person designated by the operator shall conduct an examination and record the results and the corrective actions taken to assure compliance with the respirable dust control parameters specified in the approved

mine ventilation plan. In those instances when a shift change is accomplished without an interruption in production on a section, the examination shall be made anytime within 1 hour after the shift change. In those instances when there is an interruption in production during the shift change, the examination shall be made before production begins on a section. Deficiencies in dust controls shall be corrected before production begins or resumes. The examination shall include: Air quantities and velocities; water pressures and flow rates; excessive leakage in the water delivery system; water spray numbers and orientations; section ventilation and control device placement; roof bolting machine dust collector vacuum levels; scrubber air flow rate; work practices required by the ventilation plan; and any other dust suppression measures. Measurements of the air velocity and quantity, water pressure and flow rates are not required if continuous monitoring of these controls is used and indicates that the dust controls are functioning properly.

* * * * *

(g) * * *

(2) The certified person directing the on-shift examination to assure compliance with the respirable dust control parameters specified in the approved mine ventilation plan shall:

(i) Certify by initials, date, and time on a board maintained at the section load-out or similar location showing that the examination was made prior to resuming production; and

(ii) Verify, by initials and date, the record of the results of the examination required under (a)(2) of this section to assure compliance with the respirable dust control parameters specified in the mine ventilation plan. The verification shall be made no later than the end of the shift for which the examination was made.

(3) The mine foreman or equivalent mine official shall countersign each examination record required under (a)(2) of this section after it is verified by the certified person under (g)(2)(ii) of this section, and no later than the end of the mine foreman's or equivalent mine official's next regularly scheduled working shift. The record shall be made in a secure book that is not susceptible to alteration or electronically in a computer system so as to be secure and not susceptible to alteration.

(4) Records shall be retained at a surface location at the mine for at least 1 year and shall be made available for inspection by authorized representatives of the Secretary and the representative of miners.

§ 75.363 Hazardous conditions and violations of mandatory health or safety standards; posting, correcting, and recording.

(a) Any hazardous condition found by the mine foreman or equivalent mine official, assistant mine foreman or equivalent mine official, or other certified persons designated by the operator for the purposes of conducting examinations under this subpart D, shall be posted with a conspicuous danger sign where anyone entering the areas would pass. A hazardous condition shall be corrected immediately or the area shall remain posted until the hazardous condition is corrected. If the condition creates an imminent danger, everyone except those persons referred to in section 104(c) of the Act shall be withdrawn from the area affected to a safe area until the hazardous condition is corrected. Only persons designated by the operator to correct or evaluate the hazardous condition may enter the posted area. Any violation of a mandatory health or safety standard found during a preshift, supplemental, on-shift, or weekly examination shall be corrected.

(b) A record shall be made of any hazardous condition and any violation of the nine mandatory health or safety standards found by the mine examiner. This record shall be kept in a book maintained for this purpose on the surface at the mine. The record shall be made by the completion of the shift on which the hazardous condition or violation of the nine mandatory health or safety standards is found and shall include the nature and location of the hazardous condition or violation and the corrective action taken. This record shall not be required for shifts when no hazardous conditions or violations of the nine mandatory health or safety standards are found.

(c) The record shall be made by the certified person who conducted the examination or a person designated by the operator. If made by a person other than the certified person, the certified person shall verify the record by initials and date by or at the end of the shift for which the examination was made. Records shall be countersigned by the mine foreman or equivalent mine official by the end of the mine

foreman's or equivalent mine official's next regularly scheduled working shift. The record shall be made in a secure book that is not susceptible to alteration or electronically in a computer system so as to be secure and not susceptible to alteration.

(d) *Retention period.* Records shall be retained at a surface location at the mine for at least 1 year and shall be made available for inspection by authorized representatives of the Secretary and the representative of miners.

(e) *Review of citations and orders.* The mine operator shall review with mine examiners on a quarterly basis citations and orders issued in areas where preshift, supplemental, on-shift, and weekly examinations are required.

[61 FR 9829, Mar. 11, 1996; 61 FR 26442, May 28, 1996; 77 FR 20715, Apr. 6, 2012]

§ 75.364 Weekly examination.

(a) *Worked-out areas.* (1) At least every 7 days, a certified person shall examine unsealed worked-out areas where no pillars have been recovered by traveling to the area of deepest penetration; measuring methane and oxygen concentrations and air quantities and making tests to determine if the air is moving in the proper direction in the area. The locations of measurement points where tests and measurements will be performed shall be included in the mine ventilation plan and shall be adequate in number and location to assure ventilation and air quality in the area. Air quantity measurements shall also be made where the air enters and leaves the worked-out area. An alternative method of evaluating the ventilation of the area may be approved in the ventilation plan.

(2) At least every 7 days, a certified person shall evaluate the effectiveness of bleeder systems required by § 75.334 as follows:

(i) Measurements of methane and oxygen concentrations and air quantity and a test to determine if the air is moving in its proper direction shall be made where air enters the worked-out area.

(ii) Measurements of methane and oxygen concentrations and air quantity and a test to determine if the air is moving in the proper direction shall be made immediately before the air enters a return split of air.

(iii) At least one entry of each set of bleeder entries used as part of a bleeder system under § 75.334 shall be traveled in its entirety. Measurements of methane and oxygen concentrations and air quantities and a test to determine if the air is moving in the proper direction shall be made at the measurement point locations specified in the mine ventilation plan to determine the effectiveness of the bleeder system.

(iv) In lieu of the requirements of paragraphs (a)(2)(i) and (iii) of this section, an alternative method of evaluation may be specified in the ventilation plan provided the alternative method results in proper evaluation of the effectiveness of the bleeder system.

(b) *Hazardous conditions and violations of mandatory health or safety standards.* At least every 7 days, an examination for hazardous conditions and violations of the mandatory health or safety standards referenced in paragraph (b)(8) of this section shall be made by a certified person designated by the operator at the following locations:

(1) In at least one entry of each intake air course, in its entirety, so that the entire air course is traveled.

(2) In at least one entry of each return air course, in its entirety, so that the entire air course is traveled.

(3) In each longwall or shortwall travelway in its entirety, so that the entire travelway is traveled.

(4) At each seal along return and bleeder air courses and at each seal along intake air courses not examined under § 75.360(b)(5).

(5) In each escapeway so that the entire escapeway is traveled.

(6) On each working section not examined under § 75.360(b)(3) during the previous 7 days.

(7) At each water pump not examined during a preshift examination conducted during the previous 7 days.

(8) Weekly examinations shall include examinations to identify violations of the standards listed below:

(i) §§ 75.202(a) and 75.220(a)(1)—roof control;

(ii) §§ 75.333(h) and 75.370(a)(1)—ventilation, methane;

(iii) §§ 75.400 and 75.403—accumulations of combustible materials and application of rock dust; and

(iv) § 75.1403—maintenance of off track haulage roadways, and track haulage, track switches, and other components for haulage;

(v) § 75.1722(a)—guarding moving machine parts; and

(vi) § 75.1731(a)—maintenance of belt conveyor components.

(c) *Measurements and tests.* At least every 7 days, a certified person shall—

(1) Determine the volume of air entering the main intakes and in each intake split;

(2) Determine the volume of air and test for methane in the last open crosscut in any pair or set of developing entries or rooms, in the return of each split of air immediately before it enters the main returns, and where the air leaves the main returns; and

(3) Test for methane in the return entry nearest each set of seals immediately after the air passes the seals.

(d) Hazardous conditions shall be corrected immediately. If the condition creates an imminent danger, everyone except those persons referred to in section 104(c) of the Act shall be withdrawn from the area affected to a safe area until the hazardous condition is corrected. Any violation of the nine mandatory health or safety standards found during a weekly examination shall be corrected.

(e) The weekly examination may be conducted at the same time as the preshift or on-shift examinations.

(f) (1) The weekly examination is not required during any 7 day period in which no one enters any underground area of the mine.

(2) Except for certified persons required to make examinations, no one shall enter any underground area of the mine if a weekly examination has not been completed within the previous 7 days.

(g) *Certification.* The person making the weekly examinations shall certify by initials, date, and the time that the examination was made. Certifications and times shall appear at enough locations to show that the entire area has been examined.

(h) *Recordkeeping.* At the completion of any shift during which a portion of a weekly examination is conducted, a record of the results of each weekly examination, including a record of hazardous conditions and violations of the nine mandatory health or safety standards found during each examination and their locations, the corrective action taken, and the results and location of air and methane measurements, shall be made. The results of methane tests shall be recorded as the percentage of methane measured by the examiner. The record shall be made by the person making the examination or a person designated by the operator. If made by a person other than the examiner, the examiner shall verify the record by initials and date by or at the end of the shift for which the examination was made. The record shall be countersigned by the mine foreman or equivalent mine official by the end of the mine foreman's or equivalent mine official's next regularly scheduled working shift. The records required by this section shall be made in a secure book that is not susceptible to alteration or electronically in a computer system so as to be secure and not susceptible to alteration.

(i) *Retention period.* Records shall be retained at a surface location at the mine for at least 1 year and shall be made available for inspection by authorized representatives of the Secretary and the representative of miners.

[61 FR 9829, Mar. 11, 1996, as amended at 77 FR 20715, Apr. 6, 2012]

§ 75.370 Mine ventilation plan; submission and approval.

(a) (1) The operator shall develop and follow a ventilation plan approved by the district manager. The plan shall be designed to control methane and respirable dust and shall be suitable to the conditions and mining system at the mine. The ventilation plan shall consist of two parts, the plan content as prescribed in § 75.371 and the ventilation map with information as prescribed in § 75.372. Only that portion of the map which contains information required under § 75.371 will be subject to approval by the district manager.

(2) The proposed ventilation plan and any revision to the plan shall be submitted in writing to the district manager. When revisions to a ventilation plan are proposed, only the revised pages, maps, or sketches of the plan need to be submitted. When required in writing by the district manager, the operator shall submit a fully revised plan by consolidating the plan and all revisions in an orderly manner and by deleting all outdated material.

(3) (i) The mine operator shall notify the representative of miners at least 5 days prior to submission of a mine ventilation plan and any revision to a mine ventilation plan. If requested, the mine operator shall provide a copy to the representative of miners at the time of notification. In the event of a situation requiring immediate action on a plan revision, notification of the revision shall be given, and if requested, a copy of the revision shall be provided, to the representative of miners by the operator at the time of submittal;

(ii) A copy of the proposed ventilation plan, and a copy of any proposed revision, submitted for approval shall be made available for inspection by the representative of miners; and

(iii) A copy of the proposed ventilation plan, and a copy of any proposed revision, submitted for approval shall be posted on the mine bulletin board at the time of submittal. The proposed plan or proposed revision shall remain posted until it is approved, withdrawn or denied.

(b) Following receipt of the proposed plan or proposed revision, the representative of miners may submit timely comments to the district manager, in writing, for consideration during the review process. A copy of these comments shall also be provided to the operator by the district manager upon request.

(c) (1) The district manager will notify the operator in writing of the approval or denial of approval of a proposed ventilation plan or proposed revision. A copy of this notification will be sent to the representative of miners by the district manager.

(2) If the district manager denies approval of a proposed plan or revision, the deficiencies of the plan or revision shall be specified in writing and the operator will be provided an opportunity to discuss the deficiencies with the district manager.

(d) No proposed ventilation plan shall be implemented before it is approved by the district manager. Any intentional change to the ventilation system that alters the main air current or any split of the main air current in a manner that could materially affect the safety and health of the miners, or any change to the information required in § 75.371 shall be submitted to and approved by the district manager before implementation.

(e) Before implementing an approved ventilation plan or a revision to a ventilation plan, persons affected by the revision shall be instructed by the operator in its provisions.

(f) The approved ventilation plan and any revisions shall be—

(1) Provided upon request to the representative of miners by the operator following notification of approval;

(2) Made available for inspection by the representative of miners; and

(3) Posted on the mine bulletin board within 1 working day following notification of approval. The approved plan and revisions shall remain posted on the bulletin board for the period that they are in effect.

(g) The ventilation plan for each mine shall be reviewed every 6 months by an authorized representative of the Secretary to assure that it is suitable to current conditions in the mine.

§ 75.371 Mine ventilation plan; contents.

The mine ventilation plan shall contain the information described below and any additional provisions required by the district manager:

(a) The mine name, company name, mine identification number, and the name of the individual submitting the plan information.

(b) Planned main mine fan stoppages, other than those scheduled for testing, maintenance or adjustment, including procedures to be followed during these stoppages and subsequent restarts (see § 75.311(a)) and the type of device to be used for monitoring main mine fan pressure, if other than a pressure recording device (see 75.310(a)(4)).

(c) Methods of protecting main mine fans and associated components from the forces of an underground explosion if a 15-foot offset from the nearest side of the mine opening is not provided (see § 75.310(a)(6)); and the methods of protecting main mine fans and intake air openings if combustible material will be within 100 feet of the area surrounding the fan or these openings (see § 75.311(f)).

(d) Persons that will be permitted to enter the mine, the work these persons will do while in the mine, and electric power circuits that will be energized when a back-up fan system is used that does not provide the ventilating quantity provided by the main mine fan (see § 75.311(c)).

(e) The locations and operating conditions of booster fans installed in anthracite mines (see § 75.302).

(f) Section and face ventilation systems used, including drawings illustrating how each system is used, and a description of each different dust suppression system used on equipment on working sections.

(g) Locations where the air quantities must be greater than 3,000 cubic feet per minute (see § 75.325(a)(1)).

(h) In anthracite mines, locations where the air quantities must be greater than 1,500 cubic feet per minute (see § 75.325(e)(1)).

(i) Working places and working faces other than those where coal is being cut, mined, drilled for blasting or loaded, where a minimum air quantity will be maintained, and the air quantity at those locations (see § 75.325(a)(1)).

(j) The operating volume of machine mounted dust collectors or diffuser fans, if used (see § 75.325(a)(3)).

(k) The minimum mean entry air velocity in exhausting face ventilation systems where coal is being cut, mined, drilled for blasting, or loaded, if the velocity will be less than 60 feet per minute. Other working places where coal is not being cut, mined, drilled for blasting or loaded, where at least 60 feet per minute or some other minimum mean entry air velocity will be maintained (see § 75.326).

(l) The maximum distance if greater than 10 feet from each working face at which face ventilation control devices will be installed (see § 75.330(b)(2)). The working places other than those where coal is being cut, mined, drilled for blasting or loaded, where face ventilation control devices will be used (see § 75.330(b)(1)(ii).

(m) The volume of air required in the last open crosscut or the quantity of air reaching the pillar line if greater than 9,000 cubic feet per minute (see § 75.325(b)).

(n) In anthracite mines, the volume of air required in the last open crosscut or the quantity of air reaching the pillar line if greater than 5,000 cubic feet per minute (see § 75.325(e)(2)).

(o) Locations where separations of intake and return air courses will be built and maintained to other than the third connecting crosscut outby each working face (see § 75.333(b)(1)).

(p) The volume of air required at the intake to the longwall sections, if different than 30,000 cubic feet per minute (see § 75.325(c)).

(q) The velocities of air on a longwall or shortwall face, and the locations where the velocities must be measured (see § 75.325(c)(2)).

(r) The minimum quantity of air that will be provided during the installation and removal of mechanized mining equipment, the location where this quantity will be provided, and the ventilation controls that will be used (see § 75.325(d), (g), and (i)).

(s) The locations and frequency of the methane tests if required more often by § 75.362(d)(1)(iii) (see § 75.362 (d)(1)(iii).

(t) The locations where samples for ''designated areas'' will be collected, including the specific location of each sampling device, and the respirable dust control measures used at the dust generating sources for these locations (see § 70.208 of this chapter).

(u) The methane and dust control systems at underground dumps, crushers, transfer points, and haulageways.

(v) Areas in trolley haulage entries where the air velocity will be greater than 250 feet per minute and the velocity in these areas (see § 75.327(b)).

(w) Locations where entries will be advanced less than 20 feet from the inby rib without a crosscut being provided where a line brattice will be required. (see § 75.333(g)).

(x) A description of the bleeder system to be used, including its design (see § 75.334).

(y) The means for determining the effectiveness of bleeder systems (see § 75.334(c)(2)).

(z) The locations where measurements of methane and oxygen concentrations and air quantities and tests to determine whether the air is moving in the proper direction will be made to evaluate the ventilation of nonpillared worked-out areas (see § 75.364 (a)(1)) and the effectiveness of bleeder systems (see § 75.364 (a)(2)(iii). Alternative methods of evaluation of the effectiveness of bleeder systems (§ 75.364 (a)(2)(iv)).

(aa) The means for adequately maintaining bleeder entries free of obstructions such as roof falls and standing water (see § 75.334(c)(3)).

(bb) The location of ventilation devices such as regulators, stoppings and bleeder connectors used to control air movement through worked-out areas (see § 75.334(c)(4)). The location and sequence of construction of proposed seals for each worked-out area. (see § 75.334(e)).

(cc) In mines with a demonstrated history of spontaneous combustion: a description of the measures that will be used to detect methane, carbon monoxide, and oxygen concentration during and after pillar recovery and in worked-out areas where no pillars have been recovered (see § 75.334(f)(1); and, the actions which will be taken to protect miners from the hazards associated with spontaneous combustion (see § 75.334(f)(2). If a bleeder system will not be used, the methods that will be used to control spontaneous combustion, accumulations of methane-air mixtures, and other gases, dusts, and fumes in the worked-out area (see § 75.334(f)(3)).

(dd) The location of all horizontal degasification holes that are longer than 1,000 feet and the location of all vertical degasification holes.

(ee) If methane drainage systems are used, a detailed sketch of each system, including a description of safety precautions used with the systems.

(ff) Seal installation requirements provided by § 75.335 and the sampling provisions provided by § 75.336.

(gg) The alternative location for the additional sensing device if the device will not be installed on the longwall shearing machine (see § 75.342(a)(2)).

(hh) The ambient level in parts per million of carbon monoxide, and the method for determining the ambient level, in all areas where carbon monoxide sensors are installed.

(ii) The locations (designated areas) where dust measurements would be made in the belt entry when belt air is used to ventilate working sections or areas where mechanized mining equipment is being installed or removed, in accordance with § 75.350(b)(3).

(jj) The locations and approved velocities at those locations where air velocities in the belt entry are above or below the limits set forth in § 75.350(a)(2) or §§ 75.350(b)(7) and 75.350(b)(8).

(kk) The locations where air quantities are measured as set forth in § 75.350(b)(6).

(ll) The locations and use of point-feed regulators, in accordance with §§ 75.350(c) and 75.350(d)(5).

(mm) The location of any diesel-discriminating sensor, and additional carbon monoxide or smoke sensors installed in the belt air course.

(nn) The length of the time delay or any other method used to reduce the number of non-fire related alert and alarm signals from carbon monoxide sensors.

(oo) The reduced alert and alarm settings for carbon monoxide sensors, in accordance with § 75.351(i)(2).

(pp) The alternate detector and the alert and alarm levels associated with the detector, in accordance with § 75.352(e)(7).

(qq) The distance that separation between the primary escapeway and the belt or track haulage entries will be maintained if other than to the first connecting crosscut outby the section loading point (see § 75.380(g)).

(rr) In anthracite mines, the dimensions of escapeways where the pitch of the coal seam does not permit escapeways to be maintained 4 feet by 5 feet and the locations where these dimensions must be maintained (see § 75.381(c)(4)).

(ss) Areas designated by the district manager where measurements of CO

and NO_2 concentrations will be made (see § 70.1900(a)(4)).

(tt) Location where the air quantity will be maintained at the section loading point (see § 75.325(f)(2)).

(uu) Any additional location(s) required by the district manager where a minimum air quantity must be maintained for an individual unit of diesel-powered equipment. (see § 75.325(f)(5)).

(vv) The minimum air quantities that will be provided where multiple units of diesel-powered equipment are operated (see § 75.325(g) (1)–(3) and (i)).

(ww) The diesel-powered mining equipment excluded from the calculation under § 75.325(g). (see § 75.325(h)).

(xx) Action levels higher than the 50 percent level specified by § 70.1900(c). (see § 75.325(j)).

(yy) The locations where the pressure differential cannot be maintained from the primary escapeway to the belt entry.

[61 FR 9829, Mar. 11, 1996, as amended at 61 FR 55527, Oct. 25, 1996; 69 FR 17529, Apr. 2, 2004; 72 FR 28817, May 22, 2007; 73 FR 21209, Apr. 18, 2008; 73 FR 80613, Dec. 31, 2008]

EFFECTIVE DATE NOTE: At 79 FR 24987, May 1, 2014, § 75.371 was amended by revising paragraphs (f), (j), and (t), effective Aug. 1, 2014. For the convenience of the user, the revised text is set forth as follows:

§ 75.371 Mine ventilation plan; contents.

* * * * *

(f) Section and face ventilation systems used and the minimum quantity of air that will be delivered to the working section for each mechanized mining unit, including drawings illustrating how each system is used, and a description of each different dust suppression system used on equipment, identified by make and model, on each working section, including:

(1) The number, types, location, orientation, operating pressure, and flow rate of operating water sprays;

(2) The maximum distance that ventilation control devices will be installed from each working face when mining or installing roof bolts in entries and crosscuts;

(3) Procedures for maintaining the roof bolting machine dust collection system in approved condition; and

(4) Recommended best work practices for equipment operators to minimize dust exposure.

* * * * *

(j) The operating volume of machine mounted dust collectors or diffuser fans, if used (see § 75.325(a)(3)), including the type and size of dust collector screen used, and a description of the procedures to maintain dust collectors used on equipment.

* * * * *

(t) The locations where samples for ''designated areas'' will be collected, including the specific location of each sampling device, and the respirable dust control measures used at the dust generating sources for these locations (see §§ 70.207 and 70.209 of this chapter).

* * * * *

§ 75.372 Mine ventilation map.

(a)(1) At intervals not exceeding 12 months, the operator shall submit to the district manager 3 copies of an up-to-date map of the mine drawn to a scale of not less than 100 nor more than 500 feet to the inch. A registered engineer or a registered surveyor shall certify that the map is accurate.

(2) In addition to the informational requirements of this section the map may also be used to depict and explain plan contents that are required in § 75.371. Information shown on the map to satisfy the requirements of § 75.371 shall be subject to approval by the district manager.

(b) The map shall contain the following information:

(1) The mine name, company name, mine identification number, a legend identifying the scale of the map and symbols used, and the name of the individual responsible for the information on the map.

(2) All areas of the mine, including sealed and unsealed worked-out areas.

(3) All known mine workings that are located in the same coalbed within 1,000 feet of existing or projected workings. These workings may be shown on a mine map with a scale other than that required by paragraph (a) of this section, if the scale does not exceed 2,000 feet to the inch and is specified on the map.

(4) The locations of all known mine workings underlying and overlying the mine property and the distance between the mine workings.

(5) The locations of all known oil and gas wells and all known drill holes that penetrate the coalbed being mined.

(6) The locations of all main mine fans, installed backup fans and motors, and each fan's specifications, including size, type, model number, manufacturer, operating pressure, motor horsepower, and revolutions per minute.

(7) The locations of all surface mine openings and the direction and quantity of air at each opening.

(8) The elevation at the top and bottom of each shaft and slope, and shaft and slope dimensions, including depth and length.

(9) The direction of air flow in all underground areas of the mine.

(10) The locations of all active working sections and the four-digit identification number for each mechanized mining unit (MMU).

(11) The location of all escapeways and refuge alternatives.

(12) The locations of all ventilation controls, including permanent stoppings, overcasts, undercasts, regulators, seals, airlock doors, haulageway doors and other doors, except temporary ventilation controls on working sections.

(13) The direction and quantity of air—

(i) Entering and leaving each split;

(ii) In the last open crosscut of each set of entries and rooms; and

(iii) At the intake end of each pillar line, including any longwall or shortwall.

(14) Projections for at least 12 months of anticipated mine development, proposed ventilation controls, proposed bleeder systems, and the anticipated location of intake and return air courses, belt entries, and escapeways.

(15) The locations of existing methane drainage systems.

(16) The locations and type of all AMS sensors required by subpart D of this part.

(17) Contour lines that pass through whole number elevations of the coalbed being mined. These lines shall be spaced at 10-foot elevation levels unless a wider spacing is permitted by the district manager.

(18) The location of proposed seals for each worked-out area.

(19) The entry height, velocity and direction of the air current at or near the midpoint of each belt flight where the height and width of the entry are representative of the belt haulage entry.

(20) The location and designation of air courses that have been redesignated from intake to return for the purpose of ventilation of structures, areas or installations that are required by this subpart D to be ventilated to return air courses, and for ventilation of seals.

(c) The mine map required by § 75.1200 may be used to satisfy the requirements for the ventilation map, provided that all the information required by this section is contained on the map.

[61 FR 9829, Mar. 11, 1996, as amended at 69 FR 17530, Apr. 2, 2004; 73 FR 80697, Dec. 31, 2008]

§ 75.373 Reopening mines.

After a mine is abandoned or declared inactive, and before it is reopened, mining operations shall not begin until MSHA has been notified and has completed an inspection.

§ 75.380 Escapeways; bituminous and lignite mines.

(a) Except in situations addressed in § 75.381, § 75.385 and § 75.386, at least two separate and distinct travelable passageways shall be designated as escapeways and shall meet the requirements of this section.

(b) (1) Escapeways shall be provided from each working section, and each area where mechanized mining equipment is being installed or removed, continuous to the surface escape drift opening or continuous to the escape shaft or slope facilities to the surface.

(2) During equipment installation, these escapeways shall begin at the projected location for the section loading point. During equipment removal, they shall begin at the location of the last loading point.

(c) The two separate and distinct escapeways required by this section shall not end at a common shaft, slope, or drift opening, except that multiple compartment shafts or slopes separated by walls constructed of noncombustible material may be used as separate and distinct passageways.

(d) Each escapeway shall be—

(1) Maintained in a safe condition to always assure passage of anyone, including disabled persons;

(2) Clearly marked to show the route and direction of travel to the surface;

(3) Maintained to at least a height of 5 feet from the mine floor to the mine roof, excluding the thickness of any roof support, except that the escapeways shall be maintained to at least the height of the coalbed, excluding the thickness of any roof support, where the coalbed is less than 5 feet. In areas of mines where escapeways pass through doors, the height may be less than 5 feet, provided that sufficient height is maintained to enable miners, including disabled persons, to escape quickly in an emergency. In areas of mines developed before November 16, 1992, where escapeways pass over or under overcasts or undercasts, the height may be less than 5 feet provided that sufficient height is maintained to enable miners, including disabled persons, to escape quickly in an emergency. When there is a need to determine whether sufficient height is provided, MSHA may require a stretcher test where 4 persons carry a miner through the area in question on a stretcher;

(4) Maintained at least 6 feet wide except—

(i) Where necessary supplemental roof support is installed, the escapeway shall not be less than 4 feet wide; or

(ii) Where the route of travel passes through doors or other permanent ventilation controls, the escapeway shall be at least 4 feet wide to enable miners to escape quickly in an emergency, or

(iii) Where the alternate escapeway passes through doors or other permanent ventilation controls or where supplemental roof support is required and sufficient width is maintained to enable miners, including disabled persons, to escape quickly in an emergency. When there is a need to determine whether sufficient width is provided, MSHA may require a stretcher test where 4 persons carry a miner through the area in question on a stretcher, or

(iv) Where mobile equipment near working sections, and other equipment essential to the ongoing operation of longwall sections, is necessary during normal mining operations, such as material cars containing rock dust or roof control supplies, or is to be used for the evacuation of miners off the section in the event of an emergency. In any instance, escapeways shall be of sufficient width to enable miners, including disabled persons, to escape quickly in an emergency. When there is a need to determine whether sufficient width is provided, MSHA may require a stretcher test where 4 persons carry a miner through the area in question on a stretcher;

(5) Located to follow the most direct, safe and practical route to the nearest mine opening suitable for the safe evacuation of miners; and

(6) Provided with ladders, stairways, ramps, or similar facilities where the escapeways cross over obstructions.

(7) Provided with a continuous, durable directional lifeline or equivalent device that shall be—

(i) Installed and maintained throughout the entire length of each escapeway as defined in paragraph (b)(1) of this section;

(ii) Flame-resistant in accordance with the requirements of part 18 of this chapter upon replacement of existing lifelines; but in no case later than June 15, 2009;

(iii) Marked with a reflective material every 25 feet;

(iv) Located in such a manner for miners to use effectively to escape;

(v) Equipped with one directional indicator cone securely attached to the lifeline, signifying the route of escape, placed at intervals not exceeding 100 feet. Cones shall be installed so that the tapered section points inby;

(vi) Equipped with one sphere securely attached to the lifeline at each intersection where personnel doors are installed in adjacent crosscuts;

(vii) Equipped with two securely attached cones, installed consecutively with the tapered section pointing inby, to signify an attached branch line is immediately ahead.

(A) A branch line leading from the lifeline to an SCSR cache will be marked with four cones with the base sections in contact to form two diamond shapes. The cones must be placed within reach of the lifeline.

(B) A branch line leading from the lifeline to a refuge alternative will be marked with a rigid spiraled coil at least eight inches in length. The spiraled coil must be placed within reach of the lifeline (see Illustration 1 below).

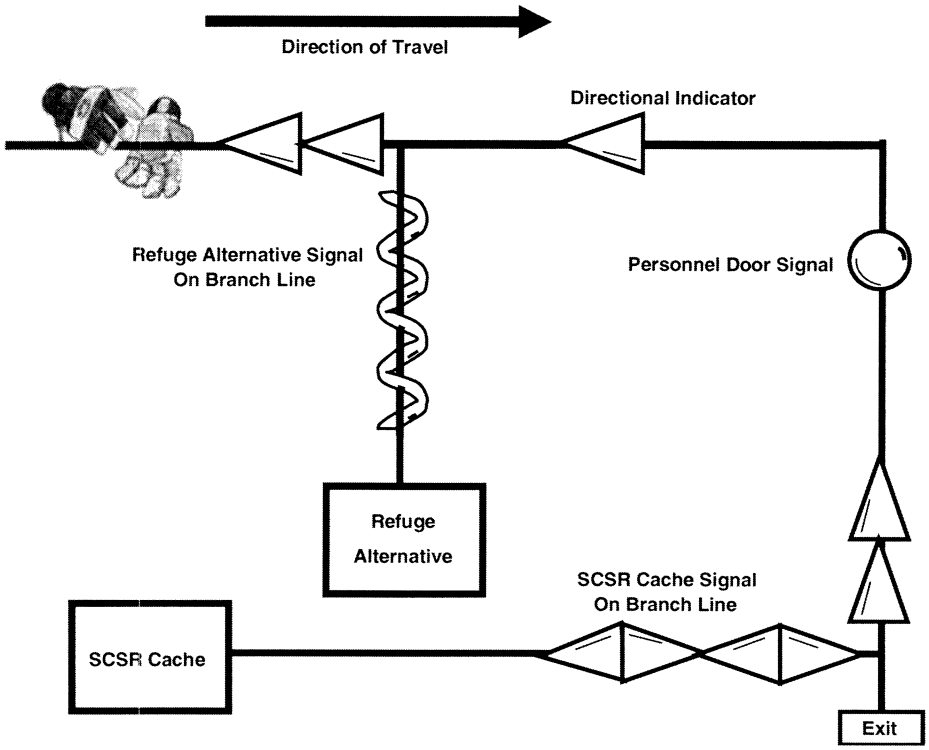

Illustration 1

(e) Surface openings shall be adequately protected to prevent surface fires, fumes, smoke, and flood water from entering the mine.

(f) *Primary escapeway.* (1) One escapeway that is ventilated with intake air shall be designated as the primary escapeway. The primary escapeway shall have a higher ventilation pressure than the belt entry unless the mine operator submits an alternative in the mine ventilation plan to protect the integrity of the primary escapeway, based on mine specific conditions, which is approved by the district manager.

(2) Paragraphs (f)(3) through (f)(7) of this section apply as follows:

(i) To all areas of a primary escapeway developed on or after November 16, 1992;

(ii) Effective as of June 10, 1997, to all areas of a primary escapeway developed between March 30, 1970 and November 16, 1992; and

(iii) Effective as of June 10, 1997, to all areas of the primary escapeway developed prior to March 30, 1970 where separation of the belt and trolley haulage entries from the primary escapeway existed prior to November 16, 1992.

(3) The following equipment is not permitted in the primary escapeway:

(i) Mobile equipment hauling coal except for hauling coal incidental to

cleanup or maintenance of the primary escapeway.

(ii) Compressors, except—

(A) Compressors necessary to maintain the escapeway in safe, travelable condition;

(B) Compressors that are components of equipment such as locomotives and rock dusting machines; and

(C) Compressors of less than five horsepower.

(iii) Underground transformer stations, battery charging stations, substations, and rectifiers except—

(A) Where necessary to maintain the escapeway in safe, travelable condition; and

(B) Battery charging stations and rectifiers and power centers with transformers that are either dry-type or contain nonflammable liquid, provided they are located on or near a working section and are moved as the section advances or retreats.

(iv) Water pumps, except—

(A) Water pumps necessary to maintain the escapeway in safe, travelable condition;

(B) Submersible pumps;

(C) Permissible pumps and associated permissible switchgear;

(D) Pumps located on or near a working section that are moved as the section advances or retreats;

(E) Pumps installed in anthracite mines; and

(F) Small portable pumps.

(4) Mobile equipment operated in the primary escapeway, except for continuous miners and as provided in paragraphs (f)(5), (f)(6), and (f)(7) of this section, shall be equipped with a fire suppression system installed according to §§ 75.1107–3 through 75.1107–16 that is—

(i) Manually operated and attended continuously by a person trained in the systems function and use, or

(ii) A multipurpose dry chemical type capable of both automatic and manual activation.

(5) Personnel carriers and small mobile equipment designed and used only for carrying people and small hand tools may be operated in primary escapeways if—

(i) The equipment is provided with a multipurpose dry chemical type fire suppression system capable of both automatic and manual activation, and the suppression system is suitable for the intended application and is listed or approved by a nationally recognized independent testing laboratory, or,

(ii) Battery powered and provided with two 10 pound multipurpose dry chemical portable fire extinguishers.

(6) Notwithstanding the requirements of paragraph (f)(3)(i), mobile equipment not provided with a fire suppression system may operate in the primary escapeway if no one is inby except those persons directly engaged in using or moving the equipment.

(7) Notwithstanding the requirements of paragraph (f)(3)(i), mobile equipment designated and used only as emergency vehicles or ambulances, may be operated in the primary escapeway without fire suppression systems.

(g) Except where separation of belt and trolley haulage entries from designated escapeways did not exist before November 15, 1992, and except as provided in § 75.350(c), the primary escapeway must be separated from belt and trolley haulage entries for its entire length, to and including the first connecting crosscut outby each loading point except when a greater or lesser distance for this separation is specified and approved in the mine ventilation plan and does not pose a hazard to miners.

(h) *Alternate escapeway*. One escapeway shall be designated as the alternate escapeway. The alternate escapeway shall be separated from the primary escapeway for its entire length, except that the alternate and primary escapeways may be ventilated from a common intake air shaft or slope opening.

(i) Mechanical escape facilities shall be provided and maintained for—

(1) Each shaft that is part of a designated escapeway and is greater than 50 feet in depth; and

(2) Each slope from the coal seam to the surface that is part of a designated escapeway and is inclined more than 9 degrees from the horizontal.

(j) Within 30 minutes after mine personnel on the surface have been notified of an emergency requiring evacuation, mechanical escape facilities provided under paragraph (i) of this section shall be operational at the bottom

of shaft and slope openings that are part of escapeways.

(k) Except where automatically activated hoisting equipment is used, the bottom of each shaft or slope opening that is part of a designated escapeway shall be equipped with a means of signaling a surface location where a person is always on duty when anyone is underground. When the signal is activated or the evacuation of persons underground is necessary, the person shall assure that mechanical escape facilities are operational as required by paragraph (j) of this section.

(l)(1) Stairways or mechanical escape facilities shall be installed in shafts that are part of the designated escapeways and that are 50 feet or less in depth, except ladders may be used in shafts that are part of the designated escapeways and that are 5 feet or less in depth.

(2) Stairways shall be constructed of concrete or metal, set on an angle not to exceed 45 degrees from the horizontal, and equipped on the open side with handrails. In addition, landing platforms that are at least 2 feet by 4 feet shall be installed at intervals not to exceed 20 vertical feet on the stairways and equipped on the open side with handrails.

(3) Ladders shall be constructed of metal, anchored securely, and set on an angle not to exceed 60 degrees from the horizontal.

(m) A travelway designed to prevent slippage shall be provided in slope and drift openings that are part of designated escapeways, unless mechanical escape facilities are installed.

[61 FR 9829, Mar. 11, 1996; 61 FR 20877, May 8, 1996, as amended at 61 FR 55527, Oct. 25, 1996; 69 FR 17530, Apr. 2, 2004; 71 FR 12269, Mar. 9, 2006; 71 FR 71452, Dec. 8, 2006; 73 FR 80613, Dec. 31, 2008]

§ 75.381 Escapeways; anthracite mines.

(a) Except as provided in §§ 75.385 and 75.386, at least two separate and distinct travelable passageways shall be designated as escapeways and shall meet the requirements of this section.

(b) Escapeways shall be provided from each working section continuous to the surface.

(c) Each escapeway shall be—

(1) Maintained in a safe condition to always assure passage of anyone, including disabled persons;

(2) Clearly marked to show the route of travel to the surface;

(3) Provided with ladders, stairways, ramps, or similar facilities where the escapeways cross over obstructions; and

(4) Maintained at least 4 feet wide by 5 feet high. If the pitch or thickness of the coal seam does not permit these dimensions to be maintained other dimensions may be approved in the ventilation plan.

(5) Provided with a continuous, durable directional lifeline or equivalent device that shall be—

(i) Installed and maintained throughout the entire length of each escapeway as defined in paragraph (b) of this section;

(ii) Flame-resistant in accordance with the requirements of part 18 of this chapter upon replacement of existing lifelines; but in no case later than June 15, 2009;

(iii) Marked with a reflective material every 25 feet;

(iv) Located in such a manner for miners to use effectively to escape;

(v) Equipped with one directional indicator cone securely attached to the lifeline, signifying the route of escape, placed at intervals not exceeding 100 feet. Cones shall be installed so that the tapered section points inby;

(vi) Equipped with one sphere securely attached to the lifeline at each intersection where personnel doors are installed in adjacent crosscuts;

(vii) Equipped with two securely attached cones, installed consecutively with the tapered section pointing inby, to signify an attached branch line is immediately ahead.

(A) A branch line leading from the lifeline to an SCSR cache will be marked with four cones with the base sections in contact to form two diamond shapes. The cones must be placed within reach of the lifeline.

(B) A branch line leading from the lifeline to a refuge alternative will be marked with a rigid spiraled coil at least eight inches in length. The spiraled coil must be placed within reach of the lifeline.

(d) Surface openings shall be adequately protected to prevent surface fires, fumes, smoke, and flood water from entering the mine.

(e) *Primary escapeway*. One escapeway that shall be ventilated with intake air shall be designated as the primary escapeway. The primary escapeway shall have a higher ventilation pressure than the belt entry unless the mine operator submits an alternative in the mine ventilation plan to protect the integrity of the primary escapeway, based on mine specific conditions, which is approved by the district manager.

(f) *Alternate escapeway*. One escapeway that shall be designated as the alternate escapeway shall be separated from the primary escapeway for its entire length.

(g) Mechanical escape facilities shall be provided—

(1) For each shaft or slope opening that is part of a primary escapeway; and

(2) For slopes that are part of escapeways, unless ladders are installed.

(h) Within 30 minutes after mine personnel on the surface have been notified of an emergency requiring evacuation, mechanical escape facilities shall be operational at the bottom of each shaft and slope opening that is part of an escapeway.

(i) Except where automatically activated hoisting equipment is used, the bottom of each shaft or slope opening that is part of a primary escapeway shall be equipped with a means of signaling a surface location where a person is always on duty when anyone is underground. When the signal is activated or the evacuation of personnel is necessary, the person on duty shall assure that mechanical escape facilities are operational as required by paragraph (h) of this section.

[61 FR 9829, Mar. 11, 1996, as amended at 71 FR 12269, Mar. 9, 2006; 71 FR 71452, Dec. 8, 2006; 73 FR 80614, Dec. 31, 2008]

§ 75.382 Mechanical escape facilities.

(a) Mechanical escape facilities shall be provided with overspeed, overwind, and automatic stop controls.

(b) Every mechanical escape facility with a platform, cage, or other device shall be equipped with brakes that can stop the fully loaded platform, cage, or other device.

(c) Mechanical escape facilities, including automatic elevators, shall be examined weekly. The weekly examination of this equipment may be conducted at the same time as a daily examination required by § 75.1400–3.

(1) The weekly examination shall include an examination of the headgear, connections, links and chains, overspeed and overwind controls, automatic stop controls, and other facilities.

(2) At least once each week, the hoist shall be run through one complete cycle of operation to determine that it is operating properly.

(d) A person trained to operate the mechanical escape facility always shall be available while anyone is underground to provide the mechanical escape facilities, if required, to the bottom of each shaft and slope opening that is part of an escapeway within 30 minutes after personnel on the surface have been notified of an emergency requiring evacuation. However, no operator is required for automatically operated cages, platforms, or elevators.

(e) Mechanical escape facilities shall have rated capacities consistent with the loads handled.

(f) Manually-operated mechanical escape facilities shall be equipped with indicators that accurately and reliably show the position of the facility.

(g) *Certification*. The person making the examination as required by paragraph (c) of this section shall certify by initials, date, and the time that the examination was made. Certifications shall be made at or near the facility examined.

§ 75.384 Longwall and shortwall travelways.

(a) If longwall or shortwall mining systems are used and the two designated escapeways required by § 75.380 are located on the headgate side of the longwall or shortwall, a travelway shall be provided on the tailgate side of that longwall or shortwall. The travelway shall be located to follow the most direct and safe practical route to a designated escapeway.

(b) The route of travel shall be clearly marked.

(c) When a roof fall or other blockage occurs that prevents travel in the travelway—

(1) Work shall cease on the longwall or shortwall face;

(2) Miners shall be withdrawn from face areas to a safe area outby the section loading point; and

(3) MSHA shall be notified.

(d) Work may resume on the longwall or shortwall face after the procedures set out in §§ 75.215 and 75.222 are implemented.

§ 75.385 Opening new mines.

When new mines are opened, no more than 20 miners at a time shall be allowed in any mine until a connection has been made between the mine openings, and these connections shall be made as soon as possible.

§ 75.386 Final mining of pillars.

When only one mine opening is available due to final mining of pillars, no more than 20 miners at a time shall be allowed in the mine, and the distance between the mine opening and working face shall not exceed 500 feet.

§ 75.388 Boreholes in advance of mining.

(a) Boreholes shall be drilled in each advancing working place when the working place approaches—

(1) To within 50 feet of any area located in the mine as shown by surveys that are certified by a registered engineer or registered surveyor unless the area has been preshift examined;

(2) To within 200 feet of any area located in the mine not shown by surveys that are certified by a registered engineer or registered surveyor unless the area has been preshift examined; or

(3) To within 200 feet of any mine workings of an adjacent mine located in the same coalbed unless the mine workings have been preshift examined.

(b) Boreholes shall be drilled as follows:

(1) Into the working face, parallel to the rib, and within 3 feet of each rib.

(2) Into the working face, parallel to the rib, and at intervals across the face not to exceed 8 feet.

(3) At least 20 feet in depth in advance of the working face, and always maintained to a distance of 10 feet in advance of the working face.

(c) Boreholes shall be drilled in both ribs of advancing working places described in paragraph (a) of this section unless an alternative drilling plan is approved by the District Manager in accordance with paragraph (g) of this section. These boreholes shall be drilled—

(1) At an angle of 45 degrees to the direction of advance;

(2) At least 20 feet in depth; and

(3) At intervals not to exceed 8 feet.

(d) When a borehole penetrates an area that cannot be examined, and before mining continues, a certified person shall, if possible, determine—

(1) The direction of airflow in the borehole;

(2) The pressure differential between the penetrated area and the mine workings;

(3) The concentrations of methane, oxygen, carbon monoxide, and carbon dioxide; and

(4) Whether water is impounded within the penetrated area.

(e) Unless action is taken to dewater or to ventilate penetrated areas, boreholes shall be plugged with wooden plugs or similar devices when—

(1) Tests conducted at the boreholes show that the atmosphere in the penetrated area contains more than 1.0 percent methane, less than 19.5 percent oxygen, or harmful concentrations of carbon monoxide, carbon dioxide or other explosive, harmful or noxious gases;

(2) Tests for methane, oxygen, carbon monoxide, and carbon dioxide cannot be made because air from mine workings is flowing into the penetrated area; or

(3) Water is discharging through the boreholes from the penetrated area into the mine workings.

(f) If mining is to be conducted within 50 feet above or below an inaccessible area of another mine, boreholes shall be drilled, as necessary, according to a plan approved by the district manager.

(g) Alternative borehole patterns that provide the same protection to miners as the pattern established by

paragraphs (b) and (c) of this section may be used under a plan approved by the district manager.

§ 75.389 Mining into inaccessible areas.

(a) (1) The operator shall develop and follow a plan for mining into areas penetrated by boreholes drilled under § 75.388.

(2) Mining shall not resume into any area penetrated by boreholes until conditions in the penetrated area can be determined under § 75.388 and the plan for mining-through into the area has been approved by the district manager.

(3) A copy of the procedures to be followed shall be posted near the site of the mining-through operations and the operator shall explain these procedures to all miners involved in the operations.

(b) The procedures specified in the plan shall include—

(1) The method of ventilation, ventilation controls, and the air quantities and velocities in the affected working section and working place;

(2) Dewatering procedures to be used if a penetrated area contains a water accumulation; and

(3) The procedures and precautions to be followed during mining-through operations.

(c) Except for routine mining-through operations that are part of a retreat section ventilation system approved in accordance with § 75.371(f) and (x), the following provisions shall apply:

(1) Before and during mining-through operations, a certified person shall perform air quality tests at intervals and at locations necessary to protect the safety of the miners.

(2) During mining-through operations, only persons involved in these operations shall be permitted in the mine; and

(3) After mining-through, a certified person shall determine that the affected areas are safe before any persons enter the underground areas of the mine.

Subpart E—Combustible Materials and Rock Dusting

§ 75.400 Accumulation of combustible materials.

Coal dust, including float coal dust deposited on rock-dusted surfaces, loose coal, and other combustible materials, shall be cleaned up and not be permitted to accumulate in active workings, or on diesel-powered and electric equipment therein.

[61 FR 55527, Oct. 25, 1996]

§ 75.400–1 Definitions.

(a) The term *coal dust* means particles of coal that can pass a No. 20 sieve.

(b) The term *float coal dust* means the coal dust consisting of particles of coal that can pass a No. 200 sieve.

(c) The term *loose coal* means coal fragments larger in size than coal dust.

§ 75.400–2 Cleanup program.

A program for regular cleanup and removal of accumulations of coal and float coal dusts, loose coal, and other combustibles shall be established and maintained. Such program shall be available to the Secretary or authorized representative.

§ 75.401 Abatement of dust; water or water with a wetting agent.

[STATUTORY PROVISION]

Where underground mining operations in active workings create or raise excessive amounts of dust, water or water with a wetting agent added to it, or other no less effective methods approved by the Secretary or his authorized representative, shall be used to abate such dust. In working places, particularly in distances less than 40 feet from the face, water, with or without a wetting agent, or other no less effective methods approved by the Secretary or his authorized representative, shall be applied to coal dust on the ribs, roof, and floor to reduce dispersibility and to minimize the explosion hazard.

§ 75.401–1 Excessive amounts of dust.

The term ''excessive amounts of dust'' means coal and float coal dust in

the air in such amounts as to create the potential of an explosion hazard.

§ 75.402 Rock dusting.

[STATUTORY PROVISION]

All underground areas of a coal mine, except those areas in which the dust is too wet or too high in incombustible content to propagate an explosion, shall be rock dusted to within 40 feet of all working faces, unless such areas are inaccessible or unsafe to enter or unless the Secretary or his authorized representative permits an exception upon his finding that such exception will not pose a hazard to the miners. All crosscuts that are less than 40 feet from a working face shall also be rock dusted.

§ 75.402–1 Definition.

The term *too wet* means that sufficient natural moisture is retained by the dust that when a ball of finely divided material is squeezed in the hands water is exuded.

§ 75.402–2 Exceptions.

Exceptions granted under § 75.402 by the Secretary or his authorized representative shall be reviewed periodically.

§ 75.403 Maintenance of incombustible content of rock dust.

Where rock dust is required to be applied, it shall be distributed upon the top, floor, and sides of all underground areas of a coal mine and maintained in such quantities that the incombustible content of the combined coal dust, rock dust, and other dust shall be not less than 80 percent. Where methane is present in any ventilating current, the percent of incombustible content of such combined dust shall be increased 0.4 percent for each 0.1 percent of methane.

[75 FR 57857, Sept. 23, 2010; 76 FR 35978, June 21, 2011]

§ 75.403–1 Incombustible content.

Moisture contained in the combined coal dust, rock dust and other dusts shall be considered as a part of the incombustible content of such mixture.

§ 75.404 Exemption of anthracite mines.

[STATUTORY PROVISION]

Sections 75.401, 75.402, and 75.403 shall not apply to underground anthracite mines.

Subpart F—Electrical Equipment—General

§ 75.500 Permissible electric equipment.

[STATUTORY PROVISION]

On and after March 30, 1971:

(a) All junction or distribution boxes used for making multiple power connections inby the last open crosscut shall be permissible;

(b) All handheld electric drills, blower and exhaust fans, electric pumps, and such other low horsepower electric face equipment as the Secretary may designate on or before May 30, 1970, which are taken into or used inby the last open crosscut of any coal mine shall be permissible;

(c) All electric face equipment which is taken into or used inby the last open crosscut of any coal mine classified under any provision of law as gassy prior to March 30, 1970, shall be permissible; and

(d) All other electric face equipment which is taken into or used inby the last crosscut of any coal mine, except a coal mine referred to in § 75.501, which has not been classified under any provision of law as a gassy mine prior to March 30, 1970, shall be permissible.

§ 75.500–1 Other low horsepower electric face equipment.

Other low horsepower electric face equipment designated pursuant to the provisions of § 75.500(b) is all other electric-driven mine equipment, except low horsepower rock dusting equipment, and employs an electric current supplied by either a power conductor or battery and consumes not more than 2,250 watts of electricity and which is taken into or used inby the last open crosscut.

§ 75.501 Permissible electric face equipment; coal seams above water table.

[STATUTORY PROVISION]

On and after March 30, 1974, all electric face equipment, other than equipment referred to in paragraph (b) of § 75.500, which is taken into and used inby the last open crosscut of any coal mine which is operated entirely in coal seams located above the water table and which has not been classified under any provision of law as a gassy mine prior to March 30, 1970, and in which one or more openings were made prior to December 30, 1969, shall be permissible.

§ 75.501–1 Coal seams above the water table.

As used in § 75.501, the phrase ''coal seams above the water table'' means coal seams in a mine which are located at an elevation above a river or the tributary of a river into which a local surface water system naturally drains.

§ 75.501–2 Permissible electric face equipment.

(a) On and after March 30, 1971, in mines operated entirely in coal seams which are located at elevations above the water table:

(1) All junction or distribution boxes used for making multiple power connections inby the last open crosscut shall be permissible; and

(2) All handheld electric drills, blower and exhaust fans, electric pumps, and all other electric-driven mine equipment, except low horsepower rock dusting equipment, that employs an electric current supplied by either a power conductor or battery and consumes not more than 2,250 watts of electricity, which is taken into or used inby the last open crosscut shall be permissible.

(b) On and after March 30, 1974, in mines operated entirely in coal seams which are located at elevations above the water table, all electric face equipment which is taken into or used inby the last crosscut shall be permissible.

§ 75.501–3 New openings; mines above water table and never classed gassy.

(a) Where a new opening(s) is proposed to be developed by shaft, slope, or drift from the surface to, or in, any coalbed and the operator considers such proposed new opening(s) to be a part of a mine coming under section 305(a)(2) of the Act and § 75.501 the operator shall so notify the District Manager for the District in which the mine is located in writing prior to the date any actual development (in coal) through such opening(s) is undertaken. Such notification shall include the following information:

(1) Name, address, and identification number of the existing mine.

(2) A current map of the existing mine clearly setting out the proposed new opening(s), mining plan and planned interconnection, if any, with existing workings.

(3) A statement as to when the operator obtained the right to mine the coal which the proposed new opening(s) will traverse.

(4) The name of the coalbeds currently being mined and those which the new opening(s) will traverse.

(5) The expected life of the mine.

(6) The reason(s) for the proposed new opening(s) (for example, haulage, ventilation, drainage, to avoid bad roof, escapeway).

The District Manager shall require submission of any additional information he considers pertinent.

(b) The District Manager shall make a determination based on all of the information submitted by the operator as to whether the proposed new opening(s) will be considered as a part of the existing mine or as a new mine. The following guidelines and criteria shall be used by the District Manager in making his determination:

(1) The effect that the proposed new opening(s) will have on the safety of the men working in the existing mine shall be considered of primary importance.

(2) Whether the operator had a right to mine the coal which the proposed new openings will traverse prior to the date of enactment of the Act (December 30, 1969) and whether the original mining plan included mining such coal.

(3) Whether, in accordance with the usual mining practices common to the particular district, the proposed new openings would have been considered a new mine or part of the existing mine. A number of factors will be considered including, but not limited to:

(i) The relationship between the coalbeds currently being mined, and those proposed to be mined;

(ii) The distance between existing openings and the proposed new opening(s);

(iii) The projected time elapsing between the start of the new opening(s) and planned interconnection, if any, with the existing mine; and

(iv) The projected tonnage of coal which is expected to be mined prior to interconnection where interconnection is planned.

The District Manager shall notify the operator in writing within 30 days of receiving all of the information, required and requested, of his determination. No informal notification shall be given.

(c) All new opening(s) shall be operated as a new mine prior to receiving a written notification from the District Manager that such new opening(s) will be considered part of an existing mine coming under section 305(a)(2) of the Act and § 75.501.

(d) Nothing in this § 75.501–3 shall be construed to relieve the operator from compliance with any of the mandatory standards contained in this Part 75.

[37 FR 8949, May 3, 1972]

§ 75.502 Permits for noncompliance.

An operator need not comply with paragraph (d) of § 75.500 or with § 75.501 during the period of time specified in a permit issued by the Interim Compliance Panel established by the Act.

§ 75.503 Permissible electric face equipment; maintenance.

[STATUTORY PROVISIONS]

The operator of each coal mine shall maintain in permissible condition all electric face equipment required by §§ 75.500, 75.501, 75.504 to be permissible which is taken into or used inby the last open crosscut of any such mine.

§ 75.503–1 Statement listing all electric face equipment.

Each operator of a coal mine shall complete and file Mine Safety and Health Administration Form No. 6–1496 entitled ''Coal Operator's Electrical Survey'' and Form 6–1496 Supplemental entitled ''Operator's Survey of Electrical Face Equipment.'' Forms may be obtained from any MSHA Coal Mine Safety and Health district office. Separate forms shall be filed for each mine. Copies one and two of the completed form shall be filed with the Coal Mine District Manager for the district in which each mine is located on or before May 30, 1970. An operator must list all electric face equipment being used at each mine as of the time of filing, all such equipment being repaired, and all standby electric equipment stored at or in the mine which the operator intends to use as face equipment.

[35 FR 17890, Nov. 20, 1970, as amended at 71 FR 16668, Apr. 3, 2006]

§ 75.504 Permissibility of new, replacement, used, reconditioned, additional, and rebuilt electric face equipment.

On and after March 30, 1971, all new, replacement, used, reconditioned, and additional electric face equipment used in any mine referred to in §§ 75.500, 75.501, and 75.503 shall be permissible and shall be maintained in a permissible condition, and in the event of any major overhaul of any item of electric face equipment in use on or after March 30, 1971, such equipment shall be put in, and thereafter maintained in, a permissible condition, unless in the opinion of the Secretary, such equipment or necessary replacement parts are not available.

[38 FR 4975, Feb. 23, 1973]

§ 75.505 Mines classed gassy; use and maintenance of permissible electric face equipment.

[STATUTORY PROVISION]

Any coal mine which, prior to March 30, 1970, was classed gassy under any provision of law and was required to use permissible electric face equipment and to maintain such equipment in a permissible condition shall continue to

use such equipment and to maintain such equipment in such condition.

§ 75.506 Electric face equipment; requirements for permissibility.

(a) Electric-driven mine equipment and accessories manufactured on or after March 30, 1973, will be permissible electric face equipment only (1) if they are fabricated, assembled, or built under an approval, or any extension thereof, issued by the Bureau of Mines or the Mine Safety and Health Administration in accordance with schedule 2G, or any subsequent Bureau of Mines schedule promulgated by the Secretary after March 30, 1970, which amends, modifies, or supersedes the permissibility requirements of schedule 2G, and (2) if they are maintained in a permissible condition.

(b) Except as provided in paragraph (c) of this § 75.506 electric-driven mine equipment and accessories manufactured prior to March 30, 1973, will be permissible electric face equipment (1) if they were fabricated, assembled, or built under an approval, or any extension thereof, issued by the Bureau of Mines in accordance with the schedules set forth below, and (2) if they are maintained in a permissible condition.

Bureau of Mines Schedule 2D, May 23, 1936;
Bureau of Mines Schedule 2E, February 15, 1945;
Bureau of Mines Schedule 2F, August 3, 1955; and
Bureau of Mines Schedule 2G, March 19, 1968.

Copies of these schedules are available at all MSHA Coal Mine Safety and Health district offices.

(c) Electric driven mine equipment and accessories bearing the Bureau of Mines approval numbers listed in Appendix A to this subpart are permissible electric face equipment only if they are maintained in a permissible condition.

(d) The following equipment will be permissible electric face equipment only if it is approved under the appropriate parts of this chapter, or former Bureau of Mines' approval schedules, and if it is in permissible condition:

(1) Multiple-Shot Blasting Units, part 7 subpart D;

(2) Electric Cap Lamps, part 19;

(3) Electric Mine Lamps Other than Standard Cap Lamps, part 20;

(4) Flame Safety Lamps;

(5) Portable Methane Detectors, part 22;

(6) Telephone and Signaling Devices, part 23;

(7) Single-Shot Blasting Units;

(8) Lighting Equipment for Illuminating Underground Workings;

(9) Methane-Monitoring Systems, part 27; and

(10) Continuous Duty, Warning Light, Portable Methane Detectors, 30 CFR part 29 contained in the 30 CFR, parts 1–199, edition, revised as of July 1, 1999.

[35 FR 17890, Nov. 20, 1970, as amended at 63 FR 47119, Sept. 3, 1998; 64 FR 43283, Aug. 10, 1999; 71 FR 16668, Apr. 3, 2006]

§ 75.506–1 Electric face equipment; permissible condition; maintenance requirements.

(a) Except as provided in paragraph (b) of this section, electric face equipment which meets the requirements for permissibility set forth in § 75.506 will be considered to be in permissible condition only if it is maintained so as to meet the requirements for permissibility set forth in the Bureau of Mines schedule under which such electric face equipment was initially approved, or, if the equipment has been modified, it is maintained so as to meet the requirements of the schedule under which such modification was approved.

(b) Electric face equipment bearing the Bureau of Mines approval number listed in Appendix A of this subpart will be considered to be in permissible condition only if it is maintained so as to meet the requirements for permissibility set forth in Bureau of Mines Schedule 2D or, if such equipment has been modified, it is maintained so as to meet the requirements of the schedule under which the modification was approved.

(c) Notwithstanding the provisions of paragraphs (a) and (b) of this section, where the minimum requirements for permissibility set forth in the appropriate Bureau of Mines schedule under which such equipment or modifications were approved have been superseded by the requirements of this Part 75, the latter requirements shall be applicable.

§ 75.507 Power connection points.

[STATUTORY PROVISIONS]

Except where permissible power connection units are used, all power-connection points outby the last open crosscut shall be in intake air.

§ 75.507–1 Electric equipment other than power-connection points; outby the last open crosscut; return air; permissibility requirements.

(a) All electric equipment, other than power-connection points, used in return air outby the last open crosscut in any coal mine shall be permissible except as provided in paragraphs (b) and (c) of this section.

(b) Notwithstanding the provisions of paragraph (a) of this section, in any coal mine where nonpermissible electric face equipment may be taken into or used inby the last open crosscut until March 30, 1974, such nonpermissible electric face equipment may be used in return air outby the last open crosscut.

(c) Notwithstanding the provisions of paragraph (a) of this section, in any coal mine where a permit for noncompliance is in effect, nonpermissible electric face equipment specified in such permit for noncompliance may be used in return air outby the last open crosscut for the duration of such permit.

[38 FR 4975, Feb. 23, 1973]

§ 75.508 Map of electrical system.

[STATUTORY PROVISIONS]

The location and the electrical rating of all stationary electric apparatus in connection with the mine electric system, including permanent cables, switchgear, rectifying substations, transformers, permanent pumps, and trolley wires and trolley feeder wires, and settings of all direct-current circuit breakers protecting underground trolley circuits, shall be shown on a mine map. Any changes made in a location, electric rating, or setting shall be promptly shown on the map when the change is made. Such map shall be available to an authorized representative of the Secretary and to the miners in such mine.

§ 75.508–1 Mine tracks.

When mine track is used as a conductor of a trolley system, the location of such track shall be shown on the map required by § 75.508, with a notation of the number of rails and the size of such track expressed in pounds per yard.

§ 75.508–2 Changes in electric system map; recording.

Changes made in the location, electrical rating or setting within the mine electrical system shall be recorded on the map of such system no later than the end of the next workday following completion of such changes.

§ 75.509 Electric power circuit and electric equipment; deenergization.

[STATUTORY PROVISIONS]

All power circuits and electric equipment shall be deenergized before work is done on such circuits and equipment, except when necessary for trouble shooting or testing.

§ 75.510 Energized trolley wires; repair.

[STATUTORY PROVISIONS]

Energized trolley wires may be repaired only by a person trained to perform electrical work and to maintain electrical equipment and the operator of a mine shall require that such person wear approved and tested insulated shoes and wireman's gloves.

§ 75.510–1 Repair of energized trolley wires; training.

The training referred to in § 75.510 must include training in the repair and maintenance of live trolley wires, and in the hazards involved in making such repairs, and in the limitations of protective clothing used to protect against such hazards.

§ 75.511 Low-, medium-, or high-voltage distribution circuits and equipment; repair.

[STATUTORY PROVISION]

No electrical work shall be performed on low-, medium-, or high-voltage distribution circuits or equipment, except by a qualified person or by a person

trained to perform electrical work and to maintain electrical equipment under the direct supervision of a qualified person. Disconnecting devices shall be locked out and suitably tagged by the persons who perform such work, except that in cases where locking out is not possible, such devices shall be opened and suitably tagged by such persons. Locks or tags shall be removed only by the persons who installed them or, if such persons are unavailable, by persons authorized by the operator or his agent.

§ 75.511–1 Qualified person.

To be a qualified person within the meaning of § 75.511, an individual must meet the requirements of § 75.153.

§ 75.512 Electric equipment; examination, testing and maintenance.

[STATUTORY PROVISION]

All electric equipment shall be frequently examined, tested, and properly maintained by a qualified person to assure safe operating conditions. When a potentially dangerous condition is found on electric equipment, such equipment shall be removed from service until such condition is corrected. A record of such examinations shall be kept and made available to an authorized representative of the Secretary and to the miners in such mine.

[35 FR 17890, Nov. 20, 1970, as amended at 60 FR 33723, June 29, 1995]

§ 75.512–1 Qualified person.

To be a qualified person within the meaning of § 75.512, an individual must meet the requirements of § 75.153.

§ 75.512–2 Frequency of examinations.

The examinations and tests required by § 75.512 shall be made at least weekly. Permissible equipment shall be examined to see that it is in permissible condition.

§ 75.513 Electric conductor; capacity and insulation.

[STATUTORY PROVISION]

All electric conductors shall be sufficient in size and have adequate current carrying capacity and be of such construction that a rise in temperature resulting from normal operation will not damage the insulating materials.

§ 75.513–1 Electric conductor; size.

An electric conductor is not of sufficient size to have adequate carrying capacity if it is smaller than is provided for in the National Electric Code, 1968. In addition, equipment and trailing cables that are required to be permissible must meet the requirements of the appropriate schedules of the Bureau of Mines.

§ 75.514 Electrical connections or splices; suitability.

[STATUTORY PROVISION]

All electrical connections or splices in conductors shall be mechanically and electrically efficient, and suitable connectors shall be used. All electrical connections or splices in insulated wire shall be reinsulated at least to the same degree of protection as the remainder of the wire.

§ 75.515 Cable fittings; suitability.

[STATUTORY PROVISION]

Cables shall enter metal frames of motors, splice boxes, and electric compartments only through proper fittings. When insulated wires other than cables pass through metal frames, the holes shall be substantially bushed with insulated bushings.

§ 75.516 Power wires; support.

[STATUTORY PROVISION]

All power wires (except trailing cables on mobile equipment, specially designed cables conducting high-voltage power to underground rectifying equipment or transformers, or bare or insulated ground and return wires) shall be supported on well-insulated insulators and shall not contact combustible material, roof, or ribs.

§ 75.516–1 Installed insulators.

Well-insulated insulators is interpreted to mean well-installed insulators. Insulated J-hooks may be used to suspend insulated power cables

for temporary installation not exceeding 6 months and for permanent installation of control cables such as may be used along belt conveyors.

§ 75.516–2 Communication wires and cables; installation; insulation; support.

(a) All communication wires shall be supported on insulated hangers or insulated J-hooks.

(b) All communication cables shall be insulated as required by § 75.517–1, and shall either be supported on insulated or uninsulated hangers or J-hooks, or securely attached to messenger wires, or buried, or otherwise protected against mechanical damage in a manner approved by the Secretary or his authorized representative.

(c) All communication wires and cables installed in track entries shall, except when a communication cable is buried in accordance with paragraph (b) of this section, be installed on the side of the entry opposite to trolley wires and trolley feeder wires. Additional insulation shall be provided for communication circuits at points where they pass over or under any power conductor.

(d) For purposes of this section, communication cable means two or more insulated conductors covered by an additional abrasion-resistant covering.

[38 FR 4975, Feb. 23, 1973]

§ 75.517 Power wires and cables; insulation and protection.

[STATUTORY PROVISIONS]

Power wires and cables, except trolley wires, trolley feeder wires, and bare signal wires, shall be insulated adequately and fully protected.

§ 75.517–1 Power wires and cables; insulation and protection.

Power wires and cables installed on or after March 30, 1970, shall have insulation with a dielectric strength at least equal to the voltage of the circuit.

§ 75.517–2 Plans for insulation of existing bare power wires and cables.

(a) On or before December 31, 1970, plans for the insulation of existing bare power wires and cables installed prior to March 30, 1970, shall be filed with the District Manager of the Coal Mine Safety District in which the mine is located to permit approval and prompt implementation of such plans.

(b) The appropriate District Manager shall notify the operator in writing of the approval of a proposed insulation plan. If revisions are required for approval, the changes required will be specified.

(c) An insulation plan shall include the following information:

(1) Name and address of the company, the mine and the responsible officials;

(2) Map or diagram indicating location of power wires and cables required to be insulated;

(3) Total length of bare power wires and cables required to be insulated;

(4) Schedule for the replacement or insulation of bare power wires and cables;

(5) Type of insulation to be used and the voltage rating as indicated by the manufacturer.

(d) The District Manager shall be guided by the following criteria in approving insulation plans on a mine-by-mine basis. Insulation not conforming to these criteria may be approved provided the operator can satisfy the Mine Safety and Health Administration that the insulation will provide no less than the same measure of protection.

(1) Insulation shall be adequate for the applied voltage of the circuit.

(2) When tubing is used to insulate existing power wires and cables, it shall have a dielectric strength at least equal to the voltage of the circuit. When the tubing is split for purposes of installation, the joints shall be effectively sealed. The butt ends may be sealed with a moisture resistant insulating tape.

(3) When tape is used to insulate existing power wires and cables, it shall be applied half-lapped and one thickness of the tape shall have a dielectric strength at least equal to the voltage of the circuit. The tape shall be self-adhesive and moisture resistant.

§ 75.518 Electric equipment and circuits; overload and short circuit protection.

[STATUTORY PROVISION]

Automatic circuit-breaking devices or fuses of the correct type and capacity shall be installed so as to protect all electric equipment and circuits against short circuit and overloads. Three-phase motors on all electric equipment shall be provided with overload protection that will deenergize all three phases in the event that any phase is overloaded.

§ 75.518–1 Electric equipment and circuits; overload and short circuit protection; minimum requirements.

A device to provide either short circuit protection or protection against overload which does not conform to the provisions of the National Electric Code, 1968, does not meet the requirement of § 75.518. In addition, such devices on electric face equipment and trailing cables that are required to be permissible must meet the requirements of the applicable schedules of the Bureau of Mines.

§ 75.518–2 Incandescent lamps, overload and short circuit protection.

Incandescent lamps installed along haulageways and at other locations, not contacting combustible material, and powered from trolley or direct current feeder circuits, need not be provided with separate short circuit or overload protection, if the lamp is not more than 8 feet in distance from such circuits.

§ 75.519 Main power circuits; disconnecting switches.

[STATUTORY PROVISION]

In all main power circuits, disconnecting switches shall be installed underground within 500 feet of the bottoms of shafts and boreholes through which main power circuits enter the underground area of the mine and within 500 feet of all other places where main power circuits enter the underground area of the mine.

§ 75.519–1 Main power circuits; disconnecting switches; locations.

Section 75.519 requires (a) that a disconnecting switch be installed on the surface at a point within 500 feet of the place where the main power circuit enters the underground area of a mine, and (b) that, in an instance on which a main power circuit enters the underground area through a shaft or borehole, a disconnecting switch be installed underground within 500 feet of the bottom of the shaft or borehole.

§ 75.520 Electric equipment; switches.

[STATUTORY PROVISION]

All electric equipment shall be provided with switches or other controls that are safely designed, constructed, and installed.

§ 75.521 Lightning arresters; ungrounded and exposed power conductors and telephone wires.

Each ungrounded, exposed power conductor and each ungrounded, exposed telephone wire that leads underground shall be equipped with suitable lightning arresters of approved type within 100 feet of the point where the circuit enters the mine. Lightning arresters shall be connected to a low resistance grounding medium on the surface which shall be separated from neutral grounds by a distance of not less than 25 feet.

[38 FR 4975, Feb. 23, 1973]

§ 75.522 Lighting devices.

[STATUTORY PROVISION]

No device for the purpose of lighting any coal mine which has not been approved by the Secretary or his authorized representative shall be permitted in such mine.

§ 75.522–1 Incandescent and fluorescent lamps.

(a) Except for areas of a coal mine inby the last open crosscut, incandescent lamps may be used to illuminate underground areas. When incandescent lamps are used in a track entry or belt entry or near track entries to illuminate special areas other than structures, the lamps shall be installed in

weather-proof sockets located in positions such that the lamps will not come in contact with any combustible material. Lamps used in all other places must be of substantial construction and be fitted with a glass enclosure.

(b) Incandescent lamps within glass enclosures or fluorescent lamps may be used inside underground structures (except magazines used for the storage of explosives and detonators). In underground structures lighting circuits shall consist of cables installed on insulators or insulated wires installed in metallic conduit or metallic armor.

§ 75.523 Electric face equipment; deenergization.

[STATUTORY PROVISION]

An authorized representative of the Secretary may require in any mine that electric face equipment be provided with devices that will permit the equipment to be deenergized quickly in the event of an emergency.

§ 75.523–1 Deenergization of self-propelled electric face equipment installation requirements.

(a) Except as provided in paragraphs (b) and (c) of this section, all self-propelled electric face equipment which is used in the active workings of each underground coal mine on and after March 1, 1973, shall, in accordance with the schedule of time specified in paragraphs (a) (1) and (2) of this section, be provided with a device that will quickly deenergize the tramming motors of the equipment in the event of an emergency. The requirements of this paragraph (a) shall be met as follows:

(1) On and after December 15, 1974, for self-propelled cutting machines, shuttle cars, battery-powered machines, and roof drills and bolters;

(2) On and after February 15, 1975, for all other types of self-propelled electric face equipment.

(b) Self-propelled electric face equipment that is equipped with a substantially constructed cab which meets the requirements of this part, shall not be required to be provided with a device that will quickly deenergize the tramming motors of the equipment in the event of an emergency.

(c) An operator may apply to the Director of Technical Support, Mine Safety and Health Administration, Department of Labor, 1100 Wilson Blvd., Room 2329, Arlington, Virginia 22209–3939 for approval of the installation of devices to be used in lieu of devices that will quickly deenergize the tramming motors of self-propelled electric face equipment in the event of an emergency. The Director of Technical Support may approve such devices if he determines that the performance thereof will be no less effective than the performance requirements specified in § 75.523–2.

[38 FR 3407, Feb. 6, 1973, as amended at 39 FR 27557, July 30, 1974; 43 FR 12320, Mar. 24, 1978; 47 FR 28096, June 29, 1982; 67 FR 38386, June 4, 2002]

§ 75.523–2 Deenergization of self-propelled electric face equipment; performance requirements.

(a) Deenergization of the tramming motors of self-propelled electric face equipment, required by paragraph (a) of § 75.523–1, shall be provided by:

(1) Mechanical actuation of an existing pushbutton emergency stopswitch,

(2) Mechanical actuation of an existing lever emergency stopswitch, or

(3) The addition of a separate electromechanical switch assembly.

(b) The existing emergency stopswitch or additional switch assembly shall be actuated by a bar or lever which shall extend a sufficient distance in each direction to permit quick deenergization of the tramming motors of self-propelled electric face equipment from all locations from which the equipment can be operated.

(c) Movement of not more than 2 inches of the actuating bar or lever resulting from the application of not more than 15 pounds of force upon contact with any portion of the equipment operator's body at any point along the length of the actuating bar or lever shall cause deenergization of the tramming motors of the self-propelled electric face equipment.

[38 FR 3406, Feb. 6, 1973; 38 FR 4394, Feb. 14, 1973]

§ 75.523–3 Automatic emergency-parking brakes.

(a) Except for personnel carriers, rubber-tired, self-propelled electric haulage equipment used in the active workings of underground coal mines shall be equipped with automatic emergency-parking brakes in accordance with the following schedule.

(1) On and after May 23, 1989—

(i) All new equipment ordered; and

(ii) All equipment originally furnished with or retrofitted with automatic emergency-parking brakes which meet the requirements of this section.

(2) On and after May 23, 1991, all other equipment.

(b) Automatic emergency-parking brakes shall—

(1) Be activated immediately by the emergency deenergization device required by 30 CFR 75.523–1 and 75.523–2;

(2) Engage automatically within 5.0 seconds when the equipment is deenergized;

(3) Safely bring the equipment when fully loaded to a complete stop on the maximum grade on which it is operated;

(4) Hold the equipment stationary despite any contraction of brake parts, exhaustion of any non-mechanical source of energy, or leakage; and

(5) Release only by a manual control that does not operate any other equipment function.

(c) Automatic emergency-parking brakes shall include a means in the equipment operator's compartment to—

(1) Apply the brakes manually without deenergizing the equipment; and

(2) Release and reengage the brakes without energizing the equipment.

(d) On and after November 24, 1989, rubber-tired, self-propelled electric face equipment not covered by paragraph (a) of this section shall be equipped with a means incorporated on the equipment and operable from each tramming station to hold the equipment stationary—

(1) On the maximum grade on which it is operated; and

(2) Despite any contraction of components, exhaustion of any non-mechanical source of energy, or leakage.

(e) The brake systems required by paragraphs (a) or (d) of this section shall be applied when the equipment operator is not at the controls of the equipment, except during movement of disabled equipment.

[54 FR 12412, Mar. 24, 1989]

§ 75.524 Electric face equipment; electric equipment used in return air outby the last open crosscut; maximum level of alternating or direct electric current between frames of equipment.

The maximum level of alternating or direct electric current that exists between the frames of any two units of electric face equipment that come in contact with each other in the working places of a coal mine, or between the frames of any two units of electric equipment that come in contact with each other in return air outby the last open crosscut, shall not exceed one ampere as determined from the voltage measured across a 0.1 ohm resistor connected between the frames of such equipment.

[38 FR 29998, Oct. 31, 1973]

APPENDIX A TO SUBPART F OF PART 75—LIST OF PERMISSIBLE ELECTRIC FACE EQUIPMENT APPROVED BY THE BUREAU OF MINES PRIOR TO MAY 23, 1936

Motor-Driven Mine Equipment
(Approved Under Schedules 2, 2A, 2B, and 2C)

Approval No.	Date
AIR COMPRESSORS	
128	March 21, 1927.
128A	July 16, 1926.
COAL DRILLS AND DRILLING MACHINES	
Hand Drills	
109	September 19, 1922.
154	August 1, 1928.
184	February 7, 1930.
227	July 29, 1931.
254	July 15, 1933.
Post Drills	
119	April 15, 1925.
119A	Do.
225	July 10, 1931.
225A	Do.
228	August 12, 1931.
228A	February 17, 1932.
230	August 20, 1931.
230A	Do.
237	December 1, 1931.
237A	Do.

Motor-Driven Mine Equipment
(Approved Under Schedules 2, 2A, 2B, and 2C)

Approval No.	Date
Drilling Machines	
147	February 8, 1928.
147A	Do.
176	September 9, 1929.
176A	Do.
LOADING AND CONVEYING EQUIPMENT	
LOADING MACHINES	
Unmounted Type	
122	January 8, 1926.
122A	Do.
Caterpillar-Mounted Type	
150	May 11, 1928.
186	March 15, 1930.
222	May 8, 1931.
222A	July 28, 1931.
229	August 17, 1931.
229A	Do.
235	November 27, 1931.
235A	October 29, 1931.
278	January 17, 1935.
278A	Do.
283A	March 12, 1935.
284A	Do.
285A	Do.
294	September 18, 1935.
300A	May 6, 1936.
127	July 16, 1926.
127A	September 23, 1927.
Track-Mounted Type	
194	June 6, 1930.
194A	Do.
217	February 27, 1931.
217A	Do.
276	January 11, 1935.
277	January 17, 1935.
282A	March 12, 1935.
291A	July 3, 1935.
Pit-Car Loaders	
167	March 27, 1929.
167A	Do.
175	July 26, 1929.
175A	June 24, 1929.
250	December 10, 1932.
250A	Do.
252A	February 20, 1933.
CONVEYORS	
Belt Type	
236	November 19, 1931.
287A	March 12, 1935.
296A	January 6, 1936.
Chain Type	
151	May 19, 1928.
209	December 2, 1930.
240	March 12, 1932.
240A	Do.
298A	March 3, 1936.

Motor-Driven Mine Equipment
(Approved Under Schedules 2, 2A, 2B, and 2C)

Approval No.	Date
Power Units for Conveyors	
265	February 12, 1934.
265A	March 19, 1934.
390A	March 23, 1934.
Shaker Type	
247	October 21, 1932.
257A	August 11, 1933.
262A	December 8, 1933.
271	May 20, 1935.
271A	October 17, 1934.
274A	December 13, 1934.
286A	March 12, 1935.
295	September 20, 1935.
299A	April 9, 1936.
Scraper-type Loaders	
138	August 5, 1927.
138A	Do.
196	September 29, 1930.
196A	July 26, 1930.
226	July 27, 1931.
255	July 31, 1933.
256	Do.
MINING MACHINES, MACHINERY-MOVING EQUIPMENT, MISCELLANEOUS TRUCKS, AND WATER SPRAY SUPPLY UNITS	
MINING MACHINES	
Shortwall Machines	
103	November 2, 1917.
103A	Do.
105	February 9, 1922.
105A	Do.
106	Do.
106A	Do.
107	Do.
107A	Do.
108	Do.
108A	Do.
111	October 16, 1922.
111A	Do.
113	November 4, 1924.
113A	Do.
114	February 7, 1925.
114A	Do.
115	Do.
115A	Do.
153	July 31, 1928.
153A	Do.
193	June 3, 1930.
193A	Do.
197	July 31, 1930.
197A	Do.
198	August 1, 1930.
198A	Do.
201	September 8, 1930.
201A	Do.
204	October 13, 1930.
204A	December 13, 1930.
223	May 13, 1931.
223A	Do.
241	March 18, 1932.
241A	Do.
258	August 15, 1933.
259A	August 16, 1933.
260A	August 17, 1933.
273	November 30, 1934.

Motor-Driven Mine Equipment
(Approved Under Schedules 2, 2A, 2B, and 2C)

Approval No.	Date
288	March 27, 1935.
288A	Do.
292	September 11, 1935.
292A	Do.
293A	Do.
Longwall Machines	
185	February 24, 1930.
185A	Do.
218	March 10, 1931.
218A	Do.
246	August 19, 1932.
246A	Do.
261	September 12, 1933.
Track or caterpillar mounted	
112	March 13, 1924.
112A	Do.
118	March 12, 1925.
118A	Do.
125	April 26, 1926.
125A	Do.
172	April 30, 1929.
172A	Do.
188	April 15, 1930.
188A	Do.
207	November 14, 1930.
207A	Do.
216	February 12, 1931.
216A	Do.
231	August 31, 1931.
231A	Do.
242	April 7, 1932.
244	June 18, 1932.
244A	September 20, 1932.
253A	February 25, 1933.
267	June 27, 1934.
268A	July 25, 1934.
269A	September 24, 1934.
280A	March 4, 1935.
297	January 27, 1936.
297A	Do.
Mine Pumps	
140	November 1, 1927.
140A	Do.
143	Do.
143A	Do.
144	Do.
144A	Do.
199	August 18, 1930.
199A	Do.
208	November 29, 1930.
210	December 15, 1930.
210A	Do.
211	December 17, 1930.
211A	Do.
213	December 29, 1930.
213A	Do.
214	January 2, 1931.
214A	Do.
215	Do.
215A	Do.
248	October 31, 1932.
248A	November 23, 1932.
264	January 31, 1934.
264A	Do.
272	October 23, 1934.
272A	Do.

Motor-Driven Mine Equipment
(Approved Under Schedules 2, 2A, 2B, and 2C)

Approval No.	Date
Rock-Dusting Machines	
130	November 5, 1926.
137	July 2, 1927.
146	January 20, 1928.
146A	April 3, 1928.
180	October 30, 1929.
180A	January 17, 1930.
206	November 12, 1930.
279	February 14, 1935.
Room and Car-Spotting Hoists	
116	February 13, 1925.
116A	Do.
164	January 21, 1931.
164A	Do.
165	Do.
165A	Do.
169	April 5, 1929.
169A	February 26, 1934.
190	April 20, 1930.
251A	January 16, 1933.
263	January 11, 1934.
266A	February 27, 1934.

STORAGE-BATTERY LOCOMOTIVES AND POWER TRUCKS
(Approved under Schedules 15, 2C, 2D, and 2E)

Gathering Locomotives	
1501	October 11, 1921.
1502	November 13, 1922.
1503	March 24, 1923.
1505	April 5, 1924.
1507	August 20, 1925.
1508	March 21, 1925.
1509	September 25, 1925.
1511	November 10, 1925.
1512	November 11, 1925.
1513	February 25, 1926.
1516	December 28, 1926.
1517	February 10, 1927.
1520	May 27, 1929.
1521	June 13, 1930.
1522	September 12, 1930.
1523	December 19, 1930.
1525	July 25, 1934.
1526	December 20, 1935.
Tandem Locomotive	
1518	November 21, 1927.
Power Trucks	
1506	May 5, 1924.
1505A	June 21, 1926.
1510C	December 31, 1926.
1514	December 18, 1926.
1515	December 28, 1926.
1512C	September 13, 1928.
1519C	April 6, 1929.
1524C	June 25, 1934.

JUNCTION, DISTRIBUTION, AND SPLICE BOXES
(Approved under Schedules 2D and 2E)

Junction Boxes	
400	June 16, 1928.
400A	August 5, 1925.
401	May 11, 1927.

Motor-Driven Mine Equipment
(Approved Under Schedules 2, 2A, 2B, and 2C)

Approval No.	Date
401A	Do.
402	Do.
402A	Do.
403	April 14, 1931.
403A	Do.
405A	December 4, 1933.

Subpart G—Trailing Cables

§ 75.600 Trailing cables; flame resistance.

[STATUTORY PROVISIONS]

Trailing cables used in coal mines shall meet the requirements established by the Secretary for flame-resistant cables.

§ 75.600–1 Approved cables; flame resistance.

Cables shall be accepted or approved by MSHA as flame resistant.

[57 FR 61223, Dec. 23, 1992]

§ 75.601 Short circuit protection of trailing cables.

[STATUTORY PROVISIONS]

Short circuit protection for trailing cables shall be provided by an automatic circuit breaker or other no less effective device approved by the Secretary of adequate current-interrupting capacity in each ungrounded conductor. Disconnecting devices used to disconnect power from trailing cables shall be plainly marked and identified and such devices shall be equipped or designed in such a manner that it can be determined by visual observation that the power is disconnected.

§ 75.601–1 Short circuit protection; ratings and settings of circuit breakers.

Circuit breakers providing short circuit protection for trailing cables shall be set so as not to exceed the maximum allowable instantaneous settings specified in this section; however, higher settings may be permitted by an authorized representative of the Secretary when he has determined that special applications are justified:

Conductor size AWG or MGM	Maximum allowable circuit breaker instantaneous setting (amperes)
14	50
12	75
10	150
8	200
6	300
4	500
3	600
2	800
1	1,000
1/0	1,250
2/0	1,500
3/0	2,000
4/0	2,500
250	2,500
300	2,500
350	2,500
400	2,500
450	2,500
500	2,500

§ 75.601–2 Short circuit protection; use of fuses; approval by the Secretary.

Fuses shall not be employed to provide short circuit protection for trailing cables unless specifically approved by the Secretary.

§ 75.601–3 Short circuit protection; dual element fuses; current ratings; maximum values.

Dual element fuses having adequate current-interrupting capacity shall meet the requirements for short circuit protection of trailing cables as provided in § 75.601, however, the current ratings of such devices shall not exceed the maximum values specified in this section:

Conductor size (AWG or MGM)	Single conductor cable		Two conductor cable	
	Ampacity	Max. fuse rating	Ampacity	Max. fuse rating
14	.....	.....	15	15
12	.....	.....	20	20
10	.....	.....	25	25
8	60	60	50	50
6	85	90	65	70
4	110	110	90	90
3	130	150	105	110
2	150	150	120	125
1	170	175	140	150
1/0	200	200	170	175
2/0	235	250	195	200
3/0	275	300	225	225
4/0	315	350	260	300
250	350	350	285	300
300	395	400	310	350
350	445	450	335	350
400	480	500	360	400
450	515	600	385	400
500	545	600	415	450

§ 75.602 Trailing cable junctions.

[STATUTORY PROVISION]

When two or more trailing cables junction to the same distribution center, means shall be provided to assure against connecting a trailing cable to the wrong size circuit breaker.

§ 75.603 Temporary splice of trailing cable.

[STATUTORY PROVISION]

One temporary splice may be made in any trailing cable. Such trailing cable may only be used for the next 24-hour period. No temporary splice shall be made in a trailing cable within 25 feet of the machine, except cable reel equipment. Temporary splices in trailing cables shall be made in a workmanlike manner and shall be mechanically strong and well insulated. Trailing cables or hand cables which have exposed wires or which have splices that heat or spark under load shall not be used. As used in this section, the term ''splice'' means the mechanical joining of one or more conductors that have been severed.

§ 75.604 Permanent splicing of trailing cables.

[STATUTORY PROVISIONS]

When permanent splices in trailing cables are made, they shall be:

(a) Mechanically strong with adequate electrical conductivity and flexibility;

(b) Effectively insulated and sealed so as to exclude moisture; and

(c) Vulcanized or otherwise treated with suitable materials to provide flame-resistant qualities and good bonding to the outer jacket.

(d) Made using splice kits accepted or approved by MSHA as flame resistant.

[35 FR 17890, Nov. 20, 1970, as amended at 57 FR 61223, Dec. 23, 1992]

§ 75.605 Clamping of trailing cables to equipment.

[STATUTORY PROVISIONS]

Trailing cables shall be clamped to machines in a manner to protect the cables from damage and to prevent strain on the electrical connections.

§ 75.606 Protection of trailing cables.

[STATUTORY PROVISIONS]

Trailing cables shall be adequately protected to prevent damage by mobile equipment.

§ 75.607 Breaking trailing cable and power cable connections.

[STATUTORY PROVISIONS]

Trailing cable and power cable connections to junction boxes shall not be made or broken under load.

Subpart H—Grounding

§ 75.700 Grounding metallic sheaths, armors, and conduits enclosing power conductors.

[STATUTORY PROVISIONS]

All metallic sheaths, armors, and conduits enclosing power conductors shall be electrically continuous throughout and shall be grounded by methods approved by an authorized representative of the Secretary.

§ 75.700–1 Approved methods of grounding.

Metallic sheaths, armors and conduits in resistance grounded systems where the enclosed conductors are a part of the system will be approved if a solid connection is made to the neutral conductor; in all other systems, the following methods of grounding will be approved:

(a) A solid connection to a borehole casing having low resistance to earth;

(b) A solid connection to metal waterlines having low resistance to earth;

(c) A solid connection to a grounding conductor, other than the neutral conductor of a resistance grounded system, extending to a low resistance ground field located on the surface;

(d) Any other method of grounding, approved by an authorized representative of the Secretary, which ensures that there is no difference in potential between such metallic enclosures and the earth.

§ 75.701 Grounding metallic frames, casings, and other enclosures of electric equipment.

[STATUTORY PROVISIONS]

Metallic frames, casings, and other enclosures of electric equipment that can become ''alive'' through failure of insulation or by contact with energized parts shall be grounded by methods approved by an authorized representative of the Secretary.

§ 75.701–1 Approved methods of grounding of equipment receiving power from ungrounded alternating current power systems.

For purposes of grounding metallic frames, casings and other enclosures of equipment receiving power from ungrounded alternating current power systems, the following methods of grounding will be approved:

(a) A solid connection between the metallic frame, casing, or other metal enclosure and the grounded metallic sheath, armor, or conduit enclosing the power conductor feeding the electrical equipment enclosed;

(b) A solid connection to a borehole casing having low resistance to earth;

(c) A solid connection to metal waterlines having low resistance to earth;

(d) A solid connection to a grounding conductor extending to a low resistance ground field located on the surface;

(e) Any other method of grounding, approved by an authorized representative of the Secretary, which ensures that there is no difference in potential between such metal enclosures and the earth.

§ 75.701–2 Approved method of grounding metallic frames, casings and other enclosures receiving power from single-phase 110–220-volt circuit.

In instances where single-phase 110–220-volt circuits are used to feed electrical equipment, the only method of grounding that will be approved is the connection of all metallic frames, casings and other enclosures of such equipment to a separate grounding conductor which establishes a continuous connection to a grounded center tap of the transformer.

§ 75.701–3 Approved methods of grounding metallic frames, casings and other enclosures of electric equipment receiving power from direct current power systems with one polarity grounded.

For the purpose of grounding metallic frames, casings and enclosures of any electric equipment or device-receiving power from a direct-current power system with one polarity grounded, the following methods of grounding will be approved:

(a) A solid connection to the mine track;

(b) A solid connection to the grounded power conductor of the system;

(c) Silicon diode grounding; however, this method shall be employed only when such devices are installed in accordance with the requirements set forth in paragraph (d) of § 75.703–3; and

(d) Any other method, approved by an authorized representative of the Secretary, which insures that there is no difference in potential between such metal enclosures and the earth.

§ 75.701–4 Grounding wires; capacity of wires.

Where grounding wires are used to ground metallic sheaths, armors, conduits, frames, casings, and other metallic enclosures, such grounding wires will be approved if:

(a) The cross-sectional area (size) of the grounding wire is at least one-half the cross-sectional area (size) of the power conductor where the power conductor used is No. 6 A.W.G., or larger.

(b) Where the power conductor used is less than No. 6 A.W.G., the cross-sectional area (size) of the grounding wire is equal to the cross-sectional area (size) of the power conductor.

§ 75.701–5 Use of grounding connectors.

The attachment of grounding wires to a mine track or other grounded power conductor will be approved if separate clamps, suitable for such purpose, are used and installed to provide a solid connection.

§ 75.702 Protection other than grounding.

[STATUTORY PROVISIONS]

Methods other than grounding which provide no less effective protection may be permitted by the Secretary or his authorized representative.

§ 75.702–1 Protection other than grounding; approved by an authorized representative of the Secretary.

Under this subpart no method other than grounding may be used to ensure against a difference in potential between metallic sheaths, armors and conduits, enclosing power conductors and frames, casings and metal enclosures of electric equipment, and the earth, unless approved by an authorized representative of the Secretary.

§ 75.703 Grounding offtrack direct-current machines and the enclosures of related detached components.

[STATUTORY PROVISIONS]

The frames of all offtrack direct-current machines and the enclosures of related detached components shall be effectively grounded, or otherwise maintained at no less safe voltages, by methods approved by an authorized representative of the Secretary.

§ 75.703–1 Approved method of grounding.

In instances where the metal frames both of an offtrack direct-current machine and of the metal frames of its component parts are grounded to the same grounding medium the requirements of § 75.703 will be met.

§ 75.703–2 Approved grounding mediums.

For purposes of grounding offtrack direct-current machines, the following grounding mediums are approved:

(a) The grounded polarity of the direct-current power system feeding such machines; or,

(b) The alternating current grounding medium where such machines are fed by an ungrounded direct-current power system originating in a portable rectifier receiving its power from a section power center. However, when such a medium is used, a separate grounding conductor must be employed.

§ 75.703–3 Approved methods of grounding offtrack mobile, portable and stationary direct-current machines.

In grounding offtrack direct-current machines and the enclosures of their component parts, the following methods of grounding will meet the requirements of § 75.703:

(a) The use of a separate grounding conductor located within the trailing cable of mobile and portable equipment and connected between such equipment and the direct-current grounding medium;

(b) The use of a separate ground conductor located within the direct-current power cable feeding stationary equipment and connected between such stationary equipment and the direct-current grounding medium;

(c) The use of a separate external ground conductor connected between stationary equipment and the direct-current grounding medium; or,

(d) The use of silicon diodes; however, the installation of such devices shall meet the following minimum requirements:

(1) Installation of silicon diodes shall be restricted to electric equipment receiving power from a direct-current system with one polarity grounded;

(2) Where such diodes are used on circuits having a nominal voltage rating of 250, they must have a forward current rating of 400 amperes or more, and have a peak inverse voltage rating of 400 or more;

(3) Where such diodes are used on circuits having a nominal voltage rating of 550, they must have a forward current rating of 250 amperes or more, and have a peak inverse voltage rating of 800 or more;

(4) Where fuses approved by the Secretary are used at the outby end of a trailing cable connected to electrical equipment employing silicon diodes, the rating of such fuses must not exceed 150 percent of the nominal current rating of the grounding diodes;

(5) Where circuit breakers are used at the outby end of a trailing cable connected to electrical equipment employing silicon diodes, the instantaneous

trip setting shall not exceed 300 percent of the nominal current rating of the grounding diode;

(6) Overcurrent devices must be used and installed in such a manner that the operating coil circuit of the main contactor will open when a fault current with a value of 25 percent or less of the diode rating flows through the diode;

(7) The silicon diode installed must be suitable to the grounded polarity of the power system in which it is used and its threaded base must be solidly connected to the machine frame on which it is installed;

(8) In addition to the grounding diode, a polarizing diode must be installed in the machine control circuit to prevent operation of the machine when the polarity of a trailing cable is reversed;

(9) When installed on permissible equipment, all grounding diodes, overcurrent devices, and polarizing diodes must be placed in explosion proof compartments;

(10) When grounding diodes are installed on a continuous miner, their nominal diode current rating must be at least 750 amperes or more; and,

(11) All grounding diodes shall be tested, examined and maintained as electrical equipment in accordance with the provisions of § 75.512.

§ 75.703–4 Other methods of protecting offtrack direct-current equipment; approved by an authorized representative of the Secretary.

Other methods of maintaining safe voltage by preventing a difference between the frames of offtract direct-current machines and the earth must be approved by an authorized representative of the Secretary.

§ 75.704 Grounding frames of stationary high-voltage equipment receiving power from ungrounded delta systems.

[STATUTORY PROVISIONS]

The frames of all stationary high-voltage equipment receiving power from ungrounded delta systems shall be grounded by methods approved by an authorized representative of the Secretary.

§ 75.704–1 Approved methods of grounding.

The methods of grounding stated in § 75.701–1 will also be approved with respect to the grounding of frames of high-voltage equipment referred to in § 75.704.

§ 75.705 Work on high-voltage lines; deenergizing and grounding.

[STATUTORY PROVISIONS]

High-voltage lines, both on the surface and underground, shall be deenergized and grounded before work is performed on them, except that repairs may be permitted, in the case of energized surface high-voltage lines, if such repairs are made by a qualified person in accordance with procedures and safeguards, including, but not limited to, a requirement that the operator of such mine provide, test, and maintain protective devices in making such repairs, to be prescribed by the Secretary prior to March 30, 1970.

§ 75.705–1 Work on high-voltage lines.

(a) Section 75.705 specifically prohibits work on energized high-voltage lines underground;

(b) No high-voltage line, either on the surface or underground, shall be regarded as deenergized for the purpose of performing work on it, until it has been determined by a qualified person (as provided in § 75.153) that such high-voltage line has been deenergized and grounded. Such qualified person shall by visual observation (1) determine that the disconnecting devices on the high-voltage circuit are in open position and (2) ensure that each ungrounded conductor of the high-voltage circuit upon which work is to be done is properly connected to the system-grounding medium. In the case of resistance grounded or solid wye-connected systems, the neutral wire is the system-grounding medium. In the case of an ungrounded power system, either the steel armor or conduit enclosing the system or a surface grounding field is a system grounding medium;

(c) No work shall be performed on any high-voltage line on the surface which is supported by any pole or structure which also supports other high-voltage lines until: (1) All lines

supported on the pole or structure are deenergized and grounded in accordance with all of the provisions of this section which apply to the repair of energized surface high-voltage lines; or (2) the provisions of §§ 75.705–2 through 75.705–10 have been complied with, with respect to all lines, which are supported on the pole or structure.

(d) Work may be performed on energized surface high-voltage lines only in accordance with the provisions of §§ 75.705–2 through 75.705–10, inclusive.

§ 75.705–2 Repairs to energized surface high-voltage lines.

An energized high-voltage surface line may be repaired only when

(a) The operator has determined that:

(1) Such repairs cannot be scheduled during a period when the power circuit could be properly deenergized and grounded;

(2) Such repairs will be performed on power circuits with a phase-to-phase nominal voltage no greater than 15,000 volts;

(3) Such repairs on circuits with a phase-to-phase nominal voltage of 5,000 volts or more will be performed only with the use of live line tools;

(4) Weather conditions will not interfere with such repairs or expose those persons assigned to such work to an imminent danger; and

(b) The operator has designated a person qualified under the provisions of § 75.154 as the person responsible for carrying out such repairs and such person, in order to ensure protection for himself and other qualified persons assigned to perform such repairs from the hazards of such repair, has prepared and filed with the operator:

(1) A general description of the nature and location of the damage or defect to be repaired;

(2) The general plan to be followed in making such repairs;

(3) A statement that a briefing of all qualified persons assigned to make such repairs was conducted informing them of the general plan, their individual assignments, and the dangers inherent in such assignments;

(4) A list of the proper protective equipment and clothing that will be provided; and

(5) Such other information as the person designated by the operator feels necessary to describe properly the means or methods to be employed in such repairs.

§ 75.705–3 Work on energized high-voltage surface lines; reporting.

Any operator designating and assigning qualified persons to perform repairs on energized high-voltage surface lines under the provisions of § 75.705–2 shall maintain a record of such repairs. Such record shall contain a notation of the time, date, location, and general nature of the repairs made, together with a copy of the information filed with the operator by the qualified person designated as responsible for performing such repairs.

§ 75.705–4 Simultaneous repairs.

When two or more persons are working on an energized high-voltage surface line simultaneously, and any one of them is within reach of another, such persons shall not be allowed to work on different phases or on equipment with different potentials.

§ 75.705–5 Installation of protective equipment.

Before repair work on energized high-voltage surface lines is begun, protective equipment shall be used to cover all bare conductors, ground wires, guys, telephone lines, and other attachments in proximity to the area of planned repairs. Such protective equipment shall be installed from a safe position below the conductors or other apparatus being covered. Each rubber protective device employed in the making of repairs shall have a dielectric strength of 20,000 volts, or more.

§ 75.705–6 Protective clothing; use and inspection.

All persons performing work on energized high-voltage surface lines shall wear protective rubber gloves, sleeves, and climber guards if climbers are worn. Protective rubber gloves shall not be worn wrong side out or without protective leather gloves. Protective devices worn by a person assigned to perform repairs on high-voltage surface lines shall be worn continuously from the time he leaves the ground until he

returns to the ground, and, if such devices are employed for extended periods, such person shall visually inspect the equipment assigned him for defects before each use and, in no case, less than twice each day.

§ 75.705–7 Protective equipment; inspection.

Each person shall visually inspect protective equipment and clothing provided him in connection with work on high-voltage surface lines before using such equipment and clothing, and any equipment or clothing containing any defect or damage shall be discarded and replaced with proper protective equipment or clothing prior to the performance of any electrical work on such lines.

§ 75.705–8 Protective equipment; testing and storage.

(a) All rubber protective equipment used on work on energized high-voltage surface lines shall be electrically tested by the operator in accordance with ASTM standards, Part 28, published February 1968, and such testing shall be conducted in accordance with the following schedule:

(1) Rubber gloves, once each month;

(2) Rubber sleeves, once every 3 months;

(3) Rubber blankets, once every 6 months;

(4) Insulator hoods and line hose, once a year; and

(5) Other electric protective equipment, once a year.

(b) Rubber gloves shall not be stored wrong side out. Blankets shall be rolled when not in use, and line hose and insulator hoods shall be stored in their natural position and shape.

§ 75.705–9 Operating disconnecting or cutout switches.

Disconnecting or cutout switches on energized high-voltage surface lines shall be operated only with insulated sticks, fuse tongs, or pullers which are adequately insulated and maintained to protect the operator from the voltage to which he is exposed. When such switches are operated from the ground, the person operating such devices shall wear protective rubber gloves.

§ 75.705–10 Tying into energized high-voltage surface circuits.

If the work of forming an additional circuit by tying into an energized high-voltage surface line is performed from the ground, any person performing such work must wear and employ all of the protective equipment and clothing required under the provisions of §§ 75.705–5 and 75.705–6. In addition, the insulated stick used by such person must have been designed for such purpose and must be adequately insulated and be maintained to protect such person from the voltage to which he is exposed.

§ 75.705–11 Use of grounded messenger wires; ungrounded systems.

Solely for purposes of grounding ungrounded high-voltage power systems, grounded messenger wires used to suspend the cables of such systems may be used as a grounding medium.

§ 75.706 Deenergized underground power circuits; idle days—idle shifts.

[STATUTORY PROVISIONS]

When not in use, power circuits underground shall be deenergized on idle days and idle shifts, except that rectifiers and transformers may remain energized.

Subpart I—Underground High-Voltage Distribution

§ 75.800 High-voltage circuits; circuit breakers.

[STATUTORY PROVISIONS]

High-voltage circuits entering the underground area of any coal mine shall be protected by suitable circuit breakers of adequate interrupting capacity which are properly tested and maintained as prescribed by the Secretary. Such breakers shall be equipped with devices to provide protection against under-voltage grounded phase, short circuit, and overcurrent.

§ 75.800–1 Circuit breakers; location.

Circuit breakers protecting high-voltage circuits entering an underground area of any coal mine shall be located on the surface and in no case

installed either underground or within a drift.

§ 75.800–2 Approved circuit schemes.

The following circuit schemes will be regarded as providing the necessary protection to the circuits required by § 75.800:

(a) Ground check relays may be used for undervoltage protection if the relay coils are designed to trip the circuit breaker when line voltage decreases to 40 percent to 60 percent of the nominal line voltage;

(b) Ground trip relays on resistance grounded systems will be acceptable as grounded phase protection;

(c) One circuit breaker may be used to protect two or more branch circuits, if the circuit breaker is adjusted to afford overcurrent protection for the smallest conductor.

§ 75.800–3 Testing, examination and maintenance of circuit breakers; procedures.

(a) Circuit breakers and their auxiliary devices protecting underground high-voltage circuits shall be tested and examined at least once each month by a person qualified as provided in § 75.153;

(b) Tests shall include: (1) Breaking continuity of the ground check conductor, where ground check monitoring is used; and

(2) Actuating at least two (2) of the auxiliary protective relays.

(c) Examination shall include visual observation of all components of the circuit breaker and its auxiliary devices, and such repairs or adjustments as are indicated by such tests and examinations shall be carried out immediately.

§ 75.800–4 Testing, examination, and maintenance of circuit breakers; record.

(a) *Recordkeeping*. The operator shall make a record of each test, examination, repair, or adjustment of all circuit breakers protecting high-voltage circuits which enter any underground area of the mine.

(b) *Record security*. These records shall be made in a secure book that is not susceptible to alteration or electronically in a computer system so as to be secure and not susceptible to alteration.

(c) *Retention and access*. These records shall be retained at a surface location at the mine for at least one year and shall be made available to authorized representatives of the Secretary, the representative of miners, and other interested persons.

[64 FR 43287, Aug. 10, 1999]

§ 75.801 Grounding resistors.

[STATUTORY PROVISIONS]

The grounding resistor, where required, shall be of the proper ohmic value to limit the voltage drop in the grounding circuit external to the resistor to not more than 100 volts under fault conditions. The grounding resistor shall be rated for maximum fault current continuously and insulated from ground for a voltage equal to the phase-to-phase voltage of the system.

§ 75.802 Protection of high-voltage circuits extending underground.

(a) Except as provided in paragraph (b) of this section, high-voltage circuits extending underground and supplying portable, mobile, or, stationary high-voltage equipment shall contain either a direct or derived neutral which shall be grounded through a suitable resistor at the source transformers, and a grounding circuit, originating at the grounded side of the grounding resistor, shall extend along with the power conductors and serve as a grounding conductor for the frames of all high-voltage equipment supplied power from that circuit.

(b) Notwithstanding the requirements of paragraph (a) of this section, the Secretary or his authorized representative may permit ungrounded high-voltage circuits to be extended underground to feed stationary electric equipment if:

(1) Such circuits are either steel armored or installed in grounded, rigid steel conduit throughout their entire length; or,

(2) The voltage of such circuits is nominally 2,400 volts or less phase-to-phase and the cables used in such circuits are equipped with metallic shields around each power conductor,

and contain one or more ground conductors having a total cross sectional area of not less than one-half the power conductor; and,

(3) Upon a finding by the Secretary or his authorized representative that the use of the circuits described in paragraphs (b) (1) and (2) of this section does not pose a hazard to the miners.

(c) Within 100 feet of the point on the surface where high-voltage circuits enter the underground portion of the mine, disconnecting devices shall be installed and so equipped or designed in such a manner that it can be determined by visual observation that the power is disconnected, except that the Secretary or his authorized representative may permit such devices to be installed at a greater distance from such area of the mine if he determines, based on existing physical conditions, that such installation will be more accessible at a greater distance and will not pose any hazard to the miners.

[38 FR 4975, Feb. 23, 1973]

§ 75.803 Fail safe ground check circuits on high-voltage resistance grounded systems.

[STATUTORY PROVISIONS]

On and after September 30, 1970, high-voltage, resistance grounded systems shall include a fail safe ground check circuit to monitor continuously the grounding circuit to assure continuity and the fail safe ground check circuit shall cause the circuit breaker to open when either the ground or pilot check wire is broken, or other no less effective device approved by the Secretary or his authorized representative to assure such continuity, except that an extension of time, not in excess of 12 months, may be permitted by the Secretary on a mine-by-mine basis if he determines that such equipment is not available.

§ 75.803–1 Maximum voltage ground check circuits.

The maximum voltage used for ground check circuits under § 75.803 shall not exceed 96 volts.

§ 75.803–2 Ground check systems not employing pilot check wires; approval by the Secretary.

Ground check systems not employing pilot check wires will be approved only if it is determined that the system includes a fail safe design causing the circuit breaker to open when ground continuity is broken.

§ 75.804 Underground high-voltage cables.

(a) Underground high-voltage cables used in resistance grounded systems shall be equipped with metallic shields around each power conductor with one or more ground conductors having a total cross sectional area of not less than one-half the power conductor, and with an insulated external conductor not smaller than No. 8 (A.W.G.) or an insulated internal ground check conductor not smaller than No. 10 (A.W.G.) for the ground continuity check circuit.

(b) All such cables shall be adequate for the intended current and voltage. Splices made in such cables shall provide continuity of all components.

[38 FR 4976, Feb. 23, 1973]

§ 75.805 Couplers.

[STATUTORY PROVISIONS]

Couplers that are used with medium-voltage or high-voltage power circuits shall be of the three-phase type with a full metallic shell, except that the Secretary may permit, under such guidelines as he may prescribe, no less effective couplers constructed of materials other than metal. Couplers shall be adequate for the voltage and current expected. All exposed metal on the metallic couplers shall be grounded to the ground conductor in the cable. The coupler shall be constructed so that the ground check continuity conductor shall be broken first and the ground conductors shall be broken last when the coupler is being uncoupled.

§ 75.806 Connection of single-phase loads.

[STATUTORY PROVISIONS]

Single-phase loads, such as transformer primaries, shall be connected phase-to-phase.

§ 75.807 Installation of high-voltage transmission cables.

[STATUTORY PROVISIONS]

All underground high-voltage transmission cables shall be installed only in regularly inspected air courses and haulageways, and shall be covered, buried, or placed so as to afford protection against damage, guarded where men regularly work or pass under them unless they are 6½ feet or more above the floor or rail, securely anchored, properly insulated, and guarded at ends, and covered, insulated, or placed to prevent contact with trolley wires and other low-voltage circuits.

§ 75.808 Disconnecting devices.

[STATUTORY PROVISIONS]

Disconnecting devices shall be installed at the beginning of branch lines in high-voltage circuits and equipped or designed in such a manner that it can be determined by visual observation that the circuit is deenergized when the switches are open.

§ 75.809 Identification of circuit breakers and disconnecting switches.

[STATUTORY PROVISIONS]

Circuit breakers and disconnecting switches underground shall be marked for identification.

§ 75.810 High-voltage trailing cables; splices.

[STATUTORY PROVISIONS]

In the case of high-voltage cables used as trailing cables, temporary splices shall not be used and all permanent splices shall be made in accordance with § 75.604. Terminations and splices in all other high-voltage cables shall be made in accordance with the manufacturer's specifications.

§ 75.811 High-voltage underground equipment; grounding.

[STATUTORY PROVISIONS]

Frames, supporting structures and enclosures of stationary, portable, or mobile underground high-voltage equipment and all high-voltage equipment supplying power to such equipment receiving power from resistance grounded systems shall be effectively grounded to the high-voltage ground.

§ 75.812 Movement of high-voltage power centers and portable transformers; permit.

[STATUTORY PROVISIONS]

Power centers and portable transformers shall be deenergized before they are moved from one location to another, except that, when equipment powered by sources other than such centers or transformers is not available, the Secretary may permit such centers and transformers to be moved while energized, if he determines that another equivalent or greater hazard may otherwise be created, and if they are moved under the supervision of a qualified person, and if such centers and transformers are examined prior to such movement by such person and found to be grounded by methods approved by an authorized representative of the Secretary and otherwise protected from hazards to the miner. A record shall be kept of such examinations. High-voltage cables, other than trailing cables, shall not be moved or handled at any time while energized, except that, when such centers and transformers are moved while energized as permitted under this section, energized high-voltage cables attached to such centers and transformers may be moved only by a qualified person and the operator of such mine shall require that such person wear approved and tested insulated wireman's gloves.

[35 FR 17890, Nov. 20, 1970, as amended at 60 FR 33723, June 29, 1995]

§ 75.812–1 Qualified person.

A person who meets the requirements of § 75.153 is a qualified person within the meaning of § 75.812.

§ 75.812–2 High-voltage power centers and transformers; record of examination.

The operator shall maintain a record of all examinations conducted in accordance with § 75.812. Such record shall be kept in a book approved by the Secretary.

HIGH-VOLTAGE LONGWALLS

SOURCE: 67 FR 11001, Mar. 11, 2002, unless otherwise noted.

§ 75.813 High-voltage longwalls; scope.

Sections 75.814 through 75.822 of this part are electrical safety standards that apply to high-voltage longwall circuits and equipment. All other existing standards in 30 CFR must also apply to these longwall circuits and equipment where appropriate.

§ 75.814 Electrical protection.

(a) High-voltage circuits must be protected against short circuits, overloads, ground faults, and undervoltages by circuit-interrupting devices of adequate interrupting capacity as follows:

(1) Current settings of short-circuit protective devices must not exceed the setting specified in approval documentation, or seventy-five percent of the minimum available phase-to-phase short-circuit current, whichever is less.

(2) Time-delay settings of short-circuit protective devices used to protect any cable extending from the section power center to a motor-starter enclosure must not exceed the settings specified in approval documentation, or 0.25-second, whichever is less. Time delay settings of short-circuit protective devices used to protect motor and shearer circuits must not exceed the settings specified in approval documentation, or 3 cycles, whichever is less.

(3) Ground-fault currents must be limited by a neutral grounding resistor to not more than—

(i) 6.5 amperes when the nominal voltage of the power circuit is 2,400 volts or less; or

(ii) 3.75 amperes when the nominal voltage of the power circuit exceeds 2,400 volts.

(4) High-voltage circuits extending from the section power center must be provided with—

(i) Ground-fault protection set to cause deenergization at not more than 40 percent of the current rating of the neutral grounding resistor;

(ii) A backup ground-fault detection device to cause deenergization when a ground fault occurs with the neutral grounding resistor open; and

(iii) Thermal protection for the grounding resistor that will deenergize the longwall power center if the resistor is subjected to a sustained ground fault. The thermal protection must operate at either 50 percent of the maximum temperature rise of the grounding resistor, or 150 °C (302 °F), whichever is less, and must open the ground-wire monitor circuit for the high-voltage circuit supplying the section power center. The thermal protection must not be dependent upon control power and may consist of a current transformer and overcurrent relay.

(5) High-voltage motor and shearer circuits must be provided with instantaneous ground-fault protection set at not more than 0.125-ampere.

(6) Time-delay settings of ground-fault protective devices used to provide coordination with the instantaneous ground-fault protection of motor and shearer circuits must not exceed 0.25-second.

(7) Undervoltage protection must be provided by a device which operates on loss of voltage to cause and maintain the interruption of power to a circuit to prevent automatic restarting of the equipment.

(b) Current transformers used for the ground-fault protection specified in paragraphs (a)(4)(i) and (5) of this section must be single window-type and must be installed to encircle all three phase conductors. Equipment safety grounding conductors must not pass through or be connected in series with ground-fault current transformers.

(c) Each ground-fault current device specified in paragraphs (a)(4)(i) and (5) of this section must be provided with a test circuit that will inject a primary current of 50 percent or less of the current rating of the grounding resistor through the current transformer and

cause each corresponding circuit-interrupting device to open.

(d) Circuit-interrupting devices must not reclose automatically.

(e) Where two or more high-voltage cables are used to supply power to a common bus in a high-voltage enclosure, each cable must be provided with ground-wire monitoring. The ground-wire monitoring circuits must cause deenergization of each cable when either the ground-monitor or grounding conductor(s) of any cable become severed or open. On or after May 10, 2002, parallel connected cables on newly installed longwalls must be protected as follows:

(1) When one circuit-interrupting device is used to protect parallel connected cables, the circuit-interrupting device must be electrically interlocked with the cables so that the device will open when any cable is disconnected; or

(2) When two or more parallel circuit-interrupting devices are used to protect parallel connected cables, the circuit-interrupting devices must be mechanically and electrically interlocked. Mechanical interlocking must cause all devices to open simultaneously and electrical interlocking must cause all devices to open when any cable is disconnected.

§ 75.815 Disconnect devices.

(a) The section power center must be equipped with a main disconnecting device installed to deenergize all cables extending to longwall equipment when the device is in the ''open'' position. See Figures I-1 and I-2 in Appendix A to this subpart I.

(b) Disconnecting devices for motor-starter enclosures must be maintained in accordance with the approval requirements of paragraph (f) of § 18.53 of part 18 of this chapter. The compartment for the disconnect device must be provided with a caution label to warn miners against entering the compartment before deenergizing the incoming high-voltage circuits to the compartment.

(c) Disconnecting devices must be rated for the maximum phase-to-phase voltage of the circuit in which they are installed, and for the full-load current of the circuit that is supplied power through the device.

(d) Each disconnecting device must be designed and installed so that—

(1) Visual observation determines that the contacts are open without removing any cover;

(2) All load power conductors can be grounded when the device is in the ''open'' position; and

(3) The device can be locked in the ''open'' position.

(e) Disconnecting devices, except those installed in explosion-proof enclosures, must be capable of interrupting the full-load current of the circuit or designed and installed to cause the current to be interrupted automatically prior to the opening of the contacts of the device. Disconnecting devices installed in explosion-proof enclosures must be maintained in accordance with the approval requirements of paragraph (f)(2)(iv) of § 18.53 of part 18 of this chapter.

§ 75.816 Guarding of cables.

(a) High-voltage cables must be guarded at the following locations:

(1) Where persons regularly work or travel over or under the cables.

(2) Where the cables leave cable handling or support systems to extend to electric components.

(b) Guarding must minimize the possibility of miners contacting the cables and protect the cables from damage. The guarding must be made of grounded metal or nonconductive flame-resistant material.

§ 75.817 Cable handling and support systems.

Longwall mining equipment must be provided with cable-handling and support systems that are constructed, installed and maintained to minimize the possibility of miners contacting the cables and to protect the high-voltage cables from damage.

§ 75.818 Use of insulated cable handling equipment.

(a) Energized high-voltage cables must not be handled except when motor or shearer cables need to be trained. When cables need to be trained, high-voltage insulated gloves, mitts, hooks, tongs, slings, aprons, or

other personal protective equipment capable of providing protection against shock hazard must be used to prevent direct contact with the cable.

(b) High-voltage insulated gloves, sleeves, and other insulated personal protective equipment must—

(1) Have a voltage rating of at least Class 1 (7,500 volts) that meets or exceeds ASTM F496–97, ''Standard Specification for In-Service Care of Insulating Gloves and Sleeves'' (1997).

(2) Be examined before each use for visible signs of damage;

(3) Be removed from the underground area of the mine or destroyed when damaged or defective; and

(4) Be electrically tested every 6 months in accordance with publication ASTM F496–97. ASTM F496–97 (Standard Specification for In-Service Care of Insulating Gloves and Sleeves, 1997) is incorporated by reference and may be inspected at any MSHA Coal Mine Safety and Health district office, or at MSHA's Office of Standards, Regulations, and Variances, 1100 Wilson Blvd., Room 2352, Arlington, Virginia 22209–3939, and at the National Archives and Records Administration (NARA). For information on the availability of this material at NARA, call 202–741–6030, or go to: *http://www.archives.gov/federal_register/code_of_federal_regulations/ibr_locations.html*. In addition, copies of the document can be purchased from the American Society for Testing and Materials, 100 Barr Harbor Drive, West Conshohocken, Pennsylvania 19428–2959. This incorporation by reference was approved by the Director of the Federal Register in accordance with 5 U.S.C. 552(a) and 1 CFR part 51.

[67 FR 11001, Mar. 11, 2002, as amended at 67 FR 38386, June 4, 2002; 71 FR 16668, Apr. 3, 2006]

§ 75.819 Motor-starter enclosures; barriers and interlocks.

Compartment separation and cover interlock switches for motor-starter enclosures must be maintained in accordance with the approval requirements of paragraphs (a) and (b) of § 18.53 of part 18 of this chapter.

§ 75.820 Electrical work; troubleshooting and testing.

(a) Electrical work on all circuits and equipment associated with high-voltage longwalls must be performed only by persons qualified under § 75.153 to perform electrical work on all circuits and equipment.

(b) Prior to performing electrical work, except for troubleshooting and testing of energized circuits and equipment as provided for in paragraph (d) of this section, a qualified person must do the following:

(1) Deenergize the circuit or equipment with a circuit-interrupting device.

(2) Open the circuit disconnecting device. On high-voltage circuits, ground the power conductors until work on the circuit is completed.

(3) Lock out the disconnecting device with a padlock. When more than one qualified person is performing work, each person must install an individual padlock.

(4) Tag the disconnecting device to identify each person working and the circuit or equipment on which work is being performed.

(c) Each padlock and tag must be removed only by the person who installed them, except that, if that person is unavailable at the mine, the lock and tag may be removed by a person authorized by the operator, provided—

(1) The authorized person is qualified under paragraph (a) of this section; and

(2) The operator ensures that the person who installed the lock and tag is aware of the removal before that person resumes work on the affected circuit or equipment.

(d) Troubleshooting and testing of energized circuits must be performed only—

(1) On low- and medium-voltage circuits;

(2) When the purpose of troubleshooting and testing is to determine voltages and currents; and

(3) By persons qualified to perform electrical work and who wear protective gloves on circuits that exceed 40 volts in accordance with the following table:

Circuit voltage	Type of glove required
Greater than 120 volts (nominal) (not intrinsically safe)	Rubber insulating gloves with leather protectors.
40 volts to 120 volts (nominal) (both intrinsically safe and non-intrinsically safe).	Either rubber insulating gloves with leather protectors or dry work gloves.
Greater than 120 volts (nominal) (intrinsically safe)	Either rubber insulating gloves with leather protectors or dry work gloves.

(4) Rubber insulating gloves must be rated at least for the nominal voltage of the circuit when the voltage of the circuit exceeds 120 volts nominal and is not intrinsically safe.

(e) Before troubleshooting and testing a low- or medium-voltage circuit contained in a compartment with a high-voltage circuit, the high-voltage circuit must be deenergized, disconnected, grounded, locked out and tagged in accordance with paragraph (b) of this section.

(f) Prior to the installation or removal of conveyor belt structure, high-voltage cables extending from the section power center to longwall equipment and located in the belt entries must be:

(1) Deenergized; or

(2) Guarded in accordance with § 75.816 of this part, at the location where the belt structure is being installed or removed; or

(3) Located at least 6.5 feet above the mine floor.

§ 75.821 Testing, examination and maintenance.

(a) At least once every 7 days, a person qualified in accordance with § 75.153 to perform electrical work on all circuits and equipment must test and examine each unit of high-voltage longwall equipment and circuits to determine that electrical protection, equipment grounding, permissibility, cable insulation, and control devices are being properly maintained to prevent fire, electrical shock, ignition, or operational hazards from existing on the equipment. Tests must include activating the ground-fault test circuit as required by § 75.814(c).

(b) Each ground-wire monitor and associated circuits must be examined and tested at least once each 30 days to verify proper operation and that it will cause the corresponding circuit-interrupting device to open.

(c) When examinations or tests of equipment reveal a fire, electrical shock, ignition, or operational hazard, the equipment must be removed from service immediately or repaired immediately.

(d) At the completion of examinations and tests required by this section, the person who makes the examinations and tests must certify by signature and date that they have been conducted. A record must be made of any unsafe condition found and any corrective action taken. Certifications and records must be kept for at least one year and must be made available for inspection by authorized representatives of the Secretary and representatives of miners.

§ 75.822 Underground high-voltage longwall cables.

In addition to the high-voltage cable design specifications in § 75.804 of this part, high-voltage cables for use on longwalls may be a type SHD cable with a center ground-check conductor no smaller than a No. 16 AWG stranded conductor. The cables must be MSHA accepted as flame-resistant under part 18 or approved under subpart K of part 7.

§ 75.823 Scope.

Sections 75.823 through 75.834 of this part are electrical safety standards applicable to 2,400 volt continuous mining machines and circuits. A ''qualified person'' as used in these sections means a person meeting the requirements of § 75.153. Other standards in 30 CFR apply to these circuits and equipment where appropriate.

[75 FR 17549, Apr. 6, 2010]

§ 75.824 Electrical protection.

(a) *Trailing cable protection*. The trailing cable extending to the high-voltage continuous mining machine must be

protected by a circuit-interrupting device of adequate interrupting capacity and voltage that provides short-circuit, overload, ground-fault, and under-voltage protection as follows:

(1) *Short-circuit protection.*

(i) The current setting of the device must be the setting specified in the approval documentation or 75 percent of the minimum available phase-to-phase short-circuit current, whichever is less; and

(ii) The time-delay setting must not exceed 0.050 seconds.

(2) *Ground-fault protection.*

(i) Neutral grounding resistors must limit the ground-fault current to no more than 0.5 ampere.

(ii) Ground-fault devices must cause de-energization of the circuit extending to the continuous mining machine at not more than 0.125 ampere. The time-delay of the device must not exceed 0.050 seconds.

(iii) Look-ahead circuits must detect a ground-fault condition and prevent the circuit-interrupting device from closing as long as the ground-fault condition exists.

(iv) Backup ground-fault devices must cause de-energization of the circuit extending to the continuous mining machine at not more than 40 percent of the voltage developed across the neutral grounding resistor when a ground fault occurs with the neutral grounding resistor open. The time-delay setting of the backup device must not exceed 0.25 seconds.

(v) Thermal devices must detect a sustained ground-fault current in the neutral grounding resistor and must de-energize the incoming power. The device must operate at either 50 percent of the maximum temperature rise of the neutral grounding resistor or 302 °F (150 °C), whichever is less. Thermal protection must not be dependent on control power and may consist of a current transformer and over-current relay in the neutral grounding resistor circuit.

(vi) A single window-type current transformer that encircles all three-phase conductors must be used to activate the ground-fault device protecting the continuous mining machine. Equipment grounding conductors must not pass through the current transformer.

(vii) A test circuit for the ground-fault device must be provided. The test circuit must inject no more than 50 percent of the current rating of the neutral grounding resistor through the current transformer. When the test circuit is activated, the circuit-interrupting device must open.

(3) *Under-voltage protection.* The under-voltage device must operate on a loss of voltage, de-energize the circuit, and prevent the equipment from automatically restarting.

(b) *Re-closing.* Circuit-interrupting devices must not re-close automatically.

(c) *Onboard Power Circuits.* When a grounded-phase indicator light circuit is used and it indicates a grounded-phase fault, the following corrective actions must be taken:

(1) The machine must be moved immediately to a location with a properly supported roof; and

(2) The grounded-phase condition must be located and corrected prior to placing the continuous mining machine back into operation.

[75 FR 17549, Apr. 6, 2010]

§ 75.825 Power centers.

(a) *Main disconnecting switch.* The power center supplying high voltage power to the continuous mining machine must be equipped with a main disconnecting switch that, when in the open position, de-energizes input to all power transformers.

(b) *Trailing cable disconnecting device.* In addition to the main disconnecting switch required in paragraph (a) of this section, the power center must be equipped with a disconnecting device for each circuit that supplies power to a high-voltage continuous mining machine. A disconnecting device is defined as a disconnecting switch or a cable coupler.

(c) *Disconnecting switches.* Each disconnecting switch must be labeled to clearly identify the circuit it disconnects, and be designed and installed as follows:

(1) Rated for the maximum phase-to-phase voltage of the circuit;

(2) Rated for the full-load current of the circuit that is supplied power through the device.

(3) Allow for visual observation, without removing any covers, to verify that the contacts are open;

(4) Ground all power conductors on the load side when the switch is in the ''open and grounded'' position;

(5) Can only be locked out in the ''open and grounded'' position; and

(6) Safely interrupts the full-load current of the circuit or causes the current to be interrupted automatically before the disconnecting switch opens.

(d) *Barriers and covers*. All compartments that provide access to high-voltage circuits must have barriers and/or covers to prevent miners from contacting energized high-voltage circuits.

(e) *Main disconnecting switch and control circuit interlocking*. The control circuit must be interlocked with the main disconnecting switch in the power center so that:

(1) When the main disconnecting switch is in the ''open'' position, the control circuit can only be powered through an auxiliary switch in the ''test'' position; and

(2) When the main disconnecting switch is in the ''closed'' position, the control circuit can only be powered through an auxiliary switch in the ''normal'' position.

(f) *Interlocks*. Each cover or removable barrier providing access to high-voltage circuits must be equipped with at least two interlock switches. Except when the auxiliary switch is on the ''test'' position, removal of any cover or barrier that exposes energized high-voltage circuits must cause the interlock switches to automatically de-energize the incoming circuit to the power center.

(g) *Emergency stop switch*. The power center must be equipped with an externally accessible emergency stop switch hard-wired into the incoming ground-wire monitor circuit that de-energizes the incoming high-voltage in the event of an emergency.

(h) *Grounding stick*. The power center must be equipped with a grounding stick to be used prior to performing electrical work to assure that high-voltage capacitors are discharged and circuits are de-energized. The power center must have a label readily identifying the location of the grounding stick. The grounding stick must be stored in a dry location.

(i) *Caution label*. All compartments providing access to energized high-voltage conductors and parts must display a caution label to warn miners against entering the compartments before de-energizing incoming high-voltage circuits.

[75 FR 17549, Apr. 6, 2010]

§ 75.826 High-voltage trailing cables.

High-voltage trailing cables must:

(a) Meet existing trailing cable requirements and the approval requirements of the high-voltage continuous mining machine; and

(b) Meet existing ground-check conductor requirements (§ 75.804) or have a stranded center ground-check conductor not smaller than a No. 16 A.W.G.

[75 FR 17549, Apr. 6, 2010]

§ 75.827 Guarding of trailing cables.

(a) *Guarding*.

(1) The high-voltage cable must be guarded in the following locations:

(i) From the power center cable coupler for a distance of 10 feet inby the power center;

(ii) From the entrance gland for a distance of 10 feet outby the last strain clamp on the continuous mining machine; and,

(iii) At any location where the cable could be damaged by moving equipment.

(2) Guarding must be constructed using nonconductive flame-resistant material or grounded metal.

(b) *Suspended cables and cable crossovers*. When equipment must cross any portion of the cable, the cable must be either:

(1) Suspended from the mine roof; or

(2) Protected by a cable crossover having the following specifications:

(i) A minimum length of 33 inches;

(ii) A minimum width of 17 inches;

(iii) A minimum height of 3 inches;

(iv) A minimum cable placement area of two and one half-inches (2½″) high by four and one-quarter inches (4¼″) wide;

(v) Made of nonconductive material;

(vi) Made of material with a distinctive color. The color black must not be used; and

(vii) Made of material that has a minimum compressive strength of 6,400 pounds per square inch (psi).

[75 FR 17549, Apr. 6, 2010]

§ 75.828 Trailing cable pulling.

The trailing cable must be de-energized prior to being pulled by any equipment other than the continuous mining machine. The cable manufacturer's recommended pulling procedures must be followed when pulling the trailing cable with equipment other than the continuous mining machine.

[75 FR 17549, Apr. 6, 2010]

§ 75.829 Tramming continuous mining machines in and out of the mine and from section to section.

(a) *Conditions of use.* Tramming the continuous mining machine in and out of the mine and from section to section must be done in accordance with movement requirements of high-voltage power centers and portable transformers (§ 75.812) and as follows:

(1) The power source must not be located in areas where permissible equipment is required;

(2) The continuous mining machine must not be used for mining or cutting purposes, unless a power center is used in accordance with §§ 75.823 through 75.828 and §§ 75.830 through 75.833;

(3) Low-, medium-, and high-voltage cables must comply with §§ 75.600–1, 75.907, and 75.826, as applicable; and

(4) The energized high-voltage cable must be mechanically secured onboard the continuous mining machine. This provision applies only when using the power sources specified in paragraphs (c)(2) and (c)(3) of this section.

(b) *Testing prior to tramming.* Prior to tramming the continuous mining machine,

(1) A qualified person must activate the ground-fault and ground-wire monitor test circuits of the power sources specified in paragraph (c) of this section to assure that the corresponding circuit-interrupting device opens the circuit. Corrective actions and recordkeeping resulting from these tests must be in accordance with §§ 75.832(f) and (g).

(2) Where applicable, a person designated by the mine operator must activate the test circuit for the grounded-phase detection circuit on the continuous mining machine to assure that the detection circuit is functioning properly. Corrective actions resulting from this test must be in accordance with § 75.832(f).

(c) *Power sources.* In addition to the power center specified in § 75.825, the following power sources may be used to tram the continuous mining machine.

(1) *Medium-voltage power source.* A medium-voltage power source is a source that supplies 995 volts through a trailing cable (See Figure 1 of this section) to the continuous mining machine. The medium-voltage power source must—

(i) Not be used to back-feed the high-voltage circuits of the continuous mining machine; and

(ii) Meet all applicable requirements for medium-voltage circuits in 30 CFR 75.

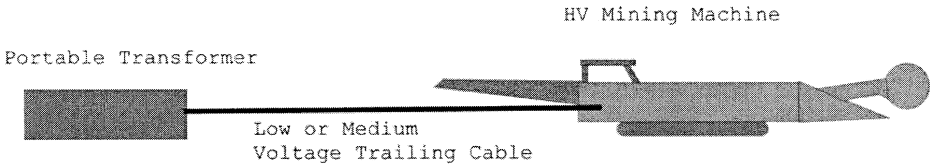

Figure 1-Power Source-75.829(c)(1) 995 volts used for tramming

(2) *Step-up transformer.* A step-up transformer is a transformer that steps up the low or medium voltage to high voltage (See Figure 2 in this section) and must meet the following requirements:

(i) The trailing cable supplying low or medium voltage to the step-up transformer must meet the applicable requirements of 30 CFR part 75;

(ii) The high-voltage circuit output of the step-up transformer supplying power to the continuous mining machine must meet the applicable provisions of § 75.824;

(iii) The step-up transformer enclosure must be—

(A) Securely mounted to minimize vibration on:

(*1*) The continuous mining machine; or

(*2*) A sled/cart that must be connected to the continuous mining machine by a tow-bar and be in close proximity to the mining machine.

(B) Grounded as follows:

(*1*) Connected to the incoming ground conductor of the low- or medium-voltage trailing cable;

(*2*) Bonded by a No. 1/0 A.W.G. or larger external grounding conductor to the continuous mining machine frame; and

(*3*) Bonded by a No. 1/0 A.W.G. or larger external grounding conductor to the metallic shell of each cable coupler.

(C) Equipped with:

(*1*) At least two interlock switches for each of the enclosure covers; and

(*2*) An external emergency stop switch to remove input power to the step-up transformer.

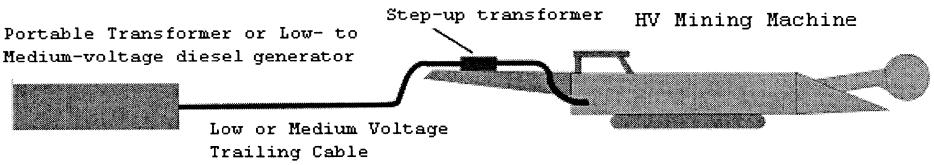

Figure 2 - Power source - 75.829(c)(2) 480 or 995 volts to a step-up transformer to 2300 volts for tramming

[75 FR 17549, Apr. 6, 2010]

§ 75.830 Splicing and repair of trailing cables.

(a) *Splices and repairs.*

(1) Splicing means the mechanical joining of one or more severed conductors in a single length of a cable including the replacement of: Insulation, semi-conductive tape, metallic shielding, and the outer jacket(s).

(2) Repair means to fix damage to any component of the cable other than the conductor.

(3) Splices and repairs to high-voltage trailing cables must be made:

(i) Only by a qualified person trained in the proper methods of splicing and repairing high-voltage trailing cables;

(ii) In a workman-like manner;

(iii) In accordance with § 75.810; and

(iv) Using only MSHA-approved high-voltage kits that include instructions for outer-jacket repairs and splices.

(b) *Splicing limitations.*

(1) Splicing of the high-voltage trailing cable within 35 feet of the continuous mining machine is prohibited.

(2) Only four (4) splices will be allowed at any one time for the portion of the trailing cable that extends from the continuous miner outby for a distance of 300 feet.

[75 FR 17549, Apr. 6, 2010]

§ 75.831 Electrical work; troubleshooting and testing.

(a) *Trailing cable and continuous mining machine electrical work procedures.* Prior to performing electrical work, other than troubleshooting and testing, on the high-voltage trailing cable or the continuous mining machine, a

qualified person must de-energize the power center and follow procedures specified in paragraph (1) or (2):

(1) If a trailing cable disconnecting switch is provided:

(i) Open and ground the power conductors, lock out and tag the disconnecting switch; and

(ii) Lock out and tag the plug to the power receptacle.

(2) If a trailing cable disconnecting switch is not provided and a cable coupler is used as a disconnecting device:

(i) Remove the plug from the power receptacle and connect it to the grounding receptacle;

(ii) Lock out and tag the plug to the grounding receptacle; and

(iii) Place a dust cover over the power receptacle.

(b) *Troubleshooting and testing the trailing cable.* During troubleshooting and testing, the de-energized high-voltage cable may be disconnected from the power center only for that period of time necessary to locate the defective condition. Prior to troubleshooting and testing trailing cables, a qualified person must perform the following:

(1) If a trailing cable disconnecting switch is provided:

(i) Open and ground power conductors and lock out and tag the disconnecting switch;

(ii) Disconnect the plug from the power receptacle;

(iii) Lock out and tag the plug; and

(iv) Place a dust cover over the power receptacle.

(2) If a trailing cable disconnecting switch is not provided and a cable coupler is used as a disconnecting device:

(i) Remove the plug from the power receptacle and connect it to the grounding receptacle to ground the power conductors;

(ii) Remove the plug from the grounding receptacle and install a lock and tag on the plug; and

(iii) Place a dust cover over the power receptacle.

(c) *Troubleshooting and testing limitations.* Troubleshooting and testing energized circuits must be performed only:

(1) On low- and medium-voltage circuits;

(2) When the purpose of troubleshooting and testing is to determine voltages and currents;

(3) By qualified persons; and

(4) When using protective gloves in accordance with the following table:

Circuit voltage	Type of glove required
Greater than 120 volts (nominal) (not intrinsically safe)	Rubber insulating gloves with leather protectors.
40 volts to 120 volts (nominal) (both intrinsically safe and non-intrinsically safe).	Either rubber insulating gloves with leather protectors or dry work gloves.
Greater than 120 volts (nominal) (intrinsically safe)	Either rubber insulating gloves with leather protectors or dry work gloves.

(d) *Power center electrical work procedures.* Before any work is performed inside any compartment of the power center, except for troubleshooting and testing energized circuits as specified in paragraph (c) of this section, a qualified person must:

(1) De-energize affected circuits;

(2) Open the corresponding disconnecting switch, lock it out, and tag it to assure the circuit is isolated;

(3) Visually verify that the contacts of the disconnecting switch are open and grounded; and

(4) Discharge all high-voltage capacitors and circuits.

(e) *Locking out and tagging responsibilities.*

(1) When more than one qualified person is performing electrical work, including troubleshooting and testing, each person must install an individual lock and tag. Each lock and tag must be removed only by the persons who installed them.

(2) If the person who installed the lock and tag is unavailable, the lock and tag may be removed by a person authorized by the operator, provided that:

(i) The authorized person is a qualified person; and

(ii) The mine operator assures that the person who installed the lock and

tag is aware that the lock and tag have been removed.

[75 FR 17549, Apr. 6, 2010]

§ 75.832 Frequency of examinations; recordkeeping.

(a) *Continuous mining machine examination.* At least once every 7 days, a qualified person must examine each high-voltage continuous mining machine to verify that electrical protection, equipment grounding, permissibility, cable insulation, and control devices are properly installed and maintained.

(b) *Ground-fault test circuit.* At least once every 7 days, and prior to tramming the high-voltage continuous mining machine, a qualified person must activate the ground-fault test circuit to verify that it will cause the corresponding circuit-interrupting device to open.

(c) *Ground-wire monitor test.* At least once every 7 days, and prior to tramming the high-voltage continuous mining machine, a qualified person must examine and test each high-voltage continuous mining machine ground-wire monitor circuit to verify that it will cause the corresponding circuit-interrupting device to open.

(d) *Trailing cable inspections.*

(1) Once each day during the shift that the continuous mining machine is first energized, a qualified person must de-energize and inspect the entire length of the high-voltage trailing cable from the power center to the continuous mining machine. The inspection must include examination of the outer jacket repairs and splices for damage, and assure guarding is provided where required.

(2) At the beginning of each shift that the continuous mining machine is energized, a person designated by the mine operator must de-energize and visually inspect the high-voltage trailing cable for damage to the outer jacket. This inspection must be conducted from the continuous mining machine to the following locations:

(i) The last open crosscut;

(ii) Within 150 feet of the working place during retreat or second mining; or

(iii) Up to 150 feet from the continuous mining machine when the machine is used in outby areas.

(e) *Grounded-phase detection test.* When a grounded-phase test circuit is provided on a high-voltage continuous mining machine, a person designated by the mine operator must activate the test circuit at the beginning of each production shift to assure that the detection circuit is functioning properly.

(f) *Corrective action.* When examinations or tests of equipment reveal a risk of fire, electrical shock, ignition, or operational hazard, the equipment must be immediately removed from service or repaired.

(g) *Record of tests.*

(1) At the completion of examinations and tests required under paragraphs (a), (b), and (c) of this section, the person conducting the examinations and tests must:

(i) Certify by signature and date that the examinations and tests have been conducted.

(ii) Make a record of any unsafe condition found.

(2) Any corrective action(s) must be recorded by the person taking the corrective action.

(3) The record must be countersigned by the mine foreman or equivalent mine official by the end of the mine foreman's or the equivalent mine official's next regularly scheduled working shift.

(4) Records must be maintained in a secure book that is not susceptible to alteration or electronically in a computer system so as to be secure and not susceptible to alteration.

(5) Certifications and records must be kept for at least 1 year and must be made available for inspection by authorized representatives of the Secretary and representatives of miners.

[75 FR 17549, Apr. 6, 2010]

§ 75.833 Handling high-voltage trailing cables.

(a) *Cable handling.*

(1) Miners must not handle energized trailing cables unless they are wearing high-voltage insulating gloves, which include the rubber gloves and leather outer protector gloves, or are using insulated cable handling tools that meet

the requirements of paragraph (c) or (d) of this section.

(2) Miners must not handle energized high-voltage cables with any parts of their bodies except by hand in accordance with paragraph (1) above.

(b) *Availability*. Each mine operator must make high-voltage insulating gloves or insulated cable handling tools available to miners handling energized high-voltage trailing cables.

(c) *High-voltage insulating gloves*. High-voltage insulating gloves must meet the following requirements:

(1) The rubber gloves must be designed and maintained to have a voltage rating of at least Class 1 (7,500 volts) and tested every 30 days in accordance with publication ASTM F496–02a, ''Standard Specification for In-Service Care of Insulating Gloves and Sleeves'' (2002). The Director of the Federal Register approved this incorporation by reference in accordance with 5 U.S.C. 522(a) and 1 CFR part 51. ASTM F496–02a may be obtained from the American Society for Testing and Materials, 100 Barr Harbor Drive, West Conshohocken, Pennsylvania 19428–2959, call 610–832–9500 or go to *http://astm.org*. ASTM F496–02a is available for inspection at any MSHA Coal Mine Safety and Health District office, at the MSHA Office of Standards, Regulations, and Variances, 1100 Wilson Boulevard, Room 2350, Arlington, VA 22209–3939, 202–693–9440, or at the National Archives and Records Administration (NARA). For information on the availability of this material at NARA, call 202–741–6030, or go to: *http://www.archives.gov/federal_register/code_of_federal_regulations/ibr_locations.html*.

(2) The rubber glove portion must be air-tested at the beginning of each shift to assure its effectiveness.

(3) Both the leather protector and rubber insulating gloves must be visually examined before each use for signs of damage or defects.

(4) Damaged rubber gloves must be removed from the underground area of the mine or destroyed. Leather protectors must be maintained in good condition or replaced.

(d) *Insulated cable handling tools*. Insulated cable handling tools must be:

(1) Rated and properly maintained to withstand at least 7,500 volts;

(2) Designed and manufactured for cable handling;

(3) Visually examined before each use for signs of damage or defects; and

(4) Removed from the underground area of the mine or destroyed if damaged or defective.

[75 FR 17549, Apr. 6, 2010]

§ 75.834 Training.

In addition to existing part 48 task training, hazard training, training for qualified persons under existing § 75.153, and annual refresher training, the following specialized training shall be provided and specified in the part 48 plan:

(a) Training for miners who perform maintenance on high-voltage continuous mining machines in high-voltage safety, testing, and repair and maintenance procedures.

(b) Training for personnel who work in the vicinity of high-voltage continuous mining machines in safety procedures and precautions for moving the high-voltage machines or the trailing cables.

[75 FR 17549, Apr. 6, 2010]

APPENDIX A TO SUBPART I OF PART 75—DIAGRAMS OF INBY AND OUTBY SWITCHING

Appendix A to Subpart I - Diagrams of Inby and Outby Switching

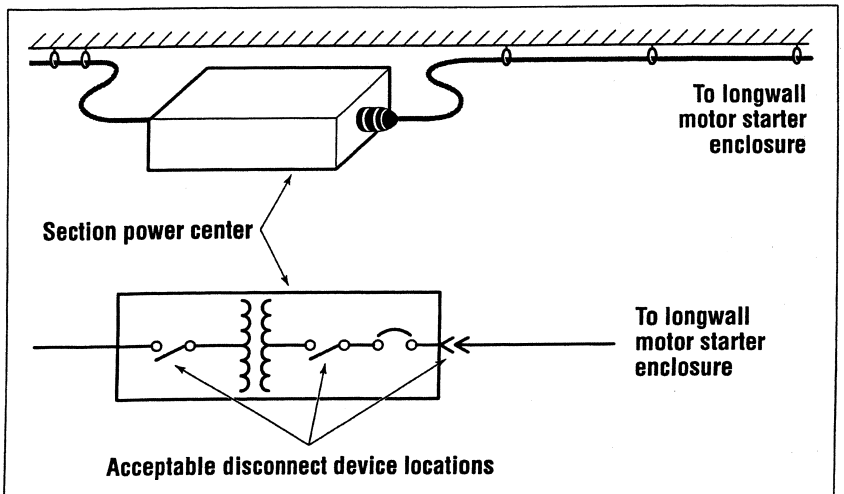

I-1—Inby Switching

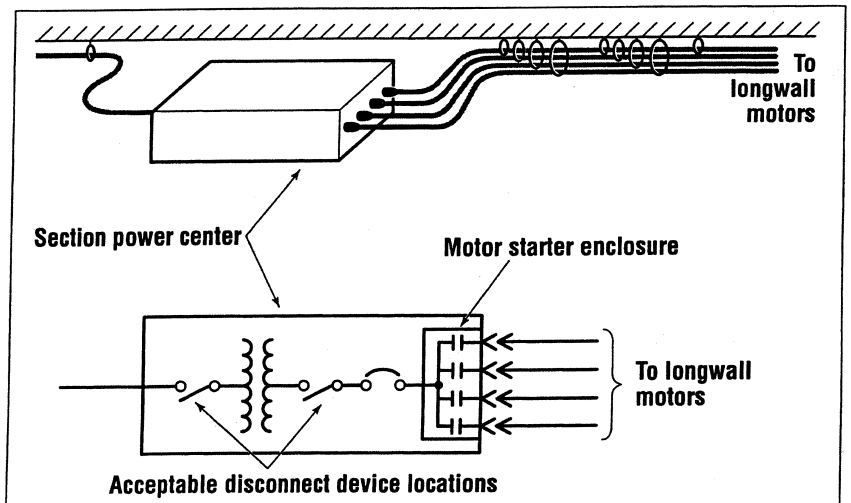

I-2—Outby Switching

[67 FR 11001, Mar. 11, 2002; 67 FR 18823, Apr. 17, 2002]

Subpart J—Underground Low- and Medium-Voltage Alternating Current Circuits

§ 75.900 Low- and medium-voltage circuits serving three-phase alternating current equipment; circuit breakers.

[STATUTORY PROVISIONS]

Low- and medium-voltage power circuits serving three-phase alternating current equipment shall be protected by suitable circuit breakers of adequate interrupting capacity which are properly tested and maintained as prescribed by the Secretary. Such breakers shall be equipped with devices to provide protection against undervoltage, grounded phase, short circuit, and overcurrent.

§ 75.900–1 Circuit breakers; location.

Circuit breakers used to protect low- and medium-voltage circuits underground shall be located in areas which are accessible for inspection, examination, and testing, have safe roofs, and are clear of any moving equipment used in haulageways.

§ 75.900–2 Approved circuit schemes.

The following circuit schemes will be regarded as providing the necessary protection to the circuit required by § 75.900:

(a) Ground check relays may be used for undervoltage protection if the relay coils are designed to trip the circuit breaker when line voltage decreases to 40 to 60 percent of the nominal line voltage.

(b) One undervoltage device installed in the main secondary circuit at the source transformer may be used to provide undervoltage protection for each circuit that receives power from that transformer.

(c) One circuit breaker may be used to protect two or more branch circuits if the circuit breaker is adjusted to afford overcurrent protection for the smallest conductor.

(d) Circuit breakers with shunt trip, series trip or undervoltage release devices may be used if the tripping elements of such devices are selected or adjusted in accordance with the settings listed in the tables of the National Electric Code, 1968.

§ 75.900–3 Testing, examination, and maintenance of circuit breakers; procedures.

Circuit breakers protecting low- and medium-voltage alternating current circuits serving three-phase alternating current equipment and their auxiliary devices shall be tested and examined at least once each month by a person qualified as provided in § 75.153. In performing such tests, actuating any of the circuit breaker auxiliaries or control circuits in any manner which causes the circuit breaker to open, shall be considered a proper test. All components of the circuit breaker and its auxiliary devices shall be visually examined and such repairs or adjustments as are indicated by such tests and examinations shall be carried out immediately.

§ 75.900–4 Testing, examination, and maintenance of circuit breakers; record.

The operator of any coal mine shall maintain a written record of each test, examination, repair, or adjustment of all circuit breakers protecting low- and medium-voltage circuits serving three-phase alternating current equipment used in the mine. Such record shall be kept in a book approved by the Secretary.

[35 FR 17890, Nov. 20, 1970, as amended at 60 FR 33723, June 29, 1995]

§ 75.901 Protection of low- and medium-voltage three-phase circuits used underground.

[STATUTORY PROVISIONS]

(a) Low- and medium-voltage three-phase alternating-current circuits used underground shall contain either a direct or derived neutral which shall be grounded through a suitable resistor at the power center, and a grounding circuit, originating at the grounded side of the grounding resistor, shall extend along with the power conductors and serve as a grounding conductor for the frames of all the electrical equipment supplied power from that circuit, except that the Secretary or his authorized representative may permit

ungrounded low- and medium-voltage circuits to be used underground to feed such stationary electrical equipment if such circuits are either steel armored or installed in grounded rigid steel conduit throughout their entire length. The grounding resistor, where required, shall be of the proper ohmic value to limit the ground fault current to 25 amperes. The grounding resistor shall be rated for maximum fault current continuously and insulated from ground for a voltage equal to the phase-to-phase voltage of the system.

(b) Diesel-powered electrical generators used as an alternative to power centers for the purpose of moving equipment in, out, and around the mine, and to perform work in areas where permissible equipment is not required, must comply with the following:

(1) The diesel engine powering the electrical generator must be approved under 30 CFR part 7, subpart E.

(2) A grounding resistor rated for the phase-to-phase voltage of the system must be provided to limit the ground-fault current to not more than 0.5 amperes. The grounding resistor(s) must be located:

(i) Between the wye-connected generator neutral and the generator frame; (see Figure I in Appendix A to subpart J of this part) or

(ii) Between the wye-connected generator neutral and the generator frame and between the wye-connected transformer secondary and the transformer frame when an isolation transformer(s) is used and the generator is supplying power to the other equipment; (see Figure II in Appendix A to subpart J of this part) or

(iii) Between the wye-connected generator neutral and the generator frame when an auto-transformer is used. (see Figure III in Appendix A to subpart J of this part)

(3) Each three-phase output circuit of the generator must be equipped with a sensitive ground fault relay. The protective relay must be set to cause the circuit interrupting device that supplies power to the primary windings of each transformer to trip and shut down the diesel engine when a phase-to-frame fault of not more than 90 milliamperes occurs.

(4) Each three-phase output circuit that supplies power to equipment must be equipped with an instantaneous sensitive ground-fault relay that will cause its respective circuit interrupting device(s) to trip and cause shutdown of the diesel engine when a phase-to-frame fault occurs. The grounded-phase protection must be set at not more than 90 milliamps. Current transformers used for the ground-fault protection must be single window-type and must be installed to encircle all three phase conductors. Equipment safety grounding conductors must not pass through or be connected in series with ground-fault current transformers.

(5) Each three-phase circuit interrupting device must be provided with a means to provide short-circuit, overcurrent, grounded-phase, undervoltage, and ground wire monitoring protection. The instantaneous only trip unit for the circuit interrupting device(s) in use must be adjusted to trip at not more than 75 percent of the minimum available short circuit current at the point where the portable cable enters the equipment or the maximum allowable instantaneous settings specified in § 75.601–1, whichever is less.

(6) The equipment portable cable length(s) must not exceed the length(s) specified in 30 CFR part 18, appendix I, table 9, Specifications for Cables Longer than 500 Feet.

(7) Permanent label(s) listing the maximum circuit interrupting device setting(s) and maximum portable cable length(s) must be installed on each instantaneous trip unit or be maintained near each three-phase circuit interrupting device. The permanent label(s) must be maintained legibly.

(8) The circuit interrupting device that supplies three-phase power circuit(s) to the equipment being powered must be limited to the use of only one circuit interrupting device at a time when equipment is being moved in, out, and around the mine.

(9) The grounding system must include an MSHA-accepted ground wire monitor system that satisfies the requirements of § 75.902; or have a No. 1/0 or larger external grounding conductor to bond and ground the frames of all

equipment to the frame of the generator.

(10) All trailing cables extending from the generator to equipment must comply with § 75.907.

(11) A strain relief device must be provided on each end of the trailing cables that extends between the generator and the piece of equipment being powered.

(12) Prior to moving each piece of equipment or performing work, a functional test of each ground fault and ground wire monitor system must be performed by a qualified electrician who meets the requirements of § 75.153. The ground-fault circuit must be tested without subjecting the circuit to an actual grounded phase condition. A record of each test must be maintained and made available to authorized representatives of the Secretary and to the miners in such mine.

[35 FR 17890, Nov. 20, 1970, as amended at 70 FR 77736, Dec. 30, 2005]

§ 75.902 Low- and medium-voltage ground check monitor circuits.

[STATUTORY PROVISIONS]

On or before September 30, 1970, low- and medium-voltage resistance grounded systems shall include a fail-safe ground check circuit to monitor continuously the grounding circuit to assure continuity which ground check circuit shall cause the circuit breaker to open when either the ground or pilot check wire is broken, or other no less effective device approved by the Secretary or his authorized representative to assure such continuity, except that an extention of time, not in excess of 12 months, may be permitted by the Secretary on a mine-by-mine basis if he determines that such equipment is not available. Cable couplers shall be constructed so that the ground check continuity conductor shall be broken first and the ground conductors shall be broken last when the coupler is being uncoupled.

§ 75.902–1 Maximum voltage ground check circuits.

The maximum voltage used for such ground check circuits shall not exceed 40 volts.

§ 75.902–2 Approved ground check systems not employing pilot check wires.

Ground check systems not employing pilot check wires will be approved only if it is determined that the system includes a fail safe design causing the circuit breaker to open when ground continuity is broken.

§ 75.902–4 Attachment of ground conductors and ground check wires to equipment frames; use of separate connections.

In grounding equipment frames of all stationary, portable or mobile equipment receiving power from resistance grounded systems separate connections shall be used when practicable.

§ 75.903 Disconnecting devices.

[STATUTORY PROVISIONS]

Disconnecting devices shall be installed in conjunction with the circuit breaker to provide visual evidence that the power is disconnected.

§ 75.904 Identification of circuit breakers.

[STATUTORY PROVISIONS]

Circuit breakers shall be marked for identification.

§ 75.905 Connection of single-phase loads.

[STATUTORY PROVISIONS]

Single-phase loads shall be connected phase-to-phase.

§ 75.906 Trailing cables for mobile equipment, ground wires, and ground check wires.

[STATUTORY PROVISIONS]

Trailing cables for mobile equipment shall contain one or more ground conductors having a cross-sectional area of not less than one-half the power conductor, and, on September 30, 1970, an insulated conductor for the ground continuity check circuit or other no less effective device approved by the Secretary or his authorized representative to assure such continuity, except that an extension of time, not in excess of 12 months may be permitted by the

Secretary on a mine-by-mine basis if he determines that such equipment is not available. Splices made in the cables shall provide continuity of all components.

§ 75.907 Design of trailing cables for medium-voltage circuits.

[STATUTORY PROVISIONS]

Trailing cables for medium-voltage circuits shall include grounding conductors, a ground check conductor, and grounded metallic shields around each power conductor or a ground metallic shield over the assembly, except that on equipment employing cable reels, cables without shields may be used if the insulation is rated 2,000 volts or more.

APPENDIX A TO SUBPART J OF PART 75

Appendix A to Subpart J

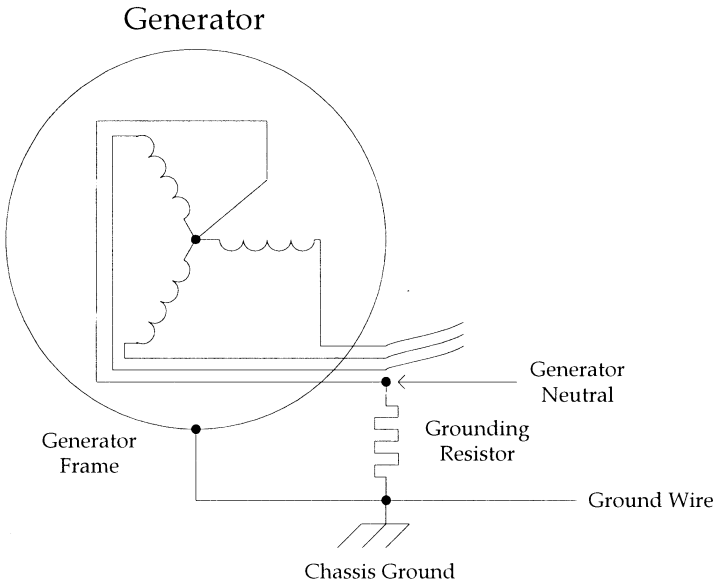

Note that grounding resistor must be mounted on the same frame with the generator.

Figure No. I

Appendix A to Subpart J

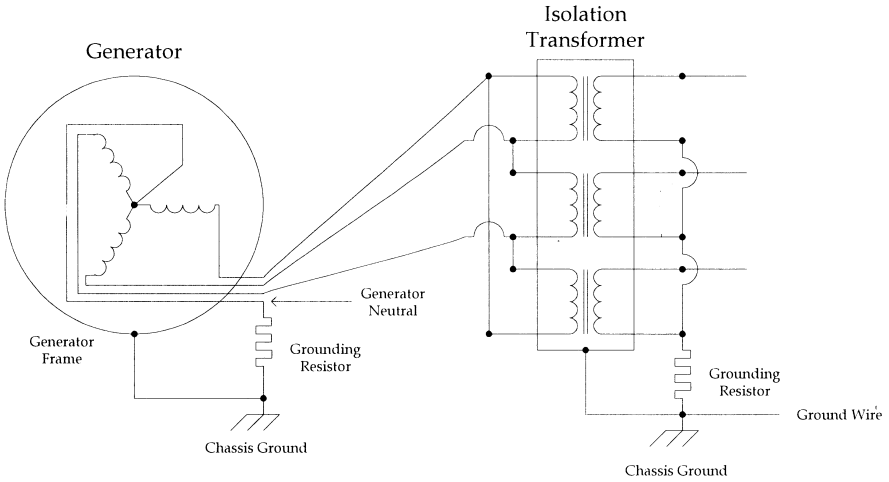

Note that the grounding resistor must be mounted on the same frame with the generator.

Figure No. II

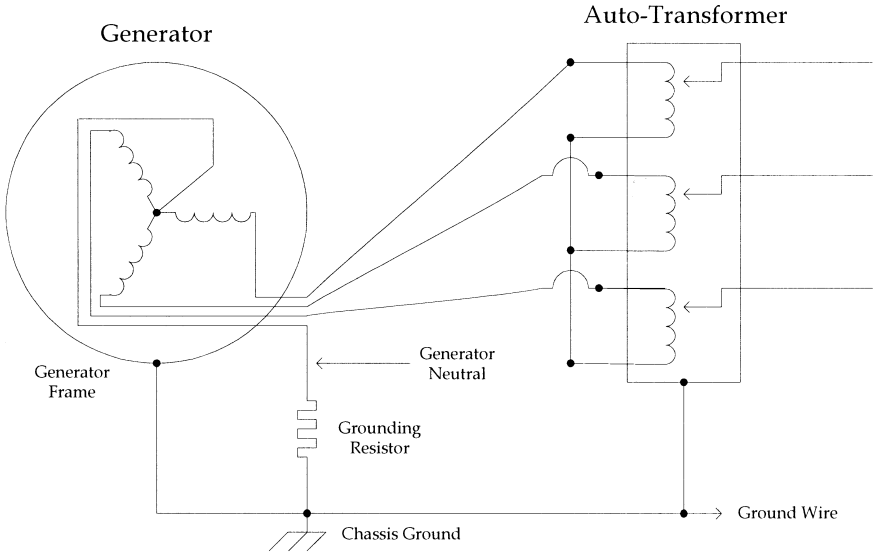

Note that the grounding resistor must be mounted on the same frame with the generator.

Figure No. III

[70 FR 77737, Dec. 30, 2005]

Subpart K—Trolley Wires and Trolley Feeder Wires

§ 75.1000 Cutout switches.

[STATUTORY PROVISIONS]

Trolley wires and trolley feeder wires, shall be provided with cutout switches at intervals of not more than 2,000 feet and near the beginning of all branch lines.

§ 75.1001 Overcurrent protection.

[STATUTORY PROVISIONS]

Trolley wires and trolley feeder wires shall be provided with overcurrent protection.

§ 75.1001–1 Devices for overcurrent protection; testing and calibration requirements; records.

(a) Automatic circuit interrupting devices that will deenergize the affected circuit upon occurrence of a short circuit at any point in the system will meet the requirements of § 75.1001.

(b) Automatic circuit interrupting devices described in paragraph (a) of this section shall be tested and calibrated at intervals not to exceed six months. Testing of such devices shall include passing the necessary amount of electric current through the device to cause activation. Calibration of such devices shall include adjustment of all associated relays to ±15 percent of the indicated value. An authorized representative of the Secretary may require additional testing or calibration of these devices.

(c) A record of the tests and calibrations required by paragraph (b) of this section shall be kept, and shall be made available, upon request, to an authorized representative of the Secretary.

[38 FR 29998, Oct. 31, 1973, as amended at 60 FR 33723, June 29, 1995]

§ 75.1002 Installation of electric equipment and conductors; permissibility.

(a) Electric equipment must be permissible and maintained in a permissible condition when such equipment is located within 150 feet of pillar workings or longwall faces.

(b) Electric conductors and cables installed in or in by the last open crosscut or within 150 feet of pillar workings or longwall faces must be—

(1) Shielded high-voltage cables supplying power to permissible longwall equipment;

(2) Interconnecting conductors and cables of permissible longwall equipment;

(3) Conductors and cables of intrinsically safe circuits; and

(4) Cables and conductors supplying power to low- and medium-voltage permissible equipment.

(5) Shielded high-voltage cables supplying power to permissible continuous mining machines.

[67 FR 11004, Mar. 11, 2002, as amended at 75 FR 17553, Apr. 6, 2010]

§ 75.1003 Insulation of trolley wires, trolley feeder wires and bare signal wires; guarding of trolley wires and trolley feeder wires.

[STATUTORY PROVISIONS]

Trolley wires, trolley feeder wires, and bare signal wires shall be insulated adequately where they pass through doors and stoppings, and where they cross other power wires and cables. Trolley wires and trolley feeder wires shall be guarded adequately:

(a) At all points where men are required to work or pass regularly under the wires;

(b) On both sides of all doors and stoppings; and

(c) At man-trip stations.

The Secretary or his authorized representatives shall specify other conditions where trolley wires and trolley feeder wires shall be adequately protected to prevent contact by any person, or shall require the use of improved methods to prevent such contact. Temporary guards shall be provided where trackmen and other persons work in proximity to trolley wires and trolley feeder wires.

§ 75.1003–1 Other requirements for guarding of trolley wires and trolley feeder wires.

Adequate precaution shall be taken to insure that equipment being moved along haulageways will not come in contact with trolley wires or trolley feeder wires.

§ 75.1003–2 Requirements for movement of off-track mining equipment in areas of active workings where energized trolley wires or trolley feeder wires are present; pre-movement requirements; certified and qualified persons.

(a) Prior to moving or transporting any unit of off-track mining equipment in areas of the active workings where energized trolley wires or trolley feeder wires are present:

(1) The unit of equipment shall be examined by a certified person to ensure that coal dust, float coal dust, loose coal oil, grease, and other combustible materials have been cleaned up and have not been permitted to accumulate on such unit of equipment; and,

(2) A qualified person, as specified in § 75.153 of this part, shall examine the trolley wires, trolley feeder wires, and the associated automatic circuit interrupting devices provided for short circuit protection to ensure that proper short circuit protection exists.

(b) A record shall be kept of the examinations required by paragraph (a) of this section, and shall be made available, upon request, to an authorized representative of the Secretary.

(c) Off-track mining equipment shall be moved or transported in areas of the active workings where energized trolley wires or trolley feeder wires are present only under the direct supervision of a certified person who shall be physically present at all times during moving or transporting operations.

(d) The frames of off-track mining equipment being moved or transported, in accordance with this section, shall be covered on the top and on the trolley wire side with fire-resistant material which has met the applicable requirements of Part 18 of Subchapter D of this chapter (Bureau of Mines Schedule 2G).

(e) Electrical contact shall be maintained between the mine track and the frames of off-track mining equipment

being moved in-track and trolley entries, except that rubber-tired equipment need not be grounded to a transporting vehicle if no metal part of such rubber-tired equipment can come into contact with the transporting vehicle.

(f) A minimum vertical clearance of 12 inches shall be maintained between the farthest projection of the unit of equipment which is being moved and the energized trolley wires or trolley feeder wires at all times during the movement or transportation of such equipment; provided, however, that if the height of the coal seam does not permit 12 inches of vertical clearance to be so maintained, the following additional precautions shall be taken:

(1)(i) Except as provided in paragraph (f)(1)(ii) of this section electric power shall be supplied to the trolley wires or trolley feeder wires only from outby the unit of equipment being moved or transported.

(ii) Where direct current electric power is used and such electric power can be supplied only from inby the equipment being moved or transported, power may be supplied from inby such equipment provided a miner with the means to cut off the power, and in direct communication with persons actually engaged in the moving or transporting operation, is stationed outby the equipment being moved.

(2) The settings of automatic circuit interrupting devices used to provide short circuit protection for the trolley circuit shall be reduced to not more than one-half of the maximum current that could flow if the equipment being moved or transported were to come into contact with the trolley wire or trolley feeder wire;

(3) At all times the unit of equipment is being moved or transported, a miner shall be stationed at the first automatic circuit breaker outby the equipment being moved and such miner shall be: (i) In direct communication with persons actually engaged in the moving or transporting operation, and (ii) capable of communicating with the responsible person on the surface required to be on duty in accordance with § 75.1600–1 of this part;

(4) Where trolley phones are utilized to satisfy the requirements of paragraph (f)(3) of this section, telephones or other equivalent two-way communication devices that can readily be connected with the mine communication system shall be carried by the miner stationed at the first automatic circuit breaker outby the equipment being moved and by a miner actually engaged in the moving or transporting operation; and,

(5) No person shall be permitted to be inby the unit of equipment being moved or transported, in the ventilating current of air that is passing over such equipment, except those persons directly engaged in moving such equipment.

(g) The provisions of paragraphs (a) through (f) of this section shall not apply to units of mining equipment that are transported in mine cars, provided that no part of the equipment extends above or over the sides of the mine car.

[38 FR 29998, Oct. 31, 1973, as amended at 60 FR 33723, June 29, 1995]

Subpart L—Fire Protection

§ 75.1100 Requirements.

[STATUTORY PROVISION]

Each coal mine shall be provided with suitable firefighting equipment adapted for the size and conditions of the mine. The Secretary shall establish minimum requirements of the type, quality, and quantity of such equipment.

§ 75.1100–1 Type and quality of firefighting equipment.

Firefighting equipment required under this subpart shall meet the following minimum requirements:

(a) Waterlines: Waterlines shall be capable of delivering 50 gallons of water a minute at a nozzle pressure of 50 pounds per square inch.

(b) Portable water cars: A portable water car shall be of at least 1,000 gallons capacity (500 gallons capacity for anthracite mines) and shall have at least 300 feet of fire hose with nozzles. A portable water car shall be capable of providing a flow through the hose of 50 gallons of water per minute at a nozzle pressure of 50 pounds per square inch.

(c) A portable chemical car shall carry enough chemicals to provide a

fire extinguishing capacity equivalent to that of a portable water car.

(d) Portable foam-generating machines or devices: A portable foam-generating machine or device shall have facilities and equipment for supplying the machine with 30 gallons of water per minute at 30 pounds per square inch for a period of 35 minutes.

(e) Portable fire extinguisher: A portable fire extinguisher shall be either (1) a multipurpose dry chemical type containing a nominal weight of 5 pounds of dry powder and enough expellant to apply the powder or (2) a foam-producing type containing at least 2½ gallons of foam-producing liquids and enough expellant to supply the foam. Only fire extinguishers approved by the Underwriters Laboratories, Inc., or Factory Mutual Research Corp., carrying appropriate labels as to type and purpose, shall be used. After March 30, 1971, all new portable fire extinguishers acquired for use in a coal mine shall have a 2A 10 BC or higher rating.

(f)(1) Except as provided in paragraph (f)(2) of this section, the fire hose shall be lined with a material having flame resistant qualities meeting requirements for hose in Bureau of Mines' Schedule 2G. The cover shall be polyester, or other material with flame-spread qualities and mildew resistance equal or superior to polyester. The bursting pressure shall be at least 4 times the water pressure at the valve to the hose inlet with the valve closed; the maximum water pressure in the hose nozzle shall not exceed 100 p.s.i.g.

(2) Fire hose installed for use in underground coal mines prior to December 30, 1970, shall be mildew-proof and have a bursting pressure at least 4 times the water pressure at the valve to the hose inlet with the valve closed, and the maximum water pressure in the hose nozzle with water flowing shall not exceed 100 p.s.i.g.

§ 75.1100–2 Quantity and location of firefighting equipment.

(a) *Working sections.* (1) Each working section of coal mines producing 300 tons or more per shift shall be provided with two portable fire extinguishers and 240 pounds of rock dust in bags or other suitable containers; waterlines shall extend to each section loading point and be equipped with enough fire hose to reach each working face unless the section loading point is provided with one of the following:

(i) Two portable water cars; or

(ii) Two portable chemical cars; or

(iii) One portable water car or one portable chemical car, and either (*a*) a portable foam-generating machine or (*b*) a portable high-pressure rock-dusting machine fitted with at least 250 feet of hose and supplied with at least 60 sacks of rock dust.

(2) Each working section of coal mines producing less than 300 tons of coal per shift shall be provided with the following:

(i) Two portable fire extinguishers; and

(ii) 240 pounds of rock dust in bags or other suitable containers; and

(iii) At least 500 gallons of water and at least three pails of 10-quart capacity; or a waterline with sufficient hose to reach the working places; or a portable water car of at least 500-gallons capacity; or a portable, all-purpose, dry-powder chemical car of at least 125-pounds capacity.

(3) As an alternative to paragraph (a)(2) of this section, each working section with no electrical equipment at the face of an anthracite coal mine producing less than 300 tons of coal per shift shall be provided with the following:

(i) Portable fire extinguishers containing a total capacity of at least 30 pounds of dry chemical or 15 gallons of foam and located at the entrance to the gangway at the bottom of the slope; and

(ii) Portable fire extinguishers containing a total capacity of at least 20 pounds of dry chemical or 10 gallons of foam and located within 500 feet from the working face.

(b) *Belt conveyors.* In all coal mines, waterlines shall be installed parallel to the entire length of belt conveyors and shall be equipped with firehose outlets with valves at 300-foot intervals along each belt conveyor and at tailpieces. At least 500 feet of firehose with fittings suitable for connection with each belt conveyor waterline system shall be stored at strategic locations along the belt conveyor. Waterlines may be

installed in entries adjacent to the conveyor entry belt as long as the outlets project into the belt conveyor entry.

(c) *Haulage tracks.* (1) In mines producing 300 tons of coal or more per shift waterlines shall be installed parallel to all haulage tracks using mechanized equipment in the track or adjacent entry and shall extend to the loading point of each working section. Waterlines shall be equipped with outlet valves at intervals of not more than 500 feet, and 500 feet of firehose with fittings suitable for connection with such waterlines shall be provided at strategic locations. Two portable water cars, readily available, may be used in lieu of waterlines prescribed under this paragraph.

(2) In mines producing less than 300 tons of coal per shift, there shall be provided at 500-foot intervals in all main and secondary haulage roads:

(i) A tank of water of at least 55-gallon capacity with at least 3 pails of not less than 10-quart capacity; or

(ii) Not less than 240 pounds of bagged rock dust.

(d) *Transportation.* Each track or off-track locomotive, self-propelled mantrip car, or personnel carrier shall be equipped with one portable fire extinguisher.

(e) *Electrical installations.* At each electrical installation, the operator shall provide two portable fire extinguishers that have a nominal capacity of 5 pounds of dry chemical, or one extinguisher that has a nominal capacity of at least 10 pounds of dry chemical, and which have a 2–A:10–B:C or higher rating.

(f) *Oil storage stations.* Two portable fire extinguishers and 240 pounds of rock dust, shall be provided at each permanent underground oil storage station. One portable fire extinguisher shall be provided at each working section where 25 gallons or more of oil are stored in addition to extinguishers required under paragraph (a) of this section.

(g) *Welding, cutting, soldering.* One portable fire extinguisher or 240 pounds of rock dust shall be provided at locations where welding, cutting, or soldering with arc or flame is being done.

(h) *Powerlines.* At each wooden door through which powerlines pass there shall be one portable fire extinguisher or 240 pounds of rock dust within 25 feet of the door on the intake air side.

(i) *Emergency materials.* (1) At each mine producing 300 tons of coal or more per shift there shall be readily available the following materials at locations not exceeding 2 miles from each working section:

1,000 board feet of brattice boards
2 rolls of brattice cloth
2 hand saws
25 pounds of 8^d nails
25 pounds of 10^d nails
25 pounds of 16^d nails
3 claw hammers
25 bags of wood fiber plaster or 10 bags of cement (or equivalent material for stoppings)
5 tons of rock dust

(2) At each mine producing less than 300 tons of coal per shift the above materials shall be available at the mine, provided, however, that the emergency materials for one or more mines may be stored at a central warehouse or building supply company and such supply must be the equivalent of that required for all mines involved and within 1-hour's delivery time from each mine. This exception shall not apply where the active working sections are more than 2 miles from the surface.

[35 FR 17890, Nov. 20, 1970, as amended at 73 FR 53127, Sept. 15, 2008]

§ 75.1100–3 Condition and examination of firefighting equipment.

All firefighting equipment shall be maintained in a usable and operative condition. Chemical extinguishers shall be examined every 6 months and the date of the examination shall be written on a permanent tag attached to the extinguisher.

[35 FR 17890, Nov. 20, 1970, as amended at 60 FR 33723, June 29, 1995]

§ 75.1101 Deluge-type water sprays, foam generators; main and secondary belt-conveyor drives.

[STATUTORY PROVISIONS]

Deluge-type water sprays or foam generators automatically actuated by

rise in temperature, or other no less effective means approved by the Secretary of controlling fire, shall be installed at main and secondary belt-conveyor drives.

§ 75.1101–1 Deluge-type water spray systems.

(a) Deluge-type spray systems shall consist of open nozzles attached to branch lines. The branch lines shall be connected to a waterline through a control valve operated by a fire sensor. Actuation of the control valve shall cause water to flow into the branch lines and discharge from the nozzles.

(b) Nozzles attached to the branch lines shall be full cone, corrosion resistant and provided with blow-off dust covers. The spray application rate shall not be less than 0.25 gallon per minute per square foot of the top surface of the top belt and the discharge shall be directed at both the upper and bottom surfaces of the top belt and to the upper surface of the bottom belt.

§ 75.1101–2 Installation of deluge-type sprays.

Deluge-type water spray systems shall provide protection for the belt drive and 50 feet of fire-resistant belt or 150 feet of nonfire-resistant belt adjacent to the belt drive.

§ 75.1101–3 Water requirements.

Deluge-type water spray systems shall be attached to a water supply. Water so supplied shall be free of excessive sediment and noncorrosive to the system Water pressure shall be maintained consistent with the pipe, fittings, valves, and nozzles at all times. Water systems shall include strainers with a flush-out connection and a manual shut-off valve. The water supply shall be adequate to provide flow for 10 minutes except that pressure tanks used as a source of water supply shall be of 1,000-gallon capacity for a fire-resistant belt and 3,000 gallons for a nonfire-resistant belt may be provided.

§ 75.1101–4 Branch lines.

As a part of the deluge-type water spray system, two or more branch lines of nozzles shall be installed. The maximum distance between nozzles shall not exceed 8 feet.

§ 75.1101–5 Installation of foam generator systems.

(a) Foam generator systems shall be located so as to discharge foam to the belt drive, belt takeup, electrical controls, gear reducing unit and the conveyor belt.

(b) Foam generator systems shall be equipped with a fire sensor which actuates the system, and each system shall be capable of producing and delivering the following amounts of foam within 5 minutes:

(1) At fire-resistant belt installations, an amount which will fully envelop the belt drive, belt takeup, electrical controls, gear reducing unit, and the conveyor belt over a distance of 50 feet; and,

(2) At nonfire-resistant belt installations, an amount which will fully envelop the belt drive, belt takeup electrical controls, gear reducing unit, and the conveyor belt over a distance of 150 feet.

(c) The foam generator shall be equipped with a warning device designed to stop the belt drive when a fire occurs and all such warning devices shall be capable of giving both an audible and visual signal when actuated by fire.

(d) Water, power, and chemicals required shall be adequate to maintain water or foam flow for no less than 25 minutes.

(e) Water systems shall include strainers with a flush-out connection and a manual shut-off valve.

§ 75.1101–6 Water sprinkler systems; general.

Water sprinkler systems may be installed to protect main and secondary belt-conveyor drives, however, where such systems are employed, they shall be installed and maintained in accordance with §§ 75.1101–7 through 75.1101–11.

§ 75.1101–7 Installation of water sprinkler systems; requirements.

(a) The fire-control components of each water sprinkler system shall be installed, as far as practicable in accordance with the recommendations set forth in National Fire Protection Association 1968–69 edition, Code No. 13, ''Installation of Sprinkler Systems'' and such systems' components shall be

of a type approved by the Underwriters' Laboratories, Inc., Factory Mutual Research Corp.

(b) Each sprinkler system shall provide protection for the motor drive belt takeup, electrical controls, gear reducing unit, and the 50 feet of fire-resistant belt, or 150 feet of nonfire-resistant belt adjacent to the belt drive.

(c) The components of each water sprinkler system shall be located so as to minimize the possibility of damage by roof fall or by the moving belt and its load.

§ 75.1101–8 Water sprinkler systems; arrangement of sprinklers.

(a) At least one sprinkler shall be installed above each belt drive, belt takeup, electrical control, and gear-reducing unit, and individual sprinklers shall be installed at intervals of no more than 8 feet along all conveyor branch lines.

(b) Two or more branch lines, at least one of which shall be above the top belt and one between the top and bottom belt, shall be installed in each sprinkler system to provide a uniform discharge of water to the belt surface.

(c) The water discharge rate from the sprinkler system shall not be less than 0.25 gallon per minute per square foot of the top surface of the top belt and the discharge shall be directed at both the upper and bottom surfaces of the top belt and to the upper surface of the bottom belt. The supply of water shall be adequate to provide a constant flow of water for 10 minutes with all sprinklers functioning.

(d) Each individual sprinkler shall be activated at a temperature of not less than 150 °F. and not more than 300 °F.

(e) Water systems shall include strainers with a flush-out connection and a manual shut-off valve.

§ 75.1101–9 Back-up water system.

One fire hose outlet together with a length of hose capable of extending to the belt drive shall be provided within 300 feet of each belt drive.

§ 75.1101–10 Water sprinkler systems; fire warning devices at belt drives.

Each water sprinkler system shall be equipped with a device designed to stop the belt drive in the event of a rise in temperature and each such warning device shall be capable of giving both an audible and visual warning when a fire occurs.

§ 75.1101–11 Inspection of water sprinkler systems.

Each water sprinkler system shall be examined weekly and a functional test of the complete system shall be conducted at least once each year.

§ 75.1101–12 Equivalent dry-pipe system.

Where water sprinkler systems are installed to protect main and secondary belt conveyor drives and freezing temperatures prevail, an equivalent dry-pipe system may be installed.

§ 75.1101–13 Dry powder chemical systems; general.

Self-contained dry powder chemical systems may be installed to protect main and secondary belt conveyor drives, however, where such systems are employed, they shall be installed and maintained in accordance with the provisions of §§ 75.1101–14 through 75.1101–22.

§ 75.1101–14 Installation of dry powder chemical systems.

(a) Self-contained dry powder chemical systems shall be installed to protect each belt-drive, belt takeup, electrical-controls, gear reducing units and 50 feet of fire-resistant belt or 150 feet of non-fire-resistant belt adjacent to the belt drive.

(b) The fire-control components of each dry powder chemical system shall be a type approved by the Underwriters' Laboratories, Inc., or Factory Mutual Engineering Corp.

(c) The components of each dry powder chemical system shall be located so as to minimize the possibility of damage by roof fall or by the moving belt and its load.

§ 75.1101–15 Construction of dry powder chemical systems.

(a) Each self-contained dry powder system shall be equipped with hose or pipe lines which are no longer than necessary.

(b) Metal piping and/or hose between control valves and nozzles shall have a

minimum bursting pressure of 500 p.s.i.g.

(c) Hose shall be protected by wire braid or its equivalent.

(d) Nozzles and reservoirs shall be sufficient in number to provide maximum protection to each belt, belt takeup, electrical controls, and gear reducing unit.

(e) Each belt shall be protected on the top surface of both the top and bottom belts and the bottom surface of the top belt.

§ 75.1101–16 Dry powder chemical systems; sensing and fire-suppression devices.

(a) Each self-contained dry powder chemical system shall be equipped with sensing devices which shall be designed to activate the fire-control system, sound an alarm and stop the conveyor drive motor in the event of a rise in temperature, and provision shall be made to minimize contamination of the lens of any optical sensing device installed in such system.

(b) Where sensors are operated from the same power source as the belt drive, each sensor shall be equipped with a standby power source which shall be capable of remaining operative for at least 4 hours after a power cutoff.

(c) Sensor systems shall include a warning indicator (or test circuit) which shows it is operative.

(d) Each fire-suppression system shall be equipped with a manually operated control valve which shall be independent of the sensor.

§ 75.1101–17 Sealing of dry powder chemical systems.

Each dry powder chemical system shall be adequately sealed to protect all components of the system from moisture dust, and dirt.

§ 75.1101–18 Dry powder requirements.

Each dry powder chemical system shall contain the following minimum amounts of multipurpose dry powder:

Belt	Dry powder, pounds
Fire resistant	125
Non-fire resistant	250

§ 75.1101–19 Nozzles; flow rate and direction.

The nozzles of each dry powder chemical system shall be capable of discharging all powder within 1 minute after actuation of the system and such nozzles shall be directed so as to minimize the effect of ventilation upon fire control.

§ 75.1101–20 Safeguards for dry powder chemical systems.

Adequate guards shall be provided along all belt conveyors in the vicinity of each dry powder chemical system to protect persons whose vision is restricted by a discharge of powder from the system. In addition, hand-rails shall be installed in such areas to provide assistance to those passing along the conveyor after a powder discharge.

§ 75.1101–21 Back-up water system.

One fire hose outlet together with a length of hose capable of extending to the belt drive shall be provided within 300 feet of each belt drive.

§ 75.1101–22 Inspection of dry powder chemical systems.

(a) Each dry powder chemical system shall be examined weekly and a functional test of the complete system shall be conducted at least once each year.

(b) Where the dry powder chemical system has been actuated, all components of the system shall be cleaned immediately by flushing all powder from pipes and hoses and all hose damaged by fire shall be replaced.

§ 75.1102 Slippage and sequence switches.

[STATUTORY PROVISIONS]

Underground belt conveyors shall be equipped with slippage and sequence switches.

§ 75.1103 Automatic fire warning devices.

[STATUTORY PROVISIONS]

On or before May 29, 1970, devices shall be installed on all such belts which will give a warning automatically when a fire occurs on or near

such belt. The Secretary shall prescribe a schedule for installing fire suppression devices on belt haulageways.

§ 75.1103–1 Automatic fire sensors.

A fire sensor system shall be installed on each underground belt conveyor. Sensors so installed shall be of a type which will (a) give warning automatically when a fire occurs on or near such belt; (b) provide both audible and visual signals that permit rapid location of the fire.

§ 75.1103–2 Automatic fire sensors; approved components; installation requirements.

(a) The components of each automatic fire sensor required to be installed in accordance with the provisions of § 75.1103–1 shall be of a type and installed in a manner approved by the Secretary, or the components shall be of a type listed, approved and installed in accordance with the recommendations of a nationally recognized testing laboratory approved by the Secretary.

(b) Where applicable, and not inconsistent with these regulations, automatic fire sensors shall be installed in accordance with the recommendations set forth in National Fire Code No. 72A ''Local Protective Signaling Systems'' (NFPA No. 72A–1967). National Fire Code No. 72A (1967) is hereby incorporated by reference and made a part hereof. National Fire Code No. 72A is available for examination at each MSHA Coal Mine Safety and Health district office, and may be obtained from the National Fire Protection Association, 11 Tracy Drive, Avon, MA 02322; Telephone: 800–344–3555 (toll free); *http://www.nfpa.org*.

[37 FR 16546, Aug. 16, 1972, as amended at 71 FR 16668, Apr. 3, 2006]

§ 75.1103–3 Automatic fire sensor and warning device systems; minimum requirements; general.

Automatic fire sensor and warning device systems installed in belt haulageways of underground coal mines shall be assembled from components which meet the minimum requirements set forth in §§ 75.1103–4 through 75.1103–7 unless otherwise approved by the Secretary.

[37 FR 16545, Aug. 16, 1972]

§ 75.1103–4 Automatic fire sensor and warning device systems; installation; minimum requirements.

(a) Effective December 31, 2009, automatic fire sensor and warning device systems that use carbon monoxide sensors shall provide identification of fire along all belt conveyors.

(1) Carbon monoxide sensors shall be installed at the following locations:

(i) Not more than 100 feet downwind of each belt drive unit, each tailpiece transfer point, and each belt take-up. If the belt drive, tailpiece, and/or take-up for a single transfer point are installed together in the same air course, and the distance between the units is less than 100 feet, they may be monitored with one sensor downwind of the last component. If the distance between the units exceeds 100 feet, additional sensors are required downwind of each belt drive unit, each tailpiece transfer point, and each belt take-up;

(ii) Not more than 100 feet downwind of each section loading point;

(iii) Along the belt entry so that the spacing between sensors does not exceed 1,000 feet. Where air velocities are less than 50 feet per minute, spacing must not exceed 350 feet; and

(iv) The mine operator shall indicate the locations of all carbon monoxide sensors on the mine maps required by §§ 75.1200 and 75.1505 of this part.

(2) Where used, sensors responding to radiation, smoke, gases, or other indications of fire, shall be spaced at regular intervals to provide protection equivalent to carbon monoxide sensors, and installed within the time specified in paragraph (a)(3) of this section.

(3) When the distance from the tailpiece at loading points to the first outby sensor reaches the spacing requirements in § 75.1103–4(a)(1)(iii), an additional sensor shall be installed and put in operation within 24 production shift hours. When sensors of the kind described in paragraph (a)(2) of this section are used, they shall be installed and put in operation within 24 production shift hours after the equivalent distance which has been established for the sensor from the tailpiece at loading points to the first outby sensor is first reached.

(b) Automatic fire sensor and warning device systems shall be installed so

as to minimize the possibility of damage from roof falls and the moving belt and its load. Sensors must be installed near the center in the upper third of the entry, in a manner that does not expose personnel working on the system to unsafe conditions. Sensors must not be located in abnormally high areas or in other locations where air flow patterns do not permit products of combustion to be carried to the sensors.

(c) Infrared, ultraviolet, and other sensors whose effectiveness is impaired by contamination shall be protected from dust, dirt, and moisture.

(d) The voltage of automatic fire sensor and warning device systems shall not exceed 120 volts.

(e) Except when power must be cut off in the mine under the provisions of § 75.313, automatic fire sensor and warning device systems shall be capable of giving warning of fire for a minimum of 4 hours after the source of power to the belt is removed unless the belt haulageway is examined for hot rollers and fire as provided in paragraph (e) (1) or (2) of this section.

(1) When an unplanned removal of power from the belt occurs an examination for hot rollers and fire in the operating belts of a conveyor system shall be completed within 2 hours after the belt has stopped.

(2) When a preplanned removal of power from the belt occurs an examination for hot rollers and fire on the operating belts of a conveyor system may commence not more than 30 minutes before the belts are stopped and shall be completed within 2 hours after the examination is commenced, or the examination shall be commenced when the belts are stopped and completed within 2 hours after the belts are stopped.

[37 FR 16545, Aug. 16, 1972, as amended at 57 FR 20928, May 15, 1992; 73 FR 80614, Dec. 31, 2008]

§ 75.1103–5 Automatic fire warning devices; actions and response.

(a) When the carbon monoxide level reaches 10 parts per million above the established ambient level at any sensor location, automatic fire sensor and warning device systems shall provide an effective warning signal at the following locations:

(1) At working sections and other work locations where miners may be endangered from a fire in the belt entry.

(2) At a manned surface location where personnel have an assigned post of duty. The manned surface location must have:

(i) A telephone or equivalent communication with all miners who may be endangered and

(ii) A map or schematic that shows the locations of sensors, and the intended air flow direction at these locations. This map or schematic must be updated within 24 hours of any change in this information.

(3) The automatic fire sensor and warning device system shall be monitored for a period of 4 hours after the belt is stopped, unless an examination for hot rollers and fire is made as prescribed in § 75.1103–4(e).

(b) The fire sensor and warning device system shall include a means for rapid evaluation of electrical short and open circuits, ground faults, pneumatic leaks, or other defect detrimental to its proper operational condition.

(c) Automatic fire sensor and warning devices shall include a manual reset feature.

(d) When a malfunction or warning signal is received at the manned surface location, the sensors that are activated must be identified and appropriate personnel immediately notified.

(e) Upon notification of a malfunction or warning signal, appropriate personnel must immediately initiate an investigation to determine the cause of the malfunction or warning signal and take the required actions set forth in paragraph (f) of this section.

(f) If any sensor indicates a warning, the following actions must be taken unless the mine operator determines that the signal does not present a hazard to miners:

(1) Appropriate personnel must notify miners in affected working sections, in affected areas where mechanized mining equipment is being installed or removed, and at other locations specified in the approved mine emergency evacuation and firefighting program of instruction; and

(2) All miners in the affected areas, unless assigned emergency response duties, must be immediately withdrawn to a safe location identified in the mine emergency evacuation and firefighting program of instruction.

(g) If the warning signal will be activated during calibration of sensors, personnel manning the surface location must be notified prior to and upon completion of calibration. Affected working sections, areas where mechanized mining equipment is being installed or removed, or other areas designated in the approved emergency evacuation and firefighting program of instruction must be notified at the beginning and completion of calibration.

(h) If any fire detection component becomes inoperative, immediate action must be taken to repair the component. While repairs are being made, operation of the belt may continue if the following requirements are met:

(1) If one sensor becomes inoperative, a trained person must continuously monitor for carbon monoxide at the inoperative sensor;

(2) If two or more adjacent sensors become inoperative, trained persons must patrol and continuously monitor the affected areas for carbon monoxide so that they will be traveled each hour in their entirety. Alternatively, a trained person must be stationed at each inoperative sensor to monitor for carbon monoxide;

(3) If the complete fire detection system becomes inoperative, trained persons must patrol and continuously monitor the affected areas for carbon monoxide so that they will be traveled each hour in their entirety;

(4) Trained persons who conduct monitoring under this section must have two-way voice communication capability, at intervals not to exceed 2,000 feet, and must report carbon monoxide concentrations to the surface at intervals not to exceed one hour;

(5) Trained persons who conduct monitoring under this section must immediately report to the surface any concentration of carbon monoxide that reaches 10 parts per million above the established ambient level, unless the mine operator knows that the source of the carbon monoxide does not present a hazard to miners; and

(6) Handheld detectors used to monitor the belt entry under this section must have a detection level equivalent to that of the system's carbon monoxide sensors.

[37 FR 16545, Aug. 16, 1972, as amended at 73 FR 80615, Dec. 31, 2008]

§ 75.1103–6 Automatic fire sensors; actuation of fire suppression systems.

Point-type heat sensors or automatic fire sensor and warning device systems may be used to actuate deluge-type water systems, foam generator systems, multipurpose dry-powder systems, or other equivalent automatic fire suppression systems.

[73 FR 80615, Dec. 31, 2008]

§ 75.1103–7 Electrical components; permissibility requirements.

The electrical components of each automatic fire sensor and warning device system shall:

(a) Remain functional when the power circuits are deenergized as required by § 75.706; and

(b) Be provided with protection against ignition of methane or coal dust when the electrical power is deenergized as required by § 75.313, but these components shall be permissible or intrinsically safe if installed in a return airway.

[37 FR 16546, Aug. 16, 1972, as amended at 57 FR 20929, May 15, 1992]

§ 75.1103–8 Automatic fire sensor and warning device systems; examination and test requirements.

(a) Automatic fire sensor and warning device systems shall be examined at least once each shift when belts are operated as part of a production shift. A functional test of the warning signals shall be made at least once every seven days. Examination and maintenance of such systems shall be by a qualified person.

(b) A record of the functional test conducted in accordance with paragraph (a) of this section shall be maintained by the operator and kept for a period of one year.

(c) Sensors shall be calibrated in accordance with the manufacturer's calibration instructions at intervals not to exceed 31 days. A record of the sensor

calibrations shall be maintained by the operator and kept for a period of one year.

[73 FR 80615, Dec. 31, 2008]

§ 75.1103–9 Minimum requirements; fire suppression materials and location; maintenance of entries and crosscuts; access doors; communications; fire crews; high-expansion foam devices.

(a) The following materials shall be stored within 300 feet of each belt drive or at a location where the material can be moved to the belt drive within 5 minutes, except that when the ventilating current in the belt haulageway travels in the direction of the normal movement of coal on the belt, the materials shall be stored within 300 feet of the belt tailpiece or at a location where the materials can be moved to the belt tailpiece within 5 minutes.

(1) 500 feet of fire hose, except that if the belt flight is less than 500 feet in length the fire hose may be equal to the length of the belt flight. A high expansion foam device may be substituted for 300 feet of the 500 feet of the fire hose. Where used, such foam generators shall produce foam sufficient to fill 100 feet of the belt haulageway in not more than 5 minutes. Sufficient power cable and water hose shall be provided so that the foam generator can be installed at any crosscut along the belt by which the generator is located. A 1-hour supply of foam producing chemicals and tools and hardware required for its operation shall be stored at the foam generator.

(2) Tools to open a stopping between the belt entry and the adjacent intake entry; and

(3) 240 pounds of bagged rock dust.

(b) The entry containing the main waterline and the crosscuts containing water outlets between such entry and the belt haulageway (if the main waterline is in an adjacent entry) shall be maintained accessible and in safe condition for travel and firefighting activities. Each stopping in such crosscuts or adjacent crosscuts shall have an access door.

(c) Suitable communication lines extending to the surface shall be provided in the belt haulageway or adjacent entry.

(d) The fire suppression system required at the belt drive shall include the belt discharge head.

(e) A crew consisting of at least five members for each working shift shall be trained in firefighting operations. Fire drills shall be held at intervals not exceeding 6 months.

[37 FR 16546, Aug. 16, 1972]

§ 75.1103–10 Fire suppression systems; additional requirements.

For each conveyor belt flight exceeding 2,000 feet in length, where the average air velocity along the belt haulage entry exceeds 100 feet per minute, an additional cache of the materials specified in § 75.1103–9(a)(1), (2), and (3) shall be provided. The additional cache may be stored at the locations specified in § 75.1103–9(a), or at some other strategic location readily accessible to the conveyor belt flight.

[73 FR 80616, Dec. 31, 2008]

§ 75.1103–11 Tests of fire hydrants and fire hose; record of tests.

Each fire hydrant shall be tested by opening to insure that it is in operating condition, and each fire hose shall be tested, at intervals not exceeding 1 year. A record of these tests shall be maintained at an appropriate location.

[37 FR 16546, Aug. 16, 1972]

§ 75.1104 Underground storage, lubricating oil and grease.

[STATUTORY PROVISIONS]

Underground storage places for lubricating oil and grease shall be of fireproof construction. Except for specially prepared materials approved by the Secretary, lubricating oil and grease kept in all underground areas in a coal mine shall be in fireproof, closed metal containers or other no less effective containers approved by the Secretary.

§ 75.1106 Welding, cutting, or soldering with arc or flame underground.

[STATUTORY PROVISIONS]

All welding, cutting, or soldering with arc or flame in all underground areas of a coal mine shall, whenever practicable, be conducted in fireproof

enclosures. Welding, cutting, or soldering with arc or flame in other than a fireproof enclosure shall be done under the supervision of a qualified person who shall make a diligent search for fire during and after such operations and shall, immediately before and during such operations, continuously test for methane with means approved by the Secretary for detecting methane. Welding, cutting, or soldering shall not be conducted in air that contains 1.0 volume per centum or more of methane. Rock dust or suitable fire extinguishers shall be immediately available during such welding, cutting or soldering.

§ 75.1106–1 Test for methane.

Until December 31, 1970, a permissible flame safety lamp may be used to make tests for methane required by the regulations in this part. On and after December 31, 1970 a methane detector approved by the Secretary shall be used for such tests and a permissible flame safety lamp may be used as a supplemental testing device. A person qualified to test for methane under § 75.151 will be a qualified person for the purpose of this section.

TRANSPORTATION, HANDLING AND STORAGE OF LIQUEFIED AND NONLIQUEFIED COMPRESSED GAS CYLINDERS

§ 75.1106–2 Transportation of liquefied and nonliquefied compressed gas cylinders; requirements.

(a) Liquefied and nonliquefied compressed gas cylinders transported into or through an underground coal mine shall be:

(1) Placed securely in devices designed to hold the cylinder in place during transit on self-propelled equipment or belt conveyors;

(2) Disconnected from all hoses and gages;

(3) Equipped with a metal cap or ''headband'' (fence-type metal protector around the valve stem) to protect the cylinder valve during transit; and,

(4) Clearly labeled ''empty'' or ''MT'' when the gas in the cylinder has been expended.

(b) In addition to the requirements of paragraph (a) of this section, when liquefied and nonliquefied compressed gas cylinders are transported by a trolley wire haulage system into or through an underground coal mine, such cylinders shall be placed in well insulated and substantially constructed containers which are specifically designed for holding such cylinders.

(c) Liquefied and nonliquefied compressed gas cylinders shall not be transported on mantrips.

[36 FR 22061, Nov. 19, 1971]

§ 75.1106–3 Storage of liquefied and nonliquefied compressed gas cylinders; requirements.

(a) Liquefied and nonliquefied compressed gas cylinders stored in an underground coal mine shall be:

(1) Clearly marked and identified as to their contents in accordance with Department of Transportation regulations.

(2) Placed securely in storage areas designated by the operator for such purpose, and where the height of the coalbed permits, in an upright position, preferably in specially designated racks, or otherwise secured against being accidently tipped over.

(3) Protected against damage from falling material, contact with power lines and energized electrical equipment, heat from welding, cutting or soldering, and exposure to flammable liquids.

(b) Liquefied and nonliquefied compressed gas cylinders shall not be stored or left unattended in any area inby the last open crosscut of an underground coal mine.

(c) When not in use, the valves of all liquefied and nonliquefied compressed gas cylinders shall be in the closed position, and all hoses shall be removed from the cylinder.

[36 FR 22061, Nov. 19, 1971]

§ 75.1106–4 Use of liquefied and nonliquefied compressed gas cylinders; general requirements.

(a) Persons assigned by the operator to use and work with liquefied and nonliquefied compressed gas shall be trained and designated by the operator as qualified to perform the work to which they are assigned, and such qualified persons shall be specifically instructed with respect to the dangers

inherent in the use of such gases in an underground coal mine.

(b) Persons who perform welding, cutting, or burning operations shall wear clothing free from excessive oil or grease.

(c) Liquefied and nonliquefied compressed gas shall be used only in well-ventilated areas.

(d) Not more than one liquefied or nonliquefied compressed gas unit, consisting of one oxygen cylinder and one additional gas cylinder, shall be used to repair any unit of equipment which is inby the loading point of any section.

(e) Where liquefied and nonliquefied compressed gas is used regularly in underground shops or other underground structures, such shops or structures shall be on a separate split of air.

(f) Where liquefied and nonliquefied compressed gas is used in any area in which oil, grease, or coal dust is present, oil and grease deposits shall, where practicable, be removed and the entire area within 10 feet of the worksite covered with a heavy coating of rock dust.

(g) Liquefied and nonliquefied compressed gas cylinders shall be located no less than 10 feet from the worksite, and where the height of the coal seam permits, they shall be placed in an upright position and chained or otherwise secured against falling.

(h) Liquefied and nonliquefied compressed gas shall not be used under direct pressure from the cylinder and, where such gases are used under reduced pressure, the pressure level shall not exceed that recommended by the manufacturer.

(i) ''Manifolding cylinders'' shall only be performed in well-ventilated shops where the necessary equipment is properly installed and operated in accordance with specifications for safety prescribed by the manufacturer.

[36 FR 22061, Nov. 19, 1971]

§ 75.1106–5 Maintenance and tests of liquefied and nonliquefied compressed gas cylinders; accessories and equipment; requirements.

(a) Hose lines, gages, and other cylinder accessories shall be maintained in a safe operating condition.

(b) Defective cylinders, cylinder accessories, torches, and other welding, cutting, and burning equipment shall be labeled ''defective'' and taken out of service.

(c) Each qualified person assigned to perform welding, cutting, or burning with liquefied and nonliquefied compressed gas shall be equipped with a wrench specifically designed for use with liquefied and nonliquefied compressed gas cylinders and a suitable torchtip cleaner to maintain torches in a safe operating condition.

(d) Tests for leaks on the hose valves or gages of liquefied and nonliquefied compressed gas cylinders shall only be made with a soft brush and soapy water or soap suds, or other device approved by the Secretary.

[36 FR 22062, Nov. 19, 1971]

§ 75.1106–6 Exemption of small low pressure gas cylinders containing nonflammable or nonexplosive gas mixtures.

Small low pressure gas cylinders containing nonflammable or nonexplosive gas mixtures, which provide for the emission of such gas under a pressure reduced from a pressure which does not exceed 250 p.s.i.g., and which is manufactured and sold in conformance with U.S. Department of Transportation Special Permit No. 6029 as a calibration test kit for methane monitoring systems, shall be exempt from the requirements of §§ 75.1106–2(c) and 75.1106–4(d), (f) and (g).

[36 FR 22062, Nov. 19, 1971]

Fire Suppression Devices and Fire-Resistant Hydraulic Fluids on Underground Equipment

§ 75.1107 Fire suppression devices.

[Statutory Provisions]

On and after March 30, 1971, fire-suppression devices meeting specifications prescribed by the Secretary shall be installed on unattended underground equipment and suitable fire-resistant hydraulic fluids approved by the Secretary shall be used in the hydraulic systems of such equipment. Such fluids shall be used in the hydraulic systems of other underground equipment unless

fire suppression devices meeting specifications prescribed by the Secretary are installed on such equipment.

§ 75.1107–1 Fire-resistant hydraulic fluids and fire suppression devices on underground equipment.

(a)(1) Unattended electrically powered equipment used underground which uses hydraulic fluid shall use approved fire-resistant hydraulic fluid.

(2) Except as provided in paragraph (a) (3) of this section, within 24 production shift hours after being installed, unattended electrically powered equipment used underground shall be equipped with a fire suppression device which meets the applicable requirements of §§ 75.1107–3 through 75.1107–16.

(3) Unattended enclosed motors, controls, transformers, rectifiers, and other similar noncombustible electrically powered equipment containing no flammable fluid may be protected:

(i) By an approved fire suppression device, or

(ii) Be located at least 2 feet from coal or other combustible materials, or

(iii) Be separated from the coal or combustible materials by a 4-inch-thick masonry firewall or equivalent; and be mounted on a minimum 4-inch-thick noncombustible surface, platform, or equivalent. The electrical cables at such equipment shall conform with the requirements of Part 18 of this chapter (Bureau of Mines Schedule 2G) or be in metal conduit.

(b) Attended electrically powered equipment used underground which uses hydraulic fluid shall use approved fire-resistant hydraulic fluid unless such equipment is protected by a fire suppression device which meets the applicable requirements of §§ 75.1107–3—75.1107–16.

(c) For purpose of §§ 75.1107—75.1107–16 the following underground equipment shall be considered attended equipment:

(1) Any machine or device regularly operated by a miner assigned to operate such machine or device;

(2) Any machine or device which is mounted in the direct line of sight of a jobsite which is located within 500 feet of such machine or device and which jobsite is regularly occupied by a miner assigned to perform job duties at such jobsite during each production shift.

(d) Machines and devices described under paragraph (c) of this section must be inspected for fire and the input powerline deenergized when workmen leave the area for more than 30 minutes.

[37 FR 15301, July 29, 1972]

§ 75.1107–2 Approved fire-resistant hydraulic fluids; minimum requirements.

Fire-resistant hydraulic fluids and concentrates required to be employed in the hydraulic system of underground equipment in accordance with the provisions of § 75.1107–1 shall be considered suitable only if they have been produced under an approval, or any modification thereof, issued pursuant to Part 35 Subchapter I of this chapter (Bureau of Mines Schedule 30), or any revision thereof.

[37 FR 15301, July 29, 1972]

§ 75.1107–3 Fire suppression devices; approved components; installation requirements.

(a) The components of each fire suppression device required to be installed in accordance with the provisions of § 75.1107–1 shall be approved by the Secretary, or where appropriate be listed as approved by a nationally recognized agency approved by the Secretary.

(b) Where used, pressure vessels shall conform with the requirements of sections 3603, 3606, 3607, 3707, and 3708 of National Fire Code No. 22 ''Water Tanks for Private Fire Protection'' (NFPA No. 22–1971).

(c) The cover of hose of fire suppression devices, if used on the protected equipment and installed after the effective date of this section, shall meet the flame-resistant requirements of Part 18 of this chapter (Bureau of Mines Schedule 2G).

(d) Fire suppression devices required to be installed in accordance with the provisions of § 75.1107–1 shall where appropriate be installed in accordance with the manufacturer's specifications.

[37 FR 15301, July 29, 1972]

§ 75.1107–4 Automatic fire sensors and manual actuators; installation; minimum requirements.

(a)(1) Where fire suppression devices are installed on unattended underground equipment, one or more point-type sensors or equivalent shall be installed for each 50 square feet of top surface area, or fraction thereof, of such equipment, and each sensor shall be designed to activate the first suppression system and disconnect the electrical power source to the equipment protected, and, except where sprinklers are used, there shall be in addition, a manual actuator installed to operate the system. Where sprinklers are used, provision shall be made for manual application of water to the protected equipment in lieu of a manual actuator.

(2) Two or more manual actuators, where practicable, shall be installed, as provided in paragraphs (a)(2) (i) and (ii) of this section, to activate fire suppression devices on attended equipment purchased on or after the effective date of this § 75.1107–4. At least one manual actuator shall be used on equipment purchased prior to the effective date of this § 75.1107–4.

(i) Manual actuators installed on attended equipment regularly operated by a miner, as provided in § 75.1107–1(c)(1) shall be located at different locations on the equipment, and at least one manual actuator shall be located within easy reach of the operator's normal operating position.

(ii) Manual actuators to activate fire suppression devices on attended equipment not regularly operated by a miner, as provided in § 75.1107–1(c)(2), shall be installed at different location, and at least one manual actuator shall be installed so as to be easily reached by the miner at the jobsite or by persons approaching the equipment.

(b) Sensors shall, where practicable, be installed in accordance with the recommendations set forth in National Fire Code No. 72A ''Local Protective Signaling Systems'' (NFPA No. 72A–1967).

(c) On unattended equipment the fire suppression device shall operate independently of the power to the main motor (or equivalent) so it will remain operative if the circuit breakers (or other protective device) actuates. On attended equipment powered through a trailing cable the fire suppression device shall operate independently of the electrical power provided by the cable.

(d) Point-type sensors (such as thermocouple, bimetallic strip, or rate of temperature rise) located in ventilated passageways shall be installed downwind from the equipment to be protected.

(e) Sensor systems shall include a device or method for determining their operative condition.

[37 FR 15301, July 29, 1972]

§ 75.1107–5 Electrical components of fire suppression devices; permissibility requirements.

The electrical components of each fire suppression device used on permissible equipment inby the last open crosscut or on equipment in the return airways of any coal mine shall be permissible or intrinsically safe and such components shall be maintained in permissible or intrinsically safe condition.

[37 FR 15302, July 29, 1972]

§ 75.1107–6 Capacity of fire suppression devices; location and direction of nozzles.

(a) Each fire suppression device shall be:

(1) Adequate in size and capacity to extinguish potential fires in or on the equipment protected; and

(2) Suitable for the atmospheric conditions surrounding the equipment protected (e.g., air velocity, type, and proximity of adjacent combustible material); and

(3) Rugged enough to withstand rough usage and vibration when installed on mining equipment.

(b) The extinguishant-discharge nozzles of each fire suppression device shall, where practicable, be located so as to take advantage of mine ventilation air currents. The fire suppression device may be of the internal injection, inundating, or combination type. Where fire control is achieved by internal injection, or combination of internal injection and inundation, hazardous locations shall be enclosed to minimize runoff and overshoot of the extinguishing agent and the extinguishing agent shall be directed onto:

(1) Cable reel compartments and electrical cables on the equipment which are subject to flexing or to external damage; and

(2) All hydraulic components on the equipment which are exposed directly to or located in the immediate vicinity of electrical cables which are subject to flexing or to damage.

[37 FR 15302, July 29, 1972]

§ 75.1107–7 Water spray devices; capacity; water supply; minimum requirements.

(a) Where water spray devices are used on unattended underground equipment the rate of flow shall be at least 0.25 gallon per minute per square foot over the top surface area of the equipment and the supply of water shall be adequate to provide the required flow of water for 10 minutes.

(b) Where water spray devices are used for inundating attended underground equipment the rate of flow shall be at least 0.18 gallon per minute per square foot over the top surface area of the equipment (excluding conveyors, cutters, and gathering heads), and the supply of water shall be adequate to provide the required flow of water for 10 minutes.

(c) Where water is used for internal injection on attended equipment the total quantity of water shall be at least 4.5 gallons times the number of hazardous locations; however, the total minimum amount of water shall not be less than the following:

Type of equipment	Water in gallons
(1) Cutting machines	36
(2) Continuous miners	36
(3) Haulage vehicles	22.5
(4) All other attended equipment	18.0

The rate of flow shall be not less than 7 gallons per minute.

(d) Where water is used in a combination internal injection and inundation system on attended equipment the rate of flow shall be at least 0.12 gallon per minute per square foot over the top surface area of the equipment (excluding conveyors, cutters, and gathering heads), and the supply of water shall be adequate to provide the required flow of water for 10 minutes.

(e) On equipment provided with a cable reel and an internal injection or combination-type system, the amount of water discharged into the cable reel compartments shall be approximately 25 percent of the amount required to be discharged by the system, however, such quantity need not exceed 10 gallons.

(f) Liquid chemicals may be used, as approved by the Secretary in self-contained fire suppression devices. Such liquid chemicals shall be nontoxic and when applied to a fire shall not produce excessive toxic compounds. The quantity of liquid chemicals required shall be proportionately less than water as based on equivalency ratings established by the Secretary or equivalency ratings made by a nationally recognized agency approved by the Secretary.

[37 FR 15302, July 29, 1972]

§ 75.1107–8 Fire suppression devices; extinguishant supply systems.

(a) Fire suppression systems using water or liquid chemical to protect attended equipment shall:

(1) Be maintained at a pressure consistent with the pipe, fittings, valves, and nozzles used in the system.

(2) Be located so as to be protected against damage during operation of the equipment protected.

(3) Employ liquid which is free from excessive sediment and noncorrosive to the system.

(4) Include strainers equipped with flush-out connections or equivalent protective devices and a rising stem or other visual indicator-type shutoff valve.

(b) Water supplies for fire suppression devices installed on underground equipment may be maintained in mounted water tanks or by connection to water mains. Such water supplies shall be continuously connected to the fire suppression device whenever the equipment is connected to a power source, except for a reasonable time for changing hose connections to hydrants while the machine is stopped in a ventilated passageway.

[37 FR 15302, July 29, 1972]

§ 75.1107–9 Dry chemical devices; capacity; minimum requirements.

(a) Dry chemical fire extinguishing systems used on underground equipment shall be of the multipurpose powder-type and shall include the following:

(1) The system including all hose and nozzles shall be protected against the entrance of moisture, dust, or dirt;

(2) The system shall be guarded against damage during operation of the equipment protected;

(3) Hose and pipe shall be as short as possible; the distance between the chemical container and furthest nozzle shall not exceed 50 feet;

(4) Hose, piping, and fittings between the actuator and the chemical container shall have a bursting pressure of 500 pounds per square inch (gage) or higher; the hose, piping, and fittings between the chemical container and the nozzles shall have a bursting pressure of 300 pounds per square inch (gage) or higher and

(5) The system shall discharge in 1 minute or less, for quantities less than 50 pounds (nominal)[1] and in less than 2 minutes for quantities more than 50 pounds;

(b) On unattended underground equipment, the number of pounds of dry chemical employed by the system shall be not less than 1 pound per square foot of top surface area of the equipment; however, the minimum amount in any system shall be 20 pounds (nominal). The discharge shall be directed into and on potentially hazardous locations of the equipment.

(c) On attended underground equipment, the number of pounds (nominal) employed by the system shall equal 5 times the total number of hazardous locations; however, the minimum amount in any system shall not be less than the following, except that systems on haulage vehicles installed prior to the effective date of this section may contain 20 pounds (nominal).

Type of equipment	Dry chemical pounds (nominal)
(1) Cutting machines	40
(2) Continuous miners	40
(3) Haulage vehicles	30
(4) All other attended equipment	20

(d) The amount of dry chemical discharged into the cable reel compartments of attended underground equipment shall be approximately 25 percent of the total amount required to be discharged by the system; however, the quantity discharged into cable reel compartments need not exceed 10 pounds.

[37 FR 15302, July 29, 1972]

§ 75.1107–10 High expansion foam devices; minimum capacity.

(a) On unattended underground equipment the amount of water delivered as high expansion foam for a period of approximately 20 minutes shall be not less than 0.06 gallon per minute per square foot of surface area of the equipment protected; however, the minimum total rate for any system shall be not less than 3 gallons per minute.

(b) On attended underground equipment, foam may be delivered by internal injection, inundation, or combination-type systems. Each system shall deliver water as foam for a minimum of 10 minutes. For internal injection, the rate of water application as high expansion foam shall be not less than 0.5 gallon per minute per hazardous location; however, the minimum total rate shall be not less than 2 gallons per minute. For inundation, the rate of water application as high expansion foam shall be not less than 0.05 gallon per minute per square foot of top surface area of the equipment protected; however, the minimum total rate shall be not less than 5 gallons of water per minute.

(c) In combined internal injection and inundation systems the rate of water applied as foam shall not be less than 0.035 gallon per minute per square

[1] Many dry chemical systems were originally designed for sodium bicarbonate before all-purpose chemical (ammonium phosphate) was shown to be more effective. Sodium bicarbonate is denser than ammonium phosphate; hence, for example, a 50-pound system designed for the sodium bicarbonate will hold slightly more by weight than all-purpose dry chemical (ammonium phosphate) by weight. The word ''nominal'' is used in § 75.1107–9 to express the approximate weight in pounds of all-purpose dry chemical.

foot of top surface area of the equipment protected; however, the minimum total rate shall not be less than 3.5 gallons of water per minute.

(d) Where internal injection is employed, the amount of water discharged as high expansion foam into the cable reel compartments of underground equipment regularly operated by a miner shall be approximately 25 percent of the total amount required to be discharged by the system; however, the quantity of water discharged as foam into the cable reel compartment need not exceed 1.5 gallons.

[37 FR 15303, July 29, 1972]

§ 75.1107–11 Extinguishing agents; requirements on mining equipment employed in low coal.

On mining equipment no more than 32 inches high, the quantity of extinguishing agent required under the provisions of §§ 75.1107–7, 75.1107–9, and 75.1107–10 may be reduced by one-fourth if space limitations on the equipment require such reduction.

[37 FR 15303, July 29, 1972]

§ 75.1107–12 Inerting of mine atmosphere prohibited.

No fire suppression device designed to control fire by total flooding shall be installed to protect unattended underground equipment except in enclosed dead-end entries or enclosed rooms.

[37 FR 15303, July 29, 1972]

§ 75.1107–13 Approval of other fire suppression devices.

Notwithstanding the provisions of §§ 75.1107–1 through 75.1107–12 the District Manager for the District in which the mine is located may approve any other fire suppression system or device which provides substantially equivalent protection as would be achieved through compliance with those sections: *Provided,* That no such system or device shall be approved which does not meet the following minimum criteria:

(a) Components shall be approved by the Secretary, or where appropriate be listed as approved by a nationally recognized agency approved by the Secretary.

(b) The fire suppression equipment shall be designed to withstand the rigors of the mine environment. Where used, pressure vessels shall conform with the requirements of section 3603, 3606, 3607, 3707, and 3708 of National Fire Code No. 22 ''Water Tanks for Private Fire Protection'' (NFPA No. 22–1971).

(c) The cover of hose of fire suppression devices, if used on the protected equipment, shall meet the flame-resistant requirements of Part 18 of this chapter (Bureau of Mines Schedule 2G).

(d) Extinguishing agents shall not create a serious toxic or other hazard to the miners.

(e) The electrical components of the fire suppression device shall meet the requirements for electrical components of the mining machine.

(f) Where used, manual actuators for initiating the operation of the fire suppression device shall be readily accessible to the machine operator. On unattended equipment, an automatic as well as a manual actuator shall be provided.

(g) On unattended equipment the fire suppression device shall operate independently of the power to the main motor (or equivalent) so it will remain operative if the circuit breakers (or other protective device) actuates. On attended equipment powered through a trailing cable the fire suppression device shall operate independently of the electrical power provided by the cable.

(h) On unattended equipment, the sensor system shall have a means for checking its operative condition.

(i) The fire suppression agent shall be directed at locations where the greatest potential fire hazard exists. Cable reel compartments shall receive approximately twice the quantity of extinguishing agent as each other hazardous location.

(j) The rate of application of the fire suppression agent shall minimize the time for quenching and the total quantity applied shall be sufficient to quench a fire in its incipient stage.

(k) The effectiveness of the quenching agent, together with the total quantity of agent and its rate of application shall provide equivalent protection to the water, dry powder, or foam

systems described in §§ 75.1107–7, 75.1107–9, and 75.1107–10.

(l) The fire suppression device shall be operable at all times electrical power is connected to the mining machine, except during tramming when the machine is in a ventilated passageway, the water hose if used, may be switched from one hydrant to another in a reasonable time and except in systems meeting the minimum special criteria set forth in paragraph (m) of this section.

(m) Systems for attended equipment which are not continuously connected to a water supply shall not be approved unless they meet the following minimum criteria:

(1) The machine shall be equipped with a firehose at least 50 feet in length which is continuously connected to the machine-mounted portion of the system.

(2) Hydrants in proximity to the area where the machine is to be used shall be equipped with sufficient hose to reach the machine at any time it is connected to a power source.

(3) The machine shall be used only where the operator (or other person) will always be in ventilated air uncontaminated by smoke and hot gases from the machine fire while extending the machine-mounted hose to connect with the hydrant-mounted hose.

(4) The machine and hydrant hoses shall be readily accessible so that the connection between the machine-mounted hose and the hydrant hose can be made and water flow achieved in not more than 3 minutes under actual mining conditions for any location of the machine while electric power is connected.

(5) The rate of water flow at the machine shall provide a minimum of 0.12 gallon of water per minute per square foot of top surface area (excluding conveyors, cutters, and gathering heads). The water shall discharge to all hazardous locations on the machine.

(6) Hose, if used on the machine, in addition to meeting the flame resistant requirements for the cover of a hose provided in §§ 75.1107–3(b) and 75.1107–13(c) shall have a minimum burst pressure 4 times that of the static water pressure at the mining machine. Fabric braid hose shall have at least two braids, and wire braid hose shall have at least a single braid.

(7) In addition to the hose located at the hydrant (which is intended to be connected to the hose on the machine) the firefighting equipment required by § 75.1100–2(a) shall be maintained.

(8) A sufficient number of trained miners shall be kept on the section when the machine is in use to connect the machine hose to the hydrant hose and achieve water flow in not more than 3 minutes.

[37 FR 15303, July 29, 1972]

§ 75.1107–14 Guards and handrails; requirements where fire suppression devices are employed.

All unattended underground equipment provided with fire suppression devices which are mounted in dead end entries, enclosed rooms or other potentially hazardous locations shall be equipped with adequate guards at moving or rotating components. Handrails or other effective protective devices shall be installed at such locations where necessary to facilitate rapid egress from the area surrounding such equipment.

[37 FR 15303, July 29, 1972]

§ 75.1107–15 Fire suppression devices; hazards; training of miners.

Each operator shall instruct all miners normally assigned to the active workings of the mine with respect to any hazards inherent in the operation of all fire suppression devices installed in accordance with § 75.1107–1 and, where appropriate, the safeguards available at each such installation.

[37 FR 15303, July 29, 1972]

§ 75.1107–16 Inspection of fire suppression devices.

(a) All fire suppression devices shall be visually inspected at least once each week by a person qualified to make such inspections.

(b) Each fire suppression device shall be tested and maintained in accordance with the requirements specified in the appropriate National Fire Code listed as follows for the type and kind of device used:

National Fire Code No. 11A ''High Expansion Foam Systems'' (NFPA No. 11A—1970).
National Fire Code No. 13A ''Care and Maintenance of Sprinkler Systems'' (NFPA No. 13A—1971).
National Fire Code No. 15 ''Water Spray Fixed Systems for Fire Protection'' (NFPA No. 15—1969).
National Fire Code No. 17 ''Dry Chemical Extinguishing Systems'' (NFPA No. 17—1969).
National Fire Code No. 72A ''Local Protective Signaling Systems'' (NFPA No. 72A—1967).
National Fire Code No. 198 ''Care of Fire Hose'' (NFPA No. 198—1969).

(c) A record of the inspections required by this section shall be maintained by the operator. The record of the weekly inspections may be maintained at an appropriate location by each fire suppression device.

[37 FR 15304, July 29, 1972, as amended at 60 FR 33723, June 29, 1995]

§ 75.1107–17 Incorporation by reference; availability of publications.

In accordance with 5 U.S.C. 552(a), the technical publications to which reference is made in §§ 75.1107–1 through 75.1107–16, and which have been prepared by organizations other than the Bureau of Mines or the Mine Safety and Health Administration, are hereby incorporated by reference and made a part hereof. The incorporated publications are available for examination at each MSHA Coal Mine Safety and Health district office. National Fire Codes are available from the National Fire Protection Association, 11 Tracy Drive, Avon, MA 02322; Telephone: 800–344–3555 (toll free); *http://www.nfpa.org*.

[37 FR 15304, July 29, 1972, as amended at 71 FR 16669, Apr. 3, 2006]

§ 75.1108 Approved conveyor belts.

(a) Until December 31, 2009 conveyor belts placed in service in underground coal mines shall be:

(1) Approved under Part 14; or

(2) Accepted under Part 18.

(b) Effective December 31, 2009 conveyor belts placed in service in underground coal mines shall be approved under Part 14. If MSHA determines that Part 14 approved belt is not available, the Agency will consider an extension of the effective date.

(c) Effective December 31, 2018 all conveyor belts used in underground coal mines shall be approved under Part 14.

[73 FR 80616, Dec. 31, 2008]

Subpart M—Maps

§ 75.1200 Mine map.

[STATUTORY PROVISIONS]

The operator of a coal mine shall have in a fireproof repository located in an area on the surface of the mine chosen by the mine operator to minimize the danger of destruction by fire or other hazard, an accurate and up-to-date map of such mine drawn on scale. Such map shall show:

(a) The active workings;

(b) All pillared, worked out, and abandoned areas, except as provided in this section;

(c) Entries and aircourses with the direction of airflow indicated by arrows;

(d) Contour lines of all elevations;

(e) Elevations of all main and cross or side entries;

(f) Dip of the coalbed;

(g) Escapeways;

(h) Adjacent mine workings within 1,000 feet;

(i) Mines above or below;

(j) Water pools above; and

(k) Either producing or abandoned oil and gas wells located within 500 feet of such mine and any underground area of such mine; and,

(l) Such other information as the Secretary may require. Such map shall identify those areas of the mine which have been pillared, worked out, or abandoned, which are inaccessible or cannot be entered safely and on which no information is available.

§ 75.1200–1 Additional information on mine map.

Additional information required to be shown on mine maps under § 75.1200 shall include the following:

(a) Name and address of the mine;

(b) The scale and orientation of the map;

(c) The property or boundary lines of the mine;

(d) All drill holes that penetrate the coalbed being mined;

(e) All shaft, slope, drift, and tunnel openings and auger and strip mined areas of the coalbed being mined;

(f) The location of all surface mine ventilation fans; the location may be designated on the mine map by symbols;

(g) The location of railroad tracks and public highways leading to the mine, and mine buildings of a permanent nature with identifying names shown;

(h) The location and description of at least two permanent base line points coordinated with the underground and surface mine traverses, and the location and description of at least two permanent elevation bench marks used in connection with establishing or referencing mine elevation surveys;

(i) The location of any body of water dammed in the mine or held back in any portion of the mine; provided, however, such bodies of water may be shown on overlays or tracings attached to the mine maps used to show contour lines as provided under paragraph (m) of this section;

(j) The elevations of tops and bottoms of shafts and slopes, and the floor at the entrance to drift and tunnel openings;

(k) The elevation of the floor at intervals of not more than 200 feet in:

(1) At least one entry of each working section, and main and cross entries;

(2) The last line of open crosscuts of each working section, and main and cross entries before such sections and main and cross entries are abandoned;

(3) Rooms advancing toward or adjacent to property or boundary lines or adjacent mines;

(l) The elevation of any body of water dammed in the mine or held back in any portion of the mine; and,

(m) Contour lines passing through whole number elevations of the coalbed being mined. The spacing of such lines shall not exceed 10-foot elevation levels, except that a broader spacing of contour lines may be approved by the District Manager for steeply-pitching coalbeds. Contour lines may be placed on overlays or tracings attached to mine maps.

(n) The locations of refuge alternatives.

[35 FR 17890, Nov. 20, 1970, as amended at 73 FR 80697, Dec. 31, 2008]

§ 75.1200–2 Accuracy and scale of mine maps.

(a) The scale of mine maps submitted to the Secretary shall not be less than 100 or more than 500 feet to the inch.

(b) Mine traverses shall be advanced by closed loop methods of traversing or other equally accurate methods of traversing.

§ 75.1201 Certification.

[STATUTORY PROVISIONS]

Such map shall be made or certified by a registered engineer or a registered surveyor of the State in which the mine is located.

§ 75.1202 Temporary notations, revisions, and supplements.

[STATUTORY PROVISIONS]

Such map shall be kept up-to-date by temporary notations and such map shall be revised and supplemented at intervals prescribed by the Secretary on the basis of a survey made or certified by such engineer or surveyor.

§ 75.1202–1 Temporary notations, revisions, and supplements.

(a) Mine maps shall be revised and supplemented at intervals of not more than 6 months.

(b) Temporary notations shall include:

(1) The location of each working face of each working place;

(2) Pillars mined or other such second mining;

(3) Permanent ventilation controls constructed or removed, such as seals, overcasts, undercasts, regulators, and permanent stoppings, and the direction of air currents indicated;

(4) Escapeways and refuge alternatives designated by means of symbols.

[35 FR 17890, Nov. 20, 1970, as amended at 73 FR 80697, Dec. 31, 2008]

§ 75.1203 Availability of mine map.

[STATUTORY PROVISIONS]

The coal mine map and any revision and supplement thereof shall be available for inspection by the Secretary or his authorized representative, by coal mine inspectors of the State in which the mine is located, by miners in the mine and their representatives and by operators of adjacent coal mines and by persons owning, leasing, or residing on surface areas of such mines or areas adjacent to such mines. The operator shall furnish to the Secretary or his authorized representative and to the Secretary of Housing and Urban Development, upon request, one or more copies of such maps and any revision and supplement thereof. Such map or revision and supplement thereof shall be kept confidential and its contents shall not be divulged to any other person, except to the extent necessary to carry out the provisions of this Act and in connection with the functions and responsibilities of the Secretary of Housing and Urban Development.

§ 75.1204 Mine closure; filing of map with Secretary.

[STATUTORY PROVISIONS]

Whenever an operator permanently closes or abandons a coal mine, or temporarily closes a coal mine for a period of more than 90 days, he shall promptly notify the Secretary of such closure. Within 60 days of the permanent closure or abandonment of the mine, or, when the mine is temporarily closed, upon the expiration of a period of 90 days from the date of closure, the operator shall file with the Secretary a copy of the mine map revised and supplemented to the date of the closure. Such copy of the mine map shall be certified by a registered surveyor or registered engineer of the State in which the mine is located and shall be available for public inspection.

[35 FR 17890, Nov. 20, 1970, as amended at 60 FR 33723, June 29, 1995]

§ 75.1204–1 Places to give notice and file maps.

Operators shall give notice of mine closures and file copies of maps with the Coal Mine Safety and Health District Office for the district in which the mine is located.

[35 FR 17890, Nov. 20, 1970, as amended at 60 FR 33723, June 29, 1995; 71 FR 16669, Apr. 3, 2006]

Subpart N—Explosives and Blasting

SOURCE: 53 FR 46786, Nov. 18, 1988, unless otherwise noted.

§ 75.1300 Definitions.

The following definitions apply in this subpart.

Approval. A document issued by MSHA which states that an explosive or explosive unit has met the requirements of this part and which authorizes an approval marking identifying the explosive or explosive unit as approved as permissible.

Battery starting. The use of unconfined explosives to start the flow of coal down a breast or chute in an anthracite mine.

Blasting off the solid. Blasting the working face without providing a second free face by cutting, shearing or other method before blasting.

Instantaneous detonator. An electric detonator that fires within 6 milliseconds after application of the firing current.

Laminated partition. A partition composed of the following material and minimum nominal dimensions: ½-inch thick plywood, ½-inch thick gypsum wall board, ⅛-inch thick low carbon steel and ¼-inch thick plywood, bonded together in that order.

Opener hole. The first hole or holes fired in a round blasted off the solid to create an additional free face.

Permissible blasting unit. A device that has been approved by MSHA and that is used for firing electric detonators.

Permissible explosive. Any substance, compound or mixture which is approved by MSHA and whose primary purpose is to function by explosion.

Round. A group of boreholes fired or intended to be fired in a continuous sequence with one application of the firing current.

Sheathed explosive unit. A device consisting of an approved or permissible explosive covered by a sheath encased

in a sealed covering and designed to be fired outside the confines of a borehole.

Short-delay electric detonator. An electric detonator with a designated delay period of 25 to 1,000 milliseconds.

§ 75.1301 Qualified person.

(a) A qualified person under this subpart is a person who—

(1) Is certified or qualified to use explosives by the State in which the mine is located provided that the State requires a demonstration of ability to safely use permissible explosives as prescribed by this subpart effective January 17, 1989; or

(2) In States that do not certify or qualify persons to use explosives required by this section, has at least 1 year of experience working in an underground coal mine that includes direct involvement with procedures for handling, loading, and preparing explosives for blasting and demonstrates to an authorized representative of the Secretary the ability to use permissible explosives safely.

(b) Persons qualified or certified by a State to use permissible explosives in underground coal mines as of May 17, 1989, are considered qualified under this section even though their State program did not contain a demonstration of ability requirement.

[35 FR 17890, Nov. 20, 1970, as amended at 56 FR 51616, Oct. 11, 1991; 60 FR 33723, June 29, 1995]

§ 75.1310 Explosives and blasting equipment.

(a) Only permissible explosives, approved sheathed explosive units, and permissible blasting units shall be taken or used underground.

(b) Black blasting powder, aluminum-cased detonators, aluminum-alloy-cased detonators, detonators with aluminum leg wires, and safety fuses shall not be taken or used underground.

(c) Explosives shall be fired only with a permissible blasting unit used in a manner consistent with its approval. Blasting units approved by MSHA that have approval labels specifying use with short-delay detonators with delay periods between 25–500 milliseconds are accepted to fire short-delay detonators up to 1,000 milliseconds, instantaneous detonators and long period delay detonators for anthracite mines.

(d) Permissible explosives and sheathed explosive units shall not be used underground when they are below the minimum product firing temperature specified by the approval. Explosives previously approved which do not specify a minimum firing temperature are permissible for use so long as the present approval is maintained.

(e) Electric detonators shall be compatible with the blasting unit and have sufficient strength to initiate the explosives being used.

§ 75.1311 Transporting explosives and detonators.

(a) When explosives and detonators are to be transported underground—

(1) They shall be enclosed in separate, substantially constructed containers made of nonconductive material, with no metal or other conductive materials exposed inside, except as specified in paragraph (d) of this section; and

(2) Each container of explosives and of detonators shall be indelibly marked with a readily visible warning identifying the contents.

(b) When explosives and detonators are transported by any cars or vehicles—

(1) The cars or vehicles shall be marked with warnings to identify the contents as explosive. The warnings shall be readily visible to miners approaching from any direction and in indelible letters;

(2) Explosives and detonators shall be transported either in separate cars or vehicles, or if in the same cars or vehicles as follows:

(i) Class A and Class C detonators in quantities greater than 1,000 shall be kept in the original containers as shipped from the manufacturer and separated from explosives by a hardwood partition at least 4 inches thick, a laminated partition or equivalent; and

(ii) Class A and Class C detonators in quantities of no more than 1,000 shall be separated from explosives by a hardwood partition at least 4 inches thick, a laminated partition or equivalent.

(3) No persons, other than those necessary to operate the equipment or to

accompany the explosives and detonators, shall be transported with explosives and detonators, and

(4) When explosives and detonators are transported using trolley locomotives—

(i) Trips carrying explosives and detonators shall be separated from all other mantrips by at least a 5-minute interval; and

(ii) Cars containing explosives or detonators shall be separated from the locomotives by at least one car that is empty or that contains noncombustible materials.

(c) When explosives and detonators are transported on conveyor belts—

(1) Containers of explosives shall be separated from containers of detonators by at least 50 feet;

(2) At least 6 inches of clearance shall be maintained between the top of any container of explosives or container of detonators and the mine roof or other obstruction;

(3) Except when persons are riding the belt to accompany explosives or detonators, a person shall be at each transfer point between belts and at the unloading location; and

(4) Conveyor belts shall be stopped before explosives or detonators are loaded or unloaded.

(d) When explosives and detonators are transported by hand they shall be carried in separate, nonconductive, closed containers.

§ 75.1312 Explosives and detonators in underground magazines.

(a) The quantity of explosives kept underground shall not be more than is needed for 48 hours of use.

(b) Except as provided in § 75.1313, explosives and detonators taken underground shall be kept in—

(1) Separate, closed magazines at least 5 feet apart; or

(2) The same closed magazine when—

(i) Separated by a hardwood partition at least 4 inches thick; or

(ii) Separated by a laminated partition; or

(iii) Separated by a device that is equivalent.

(c) Only explosives and detonators shall be kept in underground magazines.

(d) Magazines shall be substantially constructed and all interior surfaces shall be made of nonconductive material, with no metal or other conductive material exposed inside.

(e) All magazines shall be—

(1) Located at least 25 feet from roadways and any source of electric current;

(2) Located out of the direct line of the forces from blasting; and

(3) Kept as dry as practicable.

(f) Magazine locations shall be posted with indelibly marked and readily visible warnings indicating the presence of explosives.

(g) Only materials and equipment to be used in blasting shall be stored at magazine locations.

§ 75.1313 Explosives and detonators outside of magazines.

(a) The quantity of explosives outside a magazine for use in a working section or other area where blasting is to be performed shall—

(1) Not exceed 100 pounds; or

(2) Not exceed the amount necessary to blast one round when more than 100 pounds of explosives is required.

(b) Explosives and detonators outside a magazine that are not being transported or prepared for loading boreholes shall be kept in closed separate containers made of nonconductive material with no metal or other conductive material exposed inside and the containers shall be—

(1) At least 15 feet from any source of electric current;

(2) Out of the direct line of the forces from blasting;

(3) In a location to prevent damage by mobile equipment; and

(4) Kept as dry as practicable.

(c) Explosives and detonators not used during the shift shall be returned to a magazine by the end of the shift.

§ 75.1314 Sheathed explosive units.

(a) A separate instantaneous detonator shall be used to fire each sheathed explosive unit.

(b) Sheathed explosive units shall be primed and placed in position for firing only by a qualified person or a person working in the presence of and under the direction of a qualified person. To prime a sheathed explosive unit, the

entire detonator shall be inserted into the detonator well of the unit and be held securely in place.

(c) Sheathed explosive units shall not be primed until immediately before the units are placed where they are to be fired. A sheathed explosive unit shall not be primed if it is damaged or deteriorated.

(d) Except in anthracite mines, rock dust shall be applied to the roof, ribs and floor within a 40–foot radius of the location where the sheathed explosive units are to be fired.

(e) No more than three sheathed explosive units shall be fired at one time.

(f) No sheathed explosive unit shall be fired in contact with another sheathed explosive unit.

§ 75.1315 Boreholes for explosives.

(a) All explosives fired underground shall be confined in boreholes except—

(1) Sheathed explosives units and other explosive units approved by MSHA for firing outside the confines of a borehole; and

(2) Shots fired in anthracite mines for battery starting or for blasting coal overhangs. No person shall go inside a battery to start the flow of material.

(b) Each borehole in coal for explosives shall be at least 24 inches from any other borehole and from any free face, unless prohibited by the thickness of the coal seam.

(c) Each borehole in rock for explosives shall be at least 18 inches from any other borehole in rock, at least 24 inches from any other borehole in coal, and at least 18 inches from any free face.

(d) No borehole that has contained explosives shall be used for starting any other hole.

(e) When blasting slab rounds off the solid, opener holes shall not be drilled beyond the rib line.

(f) When coal is cut for blasting, the coal shall be supported if necessary to maintain the stability of the column of explosives in each borehole.

§ 75.1316 Preparation before blasting.

(a)(1) All nonbattery-powered electric equipment, including cables, located within 50 feet from boreholes to be loaded with explosives or the sites where sheathed explosive units are to be placed and fired shall be deenergized or removed to at least 50 feet from these locations before priming of explosives. Battery-powered equipment shall be removed to at least 50 feet from these locations before priming of explosives.

(2) As an alternative to paragraph (a)(1) of this section, electric equipment, including cables, need not be deenergized or removed if located at least 25 feet from these locations provided stray current tests conducted prior to priming the explosives detect stray currents of 0.05 ampere or less through a 1-ohm resistor.

(i) Tests shall be made at floor locations on the perimeter, on energized equipment frames and on repaired areas of energized cables within the area between 25 to 50 feet from the locations where the explosives are to be primed.

(ii) Tests shall be conducted using a blasting multimeter or other instrument specifically designed for such use.

(3) The blasting cable or detonator circuitry shall not come in contact with energized electric equipment, including cables.

(b) Before loading boreholes with explosives, each borehole shall be cleared and its depth and direction determined.

(c) No borehole drilled beyond the depth of cut coal shall be loaded with explosives unless that portion of the borehole deeper than the cut is tamped with noncombustible material.

(d) When two working faces are approaching each other, cutting, drilling and blasting shall be done at only one working face at a time if the two faces are within 25 feet of each other.

[35 FR 17890, Nov. 20, 1970, as amended at 56 FR 51616, Oct. 11, 1991]

§ 75.1317 Primer cartridges.

(a) Primer cartridges shall be primed and loaded only by a qualified person or a person working in the presence of and under the direction of a qualified person.

(b) Primer cartridges shall not be primed until immediately before loading boreholes.

(c) Only a nonsparking punch shall be used when priming explosive cartridges.

(d) Detonators shall be completely within and parallel to the length of the cartridge and shall be secured by half-hitching the leg wires around the cartridge or secured by an equally effective method.

§ 75.1318 Loading boreholes.

(a) Explosives shall be loaded by a qualified person or a person working in the presence of and under the direction of a qualified person.

(b) When boreholes are being loaded, no other work except that necessary to protect persons shall be done in the working place or other area where blasting is to be performed.

(c) When loading boreholes drilled at an angle of 45 degrees or greater from the horizontal in solid rock or loading long holes drilled upward in anthracite mines—

(1) The first cartridge in each borehole shall be the primer cartridge with the end of the cartridge containing the detonator facing the back of the borehole; and

(2) The explosive cartridges shall be loaded in a manner that provides contact between each cartridge in the borehole.

(d) When loading other boreholes—

(1) The primer cartridge shall be the first cartridge loaded in the borehole;

(2) The end of the cartridge in which the detonator is inserted shall face the back of the borehole; and

(3) The primer cartridge and other explosives shall be pushed to the back of the borehole in a continuous column with no cartridge being deliberately crushed or deformed.

(e) An explosive shall not be loaded into a borehole if it is damaged, deteriorated or if the cartridge is incompletely filled.

(f) Explosives of different brands, types or cartridge diameters shall not be loaded in the same borehole.

(g) Only nonconductive, nonsparking tamping poles shall be used for loading and tamping boreholes. The use of nonsparking connecting devices for extendable tamping poles is permitted.

[53 FR 46786, Nov. 18, 1988; 54 FR 888, Jan. 10, 1989]

§ 75.1319 Weight of explosives permitted in boreholes in bituminous and lignite mines.

(a) The total weight of explosives loaded in any borehole in bituminous and lignite mines shall not exceed 3 pounds except when blasting solid rock in its natural deposit.

(b) The total weight of explosives loaded in a borehole less than 6 feet deep in bituminous and lignite mines shall be reduced by ½ pound for each foot of borehole less than 6 feet.

§ 75.1320 Multiple-shot blasting.

(a) No more than 20 boreholes shall be fired in a round unless permitted in writing by the District Manager under § 75.1321.

(b) Instantaneous detonators shall not be used in the same circuit with delay detonators in any underground coal mine.

(c) In bituminous and lignite mines, only detonators with delay periods of 1,000 milliseconds or less shall be used.

(d) When blasting in anthracite mines, each borehole in a round shall be initiated in sequence from the opener hole or holes.

(e) Arrangement of detonator delay periods for bituminous and lignite mines shall be as follows:

(1) When blasting cut coal—

(i) The first shot or shots fired in a round shall be initiated in the row nearest the kerf or the row or rows nearest the shear; and

(ii) After the first shot or shots, the interval between the designated delay periods of successive shots shall be at least 50 milliseconds but not more than 100 milliseconds.

(2) When blasting coal off the solid—

(i) Each shot in the round shall be initiated in sequence from the opener hole or holes; and

(ii) After the first shot or shots, the interval between the designated delay periods of successive shots shall be at least 50 milliseconds but not more than 100 milliseconds.

§ 75.1321 Permits for firing more than 20 boreholes and for use of nonpermissible blasting units.

(a) Applications for permits for firing more than 20 boreholes in a round and for the use of nonpermissible blasting

units shall be submitted in writing to the District Manager for the district in which the mine is located and shall contain the following information:

(1) The name and address of the mine;

(2) The active workings in the mine affected by the permit and the approximate number of boreholes to be fired;

(3) The period of time during which the permit will apply;

(4) The nature of the development or construction for which they will be used, e.g., overcasts, undercasts, track grading, roof brushing or boom holes;

(5) A plan, proposed by the operator designed to protect miners in the mine from the hazards of methane and other explosive gases during each multiple shot, e.g., changes in the mine ventilation system, provisions for auxiliary ventilation and any other safeguards necessary to minimize such hazards;

(6) A statement of the specific hazards anticipated by the operator in blasting for overcasts, undercasts, track grading, brushing of roof, boom holes or other unusual blasting situations such as coalbeds of abnormal thickness; and

(7) The method to be employed to avoid the dangers anticipated during development or construction which will ensure the protection of life and the prevention of injuries to the miners exposed to such underground blasting.

(b) The District Manager may permit the firing of more than 20 boreholes of permissible explosives in a round where he has determined that it is necessary to reduce the overall hazard to which miners are exposed during underground blasting. He may also permit the use of nonpermissible blasting units if he finds that a permissible blasting unit does not have adequate blasting capacity and that the use of such permissible units will create any of the following development or construction hazards:

(1) Exposure to disturbed roof in an adjacent cavity while scaling and supporting the remaining roof prior to wiring a new series of boreholes;

(2) Exposure to underburden boreholes where prior rounds have removed the burden adjacent to a remaining borehole;

(3) Exposure to an unsupported roof while redrilling large fragmented roof rock following the loss of predrilled boreholes during earlier blasting operations; or

(4) Any other hazard created by the use of permissible blasting units during underground development or construction.

(c) Permits shall be issued on a mine-by-mine basis for periods of time to be specified by the District Manager.

(d) Permits issued under this section shall specify and include as a condition of their use, any safeguards, in addition to those proposed by the operator, which the District Manager issuing such permit has determined will be required to ensure the welfare of the miners employed in the mine at the time of the blasting permitted.

[35 FR 17890, Nov. 20, 1970, as amended at 60 FR 33723, June 29, 1995]

§ 75.1322 Stemming boreholes.

(a) Only noncombustible material shall be used for stemming boreholes.

(b) Stemming materials other than water stemming bags shall be tamped to fill the entire cross sectional area of the borehole.

(c) Stemming material shall contact the explosive cartridge nearest the collar of the borehole.

(d) Each borehole 4 or more feet deep shall be stemmed for at least 24 inches.

(e) Each borehole less than 4 feet deep shall be stemmed for at least half the depth of the borehole.

(f) When blasting off the solid in bituminous and lignite mines, only pliable clay dummies shall be used for stemming.

(g) The diameter of a water stemming bag shall be within ¼ of an inch of the diameter of the drill bit used to drill the borehole.

(h) Water stemming bags shall be constructed of tear-resistant and flame-resistant material and be capable of withstanding a 3-foot drop when filled without rupturing or developing leaks.

§ 75.1323 Blasting circuits.

(a) Blasting circuits shall be protected from sources of stray electric current.

(b) Detonators made by different manufacturers shall not be combined in the same blasting circuit.

(c) Detonator leg wires shall be shunted until connected into the blasting circuit.

(d) Blasting cables shall be—

(1) Well insulated, copper wire of a diameter not smaller than 18-gauge; and

(2) Long enough to permit the round to be fired from a safe location that is around at least one corner from the blasting area.

(e) Blasting cables shall be shunted until immediately before firing, except when testing for circuit continuity.

(f) Wire used between the blasting cable and detonator circuitry shall—

(1) Be undamaged;

(2) Be well insulated;

(3) Have a resistance no greater than 20-gauge copper wire; and

(4) Be not more than 30 feet long.

(g) Each wire connection in a blasting circuit shall be—

(1) Properly spliced; and

(2) Separated from other connections in the circuit to prevent accidental contact and arcing.

(h) Uninsulated connections in each blasting circuit shall be kept out of water and shall not contact the coal, roof, ribs, or floor.

(i) When 20 or fewer boreholes are fired in a round, the blasting circuit shall be wired in a single series.

(j) Immediately prior to firing, all blasting circuits shall be tested for continuity and resistance using a blasting galvanometer or other instrument specifically designed for testing blasting circuits.

[53 FR 46786, Nov. 18, 1988; 54 FR 27641, June 30, 1989]

§ 75.1324 Methane concentration and tests.

(a) No shot shall be fired in an area that contains 1.0 volume percent or more of methane.

(b) Immediately before shots are fired, the methane concentration in a working place or any other area where blasting is to be performed, shall be determined by a person qualified to test for methane.

§ 75.1325 Firing procedures.

(a) Shots shall be fired by a qualified person or a person working in the presence of and under the direction of a qualified person.

(b) Only one face in a working place shall be blasted at a time, except that when blasting cut coal up to three faces may be blasted in a round if each face has a separate kerf and no more than a total of 20 shots connected in a single series are fired in the round. A permit to fire more than 20 boreholes in a round under the provisions of 30 CFR 75.1320 and 75.1321 may not be obtained for use when blasting multiple faces.

(c) Before blasting—

(1) All persons shall leave the blasting area and each immediately adjacent working place where a hazard would be created by the blast, to an area that is around at least one corner from the blasting area;

(2) The qualified person shall ascertain that all persons are a safe distance from the blasting area; and

(3) A warning shall be given and adequate time allowed for persons to respond.

(d) All shots shall be fired promptly, after all persons have been removed to a safe location.

[35 FR 17890, Nov. 20, 1970, as amended at 56 FR 51616, Oct. 11, 1991]

§ 75.1326 Examination after blasting.

(a) After blasting, the blasting area shall not be entered until it is clear of smoke and dust.

(b) Immediately after the blasting area has cleared, a qualified person or a person working in the presence of and under the direction of a qualified person, shall examine the area for misfires, methane and other hazardous conditions.

(c) If a round has partially detonated, the qualified person shall immediately leave the area and no person shall reenter the affected area for at least 5 minutes.

§ 75.1327 Misfires.

(a) When misfires occur, only work by a qualified person to dispose of misfires and other work necessary to protect persons shall be done in the affected area.

(b) When a misfire cannot be disposed of—

(1) A qualified person shall post each accessible entrance to the area affected by the hazard of the misfire with a warning at a conspicuous location to prohibit entry; and

(2) The misfire shall be immediately reported to mine management.

[53 FR 46786, Nov. 18, 1988; 54 FR 27641, June 30, 1989]

§ 75.1328 Damaged or deteriorated explosives and detonators.

(a) Damaged explosives or detonators shall be—

(1) Placed in separate containers constructed of nonconductive and nonsparking materials; and

(2) Removed from the mine or placed in a magazine and removed when the magazine is resupplied.

(b) Damaged detonators shall be shunted, if practicable, either before being removed from the mine or placed in a magazine.

(c) Deteriorated explosives and detonators shall be handled and disposed of in accordance with the instructions of the manufacturer.

Subpart O—Hoisting and Mantrips

§ 75.1400 Hoisting equipment; general.

(a) Every hoist used to transport persons shall be equipped with overspeed, overwind, and automatic stop controls.

(b) Every hoist handling a platform, cage, or other device used to transport persons shall be equipped with brakes capable of stopping the fully loaded platform, cage, or other device.

(c) Cages, platforms, or other devices used to transport persons in shafts and slopes shall be equipped with safety catches or other no less effective devices approved by the Secretary that act quickly and effectively in an emergency. Such catches or devices shall be tested at least once every two months.

(d) Hoisting equipment, including automatic elevators, used to transport persons shall be examined daily.

(e) Where persons are transported into or out of a mine by a hoist, a qualified hoisting engineer shall be on duty while any person is underground. No such engineer, however, shall be required for automatically operated cages, platforms, or elevators.

[48 FR 53239, Nov. 25, 1983]

§ 75.1400–1 Hoists; brakes, capability.

Brakes on hoists used to transport persons shall be capable of stopping and holding the fully loaded platform, cage, or other device at any point in the shaft, slope, or incline.

§ 75.1400–2 Hoists; tests of safety catches; records.

A record shall be made in a book of the tests, required by § 75.1400, of the safety catches or other devices approved by the Secretary. Each entry shall be signed by the person making the tests and countersigned by a responsible official.

§ 75.1400–3 Daily examination of hoisting equipment.

Hoists and elevators shall be examined daily and such examinations shall include, but not be limited to, the following:

(a) *Elevators.* A visual examination of the rope for wear, broken wires, and corrosion, especially at excessive strain points such as near the attachments and where the rope rests on sheaves;

(b) *Hoists and elevators.* (1) An examination of the rope fastenings for defects;

(2) An examination of safety catches;

(3) An examination of the cages, platforms, elevators, or other devices for loose, missing or defective parts;

(4) An examination of the head sheaves to check for broken flanges, defective bearings, rope alignment, and proper lubrication; and

(5) An observation of the lining and all other equipment and appurtenances installed in the shaft.

[48 FR 53239, Nov. 25, 1983]

§ 75.1400–4 Certifications and records of daily examinations.

At the completion of each daily examination required by § 75.1400, the person making the examination shall certify, by signature and date, that the examination has been made. If any unsafe condition is found during the examinations required by § 75.1400–3, the

person conducting the examination shall make a record of the condition and the date. Certifications and records shall be retained for one year.

[48 FR 53239, Nov. 25, 1983, as amended at 60 FR 33723, June 29, 1995]

§ 75.1401 Hoists; rated capacities; indicators.

Hoists shall have rated capacities consistent with the loads handled. An accurate and reliable indicator of the position of the cage, platform, skip, bucket, or cars shall be provided.

[48 FR 53239, Nov. 25, 1983]

§ 75.1401–1 Hoists; indicators.

The indicator required by § 75.1401 of this subpart shall be placed so that it is in clear view of the hoisting engineer and shall be checked daily to determine its accuracy.

[48 FR 53239, Nov. 25, 1983]

§ 75.1402 Communication between shaft stations and hoist room.

[STATUTORY PROVISIONS]

There shall be at least two effective methods approved by the Secretary of signaling between each of the shaft stations and the hoist room, one of which shall be a telephone or speaking tube.

§ 75.1402–1 Communication between shaft stations and hoist room.

One of the methods used to communicate between shaft stations and the hoist room shall give signals which can be heard by the hoisting engineer at all times while men are underground.

§ 75.1402–2 Tests of signaling systems.

Signaling systems used for communication between shaft stations and the hoist room shall be tested daily.

§ 75.1403 Other safeguards.

[STATUTORY PROVISIONS]

Other safeguards adequate, in the judgment of an authorized representative of the Secretary, to minimize hazards with respect to transportation of men and materials shall be provided.

§ 75.1403–1 General criteria.

(a) Sections 75.1403–2 through 75.1403–11 set out the criteria by which an authorized representative of the Secretary will be guided in requiring other safeguards on a mine-by-mine basis under § 75.1403. Other safeguards may be required.

(b) The authorized representative of the Secretary shall in writing advise the operator of a specific safeguard which is required pursuant to § 75.1403 and shall fix a time in which the operator shall provide and thereafter maintain such safeguard. If the safeguard is not provided within the time fixed and if it is not maintained thereafter, a notice shall be issued to the operator pursuant to section 104 of the Act.

(c) Nothing in the sections in the § 75.1403 series in this Subpart O precludes the issuance of a withdrawal order because of imminent danger.

§ 75.1403–2 Criteria—Hoists transporting materials; brakes.

Hoists and elevators used to transport materials should be equipped with brakes capable of stopping and holding the fully loaded platform, cage, skip, car, or other device at any point in the shaft, slope, or incline.

§ 75.1403–3 Criteria—Drum clutch; cage construction.

(a) The clutch of a free-drum on a personnel hoist should be provided with a locking mechanism or interlocked with the brake to prevent accidental withdrawal of the clutch.

(b) Cages used for hoisting persons should be constructed with the sides enclosed to a height of at least six feet and should have gates, safety chains, or bars across the ends of the cage when persons are being hoisted or lowered.

(c) Self-dumping cages, platforms, or other devices used for transportation of persons should have a locking device to prevent tilting when persons are transported.

(d) An attendant should be on duty at the surface when persons are being hoisted or lowered at the beginning and end of each shift.

(e) Precautions should be taken to protect persons working in shaft sumps.

(f) Workers should wear safety belts while doing work in or over shafts.

[48 FR 53239, Nov. 25, 1983]

§ 75.1403–4 Criteria—Automatic elevators.

(a) The doors of automatic elevators should be equipped with interlocking switches so arranged that the elevator car will be immovable while any door is opened or unlocked, and arranged so that such door or doors cannot be inadvertently opened when the elevator car is not at a landing.

(b) A ''Stop'' switch should be provided in the automatic elevator compartment that will permit the elevator to be stopped at any location in the shaft.

(c) A slack cable device should be used where appropriate on automatic elevators which will automatically shut-off the power and apply the brakes in the event the elevator is obstructed while descending.

(d) Each automatic elevator should be provided with a telephone or other effective communication system by which aid or assistance can be obtained promptly.

§ 75.1403–5 Criteria—Belt conveyors.

(a) Positive-acting stop controls should be installed along all belt conveyors used to transport men, and such controls should be readily accessible and maintained so that the belt can be stopped or started at any location.

(b) Belt conveyors used for regularly scheduled mantrips should be stopped while men are loading or unloading.

(c) All belt conveyors used for the transportation of persons should have a minimum vertical clearance of 18 inches from the nearest overhead projection when measured from the edge of the belt and there should be at least 36 inches of side clearance where men board or leave such belt conveyors.

(d) When men are being transported on regularly scheduled mantrips on belt conveyors the belt speed should not exceed 300 feet per minute when the vertical clearance is less than 24 inches, and should not exceed 350 feet per minute when the vertical clearance is 24 inches or more.

(e) Adequate illumination including colored lights or reflective signs should be installed at all loading and unloading stations. Such colored lights and reflective signs should be so located as to be observable to all persons riding the belt conveyor.

(f) After supplies have been transported on belt conveyors such belts should be examined for unsafe conditions prior to the transportation of men on regularly scheduled mantrips, and belt conveyors should be clear before men are transported.

(g) A clear travelway at least 24 inches wide should be provided on both sides of all belt conveyors installed after March 30, 1970. Where roof supports are installed within 24 inches of a belt conveyor, a clear travelway at least 24 inches wide should be provided on the side of such support farthest from the conveyor.

(h) On belt conveyors that do not transport men, stop and start controls should be installed at intervals not to exceed 1,000 feet. Such controls should be properly installed and positioned so as to be readily accessible.

(i) Telephone or other suitable communications should be provided at points where men or supplies are regularly loaded on or unloaded from the belt conveyors.

(j) Persons should not cross moving belt conveyors, except where suitable crossing facilities are provided.

§ 75.1403–6 Criteria—Self-propelled personnel carriers.

(a) Each self-propelled personnel carrier should:

(1) Be provided with an audible warning device;

(2) Be provided with a sealed-beam headlight, or its equivalent, on each end;

(3) Be provided with reflectors on both ends and sides.

(b) In addition, each track-mounted self-propelled personnel carrier should:

(1) Be provided with a suitable lifting jack and bar, which shall be secured or carried in a tool compartment;

(2) Be equipped with 2 separate and independent braking systems properly installed and well maintained;

(3) Be equipped with properly installed and well-maintained sanding devices, except that personnel carriers (jitneys), which transport not more

than 5 men, need not be equipped with such sanding device;

(4) If an open type, be equipped with guards of sufficient strength and height to prevent personnel from being thrown from such carriers.

§ 75.1403–7 Criteria—Mantrips.

(a) Mantrips should be operated independently of any loaded trip, empty trip, or supply trip and should not be operated within 300 feet of any trip, including another mantrip.

(b) A sufficient number of mantrip cars should be provided to prevent overcrowding of men.

(c) Mantrips should not be pushed.

(d) Where mantrips are operated by locomotives on slopes such mantrips should be coupled to the front and rear by locomotives capable of holding such mantrips. Where ropes are used on slopes for mantrip haulage, such conveyances should be connected by chains, steel ropes, or other effective devices between mantrip cars and the rope.

(e) Safety goggles or eyeshields should be provided for all persons being transported in open-type mantrips.

(f) All trips, including trailers and sleds, should be operated at speeds consistent with conditions and the equipment used, and should be so controlled that they can be stopped within the limits of visibility.

(g) All mantrips should be under the direction of a supervisor and the operator of each mantrip should be familiar with the haulage safety rules and regulations.

(h) Men should proceed in an orderly manner to and from mantrips and no person should be permitted to get on or off a moving mantrip.

(i) [Reserved]

(j) Mantrips should not be permitted to proceed until the operator of the mantrip is assured that he has a clear road.

(k) Supplies or tools, except small hand tools or instruments, should not be transported with men.

(l) At places where men enter or leave mantrip conveyances, ample clearance should be provided and provisions made to prevent persons from coming in contact with energized electric circuits.

(m) The mine car next to a trolley locomotive should not be used to transport men. Such cars may be used to transport small tools and supplies. This is not to be construed as permitting the transportation of large or bulky supplies such as shuttle car wheel units, or similar material.

(n) Drop-bottom cars used to transport men should have the bottoms secured with an additional locking device.

(o) Extraneous materials or supplies should not be transported on top of equipment; however, materials and supplies that are necessary for or related to the operation of such equipment may be transported on top of such equipment if a hazard is not introduced.

[35 FR 17890, Nov. 20, 1970, as amended at 53 FR 46786, Nov. 18, 1988]

§ 75.1403–8 Criteria—Track haulage roads.

(a) The speed at which haulage equipment is operated should be determined by the condition of the roadbed, rails, rail joints, switches, frogs, and other elements of the track and the type and condition of the haulage equipment.

(b) Track haulage roads should have a continuous clearance on one side of at least 24 inches from the farthest projection of normal traffic. Where it is necessary to change the side on which clearance is provided, 24 inches of clearance should be provided on both sides for a distance of not less than 100 feet and warning signs should be posted at such locations.

(c) Track haulage roads developed after March 30, 1970, should have clearance on the ''tight'' side of at least 12 inches from the farthest projection of normal traffic. A minimum clearance of 6 inches should be maintained on the ''tight'' side of all track haulage roads developed prior to March 30, 1970.

(d) The clearance space on all track haulage roads should be kept free of loose rock, supplies, and other loose materials.

(e) Positive stopblocks or derails should be installed on all tracks near the top and at landings of shafts, slopes, and surface inclines.

§ 75.1403–9 Criteria—Shelter holes.

(a) Shelter holes should be provided on track haulage roads at intervals of not more than 105 feet unless otherwise approved by the Coal Mine Safety District Manager(s).

(b) Shelter holes should be readily accessible and should be at least 5 feet in depth, not more than 4 feet in width (except crosscuts used as shelter holes) and at least the height of the coal seam where the coal seam is less than 6 feet high and at least 6 feet in height where the coal seam is 6 feet or more in height.

(c) Shelter holes should be kept free of refuse and other obstructions. Crosscuts used as shelter holes should be kept free of refuse or other materials to a depth of at least 15 feet.

(d) Shelter holes should be provided at all manually operated doors and at switch throws except: (1) At room switches, or (2) at switches where more than 6 feet of side clearance is provided. The Coal Mine Safety District Manager(s) may permit exemption of this requirement if such shelter holes create a hazardous roof condition.

(e) At each underground slope landing where men pass and cars are handled, a shelter hole at least 10 feet in depth, 4 feet in width, and 6 feet in height should be provided.

§ 75.1403–10 Criteria—Haulage; general.

(a) A permissible trip light or other approved device such as reflectors, approved by the Coal Mine Safety District Manager(s), should be used on the rear of trips pulled, on the front of trips pushed and on trips lowered in slopes. However, trip lights or other approved devices need not be used on cars being shifted to and from loading machines, on cars being handled at loading heads, during gathering operations at working faces, when trailing locomotives are used, or on trips pulled by animals.

(b) Cars on main haulage roads should not be pushed, except where necessary to push cars from side tracks located near the working section to the producing entries and rooms, where necessary to clear switches and sidetracks, and on the approach to cages, slopes, and surface inclines.

(c) Warning lights or reflective signs or tapes should be installed along haulage roads at locations of abrupt or sudden changes in the overhead clearance.

(d) No person, other than the motorman and brakeman, should ride on a locomotive unless authorized by the mine foreman, and then only when safe riding facilities are provided. No person should ride on any loaded car or on the bumper of any car. However, the brakeman may ride on the rear bumper of the last car of a slow moving trip pulled by a locomotive.

(e) Positive-acting stopblocks or derails should be used where necessary to protect persons from danger of runaway haulage equipment.

(f) An audible warning should be given by the operator of all self-propelled equipment including off-track equipment, where persons may be endangered by the movement of the equipment.

(g) Locomotives and personnel carriers should not approach to within 300 feet of preceding haulage equipment, except trailing locomotives that are an integral part of the trip.

(h) A total of at least 36 inches of unobstructed side clearance (both sides combined) should be provided for all rubber-tired haulage equipment where such equipment is used.

(i) Off-track haulage roadways should be maintained as free as practicable from bottom irregularities, debris, and wet or muddy conditions that affect the control of the equipment.

(j) Operators of self-propelled equipment should face in the direction of travel.

(k) Mechanical steering and control devices should be maintained so as to provide positive control at all times.

(l) All self-propelled rubber-tired haulage equipment should be equipped with well maintained brakes, lights, and a warning device.

(m) On and after March 30, 1971, all tram control switches on rubber-tired equipment should be designed to provide automatic return to the stop or off position when released.

§ 75.1403–11 Criteria—Entrances to shafts and slopes.

All open entrances to shafts should be equipped with safety gates at the

top and at each landing. Such gates should be self-closing and should be kept closed except when the cage is at such landing.

§ 75.1404 Automatic brakes; speed reduction gear.

[STATUTORY PROVISIONS]

Each locomotive and haulage car used in an underground coal mine shall be equipped with automatic brakes, where space permits. Where space does not permit automatic brakes, locomotives and haulage cars shall be subject to speed reduction gear, or other similar devices approved by the Secretary, which are designed to stop the locomotives and haulage cars with the proper margin of safety.

§ 75.1404–1 Braking system.

A locomotive equipped with a dual braking system will be deemed to satisfy the requirements of § 75.1404 for a train comprised of such locomotive and haulage cars, provided the locomotive is operated within the limits of its design capabilities and at speeds consistent with the condition of the haulage road. A trailing locomotive or equivalent devices should be used on trains that are operated on ascending grades.

§ 75.1405 Automatic couplers.

[STATUTORY PROVISIONS]

All haulage equipment acquired by an operator of a coal mine on or after March 30, 1971, shall be equipped with automatic couplers which couple by impact and uncouple without the necessity of persons going between the ends of such equipment. All haulage equipment without automatic couplers in use in a mine on March 30, 1970, shall also be so equipped within 4 years after March 30, 1970.

§ 75.1405–1 Automatic couplers, haulage equipment.

The requirement of § 75.1405 with respect to automatic couplers applies only to track haulage cars which are regularly coupled and uncoupled.

WIRE ROPES

SOURCE: Sections 75.1429 through 75.1438 appear at 48 FR 53239, Nov. 25, 1983, unless otherwise noted.

§ 75.1429 Guide ropes.

If guide ropes are used in shafts for personnel hoisting applications other than shaft development, the nominal strength (manufacturer's published catalog strength) of the guide rope at installation shall meet the minimum value calculated as follows: Minimum value=Static Load×5.0.

§ 75.1430 Wire ropes; scope.

(a) Sections 75.1430 through 75.1438 apply to wire ropes in service used to hoist—

(1) Persons in shafts or slopes underground; or

(2) Loads in shaft or slope development when persons work below the suspended loads.

(b) These standards do not apply to wire ropes used for elevators.

§ 75.1431 Minimum rope strength.

At installation, the nominal strength (manufacturer's published catalog strength) of wire ropes used for hoisting shall meet the minimum rope strength values obtained by the following formulas in which ''L'' equals the maximum suspended rope length in feet:

(a) *Winding drum ropes* (all constructions, including rotation resistant).

For rope lengths less than 3,000 feet:
Minimum Value=Static Load×(7.0 − 0.001L)
For rope lengths 3,000 feet or greater:
Minimum Value=Static Load×4.0

(b) *Friction drum ropes*.

For rope lengths less than 4,000 feet:
Minimum Value=Static Load×(7.0 − 0.0005L)
For rope lengths 4,000 feet or greater:
Minimum Value=Static Load×5.0

(c) *Tail ropes* (balance ropes).

Minimum Value=Weight of Rope×7.0

[48 FR 53239, Nov. 25, 1983; 48 FR 54975, Dec. 8, 1983]

§ 75.1432 Initial measurement.

After initial rope stretch but before visible wear occurs, the rope diameter of newly installed wire ropes shall be

measured at least once in every third interval of active length and the measurements averaged to establish a baseline for subsequent measurements. A record of the measurements and the date shall be made by the person taking the measurements. This record shall be retained until the rope is retired from service.

[48 FR 53239, Nov. 25, 1983, as amended at 60 FR 33723, June 29, 1995]

§ 75.1433 Examinations.

(a) At least once every fourteen calendar days, each wire rope in service shall be visually examined along its entire active length for visible structural damage, corrosion, and improper lubrication or dressing. In addition, visual examination for wear and broken wires shall be made at stress points, including the area near attachments, where the rope rests on sheaves, where the rope leaves the drum, at drum crossovers, and at change-of-layer regions. When any visible condition that results in a reduction of rope strength is present, the affected portion of the rope shall be examined on a daily basis.

(b) Before any person is hoisted with a newly installed wire rope or any wire rope that has not been examined in the previous fourteen calendar days, the wire rope shall be examined in accordance with paragraph (a) of this section.

(c) At least once every six months, nondestructive tests shall be conducted of the active length of the rope, or rope diameter measurements shall be made—

(1) Wherever wear is evident;

(2) Where the hoist rope rests on sheaves at regular stopping points;

(3) Where the hoist rope leaves the drum at regular stopping points; and

(4) At drum crossover and change-of-layer regions.

(d) At the completion of each examination required by paragraph (a) of this section, the person making the examination shall certify, by signature and date, that the examination has been made. If any condition listed in paragraph (a) of this standard is present, the person conducting the examination shall make a record of the condition and the date. Certifications and records of examinations shall be retained for one year.

(e) The person making the measurements or nondestructive tests as required by paragraph (c) of this section shall record the measurements or test results and the date. This record shall be retained until the rope is retired from service.

[48 FR 53239, Nov. 25, 1983, as amended at 60 FR 33723, June 29, 1995]

§ 75.1434 Retirement criteria.

Unless damage or deterioration is removed by cutoff, wire ropes shall be removed from service when any of the following conditions occurs:

(a) The number of broken wires within a rope lay length, excluding filler wires, exceeds either—

(1) Five percent of the total number of wires; or

(2) Fifteen percent of the total number of wires within any strand;

(b) On a regular lay rope, more than one broken wire in the valley between strands in one rope lay length;

(c) A loss of more than one-third of the original diameter of the outer wires;

(d) Rope deterioriation from corrosion;

(e) Distortion of the rope structure;

(f) Heat damage from any source;

(g) Diameter reduction due to wear that exceeds six percent of the baseline diameter measurement; or

(h) Loss of more than ten percent of rope strength as determined by nondestructive testing.

§ 75.1435 Load end attachments.

(a) Wire rope shall be attached to the load by a method that develops at least 80 percent of the nominal strength of the rope.

(b) Except for terminations where use of other materials is a design feature, zinc (spelter) shall be used for socketing wire ropes. Design feature means either the manufacturer's original design or a design approved by a registered professional engineer.

(c) Load end attachment methods using splices are prohibited.

§ 75.1436 Drum end attachment.

(a) For drum end attachment, wire rope shall be attached—

(1) Securely by clips after making one full turn around the drum spoke;

(2) Securely by clips after making one full turn around the shaft, if the drum is fixed to the shaft; or

(3) By properly assembled anchor bolts, clamps, or wedges, provided that the attachment is a design feature of the hoist drum. Design feature means either the manufacturer's original design or a design approved by a registered professional engineer.

(b) A minimum of three full turns of wire rope shall be on the drum when the rope is extended to its maximum working length.

§ 75.1437 End attachment retermination.

Damaged or deteriorated wire rope shall be removed by cutoff and the rope reterminated where there is—

(a) More than one broken wire at an attachment;

(b) Improper installation of an attachment;

(c) Slippage at an attachment; or

(d) Evidence of deterioration from corrosion at an attachment.

§ 75.1438 End attachment replacement.

Wire rope attachments shall be replaced when cracked, deformed, or excessively worn.

Subpart P—Mine Emergencies

§ 75.1500 [Reserved]

§ 75.1501 Emergency evacuations.

(a) For each shift that miners work underground, there shall be in attendance a responsible person designated by the mine operator to take charge during mine emergencies involving a fire, explosion, or gas or water inundation.

(1) The responsible person shall have current knowledge of the assigned location and expected movements of miners underground, the operation of the mine ventilation system, the locations of the mine escapeways and refuge alternatives, the mine communications system, any mine monitoring system if used, locations of firefighting equipment, the mine's Emergency Response Plan, the Mine Rescue Notification Plan, and the Mine Emergency Evacuation and Firefighting Program of Instruction.

(2) The responsible person shall be trained annually in a course of instruction in mine emergency response, as prescribed by MSHA's Office of Educational Policy and Development. The course will include topics such as the following:

(i) Organizing a command center;

(ii) Coordinating firefighting personnel;

(iii) Deploying firefighting equipment;

(iv) Coordinating mine rescue personnel;

(v) Establishing fresh air base;

(vi) Deploying mine rescue teams;

(vii) Providing for mine gas sampling and analysis;

(viii) Establishing security;

(ix) Initiating an emergency mine evacuation;

(x) Contacting emergency personnel; and

(xi) Communicating appropriate information related to the emergency.

(3) The operator shall certify by signature and date after each responsible person has completed the training and keep the certification at the mine for 1 year.

(b) The responsible person shall initiate and conduct an immediate mine evacuation when there is a mine emergency which presents an imminent danger to miners due to fire or explosion or gas or water inundation. Only properly trained and equipped persons essential to respond to the mine emergency may remain underground.

(c) The mine operator shall instruct all miners of the identity of the responsible person designated by the operator for their workshift. The mine operator shall instruct miners of any change in the identity of the responsible person before the start of their workshift.

(d) Nothing in this section shall be construed to restrict the ability of other persons in the mine to warn of an imminent danger which warrants evacuation.

[68 FR 53049, Sept. 9, 2003, as amended at 73 FR 7655, Feb. 8, 2008; 73 FR 80697, Dec. 31, 2008]

§ 75.1502 Mine emergency evacuation and firefighting program of instruction.

Each operator of an underground coal mine shall adopt and follow a mine emergency evacuation and firefighting program that instructs all miners in the proper procedures they must follow if a mine emergency occurs.

(a) *Program approval.* The operator shall submit this program of instruction, and any revisions, for approval to the District Manager of the Coal Mine Safety and Health district in which the mine is located. Within 30 days of approval, the operator shall conduct training in accordance with the revised program.

(b) *New or revised provisions.* Before implementing any new or revised approved provision in the program of instruction, the operator shall instruct miners in the change.

(c) *Instruction plan.* The approved program shall include a specific plan designed to instruct miners on all shifts on the following:

(1) Procedures for—

(i) Evacuating the mine for mine emergencies that present an imminent danger to miners due to fire, explosion, or gas or water inundation;

(ii) Evacuating all miners not required for a mine emergency response; and

(iii) The rapid assembly and transportation of necessary miners, fire suppression equipment, and rescue apparatus to the scene of the mine emergency.

(2) The use, care, and maintenance of self-rescue devices, including hands-on training in the complete donning and transferring of all types of self-rescue devices used at the mine.

(3) The deployment, use, and maintenance of refuge alternatives.

(4) Scenarios requiring a discussion of options and a decision as to the best option for evacuation under each of the various mine emergencies (fires, explosions, or gas or water inundations). These options shall include:

(i) Encountering conditions in the mine or circumstances that require immediate donning of self-rescue devices.

(ii) Using continuous directional lifelines or equivalent devices, tethers, and doors;

(iii) Traversing undercasts or overcasts;

(iv) Switching escapeways, as applicable;

(v) Negotiating any other unique escapeway conditions; and

(vi) Using refuge alternatives.

(5) Location and use of the fire suppression and firefighting equipment and materials available in the mine.

(6) Location of the escapeways, exits, routes of travel to the surface, including the location of continuous directional lifelines or equivalent devices.

(7) Location, quantity, types, and use of stored SCSRs, as applicable.

(8) A review of the mine map; the escapeway system; the escape, firefighting, and emergency evacuation plan in effect at the mine; and the locations of refuge alternatives and abandoned areas.

(9) A description of how miners will receive annual expectations training that includes practical experience in donning and transferring SCSRs in smoke, simulated smoke, or an equivalent environment and breathing through a realistic SCSR training unit or device that provides the sensation of SCSR airflow resistance and heat.

(10) A summary of the procedures related to deploying refuge alternatives.

(11) A summary of the construction methods for 15 psi stoppings constructed prior to an event.

(12) A summary of the procedures related to refuge alternative use.

(d) *Instructors.* (1) The mine operator shall designate a person who has the ability, training, knowledge, or experience to conduct the mine emergency evacuation instruction and drills in his or her area of expertise.

(2) Persons conducting SCSR donning and transferring training shall be able to effectively train and evaluate whether miners can successfully don the SCSR and transfer to additional SCSR devices.

[71 FR 71452, Dec. 8, 2006, as amended at 73 FR 80697, Dec. 31, 2008]

§ 75.1503 Use of fire suppression equipment.

In addition to the approved program of instruction required by 30 CFR

75.1502, each operator of an underground coal mine shall ensure the following.

(a) *Working section*. At least two miners in each working section on each production shift shall be proficient in the use of all fire suppression equipment available on such working section, and know the location of such fire suppression equipment.

(b) *Attended equipment*. Each operator of attended equipment specified in 30 CFR 75.1107–1(c)(1), and each miner assigned to perform job duties at the job site in the direct line of sight of attended equipment as described in 30 CFR 75.1107–1(c)(2), shall be proficient in the use of fire suppression devices installed on such attended equipment.

(c) *Maintenance shift*. The shift foreman and at least one miner for every five miners working underground on a maintenance shift shall be proficient in the use of fire suppression equipment available in the mine, and know the location of such fire suppression equipment.

[71 FR 71452, Dec. 8, 2006]

§ 75.1504 Mine emergency evacuation training and drills.

Each operator of an underground coal mine shall conduct mine emergency evacuation training and drills and require all miners to participate.

(a) *Schedule of training and drills*. Each miner shall participate in a mine emergency evacuation training and drill once each quarter. Quarters shall be based on a calendar year (Jan–Mar, Apr–Jun, Jul–Sep, Oct–Dec). In addition—

(1) A newly hired miner, who has not participated in a mine emergency evacuation training and drill at the mine within the previous 3 months, shall participate in the next applicable mine emergency evacuation training and drill.

(2) Prior to assuming duties on a section or outby work location, a foreman shall travel both escapeways in their entirety.

(b) *Content of quarterly training and drill*. Each quarterly evacuation training and drill shall include the following:

(1) Hands-on training on all types of self-rescue devices used at the mine, which includes—

(i) Instruction and demonstration in the use, care, and maintenance of self-rescue devices;

(ii) The complete donning of the SCSR by assuming a donning position, opening the device, activating the device, inserting the mouthpiece, and putting on the nose clip; and

(iii) Transferring between all applicable self-rescue devices.

(2) Training that emphasizes the importance of—

(i) Recognizing when the SCSR is not functioning properly and demonstrating how to initiate and reinitiate the starting sequence;

(ii) Not removing the mouthpiece, even to communicate, until the miner reaches fresh air; and

(iii) Proper use of the SCSR by controlling breathing and physical exertion.

(3) A realistic escapeway drill that is initiated and conducted with a different approved scenario each quarter and during which each miner—

(i) Travels the primary or alternate escapeway in its entirety, alternating escapeways each quarter;

(ii) Physically locates and practices using the continuous directional lifelines or equivalent devices and tethers, and physically locates the stored SCSRs and refuge alternatives;

(iii) Traverses undercasts or overcasts and doors;

(iv) Switches escapeways, as applicable; and

(v) Negotiates any other unique escapeway conditions.

(4) A review of the mine and escapeway maps, the firefighting plan, and the mine emergency evacuation plan in effect at the mine, which shall include:

(i) Informing miners of the locations of fire doors, check curtains, changes in the routes of travel, and plans for diverting smoke from escapeways.

(ii) Locating escapeways, exits, routes of travel to the surface, abandoned areas, and refuge alternatives.

(5) Operation of the fire suppression equipment available in the mine and the location and use of firefighting equipment and materials.

(6) Reviewing the procedures for deploying refuge alternatives and components.

(7) For miners who will be constructing the 15 psi stoppings prior to an event, reviewing the procedures for constructing them.

(8) Reviewing the procedures for use of the refuge alternatives and components.

(9) Task training in proper transportation of the refuge alternatives and components.

(c) *Annual expectations training.* Over the course of each year, each miner shall participate in expectations training that includes the following:

(1) Donning and transferring SCSRs in smoke, simulated smoke, or an equivalent environment.

(2) Breathing through a realistic SCSR training unit that provides the sensation of SCSR airflow resistance and heat.

(3) Deployment and use of refuge alternatives similar to those in use at the mine, including—

(i) Deployment and operation of component systems; and

(ii) Instruction on when to use refuge alternatives during a mine emergency, emphasizing that it is the last resort when escape is impossible.

(4) A miner shall participate in expectations training within one quarter of being employed at the mine.

(d) *Certification of training and drills.* At the completion of each training or drill required in this section, the operator shall certify by signature and date that the training or drill was held in accordance with the requirements of this section.

(1) This certification shall include the names of the miners participating in the training or drill. For each miner, this certification shall list the content of the training or drill component completed, including the escapeway traveled and scenario used, as required in paragraphs (b) and (c) of this section.

(2) Certifications shall be kept at the mine for one year.

(3) Upon request, the certifications shall be made available to an authorized representative of the Secretary and the representative of the miners.

(4) Upon request, a copy of the certification that shows his or her own training shall be provided to the participating miner.

[71 FR 71452, Dec. 8, 2006, as amended at 73 FR 80698, Dec. 31, 2008]

§ 75.1505 Escapeway maps.

(a) *Content and accessibility.* An escapeway map shall show the designated escapeways from the working sections or the miners' work stations to the surface or the exits at the bottom of the shaft or slope, refuge alternatives, and SCSR storage locations. The escapeway map shall be posted or readily accessible for all miners—

(1) In each working section;

(2) In each area where mechanized mining equipment is being installed or removed;

(3) At the refuge alternative; and

(4) At a surface location of the mine where miners congregate, such as at the mine bulletin board, bathhouse, or waiting room.

(b) *Keeping maps current.* All maps shall be kept up-to-date and any change in route of travel, location of doors, location of refuge alternatives, or direction of airflow shall be shown on the maps by the end of the shift on which the change is made.

(c) *Informing affected miners.* Miners underground on a shift when any such change is made shall be notified immediately of the change and other affected miners shall be informed of the change before entering the underground areas of the mine.

[71 FR 71452, Dec. 8, 2006, as amended at 73 FR 80698, Dec. 31, 2008]

§ 75.1506 Refuge alternatives.

(a) Each operator shall provide refuge alternatives and components as follows:

(1) Prefabricated self-contained units, including the structural, breathable air, air monitoring, and harmful gas removal components of the unit, shall be approved under 30 CFR part 7; and

(2) The structural components of units consisting of 15 psi stoppings constructed prior to an event shall be approved by the District Manager, and the breathable air, air monitoring, and harmful gas removal components of

these units shall be approved under 30 CFR part 7.

(3) Prefabricated refuge alternative structures that states have approved and those that MSHA has accepted in approved Emergency Response Plans (ERPs) that are in service prior to March 2, 2009 are permitted until December 31, 2018, or until replaced, whichever comes first. Breathable air, air-monitoring, and harmful gas removal components of either a prefabricated self-contained unit or a unit consisting of 15 psi stoppings constructed prior to an event in a secure space and an isolated atmosphere that states have approved and those that MSHA has accepted in approved ERPs that are in use prior to March 2, 2009 are permitted until December 31, 2013, or until replaced, whichever comes first. Refuge alternatives consisting of materials pre-positioned for miners to deploy in a secure space with an isolated atmosphere that MSHA has accepted in approved ERPs that are in use prior to March 2, 2009 are permitted until December 31, 2010, or until replaced, whichever comes first.

(b) Except as permitted under paragraph (a)(3) of this section, each operator shall provide refuge alternatives with sufficient capacity to accommodate all persons working underground.

(1) Refuge alternatives shall provide at least 15 square feet of floor space per person and 30 to 60 cubic feet of volume per person according to the following chart. The airlock can be included in the space and volume if waste is disposed outside the refuge alternative.

Mining height (inches)	Unrestricted volume (cubic feet) per person*
36 or less	30
>36–≤42	37.5
>42–≤48	45
>48–≤54	52.5
>54	60

* Includes an adjustment of 12 inches for clearances.

(2) Refuge alternatives for working sections shall accommodate the maximum number of persons that can be expected on or near the section at any time.

(3) Each refuge alternative for outby areas shall accommodate persons reasonably expected to use it.

(c) Refuge alternatives shall be provided at the following locations:

(1) Within 1,000 feet from the nearest working face and from locations where mechanized mining equipment is being installed or removed except that for underground anthracite coal mines that have no electrical face equipment, refuge alternatives shall be provided if the nearest working face is greater than 2,000 feet from the surface.

(2) Spaced within one-hour travel distances in outby areas where persons work such that persons in outby areas are never more than a 30-minute travel distance from a refuge alternative or safe exit. However, the operator may request and the District Manager may approve a different location in the ERP. The operator's request shall be based on an assessment of the risk to persons in outby areas, considering the following factors: proximity to seals; proximity to potential fire or ignition sources; conditions in the outby areas; location of stored SCSRs; and proximity to the most direct, safe, and practical route to an intake escapeway.

(d) Roof and rib support for refuge alternative locations shall be specified in the mine's roof control plan.

(e) The operator shall protect the refuge alternative and contents from damage during transportation, installation, and storage.

(f) A refuge alternative shall be removed from service if examination reveals damage that interferes with the functioning of the refuge alternative or any component.

(1) If a refuge alternative is removed from service, the operator shall withdraw all persons from the area serviced by the refuge alternative, except those persons referred to in §104(c) of the Mine Act.

(2) Refuge alternative components removed from service shall be replaced or be repaired for return to service in accordance with the manufacturer's specifications.

(g) At all times, the site and area around the refuge alternative shall be kept clear of machinery, materials, and obstructions that could interfere with the deployment or use of the refuge alternative.

(h) Each refuge alternative shall be conspicuously identified with a sign or marker as follows:

(1) A sign or marker made of a reflective material with the word ''REFUGE'' shall be posted conspicuously at each refuge alternative.

(2) Directional signs made of a reflective material shall be posted leading to each refuge alternative location.

(i) During use of the refuge alternative, the atmosphere within the refuge alternative shall be monitored. Changes or adjustments shall be made to reduce the concentration of methane to less than 1 percent; to reduce the concentration of carbon dioxide to 1 percent or less and excursions not exceeding 2.5 percent; and to reduce the concentration of carbon monoxide to 25 ppm or less. Oxygen shall be maintained at 18.5 to 23 percent.

(j) Refuge alternatives shall contain a fire extinguisher that—

(1) Meets the requirements for portable fire extinguishers used in underground coal mines under this part;

(2) Is appropriate for extinguishing fires involving the chemicals used for harmful gas removal; and

(3) Uses a low-toxicity extinguishing agent that does not produce a hazardous by-product when activated.

[73 FR 80698, Dec. 31, 2008]

§ 75.1507 Emergency Response Plan; refuge alternatives.

(a) The Emergency Response Plan (ERP) shall include the following for each refuge alternative and component:

(1) The types of refuge alternatives used in the mine, *i.e.*, a prefabricated self-contained unit or a unit consisting of 15 psi stoppings constructed prior to an event in a secure space and an isolated atmosphere.

(2) Procedures or methods for maintaining approved refuge alternatives and components.

(3) The rated capacity of each refuge alternative, the number of persons expected to use each refuge alternative, and the duration of breathable air provided per person by the approved breathable air component of each refuge alternative.

(4) The methods for providing breathable air with sufficient detail of the component's capability to provide breathable air over the duration stated in the approval.

(5) The methods for providing ready backup oxygen controls and regulators.

(6) The methods for providing an airlock and for providing breathable air in the airlock, except where adequate positive pressure is maintained.

(7) The methods for providing sanitation facilities.

(8) The methods for harmful gas removal, if necessary.

(9) The methods for monitoring gas concentrations, including charging and calibration of equipment.

(10) The method for providing lighting sufficient for persons to perform tasks.

(11) Suitable locations for the refuge alternatives and an affirmative statement that the locations are—

(i) Not within direct line of sight of the working face; and

(ii) Where feasible, not placed in areas directly across from, nor closer than 500 feet radially from, belt drives, take-ups, transfer points, air compressors, explosive magazines, seals, entrances to abandoned areas, and fuel, oil, or other flammable or combustible material storage. However, the operator may request and the District Manager may approve an alternative location in the ERP if mining involves two-entry systems or yield pillars in a longwall that would prohibit locating the refuge alternative out of direct line of sight of the working face.

(12) The maximum mine air temperature at each of the locations where refuge alternatives are to be placed.

(b) For a refuge alternative consisting of 15 psi stoppings constructed prior to an event in a secure space and an isolated atmosphere, the ERP shall specify that—

(1) The breathable air components shall be approved by MSHA; and

(2) The refuge alternative can withstand exposure to a flash fire of 300 degrees Fahrenheit (°F) for 3 seconds and a pressure wave of 15 pounds per square inch (psi) overpressure for 0.2 seconds.

(c) If the refuge alternative sustains persons for only 48 hours, the ERP shall detail advanced arrangements that have been made to assure that persons who cannot be rescued within

48 hours will receive additional supplies to sustain them until rescue. Advance arrangements shall include the following:

(1) Pre-surveyed areas for refuge alternatives with closure errors of less than 20,000:1.

(2) An analysis to demonstrate that the surface terrain, the strata, the capabilities of the drill rig, and all other factors that could affect drilling are such that a hole sufficient to provide required supplies and materials reliably can be promptly drilled within 48 hours of an accident at a mine.

(3) Permissions to cross properties, build roads, and construct drill sites.

(4) Arrangement with a drilling contractor or other supplier of drilling services to provide a suitable drilling rig, personnel and support so that a hole can be completed to the refuge alternative within 48 hours.

(5) Capability to promptly transport a drill rig to a pre-surveyed location such that a drilled hole would be completed and located near a refuge alternative structure within 48 hours of an accident at a mine.

(6) The specifications of pipes, air lines, and approved fans or approved compressors that will be used.

(7) A method for assuring that within 48 hours, breathable air shall be provided.

(8) A method for assuring the immediate availability of a backup source for supplying breathable air and a backup power source for surface installations.

(d) The ERP shall specify that the refuge alternative is stocked with the following:

(1) A minimum of 2,000 calories of food and 2.25 quarts of potable water per person per day in approved containers sufficient to sustain the maximum number of persons reasonably expected to use the refuge alternative for at least 96 hours, or for 48 hours if advance arrangements are made under paragraph (c) of this section;

(2) A manual that contains sufficient detail for each refuge alternative or component addressing in-mine transportation, operation, and maintenance of the unit;

(3) Sufficient quantities of materials and tools to repair components; and

(4) First aid supplies.

[73 FR 80699, Dec. 31, 2008]

§ 75.1508 Training and records for examination, maintenance and repair of refuge alternatives and components.

(a) Persons examining, maintaining, or repairing refuge alternatives and components shall be instructed in how to perform this work.

(1) The operator shall assure that all persons assigned to examine, maintain, and repair refuge alternatives and components are trained.

(2) The mine operator shall certify, by signature and date, the training of persons who examine, maintain, and repair refuge alternatives and components.

(b) At the completion of each repair, the person conducting the maintenance or repair shall make a record of all corrective action taken.

(c) Training certifications and repair records shall be kept at the mine for one year.

[73 FR 80699, Dec. 31, 2008]

Subpart Q—Communications

§ 75.1600 Communications.

[STATUTORY PROVISIONS]

Telephone service or equivalent two-way communication facilities, approved by the Secretary or his authorized representative, shall be provided between the surface and each landing of main shafts and slopes and between the surface and each working section of any coal mine that is more than 100 feet from a portal.

§ 75.1600–1 Communication facilities; main portals; installation requirements.

A telephone or equivalent two-way communication facility shall be located on the surface within 500 feet of all main portals, and shall be installed either in a building or in a box-like structure designed to protect the facilities from damage by inclement weather. At least one of these communication facilities shall be at a location

where a responsible person who is always on duty when men are underground can hear the facility and respond immediately in the event of an emergency.

[38 FR 29999, Oct. 31, 1973]

§ 75.1600–2 Communication facilities; working sections; installation and maintenance requirements; audible or visual alarms.

(a) Telephones or equivalent two-way communication facilities provided at each working section shall be located not more than 500 feet outby the last open crosscut and not more than 800 feet from the farthest point of penetration of the working places on such section.

(b) The incoming communication signal shall activate an audible alarm, distinguishable from the surrounding noise level, or a visual alarm that can be seen by a miner regularly employed on the working section.

(c) If a communication system other than telephones is used and its operation depends entirely upon power from the mine electric system, means shall be provided to permit continued communication in the event the mine electric power fails or is cut off; provided, however, that where trolley phones and telephones are both used, an alternate source of power for the trolley phone system is not required.

(d) Trolley phones connected to the trolley wire shall be grounded in accordance with Subpart H of this part.

(e) Telephones or equivalent two-way communication facilities shall be maintained in good operating condition at all times. In the event of any failure in the system that results in loss of communication, repairs shall be started immediately, and the system restored to operating condition as soon as possible.

[38 FR 29999, Oct. 31, 1973]

§ 75.1600–3 Communications facilities; refuge alternatives.

(a) Refuge alternatives shall be provided with a communications system that consists of—

(1) A two-way communication facility that is a part of the mine communication system, which can be used from inside the refuge alternative; and

(2) An additional communication system and other requirements as defined in the communications portion of the operator's approved Emergency Response Plan.

[73 FR 80700, Dec. 31, 2008]

Subpart R—Miscellaneous

§ 75.1700 Oil and gas wells.

[STATUTORY PROVISIONS]

Each operator of a coal mine shall take reasonable measures to locate oil and gas wells penetrating coalbeds or any underground area of a coal mine. When located, such operator shall establish and maintain barriers around such oil and gas wells in accordance with State laws and regulations, except that such barriers shall not be less than 300 feet in diameter, unless the Secretary or his authorized representative permits a lesser barrier consistent with the applicable State laws and regulations where such lesser barrier will be adequate to protect against hazards from such wells to the miners in such mine, or unless the Secretary or his authorized representative requires a greater barrier where the depth of the mine, other geologic conditions, or other factors warrant such a greater barrier.

§ 75.1702 Smoking; prohibition.

[STATUTORY PROVISIONS]

No person shall smoke, carry smoking materials, matches, or lighters underground, or smoke in or around oil houses, explosives magazines, or other surface areas where such practice may cause a fire or explosion. The operator shall institute a program, approved by the Secretary, to insure that any person entering the underground area of the mine does not carry smoking materials, matches, or lighters.

[35 FR 17890, Nov. 20, 1970, as amended at 60 FR 33723, June 29, 1995]

§ 75.1702–1 Smoking programs.

Programs required under § 75.1702 shall be submitted to the Coal Mine Safety District Manager for approval on or before May 30, 1970.

§ 75.1703 Portable electric lamps.

[STATUTORY PROVISIONS]

Persons underground shall use only permissible electric lamps approved by the Secretary for portable illumination. No open flame shall be permitted in the underground area of any coal mine, except as permitted under § 75.1106.

§ 75.1703–1 Permissible lamps.

Lamps approved by the Bureau of Mines or the Mine Safety and Health Administration under Part 19 or Part 20 of this chapter (Bureau of Mines Schedule 6D and Schedule 10C) are approved lamps for the purposes of § 75.1703.

§ 75.1707–1 New working section.

The term ''new working section'' as used in § 75.1707 means any extension of the belt or trolley haulage system in main, cross, and room entries necessary for the development of the mine on and after March 30, 1970. Room entries being developed as of March 30, 1970, with certified stop line limitations as shown on the mine map and retreating panels shall not be considered as new working sections.

§ 75.1708 Surface structures, fireproofing.

[STATUTORY PROVISIONS]

After March 30, 1970, all structures erected on the surface within 100 feet of any mine opening shall be of fireproof construction. Unless structures existing on or prior to such date which are located within 100 feet of any mine opening are of such construction, fire doors shall be erected at effective points in mine openings to prevent smoke or fire from outside sources endangering miners underground. These doors shall be tested at least monthly to insure effective operation. A record of such tests shall be kept in an area on the surface of the mine chosen by the operator to minimize the danger of destruction by fire or other hazard and shall be available for inspection by interested persons.

§ 75.1708–1 Surface structures; fireproof construction.

Structures of fireproof construction is interpreted to mean structures with fireproof exterior surfaces.

§ 75.1709 Accumulations of methane and coal dust on surface coal-handling facilities.

[STATUTORY PROVISIONS]

Adequate measures shall be taken to prevent methane and coal dust from accumulating in excessive concentrations in or on surface coal-handling facilities, but in no event shall methane be permitted to accumulate in concentrations in or on surface coal-handling facilities in excess of limits established for methane by the Secretary on and after March 30, 1971. Where coal is dumped at or near air-intake openings, provisions shall be made to avoid dust from entering the mine.

§ 75.1710 Canopies or cabs; diesel-powered and electric face equipment.

In any coal mine where the height of the coalbed permits, an authorized representative of the Secretary may require that diesel-powered and electric face equipment, including shuttle cars, be provided with substantially constructed canopies or cabs to protect the miners operating such equipment from roof falls and from rib and face rolls.

[61 FR 55527, Oct. 25, 1996]

§ 75.1710–1 Canopies or cabs; self-propelled diesel-powered and electric face equipment; installation requirements.

(a) Except as provided in paragraph (f) of this section, all self-propelled diesel-powered and electric face equipment, including shuttle cars, which is employed in the active workings of each underground coal mine on and after January 1, 1973, shall, in accordance with the schedule of time specified in paragraphs (a) (1), (2), (3), (4), (5), and (6) of this section, be equipped with substantially constructed canopies or cabs, located and installed in such a manner that when the operator is at the operating controls of such equipment he shall be protected from falls of roof, face, or rib, or from rib

and face rolls. The requirements of this paragraph (a) shall be met as follows:

(1) On and after January 1, 1974, in coal mines having mining heights of 72 inches or more;

(2) On and after July 1, 1974, in coal mines having mining heights of 60 inches or more, but less than 72 inches;

(3) On and after January 1, 1975, in coal mines having mining heights of 48 inches or more, but less than 60 inches;

(4) On and after July 1, 1975, in coal mines having mining heights of 36 inches or more, but less than 48 inches;

(5)(i) On and after January 1, 1976, in coal mines having mining heights of 30 inches or more, but less than 36 inches,

(ii) On and after July 1, 1977, in coal mines having mining heights of 24 inches or more, but less than 30 inches, and

(6) On and after July 1, 1978, in coal mines having mining heights of less than 24 inches.

(b)(1) For purposes of this section, a canopy means a structure which provides overhead protection against falls of roof.

(2) For purposes of this section, a cab means a structure which provides overhead and lateral protection against falls of roof, rib, and face, or rib and face rolls.

(c) In determining whether to install substantially constructed canopies as opposed to substantially constructed cabs, the operator shall consider and take into account the following factors:

(1) The mining method used;

(2) Physical limitations, including but not limited to the dip of the coalbed, and roof, rib, and face conditions;

(3) Previous accident experience, if any, caused by falls of roof, rib, and face, or rib and face rolls;

(4) Overhead protection, such as that afforded by a substantially constructed canopy, against falls of roof will always be required; and

(5) Lateral protection, such as that afforded by a substantially constructed cab, may also be necessary where the occurrence of falls of rib and face, or rib and face rolls is likely.

(d) For purposes of this section, a canopy or cab will be considered to be substantially constructed if a registered engineer certifies that such canopy or cab has the minimum structural capacity to support elastically: (1) A dead weight load of 18,000 pounds, or (2) 15 p.s.i. distributed uniformly over the plan view area of the structure, whichever is lesser.

(e) Evidence of the certification required by paragraph (d) of this section shall be furnished by attaching a plate, label, or other appropriate marking to the canopy or cab for which certification has been made, stating that such canopy or cab meets the minimum requirements for structural capacity set forth in paragraph (d) of this section. Written evidence of such certification shall also be retained by the operator, and shall be made available to an authorized representative of the Secretary upon request. Written evidence of certification may consist of the report of the registered engineer who certified the canopy or cab, or of information from the manufacturer of the canopy or cab stating that a registered engineer has certified that the canopy or cab meets the minimum requirements for structural capacity set forth in paragraph (d) of this section.

(f) An operator may apply to the Director of Technical Support, Mine Safety and Health Administration, Department of Labor, 1100 Wilson Blvd., Room 2329, Arlington, Virginia 22209–3939, for approval of the installation of devices to be used in lieu of substantially constructed canopies or cabs on self-propelled diesel-powered and electric face equipment. The Director of Technical Support may approve such devices if he determines that the use thereof will afford the equipment operator no less than the same measure of protection from falls of roof, face, or rib, or from rib and face rolls as would a substantially constructed canopy or cab meeting the requirements of this section.

[37 FR 20690, Oct. 3, 1972, as amended at 41 FR 23200, June 9, 1976; 43 FR 12320, Mar. 24, 1978; 47 FR 28096, June 29, 1982; 61 FR 55527, Oct. 25, 1996; 67 FR 38386, June 4, 2002]

EFFECTIVE DATE NOTE: At 42 FR 34877, July 7, 1977, the dates appearing in paragraphs (a)(5)(ii) and (a)(6) of § 75.1710–1 were suspended indefinitely, effective July 1, 1977.

§ 75.1711 Sealing of mines.

[STATUTORY PROVISIONS]

On or after March 30, 1970, the opening of any coal mine that is declared inactive by the operator, or is permanently closed, or abandoned for more than 90 days, shall be sealed by the operator in a manner prescribed by the Secretary. Openings of all other mines shall be adequately protected in a manner prescribed by the Secretary to prevent entrance by unauthorized persons.

§ 75.1711–1 Sealing of shaft openings.

Shaft openings required to be sealed under § 75.1711 shall be effectively capped or filled. Filling shall be for the entire depth of the shaft and, for the first 50 feet from the bottom of the coalbed, the fill shall consist of incombustible material. Caps consisting of a 6-inch thick concrete cap or other equivalent means may be used for sealing. Caps shall be equipped with a vent pipe at least 2 inches in diameter extending for a distance of at least 15 feet above the surface of the shaft.

§ 75.1711–2 Sealing of slope or drift openings.

Slope or drift openings required to be sealed under § 75.1711 shall be sealed with solid, substantial, incombustible material, such as concrete blocks, bricks or tile, or shall be completely filled with incombustible material for a distance of at least 25 feet into such openings.

§ 75.1711–3 Openings of active mines.

The openings of all mines not declared by the operator, to be inactive, permanently closed, or abandoned for less than 90 days shall be adequately fenced or posted with conspicuous signs prohibiting the entrance of unauthorized persons.

§ 75.1712 Bath houses and toilet facilities.

[STATUTORY PROVISIONS]

The Secretary may require any operator to provide adequate facilities for the miners to change from the clothes worn underground, to provide for the storing of such clothes from shift to shift, and to provide sanitary and bathing facilities. Sanitary toilet facilities shall be provided in the active workings of the mine when such surface facilities are not readily accessible to the active workings.

[35 FR 17890, Nov. 20, 1970, as amended at 60 FR 33723, June 29, 1995]

§ 75.1712–1 Availability of surface bathing facilities; change rooms; and sanitary facilities.

Except where a waiver has been granted pursuant to the provisions of § 75.1712–4, each operator of an underground coal mine shall on and after December 30, 1970, provide bathing facilities, clothing change rooms, and sanitary facilities, as hereinafter prescribed, for the use of the miners at the mine.

§ 75.1712–2 Location of surface facilities.

Bathhouses, change rooms, and sanitary toilet facilities shall be in a location convenient for the use of the miners. Where such facilities are designed to serve more than one mine, they shall be centrally located so as to be as convenient for the use of the miners in all the mines served by such facilities.

§ 75.1712–3 Minimum requirements of surface bathing facilities, change rooms, and sanitary toilet facilities.

(a) All bathing facilities, change rooms, and sanitary toilet facilities shall be provided with adequate light, heat, and ventilation so as to maintain a comfortable air temperature and to minimize the accumulation of moisture and odors, and such facilities shall be maintained in a clean and sanitary condition.

(b) Bathing facilities, change rooms, and sanitary toilet facilities shall be constructed and equipped so as to comply with applicable State and local building codes: *Provided, however*, That where no State or local building codes apply to such facilities, or where no State or local building codes exist, such facilities shall be constructed and equipped so as to meet the minimum construction requirements of the National Building Code; and the minimum plumbing requirements of the U.S.A. Standard Plumbing Code, ASA A40.8–1955.

(c) In addition to the minimum requirements specified in paragraphs (a) and (b) of this § 75.1712–3, facilities maintained in accordance with § 75.1712–1 shall include the following:

(1) *Bathing facilities*. (i) Showers shall be provided with both hot and cold water.

(ii) At least one shower head shall be provided where five or less miners use such showers.

(iii) Where five or more miners use such showers, sufficient showers shall be furnished to provide approximately one shower head for each five miners.

(iv) A suitable cleansing agent shall be provided for use at each shower.

(2) *Sanitary toilet facilities*. (i) At least one sanitary flush toilet shall be provided where 10 or less miners use such facilities.

(ii) Where 10 or more miners use such sanitary toilet facilities, sufficient toilets shall be furnished to provide approximately one sanitary flush toilet for each 10 miners.

(iii) Where 30 or more miners use sanitary toilet facilities, one urinal may be substituted for one sanitary flush toilet, however, where such substitutions are made they shall not reduce the number of toilets below a ratio of two toilets to one urinal.

(iv) An adequate supply of toilet paper shall be provided with each toilet.

(v) Adequate handwashing facilities or hand lavatories shall be provided in or adjacent to each toilet facility.

(3) *Change rooms*. (i) Individual clothes storage containers or lockers shall be provided for storage of miners clothing and other incidental personal belongings during and between shifts.

(ii) Change rooms shall be provided with ample space to permit the use of such facilities by all miners changing clothes prior to and after each shift.

§ 75.1712–4 Waiver of surface facilities requirements.

The Coal Mine Safety District Manager for the district in which the mine is located may, upon written application by the operator, waive any or all of the requirements of §§ 75.1712–1 through 75.1712–3 if he determines that the operator of the mine cannot or need not meet any part or all of such requirements, and, upon issuance of such waiver, he shall set forth the facilities which will not be required and the specific reason or reasons for such waiver.

[35 FR 17890, Nov. 20, 1970, as amended at 60 FR 33723, June 29, 1995]

§ 75.1712–5 Application for waiver of surface facilities.

Applications for waivers of the requirements of §§ 75.1712–1 through 75.1712–3 shall be filed with the Coal Mine Safety District Manager and shall contain the following information:

(a) The name and address of the mine operator;

(b) The name and location of the mine;

(c) A statement explaining why, in the opinion of the operator, the installation or maintenance of the facilities is impractical or unnecessary.

§ 75.1712–6 Underground sanitary facilities; installation and maintenance.

(a) Except as provided in § 75.1712–7, each operator of an underground coal mine shall provide and maintain one sanitary toilet in a dry location under protected roof, within 500 feet of each working place in the mine where miners are regularly employed during the mining cycle. A single sanitary toilet may serve two or more working places in the same mine, if it is located within 500 feet of each such working place.

(b) Sanitary toilets shall have an attached toilet seat with a hinged lid and a toilet paper holder together with an adequate supply of toilet tissue, except that a toilet paper holder is not required for an unenclosed toilet facility.

(c) Only flush or nonflush chemical or biological toilets, sealed bag toilets, and vault toilets meet the requirements of this section. Privies and combustion or incinerating toilets are prohibited underground.

[68 FR 37087, June 23, 2003]

§ 75.1712–7 Underground sanitary facilities; waiver of requirements.

If it has been determined by the Coal Mine Safety District Manager for the district in which the mine is located that sanitary toilets cannot be provided and maintained within 500 feet of

a working place because of the thickness of the coal seam or because of any other physical restriction in the underground workings, he may, upon written application by the operator, waive the location requirements for underground sanitary facilities with respect to such working place.

§ 75.1712–8 Application for waiver of location requirements for underground sanitary facilities.

Applications for waivers of the location requirements of § 75.1712–6 shall be filed with the Coal Mine Safety District Manager and shall contain the following information:

(a) The name and address of the mine operator;

(b) The name and location of the mine;

(c) The thickness of the coal seam in each working place in the mine for which a waiver is requested; and

(d) Other physical restrictions in the mine (for example, poor roof conditions, excessive water, timbering, etc.).

If a sanitary toilet cannot be installed within 500 feet of a working place because of physical conditions other than the thickness of the coal seam, the operator shall also include a short statement specifying areas in the mine which could be considered possible alternative sites for installation of such facilities.

§ 75.1712–9 Issuance of waivers.

Following the receipt of an application submitted in accordance with the provisions of § 75.1712–8, the Coal Mine Safety District Manager shall, if he determines that the operator cannot meet the location requirements of § 75.1712–6 with respect to any or all of the working places in the mine because of the coal seam thickness or because of other physical restriction, issue a waiver of the requirements of this section and designate an alternative site for installation of such facilities. The waiver issued shall specify each working place to which it shall apply, set forth the reasons for such waiver, and the reasons for designation of the alternative site.

§ 75.1712–10 Underground sanitary facilities; maintenance.

Sanitary toilets shall be regularly maintained in a clean and sanitary condition. Holding tanks shall be serviced and cleaned when full and in no case less than once each week by draining or pumping or by removing them to the surface for cleaning or recharging. Transfer tanks and transfer equipment used underground shall be equipped with suitable fittings to permit complete drainage of holding tanks without spillage and allow for the sanitary transportation of wastes to the surface. Waste shall be disposed of on the surface in accordance with State and local laws and regulations.

§ 75.1713 Emergency medical assistance; first-aid.

[STATUTORY PROVISIONS]

Each operator shall make arrangements in advance for obtaining emergency medical assistance and transportation for injured persons. Emergency communications shall be provided to the nearest point of assistance. Selected agents of the operator shall be trained in first-aid and first-aid training shall be made available to all miners. Each coal mine shall have an adequate supply of first-aid equipment located on the surface, at the bottom of shafts and slopes, and at other strategic locations near the working faces. In fulfilling each of the requirements of this section, the operator shall meet at least minimum requirements prescribed by the Secretary of Health and Human Services.

[35 FR 17890, Nov. 20, 1970, as amended at 47 FR 14696, Apr. 6, 1982; 60 FR 33723, June 29, 1995]

§ 75.1713–1 Arrangements for emergency medical assistance and transportation for injured persons; agreements; reporting requirements; posting requirements.

(a) Each operator of an underground coal mine shall make arrangements with a licensed physician, medical service, medical clinic, or hospital to provide 24-hour emergency medical assistance for any person injured at the mine.

(b) Each operator of an underground coal mine shall make arrangements with an ambulance service, or otherwise provide, for 24-hour emergency transportation for any person injured at the mine.

(c) Each operator shall, on or before December 30, 1970, report to the District Manager for the district in which the mine is located the name, title and address of the physician, medical service, medical clinic, hospital or ambulance service with whom arrangements have been made, or otherwise provided, in accordance with the provisions of paragraphs (a) and (b) of this § 75.1713–1.

(d) Each operator shall, within 10 days after any change of the arrangements required to be reported under the provisions of this § 75.1713–1, report such changes to the District Manager. If such changes involve a substitution of persons, the operator shall provide the name, title, and address of the person substituted together with the name and address of the medical service, medical clinic, hospital, or ambulance service with which such person or persons are associated.

(e) Each operator shall, immediately after making an arrangement required under the provisions of paragraphs (a) and (b) of this § 75.1713–1, or immediately after any change of such arrangement, post at appropriate places at the mine the names, titles, addresses, and telephone numbers of all persons or services currently available under such arrangements to provide medical assistance and transportation at the mine.

§ 75.1713–2 Emergency communications; requirements.

(a) Each operator of an underground coal mine shall establish and maintain a communication system from the mine to the nearest point of medical assistance for use in an emergency.

(b) The emergency communication system required to be maintained under paragraph (a) of this § 75.1713–2 may be established by telephone or radio transmission or by any other means of prompt communication to any facility (for example, the local sheriff, the State highway patrol, or local hospital) which has available the means of communication with the person or persons providing emergency medical assistance or transportation in accordance with the provisions of § 75.1713–1.

§ 75.1713–3 First-Aid training; supervisory employees.

The mine operator shall conduct first-aid training courses for selected supervisory employees at the mine. Within 60 days after the selection of a new supervisory employee to be so trained, the mine operator shall certify by signature and date the name of the employee and date on which the employee satisfactorily completed the first-aid training course. The certification shall be kept at the mine and made available on request to an authorized representative of the Secretary.

[56 FR 1478, Jan. 14, 1991]

§ 75.1713–4 First-aid training program; availability of instruction to all miners.

On or before June 30, 1971, each operator of an underground coal mine shall make available to all miners employed in the mine a course of instruction in first-aid conducted by the operator or under the auspices of the operator, and such a course of instruction shall be made available to newly employed miners within 6 months after the date of employment.

§ 75.1713–5 First-aid training program; retraining of supervisory employees; availability to all miners.

Beginning January 1, 1971, each operator of an underground coal mine shall conduct refresher first-aid training courses each calendar year for all selected supervisory employees, and make available refresher first-aid training courses to all miners employed in the mine.

§ 75.1713–6 First-aid training program; minimum requirements.

(a) All first-aid training programs required under the provisions of §§ 75.1713–3 and 75.1713–4 shall include 10 class hours of training in a course of instruction similar to that outlined in ''First Aid, A Bureau of Mines Instruction Manual.''

(b) Refresher first-aid training programs required under the provisions of § 75.1713–5 shall include five class hours of refresher training in a course of instruction similar to that outlined in ''First Aid, A Bureau of Mines Instruction Manual.''

§ 75.1713–7 First-aid equipment; location; minimum requirements.

(a) Each operator of an underground coal mine shall maintain a supply of the first-aid equipment set forth in paragraph (b) of this § 75.1713–7 at each of the following locations:

(1) At the mine dispatcher's office or other appropriate work area on the surface in close proximity to the mine entry;

(2) At the bottom of each regularly traveled slope or shaft; however, where the bottom of such slope or shaft is not more than 1,000 feet from the surface, such first-aid supplies may be maintained on the surface at the entrance to the mine; and

(3) At a point in each working section not more than 500 feet outby the active working face or faces.

(b) The first-aid equipment required to be maintained under the provisions of paragraph (a) of this § 75.1713–7 shall include at least the following:

(1) One stretcher;

(2) One broken-back board. (If a splint stretcher combination is used it will satisfy the requirements of both (1) and (2)).

(3) 24 triangular bandages (15 if a splint-stretcher combination is used).

(4) Eight 4-inch bandage compresses;

(5) Eight 2-inch bandage compresses.

(6) Twelve 1-inch adhesive compresses;

(7) One foille;

(8) Two cloth blankets:

(9) One rubber blanket or equivalent substitute.

(10) Two tourniquets;

(11) One 1-ounce bottle of aromatic spirits of ammonia or 1 dozen ammonia ampules.

(12) The necessary complements of arm and leg splints or two each inflatable plastic arm and leg splints.

(c) All first-aid supplies required to be maintained under the provisions of paragraphs (a) and (b) of this § 75.1713–7 shall be stored in suitable, sanitary, dust tight, moisture proof containers and such supplies shall be accessible to the miners.

§ 75.1714 Availability of approved self-rescue devices; instruction in use and location.

(a) Each operator shall make available to each miner who goes underground, and to visitors authorized to enter the mine by the operator, an approved self-rescue device or devices which is adequate to protect such person for 1 hour or longer.

(b) Before any person authorized by the operator goes underground, the operator shall instruct and train such person in accordance with provisions set forth in 30 CFR part 48.

[43 FR 54246, Nov. 21, 1978, as amended at 53 FR 10336, Mar. 30, 1988; 60 FR 30401, June 8, 1995; 71 FR 71454, Dec. 8, 2006]

§ 75.1714–1 Approved self-rescue devices.

The requirements of § 75.1714 shall be met by making available to each person referred to in that section a self-rescue device or devices, which have been approved by MSHA and NIOSH under 42 CFR part 84, as follows:

(a) A 1-hour SCSR;

(b) A SCSR of not less than 10 minutes and a 1-hour canister; or

(c) Any other self-contained breathing apparatus which provides protection for a period of 1 hour or longer and which is approved for use by MSHA as a self-rescue device when used and maintained as prescribed by MSHA.

[60 FR 30401, June 8, 1995]

§ 75.1714–2 Self-rescue devices; use and location requirements.

(a) Self-rescue devices shall be used and located as prescribed in paragraphs (b) through (f) of this section.

(b) Except as provided in paragraph (c), (d), (e), or (f) of this section, self-rescue devices shall be worn or carried at all times by each person when underground.

(c) Where the wearing or carrying of the self-rescue device is hazardous to the person, it shall be placed in a readily accessible location no greater than 25 feet from such person.

(d) Where a person works on or around equipment, the self-rescue device may be placed in a readily accessible location on such equipment.

(e) A mine operator may apply to the District Manager under § 75.1502 for permission to place the SCSR more than 25 feet away.

(1) The District Manager shall consider the following factors in deciding whether to permit an operator to place a SCSR more than 25 feet from a miner:

(i) Distance from affected sections to surface,

(ii) Pitch of seam in affected sections,

(iii) Height of coal seam in affected sections,

(iv) Location of escapeways,

(v) Proposed location of SCSRs,

(vi) Type of work performed by affected miners,

(vii) Degree of risk to which affected miners are exposed,

(viii) Potential for breaking into oxygen deficient atmospheres,

(ix) Type of risk to which affected miners are exposed,

(x) Accident history of mine, and

(xi) Other matters bearing upon the safety of miners.

(2) Such application shall not be approved by the District Manager unless it provides that, while underground, all miners whose SCSR is more than 25 feet away shall have a FSR approved by MSHA and NIOSH under 42 CFR part 84 sufficient to enable each miner to get to a SCSR.

(3) An operator may not obtain permission under paragraph (e) of this section to place SCSRs more than 25 feet away from miners on trips into and out of the mine.

(f) If an SCSR is not carried out of the mine at the end of a miner's shift, the place of storage shall be approved by the District Manager. A sign made of reflective material with the word ''SCSRs'' or ''SELF-RESCUERS'' shall be conspicuously posted at each SCSR storage location. Direction signs made of a reflective material shall be posted leading to each storage location.

(g) Where devices of not less than 10 minutes and 1 hour are made available in accordance with § 75.1714–1(b), such devices shall be used and located as follows:

(1) Except as provided in paragraphs (c) and (d) of this section, the device of not less than 10 minutes shall be worn or carried at all times by each person when underground, and

(2) The one-hour canister shall be available at all times to all persons when underground in accordance with a plan submitted by the mine operator and approved by the District Manager. When the one-hour canister is placed in a storage location, a sign made of a reflective material with the word ''SCSRs'' or ''SELF-RESCUERS'' shall be conspicuously posted at each storage location. Direction signs made of a reflective material shall be posted leading to each storage location.

[43 FR 54246, Nov. 21, 1978, as amended at 60 FR 30401, June 8, 1995; 69 FR 8108, Feb. 23, 2004; 71 FR 12270, Mar. 9, 2006; 71 FR 71454, Dec. 8, 2006]

§ 75.1714–3 Self-rescue devices; inspection, testing, maintenance, repair, and recordkeeping.

(a) Each operator shall provide for proper inspection, testing, maintenance, and repair of self-rescue devices by a person trained to perform such functions.

(b) After each time a self-rescue device is worn or carried by a person, the device shall be inspected for damage and for the integrity of its seal by a person trained to perform this function. Self-rescue devices with broken seals or which are damaged so that the device will not function properly shall be removed from service.

(c) All FSRs approved by MSHA and NIOSH under 42 CFR part 84, except devices using vacuum containers as the only method of sealing, shall be tested at intervals not exceeding 90 days by weighing each device on a scale or balance accurate to within +1 gram. A device that weighs more than 10 grams over its original weight shall be removed from service.

(d) All SCSRs approved by MSHA and NIOSH under 42 CFR part 84 shall be tested in accordance with instructions approved by MSHA and NIOSH. Any device which does not meet the specified test requirements shall be removed from service.

(e) At the completion of each test required by paragraphs (c) and (d) of this section the person making the tests shall certify by signature and date that the tests were done. This person shall make a record of all corrective action taken. Certifications and records shall be kept at the mine and made available on request to an authorized representative of the Secretary.

(f) Self-rescue devices removed from service shall be repaired for return to service only by a person trained to perform such work and only in accordance with the manufacturer's instructions.

[43 FR 54246, Nov. 21, 1978, as amended at 47 FR 14706, Apr. 6, 1982; 56 FR 1478, Jan. 14, 1991; 60 FR 30402, June 8, 1995; 60 FR 33723, June 29, 1995]

§ 75.1714–4 Additional self-contained self-rescuers (SCSRs).

(a) *Additional SCSRs in work places*. In addition to the requirements in §§ 75.1714, 75.1714–1, 75.1714–2, and 75.1714–3 of this part, the mine operator shall provide the following:

(1) At least one additional SCSR, which provides protection for a period of one hour or longer, for each person at a fixed underground work location.

(2) Additional SCSRs along the normal travel routes for pumpers, examiners, and other persons who do not have a fixed work location to be stored at a distance an average miner could walk in 30 minutes. The SCSR storage locations shall be determined by using one of the methods found under paragraph (c)(2) of this section.

(b) *Additional SCSRs on mantrips*. If a mantrip or mobile equipment is used to enter or exit the mine, at least one additional SCSR, which provides protection for a period of one hour or longer, shall be available for each person who uses such transportation from portal to portal.

(c) *Additional SCSRs in escapeways*. When each person underground cannot safely evacuate the mine within 30 minutes, the mine operator shall provide additional SCSRs stored in each required escapeway.

(1) Each storage location shall contain at least one SCSR, which provides protection for a period of one hour or longer, for every person who will be inby that location.

(2) Storage locations shall be spaced along each escapeway at 30-minute travel distances no greater than the distances determined by—

(i) Calculating the distance an average miner walks in 30 minutes by using the time necessary for each miner in a sample of typical miners to walk a typical length of each escapeway; or

(ii) Using the SCSR storage location spacing specified in the following table, except for escapeways with grades over 5 percent.

Average entry height	Maximum distance between SCSR storage locations (in ft.)
<40 in. (Crawl)	2,200
>40–<50 in. (Duck Walk)	3,300
>50–<65 in. (Walk Head Bent)	4,400
>65 in. (Walk Erect)	5,700

(d) *Additional SCSRs in hardened rooms*. As an alternative to providing SCSR storage locations in each escapeway, the mine operator may store SCSRs in a hardened room located between adjacent escapeways.

(1) The hardened room shall be designed and constructed to the same explosion force criteria as seals.

(2) The hardened room shall include a means to provide independent, positive pressure ventilation from the surface during an emergency.

(3) The District Manager shall approve the design and construction of hardened rooms in the ventilation plan.

(4) These SCSR storage locations shall be spaced in accordance with paragraph (c) of this section.

(e) *Storage location accessibility*. All SCSRs required under this section shall be stored according to the manufacturers' instructions, in conspicuous locations readily accessible by each person in the mine.

(f) *Storage location signs*. A sign made of reflective material with the words ''SCSRs'' or ''SELF-RESCUERS'' shall be conspicuously posted at each storage location. Direction signs made of a reflective material shall be posted leading to each storage location.

[71 FR 71454, Dec. 8, 2006]

§ 75.1714–5 Map locations of self-contained self-rescuers (SCSR).

The mine operator shall indicate the locations of all stored SCSRs on the mine maps required by §§ 75.1200 and 75.1505 of this part.

[71 FR 71454, Dec. 8, 2006]

§ 75.1714–6 Emergency tethers.

At least one tether, which is a durable rope or equivalent material designed to permit members of a mine crew to link together while evacuating the mine during an emergency, shall be provided and stored with the additional SCSRs on the fixed work location and on the mobile equipment required in §§ 75.1714–4(a)(1) and (b) of this part.

[71 FR 71454, Dec. 8, 2006]

§ 75.1714–7 Multi-gas detectors.

(a) *Availability*. A mine operator shall provide an MSHA-approved, handheld, multi-gas detector that can measure methane, oxygen, and carbon monoxide to each group of underground miners and to each person who works alone, such as pumpers, examiners, and outby miners.

(b) *Qualified person*. At least one person in each group of underground miners shall be a qualified person under § 75.150 of this part and each person who works alone shall be trained to use the multi-gas detector.

(c) *Maintenance and calibration*. Multi-gas detectors shall be maintained and calibrated as specified in § 75.320 of this part.

[71 FR 71454, Dec. 8, 2006]

§ 75.1714–8 Reporting SCSR inventory and malfunctions; retention of SCSRs.

(a) *SCSR inventory*. A mine operator shall submit to MSHA a complete inventory of all SCSRs at each mine. New mines shall submit the inventory within 3 months of beginning operation.

(1) The inventory shall include—

(i) Mine name, MSHA mine ID number, and mine location; and

(ii) For each SCSR unit, the manufacturer, the model type, the date of manufacture, and the serial number.

(2) In the event that a change in the inventory occurs, a mine operator shall report the change to MSHA within the quarter that the change occurs (Jan–Mar, Apr–Jun, Jul–Sep, Oct–Dec).

(b) *Reporting SCSR problems*. A mine operator shall report to MSHA any defect, performance problem, or malfunction with the use of an SCSR. The report shall include a detailed description of the problem and, for each SCSR involved, the information required by paragraph (a)(1) of this section.

(c) *Retention of problem SCSRs*. The mine operator shall preserve and retain each SCSR reported under paragraph (b) of this section for 60 days after reporting the problem to MSHA.

[71 FR 71454, Dec. 8, 2006]

§ 75.1715 Identification check system.

[STATUTORY PROVISIONS]

Each operator of a coal mine shall establish a check-in and check-out system which will provide positive identification of every person underground, and will provide an accurate record of the persons in the mine kept on the surface in a place chosen to minimize the danger of destruction by fire or other hazard. Such record shall bear a number identical to an identification check that is securely fastened to the lamp belt worn by the person underground. The identification check shall be made of a rust resistant metal of not less than 16 gauge.

§ 75.1716 Operations under water.

[STATUTORY PROVISIONS]

Whenever an operator mines coal from a coal mine opened after March 30, 1970, or from any new working section of a mine opened prior to such date, in a manner that requires the construction, operation, and maintenance of tunnels under any river, stream, lake, or other body of water, that is, in the judgment of the Secretary, sufficiently large to constitute a hazard to miners, such operator shall obtain a permit from the Secretary which shall include such terms and conditions as he deems appropriate to protect the safety of miners working or passing through such tunnels from caveins and other hazards. Such permits shall require, in accordance with a plan to be approved by the Secretary,

that a safety zone be established beneath and adjacent to such body of water. No plan shall be approved unless there is a minimum of cover to be determined by the Secretary, based on test holes drilled by the operator in a manner to be prescribed by the Secretary. No such permit shall be required in the case of any new working section of a mine which is located under any water resource reservoir being constructed by a Federal agency on December 30, 1969, the operator of which is required by such agency to operate in a manner that protects the safety of miners working in such section from cave-ins and other hazards.

[35 FR 17890, Nov. 20, 1970, as amended at 60 FR 33723, June 29, 1995]

§ 75.1716–1 Operations under water; notification by operator.

An operator planning to mine coal from coal mines opened after March 30, 1970, or from working sections in mines opened prior to such date, and in such manner that mining operations will be conducted, or tunnels constructed, under any river, stream, lake, or other body of water, shall give notice to the Coal Mine Safety District Manager in the district in which the mine is located prior to the commencement of such mining operations.

§ 75.1716–2 Permit required.

If in the judgment of the Coal Mine Safety District Manager the proposed mining operations referred to in § 75.1716–1 constitute a hazard to miners, he shall promptly so notify the operator that a permit is required.

§ 75.1716–3 Applications for permits.

An application for a permit required under this section shall be filed with the Coal Mine Safety District Manager and shall contain the following general information:

(a) Name and address of the company.

(b) Name and address of the mine.

(c) Projected mining and ground support plans.

(d) A mine map showing the locations of the river, stream, lake, or other body of water and its relation to the location of all working places.

(e) A profile map showing the type of strata and the distance in elevation between the coal bed and the river, stream, lake or other body of water involved. The type of strata shall be determined by core test drill holes as prescribed by the Coal Mine Safety District Manager.

§ 75.1716–4 Issuance of permits.

If the Coal Mine Safety District Manager determines that the proposed mining operations under water can be safely conducted, he shall issue a permit for the conduct of such operations under such conditions as he deems necessary to protect the safety of miners engaged in those operations.

§ 75.1717 Exemptions.

[STATUTORY PROVISIONS]

No notice under § 75.1716–1 and no permit under § 75.1716–2 shall be required in the case of any new working section of a mine which is located under any water resource reservoir being constructed by a Federal agency as of December 30, 1969, and where the operator is required by such agency to operate in a manner that adequately protects the safety of miners.

§ 75.1718 Drinking water.

[STATUTORY PROVISIONS]

An adequate supply of potable water shall be provided for drinking purposes in the active workings of the mine, and such water shall be carried, stored, and otherwise protected in sanitary containers.

§ 75.1718–1 Drinking water; quality.

(a) Potable water provided in accordance with the provisions of § 75.1718 shall meet the applicable minimum health requirements for drinking water established by the State or community in which the mine is located.

(b) Where no state or local health requirements apply to drinking water or where no state or local minimum health requirements exist, drinking water provided in accordance with the provisions of § 75.1718 shall contain a minimum of 0.2 milligrams of free chlorine per liter of water.

§ 75.1719 Illumination; purpose and scope of §§ 75.1719 through 75.1719–4; time for compliance.

(a) Section 317(e) of the Act (30 U.S.C. 877(e)) directs and authorizes the Secretary to propose and promulgate standards under which all working places in a mine shall be illuminated by permissible lighting while persons are working in such places §§ 75.1719 through 75.1719–4 prescribe the requirements for illumination of working places in underground coal mines while persons are working in such places and while self-propelled mining equipment is operated in the working place.

(b) Mine operators shall comply with §§ 75.1719 through 75.1719–4 not later than July 1, 1978.

[41 FR 43534, Oct. 1, 1976, as amended at 43 FR 13564, Mar. 31, 1978]

§ 75.1719–1 Illumination in working places.

(a) Each operator of an underground coal mine shall provide each working place in the mine with lighting as prescribed in §§ 75.1719–1 and 75.1719–2 while self-propelled mining equipment is operated in the working place.

(b) *Self-propelled mining equipment; definition*. For the purposes of §§ 75.1719 through 75.1719–4, ''self-propelled mining equipment'' means equipment which possesses the capability of moving itself or its associated components from one location to another by electric, hydraulic, pneumatic, or mechanical power supplied by a source located on the machine or transmitted to the machine by cables, ropes, or chains.

(c) The lighting prescribed in this section shall be in addition to that provided by personal cap lamps.

(d) The luminous intensity (surface brightness) of surfaces that are in a miner's normal field of vision of areas in working places that are required to be lighted shall be not less than 0.06 footlamberts when measured in accordance with § 75.1719–3.

(e) When self-propelled mining equipment specified in paragraphs (e)(1) through (e)(6) of this section is operated in a working place, the areas within a miner's normal field of vision which shall be illuminated in the working place shall be as prescribed in paragraphs (e)(1) through (e)(6) of this section.

(1) *Continuous miners and coal-loading equipment*. In working places in which continuous miners and coal-loading equipment are operated, the areas which shall be illuminated shall be as follows:

(i) The face, and

(ii) The ribs, roof, floor, and exposed surface of mining equipment, which are between the face and the inby end of the shuttle car or other conveying equipment while in position to receive material.

(2) *Self-loading haulage equipment used as a loading machine*. In working places in which self-loading haulage equipment is operated to load material, the areas which shall be illuminated shall be as follows:

(i) The face, and

(ii) The ribs, roof, floor, and exposed surfaces of mining equipment, which are between the face and a point 5 feet outby the machine.

(3) *Cutting and drilling equipment*. In working places in which cutting or drilling equipment is operated, the areas which shall be illuminated shall be as follows:

(i) The ribs, roof, floor, and exposed surfaces of mining equipment, which are between the face and a point 5 feet outby the machine.

(4) *Shortwall and longwall mining equipment*. In working places in which shortwall or longwall mining equipment is operated, the areas which shall be illuminated shall be as follows:

(i) The area for the length of the self-advancing roof suport system and which is between the gob-side of the travelway and the side of the block of coal from which coal is being extracted, and

(ii) The control station, and the head piece and tail piece of the face conveyor, and

(iii) The roof and floor for a distance of 5 feet horizontally from the control station, head piece and tail piece.

(5) *Roof bolting equipment*. In working places in which roof bolting equipment is operated, the areas which shall be illuminated shall be as follows:

(i) *Where the distance from the floor, to the roof is 5 feet, or less:* the face, ribs, roof, floor, and exposed surfaces of

mining equipment, which are within an area the perimeter of which is a distance of 5 feet from the machine, when measured parallel to the floor.

(ii) *Where the distance from the floor to the roof is more than 5 feet:* the face, ribs, roof, floor, and exposed surfaces of mining equipment, which are within an area the perimeter of which from the front and sides of the machine is a distance equal to the distance from the floor to the roof and from the rear of the machine a distance of 5 feet, when measured parallel to the floor.

(6) *Other self-propelled equipment.* Unless the entire working place is illuminated by stationary lighting equipment, in working places in which self-propelled equipment is operated, other than equipment specified in paragraphs (e)(1) through (e)(5) of this section, illumination shall be provided as follows:

(i) Luminaires shall be installed on each machine operated in the working place which shall illuminate a face or rib coal surface which is within 10 feet of the front and the rear of the machine to a luminous intensity of not less than 0.06 footlamberts, and

(ii) The height and width of the area of the coal surface which shall be illuminated shall equal the height and width, respectively, of the machine on which the luminaires are installed, and

(iii) The luminaires in the direction of travel shall be operated at all times the equipment is being trammed in the working place.

(f) The Administrator, Coal Mine Health and Safety, MSHA, may specify other areas in a working place to be illuminated for the protection of miners while self-propelled mining equipment is being operated in the working place.

(g) Surface brightness of floor, roof, coal and machine surfaces in the normal visual field of a miner shall not vary more than 50 percent between adjacent fields of similar surface reflectance, and the maximum surface brightness of such surface shall not exceed 120 footlamberts when measured in accordance with § 75.1719–3.

[41 FR 43534, Oct. 1, 1976, as amended at 42 FR 18859, Apr. 11, 1977; 43 FR 43458, Sept. 26, 1978; 47 FR 28096, June 29, 1982]

§ 75.1719–2 Lighting fixtures; requirements.

(a) Lighting fixtures shall be permissible.

(b) Lighting fixtures may be installed on self-propelled machines or may be stationary lighting fixtures.

(c)(1) Electrically operated lighting fixtures shall be energized by direct current, or by sinusoidal full wave alternating current not less than 50 cycles per second (100 pulses per second), or by an equivalent power source that causes no greater flicker.

(2) Alternating current circuits supplying power to stationary lighting fixtures shall contain conductors energized at voltages not greater than 70 volts to ground. Alternating current circuits, energized at 100 volts or more and used to supply power to staionary lighting fixtures, shall originate at a transformer having a center or neutral tap grounded to earth through a proper resistor, which shall be designed to limit fault current to not more than 5 amperes. A grounding circuit in accordance with § 75.701–4 shall orignate at the grounded terminal of the grounding resistor and extend along with the power conductors and serve as a grounding conductor for the frames of all equipment receiving power from the circuit. The ground fault current rating of grounding resistors shall meet the ''extended time rating'' set forth in the Institute of Electrical and Electronics Engineers, Inc. Standard No. 32 (IEEE Std. 32–1972) which is hereby incorporated by reference and made a part hereof. The incorporated publication is available for examination at each MSHA Coal Mine Safety and Health district office, and may be obtained from the Institute of Electrical and Electronics Engineers, Inc., Publications Office, 10662 Los Vaqueros Circle, P.O. Box 3014 Los Alamitos, CA 90720–1264 Telephone: 800–272–6657 (toll free); *http://www.ieee.org*.

(3) Machine-mounted lighting fixtures shall be electrically grounded to the machine by a separate grounding conductor in compliance with § 75.701–4.

(d) Direct current circuits in excess of a nominal voltage of 300 volts shall not be used to supply power to stationary light fixtures.

(e) Cables conducting power to stationary lighting fixtures from both alternating and direct current power sources, other than intrinsically safe devices, shall be considered trailing cables, and shall meet rhe requirements of Subpart G of this part. In addition, such cables shall be protected against overloads and short circuits by a suitable circuit breaker or other device approved by the Secretary. Circuit breakers or other device approved by the Secretary protecting trailing cables receiving power from resistance grounded circuits shall be equipped with a ground trip arrangement which shall be designed to deenergize the circuit at not more than 50% of the available fault current.

(f) Before shunts are removed from blasting caps, lighting fixtures and associated cables located in the same working place shall be deenergized. Furthermore, lighting fixtures shall be removed out of the line of blast and not less than 50 feet from the blasting operation unless otherwise protected against flying debris.

(g) Lighting fixtures shall be designed and installed to minimize discomfort glare.

[41 FR 43534, Oct. 1, 1976, as amended at 71 FR 16669, Apr. 3, 2006]

§ 75.1719–3 Methods of measurement; light measuring instruments.

(a) Compliance with § 75.1719–1(d) shall be determined by MSHA by measuring luminous intensity (surface brightness).

(b) In measuring luminous intensity the following procedures shall be used:

(1) In areas of working places specified in §§ 75.1719.1(e)(1) through 75.1719–1(e)(3) luminous intensity measurements of the face, ribs, roof, floor, and exposed surfaces of mining equipment, shall be made with the machine idle and located in the approximate center of the working place with the cutting, loading, or drilling head toward the face and not more than 3 feet from the face.

(2) In areas of working places specified in § 75.1719–1(e)(4) luminous intensity measurements may be made at any time longwall or shortwall mining equipment is operated except that when measurements are made in the vicinity of shearers, plows, or continuous miners, the equipment shall be idle while measurements are being made.

(3) In areas of working places specified in § 75.1719–1(e)(5) luminous intensity measurements of the face, ribs, roof, floor, and exposed surfaces of mining equipment, shall be made with the machine idle and located in the approximate center of the working place with the drilling head toward the face and a distance from the face of 5 feet, or the distance from the floor to the roof, whichever is applicable. When the machine is located in the center of the working place and the surfaces of the ribs to be illuminated are not within the perimeter of the area determined in accordance with § 75.1719–1(e)(5), the machine shall be positioned the applicable distance from the face and each rib and luminous intensity measurements made for each rib, provided, however, that luminous intensity measurements may be made of the face, roof, floor, and exposed surfaces of mining equipment with the machine so located without locating the machine in the center of the working place.

(4) In areas of working places specified in § 75.1719–1(e)(6), luminous intensity measurements of a coal surface shall be made with the machine idle and located in the approximate center of the working place with the appropriate end toward the face and not less than 9 feet nor more than 10 feet from the face.

(5) The area of surfaces to be measured shall be divided into round or square fields having an area of not less than 3 nor more than 5 square feet as illustrated by the following figure:

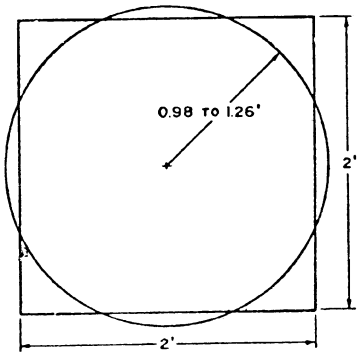

DIRECT MEASUREMENT OF LUMINOUS INTENSITY

(6) Measurements shall be taken with the photometer held approximately perpendicular to the surface being measured and a sufficient distance from the surface to allow the light sensing element in the instrument to receive reflected light from a field of not less than 3 nor more than 5 square feet. The luminous intensity of each such field shall be not less than 0.06 footlambert.

(7) In areas of working places where clearances are restricted to the extent that the photometer cannot be held a sufficient distance from the surface to allow the light sensing element in the instrument to receive reflected light from a field having an area of at least 3 square feet, luminous intensity shall be considered as the average of four uniformly spaced readings taken at the corners and within a square field having an area of approximately 4 square feet. In such instances, the area of each of the individual readings shall not exceed 100 square inches. The average of the four readings shall be not less than 0.06 footlambert. The method of measurement is illustrated by the following figure:

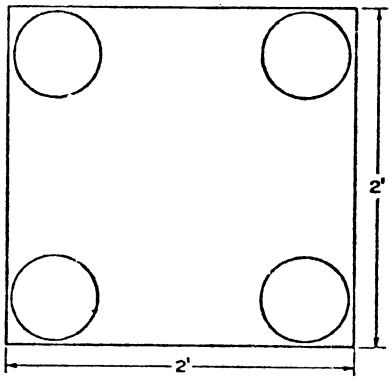

DETERMINATION OF LUMINOUS INTENSITY BY AVERAGING METHOD

(8) Measurements shall not be made where shadows are cast by roof control posts, ventilation equipment, or other obstructions necessary to insure safe mining conditions.

(9) Where machine-mounted light fixtures are used on equipment, except self advancing roof support systems, measurements shall not be made of surfaces on or within 1 foot of a self-propelled machine.

(c) For the purpose of making illumination measurements, an authorized representative of the Secretary may require the installation of temporary roof supports or the removal of the equipment to a similar working place in which permanent roof supports have been installed.

(d) Light measuring instruments shall be properly calibrated and maintained. Instruments shall be calibrated against standards traceable to the National Institute of Standards and Technology (Formerly the National Bureau of Standards) and color corrected to the Commission Internationale de l'Eclairage (CIE) Spectral Luminous Curve. The CIE Spectral Luminous Curve is as follows:

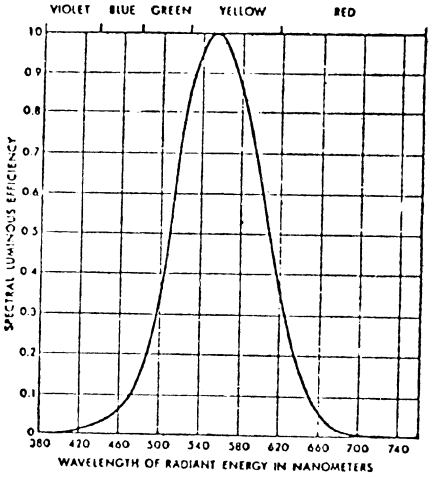

[41 FR 43534, Oct. 1, 1976, as amended at 71 FR 16669, Apr. 3, 2006]

§ 75.1719–4 Mining machines, cap lamps; requirements.

(a) Paint used on exterior surfaces of mining machines shall have a minimum reflectance of 30 percent, except cab interiors and other surfaces which might adversely affect visibility.

(b) When stationary light fixtures are used, red reflectors mounted in protective frames or reflecting tape shall be installed on each end of mining machines, except that continuous mining machines, loaders, and cutters need only have such reflectors or tape on the outby end. Reflectors or reflecting tape shall have an area of not less than 10 square inches.

(c) Each person who goes underground shall be required to wear an approved personal cap lamp or an equivalent portable light.

(d) Each person who goes underground shall be required to wear a hard hat or hard cap which shall have a minimum of 6 square inches of reflecting tape or equivalent paint or material on each side and back.

[41 FR 43534, Oct. 1, 1976]

§ 75.1720 Protective clothing; requirements.

On and after the effective date of this § 75.1720 each miner regularly employed in the active workings of an underground coal mine shall be required to wear the following protective clothing and devices:

(a) Protective clothing or equipment and face-shields or goggles when welding, cutting, or working with molten metal or when other hazards to the eyes exist from flying particles.

(b) Suitable protective clothing to cover those parts of the body exposed to injury when handling corrosive or toxic substances or other materials which might cause injury to the skin.

(c) Protective gloves when handling materials or performing work which might cause injury to the hands; however, gloves shall not be worn where they would create a greater hazard by becoming entangled in the moving parts of equipment.

(d) A suitable hard hat or hard cap. If a hard hat or hard cap is painted, nonmetallic based paint shall be used.

(e) Suitable protective footwear.

[36 FR 19497, Oct. 7, 1971, as amended at 39 FR 7175, Feb. 25, 1974]

§ 75.1720–1 Distinctively colored hard hats, or hard caps; identification for newly employed, inexperienced miners.

Hard hats or hard caps distinctively different in color from those worn by experienced miners shall be worn by each newly employed, inexperienced miner for at least one year from the date of his initial employment as a miner or until he has been qualified or certified as a miner by the State in which he is employed.

[39 FR 7175, Feb. 25, 1974]

§ 75.1721 Opening of new underground coal mines, or reopening and reactivating of abandoned or deactivated coal mines, notification by the operator; requirements.

(a) Each operator of a new underground coal mine, and a mine which has been abandoned or deactivated and is to be reopened or reactivated, shall prior to opening, reopening or reactivating the mine notify the Coal Mine Health and Safety District Manager for the district in which the mine is located of the approximate date of the proposed or actual opening of such mine. Thereafter, and as soon as practicable, the operator of such mine shall

submit all preliminary plans in accordance with paragraphs (b) and (c) of this section to the District Manager and the operator shall not develop any part of the coalbed in such mine unless and until all preliminary plans have been approved.

(b) The preliminary plans required to be submitted by the operator to the District Manager shall be in writing and shall contain the following:

(1) The name and location of the proposed mine and the Mine Safety and Health Administration mine identification number, if known;

(2) The name and address of the mine operator(s);

(3) The name and address of the principal official designated by the operator as the person who is in charge of health and safety at the mine;

(4) The identification and approximate height of the coalbed to be developed;

(5) The system of mining to be employed;

(6) A proposed roof control plan containing the information specified in § 75.220.

(7) A proposed mine ventilation plan containing the information specified in §§ 75.371 and 75.372;

(8) A proposed plan for sealing worked-out areas containing the information specified in §§ 75.371 and 75.372.

(9) A proposed program for searching miners for smoking materials in accordance with the provisions of § 75.1702; and,

(10) A proposed plan for emergency medical assistance and emergency communication in accordance with the provisions of §§ 75.1713–1 and 75.1713–2.

(c) The preliminary plans required to be submitted by the operator to the District Manager shall be in writing and shall contain the following:

(1) The proposed training plan containing the information specified in §§ 48.3 and 48.23 of this chapter, and

(2) A proposed plan for training and retraining certified and qualified persons containing the information specified in § 75.160–1.

[44 FR 9380, Feb. 13, 1979, as amended at 47 FR 23641, May 28, 1982; 57 FR 20929, May 15, 1992]

§ 75.1722 Mechanical equipment guards.

(a) Gears; sprockets; chains; drive, head, tail, and takeup pulleys; flywheels; couplings, shafts; sawblades; fan inlets; and similar exposed moving machine parts which may be contacted by persons, and which may cause injury to persons shall be guarded.

(b) Guards at conveyor-drive, conveyor-head, and conveyor-tail pulleys shall extend a distance sufficient to prevent a person from reaching behind the guard and becoming caught between the belt and the pulley.

(c) Except when testing the machinery, guards shall be securely in place while machinery is being operated.

[38 FR 4976, Feb. 23, 1973]

§ 75.1723 Stationary grinding machines; protective devices.

(a) Stationary grinding machines other than special bit grinders shall be equipped with:

(1) Peripheral hoods (less than 90° throat openings) capable of withstanding the force of a bursting wheel.

(2) Adjustable tool rests set as close as practical to the wheel.

(3) Safety washers.

(b) Grinding wheels shall be operated within the specifications of the manufacturer of the wheel.

(c) Face shields or goggles, in good condition, shall be worn when operating a grinding wheel.

[38 FR 4976, Feb. 23, 1973]

§ 75.1724 Hand-held power tools; safety devices.

Hand-held power tools shall be equipped with controls requiring constant hand or finger pressure to operate the tools or shall be equipped with friction or other equivalent safety devices.

[38 FR 4976, Feb. 23, 1973]

§ 75.1725 Machinery and equipment; operation and maintenance.

(a) Mobile and stationary machinery and equipment shall be maintained in safe operating condition and machinery or equipment in unsafe condition shall be removed from service immediately.

(b) Machinery and equipment shall be operated only by persons authorized to operate such machinery or equipment.

(c) Repairs or maintenance shall not be performed on machinery until the power is off and the machinery is blocked against motion, except where machinery motion is necessary to make adjustments.

(d) Machinery shall not be lubricated manually while in motion, unless equipped with extended fittings or cups.

[38 FR 4976, Feb. 23, 1973]

§ 75.1726 Performing work from a raised position; safeguards.

(a) Men shall not work on or from a piece of mobile equipment in a raised position until it has been blocked in place securely. This does not preclude the use of equipment specifically designed as elevated mobile work platforms.

(b) No work shall be performed under machinery or equipment that has been raised until such machinery or equipment has been securely blocked in position.

[38 FR 4976, Feb. 23, 1973]

§ 75.1727 Drive belts.

(a) Drive belts shall not be shifted while in motion unless the machines are provided with mechanical shifters.

(b) Belt dressing shall not be applied while belts are in motion except where it can be applied without endangering a person.

[38 FR 4976, Feb. 23, 1973]

§ 75.1728 Power-driven pulleys.

(a) Belts, chains, and ropes shall not be guided onto power-driven moving pulleys, sprockets, or drums with the hands except on slow-moving equipment especially designed for hand feeding.

(b) Pulleys of conveyors shall not be cleaned manually while the conveyor is in motion.

(c) Coal spilled beneath belt conveyor drives or tail pieces shall not be removed while the conveyor is in motion, except where such coal can be removed without endangering persons.

[38 FR 4976, Feb. 23, 1973]

§ 75.1729 Welding operations.

Welding operations shall be shielded and the area shall be well ventilated.

[38 FR 4976, Feb. 23, 1973]

§ 75.1730 Compressed air; general; compressed air systems.

(a) All pressure vessels shall be constructed, installed, and maintained in accordance with the standards and specifications of Section VIII ''Unfired Pressure Vessels,'' of the American Society of Mechanical Engineers Boiler and Pressure Vessel Code (1971), which is hereby incorporated by reference and made a part hereof. This document may be purchased from the American Society of Mechanical Engineers, 22 Law Drive, P.O. Box 2900, Fairfield, New Jersey 07007, Phone: 800–843–2763 (toll free); *http://www.asme.org*; and it is available for examination in every MSHA Coal Mine Safety and Health district office.

(b) Compressors and compressed-air receivers shall be equipped with automatic pressure-relief valves, pressure gages, and drain valves.

(c) Repairs involving the pressure system of compressors, receivers, or compressed-air-powered equipment shall not be attempted until the pressure has been relieved from that part of the system to be repaired.

(d) At no time shall compressed air be directed toward a person. When compressed air is used, all necessary precautions shall be taken to protect persons from injury.

(e) Safety chains, suitable locking devices, or automatic cut-off valves shall be used at connections to machines of high-pressure hose lines of three-fourths of an inch inside diameter or larger, and between high-pressure hose lines of three-fourths of an inch inside diameter or larger, where a connection failure would create a hazard. For purposes of this paragraph, high-pressure means pressure of 100 p.s.i. or more.

[38 FR 4976, Feb. 23, 1973, as amended at 71 FR 16669, Apr. 3, 2006]

§ 75.1731 Maintenance of belt conveyors and belt conveyor entries.

(a) Damaged rollers, or other damaged belt conveyor components, which

pose a fire hazard must be immediately repaired or replaced. All other damaged rollers, or other damaged belt conveyor components, must be repaired or replaced.

(b) Conveyor belts must be properly aligned to prevent the moving belt from rubbing against the structure or components.

(c) Materials shall not be allowed in the belt conveyor entry where the material may contribute to a frictional heating hazard.

(d) Splicing of any approved conveyor belt must maintain flame-resistant properties of the belt.

[73 FR 80616, Dec. 31, 2008]

Subpart S [Reserved]

Subpart T—Diesel-Powered Equipment

SOURCE: 61 FR 55527, Oct. 25, 1996, unless otherwise noted.

§ 75.1900 Definitions.

The following definitions apply in this subpart.

Diesel fuel tank. A closed metal vessel specifically designed for the storage or transport of diesel fuel.

Diesel fuel transportation unit. A self-propelled or portable wheeled vehicle used to transport a diesel fuel tank.

Noncombustible material. A material that will continue to serve its intended function for 1 hour when subjected to a fire test incorporating an ASTM E119–88 time/temperature heat input, or equivalent. The publication ASTM E119–88 ''Standard Test Methods for Fire Tests of Building Construction and Materials'' is incorporated by reference and may be inspected at any MSHA Coal Mine Safety and Health district office; at MSHA's Office of Standards, Regulations, and Variances, 1100 Wilson Blvd., Room 2352, Arlington, Virginia 22209–3939; or at the National Archives and Records Administration (NARA). For information on the availability of this material at NARA, call 202–741–6030, or go to: *http://www.archives.gov/federal_register/code_of_federal_regulations/ibr_locations.html.* This incorporation by reference was approved by the Director of the Federal Register in accordance with 5 U.S.C. 552(a) and 1 CFR part 51. In addition, copies of the document may be purchased from the American Society for Testing Materials (ASTM), 100 Barr Harbor Drive, P.O. Box C700, West Conshohocken, PA, 19428–2959, *http://www.astm.org.*

Permanent underground diesel fuel storage facility. A facility designed and constructed to remain at one location for the storage or dispensing of diesel fuel, which does not move as mining progresses.

Safety can. A metal container intended for storage, transport or dispensing of diesel fuel, with a nominal capacity of 5 gallons, listed or approved by a nationally recognized independent testing laboratory.

Temporary underground diesel fuel storage area. An area of the mine provided for the short-term storage of diesel fuel in a fuel transportation unit, which moves as mining progresses.

[35 FR 17890, Nov. 20, 1970, as amended at 67 FR 38386, June 4, 2002; 71 FR 16669, Apr. 3, 2006]

§ 75.1901 Diesel fuel requirements.

(a) Diesel-powered equipment shall be used underground only with a diesel fuel having a sulfur content no greater than 0.05 percent and a flash point of 100 °F (38 °C) or greater. Upon request, the mine operator shall provide to an authorized representative of the Secretary evidence that the diesel fuel purchased for use in diesel-powered equipment underground meets these requirements.

(b) Flammable liquids shall not be added to diesel fuel used in diesel-powered equipment underground.

(c) Only diesel fuel additives that have been registered by the Environmental Protection Agency may be used in diesel-powered equipment underground.

§ 75.1902 Underground diesel fuel storage—general requirements.

(a) All diesel fuel must be stored in:

(1) Diesel fuel tanks in permanent underground diesel fuel storage facilities;

(2) Diesel fuel tanks on diesel fuel transportation units in permanent underground diesel fuel storage facilities

or in temporary underground fuel storage areas; or

(3) Safety cans.

(b) The total capacity of stationary diesel fuel tanks in permanent underground diesel fuel storage facilities must not exceed 1000 gallons.

(c)(1) Only one temporary underground diesel fuel storage area is permitted for each working section or in each area of the mine where equipment is being installed or removed.

(2) The temporary underground diesel fuel storage area must be located—

(i) Within 500 feet of the loading point;

(ii) Within 500 feet of the projected loading point where equipment is being installed; or

(iii) Within 500 feet of the last loading point where equipment is being removed.

(3) No more than one diesel fuel transportation unit at a time shall be parked in the temporary underground diesel fuel storage area.

(d) Permanent underground diesel fuel storage facilities and temporary underground diesel fuel storage areas must be—

(1) At least 100 feet from shafts, slopes, shops, or explosives magazines;

(2) At least 25 feet from trolley wires or power cables, or electric equipment not necessary for the operation of the storage facilities or areas; and

(3) In a location that is protected from damage by other mobile equipment.

(e) Permanent underground diesel fuel storage facilities must not be located within the primary escapeway.

§ 75.1903 Underground diesel fuel storage facilities and areas; construction and safety precautions.

(a) Permanent underground diesel fuel storage facilities must be—

(1) Constructed of noncombustible materials, including floors, roofs, roof supports, doors, and door frames. Exposed coal within fuel storage areas must be covered with noncombustible materials. If bulkheads are used they must be tightly sealed and must be built of or covered with noncombustible materials;

(2) Provided with either self-closing doors or a means for automatic enclosure;

(3) Provided with a means for personnel to enter and exit the facility after closure;

(4) Ventilated with intake air that is coursed into a return air course or to the surface and that is not used to ventilate working places, using ventilation controls meeting the requirements of § 75.333(e);

(5) Equipped with an automatic fire suppression system that meets the requirements of § 75.1912. Actuation of the automatic fire suppression system shall initiate the means for automatic enclosure;

(6) Provided with a means of containment capable of holding 150 percent of the maximum capacity of the fuel storage system; and

(7) Provided with a competent concrete floor or equivalent to prevent fuel spills from saturating the mine floor.

(b) Permanent underground diesel fuel storage facilities and temporary underground diesel fuel storage areas must be—

(1) Equipped with at least 240 pounds of rock dust and provided with two portable multipurpose dry chemical type (ABC) fire extinguishers that are listed or approved by a nationally recognized independent testing laboratory and have a 10A:60B:C or higher rating. Both fire extinguishers must be easily accessible to personnel, and at least one fire extinguisher must be located outside of the storage facility or area upwind of the facility, in intake air; or

(2) Provided with three portable multipurpose dry chemical type (ABC) fire extinguishers that are listed or approved by a nationally recognized independent testing laboratory and have a 10A:60B:C or higher rating. All fire extinguishers must be easily accessible to personnel, and at least one fire extinguisher must be located outside of the storage facility or area upwind of the facility, in intake air.

(3) Identified with conspicuous markings designating diesel fuel storage; and

(4) Maintained to prevent the accumulation of water.

(c) Welding or cutting other than that performed in accordance with paragraph (d) of this section shall not be performed within 50 feet of a permanent underground diesel fuel storage facility or a temporary underground diesel fuel storage area.

(d) When it is necessary to weld, cut, or solder pipelines, tanks, or other containers that may have contained diesel fuel, these practices shall be followed:

(1) Cutting or welding shall not be performed on or within pipelines, tanks, or other containers that have contained diesel fuel until they have been thoroughly purged and cleaned or inerted and a vent or opening is provided to allow for sufficient release of any buildup pressure before heat is applied.

(2) Diesel fuel shall not be allowed to enter pipelines, tanks, or containers that have been welded, soldered, brazed, or cut until the metal has cooled to ambient temperature.

§ 75.1904 Underground diesel fuel tanks and safety cans.

(a) Diesel fuel tanks used underground shall—

(1) Have steel walls of a minimum 3/16-inch thickness, or walls made of other metal of a thickness that provides equivalent strength;

(2) Be protected from corrosion;

(3) Be of seamless construction or have liquid tight welded seams;

(4) Not leak; and

(5) For stationary tanks in permanent underground diesel fuel storage facilities, be placed on supports constructed of noncombustible material so that the tanks are at least 12 inches above the floor.

(b) Underground diesel fuel tanks must be provided with—

(1) Devices for emergency venting designed to open at a pressure not to exceed 2.5 psi according to the following—

(i) Tanks with a capacity greater than 500 gallons must have an emergency venting device whose area is equivalent to a pipe with a nominal inside diameter of 5 inches or greater; and

(ii) Tanks with a capacity of 500 gallons or less must have an emergency venting device whose area is equivalent to a pipe with a nominal inside diameter of 4 inches or greater.

(2) Tethered or self-closing caps for stationary tanks in permanent underground diesel fuel storage facilities and self-closing caps for diesel fuel tanks on diesel fuel transportation units;

(3) Vents to permit the free discharge of liquid, at least as large as the fill or withdrawal connection, whichever is larger, but not less than 1¼ inch nominal inside diameter;

(4) Liquid tight connections for all tank openings that are—

(i) Identified by conspicuous markings that specify the function; and

(ii) Closed when not in use.

(5) Vent pipes that drain toward the tank without sagging and are higher than the fill pipe opening;

(6) Shutoff valves located as close as practicable to the tank shell on each connection through which liquid can normally flow; and

(7) An automatic closing, heat-actuated valve on each withdrawal connection below the liquid level.

(c) When tanks are provided with openings for manual gauging, liquid tight, tethered or self-closing caps or covers must be provided and must be kept closed when not open for gauging.

(d) Surfaces of the tank and its associated components must be protected against damage by collision.

(e) Before being placed in service, tanks and their associated components must be tested for leakage at a pressure equal to the working pressure, except tanks and components connected directly to piping systems, which must be properly designed for the application.

(f) Safety cans must be:

(1) Limited to a nominal capacity of 5 gallons or less;

(2) Equipped with a flexible or rigid tubular nozzle attached to a valved spout;

(3) Provided with a vent valve designed to open and close simultaneously and automatically with the opening and closing of the pouring valve; and

(4) Designed so that they will safely relieve internal pressure when exposed to fire.

§ 75.1905 Dispensing of diesel fuel.

(a) Diesel-powered equipment in underground coal mines may be refueled only from safety cans, from tanks on diesel fuel transportation units, or from stationary tanks.

(b) Fuel that is dispensed from other than safety cans must be dispensed by means of—

(1) Gravity feed with a hose equipped with a nozzle with a self-closing valve and no latch-open device;

(2) A manual pump with a hose equipped with a nozzle containing a self-closing valve; or

(3) A powered pump with:

(i) An accessible emergency shutoff switch for each nozzle;

(ii) A hose equipped with a self-closing valve and no latch-open device; and

(iii) An anti-siphoning device.

(c) Diesel fuel must not be dispensed using compressed gas.

(d) Diesel fuel must not be dispensed to the fuel tank of diesel-powered equipment while the equipment engine is running.

(e) Powered pumps shall be shut off when fuel is not being dispensed.

§ 75.1905–1 Diesel fuel piping systems.

(a) Diesel fuel piping systems from the surface must be designed and operated as dry systems, unless an automatic shutdown is incorporated that prevents accidental loss or spillage of fuel and that activates an alarm system.

(b) All piping, valves and fittings must be—

(1) Capable of withstanding working pressures and stresses;

(2) Capable of withstanding four times the static pressures;

(3) Compatible with diesel fuel; and

(4) Maintained in a manner that prevents leakage.

(c) Pipelines must have manual shutoff valves installed at the surface filling point, and at the underground discharge point.

(d) If diesel fuel lines are not buried in the ground sufficiently to protect them from damage, shutoff valves must be located every 300 feet.

(e) Shutoff valves must be installed at each branch line where the branch line joins the main line.

(f) An automatic means must be provided to prevent unintentional transfer of diesel fuel from the surface into the permanent underground diesel fuel storage facility.

(g) Diesel fuel piping systems from the surface shall only be used to transport diesel fuel directly to stationary tanks or diesel fuel transportation units in a permanent underground diesel fuel storage facility.

(h) The diesel fuel piping system must not be located in a borehole with electric power cables.

(i) Diesel fuel piping systems located in entries must not be located on the same side of the entry as electric cables or power lines. Where it is necessary for piping systems to cross electric cables or power lines, guarding must be provided to prevent severed electrical cables or power lines near broken fuel lines.

(j) Diesel fuel piping systems must be protected and located to prevent physical damage.

§ 75.1906 Transport of diesel fuel.

(a) Diesel fuel shall be transported only by diesel fuel transportation units or in safety cans.

(b) No more than one safety can shall be transported on a vehicle at any time. The can must be protected from damage during transport. All other safety cans must be stored in permanent underground diesel fuel storage facilities.

(c) Safety cans that leak must be promptly removed from the mine.

(d) Diesel fuel transportation unit tanks and safety cans must be conspicuously marked as containing diesel fuel.

(e) Diesel fuel transportation units must transport no more than 500 gallons of diesel fuel at a time.

(f) Tanks on diesel fuel transportation units must be permanently fixed to the unit and have a total capacity of no greater than 500 gallons of diesel fuel.

(g) Non-self-propelled diesel fuel transportation units with electrical components for dispensing fuel that are connected to a source of electrical

power must be protected by a fire suppression device that meets the requirements of §§ 75.1107–3 through 75.1107–6, and §§ 75.1107–8 through 75.1107–16.

(h) Diesel fuel transportation units and vehicles transporting safety cans containing diesel fuel must have at least two multipurpose, dry chemical type (ABC) fire extinguishers, listed or approved by a nationally recognized independent testing laboratory and having a 10A:60B:C or higher rating, with one fire extinguisher provided on each side of the vehicle.

(i) Diesel fuel transportation units shall be parked only in permanent underground diesel fuel storage facilities or temporary underground diesel fuel storage areas when not in use.

(j) When the distance between a diesel fuel transportation unit and an energized trolley wire at any location is less than 12 inches, the requirements of § 75.1003–2 must be followed.

(k) Diesel fuel shall not be transported on or with mantrips or on conveyor belts.

(l) Diesel fuel shall be stored and handled in accordance with the requirements of §§ 75.1902 through 75.1906 of this part as of November 25, 1997.

[61 FR 55527, Oct. 25, 1996, as amended at 63 FR 12647, Mar. 16, 1998]

§ 75.1907 Diesel-powered equipment intended for use in underground coal mines.

(a) As of November 25, 1996 all diesel-powered equipment used where permissible electrical equipment is required must be approved under part 36 of this chapter.

(b) Diesel-powered equipment approved under part 36 of this chapter must be provided with additional safety features in accordance with the following time schedule:

(1) As of April 25, 1997 the equipment must have a safety component system that limits surface temperatures to those specified in subpart F of part 7 of this title;

(2) As of November 25, 1999 the equipment must have an automatic or manual fire suppression system that meets the requirements of § 75.1911 of this part, and at least one portable multipurpose dry chemical type (ABC) fire extinguisher, listed or approved by a nationally recognized independent testing laboratory and having a 10A:60B:C or higher rating. The fire extinguisher must be located within easy reach of the equipment operator and be protected from damage by collision.

(3) As of November 25, 1999 the equipment must have a brake system that meets the requirements of § 75.1909 (b)(6), (b)(7), (b)(8), (c), (d), and (e);

(4) As of November 25, 1997 a particulate index and dilution air quantity shall be determined for the equipment in accordance with subpart E of part 7 of this chapter; and

(5) Permissible diesel-powered equipment manufactured on or after November 25, 1999 and that is used in an underground coal mine shall incorporate a power package approved in accordance with part 7, subpart F of this chapter.

(c) As of November 25, 1999 nonpermissible diesel-powered equipment, except the special category of equipment under § 75.1908(d), shall meet the requirements of §§ 75.1909 and 75.1910 of this part.

§ 75.1908 Nonpermissible diesel-powered equipment; categories.

(a) Heavy-duty diesel-powered equipment includes—

(1) Equipment that cuts or moves rock or coal;

(2) Equipment that performs drilling or bolting functions;

(3) Equipment that moves longwall components;

(4) Self-propelled diesel fuel transportation units and self-propelled lube units; or

(5) Machines used to transport portable diesel fuel transportation units or portable lube units.

(b) Light-duty diesel-powered equipment is any diesel-powered equipment that does not meet the criteria of paragraph (a).

(c) For the purposes of this subpart, the following equipment is considered attended:

(1) Any machine or device operated by a miner; or

(2) Any machine or device that is mounted in the direct line of sight of a job site located within 500 feet of such machine or device, which job site is occupied by a miner.

(d) Diesel-powered ambulances and fire fighting equipment are a special category of equipment that may be used underground only in accordance with the mine fire fighting and evacuation plan under § 75.1502.

[61 FR 55527, Oct. 25, 1996; 70 FR 36347, June 23, 2005]

§ 75.1909 Nonpermissible diesel-powered equipment; design and performance requirements.

(a) Nonpermissible diesel-powered equipment, except for the special category of equipment under § 75.1908(d), must be equipped with the following features:

(1) An engine approved under subpart E of part 7 of this title equipped with an air filter sized in accordance with the engine manufacturer's recommendations, and an air filter service indicator set in accordance with the engine manufacturer's recommendations;

(2) At least one portable multipurpose dry chemical type (ABC) fire extinguisher listed or approved by a nationally recognized independent testing laboratory with a 10A:60B:C or higher rating. The fire extinguisher must be located within easy reach of the equipment operator and protected from damage;

(3) A fuel system specifically designed for diesel fuel meeting the following requirements:

(i) A fuel tank and fuel lines that do not leak;

(ii) A fuel tank that is substantially constructed and protected against damage by collision;

(iii) A vent opening that maintains atmospheric pressure in the fuel tank, and that is designed to prevent fuel from splashing out of the vent opening;

(iv) A self-closing filler cap on the fuel tank;

(v) The fuel tank, filler and vent must be located so that leaks or spillage during refueling will not contact hot surfaces;

(vi) Fuel line piping must be either steel-wire reinforced; synthetic elastomer-covered hose suitable for use with diesel fuel that has been tested and has been determined to be fire-resistant by the manufacturer; or metal;

(vii) Fuel line piping must be clamped;

(viii) Primary fuel lines must be located so that fuel line leaks do not contact hot surfaces;

(ix) The fuel lines must be separated from electrical wiring and protected from damage in ordinary use;

(x) A manual shutoff valve must be installed in the fuel system as close as practicable to the tank; and

(xi) A water separator and fuel filter(s) must be provided.

(4) A sensor to monitor the temperature and provide a visual warning of an overheated cylinder head on air-cooled engines;

(5) Guarding to protect fuel, hydraulic, and electric lines when such lines pass near rotating parts or in the event of shaft failure;

(6) Hydraulic tanks, fillers, vents, and lines located to prevent spillage or leaks from contacting hot surfaces;

(7) Reflectors or warning lights mounted on the equipment which can be readily seen in all directions;

(8) A means to direct exhaust gas away from the equipment operator, persons on board the machine, and combustible machine components;

(9) A means to prevent unintentional free and uncontrolled descent of personnel-elevating work platforms; and

(10) A means to prevent the spray from ruptured hydraulic or lubricating oil lines from being ignited by contact with engine exhaust system component surfaces.

(b) Self-propelled nonpermissible diesel-powered equipment must have the following features in addition to those in paragraph (a):

(1) A means to ensure that no stored hydraulic energy that will cause machine articulation is available after the engine is shut down;

(2) A neutral start feature which ensures that engine cranking torque will not be transmitted through the powertrain and cause machine movement on vehicles utilizing fluid power transmissions;

(3) For machines with steering wheels, brake pedals, and accelerator pedals, controls which are of automobile orientation;

(4) An audible warning device conveniently located near the equipment operator;

(5) Lights provided and maintained on both ends of the equipment. Equipment normally operated in both directions must be equipped with headlights for both directions;

(6) Service brakes that act on each wheel of the vehicle and that are designed such that failure of any single component, except the brake actuation pedal or other similar actuation device, must not result in a complete loss of service braking capability;

(7) Service brakes that safely bring the fully loaded vehicle to a complete stop on the maximum grade on which it is operated; and

(8) No device that traps a column of fluid to hold the brake in the applied position shall be installed in any brake system, unless the trapped column of fluid is released when the equipment operator is no longer in contact with the brake activation device.

(c) Self-propelled nonpermissible heavy-duty diesel-powered equipment under §75.1908(a), except rail-mounted equipment, shall be provided with a supplemental braking system that:

(1) Engages automatically within 5 seconds of the shutdown of the engine;

(2) Safely brings the equipment when fully loaded to a complete stop on the maximum grade on which it is operated;

(3) Holds the equipment stationary, despite any contraction of brake parts, exhaustion of any nonmechanical source of energy, or leakage;

(4) Releases only by a manual control that does not operate any other equipment function;

(5) Has a means in the equipment operator's compartment to apply the brakes manually without shutting down the engine, and a means to release and reengage the brakes without the engine operating; and

(6) Has a means to ensure that the supplemental braking system is released before the equipment can be trammed, and is designed to ensure the brake is fully released at all times while the equipment is trammed.

(d) Self-propelled nonpermissible light-duty diesel-powered equipment under §75.1908(b), except rail-mounted equipment, must be provided with a parking brake that holds the fully loaded equipment stationary on the maximum grade on which it is operated despite any contraction of the brake parts, exhaustion of any nonmechanical source of energy, or leakage.

(e) The supplemental and park brake systems required by paragraphs (c) and (d) must be applied when the equipment operator is not at the controls of the equipment, except during movement of disabled equipment.

(f) Self-propelled personnel-elevating work platforms must be provided with a means to ensure that the parking braking system is released before the equipment can be trammed, and must be designed to ensure the brake is fully released at all times while the equipment is trammed.

(g) Any nonpermissible equipment that discharges its exhaust directly into a return air course must be provided with a power package approved under subpart F of part 7 of this title.

(h) Self-propelled nonpermissible heavy-duty diesel-powered equipment meeting the requirements of §75.1908(a) must be provided with an automatic fire suppression system meeting the requirements of §75.1911.

(i) Self-propelled nonpermissible light-duty diesel-powered equipment meeting the requirements of §75.1908(b) must be provided with an automatic or manual fire suppression system meeting the requirements of §75.1911.

(j) Nonpermissible equipment that is not self-propelled must have the following features in addition to those listed in paragraph (a):

(1) A means to prevent inadvertent movement of the equipment when parked;

(2) Safety chains or other suitable secondary connections on equipment that is being towed; and

(3) An automatic fire suppression system meeting the requirements of §75.1911.

[61 FR 55527, Oct. 25, 1996; 62 FR 34641, June 27, 1997]

§ 75.1910 Nonpermissible diesel-powered equipment; electrical system design and performance requirements.

Electrical circuits and components associated with or connected to electrical systems on nonpermissible diesel-powered equipment utilizing storage batteries and integral charging systems, except for the special category of equipment under § 75.1908(d), must conform to the following requirements:

(a) Overload and short circuit protection must be provided for electric circuits and components in accordance with §§ 75.518 and 75.518–1 of this part;

(b) Each electric conductor from the battery to the starting motor must be protected against short circuit by fuses or other circuit-interrupting devices placed as near as practicable to the battery terminals;

(c) Each branch circuit conductor connected to the main circuit between the battery and charging generator must be protected against short circuit by fuses or other automatic circuit-interrupting devices;

(d) The electrical system shall be equipped with a circuit-interrupting device by means of which all power conductors can be deenergized. The device must be located as close as practicable to the battery terminals and be designed to operate within its electrical rating without damage. The device shall not automatically reset after being actuated. All magnetic circuit-interrupting devices must be mounted in a manner to preclude their closing by force of gravity;

(e) Each motor and charging generator must be protected by an automatic overcurrent device. One protective device will be acceptable when two motors of the same rating operate simultaneously and perform virtually the same duty;

(f) Each ungrounded conductor must have insulation compatible with the impressed voltage. Insulation materials must be resistant to deterioration from engine heat and oil. Electric conductors must meet the applicable requirements of §§ 75.513 and 75.513–1, except electric conductors for starting motors, which must only meet the requirements of § 75.513;

(g) All wiring must have adequate mechanical protection to prevent damage to the cable that might result in short circuits;

(h) Sharp edges and corners must be removed at all points where there is a possibility of damaging wires, cables, or conduits by cutting or abrasion. The insulation of the cables within a battery box must be protected against abrasion;

(i) When insulated wires other than cables pass through metal frames, the holes must be substantially bushed with insulated bushings. Cables must enter metal frames of motors, splice boxes, and electric components only through proper fittings. All electrical connections and splices must be mechanically and electrically efficient, and suitable connectors shall be used. All electrical connectors or splices in insulated wire must be reinsulated at least to the same degree of protection as the remainder of the wire;

(j) The battery must be secured to prevent movement, and must be protected from external damage by position. Batteries that are not protected from external damage by position must be enclosed in a battery box. Flame-resistant insulation treated to resist chemical reaction to electrolyte must be provided on battery connections to prevent battery terminals from contacting conducting surfaces;

(k) A battery box, including the cover, must be constructed of steel with a minimum thickness of ⅛ inch, or of a material other than steel that provides equivalent strength;

(l) Battery-box covers must be lined with a flame-resistant insulating material permanently attached to the underside of the cover, unless equivalent protection is provided. Battery-box covers must be provided with a means for securing them in closed position. At least ½ inch of air space must be provided between the underside of the cover and the top of the battery, including terminals;

(m) Battery boxes must be provided with ventilation openings to prevent the accumulation of flammable or toxic gases or vapors within the battery box. The size and locations of openings for ventilation must prevent direct access to battery terminals;

(n) The battery must be insulated from the battery-box walls and supported on insulating materials. Insulating materials that may be subject to chemical reaction with electrolyte must be treated to resist such action; and

(o) Drainage holes must be provided in the bottom of each battery box.

§ 75.1911 Fire suppression systems for diesel-powered equipment and fuel transportation units.

(a) The fire suppression system required by §§ 75.1907 and 75.1909 shall be a multipurpose dry chemical type (ABC) fire suppression system listed or approved by a nationally recognized independent testing laboratory and appropriate for installation on diesel-powered equipment and fuel transportation units.

(1) The system shall be installed in accordance with the manufacturer's specifications and the limitations of the listing or approval.

(2) The system shall be installed in a protected location or guarded to minimize physical damage from routine vehicle operations.

(3) Suppressant agent distribution tubing or piping shall be secured and protected against damage, including pinching, crimping, stretching, abrasion, and corrosion.

(4) Discharge nozzles shall be positioned and aimed for maximum fire suppression effectiveness. Nozzles shall also be protected against the entrance of foreign materials such as mud, coal dust, or rock dust.

(b) The fire suppression system shall provide fire suppression and, if automatic, fire detection for the engine including the starter, transmission, hydraulic pumps and tanks, fuel tanks, exposed brake units, air compressors and battery areas on diesel-powered equipment and electric panels or controls used on fuel transportation units and other areas as necessary.

(c) If automatic, the fire suppression system shall include audible and visual alarms to warn of fires or system faults.

(d) The fire suppression system shall provide for automatic engine shutdown. If the fire suppression system is automatic, engine shutdown and discharge of suppressant agent may be delayed for a maximum of 15 seconds after the fire is detected by the system.

(e) The fire suppression system shall be operable by at least two manual actuators. One actuator shall be located on each side of the equipment. If the equipment is provided with an operator's compartment, one of the manual actuators shall be located in the compartment within reach of the operator.

(f) The fire suppression system shall remain operative in the event of engine shutdown, equipment electrical system failure, or failure of any other equipment system.

(g) The electrical components of each fire suppression system installed on equipment used where permissible electric equipment is required shall be permissible or intrinsically safe and such components shall be maintained in permissible or intrinsically safe condition.

(h) Electrically operated detection and actuation circuits shall be monitored and provided with status indicators showing power and circuit continuity. If the system is not electrically operated, a means shall be provided to indicate the functional readiness status of the detection system.

(i) Each fire suppression system shall be tested and maintained in accordance with the manufacturer's recommended inspection and maintenance program and as required by the nationally recognized independent testing laboratory listing or approval, and be visually inspected at least once each week by a person trained to make such inspections.

(j) *Recordkeeping*. Persons performing inspections and tests of fire suppression systems under paragraph (i) shall record when a fire suppression system does not meet the installation or maintenance requirements of this section.

(1) The record shall include the equipment on which the fire suppression system did not meet the installation or maintenance requirements of this section, the defect found, and the corrective action taken.

(2) Records are to be kept manually in a secure manner not susceptible to alteration or recorded electronically in a secured computer system that is not susceptible to alteration.

(3) Records shall be maintained at a surface location at the mine for one year and made available for inspection by an authorized representative of the Secretary and miners' representatives.

(k) All miners normally assigned to the active workings of the mine shall be instructed about the hazards inherent to the operation of the fire suppression systems and, where appropriate, the safeguards available for each system.

(l) For purposes of § 75.380(f), a fire suppression system installed on diesel-powered equipment and meeting the requirements of this section is equivalent to a fire suppression system meeting the requirements of §§ 75.1107–3 through 75.1107–16.

§ 75.1912 Fire suppression systems for permanent underground diesel fuel storage facilities.

(a) The fire suppression system required by § 75.1903 shall be an automatic multipurpose dry chemical type (ABC) fire suppression system listed or approved as an engineered dry chemical extinguishing system by a nationally recognized independent testing laboratory and appropriate for installation at a permanent underground diesel fuel storage facility.

(1) Alternate types of fire suppression systems shall be approved in accordance with § 75.1107–13 of this part.

(2) The system shall be installed in accordance with the manufacturer's specifications and the limitations of the listing or approval.

(3) The system shall be installed in a protected location or guarded to prevent physical damage from routine operations.

(4) Suppressant agent distribution tubing or piping shall be secured and protected against damage, including pinching, crimping, stretching, abrasion, and corrosion.

(5) Discharge nozzles shall be positioned and aimed for maximum fire suppression effectiveness in the protected areas. Nozzles must also be protected against the entrance of foreign materials such as mud, coal dust, and rock dust.

(b) The fire suppression system shall provide automatic fire detection and automatic fire suppression for all areas within the facility.

(c) Audible and visual alarms to warn of fire or system faults shall be provided at the protected area and at a surface location which is continually monitored by a person when personnel are underground. In the event of a fire, personnel shall be warned in accordance with the provisions set forth in § 75.1502.

(d) The fire suppression system shall deenergize all power to the diesel fuel storage facility when actuated except that required for automatic enclosure and alarms.

(e) Fire suppression systems shall include two manual actuators located as follows:

(1) At least one within the fuel storage facility; and

(2) At least one a safe distance away from the storage facility and located in intake air, upwind of the storage facility.

(f) The fire suppression system shall remain operational in the event of electrical system failure.

(g) Electrically operated detection and actuation circuits shall be monitored and provided with status indicators showing power and circuit continuity. If the system is not electrically operated, a means shall be provided to indicate the functional readiness status of the detection system.

(h) Each fire suppression system shall be tested and maintained in accordance with the manufacturer's recommended inspection and maintenance program and as required by the nationally recognized independent testing laboratory listing or approval, and be visually inspected at least once each week by a person trained to make such inspections.

(i) *Recordkeeping*. Persons performing inspections and tests of fire suppression systems under paragraph (h) shall record when a fire suppression system does not meet the installation or maintenance requirements of this section.

(1) The record shall include the facility whose fire suppression system did not meet the installation or maintenance requirements of this section, the defect found, and the corrective action taken.

(2) Records are to be kept manually in a secure manner not susceptible to alteration or recorded electronically in a secured computer system that is not susceptible to alteration.

(3) Records shall be maintained at a surface location at the mine for one year and made available for inspection by an authorized representative of the Secretary and miners' representatives.

(j) All miners normally assigned to the active workings of the mine shall be instructed about the hazards inherent to the operation of the fire suppression systems and, where appropriate, the safeguards available for each system.

[61 FR 55527, Oct. 25, 1996; 70 FR 36347, June 23, 2005]

§ 75.1913 Starting aids.

(a) Volatile fuel starting aids shall be used in accordance with recommendations provided by the starting aid manufacturer, the engine manufacturer, and the machine manufacturer.

(b) Containers of volatile fuel starting aids shall be conspicuously marked to indicate the contents. When not in use, containers of volatile fuel starting aids shall be stored in metal enclosures that are used only for storage of starting aids. Such metal enclosures must be conspicuously marked, secured, and protected from damage.

(c) Volatile fuel starting aids shall not be:

(1) Taken into or used in areas where permissible equipment is required;

(2) Used in the presence of open flames or burning flame safety lamps, or when welding or cutting is taking place; or

(3) Used in any area where 1.0 percent or greater concentration of methane is present.

(d) Compressed oxygen or compressed flammable gases shall not be connected to diesel air-start systems.

§ 75.1914 Maintenance of diesel-powered equipment.

(a) Diesel-powered equipment shall be maintained in approved and safe condition or removed from service.

(b) Maintenance and repairs of approved features and those features required by §§ 75.1909 and 75.1910 on diesel-powered equipment shall be made only by a person qualified under § 75.1915.

(c) The water scrubber system on diesel-powered equipment shall be drained and flushed, by a person who is trained to perform this task, at least once on each shift in which the equipment is operated.

(d) The intake air filter on diesel-powered equipment shall be replaced or serviced, by a person who is trained to perform this task, when the intake air pressure drop device so indicates or when the engine manufacturer's maximum allowable air pressure drop level is exceeded.

(e) Mobile diesel-powered equipment that is to be used during a shift shall be visually examined by the equipment operator before being placed in operation. Equipment defects affecting safety shall be reported promptly to the mine operator.

(f) All diesel-powered equipment shall be examined and tested weekly by a person qualified under § 75.1915.

(1) Examinations and tests shall be conducted in accordance with approved checklists and manufacturers' maintenance manuals.

(2) Persons performing weekly examinations and tests of diesel-powered equipment under this paragraph shall make a record when the equipment is not in approved or safe condition. The record shall include the equipment that is not in approved or safe condition, the defect found, and the corrective action taken.

(g) Undiluted exhaust emissions of diesel engines in diesel-powered equipment approved under part 36 and heavy-duty nonpermissible diesel-powered equipment as defined in § 75.1908(a) in use in underground coal mines shall be tested and evaluated weekly by a person who is trained to perform this task. The mine operator shall develop and implement written standard operating procedures for such testing and evaluation that specify the following:

(1) The method of achieving a repeatable loaded engine operating condition for each type of equipment;

(2) Sampling and analytical methods (including calibration of instrumentation) that are capable of accurately detecting carbon monoxide in the expected concentrations;

(3) The method of evaluation and interpretation of the results;

(4) The concentration or changes in concentration of carbon monoxide that will indicate a change in engine performance. Carbon monoxide concentration shall not exceed 2500 parts per million; and

(5) The maintenance of records necessary to track engine performance.

(h) *Recordkeeping*. Records required by paragraphs (f)(2) and (g)(5) shall be—

(1) Recorded in a secure book that is not susceptible to alteration, or recorded electronically in a computer system that is secure and not susceptible to alteration; and

(2) Retained at a surface location at the mine for at least 1 year and made available for inspection by an authorized representative of the Secretary and by miners' representatives.

(i) Diesel-powered equipment must be maintained in accordance with this part as of November 25, 1997.

§ 75.1915 Training and qualification of persons working on diesel-powered equipment.

(a) To be qualified to perform maintenance, repairs, examinations and tests on diesel-powered equipment, as required by § 75.1914, a person must successfully complete a training and qualification program that meets the requirements of this section. A person qualified to perform these tasks shall be retrained as necessary to maintain the ability to perform all assigned diesel-powered equipment maintenance, repairs, examinations and tests.

(b) A training and qualification program under this section must:

(1) Be presented by a competent instructor;

(2) Be sufficient to prepare or update a person's ability to perform all assigned tasks with respect to diesel-powered equipment maintenance, repairs, examinations and tests;

(3) Address, at a minimum, the following:

(i) The requirements of subpart T of this part;

(ii) Use of appropriate power package or machine checklists to conduct tests to ensure that diesel-powered equipment is in approved and safe condition, with acceptable emission levels;

(iii) Proper maintenance of approved features and the correct use of the appropriate maintenance manuals, including machine adjustments, service, and assembly;

(iv) Diesel-powered equipment fire suppression system tests and maintenance;

(v) Fire and ignition sources and their control or elimination, including cleaning of the equipment;

(vi) Safe fueling procedures and maintenance of the fuel system of the equipment; and

(vii) Intake air system maintenance and tests.

(4) Include an examination that requires demonstration of the ability to perform all assigned tasks with respect to diesel-powered equipment maintenance, repairs, examinations and tests; and

(5) Be in writing. The written program shall include a description of the course content, materials, and teaching methods for initial training and retraining.

(c) *Recordkeeping*. The operator shall maintain a copy of the training and qualification program required by this section and a record of the names of all persons qualified under the program.

(1) The record of the names of qualified persons shall be made in a manner that is not susceptible to alteration, or recorded electronically in a computer system that is secure and not susceptible to alteration.

(2) The training and qualification program and record of qualified persons are to be kept at surface location of the mine and made available for inspection by an authorized representative of the Secretary and by miners' representatives.

§ 75.1916 Operation of diesel-powered equipment.

(a) Diesel-powered equipment shall be operated at a speed that is consistent with the type of equipment being operated, roadway conditions, grades, clearances, visibility, and other traffic.

(b) Operators of mobile diesel-powered equipment shall maintain full control of the equipment while it is in motion.

(c) Standardized traffic rules, including speed limits, signals and warning signs, shall be established at each mine and followed.

(d) Except as required in normal mining operations, mobile diesel-powered equipment shall not be idled.

(e) Diesel-powered equipment shall not be operated unattended.

PART 77—MANDATORY SAFETY STANDARDS, SURFACE COAL MINES AND SURFACE WORK AREAS OF UNDERGROUND COAL MINES

Subpart A—General

Sec.
77.1 Scope.
77.2 Definitions.

Subpart B—Qualified and Certified Persons

77.100 Certified person.
77.101 Tests for methane and for oxygen deficiency; qualified person.
77.102 Tests for methane; oxygen deficiency; qualified person, additional requirement.
77.103 Electrical work; qualified person.
77.104 Repair of energized surface high voltage lines; qualified person.
77.105 Qualified hoistman; slope or shaft sinking operation; qualifications.
77.106 Records of certified and qualified persons.
77.107 Training programs.
77.107–1 Plans for training programs.

Subpart C—Surface Installations

77.200 Surface installations; general.
77.201 Methane content in surface installations.
77.201–1 Tests for methane; qualified person; use of approved device.
77.201–2 Methane accumulations; change in ventilation.
77.202 Dust accumulations in surface installations.
77.203 Use of material or equipment overhead; safeguards.
77.204 Openings in surface installations; safeguards.
77.205 Travelways at surface installations.
77.206 Ladders; construction; installation and maintenance.
77.207 Illumination.
77.208 Storage of materials.
77.209 Surge and storage piles.
77.210 Hoisting of materials.
77.211 Draw-off tunnels; stockpiling and reclaiming operations; general.
77.211–1 Continuous methane monitoring device; installation and operation; automatic deenergization of electric equipment.
77.212 Draw-off tunnel ventilation fans; installation.
77.213 Draw-off tunnel escapeways.
77.214 Refuse piles; general.
77.215 Refuse piles, construction requirements.
77.215–1 Refuse piles; identification.
77.215–2 Refuse piles; reporting requirements.
77.215–3 Refuse piles; certification.
77.215–4 Refuse piles; abandonment.
77.216 Water, sediment, or slurry impoundments and impounding structures; general.
77.216–1 Water, sediment or slurry impoundments and impounding structures; identification.
77.216–2 Water, sediment, or slurry impoundments and impounding structures; minimum plan requirements; changes or modifications; certification.
77.216–3 Water, sediment, or slurry impoundments and impounding structures; inspection requirements; correction of hazards; program requirements.
77.216–4 Water, sediment or slurry impoundments and impounding structures; reporting requirements; certification.
77.216–5 Water, sediment or slurry impoundments and impounding structures; abandonment.
77.217 Definitions.

Subpart D—Thermal Dryers

77.300 Thermal dryers; general.
77.301 Dryer heating units; operation.
77.302 Bypass stacks.
77.303 Hot gas inlet chamber dropout doors.
77.304 Explosion release vents.
77.305 Access to drying chambers, hot gas inlet chambers and ductwork; installation and maintenance.
77.306 Fire protection.
77.307 Thermal dryers; location and installation; general.
77.308 Structures housing other facilities; use of partitions.
77.309 Visual check of system equipment.
77.309–1 Control stations; location.
77.310 Control panels.
77.311 Alarm devices.
77.312 Fail safe monitoring systems.
77.313 Wet-coal feedbins; low-level indicators.
77.314 Automatic temperature control instruments.
77.315 Thermal dryers; examination and inspection.

Subpart E—Safeguards for Mechanical Equipment

77.400 Mechanical equipment guards.