AUTHENTICATED
U.S. GOVERNMENT
INFORMATION
GPO

Title 33—Navigation and Navigable Waters

(This book contains parts 125 to 199)

Part

CHAPTER I—Coast Guard, Department of Homeland Security (Continued) 125

ABBREVIATIONS USED IN THIS CHAPTER:

BMC = *Chief Boatswains Mate*. CGFR = *Coast Guard Federal Register document number*. CG = *Coast Guard*. EM = *Electrician's Mate*. LS = *Lightship*. NC = *Flag hoist meaning, ''I am in distress and require immediate assistance.''* NCG = *Call letters for any Coast Guard Shore Radio Station*. OAN = *Aids to Navigation Division*. PTP = *Training and Procurement*. U.S.C.G. = *United States Coast Guard*.

CHAPTER I—COAST GUARD, DEPARTMENT OF HOMELAND SECURITY (CONTINUED)

SUBCHAPTER L—WATERFRONT FACILITIES

Part		*Page*
125	Identification credentials for persons requiring access to waterfront facilities or vessels	7
126	Handling of dangerous cargo at waterfront facilities	16
127	Waterfront facilities handling liquefied natural gas and liquefied hazardous gas	24
128	Security of passenger terminals	50

SUBCHAPTER M—MARINE POLLUTION FINANCIAL RESPONSIBILITY AND COMPENSATION

133	Oil spill liability trust fund; State access	54
135	Offshore oil pollution compensation fund	56
136	Oil spill liability trust fund; claims procedures; designation of source; and advertisement	64
137	Oil spill liability: Standards for conducting all appropriate inquiries under the innocent landowner defense	75
138	Financial responsibility for water pollution (vessels) and OPA 90 limits of liability (vessels and deepwater ports)	84

SUBCHAPTER N—OUTER CONTINENTAL SHELF ACTIVITIES

140	General	100
141	Personnel	107
142	Workplace safety and health	111
143	Design and equipment	113
144	Lifesaving appliances	117
145	Fire-fighting equipment	121
146	Operations	122
147	Safety zones	134

SUBCHAPTER NN—DEEPWATER PORTS

148	Deepwater ports: General	144

Part		Page
149	Deepwater ports: Design, construction, and equipment	174
150	Deepwater ports: Operations	197

SUBCHAPTER O—POLLUTION

151	Vessels carrying oil, noxious liquid substances, garbage, municipal or commercial waste, and ballast water	227
153	Control of pollution by oil and hazardous substances, discharge removal	284
154	Facilities transferring oil or hazardous material in bulk	291
155	Oil or hazardous material pollution prevention regulations for vessels	391
156	Oil and hazardous material transfer operations	489
157	Rules for the protection of the marine environment relating to tank vessels carrying oil in bulk	502
158	Reception facilities for oil, noxious liquid substances, and garbage	564
159	Marine sanitation devices	575

SUBCHAPTER P—PORTS AND WATERWAYS SAFETY

160	Ports and waterways safety—general	593
161	Vessel traffic management	604
162	Inland waterways navigation regulations	622
163	Towing of barges	645
164	Navigation safety regulations	645
165	Regulated navigation areas and limited access areas	669
166	Shipping safety fairways	982
167	Offshore traffic separation schemes	994
168	Escort requirements for certain tankers	1017
169	Ship reporting systems	1019

SUBCHAPTERS Q–R [RESERVED]

SUBCHAPTER S—BOATING SAFETY

173	Vessel numbering and casualty and accident reporting	1026
174	State numbering and casualty reporting systems	1034
175	Equipment requirements	1040
177	Correction of especially hazardous conditions	1045
179	Defect notification	1047
181	Manufacturer requirements	1049
183	Boats and associated equipment	1054
184–186	[Reserved]	

Coast Guard, DHS

Part		*Page*
187	Vessel identification system	1088
188–199	[Reserved]	

SUBCHAPTER L—WATERFRONT FACILITIES

PART 125—IDENTIFICATION CREDENTIALS FOR PERSONS REQUIRING ACCESS TO WATERFRONT FACILITIES OR VESSELS

Sec.
125.01 Commandant.
125.03 District Commander.
125.05 Captain of the Port.
125.06 Western rivers.
125.07 Waterfront facility.
125.08 Great Lakes.
125.09 Identification credentials.
125.11 Form of Coast Guard Port Security Card.
125.12 Period of validity of Coast Guard Port Security Cards.
125.13 Captain of the Port Identification Cards.
125.15 Access to waterfront facilities, and port and harbor areas, including vessels and harbor craft therein.
125.17 Persons eligible for Coast Guard Port Security Cards.
125.19 Standards.
125.21 Applications.
125.23 United States citizens.
125.25 Aliens.
125.27 Sponsorship of applicant.
125.29 Insufficient information.
125.31 Approval of applicant by Commandant.
125.33 Holders of Coast Guard Port Security Cards.
125.35 Notice by Commandant.
125.37 Hearing Boards.
125.39 Notice by Hearing Board.
125.41 Challenges.
125.43 Hearing procedure.
125.45 Action by Commandant.
125.47 Appeals.
125.49 Action by Commandant after appeal.
125.51 Replacement of lost Coast Guard Port Security Card.
125.53 Requirements for credentials; certain vessels operating on navigable waters of the United States (including the Great Lakes and Western Rivers).
125.55 Outstanding Port Security Card Applications.
125.57 Applications previously denied.

AUTHORITY: R.S. 4517, 4518, secs. 19, 2, 23 Stat. 58, 118, sec. 7, 49 Stat. 1936, sec. 1, 40 Stat. 220; 46 U.S.C. 570–572, 2, 689, and 70105; 50 U.S.C. 191, E.O. 10173, E.O. 10277, E.O. 10352, 3 CFR, 1949–1953 Comp. pp. 356, 778, 873.

SOURCE: CGFR 56–15, 21 FR 2940, May 3, 1956, unless otherwise noted.

§ 125.01 Commandant.

The term *Commandant* means Commandant of the Coast Guard.

§ 125.03 District Commander.

The term *District Commander* means the officer of the Coast Guard designated by the Commandant to command a Coast Guard District.

§ 125.05 Captain of the Port.

The term *Captain of the Port* means the officer of the Coast Guard, under the command of a District Commander, so designated by the Commandant for the purpose of giving immediate direction to Coast Guard law enforcement activities within the general proximity of the port in which he is situated.

§ 125.06 Western rivers.

The term *western rivers* as used in the regulations in this subchapter shall include only the Red River of the North, the Mississippi River and its tributaries above the Huey P. Long Bridge, and that part of the Atchafalaya River above its junction with the Plaquemine-Morgan City alternate waterway.

[CGFR 57–52, 22 FR 10301, Dec. 20, 1957]

§ 125.07 Waterfront facility.

The term *waterfront facility* as used in this subchapter, means all piers, wharves, docks, and similar structures to which vessels may be secured, buildings on such structures or contiguous to them, and equipment and materials on such structures or in such buildings.

§ 125.08 Great Lakes.

The term *Great Lakes* as used in the regulations in this subchapter shall include the Great Lakes and their connecting and tributary waters.

[CGFR 57–52, 22 FR 10301, Dec. 20, 1957]

§ 125.09 Identification credentials.

The term *Identification credentials* as used in this subchapter, means any of the following:

(a) Coast Guard Port Security Card (Form CG 2514).

(b) Merchant Mariner's Document.

(c) Armed Forces Identification Card.

(d) Identification credentials issued by Federal Law enforcement and intelligence agencies to their officers and employees (e. g., Department of the Treasury, Department of Justice, Federal Communications Commission).

(e) Identification credentials issued to public safety officials (e. g., police, firemen) when acting within the scope of their employment.

(f) Transportation Worker Identification Credential.

(g) Such other identification as may be approved by the Commandant from time to time.

[CGD 56–15, 21 FR 2940, May 3, 1956, as amended by CGD 77–228, 43 FR 53427, Nov. 16, 1978; CG–2006–24196, 72 FR 3587, Jan. 25, 2007]

§ 125.11 Form of Coast Guard Port Security Card.

The Coast Guard Port Security Card issued by the Coast Guard under the provisions of this subchapter shall be a laminated card bearing photograph, signature, fingerprint, and personal description of the holder, and other pertinent data.

§ 125.12 Period of validity of Coast Guard Port Security Cards.

(a) The Coast Guard Port Security Card (Form CG–2514) shall be valid for a period of eight years from the date of issuance thereof unless sooner suspended or revoked by proper authority. On the first day after eight years from the date of issuance, the Coast Guard Port Security Card (Form CG–2514) is hereby declared invalid and shall be considered null and void for all purposes.

(b) The holder of a Coast Guard Port Security Card, which is about to expire or has expired, may apply for a new Coast Guard Port Security Card in accordance with the procedures set forth in § 125.21. In the event the applicant's Coast Guard Port Security Card has expired, such card shall accompany the application for a new Coast Guard Port Security Card. In the event the applicant is holding a valid Coast Guard Port Security Card at the time he submits his application for a new card, such person shall surrender the old or expired Coast Guard Port Security Card at the time he is issued a new Coast Guard Port Security Card. In the event the old Coast Guard Port Security Card was lost, stolen, or destroyed, then the applicant shall comply with the provisions in § 125.51, regarding the replacement of a lost Coast Guard Port Security Card and the new card issued as a replacement for a lost card which has expired or is about to expire shall bear a current issuance date.

[CGFR 58–52, 23 FR 9751, Dec. 18, 1958]

§ 125.13 Captain of the Port Identification Cards.

Captain of the Port Identification Cards issued under the form designation ''Form CG 2514'' prior to the revision of August 1950 were declared invalid by a notice published in the FEDERAL REGISTER on September 11, 1946 (11 FR 10103), which declaration is hereby reaffirmed.

§ 125.15 Access to waterfront facilities, and port and harbor areas, including vessels and harbor craft therein.

(a) The Commandant will, from time to time, direct Captains of the Port of certain ports to prevent access of persons who do not possess one or more of the identification credentials listed in § 125.09 to those waterfront facilities, and port and harbor areas, including vessels and harbor craft therein, where the following shipping activities are conducted:

(1) Those vital to the Military Defense Assistance Program.

(2) Those pertaining to the support of U.S. military operations.

(3) Those pertaining to loading and unloading explosives and other dangerous cargo.

(4) Those essential to the interests of national security and defense, to prevent loss, damage or injury, or to insure the observance of rights and obligations of the United States.

(b) No person who does not possess one of the identification credentials aforesaid shall enter or remain in such facilities, or port or harbor areas, including vessels and harbor craft therein.

(c) The Captain of the Port shall give local public notice of the restriction of access to waterfront facilities, and port

and harbor areas, including vessels and harbor craft therein, as far in advance as practicable, and shall cause such facilities and areas to be suitably marked as to such restriction.

[CGFR 56–15, 21 FR 2940, May 3, 1956, as amended by CGFR 58–43, 23 FR 8542, Nov. 1, 1958]

§ 125.17 Persons eligible for Coast Guard Port Security Cards.

(a) Only the following persons may be issued Coast Guard Port Security Cards:

(1) Persons regularly employed on vessels or on waterfront facilities.

(2) Persons having regular public or private business connected with the operation, maintenance, or administration of vessels, their cargoes, or waterfront facilities.

(b) A holder of a Merchant Mariner's Document shall not be issued a Port Security Card, unless his Merchant Mariner's Document is surrendered to the Coast Guard. In this connection, see § 125.09.

[CGFR 62–39, 27 FR 11259, Nov. 15, 1962, as amended by CGD 77–228, 43 FR 53427, Nov. 16, 1978]

§ 125.19 Standards.

Information concerning an applicant for a Coast Guard Port Security Card, or a holder of such card, which may preclude a determination that his character and habits of life are such as to warrant the belief that his presence on waterfront facilities, and port and harbor areas, including vessels and harbor craft therein, would not be inimical to the security of the United States, shall relate to the following:

(a) Advocacy of the overthrow or alteration of the Government of the United States by unconstitutional means.

(b) Commission of, or attempts or preparations to commit, an act of espionage, sabotage, sedition or treason, or conspiring with, or aiding or abetting another to commit such an act.

(c) Performing, or attempting to perform, duties or otherwise acting so as to serve the interests of another government to the detriment of the United States.

(d) Deliberate unauthorized disclosure of classified defense information.

(e) [Reserved]

(f) Having been adjudged insane, having been legally committed to an insane asylum, or treated for serious mental or neurological disorder, without evidence of cure.

(g) Having been convicted of any of the following offenses, indicative of a criminal tendency potentially dangerous to the security of such waterfront facilities and port and harbor areas, including vessels and harbor craft therein; arson, unlawful trafficking in drugs, espionage, sabotage, or treason.

(h) Drunkenness on the job or addiction to the use of narcotic drugs, without adequate evidence of rehabilitation.

(i) Illegal presence in the United States, its territories or possessions; having been found finally subject to deportation order by the United States Immigration and Naturalization Service.

[CGFR 56–15, 21 FR 2940, May 3, 1956, as amended by 37 FR 23422, Nov. 3, 1972]

§ 125.21 Applications.

(a)(1) Application for a Coast Guard Port Security Card shall be made under oath in writing and shall include applicant's answers in full to inquiries with respect to such matters as are deemed by the Commandant to be pertinent to the standards set forth in § 125.19, and to be necessary for a determination whether the character and habits of life of the applicant are such as to warrant the belief that his presence on waterfront facilities, and port and harbor areas, including vessels and harbor craft therein, would not be inimical to the security of the United States.

(2) The application also shall include applicant's complete identification, citizenship record, personal description, military record, if any, and a statement of the applicant's sponsor certifying the applicant's employment or union membership and that applicant's statements are true and correct to the best of sponsor's knowledge.

(3) The application shall be accompanied by two unmounted, dull finish photographs, 1 inch × 1 15/16 inches, of passport type, taken within one year of the date of application. The photograph shall show the full face with the

head uncovered and shall be a clear and satisfactory likeness of the applicant. It shall portray the largest image of the head and upper shoulders possible within the dimensions specified.

(4) Fingerprint records on each applicant shall be taken by the Coast Guard at the time application is submitted.

(5) The applicant shall present satisfactory proof of his citizenship.

(6) The applicant shall indicate the address to which his Coast Guard Port Security Card can be delivered to him by mail. Under special circumstances the applicant may arrange to call in person for the Coast Guard Port Security Card.

(7) The applicant shall present his application, in person, to a Coast Guard Port Security Unit designated to receive such applications. Such units will be located in or near each port where Coast Guard Port Security Cards are required. Each Captain of the Port shall forward promptly to the Commandant each application for a Coast Guard Port Security Card received by him.

(b) If an applicant fails or refuses to furnish the required information or to make full and complete answer with respect to all matters of inquiry, the Commandant shall hold in abeyance further consideration of the application, and shall notify the applicant that further action will not be taken unless and until the applicant furnishes the required information and fully and completely answers all inquiries directed to him.

[CGFR 59–63, 25 FR 1589, Feb. 24, 1960]

§ 125.23 United States citizens.

Acceptable evidence of United States citizenship is described in this section in the order of its desirability; however, the Coast Guard will reject any evidence not believed to be authentic;

(a) Birth certificate or certified copy thereof.

(b) Certificate of naturalization. This shall be presented by all persons claiming citizenship through naturalization.

(c) Baptismal certificate or parish record recorded within one year after birth.

(d) Statement of a practicing physician certifying that he attended the birth and that he has a record in his possession showing the date and place of birth.

(e) United States passport.

(f) A commission in one of the armed forces of the United States, either regular or reserve; or satisfactory documentary evidence of having been commissioned in one of the armed forces subsequent to January 1, 1936, provided such commission or evidence shows the holder to be a citizen.

(g) A continuous discharge book, or Merchant Mariner's Document issued by the Coast Guard which shows the holder to be a citizen of the United States.

(h) If an applicant claiming to be a citizen of the United States submits a delayed certificate of birth issued under a State's seal, it may be accepted as prima facie evidence of citizenship if no one of the requirements in paragraphs (a) through (g) of this section can be met by the applicant and in the absence of any collateral facts indicating fraud in its procurement.

(i) If no one of the requirements in paragraphs (a) through (h) of this section can be met by the applicant, he should make a statement to that effect, and in an attempt to establish citizenship, he may submit for consideration data of the following character:

(1) Report of the Census Bureau showing the earliest record of age or birth available. Request for such information should be addressed to the Director of the Census, Suitland, Md. 20233. In making such request, definite information must be furnished the Census Bureau as to the place of residence when the first census was taken after the birth of the applicant, giving the name of the street and the number of the house, or other identification of place where living, etc.; also names of parents or the names of other persons with whom residing on the date specified.

(2) School records, immigration records, or insurance policies (the latter must be at least 10 years old).

§ 125.25 Aliens.

Alien registration records together with other papers and documents which indicated the country of which

the applicant is a citizen shall be accepted as evidence of citizenship in a foreign nation.

§ 125.27 Sponsorship of applicant.

Applications for a Coast Guard Port Security Card shall not be accepted unless sponsored. The applicant shall be sponsored by an authorized official of applicant's employer or by an authorized official of applicant's labor union. Each company and each labor union concerned shall file with the appropriate Captain of the Port a list of officials of the company or union who are authorized to sponsor applicants. Other sponsorship may be accepted where the circumstances warrant.

§ 125.29 Insufficient information.

(a)(1) If, in the judgment of the Commandant, an application does not contain sufficient information to enable him to satisfy himself that the character and habits of life of the applicant are such to warrant the belief that his presence on waterfront facilities, and port and harbor areas, including vessels and harbor craft herein, would not be inimical to the security of the United States, the Commandant may require the applicant to furnish, under oath in writing or orally, such further information as he deems pertinent to the standards set forth in § 125.19 and necessary to enable him to make such a determination.

(2) If an applicant fails or refuses to furnish such additional information, the Commandant shall hold in abeyance further consideration of the application, and shall notify the applicant that further action will not be taken unless and until the applicant furnishes such information.

(b) Upon receipt, the application and such further information as the Commandant may have required shall be referred, except in those instances where action on an application is held in abeyance pursuant to § 125.21(b) or to paragraph (a)(2) of this section, to a committee composed of a representative of the Legal Division, of the Merchant Vessel Personnel Division and of the Intelligence Division, Coast Guard Headquarters. The committee shall prepare an analysis of the available information and shall make recommendations for action by the Commandant.

[CGFR 59–63, 25 FR 1589, Feb. 24, 1960]

§ 125.31 Approval of applicant by Commandant.

(a) If the Commandant is satisfied that the character and habits of life of the applicant are not such as to warrant the belief that his presence on waterfront facilities, and port and harbor areas, including vessels and harbor craft therein, would be inimical to the security of the United States, he will direct that a Coast Guard Port Security Card be issued to the applicant.

(b) If the Commandant is not satisfied that the character and habits of life of the applicant are such as to warrant the belief that his presence on waterfront facilities, and port and harbor areas, including vessels and harbor craft therein, would not be inimical to the security of the United States, he will notify the applicant in writing as provided for in § 125.35.

§ 125.33 Holders of Coast Guard Port Security Cards.

(a) Whenever the Commandant is not satisfied that the character and habits of life of a holder of a Coast Guard Port Security Card are such as to warrant the belief that his presence on waterfront facilities and port and harbor areas, including vessels and harbor craft therein, would not be inimical to the security of the United States, he will request the holder to furnish, under oath in writing, such information as he deems pertinent and necessary for a determination on this issue.

(b) If the holder fails or refuses to furnish such information within thirty (30) days after receipt of the Commandant's request, the Commandant may issue the written notice provided for in § 125.35(a).

(c) The holder's failure or refusal to furnish such information shall preclude a determination that the holder's character and habits of life are such as to warrant the belief that his presence on waterfront facilities, and port and harbor areas, including vessels and harbor craft therein, would not be inimical to the security of the United States.

(d) Upon receipt of such information as the Commandant may have required, the procedure prescribed in § 125.29(b) shall be followed.

(e) If the Commandant is satisfied that the character and habits of life of the holder are such as to warrant the belief that his presence on waterfront facilities, and port and harbor areas, including vessels and harbor craft therein, would not be inimical to the security of the United States, he shall notify the holder accordingly.

(f) If the Commandant is not satisfied that the character and habits of life of the holder are such as to warrant the belief that his presence on waterfront facilities, and port and harbor areas, including vessels and harbor craft therein, would not be inimical to the security of the United States, he shall notify the holder in writing as provided for in § 125.35.

[CGFR 59–63, 25 FR 1589, Feb. 24, 1960]

§ 125.35 Notice by Commandant.

(a) The notice provided for in §§ 125.31 and 125.33 shall contain a statement of the reasons why the Commandant is not satisfied that the character and habits of life of the applicant or holder are such as to warrant the belief that his presence on waterfront facilities, and port and harbor areas, including vessels and harbor craft therein, would not be inimical to the security of the United States. Such notice shall be as specific and detailed as the interests of national security shall permit and shall include pertinent information such as names, dates, and places in such detail as to permit reasonable answer.

(b) The applicant or holder shall have 20 days from the date of receipt of the notice of reasons to file written answer thereto. Such answer may include statements or affidavits by third parties or such other documents or evidence as the applicant or holder deems pertinent to the matters in question.

(c) Upon receipt of such answer the procedure prescribed in § 125.29(b) shall be followed.

(d) If the Commandant is satisfied that the character and habits of life of the applicant or holder are such as to warrant the belief that his presence on waterfront facilities, and port and harbor areas, including vessels and harbor craft therein, would not be inimical to the security of the United States, he shall, in the case of an applicant, direct that a Coast Guard Port Security Card be issued to the applicant, or, in the case of a holder, notify him accordingly.

(e) If the Commandant is not satisfied that the applicant's or holder's character and habits of life are such as to warrant the belief that his presence on waterfront facilities, and port and harbor areas, including vessels and harbor craft therein, would not be inimical to the security of the United States, the Commandant shall refer the matter to a Hearing Board for hearing and recommendation in accordance with the provisions of this part.

§ 125.37 Hearing Boards.

The Commandant may establish a Hearing Board in each Coast Guard District. The Commandant shall designate for each Hearing Board a Chairman, who shall be, so far as practicable, an officer of the Coast Guard. The Commandant shall designate, so far as practicable, a second member from a panel of persons representing labor named by the Secretary of Labor, and a third member from a panel of persons representing management named by the Secretary of Labor.

§ 125.39 Notice by Hearing Board.

Whenever the Commandant refers a matter to a Hearing Board, the Chairman shall:

(a) Fix the time and place of the hearing;

(b) Inform the applicant or holder of the names of the members of the Hearing Board, their occupations, and the businesses or organizations with which they are affiliated, of his privilege of challenge, and of the time and place of the hearing;

(c) Inform the applicant or holder of his privilege to appear before the Hearing Board in person or by counsel or representative of his choice, and to present testimonial and documentary evidence in his behalf, and to cross-examine any witnesses appearing before the Board; and

(d) Inform the applicant or holder that if within 10 days after receipt of

the notice he does not request an opportunity to appear before the Hearing Board, either in person or by counsel or representative, the Hearing Board will proceed without further notice to him.

§ 125.41 Challenges.

Within five days after receipt of the notice described in § 125.39 the applicant or holder may request disqualification of any member of the Hearing Board on the grounds of personal bias or other cause. The request shall be accompanied by an affidavit setting forth in detail the facts alleged to constitute grounds for disqualification. The affidavit may be supplemented by an oral presentation if desired. If after due consideration the Chairman believes a challenged member is qualified notwithstanding the challenge, he shall notify the person who made the challenge and arrange to proceed with the hearing. If the person who made the challenge takes exception to the ruling of the Chairman, the exception and data relating to the claim of disqualification shall be made a matter of record. If the Chairman finds that there is reasonable ground for disqualification he shall furnish the person who made the challenge with the name of an alternate in lieu of the challenged member and arrange to proceed with the hearing. In the event the Chairman is challenged, he shall forthwith notify the Commandant, furnishing the grounds for the claim of disqualification, and the Commandant shall act upon the challenge in accordance with the foregoing procedure. In addition to the right to challenge for cause, a person who has requested a hearing shall have two peremptory challenges, one challenge for the management member and one challenge for the labor member of the Hearing Board. Should the management member be so challenged, the person who made the challenge may elect to have the management member replaced by another management member or by a member not representing either management or labor; if the member peremptorily challenged represents labor, the person who made the challenge may elect to have the labor member replaced by another labor member or by a member not representing either management or labor.

§ 125.43 Hearing procedure.

(a) Hearings shall be conducted in an orderly manner and in a serious, businesslike atmosphere of dignity and decorum and shall be expedited as much as possible.

(b) The hearing shall be in open or closed session at the option of the applicant or holder.

(c) Testimony before the Hearing Board shall be given under oath or affirmation.

(d) The Chairman of the Hearing Board shall inform the applicant or holder of his right to:

(1) Participate in the hearing;

(2) Be represented by counsel of his choice;

(3) Present witnesses and offer other evidence in his own behalf and in refutation of the reasons set forth in the Notice of the Commandant; and

(4) Cross-examine any witnesses offered in support of such reasons.

(e) Hearings shall be opened by the reading of the Notice of the Commandant and the answer thereto. Any statement and affidavits filed by the applicant or holder may be incorporated in the record by reference.

(f) The Hearing Board may, in its discretion, invite any person to appear at the hearing and testify. However, the Board shall not be bound by the testimony of such witness by reason of having called him and shall have full right to cross-examine the witness. Every effort shall be made to produce material witnesses to testify in support of the reasons set forth in the Notice of the Commandant, in order that such witnesses may be confronted and cross-examined by the applicant or holder.

(g) The applicant or holder may introduce such evidence as may be relevant and pertinent. Rules of evidence shall not be binding on the Hearing Board, but reasonable restrictions may be imposed as to the relevancy, competency and materiality of matters considered. If the applicant or holder is, or may be, handicapped by the nondisclosure to him of confidential sources, or by the failure of witnesses to appear, the Hearing Board shall take the fact into consideration.

(h) The applicant or holder or his counsel or representative shall have

the right to control the sequence of witnesses called by him.

(i) The Hearing Board shall give due consideration to documentary evidence developed by investigation, including membership cards, petitions bearing the applicant's or holder's signature, books, treatises or articles written by the applicant or holder and testimony by the applicant or holder before duly constituted authority.

(j) Complete verbatim stenographic transcription shall be made of the hearing by qualified reporters and the transcript shall constitute a permanent part of the record. Upon request, the applicant or holder or his counsel or representative shall be furnished, without cost, a copy of the transcript of the hearing.

(k) The Board shall reach its conclusion and base its determination on information presented at the hearing, together with such other information as may have been developed through investigation and inquiries or made available by the applicant or holder.

(l) If the applicant or holder fails, without good cause shown to the satisfaction of the chairman, to appear personally or to be represented before the Hearing Board, the Board shall proceed with consideration of the matter.

(m) The recommendation of the Hearing Board shall be in writing and shall be signed by all members of the Board. The Board shall forward to the Commandant, with its recommendation, a memorandum of reasons in support thereof. Should any member be in disagreement with the majority a dissent should be noted setting forth the reasons therefor. The recommendation of the Board, together with the complete record of the case, shall be sent to the Commandant as expeditiously as possible.

§ 125.45 Action by Commandant.

(a) If, upon receipt of the Board's recommendation, the Commandant is satisfied that the character and habits of life of the applicant or holder are such as to warrant the belief that his presence on waterfront facilities, and port and harbor areas, including vessels and harbor craft therein, would not be inimical to the security of the United States, he shall, in the case of an applicant, direct that a Coast Guard Port Security Card be issued to the applicant, or, in the case of a holder, notify him accordingly.

(b) If, upon receipt of the Board's recommendation, the Commandant is not satisfied that the character and habits of life of the applicant or holder are such as to warrant the belief that his presence on waterfront facilities, and port and harbor areas, including vessels and harbor craft therein, would not be inimical to the security of the United States, the Commandant shall:

(1) In the case of an applicant, notify him that a Coast Guard Port Security Card will not be issued to the applicant, or,

(2) In the case of a holder, revoke and require the surrender of his Coast Guard Port Security Card.

(c) Such applicant or holder shall be notified of his right, and shall have 20 days from the receipt of such notice within which, to appeal under this part.

§ 125.47 Appeals.

(a) The Commandant shall establish at Coast Guard Headquarters, Washington, DC, an Appeal Board to hear appeals provided for in this part. The Commandant shall designate for the Appeal Board a Chairman, who shall be so far as practicable, an officer of the Coast Guard. The Commandant shall designate, so far as practicable, a member from a panel of persons representing management nominated by the Secretary of Labor, and a member from a panel of persons representing labor nominated by the Secretary of Labor. The Commandant shall insure that persons designated as Appeal Board members have suitable security clearance. The Chairman of the Appeal Board shall make all arrangements incident to the business of the Appeal Board.

(b) If an applicant or holder appeals to the Appeal Board within 20 days after receipt of notice of his right to appeal under this part, his appeal shall be handled under the same procedure as that specified in § 125.39, and the privilege of challenge may be exercised through the same procedure as that specified in § 125.41.

(c) Appeal Board proceedings shall be conducted in the same manner as that specified in § 125.43.

§ 125.49 Action by Commandant after appeal.

(a) If, upon receipt of the Appeal Board's recommendation, the Commandant is satisfied that the character and habits of life of the applicant or holder are such as to warrant the belief that his presence on waterfront facilities, and port and harbor areas, including vessels and harbor craft therein, would not be inimical to the security of the United States, he shall, in the case of an applicant, direct that a Coast Guard Port Security Card be issued to the applicant, or in the case of a holder, notify him accordingly.

(b) If, upon receipt of the Appeal Board's recommendation, the Commandant is not satisfied that the character and habits of life of the applicant or holder are such as to warrant the belief that his presence on waterfront facilities, and port and harbor areas, including vessels and harbor craft therein, would not be inimical to the security of the United States, the Commandant shall notify the applicant or holder that his appeal is denied.

§ 125.51 Replacement of lost Coast Guard Port Security Card.

(a) Any person whose Coast Guard Port Security Card has been stolen, lost, or destroyed shall report that fact to a Coast Guard Port Security Unit or Captain of the Port as soon thereafter as possible.

(b) A person who has lost a Coast Guard Port Security Card may apply for a replacement card by submitting ''An Application for Replacement of Lost Port Security Card'' (Form CG 2685A) to a Coast Guard Port Security Unit. A replacement will be issued only after a full explanation of the loss of the Coast Guard Port Security Card is made in writing to the Coast Guard and after a full check is made and authorization is granted by the Commandant.

(c) Any person to whom a Coast Guard Port Security Card has been issued as a replacement for a lost card, shall immediately surrender the original card to the nearest Coast Guard Port Security Unit or Captain of the Port if the original card should be recovered.

§ 125.53 Requirements for credentials; certain vessels operating on navigable waters of the United States (including the Great Lakes and Western Rivers).

(a) Every person desiring access to vessels, except public vessels, falling within any of the categories listed below, as a master, person in charge, or member of the crew thereof, shall be required to be in possession of one of the identification credentials listed in § 125.09.

(1) Towing vessels, barges, and lighters operating in the navigable waters of the continental United States other than the Great Lakes and Western Rivers.

(2) Harbor craft, such as water taxis, junk boats, garbage disposal boats, bum boats, supply boats, repair boats, and ship cleaning boats, which in the course of their normal operations service or contact vessels, foreign or domestic, public or merchant, in the navigable waters of the continental United States other than the Great Lakes and Western Rivers.

(b) The term ''master, person in charge, or member of the crew'' shall be deemed to include any person who serves on board in any capacity concerned with the operation, maintenance, or administration of the vessel or its cargo.

(c) Where the Coast Guard Port Security Card (Form CG 2514) is to be used as the identification required by paragraph (a) of this section, application for such card may be made immediately by the persons concerned. The issuance of the Coast Guard Port Security Card shall be in the form and manner prescribed by § 125.11.

(d) At the discretion of the District Commander any person desiring access to vessels of the categories named in this section, who may be required by the provisions hereof to possess identification credentials, may be furnished a letter signed by the District Commander or the Captain of the Port and this letter shall serve in lieu of a Coast Guard Port Security Card and will authorize such access for a period not to exceed 60 days, and such a letter issued

shall be deemed to be satisfactory identification within the meaning of § 125.09. The issuance of the letter shall be subject to the following conditions:

(1) The services of the person are necessary to avoid delay in the operation of the vessel;

(2) The person does not possess one of the identification credentials listed in § 125.09.

(3) The person has filed his application for a Coast Guard Port Security Card or submits his application before the letter is issued; and,

(4) The person has been screened by the District Commander or Captain of the Port and such officer is satisfied concerning the eligibility of the applicant to receive a temporary letter.

[CGFR 56–15, 21 FR 2940, May 3, 1956, as amended by CGFR 58–51, 21 FR 9339, Nov. 30, 1956]

§ 125.55 Outstanding Port Security Card Applications.

A person who has filed an application for a Coast Guard Port Security Card and who did not receive such a document prior to May 1, 1956, shall submit a new application in accordance with the requirements of this part.

[CGFR 61–54, 26 FR 11862, Dec. 12, 1961]

§ 125.57 Applications previously denied.

A person who has been denied a Coast Guard Port Security Card before May 1, 1956, may file a new application for such a document in accordance with the requirements of this part.

PART 126—HANDLING OF DANGEROUS CARGO AT WATERFRONT FACILITIES

Sec.

126.1 What does this part apply to?
126.3 Definitions.
126.5 Incorporation by reference: Where can I get a copy of the publications mentioned in this part?
126.11 Waiver authority based on local or unusual conditions.
126.12 How do I request the use of an alternative method of complying with a requirement in this part?
126.13 Designation of waterfront facilities.
126.15 What conditions must a designated waterfront facility meet?
126.16 Conditions for designating a ''facility of particular hazard.''
126.17 Permits required for handling designated dangerous cargo.
126.19 Issuance of permits for handling designated dangerous cargo.
126.21 Permitted transactions.
126.23 Termination or suspension of permits.
126.25 Penalties for handling designated dangerous cargo without permit.
126.27 General permit for handling dangerous cargo.
126.28 Ammonium nitrate, ammonium nitrate fertilizers, fertilizer mixtures, or nitro carbo nitrate; general provisions.
126.29 Supervision and control of dangerous cargo.
126.30 What are the conditions for conducting welding and hotwork?
126.31 Termination or suspension of general permit.
126.33 Penalties for handling dangerous cargo without permit.
126.35 Primary responsibility.
126.37 Separability.

AUTHORITY: 33 U.S.C. 1231; 49 CFR 1.46.

§ 126.1 What does this part apply to?

This part applies to waterfront facilities handling packaged and bulk-solid dangerous cargo and to vessels at those facilities.

[USCG–1998–4302, 68 FR 55440, Sept. 26, 2003]

§ 126.3 Definitions.

As used in this part—

Break-bulk means packages that are handled individually, palletized, or unitized for purposes of transportation, as opposed to materials in bulk and containerized freight.

Bulk means without mark or count and directly loaded or unloaded to or from a hold or tank on a vessel without the use of containers or break-bulk packaging.

Captain of the port or *COTP* means the officer of the Coast Guard, under the command of a District Commander, is designated by the Commandant for the purpose of giving immediate direction to Coast Guard law enforcement activities within an assigned area.

Cargo of particular hazard means any of the following:

(1) Division 1.1 and 1.2 explosives, as defined in 49 CFR 173.50, for which a permit is required under 33 CFR 126.17.

(2) Ammonium nitrate products, division 5.1 (oxidizing) materials listed in

49 CFR 176.410, for which a permit is required under 49 CFR 176.415.

(3) Division 4.3 dangerous when wet products as defined in 49 CFR 173.124, in excess of 60 mt.

(4) Division 2.3 and 6.1 poison inhalation hazard products as defined in 49 CFR 173.115 and 173.132, respectively.

(5) Class 7 highway route controlled quantity radioactive material or fissile material, controlled shipment, as defined in 49 CFR 173.403.

Commandant means the Commandant of the United States Coast Guard.

Container means a reusable container that has a volume of 1.81 cubic meters (64 cubic feet) or more, is designed and constructed to permit being lifted with its contents intact, and is intended primarily for containment of packages (in unit form) during transportation.

Dangerous cargo means all hazardous materials listed in 49 CFR parts 170 through 179, except those materials preceded by an ''A'' in the Hazardous Materials Table in 49 CFR 172.101, and all cargo listed in 46 CFR part 148.

Designated dangerous cargo means Division 1.1 and 1.2 explosives as defined in 49 CFR 173.50.

Designated waterfront facility means a waterfront facility designated under § 126.13 for the handling, storing, loading, and discharging of any hazardous material(s) subject to the Dangerous Cargoes Regulations (49 CFR parts 170 through 179), except for those materials preceded by an ''A'' in the Hazardous Materials Table in 49 CFR 172.101 and for those materials carried as bulk liquids.

Facility of particular hazard means a designated waterfront facility that is authorized to handle a cargo of particular hazard.

Facility operator means the person or company who owns, operates, or is responsible for the operation of a waterfront facility.

Net tons means net weight in tons.

Net weight, in reference to material in a package, tank, or container, means the weight of the contents of a package, tank, or container and does not include the weight of any packaging material or containing devices.

Transport unit means a transport vehicle or a container.

Waterfront facility means all piers, wharves, and similar structures to which a vessel may be secured; areas of land, water, or land and water under and in the immediate proximity to these structures; buildings on or contiguous to these structures; and the equipment and materials on or in these structures or buildings. The term does not include facilities directly operated by the Department of Defense.

[USCG–1998–4302, 68 FR 55440, Sept. 26, 2003, as amended by USCG–2008–0179, 73 FR 35013, June 19, 2008]

§ 126.5 Incorporation by reference: Where can I get a copy of the publications mentioned in this part?

(a) Certain material is incorporated by reference into this part with the approval of the Director of the Federal Register under 5 U.S.C. 552(a) and 1 CFR part 51. To enforce any edition other than that specified in paragraph (b) of this section, we must publish a notice of change in the FEDERAL REGISTER and the material must be available to the public. All approved material is available for inspection at the U.S. Coast Guard, Vessel and Facility Operating Standards Division (CG–522), 2100 2nd St. SW., Stop 7126, Washington, DC 20593–7126, and at the National Archives and Records Administration (NARA). For information on the availability of this material at NARA, call 202–741–6030, or go to: *http://www.archives.gov/federal_register/code_of_federal_regulations/ibr_locations.html*. All approved material is available from the sources indicated in paragraph (b) of this section.

(b) The materials approved for incorporation by reference in this part, and the sections affected, are as follows:

ASTM International, 100 Barr Harbor Drive, P.O. Box C700, West Conshohocken, PA 19428–2959, 877–909–2786, *http://www.astm.org*.

ASTM F1121–87 (Reapproved 2010), Standard Specification for International Shore Connections for Marine Fire Applications, (approved March 1, 2010) 126.15

National Fire Protection Association (NFPA), One Batterymarch Park, P.O. Box 9101, Quincy, MA 02269–9101:

NFPA 10, Standard for Portable Fire Extinguishers, 1998 Edition	126.15
NFPA 13, Standard for the Installation of Sprinkler Systems, 1996 Edition	126.15
NFPA 14, Standard for the Installation of Standpipe and Hose Systems, 1996 Edition	126.15
NFPA 30, Flammable and Combustible Liquids Code, 1996	126.15
NFPA 51B, Standard for Fire Prevention in Use of Cutting and Welding Processes, 1994 Edition	126.30
NFPA 70, National Electrical Code, 1996	126.15
NFPA 307, Standard for the Construction and Fire Protection of Marine Terminals, Piers, and Wharves, 1995 Edition	126.15

[USCG–1998–4302, 68 FR 55441, Sept. 26, 2003, as amended at 69 FR 18803, Apr. 9, 2004; USCG–2010–0351, 75 FR 36283, June 25, 2010; USCG–2012–0866, 78 FR 13248, Feb. 27, 2013]

§ 126.11 Waiver authority based on local or unusual conditions.

Whenever the Commandant, the District Commander, or the Captain of the Port finds that the application of any provisions contained in §§ 126.15 and 126.16 is not necessary to the safety or security of the port and vessels and waterfront facilities therein, or that its application is not practical because of local conditions or because the materials or personnel required for compliance are not available, or because the requirements of the national defense justify a departure from such provision, the Commandant, the District Commander, or the Captain of the Port may waive compliance with such provision, to the extent and under such requirements as they determine.

[CGD 78–023, 44 FR 4643, Jan. 22, 1979]

§ 126.12 How do I request the use of an alternative method of complying with a requirement in this part?

(a) An owner or operator of a waterfront facility may request that the COTP allow the use of an alternative method of complying with a requirement in this part.

(b) The request must establish, to the COTP's satisfaction—

(1) That compliance with the requirement is economically or physically impractical; and

(2) That the alternative requested provides an equivalent or greater level of safety.

(c) The COTP examines the request and provides an answer, in writing, within 30 days of receipt of the request.

[USCG–1998–4302, 68 FR 55441, Sept. 26, 2003]

§ 126.13 Designation of waterfront facilities.

(a) Waterfront facilities which fulfill the conditions required in § 126.15, unless waived under provisions of § 126.11, and only such waterfront facilities are designated for the handling, storing, stowing, loading, discharging, or transporting of dangerous cargo, subject to compliance with other applicable requirements and provisions set forth in this part.

(b) Handling, storing, stowing, loading, discharging, or transporting dangerous cargo at any waterfront facility other than one designated by this section is hereby prohibited, and violation of this prohibition will subject the violator to the civil or criminal penalties provided in section 13 of the Ports and Waterways Safety Act (33 U.S.C. 1232).

[CGFR 57–52, 22 FR 10302, Dec. 20, 1957, as amended by CGD 78–023, 44 FR 4643, Jan. 22, 1979]

§ 126.15 What conditions must a designated waterfront facility meet?

(a) All designated waterfront facilities must meet the following:

(1) *Fire extinguishing equipment.* Fire extinguishing equipment, such as automatic sprinklers, hydrants, hose connections, and firefighting water supplies must be available and maintained in adequate quantities and locations. Fire extinguishing equipment must meet State and local laws. In the absence of applicable State and local laws, fire extinguishing equipment must meet NFPA 10, 13, 14, and 307. (Incorporated by reference, see § 126.5.)

(2) *Fire appliances.* The location of all fire appliances, such as hydrants, standpipes, hose stations, fire extinguishers, and fire alarm boxes must be conspicuously marked and readily accessible according to NFPA 10, 13, 14, and 307.

(3) *Warning signs.* Warning signs must be constructed and installed according to NFPA 307, chapter 7–8.7.

(4) *Lighting.* If the facility transfers dangerous cargo between sunset and sunrise, it must have outdoor lighting that adequately illuminates the transfer work area. The lighting must be installed and maintained according to NFPA 70 (Incorporated by reference, see § 126.5.) and must be located or shielded so that it cannot be mistaken for an aid to navigation and does not interfere with navigation on waterways.

(5) *International shore connection.* If the facility conducts cargo operations involving foreign-flag vessels, the facility must have an international shore connection meeting ASTM F–1121. (Incorporated by reference, see § 126.5.)

(6) *Access to the facility.* Whenever dangerous cargo is transferred or stored on the facility, access to the facility must be limited to—

(i) Personnel working on the facility or vessel;

(ii) Delivery and service personnel authorized to conduct their business;

(iii) Coast Guard and other Federal, State, and local officials;

(iv) Local emergency personnel, such as police officers and firemen; and

(v) Other persons authorized by the owner or operator of the facility.

(7) *Security measures.* Guards must be stationed, or equivalent controls acceptable to the COTP must be used, to deter and detect unlawful entrance; to detect and report fire hazards, fires, and releases of dangerous cargoes and hazardous materials; to check the readiness of protective equipment; and to report other emergency situations at the facility.

(8) *Coast Guard personnel.* At any time, Coast Guard personnel must be allowed to enter the facility to conduct inspections or board vessels moored at the facility.

(9) *Material handling equipment, trucks, and other motor vehicles.* When dangerous cargo is being transferred or stored on the facility, material handling equipment, trucks, and other motor vehicles operated by internal combustion engines must meet the requirements of NFPA 307, chapter 9.

(10) *Smoking.* Smoking is allowed on the facility where permitted under State or local law. Signs must be posted marking authorized smoking areas. ''No Smoking'' signs must be conspicuously posted elsewhere on the facility.

(11) *Rubbish and waste material.* All rubbish, debris, and waste materials must be placed in adequate receptacles.

(12) *Adequacy of equipment, materials, and standards.* The COTP may determine that any equipment, material, or standard is not reasonably adequate under the circumstances. If so, the COTP informs the owner or operator in writing and provides an opportunity for the owner or operator to have the deficiency corrected.

(b) All designated waterfront facilities that handle dangerous cargo, not in transport units, must also meet the following:

(1) *Arrangement of cargo, freight, merchandise, or material.* Cargo, freight, merchandise, and other items or material on the facility must be arranged to provide access for firefighting and clearance for fire prevention according to NFPA 307, chapter 8–5.

(2) *Portable fire extinguishers.* Each facility must have and maintain, in adequate quantities and locations, portable fire extinguishers that meet the requirements of NFPA 10. These extinguishers must be inspected and maintained in accordance with NFPA 10.

(3) *Electrical systems.* All new electrical equipment and wiring installed on the facility must be of the same type and installed as specified under NFPA 70. All defective or dangerous electrical equipment and wiring must be promptly repaired, replaced, or permanently disconnected.

(4) *Heating equipment and other sources of ignition.* Open fires and open-flame lamps are prohibited on the facility. Heating equipment must meet NFPA 307, chapter 9–4.

(5) *Maintenance stores and supplies.* Hazardous material(s) used in the operation or maintenance of the facility may be stored only in amounts necessary for normal operating conditions. These materials must be stored in compartments that are remote from combustible material; constructed to provide safe storage; and kept clean and free of scrap materials, empty containers, soiled wiping rags, waste, and other debris. Flammable liquids must

be stored according to NFPA 30, chapter 4. (Incorporated by reference, see § 126.5.)

(c) All designated waterfront facilities that handle dangerous cargo in transport units must also meet the following:

(1) *Terminal yards.* Terminal yards must conform to the standards in NFPA 307, chapter 5.

(2) *Containers.* Containers packed with dangerous cargo that are vertically stacked must be stacked no more than four high.

[USCG–1998–4302, 68 FR 55441, Sept. 26, 2003]

§ 126.16 Conditions for designating a "facility of particular hazard."

(a) *Basic requirements.* The facility shall comply with all the conditions in § 126.15 except where specifically waived by § 126.11.

(b) *Warning alarms.* Warning alarms shall be installed at the waterside of such a facility to warn approaching or transiting water traffic of immediate danger in the event of fire or cargo release. Warning alarms shall be of the siren type, or the emergency rotating flashing light type, and be of sufficient intensity to be heard, or seen, a distance of 1 mile during normal facility working conditions. The alarm signal shall not conflict with local municipal prescription.

[CGFR 67–93, 32 FR 20774, Dec. 23, 1967]

§ 126.17 Permits required for handling designated dangerous cargo.

Designated dangerous cargo may be handled, loaded, discharged, or transported at any designated waterfront facility only if a permit therefor has been issued by the Captain of the Port. This permit requirement may be waived, at the discretion of the Captain of the Port, when such cargoes are contained within railroad cars or highway vehicles which are moved on or across a waterfront facility used primarily for the transfer of railroad cars or highway vehicles to or from a railroad or highway vehicle ferry or carfloat; provided such designated cargoes are not removed from, or placed in, the railroad car or highway vehicle while it is in or on such waterfront facility.

[CGFR 58–43, 23 FR 8542, Nov. 1, 1958]

§ 126.19 Issuance of permits for handling designated dangerous cargo.

Upon the application of the owners or operators of a designated waterfront facility or of their authorized representatives, the Captain of the Port is authorized to issue a permit for each transaction of handling, loading, discharging, or transporting designated dangerous cargo at such waterfront facility provided the following requirements are met:

(a) The facility shall comply in all respect with the regulations in this subchapter.

(b) The quantity of designated dangerous cargo, except Class 1 (explosive) materials shipped by or for the Armed Forces of the United States, on the waterfront facility and vessels moored thereto shall not exceed the limits as to maximum quantity, isolation and remoteness established by local, municipal, territorial, or State authorities. Each permit issued under these conditions shall specify that the limits so established shall not be exceeded.

(c) The quantity of designated dangerous cargo consisting of Class 1 (explosive) materials shipped by or for the Armed Forces of the United States on the waterfront facility and vessels moored thereto shall not exceed the limits as to maximum quantity, isolation and remoteness as established by the Captain of the Port. Each permit issued under these conditions shall specify that the limits so established shall not be exceeded.

[CGFR 53–27, 18 FR 5348, Sept. 3, 1953, as amended by CGD 92–050, 59 FR 39965, Aug. 5, 1994]

§ 126.21 Permitted transactions.

All permits issued pursuant to § 126.19 are hereby conditioned upon the observance and fulfillment of the following:

(a) The conditions set forth in § 126.15 shall at all times be strictly observed.

(b) No amount of designated dangerous cargo, except Class 1 (explosive) materials shipped by or for the Armed Forces of the United States, in excess of the maximum quantity established by local, municipal, territorial, or State authorities shall be present on the waterfront facility and vessels moored thereto.

(c) Designated dangerous cargo shall not be brought onto the waterfront facility from shore except when laden within a railroad car or highway vehicle and shall remain in such railroad car or highway vehicle except when removed as an incident of its prompt transshipment. Designated dangerous cargo shall not be brought onto the waterfront facility from a vessel except as an incident of its prompt transshipment by railroad car or highway vehicle.

(d) No other dangerous cargo shall be on the waterfront facility during the period of transactions involving designated dangerous cargo, unless its presence is authorized by the Captain of the Port. This shall not apply to maintenance stores and supplies on the waterfront facility in conformity with § 126.15(g).

[CGFR 53–27, 18 FR 5348, Sept. 3, 1953, as amended by CGD 92–050, 59 FR 39965, Aug. 5, 1994]

§ 126.23 Termination or suspension of permits.

Any permit issued pursuant to § 126.19 shall terminate automatically at the conclusion of the transaction for which the permit has been issued and may be terminated, or suspended, prior thereto by the Captain of the Port whenever he deems that the security or safety of the port or vessels or waterfront facilities therein so requires. Confirmation of such termination or suspension by the Captain of the Port shall be given to the permittee in writing.

[CGFR 51–37, 16 FR 8679, Aug. 28, 1951]

§ 126.25 Penalties for handling designated dangerous cargo without permit.

Handling, loading, discharging, or transporting any designated dangerous cargo without a permit, as provided under § 126.17, being in force, will subject persons responsible therefore to the civil or criminal penalties provided in Section 13 of the Ports and Waterways Safety Act, as amended (33 U.S.C. 1232).

[CGD 78–023, 44 FR 4643, Jan. 22, 1979]

§ 126.27 General permit for handling dangerous cargo.

A general permit is hereby issued for the handling, storing, stowing, loading, discharging or transporting of dangerous cargo (other than designated dangerous cargo) in bulk, portable tanks, containers, or packagings, at designated waterfront facilities, conditioned upon the observance and fulfillment of the following:

(a) The conditions set forth in § 126.15 shall at all times be strictly observed.

(b) You must notify the COTP before you handle, store, stow, load, discharge, or transport, in the net weight amounts specified, the following dangerous cargo, except when contained within transport units or railroad or highway vehicles being transported across or on the waterfront facility solely for transfer to or from a railroad-car ferry, highway-vehicle ferry, or carfloat:

(1) Class 1, Division 1.3 and Division 1.5 (Explosive) materials, with a net explosive quantity in excess of 36,400 kg (40 net tons) at any one time.

(2) Class 2, Division 2.1 (Flammable Gas) materials in bulk packaging; or Division 2.3 (Poison Gas) materials in excess of 72,800 kg (80 net tons) at any one time.

(3) A Class 7 (Radioactive) material in a highway route controlled quantity, as defined in 49 CFR 173.403.

(4) Flammable solids or oxidizers, in excess of 100 net tons at any one time.

(5) Flammable gases, in excess of 10 net tons at any one time.

(6) Poisons (Class A).

(7) A bulk shipment of a cargo of particular hazard.

(c) No Class 1 (explosive) materials (as defined in 49 CFR 173.50) or other dangerous cargoes prohibited from, or not permitted for, transportation by 46 CFR part 148 or 49 CFR parts 171 through 179 may be present on the waterfront facility.

(d) Break-bulk dangerous cargo must be segregated according to 49 CFR 176.83(a) through (c). No separation is required for break-bulk dangerous cargo in limited-quantity packaging.

(e) Transport units and portable tanks containing dangerous cargo must be segregated according to 49 CFR 176.83(a), (b), and (f). The requirements

for vertical segregation and for on-deck, horizontal segregation in 49 CFR 176.83(f) apply. No separation is required for transport units containing dangerous cargo only in limited quantity packaging.

(f) Break-bulk dangerous cargo must be segregated from transport units containing dangerous cargo according to 49 CFR 176.83(e).

(g) Solid dangerous bulk cargo must be separated to prevent the interaction of incompatible materials in the event of an accident. Cargo not required to be segregated, when in break-bulk form, is not required to be segregated, when in bulk form. Dangerous cargo in break-bulk form must be segregated from solid dangerous cargo in bulk according to 49 CFR 176.83.

(h) Materials that are dangerous when wet (Division 4.3), water-soluble oxidizers (Division 5.1), and corrosive solids (Class 8) must be stored in a manner that prevents them from coming into contact with water.

(i) Corrosive liquids (Class 8) and liquid oxidizers (Division 5.1) must be handled and stored so that, in the event of a leak from their packaging, they would not come in contact with organic materials.

(j) Dangerous cargo stored on the facility must be arranged in a manner that retards the spread of fire, such as by interspersing dangerous cargo with inert or fire retardant material.

(k) Dangerous cargo stored on the facility, but not intended for use on the facility, must be packaged, marked, and labeled according to 49 CFR parts 171 through 180, as if the cargo was in transportation.

(l) Class 7 (Radioactive) material must be stored as specified in 49 CFR 173.447.

[CGD 78–023, 44 FR 4643, Jan. 22, 1979, as amended by CGD 75–238, 44 FR 63676, Nov. 5, 1979; CGD 75–238, 45 FR 57394, Aug. 28, 1980; CGD 92–050, 59 FR 39965, Aug. 5, 1994; USCG–1998–4302, 68 FR 55442, Sept. 26, 2003]

§ 126.28 Ammonium nitrate, ammonium nitrate fertilizers, fertilizer mixtures, or nitro carbo nitrate; general provisions.

(a) When any item of ammonium nitrate, ammonium nitrate fertilizers, fertilizer mixtures, or nitro carbo nitrate, described and defined as an oxidizer by the regulations of 49 CFR part 173 is handled, stored, stowed, loaded, discharged or transported on a waterfront facility, the following provisions shall apply:

(1) All outside containers shall be marked with the proper shipping name of the nitrate packed within the container.

(2) The building on a waterfront facility used for storage of any of these materials shall be of such construction as to afford good ventilation.

(3) Storage of any of these materials shall be at a safe distance from electric wiring, steam pipes, radiators or any heating mechanism.

(4) These materials shall be separated by a fire resistant wall or by a distance of at least 30 feet from organic materials or other chemicals and substances which could cause contamination such as flammable liquids, combustible liquids, corrosive liquids, chlorates, permanganates, finely divided metals, caustic soda, charcoal, sulfur, cotton, coal, fats, fish oils or vegetable oils.

(5) Storage of any of these materials shall be in a clean area upon clean wood dunnage, or on pallets over a clean floor. In the case of a concrete floor, storage may be made directly on the floor if it is first covered with a moisture barrier such as a polyethylene sheet or asphaltic laminated paper.

(6) Any spilled material shall be promptly and thoroughly cleaned up and removed from the waterfront facility. If any spilled material has remained in contact with a wooden floor for any length of time the floor shall be scrubbed with water and all spilled material shall be thoroughly dissolved and flushed away.

(7) An abundance of water for firefighting shall be readily available.

(8) Open drains, traps, pits or pockets which could be filled with molten ammonium nitrate if a fire occurred (and thus become potential detonators for the storage piles) must be eliminated or plugged.

NOTE: See 49 CFR 176.415 for permit requirements for nitro carbo nitrate and certain ammonium nitrates.

[CGD 78–023, 44 FR 4644, Jan. 22, 1979]

§ 126.29 Supervision and control of dangerous cargo.

(a) *Authority*. The Captain of the Port is authorized to require that any transaction of handling, storing, stowing, loading, discharging, or transporting the dangerous cargo covered by this subchapter shall be undertaken and continued only under the immediate supervision and control of the Captain of the Port or his duly authorized representative. In case the Captain of the Port exercises such authority, all directions, instructions, and orders of the Captain of the Port or his representative, not inconsistent with this part, with respect to such handling, storing, stowing, loading, discharging, and transporting; with respect to the operation of the waterfront facility; with respect to vessels handling, stowing, loading, or discharging of dangerous cargo at anchorages when the operations are under the immediate control and supervision of the Captain of the Port or his duly authorized representative; with respect to the ingress and egress of persons, articles, and things and to their presence on the waterfront facilty or vessel; and with respect to vessels approaching, moored at, and departing from the waterfront facility, shall be promptly obeyed.

(b) *Reporting discharge of dangerous liquid commodities into the waters of the United States*. To enhance the safety of the port and to protect vessels, their cargo, and waterfront facilities therein, the discharge into the navigable waters of the United States of petroleum products, petroleum byproducts or other dangerous liquid commodities which may create a hazard or toxic condition in the port area will be immediately reported to the Captain of the Port or District Commander by the owner or master of the vessel from which the discharge occurred, or the owner or operator of a waterfront facility from which the discharge occurred.

[CGFR 69–89, 34 FR 17478, Oct. 29, 1969]

§ 126.30 What are the conditions for conducting welding and hotwork?

(a) The facility operator must ensure that all welding or hotwork conducted at the facility meets the requirements of this section. Each operator of a vessel moored to the facility must ensure that all welding or hotwork conducted on the vessel meets the requirements of this section.

(b) The COTP may require an operator of a facility or of a vessel moored at the facility to notify the COTP before conducting welding or hotwork. Regardless of whether or not the COTP required notice, the facility operator must notify the COTP before conducting welding or hotwork on a vessel when containerized dangerous cargo is located within the distances listed in paragraph (f) of this section.

(c) Before conducting welding or hotwork, flammable vapors, liquids, or solids must be completely removed from any container, pipe, or transfer line being worked on.

(d) Before conducting welding or hotwork on tanks, tanks used for storage of flammable or combustible substances must be tested and certified gas free.

(e) All welding and hotwork must be conducted according to NFPA 51B. (Incorporated by reference, see § 126.5.)

(f) Welding or hotwork is prohibited during gas freeing operations within 30.5 meters (100 feet) of bulk cargo operations involving flammable or combustible materials, within 30.5 meters (100 feet) of fueling operations, within 30.5 meters (100 feet) of explosives, or within 15.25 meters (50 feet) of other hazardous materials.

(g) If the welding or hotwork is on the boundary of a compartment (*i.e.*, bulkhead, wall, or deck), a fire watch, in addition to that called for in NFPA 51B, must be stationed in the adjoining compartment.

(h) Personnel on fire watch must have no other duties except to watch for the presence of fire and to prevent the development of hazardous conditions.

(i) All safety precautions in relation to purging, inerting, or venting for all hotwork on containers must be followed.

(j) All local laws and ordinances must be followed.

(k) If a fire or other hazard occurs, all cutting, welding, or other hotwork equipment must be shut down.

[USCG–1998–4302, 68 FR 55442, Sept. 26, 2003]

§ 126.31 Termination or suspension of general permit.

The Captain of the Port is hereby authorized to terminate or to suspend the general permit granted by § 126.27 in respect to any particular designated waterfront facility whenever he deems that the security or safety of the port or vessels or waterfront facilities therein so requires. Confirmation of such termination or suspension shall be given to the permittee in writing. After such termination, the general permit may be revived by the District Commander with respect to such particular waterfront facility upon a finding by him that the cause of termination no longer exists and is unlikely to recur. After such suspension, the general permit shall be revived by the Captain of the Port with respect to such particular waterfront facility when the cause of suspension no longer exists, and he shall so advise the permittee in writing.

[CGFR 51–37, 16 FR 8680, Aug. 28, 1951, as amended by CGFR 69–89, 34 FR 17479, Oct. 29, 1969]

§ 126.33 Penalties for handling dangerous cargo without permit.

Handling, storing, stowing, loading, discharging, or transporting any dangerous cargo covered by § 126.27 under circumstances not covered by the general permit granted in § 126.27 or when such general permit is not in force will subject persons responsible therefor to the civil or criminal penalties provided in Section 13 of the Ports and Waterways Safety Act, as amended (33 U.S.C. sec. 1232).

[CGD 78–023, 44 FR 4644, Jan. 22, 1979]

§ 126.35 Primary responsibility.

Nothing contained in the rules, regulations, conditions, and designations in this part shall be construed as relieving the masters, owners, operators, and agents of vessels, docks, piers, wharves, or other waterfront facilities from their primary responsibility for the security of such vessels, docks, piers, wharves, or waterfront facilities.

[CGFR 51–37, 16 FR 8680, Aug. 28, 1951]

§ 126.37 Separability.

If any provision of the rules, regulations, conditions, or designations contained in this part or the application of such provision to any person, waterfront facility, or circumstances shall be held invalid, the validity of the remainder of the rules, regulations, conditions, or designations contained in this part and applicability of such provision to other persons, waterfront facilities, or circumstances, shall not be affected thereby.

[CGFR 51–37, 16 FR 8680, Aug. 28, 1951]

PART 127—WATERFRONT FACILITIES HANDLING LIQUEFIED NATURAL GAS AND LIQUEFIED HAZARDOUS GAS

Subpart A—General

Sec.
127.001 Applicability.
127.003 Incorporation by reference.
127.005 Definitions.
127.007 Letter of intent and waterway suitability assessment.
127.009 Letter of recommendation.
127.010 Reconsideration of the Letter of Recommendation.
127.011 Inspections of waterfront facilities.
127.013 Suspension of transfer operations.
127.015 Appeals.
127.017 Alternatives.
127.019 Operations Manual and Emergency Manual: Procedures for examination.

Subpart B—Waterfront Facilities Handling Liquefied Natural Gas

127.101 Design and construction: General.
127.103 Piers and wharves.
127.105 Layout and spacing of marine transfer area for LNG.
127.107 Electrical power systems.
127.109 Lighting systems.
127.111 Communications systems.
127.113 Warning signs.

EQUIPMENT

127.201 Sensing and alarm systems.
127.203 Portable gas detectors.
127.205 Emergency shutdown.
127.207 Warning alarms.

OPERATIONS

127.301 Persons in charge of shoreside transfer operations: Qualifications and certification.
127.303 Compliance with suspension order.
127.305 Operations Manual.

127.307 Emergency Manual.
127.309 Operations Manual and Emergency Manual: Use.
127.311 Motor vehicles.
127.313 Bulk storage.
127.315 Preliminary transfer inspection.
127.317 Declaration of inspection.
127.319 LNG transfer.
127.321 Release of LNG.

MAINTENANCE

127.401 Maintenance: General.
127.403 Inspections.
127.405 Repairs.
127.407 Testing.
127.409 Records.

PERSONNEL TRAINING

127.501 Applicability.
127.503 Training: General.

FIREFIGHTING

127.601 Fire equipment: General.
127.603 Portable fire extinguishers.
127.605 Emergency outfits.
127.607 Fire main systems.
127.609 Dry chemical systems.
127.611 International shore connection.
127.613 Smoking.
127.615 Fires.
127.617 Hotwork.

SECURITY

127.701 Security on existing facilities.
127.703 Access to the marine transfer area for LNG.
127.705 Security systems.
127.707 Security personnel.
127.709 Protective enclosures.
127.711 Communications.

Subpart C—Waterfront Facilities Handling Liquefied Hazardous Gas

DESIGN AND CONSTRUCTION

127.1101 Piping systems.
127.1102 Transfer hoses and loading arms.
127.1103 Piers and wharves.
127.1105 Layout and spacing of marine transfer area for LHG.
127.1107 Electrical systems.
127.1109 Lighting systems.
127.1111 Communication systems.
127.1113 Warning signs.

EQUIPMENT

127.1203 Gas detection.
127.1205 Emergency shutdown.
127.1207 Warning alarms.
127.1209 Respiratory protection.

OPERATIONS

127.1301 Persons in charge of transfers for the facility: Qualifications and certification.
127.1302 Training.
127.1303 Compliance with suspension order.
127.1305 Operations Manual.
127.1307 Emergency Manual.
127.1309 Operations Manual and Emergency Manual: Use.
127.1311 Motor vehicles.
127.1313 Storage of hazardous materials.
127.1315 Preliminary transfer inspection.
127.1317 Declaration of Inspection.
127.1319 Transfer of LHG.
127.1321 Release of LHG.
127.1325 Access to marine transfer area for LHG.

MAINTENANCE

127.1401 General.
127.1403 Inspections.
127.1405 Repairs.
127.1407 Tests.
127.1409 Records.

FIREFIGHTING EQUIPMENT

127.1501 General.
127.1503 Portable fire extinguishers.
127.1505 Emergency response and rescue.
127.1507 Water systems for fire protection.
127.1509 Equipment for controlling and extinguishing fires.
127.1511 International shore connection.

FIRE PROTECTION

127.1601 Smoking.
127.1603 Hotwork.
127.1605 Other sources of ignition.

AUTHORITY: 33 U.S.C. 1231; 46 U.S.C. Chapter 701; Department of Homeland Security Delegation No. 0170.1.

SOURCE: CGD 78–038, 53 FR 3376, Feb. 7, 1988, unless otherwise noted.

Subpart A—General

§ 127.001 Applicability.

(a) Subparts A and B of this part apply to the marine transfer area for LNG of each new waterfront facility handling LNG and to new construction in the marine transfer area for LNG of each existing waterfront facility handling LNG.

(b) Subpart A of this part and §§ 127.301 through 127.617 apply to the marine transfer area for LNG of each active existing waterfront facility handling LNG.

(c) Sections 127.007 (b), (c), and (d); 127.019(b); and 127.701 of subparts A and B of this part apply to the marine transfer area for LNG of each inactive existing facility.

(d) Subparts A and C of this part apply to the marine transfer area for LHG of each active waterfront facility handling LHG.

(e) Sections 127.007 (b), (c), and (d); 127.019(b); and 127.1325(c) of subparts A and C of this part apply to the marine transfer area for LHG of each inactive facility.

[CGD 88–049, 60 FR 39794, Aug. 3, 1995, as amended by USCG–2007–27022, 75 FR 29426, May 26, 2010]

§ 127.003 Incorporation by reference.

(a) Certain material is incorporated by reference into this part with the approval of the Director of the Federal Register in accordance with 5 U.S.C. 552(a) and 1 CFR part 51. To enforce any edition other than that specified in paragraph (b) of this section, the Coast Guard must publish notice of change in the FEDERAL REGISTER and make the material available to the public. All approved material is available for inspection at the U.S. Coast Guard, (CG–543), 2100 2nd St., SW., Stop 7581, Washington, DC 20593–7581, and at the National Archives and Records Administration (NARA). For information on the availability of this material at NARA, call 202–741–6030, or go to: *http://www.archives.gov/federal_register/code_of_federal_regulations/ibr_locations.html*. All approved material is available from the sources indicated in paragraph (b) of this section.

(b) The material approved for incorporation by reference in this part, and the sections affected, are:

THE AMERICAN NATIONAL STANDARDS INSTITUTE (ANSI)	
1430 Broadway, New York, NY 10018:	
ANSI B16.5, Pipe Flanges and Flanged Fittings 1988, including 1992 Addenda and Errata	127.1102
ANSI S12.13, Part I, Performance Requirements, Combustible Gas Detectors, 1986	127.1203
AMERICAN PETROLEUM INSTITUTE (API)	
1220 L Street NW., Washington, DC 20005:	
API RP 2003, Protection Against Ignitions Arising Out of Static, Lightning and Stray Currents, 1991	127.1101
AMERICAN SOCIETY OF MECHANICAL ENGINEERS (ASME)	
Three Park Avenue, New York, NY 10016–5990:	
ASME B31.3, Chemical Plant and Petroleum Refinery Piping, 1993	127.1101
ASTM INTERNATIONAL	
100 Barr Harbor Drive, P.O. Box C700, West Conshohocken, PA 19428–2959, 877–909–2786, *http://www.astm.org*.	
ASTM F1121–87 (Reapproved 2010), Standard Specification for International Shore Connections for Marine Fire Applications, (approved March 1, 2010)	127.611; 127.1511
NATIONAL FIRE PROTECTION ASSOCIATION (NFPA)	
1 Batterymarch Park, Quincy, MA 02269:	
NFPA 10, Portland Fire Extinguishers, 1994	127.603; 127.1503
NFPA 30, Flammable and Combustible Liquids Code, 1993	127.313; 127.1313
NFPA 51B, Fire Prevention in Use of Cutting and Welding Processes, 1994	127.405; 127.1405
NFPA 59A, Production, Storage, and Handling of Liquefied Natural Gas (LNG), 1994	127.101; 127.201; 127.405; 127.603
NFPA 70, National Electrical Code, 1993	127.107; 127.201; 127.1107
NFPA 251, Fire Tests of Building Construction and Materials, 1990	127.005

[CGD 88–049, 60 FR 39794, Aug. 3, 1995; 60 FR 49509, Sept. 26, 1995, as amended by CGD 96–026, 61 FR 33665, June 28, 1996; 61 FR 36629, July 12, 1996; USCG–1999–5832, 64 FR 34714, June 29, 1999; USCG–1999–5151, 64 FR 67175, Dec. 1, 1999; 69 FR 18803, Apr. 9, 2004; USCG–2004–18057, 69 FR 34926, June 23, 2004; USCG–2010–0351, 75 FR 36283, June 25, 2010; USCG–2012–0866, 78 FR 13248, Feb. 27, 2013]

§ 127.005 Definitions.

As used in this part:

Active means accomplishing the transfer of LHG or LNG, or scheduling one to occur, within 12 months of the current date.

Captain of the Port (COTP) means the Coast Guard officer designated by the Commandant to command a Captain of the Port Zone as described in part 3 of this chapter, or an authorized representative.

Commandant means the Commandant of the U.S. Coast Guard or an authorized representative.

Control room means a space within the LNG waterfront facility from which facility operations are controlled.

District Commander means the Coast Guard officer designated by the Commandant to command a Coast Guard District as described in part 3 of this chapter, or an authorized representative.

Environmentally sensitive areas include public parks and recreation areas, wildlife and waterfowl refuges, fishing grounds, wetlands, other areas deemed to be of high value to fish and wildlife resources, historic sites, and other protected areas.

Existing as applied to a waterfront facility means a facility handling LNG constructed or being constructed under a contract awarded before June 2, 1988, or a facility handling LHG constructed or being constructed under a contract awarded before January 30, 1996.

Facility means either a waterfront facility handling LHG or a waterfront facility handling LNG.

Fire endurance rating means the duration for which an assembly or structural unit will contain a fire or retain structural integrity when exposed to the temperatures specified in the standard time-temperature curve in NFPA 251.

Flammable product means a product indicated by the letter ''F'' or by the letters ''F + T'' in Table 127.005.

Inactive means not active.

Impounding space means a space formed by dikes and floors that confines a spill of LHG or LNG.

LHG means liquefied hazardous gas.

LHG vessel means a vessel constructed or converted to carry LHG, in bulk.

Liquefied hazardous gas (LHG) means a liquid containing one or more of the products listed in Table 127.005.

Liquefied natural gas (LNG) means a liquid or semisolid consisting mostly of methane and small quantities of ethane, propane, nitrogen, or other natural gases.

Liquefied petroleum gas (LPG) means a liquid consisting mostly of propane or butane or both.

LNG means liquefied natural gas.

LNG vessel means a vessel constructed or converted to carry LNG, in bulk.

Loading flange means the connection or group of connections in the cargo transfer pipeline on the facility that connects the facility pipeline to the vessel pipeline.

Marine transfer area for LHG means that part of a waterfront facility handling LHG between the vessel, or where the vessel moors, and the first shutoff valve on the pipeline immediately inland of the terminal manifold or loading arm, including the entire part of a pier or wharf used to serve LHG vessels.

Marine transfer area for LNG means that part of a waterfront facility handling LNG between the vessel, or where the vessel moors, and the last manifold or valve immediately before the receiving tanks.

Mating flange means that flange in the product-transfer pipeline on a waterfront facility handling LHG or a waterfront facility handling LNG that connects this pipeline to the pipeline or transfer hose of the vessel.

MAWP means maximum allowable working pressure.

Maximum allowable working pressure (MAWP) means the maximum gauge

pressure permissible at the top of equipment, containers, or pressure vessels while operating at design temperature.

New as applied to a waterfront facility means a facility handling LNG constructed or being constructed under a contract awarded on or after June 2, 1988, or a facility handling LHG constructed or being constructed under a contract awarded on or after January 30, 1996.

Person in charge of transfer operations on the vessel is the person designated the person in charge of cargo transfer under 46 CFR 154.1831.

Release means any spilling, leaking, pumping, pouring, emitting, emptying, discharging, injecting, escaping, leaching, dumping, or disposing into the environment, except a minor release of LHG or its vapor, that may occur during the routine handling of LHG. No release is minor if it creates an atmosphere that exceeds the Lower Flammable Limit (LFL) for a flammable product or any Permissible Exposure Limit (PEL) listed in 29 CFR 1910.1000, Table Z–1 or Z–2, for a toxic product.

Substructure means the deck of a pier or wharf and the structural components below that deck.

Toxic product means a product indicated by the letter ''T'' or by the letters ''F+T'' in Table 127.005.

Waterfront facility handling LHG means any structure on, in, or under the navigable waters of the United States, or any structure on land or any area on shore immediately adjacent to such waters, used or capable of being used to transfer liquefied hazardous gas, in bulk, to or from a vessel.

Waterfront facility handling LNG means any structure on, in, or under the navigable waters of the United States, or any structure on land or any area on shore immediately adjacent to such waters, used or capable of being used to transfer liquefied natural gas, in bulk, to or from a vessel.

TABLE 127.005—LIST OF PRODUCTS AND HAZARDS

Product	Hazard
Acetaldehyde	F+T
Ammonia, anhydrous	T
Butadiene	F
Butanes	F
Butane and propane (mixtures)	F
Butylenes	F
Chlorine	T
Dimethylamine	F+T
Ethane	F
Ethyl chloride	F+T
Ethylene	F
Ethylene oxide	F+T
Methyl-acetylene and propadiene (mixtures)	F
Methyl bromide	F+T
Methyl chloride	F+T
Propane	F
Propylene	F
Sulphur dioxide	T
Vinyl chloride	F+T

NOTE: ''F'' indicates a flammable product. ''T'' indicates a toxic product. ''F+T'' indicates a product both flammable and toxic.

[CGD 78–038, 53 FR 3376, Feb. 7, 1988, as amended by CGD 88–049, 60 FR 39795, Aug. 3, 1995; CGD 97–023, 62 FR 33363, June 19, 1997]

§ 127.007 Letter of intent and waterway suitability assessment.

(a) An owner or operator intending to build a new facility handling LNG or LHG, or an owner or operator planning new construction to expand or modify marine terminal operations in an existing facility handling LNG or LHG, where the construction, expansion, or modification would result in an increase in the size and/or frequency of LNG or LHG marine traffic on the waterway associated with a proposed facility or modification to an existing facility, must submit a Letter of Intent (LOI) to the Captain of the Port (COTP) of the zone in which the facility is or will be located. The LOI must meet the requirements in paragraph (c) of this section.

(1) The owner or operator of an LNG facility must submit the LOI to the COTP no later than the date that the owner or operator files a pre-filing request with the Federal Energy Regulatory Commission (FERC) under 18 CFR parts 153 and 157, but, in all cases, at least 1 year prior to the start of construction.

(2) The owner or operator of an LHG facility must submit the LOI to the COTP no later than the date that the owner or operator files with the Federal or State agency having jurisdiction, but, in all cases, at least 1 year prior to the start of construction.

(b) An owner or operator intending to reactivate an inactive existing facility must submit an LOI that meets paragraph (c) of this section to the COTP of the zone in which the facility is located.

(1) The owner or operator of an LNG facility must submit the LOI to the COTP no later than the date the owner or operator files a pre-filing request with FERC under 18 CFR parts 153 and 157, but, in all cases, at least 1 year prior to the start of LNG transfer operations.

(2) The owner or operator of an LHG facility must submit the LOI to the COTP no later than the date the owner or operator files with the Federal or State agency having jurisdiction, but, in all cases, at least 1 year prior to the start of LHG transfer operations.

(c) Each LOI must contain—

(1) The name, address, and telephone number of the owner and operator;

(2) The name, address, and telephone number of the Federal, State, or local agency having jurisdiction for siting, construction, and operation;

(3) The name, address, and telephone number of the facility;

(4) The physical location of the facility;

(5) A description of the facility;

(6) The LNG or LHG vessels' characteristics and the frequency of LNG or LHG shipments to or from the facility; and

(7) Charts showing waterway channels and identifying commercial, industrial, environmentally sensitive, and residential areas in and adjacent to the waterway used by the LNG or LHG vessels en route to the facility, within at least 25 kilometers (15.5 miles) of the facility.

(d) The owner or operator who submits an LOI under paragraphs (a) or (b) of this section must notify the COTP in writing within 15 days of any of the following:

(1) There is any change in the information submitted under paragraphs (c)(1) through (c)(7) of this section; or

(2) No LNG or LHG transfer operations are scheduled within the next 12 months.

(e) An owner or operator intending to build a new LNG or LHG facility, or an owner or operator planning new construction to expand or modify marine terminal operations in an existing facility handling LNG or LHG, where the construction, expansion, or modification would result in an increase in the size and/or frequency of LNG or LHG marine traffic on the waterway associated with a proposed facility or modification to an existing facility, must file or update as appropriate a waterway suitability assessment (WSA) with the COTP of the zone in which the facility is or will be located. The WSA must consist of a Preliminary WSA and a Follow-on WSA. A COTP may request additional information during review of the Preliminary WSA or Follow-on WSA.

(f) The Preliminary WSA must—

(1) Be submitted to the COTP with the LOI; and

(2) Provide an initial explanation of the following—

(i) Port characterization;

(ii) Characterization of the LNG or LHG facility and LNG or LHG tanker route;

(iii) Risk assessment for maritime safety and security;

(iv) Risk management strategies; and

(v) Resource needs for maritime safety, security, and response.

(g) The Follow-on WSA must—

(1) Be submitted to the COTP as follows:

(i) The owner or operator of an LNG facility must submit the Follow-on WSA to the COTP no later than the date the owner or operator files its application with FERC pursuant to 18 CFR parts 153 or 157, or if no application to FERC is required, at least 180 days before the owner or operator begins transferring LNG.

(ii) The owner or operator of an LHG facility must submit the Follow-on WSA to the COTP in all cases at least 180 days before the owner or operator begins transferring LHG.

(2) Contain a detailed analysis of the elements listed in §§127.007(f)(2), 127.009(d), and 127.009(e) of this part.

(h) Until the facility begins operation, owners or operators must:

(1) Annually review their WSAs and submit a report to the COTP as to whether changes are required. The deadline for the required annual report should coincide with the date of the

COTP's Letter of Recommendation, which indicates review and validation of the Follow-on WSA has been completed.

(2) In the event that revisions to the WSA are needed, report to the COTP the details of the necessary revisions, along with a timeline for completion.

(3) Update the WSA if there are any changes in conditions, such as changes to the port environment, the LNG or LHG facility, or the tanker route, that would affect the suitability of the waterway for LNG or LHG traffic.

(4) Submit a final report to the COTP at least 30 days, but not more than 60 days, prior to the start of operations.

[USCG–2007–27022, 75 FR 29426, May 26, 2010]

§ 127.009 Letter of recommendation.

(a) After the COTP receives the Letter of Intent under § 127.007(a) or (b), the COTP issues a Letter of Recommendation (LOR) as to the suitability of the waterway for LNG or LHG marine traffic to the Federal, State, or local government agencies having jurisdiction for siting, construction, and operation, and, at the same time, sends a copy to the owner or operator, based on the—

(1) Information submitted under § 127.007;

(2) Density and character of marine traffic in the waterway;

(3) Locks, bridges, or other manmade obstructions in the waterway;

(4) Following factors adjacent to the facility such as—

(i) Depths of the water;

(ii) Tidal range;

(iii) Protection from high seas;

(iv) Natural hazards, including reefs, rocks, and sandbars;

(v) Underwater pipelines and cables;

(vi) Distance of berthed vessel from the channel and the width of the channel; and

(5) Any other issues affecting the safety and security of the waterway and considered relevant by the Captain of the Port.

(b) An LOR issued under this section is a recommendation from the COTP to the agency having jurisdiction as described in paragraph (a), and does not constitute agency action for the purposes of § 127.015 or the Administrative Procedure Act (5 U.S.C. 551 *et seq.*).

(c) The owner or operator, or a State, local, or Indian tribal government in the vicinity of the facility, may request reconsideration as set forth in § 127.010.

(d) Persons other than the owner or operator, or State, local, or Indian tribal government in the vicinity of the facility, may comment on the LOR by submitting comments and relevant information to the agency having jurisdiction, as described in paragraph (a), for that agency's consideration in its permitting process.

(e) Paragraphs (c) and (d) of this section apply to LORs issued after December 28, 2012. For LORs issued prior to that date, persons requesting reconsideration must follow the process set forth in § 127.015.

[USCG–2011–0227, 77 FR 70890, Nov. 28, 2012]

§ 127.010 Reconsideration of the Letter of Recommendation.

(a) A person requesting reconsideration pursuant to § 127.009(c) must submit a written request to the Captain of the Port (COTP) who issued the Letter of Recommendation (LOR), and send a copy of the request to the agency to which the LOR was issued. The request must explain why the COTP should reconsider his or her recommendation.

(b) In response to a request described in paragraph (a) of this section, the COTP will do one of the following—

(1) Send a written confirmation of the LOR to the agency to which the LOR was issued, with copies to the person making the request and the owner or operator; or

(2) Revise the LOR, and send the revised LOR to the agency to which the original LOR was issued, with copies to the person making the request and the owner or operator.

(c) A person whose request for reconsideration results in a confirmation as described in paragraph (b)(1) of this section, and who is not satisfied with that outcome, may request, in writing, the opinion of the District Commander of the district in which the LOR was issued.

(1) The request must explain why the person believes the District Commander should instruct the COTP to reconsider his or her recommendation.

(2) A person making a request under paragraph (c) of this section must send a copy of the request to the agency to which the LOR was issued.

(3) In response to the request described in this paragraph (c), the District Commander will do one of the following—

(i) Send a written confirmation of the LOR to the agency to which the LOR was issued, with copies to the person making the request, the owner or operator, and the COTP; or

(ii) Instruct the COTP to reconsider the LOR, and send written notification of that instruction to the agency to which the original LOR was issued, with copies to the person making the request and the owner or operator.

(d) The District Commander's written confirmation described in paragraph (c)(3)(i) of this section ends the reconsideration process with respect to that specific request for reconsideration. If the COTP issues an LOR pursuant to paragraph (b)(2) or (c)(3)(ii) of this section, persons described in § 127.009(c) may request reconsideration of that revised LOR using the process beginning in paragraph (a) of this section.

[USCG–2011–0227, 77 FR 70890, Nov. 28, 2012]

§ 127.011 Inspections of waterfront facilities.

The operator shall ensure that the COTP or his representative is allowed to make reasonable examinations and inspections to determine whether the facility meets this part.

[CGD 78–038, 53 FR 3376, Feb. 7, 1988, as amended by CGD 88–049, 60 FR 39795, Aug. 3, 1995]

§ 127.013 Suspension of transfer operations.

(a) The COTP may issue an order to the operator to suspend LHG or LNG transfer operations if the COTP finds any condition requiring immediate action to—

(1) Prevent damage to, or the destruction of, any bridge or other structure on or in the navigable waters of the United States, or any land structure or shore area immediately adjacent to such waters; and

(2) Protect the navigable waters and the resources therein from harm resulting from vessel or structure damage, destruction, or loss.

(b) Each order to suspend transfer operations issued under paragraph (a) of this section—

(1) Is effective immediately;

(2) Contains a statement of each condition requiring immediate action; and

(3) Is withdrawn by the COTP whenever each condition is corrected or no longer exists.

[CGD 78–038, 53 FR 3376, Feb. 7, 1988, as amended by CGD 88–049, 60 FR 39795, Aug. 3, 1995]

§ 127.015 Appeals.

(a) Any person directly affected by an action taken under this part may request reconsideration by the Coast Guard officer responsible for that action.

(b) Except as provided under paragraph (e) of this section, any person not satisfied with a ruling made under the procedure contained in paragraph (a) of this section may—

(1) Appeal that ruling in writing to the District Commander of the district in which the action was taken; and

(2) Supply supporting documentation and evidence that the appellant wishes to have considered.

(c) The District Commander issues a ruling after reviewing the appeal submitted under paragraph (b) of this section. Except as provided under paragraph (e) of this section, any person not satisfied with this ruling may—

(1) Appeal that ruling in writing to the Assistant Commandant for Marine Safety, Security and Environmental Protection, U.S. Coast Guard, (CG–5), 2100 2nd St., SW., Stop 7355, Washington, DC 20593–7355; and

(2) Supply supporting documentation and evidence that the appellant wishes to have considered.

(d) The Assistant Commandant for Marine Safety, Security and Environmental Protection issues a ruling after reviewing the appeal submitted under paragraph (c) of this section, which is final agency action.

(e) If the delay in presenting a written appeal has an adverse impact on the operations of the appellant, the appeal under paragraph (b) or (c) of this section—

(1) May be presented orally; and

(2) Must be submitted in writing within five days after the oral presentation—

(i) With the basis for the appeal and a summary of the material presented orally; and

(ii) To the same Coast Guard official who heard the oral presentation.

[CGD 78–038, 53 FR 3376, Feb. 7, 1988, as amended by CGD 96–026, 61 FR 33665, June 28, 1996; CGD 97–023, 62 FR 33363, June 19, 1997; USCG–2002–12471, 67 FR 41332, June 18, 2002; USCG–2010–0351, 75 FR 36283, June 25, 2010]

§ 127.017 Alternatives.

(a) The COTP may allow alternative procedures, methods, or equipment standards to be used by an operator instead of any requirements in this part if—

(1) The operator submits a written request for the alternative at least 30 days before facility operations under the alternative would begin, unless the COTP authorizes a shorter time; and

(2) The alternative provides at least the same degree of safety provided by the regulations in this part.

(b) The COTP approves or disapproves any alternative requested under paragraph (a) of this section—

(1) In writing; or

(2) Orally, with subsequent written confirmation.

§ 127.019 Operations Manual and Emergency Manual: Procedures for examination.

(a) The owner or operator of an active existing facility shall submit two copies of the *Operations Manual* and of the *Emergency Manual* to the Captain of the Port of the zone in which the facility is located.

(b) At least 30 days before transferring LHG or LNG, the owner or operator of a new or an inactive existing facility shall submit two copies of the *Operations Manual* and of the *Emergency Manual* to the Captain of the Port of the zone in which the facility is located, unless the manuals have been examined and there have been no changes since that examination.

(c) If the COTP finds that the *Operations Manual* meets § 127.305 or § 127.1305 and that the Emergency Manual meets § 127.307 or § 127.1307, the Captain of the Port returns a copy to the owner or operator marked ''Examined by the Coast Guard''.

(d) If the COTP finds that the *Operations Manual* or the *Emergency Manual* does not meet this part, the Captain of the Port returns the manual with an explanation of why it does not meet this part.

[CGD 78–038, 53 FR 3376, Feb. 7, 1988, as amended by CGD 88–049, 60 FR 39795, Aug. 3, 1995]

Subpart B—Waterfront Facilities Handling Liquefied Natural Gas

§ 127.101 Design and construction: General.

The marine transfer area for LNG must meet the following criteria in NFPA 59A:

(a) Chapter 2, Sections 2–1.2 and 2–3.

(b) Chapter 4, Section 4–1.3.

(c) Chapter 6.

(d) Chapter 7, Sections 7–6 and 7–7.

(e) Chapter 8, except Sections 8–3, 8–5 and 8–7.2.

[CGD 78–038, 53 FR 3376, Feb. 7, 1988, as amended by CGD 88–049, 60 FR 39795, Aug. 3, 1995]

§ 127.103 Piers and wharves.

(a) If the waterfront facility handling LNG is in a region subject to earthquakes, the piers and wharves must be designed to resist earthquake forces.

(b) Substructures, except moorings and breasting dolphins, that support or are within 5 meters (16.4 feet) of any pipe or equipment containing LNG, or are within 15 meters (49.2 feet) of a loading flange, must—

(1) Be made of concrete or steel; and

(2) Have a fire endurance rating of not less than two hours.

(c) LNG or LPG storage tanks must have the minimum volume necessary for—

(1) Surge protection;

(2) Pump suction supply; or

(3) Other process needs.

[CGD 78–038, 53 FR 3376, Feb. 7, 1988, as amended at CGD 88–049, 60 FR 39796, Aug. 3, 1995]

§ 127.105 Layout and spacing of marine transfer area for LNG.

(a) LNG impounding spaces must be located so that the heat flux from a

fire over the impounding spaces does not cause structural damage to an LNG vessel moored or berthed at the waterfront facility handling LNG.

(b) Each LNG loading flange must be located at least 300 meters (984.3 feet) from the following which are primarily intended for the use of the general public or railways:

(1) Each bridge crossing a navigable waterway.

(2) Each entrance to any tunnel under a navigable waterway.

[CGD 78–038, 53 FR 3376, Feb. 7, 1988, as amended by CGD 88–049, 60 FR 39796, Aug. 3, 1995]

§ 127.107 Electrical power systems.

(a) The electrical power system must have a power source and a separate emergency power source, so that failure of one source does not affect the capability of the other source. The system must meet the National Electrical Code, NFPA 70.

(b) The emergency power source must provide enough power for the operation of the—

(1) Emergency shutdown system;

(2) Communications equipment;

(3) Firefighting equipment; and

(4) Emergency lighting.

(c) If an auxiliary generator is used as an emergency power source, it must meet Section 700–12 of NFPA 70.

§ 127.109 Lighting systems.

(a) The marine transfer area for LNG must have a lighting system and separate emergency lighting.

(b) All outdoor lighting must be located or shielded so that it is not confused with any aids to navigation and does not interfere with navigation on the adjacent waterways.

(c) The lighting system must provide an average illumination on a horizontal plane one meter (3.3 feet) above the deck that is—

(1) 54 lux (five foot-candles) at any loading flange; and

(2) 11 lux (one foot-candle) at each work area.

(d) The emergency lighting must provide lighting for the operation of the—

(1) Emergency shutdown system;

(2) Communications equipment; and

(3) Firefighting equipment.

[CGD 78–038, 53 FR 3376, Feb. 7, 1988, as amended by CGD 88–049, 60 FR 39795, Aug. 3, 1995]

§ 127.111 Communications systems.

(a) The marine transfer area for LNG must have a ship-to-shore communication system and a separate emergency ship-to-shore communication system.

(b) Each ship-to-shore communication system must be a dedicated system that allows voice communication between the person in charge of transfer operations on the vessel, the person in charge of shoreside transfer operations, and personnel in the control room.

[CGD 78–038, 53 FR 3376, Feb. 7, 1988, as amended by CGD 88–049, 60 FR 39795, Aug. 3, 1995]

§ 127.113 Warning signs.

(a) The marine transfer area for LNG must have warning signs that—

(1) Meet paragraph (b) of this section;

(2) Can be seen from the shore and the water; and

(3) Have the following text:

Warning
Dangerous Cargo
No Visitors
No Smoking
No Open Lights

(b) Each letter in the words on the sign must be—

(1) Block style;

(2) Black on a white background; and

(3) 7.6 centimeters (3 inches) high.

[CGD 78–038, 53 FR 3376, Feb. 7, 1988, as amended by CGD 88–049, 60 FR 39796, Aug. 3, 1995]

EQUIPMENT

§ 127.201 Sensing and alarm systems.

(a) Fixed sensors must have audio and visual alarms in the control room and audio alarms nearby.

(b) Fixed sensors that continuously monitor for LNG vapors must—

(1) Be in each enclosed area where vapor or gas may accumulate; and

(2) Meet Section 9–4 of NFPA 59A.

(c) Fixed sensors that continuously monitor for flame, heat, or products of combustion must—

(1) Be in each enclosed or covered Class I, Division 1, hazardous location defined in Section 500–5(a) of NFPA 70 and each area in which flammable or combustible material is stored; and

(2) Meet Section 9–4 of NFPA 59A.

§ 127.203 Portable gas detectors.

The marine transfer area for LNG must have at least two portable gas detectors capable of measuring 0–100% of the lower flammable limit of methane.

[CGD 78–038, 53 FR 3376, Feb. 7, 1988, as amended by CGD 88–049, 60 FR 39796, Aug. 3, 1995]

§ 127.205 Emergency shutdown.

Each transfer system must have an emergency shutdown system that—

(a) Can be activated manually; and

(b) Is activated automatically when the fixed sensors under § 127.201(b) measure LNG concentrations exceeding 40% of the lower flammable limit.

§ 127.207 Warning alarms.

(a) The marine transfer area for LNG must have a rotating or flashing amber light with a minimum effective flash intensity, in the horizontal plane, of 5000 candelas. At least 50% of the required effective flash intensity must be maintained in all directions from 1.0 degree above to 1.0 degree below the horizontal plane.

(b) The marine transfer area for LNG must have a siren with a minimum ⅓-octave band sound pressure level at 1 meter of 125 decibels referenced to 0.0002 microbars. The siren must be located so that the sound signal produced is audible over 360 degrees in a horizontal plane.

(c) Each light and siren must be located so that the warning alarm is not obstructed for a distance of 1.6 km (1 mile) in all directions.

[CGD 78–038, 53 FR 3376, Feb. 7, 1988, as amended by CGD 88–049, 60 FR 39796, Aug. 3, 1995]

OPERATIONS

§ 127.301 Persons in charge of shoreside transfer operations: Qualifications and certification.

(a) No person may serve, and the operator of the waterfront facility handling LNG may not use the services of any person, as a person in charge of shoreside transfer operations, unless that person—

(1) Has at least 48 hours of LNG transfer experience;

(2) Knows the hazards of LNG;

(3) Knows the rules of this subpart; and

(4) Knows the procedures in the examined *Operations Manual* and the examined *Emergency Manual*.

(b) Before a person in charge of shoreside transfer operations supervises a transfer, the operator shall certify in writing that the criteria in paragraph (a) of this section are met. The operator shall maintain a copy of each current certification available for inspection at the waterfront facility handling LNG.

[CGD 78–038, 53 FR 3376, Feb. 7, 1988, as amended by CGD 88–049, 60 FR 39796, Aug. 3, 1995]

§ 127.303 Compliance with suspension order.

If an order to suspend is given to the operator or owner of the waterfront facility handling LNG, no LNG transfer operations may be conducted at the facility until the order is withdrawn by the COTP.

[CGD 78–038, 53 FR 3376, Feb. 7, 1988, as amended by CGD 88–049, 60 FR 39796, Aug. 3, 1995]

§ 127.305 Operations Manual.

Each *Operations Manual* must contain—

(a) A description of the transfer system including mooring areas, transfer connections, control rooms, and diagrams of the piping and electrical systems;

(b) The duties of each person assigned for transfer operations;

(c) The maximum relief valve setting or maximum allowable working pressure of the transfer system;

(d) The facility telephone numbers of facility supervisors, persons in charge of shoreside transfer operations, personnel on watch in the marine transfer area for LNG, and security personnel;

(e) A description of the security systems for the marine transfer area for LNG;

(f) The procedures for—

(1) Transfer operations including gauging, cool down, pumping, venting, and shutdown;

(2) Transfer operations start-up and shutdown;

(3) Security violations; and

(4) The communications systems; and

(g) A description of the training programs established under § 127.503.

[CGD 78–038, 53 FR 3376, Feb. 7, 1988, as amended by CGD 88–049, 60 FR 39796, Aug. 3, 1995]

§ 127.307 Emergency Manual.

Each *Emergency Manual* must contain—

(a) LNG release response procedures, including contacting local response organizations;

(b) Emergency shutdown procedures;

(c) A description of the fire equipment and systems and their operating procedures;

(d) A description of the emergency lighting and emergency power systems;

(e) The telephone numbers of local Coast Guard units, hospitals, fire departments, police departments, and other emergency response organizations;

(f) If the waterfront facility handling LNG has personnel shelters, the location of and provisions in each shelter;

(g) First aid procedures and if there are first aid stations, the locations of each station; and

(h) Emergency procedures for mooring and unmooring a vessel.

[CGD 78–038, 53 FR 3376, Feb. 7, 1988, as amended by CGD 88–049, 60 FR 39796, Aug. 3, 1995]

§ 127.309 Operations Manual and Emergency Manual: Use.

The operator shall ensure that—

(a) LNG transfer operations are not conducted unless the waterfront facility handling LNG has an examined *Operations Manual* and examined *Emergency Manual;*

(b) Each transfer operation is conducted in accordance with the examined *Operations Manual;* and

(c) Each emergency response is in accordance with the examined *Emergency Manual*.

[CGD 78–038, 53 FR 3376, Feb. 7, 1988, as amended by CGD 88–049, 60 FR 39796, Aug. 3, 1995]

§ 127.311 Motor vehicles.

(a) The operator shall designate and mark parking spaces that—

(1) Do not block fire lanes;

(2) Do not impede any exits;

(3) Are not located in any impounding space; and

(4) Are not within 15 meters (49.2 feet) of any storage tank or loading flange.

(b) During transfer operations, no person may—

(1) Stop or park a motor vehicle in a space that is not designated a parking space; or

(2) Refuel any motor vehicle.

§ 127.313 Bulk storage.

(a) The operator shall ensure that only the following flammable materials are stored in the marine transfer area for LNG:

(1) LNG.

(2) LPG.

(3) Vessel fuel.

(4) Oily waste from vessels.

(5) Solvents, lubricants, paints, and other fuels in the amount used for one day's operations and maintenance.

(b) Flammable liquids must be stored in accordance with Chapter 4 of NFPA 30.

[CGD 78–038, 53 FR 3376, Feb. 7, 1988, as amended by CGD 88–049, 60 FR 39796, Aug. 3, 1995]

§ 127.315 Preliminary transfer inspection.

Before transferring LNG, the person in charge of shoreside transfer operations shall—

(a) Inspect the transfer piping and equipment to be used during the transfer and replace any worn or inoperable parts;

(b) For each of the vessel's cargo tanks from which cargo will be transferred, note the pressure, temperature, and volume to ensure they are safe for transfer;

(c) Review and agree with the person in charge of cargo transfer on the vessel to—

(1) The sequence of transfer operations;

(2) The transfer rate;

(3) The duties, location, and watches of each person assigned for transfer operations; and

(4) Emergency procedures from the examined *Emergency Manual;*

(d) Ensure that transfer connections allow the vessel to move to the limits of its moorings without placing strain on the loading arm or transfer piping system;

(e) Ensure that each part of the transfer system is aligned to allow the flow of LNG to the desired location;

(f) Ensure that warning signs that warn that LNG is being transferred, are displayed;

(g) Eliminate all ignition sources in the marine transfer area for LNG;

(h) Ensure that personnel are on duty in accordance with the examined *Operations Manual;* and

(i) Test the following to determine that they are operable:

(1) The sensing and alarm systems.

(2) The emergency shutdown system.

(3) The communication systems.

[CGD 78–038, 53 FR 3376, Feb. 7, 1988, as amended by CGD 88–049, 60 FR 39796, Aug. 3, 1995]

§ 127.317 Declaration of inspection.

(a) After the preliminary transfer inspection under § 127.315 has been satisfactorily completed, the person in charge of shoreside transfer operations shall ensure that no person transfers LNG until a Declaration of Inspection that meets paragraph (c) of this section is executed and signed in duplicate.

(b) The person in charge of shoreside transfer operations shall give one signed copy of the Declaration of Inspection to the person in charge of transfer operations on the vessel, and shall retain one signed copy at the waterfront facility handling LNG for 30 days after completion of the transfer.

(c) Each Declaration of Inspection must contain—

(1) The name of the vessel and the waterfront facility handling LNG;

(2) The date and time that transfer operations begin;

(3) A list of the requirements in § 127.315 with the initials of the person in charge of shoreside transfer operations after each requirement, indicating that the requirement is met;

(4) The signature of the person in charge of shoreside transfer operations and the date and time of signing, indicating that he or she is ready to begin transfer operations; and

(5) The signature of each relief person in charge and the date and time of each relief.

[CGD 78–038, 53 FR 3376, Feb. 7, 1988, as amended by CGD 88–049, 60 FR 39796, Aug. 3, 1995]

§ 127.319 LNG transfer.

During LNG transfer operations, the following must be met:

(a) The operator of the waterfront facility handling LNG shall ensure that—

(1) The marine transfer area for LNG is under the supervision of a person in charge, who has no other assigned duties during the transfer operation;

(2) Personnel transferring fuel or oily waste are not involved in LNG transfer; and

(3) No vessels are moored outboard of any LNG vessel without the permission of the COTP.

(b) The person in charge of shoreside transfer operations shall—

(1) Be in continuous communication with the person in charge of transfer operations on the vessel;

(2) Ensure that an inspection of the transfer piping and equipment for leaks, frost, defects, and other symptoms of safety and operational problems is conducted at least once every transfer;

(3) Ensure that transfer operations are discontinued—

(i) Before electrical storms or uncontrolled fires are adjacent to the marine transfer area for LNG; and

(ii) As soon as a fire is detected; and

(4) Ensure that the lighting systems are turned on between sunset and sunrise.

NOTE: Vessel transfer requirements are published in 46 CFR Part 154.

[CGD 78–038, 53 FR 3376, Feb. 7, 1988, as amended by CGD 88–049, 60 FR 39796, Aug. 3, 1995]

§ 127.321 Release of LNG.

(a) The operator of the waterfront facility handling LNG shall ensure that—

(1) No person releases LNG into the navigable waters of the United States; and

(2) If there is a release of LNG, vessels near the facility are notified of the

release by the activation of the warning alarm.

(b) If there is a release of LNG, the person in charge of shoreside transfer operations shall—

(1) Immediately notify the person in charge of cargo transfer on the vessel of the intent to shutdown;

(2) Shutdown transfer operations;

(3) Notify the COTP of the release; and

(4) Not resume transfer operations until authorized by the COTP.

[CGD 78–038, 53 FR 3376, Feb. 7, 1988, as amended by CGD 88–049, 60 FR 39796, Aug. 3, 1995]

MAINTENANCE

§ 127.401 Maintenance: General.

The operator of the waterfront facility handling LNG shall ensure that the equipment required under this part is maintained in a safe condition so that it does not cause a release or ignition of LNG.

[CGD 78–038, 53 FR 3376, Feb. 7, 1988, as amended by CGD 88–049, 60 FR 39796, Aug. 3, 1995]

§ 127.403 Inspections.

The operator shall conduct a visual inspection for defects of each pressure-relief device not capable of being tested, at least once each calendar year, with intervals between inspections not exceeding 15 months, and make all repairs in accordance with § 127.405.

§ 127.405 Repairs.

The operator shall ensure that—

(a) Equipment repairs are made so that—

(1) The equipment continues to meet the applicable requirements in this subpart and in NFPA 59A; and

(2) Safety is not compromised; and

(b) Welding is done in accordance with NFPA 51B and NFPA 59A, Chapter 6, Section 6–3.4.

[CGD 78–038, 53 FR 3376, Feb. 7, 1988, as amended by CGD 88–049, 60 FR 39796, Aug. 3, 1995]

§ 127.407 Testing.

(a) The operator shall pressure test under paragraph (b) of this section the transfer system, including piping, hoses, and loading arms, and verify the set pressure of the safety and relief valves—

(1) After the system or the valves are altered;

(2) After the system or the valves are repaired;

(3) After any increase in the MAWP; or

(4) For those components that are not continuously kept at cryogenic temperature, at least once each calendar year, with intervals between testing not exceeding 15 months.

(b) The pressure for the transfer system test under paragraph (a) of this section must be at 1.1 times the MAWP and be held for a minimum of 30 minutes.

§ 127.409 Records.

(a) The operator shall keep on file the following information:

(1) A description of the components tested under § 127.407.

(2) The date and results of the test under § 127.407.

(3) A description of any corrective action taken after the test.

(b) The information required by this section must be retained for 24 months.

PERSONNEL TRAINING

§ 127.501 Applicability.

The training required by this subpart must be completed before LNG is transferred.

§ 127.503 Training: General.

The operator shall ensure that each of the following is met:

(a) All full-time employees have training in the following subjects:

(1) Basic LNG firefighting procedures.

(2) LNG properties and hazards.

(b) In addition to the training under paragraph (a) of this section, each person assigned for transfer operations has training in the following subjects:

(1) The examined *Operations Manual* and examined *Emergency Manual*.

(2) Advanced LNG firefighting procedures.

(3) Security violations.

(4) LNG vessel design and cargo transfer operations.

(5) LNG release response procedures.

(6) First aid procedures for—

(i) Frostbite;

(ii) Burns;

(iii) Cardio-pulminary resuscitation; and

(iv) Transporting injured personnel.

(c) The personnel who received training under paragraphs (a) and (b) of this section receive refresher training in the same subjects at least once every five years.

FIREFIGHTING

§ 127.601 Fire equipment: General.

(a) Fire equipment and systems provided in addition to the requirements in this subpart must meet the requirements of this subpart.

(b) The following must be red or some other conspicuous color and be in locations that are readily accessible:

(1) Hydrants and standpipes.

(2) Hose stations.

(3) Portable fire extinguishers.

(4) Fire monitors.

(c) Fire equipment, if applicable, must bear the approval of Underwriters Laboratories, Inc., the Factory Mutual Research Corp., or the Coast Guard.

§ 127.603 Portable fire extinguishers.

Each marine transfer area for LNG must have—

(a) Portable fire extinguishers that meet 9–6.1 of NFPA 59A and Chapter 3 of NFPA 10; and

(b) At least one portable fire extinguisher in each designated parking area.

[CGD 78–038, 53 FR 3376, Feb. 7, 1988, as amended by CGD 88–049, 60 FR 39796, Aug. 3, 1995]

§ 127.605 Emergency outfits.

(a) There must be an emergency outfit for each person whose duties include fighting fires, but there must be at least two emergency outfits. Each emergency outfit must include—

(1) One explosion-proof flashlight;

(2) Boots and gloves of rubber or other electrically nonconducting material;

(3) A rigid helmet that protects the head against impact;

(4) Water resistant clothing that also protects the body against fire; and

(5) U.S. Bureau of Mines approved self-contained breathing apparatus.

(b) Emergency outfits under paragraph (a) of this section must be in locations that are readily accessible and marked for easy recognition.

§ 127.607 Fire main systems.

(a) Each marine transfer area for LNG must have a fire main system that provides at least two water streams to each part of the LNG transfer piping and connections, one of which must be from a single length of hose or from a fire monitor.

(b) The fire main must have at least one isolation valve at each branch connection and at least one isolation valve downstream of each branch connection to isolate damaged sections.

(c) The fire main system must have the capacity to supply—

(1) Simultaneously all fire hydrants, standpipes, and fire monitors in the system; and

(2) At a Pitot tube pressure of 618 kilonewtons per square meter (75 p.s.i.), the two outlets having the greatest pressure drop between the source of water and the hose or monitor nozzle, when only those two outlets are open.

(d) If the source of water for the fire main system is capable of supplying a pressure greater than the system's design working pressure, the system must have at least one pressure relief device.

(e) Each fire hydrant or standpipe must have at least one length of hose of sufficient length to meet paragraph (a) of this section.

(f) Each length of hose must—

(1) Be 1½ inches or more in diameter and 30.5 meters (100 feet) or less in length;

(2) Be on a hose rack or reel;

(3) Be connected to the hydrant or standpipe at all times; and

(4) Have a Coast Guard approved combination solid stream and water spray fire hose nozzle.

[CGD 78–038, 53 FR 3376, Feb. 7, 1988, as amended at CGD 88–049, 60 FR 39796, Aug. 3, 1995]

§ 127.609 Dry chemical systems.

(a) Each marine transfer area for LNG must have a dry chemical system

that provides at least two dry chemical discharges to the area surrounding the loading arms, one of which must be—

(1) From a monitor; and

(2) Actuated and, except for preaimed monitors, controlled from a location other than the monitor location.

(b) The dry chemical system must have the capacity to supply simultaneously or sequentially each hose or monitor in the system for 45 seconds.

(c) Each dry chemical hose station must have at least one length of hose that—

(1) Is on a hose rack or reel; and

(2) Has a nozzle with a valve that starts and stops the flow of dry chemical.

[CGD 78–038, 53 FR 3376, Feb. 7, 1988, as amended at CGD 88–049, 60 FR 39796, Aug. 3, 1995]

§ 127.611 International shore connection.

The marine transfer area for LNG must have an international shore connection that is in accordance with ASTM F 1121 (incorporated by reference, see § 127.003), a 2½ inch fire hydrant, and 2½ inch fire hose of sufficient length to connect the fire hydrant to the international shore connection on the vessel.

[CGD 88–032, 56 FR 35819, July 29, 1991, as amended by CGD 88–049, 60 FR 39796, Aug. 3, 1995; USCG–2000–7223, 65 FR 40057, June 29, 2000]

§ 127.613 Smoking.

In the marine transfer area for LNG, the operator shall ensure that no person smokes when there is LNG present.

[CGD 78–038, 53 FR 3376, Feb. 7, 1988, as amended at CGD 88–049, 60 FR 39796, Aug. 3, 1995]

§ 127.615 Fires.

In the marine transfer area for LNG, the operator shall ensure that there are no fires when there is LNG present.

[CGD 78–038, 53 FR 3376, Feb. 7, 1988, as amended at CGD 88–049, 60 FR 39796, Aug. 3, 1995]

§ 127.617 Hotwork.

The operator shall ensure that no person conducts welding, torch cutting, or other hotwork unless that person has a permit from the COTP.

SECURITY

§ 127.701 Security on existing facilities.

The operator shall ensure that any security procedure and arrangement on existing facilities, that were in use when LNG transfer operations were last conducted, be continued and maintained, or upgraded, whenever LNG transfer operations are conducted.

§ 127.703 Access to the marine transfer area for LNG.

The operator shall ensure that—

(a) Access to the marine transfer area for LNG from the shoreside and the waterside is limited to—

(1) Personnel who work at the waterfront facility handling LNG including persons assigned for transfer operations, vessel personnel, and delivery and service personnel in the course of their business;

(2) Coast Guard personnel; and

(3) Other persons authorized by the operator; and

(b) No person is allowed into the marine transfer area for LNG unless that person is identified by a waterfront facility handling LNG-issued identification card or other identification card displaying his or her photograph, or is an escorted visitor displaying an identifying badge.

[CGD 78–038, 53 FR 3376, Feb. 7, 1988, as amended by CGD 88–049, 60 FR 39796, Aug. 3, 1995]

§ 127.705 Security systems.

The operator shall ensure that security patrols of the marine transfer area for LNG are conducted once every hour, or that a manned television monitoring system is used, to detect—

(a) Unauthorized personnel;

(b) Fires; and

(c) LNG releases.

[CGD 78–038, 53 FR 3376, Feb. 7, 1988, as amended by CGD 88–049, 60 FR 39796, Aug. 3, 1995]

§ 127.707 Security personnel.

The operator shall ensure that no person is assigned security patrol duty

unless that person has been instructed on security violation procedures.

§ 127.709 Protective enclosures.

The following must be within a fence or wall that prevents trespassing:

(a) Impounding spaces.

(b) Control rooms and stations.

(c) Electrical power sources.

§ 127.711 Communications.

The marine transfer area for LNG must have a means of direct communications between the security patrol and other operating or security personnel on duty on the waterfront facility handling LNG.

[CGD 78–038, 53 FR 3376, Feb. 7, 1988, as amended by CGD 88–049, 60 FR 39796, Aug. 3, 1995]

Subpart C—Waterfront Facilities Handling Liquefied Hazardous Gas

SOURCE: CGD 88–049, 60 FR 39796, Aug. 3, 1995, unless otherwise noted.

DESIGN AND CONSTRUCTION

§ 127.1101 Piping systems.

Each piping system within the marine transfer area for LHG used for the transfer of LHG must meet the following criteria:

(a) Each system must be designed and constructed in accordance with ASME B31.3.

(b) Each pipeline on a pier or wharf must be located so that it is not exposed to physical damage from vehicular traffic or cargo-handling equipment. Each pipeline under navigable waters must be covered or protected to meet 49 CFR 195.248.

(c) The transfer manifold of each liquid transfer line and of each vapor return line must have an isolation valve with a bleed connection, such that transfer hoses and loading arms can be blocked off, drained or pumped out, and depressurized before disconnecting. Bleeds or vents must discharge to a safe area such as a tank or flare.

(d) In addition to the isolation valve at the transfer manifold, each liquid-transfer line and each vapor return line must have a readily accessible isolation valve located near the edge of the marine transfer area for LHG.

(e) Each power-operated isolation valve must be timed to close so that it will not produce a hydraulic shock capable of causing failure of the line or equipment. Unless the layout of the piping allows the isolation valve at the transfer manifold to close within 30 seconds without creating excessive stresses on the system, the layout must be reconfigured to reduce the stresses to a safe level.

(f) Each waterfront facility handling LHG that transfers to or from a vessel requiring vapor return during transfer must be equipped with a vapor return line designed to attach to the vessel's vapor connection.

(g) Where two or more LHGs are loaded or unloaded at the same facility, each manifold must be identified or marked to indicate each LHG it handles.

(h) Each pipeline used to transfer flammable liquids or vapors must be provided with precautions against static, lightning, and stray current in accordance with API RP 2003.

§ 127.1102 Transfer hoses and loading arms.

(a) Each hose within the marine transfer area for LHG used for the transfer of LHG or its vapors to or from a vessel must—

(1) Be made of materials resistant to each LHG transferred, in both the liquid and vapor state (if wire braid is used for reinforcement, the wire must be of corrosion-resistant material, such as stainless steel);

(2) Be constructed to withstand the temperature and pressure foreseeable during transfer, with a MAWP not less than the maximum pressure to which it may be subjected and at least 1030 kPa gauge (149.4 psig);

(3) Be designed for a minimum bursting pressure of a least five times the MAWP;

(4) Have—

(i) Full-threaded connections;

(ii) Flanges that meet ANSI B16.5; or

(iii) Quick connect couplings that are acceptable to the Commandant;

(5) Be adequately supported against the weight of its constituent parts, the LHG, and any ice formed on it;

(6) Have no kinks, bulges, soft spots, or other defects that will let it leak or burst under normal working pressure; and

(7) Have a permanently attached nameplate that indicates, or otherwise be permanently marked to indicate—

(i) Each LHG for which it is suitable;

(ii) Its MAWP at the corresponding service temperature; and

(iii) If used for service at other than ambient temperature, its minimum service temperature.

(b) Each loading arm used for the transfer of LHG or its vapor must—

(1) Be made of materials resistant to each LHG transferred, in both the liquid and vapor state;

(2) Be constructed to withstand the temperature and pressure foreseeable during transfer;

(3) Be adequately supported against the weight of its constituent parts, the LHG, and any ice formed on it;

(4) Be provided with an alarm to indicate when it is approaching the limits of its extension, unless the examined Operations Manual requires a person to perform the same function; and

(5) Have a permanently attached nameplate that indicates, or otherwise be permanently marked to indicate—

(i) Each LHG it may handle;

(ii) Its MAWP at the corresponding service temperature; and,

(iii) If it is used for service at other than ambient temperature, its minimum service temperature.

§ 127.1103 Piers and wharves.

(a) Each new waterfront facility handling LHG, and all new construction in the marine transfer area for LHG of each existing facility, must comply with the standards for seismic design and construction in 49 CFR part 41.

(b) Each substructure on a new waterfront facility handling LHG, and all new construction in the marine transfer area for LHG of each existing facility, except moorings and breasting dolphins, that supports or is within 4.5 meters (14.8 feet) of any pipe or equipment containing a flammable LHG, or that is within 15 meters (49.2 feet) of a loading flange used to transfer a flammable LHG, must have a fire-endurance rating of not less than two hours.

§ 127.1105 Layout and spacing of marine transfer area for LHG.

Each new waterfront facility handling LHG, and all new construction in the marine transfer area for LHG of each existing facility, must comply with the following:

(a) Each building, shed, and other structure within each marine transfer area for LHG must be located, constructed, or ventilated to prevent the accumulation of flammable or toxic gases within the structure.

(b) Each impounding space for flammable LHGs located within the area must be designed and located so that the heat flux from a fire over the impounding space does not cause, to a vessel, damage that could prevent the vessel's movement.

(c) Each manifold, loading arm, or independent mating flange must be located at least 60 meters (197 feet) from each of the following structures, if that structure is intended primarily for the use of the general public or of railways:

(1) A bridge crossing a navigable waterway.

(2) The entrance to, or the superstructure of, a tunnel under a navigable waterway.

(d) Each manifold, loading arm, or independent mating flange must be located at least 30 meters (98.5 feet) from each public roadway or railway.

§ 127.1107 Electrical systems.

Electrical equipment and wiring must be of the kind specified by, and must be installed in accordance with, NFPA 70.

§ 127.1109 Lighting systems.

(a) Each waterfront facility handling LHG, at which transfers of LHG take place between sunset and sunrise, must have outdoor lighting that illuminates the marine transfer area for LHG.

(b) All outdoor lighting must be located or shielded so that it cannot be mistaken for any aids to navigation and does not interfere with navigation on the adjacent waterways.

(c) The outdoor lighting must provide a minimum average illumination on a horizontal plane 1 meter (3.3 feet) above the walking surface of the marine transfer area that is—

(1) 54 lux (5 foot-candles) at any loading flange; and

(2) 11 lux (1 foot-candle) for the remainder of the marine transfer area for LHG.

§ 127.1111 Communication systems.

(a) The marine transfer area for LHG must possess a communication system that enables continuous two way voice communication between the person in charge of transfer aboard the vessel and the person in charge of transfer for the facility.

(b) The communication system required by paragraph (a) of this section may consist either of fixed or portable telephones or of portable radios. The system must be usable and effective in all phases of the transfer and all weather at the facility.

(c) Devices used to comply with paragraph (a) of this section during the transfer of a flammable LHG must be listed as intrinsically safe by Underwriters Laboratories, Inc., Factory Mutual Research Corporation, or other independent laboratory recognized by NFPA, for use in the hazardous location in which it is used.

§ 127.1113 Warning signs.

(a) The marine transfer area for LHG must have warning signs that—

(1) Meet paragraph (b) of this section;

(2) Can be seen from the shore and the water; and,

(3) Except as provided in paragraph (c) of this section, bear the following text:

Warning
Dangerous Cargo
No visitors
No Smoking
No Open Lights

(b) Each letter on the sign must be—

(1) In block style;

(2) Black on a white background; and

(3) At least 7.6 centimeters (3 inches) high.

(c) The words ''No Smoking'' and ''No Open Lights'' may be omitted when the product being transferred is not flammable.

EQUIPMENT

§ 127.1203 Gas detection.

(a) Each waterfront facility handling LHG that transfers a flammable LHG must have at least two portable gas detectors, or a fixed gas detector, in the marine transfer area for LHG. Each detector must be capable of indicating whether the concentration of flammable vapors exceeds 30% of the Lower Flammable Limit for each flammable product being transferred and must meet ANSI S12.13, Part I.

(b) Each waterfront facility handling LHG that transfers a toxic LHG, other than anhydrous ammonia, must have at least two portable gas detectors, or a fixed gas detector, available in the area. The detectors must be capable of showing whether the concentration of each toxic LHG being transferred is above, at, or below any Permissible Exposure Limit listed in 29 CFR 1910.1000, Table Z–1 or Z–2.

(c) Each gas detector required by paragraph (a) or (b) of this section must serve to detect leaks, check structures for gas accumulations, and indicate workers' exposure to toxic gases in the area.

[CGD 88–049, 60 FR 39797, Aug. 3, 1995; 60 FR 49509, Sept. 26, 1995]

§ 127.1205 Emergency shutdown.

(a) Each piping system used to transfer LHG or its vapors to or from a vessel must have a quick-closing shutoff valve to stop the flow of liquid and vapor from the waterfront facility handling LHG if a transfer hose or loading arm fails. This valve may be the isolation valve with a bleed connection required by § 127.1101(c).

(b) The valve required by paragraph (a) of this section must be located as near as practicable to the terminal manifold or loading-arm connection and must—

(1) Close on loss of power;

(2) Close from the time of activation in 30 seconds or less;

(3) Be capable of local manual closing and remotely controlled closing; and,

(4) If the piping system is used to transfer a flammable LHG, either have fusible elements that melt at less than

105 °C (221 °F) and activate the emergency shutdown, or have a sensor that performs the same function.

(c) A remote actuator for each valve must be located in a place accessible in an emergency, at least 15 meters (49.2 feet) from the terminal manifold or loading arm, and conspicuously marked with its designated function. When activated, the actuator must also automatically shut down any terminal pumps or compressors used to transfer LHG, or its vapors, to or from the vessel.

[CGD 88–049, 60 FR 39797, Aug. 3, 1995; 60 FR 49509, Sept. 26, 1995]

§ 127.1207 Warning alarms.

(a) Each marine transfer area for LHG must have a rotating or flashing amber light that is visible for at least 1,600 meters (1 mile) from the transfer connection in all directions.

(b) Each marine transfer area for LHG must also have a siren that is audible for at least 1,600 meters (1 mile) from the transfer connection in all directions.

(c) Each light and siren required by this section must be located so as to minimize obstructions. If any obstruction will prevent any of these alarms from meeting paragraph (a) or (b) of this section, the operator of the waterfront facility handling LHG shall propose for approval by the local COTP additional or alternative warning devices that provide an equivalent level of safety.

[CGD 88–049, 60 FR 39798, Aug. 3, 1995; 60 FR 49509, Sept. 26, 1995]

§ 127.1209 Respiratory protection.

Each waterfront facility handling LHG must provide equipment for respiratory protection for each employee of the facility in the marine transfer area for LHG during the transfer of one or more of the following toxic LHGs; anhydrous ammonia, chlorine, dimethylamine, ethylene oxide, methyl bromide, sulphur dioxide, or vinyl chloride. The equipment must protect the wearer from the LHG's vapor for at least 5 minutes.

OPERATIONS

§ 127.1301 Persons in charge of transfers for the facility: Qualifications and certification.

(a) No person may serve, or use the services of any person, as a person in charge of transfers for the facility regulated under this subpart, unless that person—

(1) Has at least 48 hours' transfer experience with each LHG being transferred;

(2) Knows the hazards of each LHG being transferred;

(3) Knows the rules of this subpart; and

(4) Knows the procedures in the examined Operations Manual and the examined Emergency Manual.

(b) Before a person in charge of transfers for a waterfront facility handling LHG supervises a transfer of LHG, the operator of the facility shall certify in writing that that person has met the requirements in paragraph (a) of this section. The operator shall ensure that a copy of each current certification is available for inspection at the facility.

[CGD 88–049, 60 FR 39798, Aug. 3, 1995; 60 FR 49509, Sept. 26, 1995]

§ 127.1302 Training.

(a) Each operator of a waterfront facility handling LHG shall ensure that each person assigned to act as a person in charge of transfers for the facility has training in the following subjects:

(1) Properties and hazards of each LHG being transferred to or from the facility.

(2) Use of the gas detectors required by § 127.1203.

(3) Use of the equipment for respiratory protection required by § 127.1209.

(4) Basic firefighting procedures, including the use of the portable fire extinguishers required by § 127.1503.

(5) Content and use of the examined Operations Manual and examined Emergency Manual.

(6) The configuration and limitations of cargo systems of LHG vessels.

(7) Procedures for transferring LHG to and from LHG vessels.

(8) Procedures for response to a release of the LHG handled by the facility.

(9) First aid for persons—

(i) With burns;

(ii) Needing cardio-pulmonary resuscitation;

(iii) Exposed to toxic liquid or toxic vapors (if a toxic LHG is handled by the facility); and

(iv) Needing transport to a medical facility.

(10) Restrictions on access to the marine transfer area for LHG.

(b) Each person that receives training under paragraph (a) of this section shall receive refresher training in the same subjects at least once every 5 years.

(c) The operator shall maintain, for each person trained, a record of all training provided under paragraphs (a) and (b) of this section. The operator shall retain these records for the duration of the person's employment on the waterfront facility plus 12 months.

(d) Training conducted to comply with the hazard communication programs required by the Occupational Safety and Health Administration (OSHA) of the Department of Labor [29 CFR 1910.120] or the Environmental Protection Agency (EPA) [40 CFR 311.1] may be used to satisfy the requirements in paragraph (a) of this section, so far as the training addresses the requirements in paragraph (a) of this section.

§ 127.1303 Compliance with suspension order.

If the COTP issues to the owner or operator of a waterfront facility handling LHG an order to suspend a transfer, no transfer may take place at the facility until the COTP withdraws the order.

§ 127.1305 Operations Manual.

Each Operations Manual must contain—

(a) A description of each liquid-transfer system and vapor transfer system, including each mooring area, transfer connection, and (where installed) control room, and a diagram of the piping and electrical systems;

(b) The duties of each person assigned to transfers;

(c) The maximum relief-valve setting or MAWP of the transfer system;

(d) The telephone numbers of supervisors, persons in charge of transfers for the facility, persons on watch in the marine transfer area for LHG, and security personnel of the facility;

(e) A description for each security system provided for the transfer area;

(f) A description of the training programs established under § 127.1302;

(g) The procedures to follow for security violations; and

(h) For each LHG handled, the procedures for transfer that include—

(1) Requirements for each aspect of the transfer (start-up, gauging, cooldown, pumping, venting, and shutdown);

(2) The maximum transfer rate;

(3) The minimum transfer temperature;

(4) Requirements for firefighting equipment; and

(5) Communication procedures.

§ 127.1307 Emergency Manual.

(a) Each Emergency Manual must contain—

(1) For each LHG handled—

(i) A physical description of the LHG;

(ii) A description of the hazards of the LHG;

(iii) First-aid procedures for persons exposed to the LHG or its vapors;

(iv) The procedures for response to a release of the LHG; and,

(v) If the LHG is flammable, the procedures for fighting a fire involving the LHG or its vapors;

(2) A description of the emergency shutdown required by § 127.1205;

(3) The procedures for emergency shutdown;

(4) A description of the number, kind, place, and use of the fire equipment required by § 127.1501(a) and of the portable fire extinguishers required by § 127.1503;

(5) The telephone numbers of local Coast Guard units, hospitals, fire departments, police departments, and other emergency-response organizations;

(6) If the facility has personnel shelters, the place of and provisions in each shelter;

(7) If the facility has first-aid stations, the location of each station;

(8) Emergency procedures for mooring and unmooring a vessel; and,

(9) If an off-site organization is to furnish emergency response, a copy of the written agreement required by § 127.1505(a)(2).

(b) The employee-emergency plan and fire-prevention plan required by OSHA in 29 CFR 1910.38 may be used to comply with this section to the extent that they address the requirements specified in paragraphs (a) (1) through (9) of this section.

[CGD 88–049, 60 FR 39799, Aug. 3, 1995; 60 FR 49509, Sept. 26, 1995]

§ 127.1309 Operations Manual and Emergency Manual: Use.

Each operator of a waterfront facility handling LHG shall ensure that—

(a) No transfer is conducted unless the facility has an examined Operations Manual and an examined Emergency Manual;

(b) Each transfer is conducted in accordance with the examined Operations Manual; and

(c) Each emergency response is conducted in accordance with the examined Emergency Manual.

§ 127.1311 Motor vehicles.

(a) When LHG is being transferred or stored in the marine transfer area of a waterfront facility handling LHG, the operator shall ensure that no person—

(1) Stops or parks a motor vehicle in a space other than a designated parking space;

(2) Refuels a motor vehicle within the area; or

(3) Operates a vehicle or other mobile equipment that constitutes a potential source of ignition within 15 meters (49.2 feet) of any storage container, manifold, loading arm, or independent mating flange containing a flammable liquid or vapor.

(b) If motor vehicles are permitted to stop in the marine transfer area for LHG, the operator shall designate and mark parking spaces that—

(1) Do not block fire lanes;

(2) Do not impede any entrances or exits; and

(3) Are not located within 15 meters (49.2 feet) of any storage container, manifold, loading arm, or independent mating flange containing a flammable liquid or vapor.

§ 127.1313 Storage of hazardous materials.

(a) Each operator of a waterfront facility handling LHG shall ensure that no materials listed in the table of hazardous materials under 49 CFR 172.101, except for the following, are stored in the marine transfer area for LHG:

(1) The LHG being transferred.

(2) Fuel required by the vessel, or by emergency equipment in the area.

(3) Oily wastes received from vessels.

(4) Solvents, lubricants, paints and similar materials in the amount required for one day's operations and maintenance.

(b) The operator shall ensure that flammable liquids not stored in bulk are stored in accordance with Chapter 4 of NFPA 30.

§ 127.1315 Preliminary transfer inspection.

Before each transfer, the person in charge of transfer for the facility shall—

(a) Inspect piping and equipment within the marine transfer area for LHG to be used for transfer and ensure that it meets the requirements in this part;

(b) Determine the contents, pressure, temperature, and capacity of each storage tank to or from which LHG will be transferred, to ensure that it is safe for transfer;

(c) Confer with the person in charge of transfer aboard the vessel, to review and agree on—

(1) The sequence of acts required for transfer;

(2) The rate, maximum working pressure, and minimum working temperature of transfer;

(3) The duties, stations, and watches of each person assigned for transfer; and

(4) The emergency procedures in the examined Emergency Manual;

(d) Ensure that the vessel is securely moored and that the transfer connections allow it to move to the limits of its moorings without placing a strain on the piping, hose, or loading arm used for transfer;

(e) Ensure that each part of the transfer system is aligned to allow the flow of LHG to the desired place;

(f) Ensure the display of the warning signs required by § 127.1113;

(g) Ensure that the requirements of this part concerning smoking and fire protection are met;

(h) Ensure that qualified personnel are on duty in accordance with the examined Operations Manual and §§ 127.1301 and 127.1302; and

(i) Test the following to determine that they are operable:

(1) The communication system required by § 127.1111.

(2) The gas detectors required by § 127.1203.

§ 127.1317 Declaration of Inspection.

(a) Each person in charge of transfer for the facility shall ensure that no person transfers LHG to or from a vessel until a Declaration of Inspection that meets paragraph (c) of this section is executed and signed by both the person in charge aboard the vessel and the person in charge for the facility.

(b) No person in charge of transfer for the facility may sign the Declaration unless that person has fulfilled the requirements of § 127.1315 and has indicated fulfillment of each requirement by writing his or her initials in the appropriate space on the Declaration.

(c) Each Declaration must contain—

(1) The name of the vessel and that of the facility;

(2) The date and time that the transfer begins;

(3) A list of the requirements in § 127.1315 with the initials of both the person in charge aboard the vessel and the person in charge for the facility after each requirement, indicating the fulfillment of the requirement;

(4) The signatures of both the person in charge aboard the vessel and the person in charge for the facility, and the date and time of signing, indicating that they are both ready to begin transfer; and

(5) The signature of each relief person in charge and the date and time of each relief.

(d) The person in charge of transfer for the facility shall give one signed copy of the Declaration to the person in charge of transfer aboard the vessel and retain the other.

(e) Each operator of a facility shall retain a signed copy of the Declaration at the facility for 30 days after the transfer.

§ 127.1319 Transfer of LHG.

(a) The operator of a waterfront facility handling LHG shall notify the COTP of the time and place of each transfer of LHG in bulk at least 4 hours before it begins.

(b) During transfer, each operator of a waterfront facility handling LHG shall ensure that—

(1) The marine transfer area for LHG is under the supervision of a person in charge certified for transfers of LHG, who has no other assigned duties during the transfer;

(2) The person in charge supervises transfers only to or from one vessel at a time unless authorized by the COTP.

(3) No person transferring fuel or oily waste is involved in the transfer; and

(4) No vessel is moored outboard of any LHG vessel unless allowed by the COTP or the examined Operations Manual of the facility.

(c) During transfer, each person in charge of transfer for the facility shall—

(1) Maintain communication with the person in charge of transfer aboard the LHG vessel;

(2) Ensure that an inspection of the transfer piping and equipment for leaks, frost, defects, and other threats to safety takes place at least once every transfer;

(3) Ensure that—

(i) Transfer of LHG is discontinued as soon as a release or fire is detected in the area or aboard the vessel; and

(ii) Transfer of flammable LHG is discontinued when electrical storms or uncontrolled fires approach near the area; and

(4) Ensure that the outdoor lighting required by § 127.1109 is turned on between sunset and sunrise.

(d) Upon completion of transfer of LHG, each operator of a waterfront facility handling LHG shall ensure that hoses and loading arms used for transfer are drained of LHG residue and depressurized before disconnecting from the vessel.

NOTE TO § 127.1319: Corresponding standards for vessels appear at 46 CFR part 154.

§ 127.1321 Release of LHG.

(a) Each operator of a waterfront facility handling LHG shall ensure that—

(1) No person intentionally releases LHG into the environment; and

(2) If a release of LHG or its vapor threatens vessels or persons outside the marine transfer area for LHG, they are notified by the warning devices.

(b) If LHG or its vapor is released, the person in charge of transfer for the facility shall—

(1) Immediately notify the person in charge of transfer aboard the vessel that transfer must be shut down;

(2) Shut down transfer in coordination with the person aboard the vessel;

(3) Notify the COTP of the release; and

(4) Not resume transfer until authorized by the COTP.

§ 127.1325 Access to marine transfer area for LHG.

Each operator of a waterfront facility handling LHG shall ensure that—

(a) Access to the marine transfer area for LHG from shoreside and waterside is limited to—

(1) Personnel who work in the area, transfer personnel, vessel personnel, and delivery and service personnel in the course of their business;

(2) Federal, State, and local officials; and

(3) Other persons authorized by the operator;

(b) Each person allowed into the area is positively identified as someone authorized to enter and that each person other than an employee of the facility displays an identifying badge;

(c) Guards are stationed, and fences or other devices are installed, to prevent, detect, and respond to unauthorized access, fires, and releases of LHG in the area, except that alternative measures approved by the COTP (such as electronic monitoring or random patrols) will be sufficient where the stationing of guards is impracticable; and

(d) Coast Guard personnel are allowed access to the facility, at any time, to make any examination or to board any vessel moored at the facility.

MAINTENANCE

§ 127.1401 General.

Each operator of a waterfront facility handling LHG shall ensure that all cargo handling equipment is operable, and that no equipment that may cause the release or ignition of LHG is used in the marine transfer area for LHG.

§ 127.1403 Inspections.

(a) Each operator of a waterfront facility handling LHG shall conduct a visual inspection for defects of each pressure relief device not capable of being tested.

(b) The operator shall conduct the inspection required by paragraph (a) of this section at least once each calendar year, with intervals between inspections not exceeding 15 months.

§ 127.1405 Repairs.

Each operator of a waterfront facility handling LHG shall ensure that—

(a) Equipment is repaired so that—

(1) The equipment continues to meet the applicable requirements in this subpart; and

(2) Safety is not compromised; and

(b) Welding and cutting meet NFPA 51B.

§ 127.1407 Tests.

(a) Each operator of a waterfront facility handling LHG shall conduct a static liquid-pressure test of the piping, hoses, and loading arms of the LHG-transfer system located in the marine transfer area for LHG, and shall verify the set pressure of the safety and relief valves—

(1) After the system or the valves are altered;

(2) After major repairs to the system or the valves;

(3) After any increase in the MAWP of the system; and

(4) At least once each calendar year, with intervals between tests not exceeding 15 months.

(b) The pressure for the test under paragraph (a) of this section must be at least 1.1 times the MAWP and last for at least 30 minutes.

(c) The operator shall conduct a test of each pressure gauge, to ensure that the displayed pressure is within 10 percent of the actual pressure, at least

once each calendar year, with intervals between tests not exceeding 15 months.

(d) The operator shall conduct a test of each item of remote operating or indicating equipment, such as a remotely operated valve, at least once each calendar year, with intervals between tests not exceeding 15 months.

(e) The operator shall conduct a test of the emergency shutdown required by § 127.1205 at least once every two months, to ensure that it will perform as intended. If transfers of LHG occur less often than every two months, the operator may conduct this test before each transfer instead of every two months.

(f) The operator shall conduct a test of the warning alarm required by § 127.1207 at least once every six months, to ensure that it will perform as intended. If transfers of LHG occur less often than every six months, the operator may conduct this test before each transfer instead of every six months.

§ 127.1409 Records.

(a) Each operator of a waterfront facility handling LHG shall keep on file:

(1) A description of the components inspected or tested under § 127.1403 or 127.1407.

(2) The date and results of each inspection or test under § 127.1403 or 127.1407.

(3) A description of any repair made after the inspection or test.

(4) The date and a description of each alteration or major repair to the LHG transfer system or its valves.

(b) The operator shall keep this information on file for at least 24 months after the inspection, test, alteration, or major repair.

FIREFIGHTING EQUIPMENT

§ 127.1501 General.

(a) The number, kind, and place of equipment for fire detection, protection, control, and extinguishment must be determined by an evaluation based upon sound principles of fire-protection engineering, analysis of local conditions, hazards within the waterfront facility handling LHG, and exposure to other property. A description of the number, kind, place, and use of fire equipment determined by this evaluation must appear in the Emergency Manual for each facility. The evaluation for each new facility and for all new construction on each existing facility must be submitted to the COTP for review when the emergency manual is submitted under § 127.1307.

(b) All fire equipment for each facility must be adequately maintained, and periodically inspected and tested, so it will perform as intended.

(c) The following must be red or some other conspicuous color and be in places that are readily accessible:

(1) Hydrants and standpipes.

(2) Hose stations.

(3) Portable fire extinguishers.

(4) Fire monitors.

(d) Fire equipment must bear the approval, if applicable, of Underwriters Laboratories, Inc., Factory Mutual Research Corporation, or other independent laboratory recognized by NFPA.

[CGD 88–049, 60 FR 39796, Aug. 3, 1995, as amended by USCG–1999–5832, 64 FR 34714, June 29, 1999]

§ 127.1503 Portable fire extinguishers.

Each operator of a waterfront facility handling LHG must provide portable fire extinguishers of appropriate, number, size, and kind in the marine transfer area for LHG in accordance with NFPA 10.

§ 127.1505 Emergency response and rescue.

(a) Each waterfront facility handling LHG must arrange for emergency response and rescue pending the arrival of resources for firefighting or pollution control. Response and rescue may be performed by facility personnel or by an off-site organization.

(1) If response and rescue are performed by facility personnel, appropriate training and equipment for personnel protection must be furnished to those personnel. Training and equipment that meets 29 CFR 1910.120, hazardous-waste operations and emergency response, will be appropriate.

(2) If response and rescue are performed by an off-site organization, the organization must enter into a written agreement with the facility indicating the services it will perform and the

time within which it will perform them to injured or trapped personnel.

(b) [Reserved]

§ 127.1507 Water systems for fire protection.

(a) Each waterfront facility handling LHG must have a supply of water and a means for distributing and applying the water to protect personnel; to cool storage tanks, equipment, piping, and vessels; and to control unignited leaks and spills in the marine transfer area for LHG except when the evaluation required by § 127.1501(a) indicates otherwise. The evaluation must address fire protection for structures, cargo, and vessels. Each water system must include on the pier or wharf at least one 2½-inch supply line, one 2½-inch fire hydrant, and enough 2½-inch hose to connect the hydrant to the vessel.

(b) Each water system must fully and simultaneously supply, for at least 2 hours, all fixed fire-protection systems, including monitor nozzles, at their designed flow and pressure for the worst single incident foreseeable, plus 63 L/s (1000 gpm) for streams from hand-held hoses.

§ 127.1509 Equipment for controlling and extinguishing fires.

(a) Within each marine transfer area for LHG of each waterfront facility handling LHG that transfers a flammable LHG, portable or wheeled fire extinguishers suitable for gas fires, preferably dry chemical extinguishers, must be available at strategic sites, as determined by the evaluation required by § 127.1501(a).

(b) Fixed systems for extinguishing or controlling fires may be appropriate for protection against particular hazards. The evaluation required by § 127.1501(a) may specify the use of one or more of the following fixed systems:

(1) Low-, medium-, or high-expansion foam.

(2) Dry chemicals.

(3) Water applied as deluge, spray, or sprinkle.

(4) Carbon dioxide.

(5) Other NFPA approved fire extinguishing media.

§ 127.1511 International shore connection.

Each marine transfer area for LHG that receives foreign flag vessels must have an international shore connection meeting the requirements of ASTM F 1121 (incorporated by reference, see § 127.003).

[CGD 88–049, 60 FR 39796, Aug. 3, 1995, as amended by USCG–2000–7223, 65 FR 40057, June 29, 2000]

FIRE PROTECTION

§ 127.1601 Smoking.

Each operator of a waterfront facility handling LHG shall ensure that no person smokes in the marine transfer area for LHG unless—

(a) Neither flammable LHG nor its vapors are present in the area; and

(b) The person is in a place designated and marked in accordance with local law.

§ 127.1603 Hotwork.

Each operator of a waterfront facility handling LHG shall ensure that no person conducts welding, torch cutting, or other hotwork on the facility, or on a vessel moored to the facility, unless—

(a) The COTP has issued a permit for that hotwork; and

(b) The conditions of the permit are met.

§ 127.1605 Other sources of ignition.

Each operator of a waterfront facility handling LHG shall ensure that in the marine transfer area for LHG—

(a) There are no open fires or open flame lamps;

(b) Heating equipment will not ignite combustible material;

(c) Each chimney and appliance has a spark arrestor if it uses solid fuel or is located where sparks may ignite combustible material; and

(d) All rubbish, debris, and waste go into appropriate receptacles.

[CGD 88–049, 60 FR 39796, Aug. 3, 1995, as amended by CGD 97–023, 62 FR 33363, June 19, 1997]

PART 128—SECURITY OF PASSENGER TERMINALS

Subpart A—General

Sec.
128.100 Does this part apply to me?
128.110 Definitions.
128.120 Incorporation by reference.

Subpart B—Security Program

128.200 What must my Terminal Security Plan cover?
128.210 What are the responsibilities of my terminal security officer?
128.220 What must I do to report an unlawful act and related activity?

Subpart C—Plans and Procedures for Terminal Security

128.300 What is required to be in a Terminal Security Plan?
128.305 Who must submit a Terminal Security Plan?
128.307 What is the procedure for examination?
128.309 What do I do if I need to amend my Terminal Security Plan?
128.311 What is my right of appeal?

AUTHORITY: 33 U.S.C. 1231; 49 CFR 1.46.

SOURCE: CGD 91–012, 61 FR 37654, July 18, 1996, unless otherwise noted.

Subpart A—General

§ 128.100 Does this part apply to me?

This part applies to all passenger terminals in the United States or its territories when being used for the assembling, processing, embarking, or disembarking of passengers or baggage for passenger vessels over 100 gross tons, carrying more than 12 passengers for hire; making a voyage lasting more than 24 hours, any part of which is on the high seas. It does not apply to terminals when serving ferries that hold Coast Guard Certificates of Inspection endorsed for ''Lakes, Bays, and Sounds'', and that transit international waters for only short periods of time, on frequent schedules.

§ 128.110 Definitions.

The definitions in part 120 of this chapter apply to this part, except for the definition of *You*. As used in this part:

You means the owner or operator of a passenger terminal.

[CGD 91–012, 63 FR 53591, Oct. 6, 1998]

§ 128.120 Incorporation by reference.

(a) Certain material is incorporated by reference into this part with the approval of the Director of the Federal Register in accordance with 5 U.S.C. 552(a) and 1 CFR part 51. To enforce any edition other than that specified in paragraph (b) of this section, the Coast Guard must publish notice of change in the FEDERAL REGISTER and must make the material available to the public. All approved material may be inspected at the U.S. Coast Guard, (CG–521), 2100 2nd St., SW., Stop 7126, Washington, DC 20593–7126, and at the National Archives and Records Administration (NARA). For information on the availability of this material at NARA, call 202–741–6030, or go to: *http://www.archives.gov/federal_register/code_of_federal_regulations/ibr_locations.html*. Copies may be obtained from IMO, 4 Albert Embankment, London SE1 7 SR.

(b) The materials approved for incorporation by reference in this part and the sections affected are:

INTERNATIONAL MARITIME ORGANIZATION (IMO)

4 Albert Embankment, London SE1 7SR

MSC Circular 443, Measures to Prevent Unlawful Acts Against Passengers and Crews on Board Ships September 26, 1986—128.220, 128.300

[CGD 91–012, 61 FR 37654, July 18, 1996, as amended by USCG–2002–12471, 67 FR 41332, June 18, 2002; 69 FR 18803, Apr. 9, 2004; USCG–2010–0351, 75 FR 36283, June 25, 2010]

Subpart B—Security Program

§ 128.200 What must my Terminal Security Plan cover?

(a) If this part applies to your passenger terminal, you must implement for that terminal a program that—

(1) Provides for the safety and security of persons and property in the terminal and aboard each passenger vessel subject to part 120 of this chapter moored at the terminal, against unlawful acts;

(2) Prevents or deters the carriage aboard any such vessel moored at the terminal of any prohibited weapon, incendiary, or explosive on or about any person or within his or her personal articles or baggage, and the carriage of any prohibited weapon, incendiary, or explosive in stowed baggage, cargo, or stores;

(3) Prevents or deters unauthorized access to any such vessel and to restricted areas in the terminal;

(4) Provides appropriate security measures for Security Levels I, II, and III that allow for increases in security when the Commandant or Captain of the Port (COTP) advises you that a threat of an unlawful act exists and may affect the terminal, a vessel, or any person aboard the vessel or terminal;

(5) Designates, by name, a security officer for the terminal;

(6) Provides for the evaluation of all security personnel of the terminal, before hiring, to determine suitability for employment; and

(7) Provides for coordination with vessel security while any passenger vessel subject to part 120 of this chapter is moored at the terminal.

(b) If this part applies to your passenger terminal, you must work with the operator of each passenger vessel subject to part 120 of this chapter, to provide security for the passengers, the terminal, and the vessel. You need not duplicate any provisions fulfilled by the vessel unless directed to by the COTP. When a provision is fulfilled by a vessel, the applicable section of the Terminal Security Plan required by § 128.300 must refer to that fact.

[CGD 91–012, 63 FR 53591, Oct. 6, 1998]

§ 128.210 What are the responsibilities of my terminal security officer?

(a) If this part applies to your passenger terminal, you must designate a security officer for the terminal.

(b) This officer must ensure that—

(1) An initial comprehensive security survey is conducted and updated;

(2) The Terminal Security Plan required by § 128.300 is implemented and maintained, and that amendments to correct its deficiencies and satisfy the security requirements of the terminal are proposed;

(3) Adequate training for personnel responsible for security is provided;

(4) Regular security inspections of the terminal are conducted;

(5) Vigilance is encouraged, as well as is general awareness of security, at the terminal;

(6) All occurrences or suspected occurrences of unlawful acts and related activities are reported under § 128.220 and records of the incident are maintained; and

(7) Coordination, for implementation of the Terminal Security Plan required by § 128.300, takes place with the vessel security officer of each vessel that embarks or disembarks passengers at the terminal.

[CGD 91–012, 63 FR 53592, Oct. 6, 1998]

§ 128.220 What must I do to report an unlawful act and related activity?

(a) Either you or the terminal security officer must report each breach of security, unlawful act, or threat of an unlawful act against the terminal, a passenger vessel subject to part 120 of this chapter destined for or moored at that terminal, or any person aboard the terminal or vessel, to the COTP, to the local office of the Federal Bureau of Investigation (FBI), and to the local police agency having jurisdiction over the terminal.

(b) Either you or the terminal security officer must file a written report of the incident using the form ''Report on an Unlawful Act,'' contained in IMO MSC Circular 443, as soon as possible, to the local COTP.

[CGD 91–012, 63 FR 53592, Oct. 6, 1998]

Subpart C—Plans and Procedures for Terminal Security

§ 128.300 What is required to be in a Terminal Security Plan?

(a) If your passenger terminal is subject to this part, you must develop and maintain, in writing, for that terminal, an appropriate Terminal Security Plan that articulates the program required by § 128.200.

(b) The Terminal Security Plan must be developed and maintained under the guidance in IMO MSC Circular 443 and must address the security of passengers aboard passenger vessels subject to

part 120 of this chapter, of members of crews of such vessels, and of employees of the terminal, by establishing security measures to take for Security Levels I, II, and III, to—

(1) Deter unauthorized access to the terminal and its restricted areas and to any passenger vessel moored at the terminal;

(2) Deter the introduction of prohibited weapons, incendiaries, and explosives into the terminal and its restricted areas and onto any passenger vessel moored at the terminal;

(3) Encourage vigilance, as well as general awareness of security, at the terminal;

(4) Provide adequate security training to employees of the terminal;

(5) Coordinate responsibilities for security with the operator of each vessel that embarks or disembarks passengers at the terminal; and

(6) Provide information to employees of the terminal and to law-enforcement personnel, in case of an incident affecting security.

(c) You must amend the Terminal Security Plan to address any known deficiencies.

(d) You must restrict the distribution, disclosure, and availability of information contained in the Terminal Security Plan to those persons with an operational need to know.

[CGD 91–012, 63 FR 53592, Oct. 6, 1998]

§ 128.305 Who must submit a Terminal Security Plan?

(a) The owner or operator of the vessel must submit a Terminal Security Plan whenever—

(1) There is an agreement with you that the owner or operator of the vessel will submit the Plan;

(2) The owner or operator of the vessel has exclusive use of the pier and terminal building immediately adjacent to the pier and has complete control of that area;

(3) There is no terminal; or

(4) Passengers embark or disembark but no baggage or stores are loaded or offloaded.

(b) In the situations described in paragraphs (a)(3) and (4) of this section, the owner or operator of the vessel may, with the permission of the cognizant COTP, use an annex to the vessel's security plan instead of a Terminal Security Plan.

(c) You must submit a Terminal Security Plan whenever—

(1) There is an agreement with the owner or operator of the vessel that you will submit the Plan;

(2) No security agreement exists; or

(3)(i) At least one vessel other than a passenger vessel uses the terminal;

(ii) More than one passenger vessel line uses the terminal; or

(iii) The terminal loads or offloads baggage or stores.

[CGD 91–012, 63 FR 53592, Oct. 6, 1998]

§ 128.307 What is the procedure for examination?

(a) Unless a plan for your passenger terminal will be submitted by an entity other than yourself under § 128.305 or § 120.303 of this chapter, you must submit two copies of each Terminal Security Plan required by § 128.300 to the COTP for examination at least 60 days before transferring passengers to or from a vessel subject to part 120 of this chapter.

(b) If the COTP finds that the Terminal Security Plan meets the requirements of § 128.300, he or she will return a copy to you marked ''Examined by the Coast Guard.''

(c) If the COTP finds that the Terminal Security Plan does not meet the requirements of § 128.300, he or she will return the Plan with an explanation of why it does not meet them.

(d) No terminal subject to this part may transfer passengers to or from a passenger vessel subject to part 120 of this chapter, unless it holds either a Terminal Security Plan that we have examined or a letter from the COTP stating that we are currently reviewing the Plan and that normal operations may continue until the COTP has determined whether the Plan meets the requirements of § 128.300.

[CGD 91–012, 63 FR 53592, Oct. 6, 1998]

§ 128.309 What do I do if I need to amend my Terminal Security Plan?

(a) If your passenger terminal is subject to this part, you must amend your Terminal Security Plan when directed by the COTP, and may amend it on your own initiative.

(b) You must submit each proposed amendment to the Terminal Security Plan you initiate to the COTP for review at least 30 days before the amendment is to take effect, unless he or she allows a shorter period. The COTP will examine the amendment and respond according to § 128.307.

(c) The COTP may direct you to amend your Terminal Security Plan if he or she determines that implementation of the Plan is not providing effective security. Except in an emergency, he or she will issue you a written notice of matters to address and will allow you at least 60 days to submit proposed amendments.

(d) If there is an emergency or other circumstance that makes the procedures in paragraph (c) of this section impracticable, the COTP may give you an order to implement increases in security immediately. The order will incorporate a statement of the reasons for it.

[CGD 91–012, 63 FR 53593, Oct. 6, 1998]

§ 128.311 What is my right of appeal?

Any person directly affected by a decision or action taken by the COTP under this part, may appeal that action or decision to the cognizant District Commander according to the procedures in 46 CFR 1.03–15; the District Commander's decision on appeal may be further appealed to the Commandant according to the procedures in 46 CFR 1.03–25.

[CGD 91–012, 61 FR 37654, July 18, 1996. Redesignated by CGD 91–012, 63 FR 53592, Oct. 6, 1998]

SUBCHAPTER M—MARINE POLLUTION FINANCIAL RESPONSIBILITY AND COMPENSATION

PART 133—OIL SPILL LIABILITY TRUST FUND; STATE ACCESS

Sec.
133.1 Purpose.
133.3 Definitions.
133.5 Requests: General.
133.7 Requests: Amount.
133.9 Requests: Where made.
133.11 Requests: Contents.
133.13 Removal actions eligible for funding.
133.15 Determination of eligibility for funding.
133.17 Conduct of removal actions.
133.19 Recordkeeping.
133.21 Records retention.
133.23 Investigation to determine the source and responsible party.
133.25 Notification of Governor's designee.

AUTHORITY: 33 U.S.C. 2712(a)(1)(B), 2712(d) and 2712(e); Sec. 1512 of the Homeland Security Act of 2002, Pub. L. 107–296, Title XV, Nov. 25, 2002, 116 Stat. 2310 (6 U.S.C. 552(d)); E.O. 12777, 56 FR 54757, 3 CFR, 1991 Comp., p. 351, as amended by E.O. 13286, 68 FR 10619, 3 CFR, 2004 Comp., p. 166; Department of Homeland Security Delegation No. 0170.1., para. 2(80).

SOURCE: CGD 92–014, 57 FR 53969, Nov. 13, 1992, unless otherwise noted.

§ 133.1 Purpose.

This part prescribes procedures for the Governor of a State to request payments from the Oil Spill Liability trust Fund (the Fund) for oil pollution removal costs under section 1012(d)(1) of the Oil Pollution Act of 1990 (the Act) (33 U.S.C. 2712(d)(1)).

§ 133.3 Definitions.

(a) As used in this part, the following terms have the same meaning as set forth in section 1001 of the Act (33 U.S.C. 2701): ''discharge'', ''exclusive economic zone'', ''Fund'', ''incident'', ''National Contingency Plan'', ''navigable waters'', ''oil'', ''remove'', ''removal'', ''removal costs'', ''responsible party'', ''State'', and ''United States''.

(b) As used in this part—

Act means Title I of the Oil Pollution Act of 1990 (33 U.S.C. 2701 through 2719).

Director, NPFC, means the person in charge of the U.S. Coast Guard National Pollution Funds Center or that person's authorized representative.

NPFC means the Director National Pollution Funds Center, NPFC MS 7100, U.S. Coast Guard, 4200 Wilson Blvd., Suite 1000, Arlington, VA 20598–7100.

On-Scene Coordinator or *OSC* means the Federal official predesignated by the Environmental Protection Agency or the U.S. Coast Guard to direct and coordinate all efforts for removal of a discharge, or the mitigation or the prevention of a substantial threat of a discharge, of oil.

Removal action means an incident-specific activity taken under this part to contain or remove a discharge, or to mitigate or prevent a substantial threat of a discharge, of oil.

[CGD 92–014, 57 FR 53969, Nov. 13, 1992, as amended by USCG–2009–0416, 74 FR 27440, June 10, 2009]

§ 133.5 Requests: General.

(a) Upon a request submitted in accordance with this part by the Governor of a State or his or her designated State official, the OSC may obtain a Federal Project Number (FPN) and a ceiling not to exceed $250,000 per incident for removal costs. The removal costs must be for the immediate removal of a discharge, or the mitigation or prevention of a substantial threat of a discharge, of oil.

(b) Before a request under this part is made, the State official will ensure that the procedures in the National Contingency Plan (40 CFR part 300) for notifying Federal authorities of the discharge or threat of discharge have been met.

(c) The Federal Grant and Cooperative Agreement Act of 1977 (31 U.S.C. 6301–6308), 2 CFR part 3000, 6 CFR part 9, and 49 CFR parts 18 and 90, apply to Fund monies obligated for payment under this part.

[CGD 92–014, 57 FR 53969, Nov. 13, 1992, as amended by USCG–2013–0397, 78 FR 39175, July 1, 2013]

§ 133.7 Requests: Amount.

(a) The amount of funds that may be requested under this part—

(1) Is limited to the amount anticipated for immediate removal action for a single oil pollution incident, but, in any event, may not exceed $250,000 per incident;

(2) Must be for removal costs consistent with the National Contingency Plan; and

(3) Must be reasonable for the removal actions proposed, considering such factors as quantity and composition of the oil, weather conditions and customary costs of similar services in the locale.

(b) The funds requested are obligated only to the extent they are determined to be for immediate removal actions which are reasonable and otherwise eligible for payment under this part.

§ 133.9 Requests: Where made.

Requests for access to the Fund under § 133.5 must be made by telephone or other rapid means to the OSC.

§ 133.11 Request: Contents.

In making a request for access to the Fund, the person making the request shall—

(a) Indicate that the request is a State access request under 33 CFR part 133;

(b) Give his or her name, title, department, and State;

(c) Describe the incident in sufficient detail to allow a determination of jurisdiction, including at a minimum the date of the occurrence, type of product discharged, estimated quantity of the discharge, body of water involved, and proposed removal actions for which funds are being requested under this part; and

(d) Indicate the amount of funds being requested.

§ 133.13 Removal actions eligible for funding.

To be eligible for funding under this part, each removal action must meet the following:

(a) Must be for an incident, occurring after August 18, 1990, which resulted in a discharge, or the substantial threat of a discharge, of oil into or upon the navigable waters or adjoining shorelines.

(b) Must comply with the National Contingency Plan.

(c) Must be an immediate removal action.

§ 133.15 Determination of eligibility for funding.

Upon receipt of the information under § 133.11 and, if necessary, from other sources determined to be appropriate at his or her discretion, the OSC will determine whether the proposed removal actions meet the requirements of § 133.13. If necessary, the OSC may seek further clarification of the proposed actions from the State official. The OSC shall expeditiously notify the State official and the Director, NPFC, of his or her decision.

§ 133.17 Conduct of removal actions.

Removal actions funded under this part must be coordinated with the OSC and conducted in accordance with the National Contingency Plan.

§ 133.19 Recordkeeping.

(a) The State official shall maintain detailed records of expenditures made from the funds provided under this part, including records of—

(1) Daily expenditures for each individual worker, giving the individual's name, title or position, activity performed, time on task, salary or hourly rate, travel costs, per diem, out-of-pocket or extraordinary expenses, and whether the individual is normally available for oil spill removal;

(2) Equipment purchased or rented each day, with the daily or hourly rate;

(3) Miscellaneous materials and expendables purchased each day; and

(4) Daily contractor or consultant fees, including costs for their personnel and contractor-owned or rented equipment, as well as that of any subcontractor.

(b) The State official shall submit a copy of these records and a summary document stating the total of all expenditures made to the NPFC official specified in § 133.25(c) within thirty days after completion of the removal actions. A copy of these documents shall also be submitted to the cognizant OSC.

(c) Upon request of the OSC or the NPFC, the State official shall make the original records available for inspection.

(d) If, after inspecting the records, the Director, NPFC, determines that expenditures by a State official from funds obligated under this part were not eligible for funding under this part and the expenditures were not made with the good faith understanding that they were eligible under this part, the Director, NPFC, may seek reimbursement to the Fund from the State.

§ 133.21 Records retention.

(a) The State official shall maintain all records for ten years following completion of the removal actions.

(b) If any litigation, claim, negotiation, audit, cost recovery, or other action involving the records has been started before the expiration of the ten-year period, the records must be retained until completion of the action and resolution of all issues which arise from it, or until the end of the regular ten-year period, whichever is later.

§ 133.23 Investigation to determine the source and responsible party.

(a) The State official shall promptly make a thorough investigation to determine the source of the incident and the responsible party.

(b) Upon completion of the investigation, the State official shall forward the results of the investigation and copies of the supporting evidence identifying the source and the responsible party to both the cognizant OSC and the NPFC official specified in § 133.25(c).

§ 133.25 Notification of Governor's designee.

(a) If the Governor of a State anticipates the need to access the Fund under this part, he or she must advise the NPFC in writing of the specific individual who is designated to make requests under this part.

(b) This designation must include the individual's name, address, telephone number, and title or capacity in which employed.

(c) The information required by paragraph (b) of this section must be forwarded to the Director National Pollution Funds Center, NPFC CM, MS 7100, U.S. Coast Guard, 4200 Wilson Blvd., Suite 1000, Arlington, VA 20598–7100.

[CGD 92–014, 57 FR 53969, Nov. 13, 1992, as amended by USCG–2009–0416, 74 FR 27440, June 10, 2009]

PART 135—OFFSHORE OIL POLLUTION COMPENSATION FUND

Subpart A—General

Sec.
135.1 Purpose.
135.3 Applicability.
135.5 Definitions.
135.7 Delegation—Fund Administrator.
135.9 Fund address.

Subpart B—Levy of Fees

135.101 Purpose.
135.103 Levy and payment of barrel fee on OCS oil.

Subpart C—Financial Responsibility for Offshore Facilities

135.201 Applicability.
135.203 Amount required.
135.204 Submission of evidence.
135.205 Methods of establishing.
135.207 Insurance as evidence.
135.209 Guaranty as evidence.
135.210 Indemnity as evidence.
135.211 Surety bond as evidence.
135.213 Qualification as self-insurer.
135.215 Certification.
135.219 Notification of changes affecting certification.
135.221 Reapplication for certification.
135.223 Certificates, denial or revocation.

Subpart D—Notification of Pollution Incidents

135.303 Definitions.
135.305 Notification procedures.
135.307 Notification contents.

Subpart E—Access, Denial, and Detention

135.401 Access to vessel, Certificates of Financial Responsibility.
135.403 Sanctions for failure to produce vessel Certificates of Financial Responsibility.
135.405 Appeal provisions.

AUTHORITY: 33 U.S.C. 2701–2719; E.O. 12777, 56 FR 54757; Department of Homeland Security Delegation No. 0170.1, para. 2(80).

SOURCE: CGD 77–055, 44 FR 16868, Mar. 19, 1979, unless otherwise noted.

Subpart A—General

§ 135.1 Purpose.

(a) This part prescribes the policies, procedures, and administrative practices regarding offshore oil pollution liability and compensation, including the administration and general operation of the fund established under Title III of the Outer Continental Shelf Lands Act Amendments of 1978 (Pub. L. 95–372, 43 U.S.C. 1811 et. seq.).

§ 135.3 Applicability.

(a) This part applies to each person who:

(1) Owns oil obtained from the Outer Continental Shelf when the oil in produced;

(2) Owns, operates, or is the guarantor of the owner or operator of any vessel;

(3) Owns, operates, or is the guarantor of the owner or operator of any offshore facility;

(4) Sustains an economic loss as a consequence of oil pollution arising from Outer Continental Shelf activities; or

(5) Otherwise has responsibilities under Title III of the Act and the regulations in this part.

§ 135.5 Definitions.

(a) As used in this part, the following terms shall have the same meaning as defined in section 301 of Title III of the Outer Continental Shelf Lands Act Amendments of 1978 (Pub. L. 95–372): ''barrel''; ''claim''; ''discharge''; ''facility''; ''Fund''; ''guarantor''; ''incident''; ''offshore facility''; ''oil pollution''; ''operator''; ''owner''; ''person''; ''person in charge''; ''public vessel''; and ''vessel''.

(b) As used in this part:

(1) *Act* means Title III of the Outer Continental Shelf Lands Act Amendments of 1978 (Pub. L. 95–372), entitled ''Offshore Oil Spill Pollution Fund''.

(2) *Captain of the Port* means a Coast Guard officer designated as Captain of the Port for the areas described in part 3 of this chapter, or that person's authorized representative or, where there is no Captain of the Port area, the District Commander.

(3) *Commandant* means the Commandant of the Coast Guard or that person's authorized representative.

(4) *District Commander* means the Coast Guard officer commanding a Coast Guard District described in part 3 of this chapter, or that person's authorized representative.

(5) *Fund Administrator* means the person to whom the authority and functions of the Commandant as administrator of the Fund are delegated.

(6) *Oil* means petroleum, including crude oil or any fraction or residue therefrom and natural gas condensate, except that the term does not include natural gas.

(7) *Outer Continental Shelf* or *OCS* means ''outer Continental Shelf'' as defined in section 2(a) of the Outer Continental Shelf Lands Act (43 U.S.C.1331(a)).

§ 135.7 Delegation—Fund Administrator.

(a) The Fund Administrator is delegated authority to perform those functions assigned or delegated to the Secretary of Transportation under the Act not reserved by the Secretary of Transportation or the Commandant.

(b) The Fund Administrator may redelegate and authorize successive redelegations of the authority granted in paragraph (a) of this section within the command under which that person has jurisdiction or to members of the Fund staff.

§ 135.9 Fund address.

The address to which correspondence relating to the Coast Guard's administration of the Fund should be directed is: Director National Pollution Funds Center, NPFC MS 7100, U.S. Coast Guard, 4200 Wilson Blvd., Suite 1000, Arlington, VA 20598–7100.

[CGD 86–032, 52 FR 23175, June 18, 1987, as amended by CGD 88–052, 53 FR 25120, July 1, 1988; USCG–1998–3799, 63 FR 35530, June 30, 1998; USCG–2009–0416, 74 FR 27440, June 10, 2009]

Subpart B—Levy of Fees

§ 135.101 Purpose.

(a) The purpose of this subpart is to state the general requirements concerning the levy of fees.

§ 135.103 Levy and payment of barrel fee on OCS oil.

(a) A fee of $.03 per barrel is levied on all oil produced on the OCS and is imposed upon the owner of the oil when such oil is produced.

(b) The owner of oil obtained from the OCS shall, for the purpose of computing the barrel fee levied in paragraph (a) of this section, measure OCS oil production by employing the methods and criteria of the Bureau of Ocean Energy Management, Regulation and Enforcement contained in 30 CFR 250.180.

(c) The barrel fee levied in paragraph (a) of this section applies whenever the unobligated Fund balance is less than $200,000,000.

(d) Payment of the fee levied in paragraph (a) of this section is made in accordance with the fee collection regulations of the IRS at 26 CFR part 301, § 301.9001. Federal government entitlement to royalty oil does not constitute ownership of oil at time of production. The Fund Administrator advises the IRS when the unobligated Fund balance requires starting or stopping the collection of the barrel fee levied in this section, so the IRS may provide appropriate notice to affected owners of OCS oil.

[CGD 88–050, 53 FR 52997, Dec. 30, 1988, as amended by CGD 90–005, 55 FR 17268, Apr. 24, 1990; USCG–2011–0257, 76 FR 31837, June 2, 2011]

Subpart C—Financial Responsibility for Offshore Facilities

§ 135.201 Applicability.

(a) This subpart applies to the owner or operator of each offshore facility required by the Act to establish and maintain evidence of financial responsibility.

(b) For the purpose of this subpart:

(1) All structures, including platforms, wells, and pipelines, are considered a single offshore facility if they are physically connected, located upstream of the point of custody transfer, within the same oil field, and under one ownership.

(2) If separate parts of a structure, including platforms and pipelines, are owned separately, each part having common ownership is considered a separate offshore facility.

(3) A mobile offshore drilling unit is considered an offshore facility from the moment a drill shaft or other device connected to the unit first touches the seabed or connects to a well for the purposes of exploration, development, or production of oil until drilling is completed and the unit is no longer attached to the well or drill hole by any device.

(4) A mobile offshore drilling unit considered an offshore facility under paragraph (b)(3) of this section remains a separate facility when physically connected to another offshore facility, unless both are under one ownership.

(5) All segments of a common carrier pipeline from the point of custody transfer to the shore, including any pumping or booster stations, which are under one ownership are considered a single offshore facility.

(6) Any pipeline, which is under one ownership, between two offshore facilities, or between an offshore facility and the shore, is considered a single offshore facility.

(7) Offshore facilities which drill for, produce, or process only natural gas are not subject to this subpart unless the facilities have the capacity to transport, store, or otherwise handle more than 1,000 barrels of condensate at any one time.

NOTE: Regulations governing financial responsiblity and certification for vessels are promulgated by the Federal Maritime Commission.

§ 135.203 Amount required.

(a) Each facility that is used for drilling for, producing, or processing oil, or which has the capacity to transport, store, transfer, or otherwise handle more than one thousand barrels of oil at any one time must be covered by evidence of financial responsibility submitted by or on behalf of the owner or operator of the facility, in the amount of $35,000,000.

(b) Evidence of financial responsibility established and maintained by a person who owns or operates more than one facility, or who has an interest in the ownership or operation of more than one facility, may be applied by that person towards establishing and

maintaining the required evidence of financial responsibility for each facility in which that person has an interest, if the evidence is available to satisfy liabilities arising out of incidents involving those facilities.

§ 135.204 Submission of evidence.

(a) Where the offshore facility is owned and operated solely by one person, that person must establish and maintain evidence of financial responsibility covering the facility.

(b) Where the offshore facility is owned in its entirety by one person and operated solely by another person, evidence of financial responsibility covering the facility must be established and maintained by either the owner or the operator, or, in consolidated form, by both the owner and operator.

(c) Where the offshore facility is owned or operated by more than one person, evidence of financial responsibility covering the facility must be established and maintained by any one of the owners or operators, or, in consolidated form, by or on behalf of two or more owners or operators.

(d) When evidence of financial responsibility is established in a consolidated form, the proportional share of each participant must be shown. The evidence must be accompanied by a statement authorizing the applicant to act for and in behalf of each participant in submitting and maintaining the evidence of financial responsibility.

(e) Each owner and operator of a facility is subject to the penalty provided by section 312(a) of the Act if evidence of financial responsibility is not established and maintained for that facility.

§ 135.205 Methods of establishing.

(a) Evidence of financial responsibility may be established by any one, or any combination acceptable to the Fund Administrator, of the following methods:

(1) Insurance;

(2) Guaranty;

(3) Indemnity;

(4) Surety bond; or

(5) Qualification as self-insurer.

(b) The Fund Administrator will accept alternative evidence of financial responsibility if, in the Fund Administrator's opinion, it establishes an equivalent degree of financial responsibility for the purposes of this subpart.

§ 135.207 Insurance as evidence.

(a) Insurance filed with the Fund Administrator as evidence of financial responsibility shall be issued by an insurer that is acceptable to the Fund Administrator. Those insurers may include domestic and foreign insurance companies, corporations or associations of individual insurers, protection and indemnity associations, or other persons acceptable to the Fund Administrator.

(b) An insurer must:

(1) Agree to be sued directly, within the limits of the policy coverage, by any person for claims under the Act against the owner or operator; and

(2) Designate an agent in the United States for service of process.

(c) Insurance as evidence of financial responsibility must indicate the effective date in the endorsement on the application for Certificate of Financial Responsibility, and must remain in force until the date of termination indicated in the endorsement or until—

(1) 30 days after mailing, by certified mail, to the Fund Administrator, and the person insured, notification of intent to cancel; or

(2) Other evidence of financial responsibility acceptable to the Fund Administrator has been established; or

(3) The facility to which the insurance applies ceases to be a facility under § 135.201(b).

(d) Termination of insurance coverage shall not affect the liability of the insurer for an incident occurring before the effective date of termination.

(e) Confirmation of insurance may be accepted from an insurance broker that is acceptable to the Fund Administrator, subject to the Fund Administrator's approval of the individual underwriters, in lieu of their signature on an application, provided the confirmation:

(1) States the insurance covers liabilities under the Act;

(2) Sets forth the limit and deductible;

(3) Provides for direct action against the individual underwriters to the extent of their contracts;

(4) Names the underwriters and percentages of the limit accepted by each;

(5) States that the underwriters agree to give prior written notice of cancellation or change to the Fund Administrator as required in paragraph (c) of this section; and

(6) States that the notice indicated in paragraph (e)(5) of this section will not affect the underwriter's liability for incidents occurring before the effective date of cancellation.

§ 135.209 Guaranty as evidence.

(a) Guarantors must:

(1) Agree to be sued directly, within the limits the guaranty, by any person for claims under the Act against the owner or operator; and

(2) Designate an agent in the United States for service of process.

(b) Guaranties filed as evidence of financial responsibility must be accompanied by the same proof that the Guarantor is financially responsible as this subpart would require of the owner or operator; *i.e.*, insurance, surety bond, self-insurance, or other acceptable methods.

(c) A guaranty as evidence of financial responsibility must indicate the effective date in the endorsement on the application for Certificate of Financial Responsibility, and must remain in force until the date of termination indicated in the endorsement or until:

(1) 30 days after mailing, by certified mail, to the Fund Administrator, and the person guarantied, notification of intent to cancel; or

(2) Other evidence of financial responsibility acceptable to the Fund Administrator has been established; or

(3) The facility to which the guaranty applies ceases to be a facility under § 135.201(b).

(d) Termination of the guaranty shall not affect the liability of the guarantor for an incident occurring before the effective date of termination.

§ 135.210 Indemnity as evidence.

(a) An indemnitor must:

(1) Agree to be sued directly, within the limits of the contract coverage, by any person for claims under the Act against the owner or operator to the extent of the indemnity coverage; and

(2) Designate an agent in the United States for service of process.

(b) Indemnity filed as evidence of financial responsibility must be accompanied by the same proof of the indemnitor's financial responsibility as this subpart would require of the owner or operator; *i.e.*, insurance, surety bond, self-insurance; or other acceptable methods.

(c) An indemnity as evidence of financial responsibility must indicate the effective date in the endorsement on the application for Certificate of Financial Responsibility, and must remain in force until the date of termination indicated in the endorsement or until—

(1) 30 days after mailing, by certified mail, to the Fund Administrator, and the person indemnified, notification of intent to cancel; or

(2) Other evidence of financial responsibility acceptable to the Fund Administrator has been established; or

(3) The facility to which the indemnity applies ceases to be a facility under § 135.201(b).

(d) Termination of an indemnity shall not affect the liability of the indemnitor for an incident occurring before the effective date of termination.

§ 135.211 Surety bond as evidence.

(a) Each surety bond filed with the Fund Administrator as evidence of financial responsibility shall be issued by a bonding company that:

(1) Is authorized to do business in the United States;

(2) Is licensed to do business in the state or territory in which the bond is executed;

(3) Is certified by the Department of the Treasury with respect to the issuance of Federal bonds in the penal sum of the bond; and

(4) Designates an agent in the United States for service of process.

(b) The bonding company must agree to be sued directly, within the limits of the surety bond, by any person for claims under the Act against the owner or operator.

(c) A surety bond as evidence of financial responsibility must indicate the effective date in the endorsement

on the application for Certificate of Financial Responsibility, and must remain in force until the date of termination indicated in the endorsement or until:

(1) 30 days after mailing, by certified mail, to the Fund Administrator, and the person bonded, notification of intent to cancel; or

(2) Other evidence of financial responsibility acceptable to the Fund Administrator has been established; or

(3) The facility to which the surety bond applies ceases to be a facility under § 135.201(b).

(d) Termination of the surety bond shall not affect the liability of the surety for an incident occurring before the effective date of termination.

§ 135.213 Qualification as self-insurer.

(a) Qualification for self insurance must be supported by a copy of the self-insurer's current balance sheet, income statement, and statement of changes in financial position that are certified by an independent Certified Public Accountant and must be accompanied by either:

(1) An additional statement confirming that the self-insurer's current U.S. assets, including those of consolidated subsidiaries held in the U.S., not including pledged assets or stock not publicly traded, exceed the current U.S. liabilities, and the self-insurers net worth exceeds the amount of the requested self-insurance; or

(2) A statement, based on an analysis of the self-insurer's financial position, which shows that sufficient assets or cash flow, other than which might be damaged as a result of a pollution incident, are available which may be liquidated to provide the funds necessary to retire a claim for the amount of the self-insurance without placing the self-insurer in an insolvent position.

(b) The statements required by paragraphs (a) (1) and (2) of this section must be prepared and submitted by the involved Certified Public Accountant when the required financial statements are prepared in consolidated form and the liability represents less than the full financial backing of the consolidated entity, otherwise they may be prepared and submitted by the Treasurer or equivalent official.

(c) If the self-insurer files a Securities and Exchange Commission Form 10–K report, a copy of the self-insurer's most recent 10–K report must be filed with the Fund Administrator within 120 days after the end of the fiscal year to which it relates, in addition to filing the most recent 10–K report with the initial application.

(d) Each self-insurer must file annually with the Fund Administrator, copies of documents required under paragraph (a) of this section, within 120 days after the close of the self-insurer's fiscal accounting period. If a self-insurer files a 10–K report with the Fund Administrator under paragraph (c) of this section which contains some of the financial statements required in paragraph (a), a separate filing of those specific statements need not be made.

§ 135.215 Certification.

(a) Applicants shall:

(1) If the facility is in existence before September 17, 1979, apply for a Certificate of Financial Responsibility before September 17, 1979.

(2) If the offshore facility is not in existence on September 17, 1979, apply for a Certificate of Financial Responsibility at least 45 days before placing the offshore facility into operation or coverage becomes effective.

(3) If submitting an application to include an additional facility under previously established evidence of financial responsibility, apply for a Certificate of Financial Responsibility as early as possible before the anticipated date of desired coverage.

(b) Each application for a Certificate of Financial Responsibility must be made on a Coast Guard prescribed Application for Certificate of Financial Responsibility form, available from the Fund Administrator or any Coast Guard District Office. This form must be submitted for each facility; however, if evidence of financial responsibility has been previously established in an amount sufficient to meet § 135.203 (a), no additional evidence need be submitted with the application.

(c) Each application form submitted under this section must be signed by the applicant. A written statement proving authority to sign must also be

submitted where the signer is not disclosed as an individual (sole proprietor) applicant, a partner in a partnership applicant, or a director or other officer of a corporate applicant.

(d) Financial data or other information submitted under this section that is proprietary in nature, or constitutes a trade secret, must be clearly designated as such to insure confidential treatment by the Fund Administrator, under 5 U.S.C. 552, the Freedom of Information Act, which provides for exemption from disclosure of trade secret data.

(e) If any of the information submitted for certification is determined by the Fund Administrator to be insufficient the Fund Administrator may require additional information before final consideration of the application.

(f) Certificates, as issued, are to be considered property of the U.S. Government, are not to be altered in any manner, and must be surrendered on demand when revoked in accordance with § 135.223 of this subpart.

(g) Applicants shall obtain a Certificate of Financial Responsibility for each facility.

§ 135.219 Notification of changes affecting certification.

(a) Each owner, operator, or guarantor of an offshore facility shall within ten days notify the Fund Administrator in writing when any changes occur which prevent the owner, operator, or guarantor, from meeting the obligations for which a Certificate of Financial Responsibility has been issued.

(b) Based on notice of a change in financial capability under paragraph (a) of this section, the Fund Administrator may revoke a Certificate of Financial Responsibility.

§ 135.221 Reapplication for certification.

(a) If a Certificate of Financial Responsibility becomes invalid for any reason, an application for a new certificate must be immediately submitted to the Fund Administrator in accordance with § 135.204.

§ 135.223 Certificates, denial or revocation.

(a) A certificate may be denied or revoked for any of the following reasons:

(1) Making any willfully false statement to the Fund Administrator in connection with establishing or maintaining evidence of financial responsibility.

(2) Failure of an applicant or certificant to establish or maintain evidence of financial responsibility as required by the regulations in this subpart.

(3) Failure to comply with or respond to inquiries, regulations, or orders of the Fund Administrator concerning establishing or maintaining evidence of financial responsibility.

(4) Failure to timely file the reports or documents required by § 135.213 (c) and (d).

(5) Cancellation or termination of any insurance policy, surety bond, indemnity, or guaranty issued under this subpart or modification thereto which reduces the financial capacity of the applicant or certificant to meet the requirements of this subpart, unless substitute evidence of financial responsibility has been submitted to and accepted by the Fund Administrator.

(b) Denial or revocation of a certificate shall be immediate and without prior notice in a case where the applicant or certificant:

(1) Is no longer the owner or operator of the offshore facility in question;

(2) Fails to furnish acceptable evidence of financial responsibility in support of an application; or

(3) Permits the cancellation or termination of the insurance policy, surety bond, indemnity, or guaranty upon which the continued validity of the certificate is based.

(c) In any other case, before the denial or revocation of a certificate, the Fund Administrator advises the applicant or certificant, in writing, of the intention to deny or revoke the certificate, and shall state the reason therefor.

(d) If the reason for an intended revocation is failure to file the reports or documents required by § 135.213 (c) and (d) the revocation shall be effective 10 days after the date of receipt of the notice of intention to revoke, unless the

certificant shall, before revocation, submit the required material or demonstrate that the required material was timely filed.

(e) If the intended denial or revocation is based upon one of the reasons in paragraph (a)(1) or (a)(3) of this section, the applicant or certificant may request, in writing, a hearing to show that the applicant or certificant is in compliance with this subpart. If the applicant or certificant fails to file a timely request for a hearing, the denial or revocation is effective 10 days after receipt of the notice.

(f) If a request for a hearing under paragraph (e) of this section is received by the Fund Administrator within 10 days after the date of receipt of a notice of intention to deny or revoke, the Fund Administrator grants a hearing and notifies the requesting party of the date, time, and location of the hearing. If a requesting party fails to enter an appearance at the scheduled hearing, or in lieu thereof fails to submit written evidence for the consideration of the hearing official, denial or revocation is effective as of the scheduled date and time of the hearing, unless an extension of time is granted by the Fund Administrator for good cause shown.

(g) Hearings under this section are informal and are conducted by an official designated by the Fund Administrator. The official conducting the hearing considers all relevant material submitted and makes recommendations to the Fund Administrator.

(h) The Fund Administrator's decision is final agency action.

Subpart D—Notification of Pollution Incidents

§ 135.303 Definitions.

As used in this subpart:

Occurrences which pose an imminent threat of oil pollution means those incidents that are likely to result in a discharge of oil and include, but are not limited to: vessel collisions, grounding or stranding; structural failure in a tank, pipeline or other oil handling system; fire, explosion or other events which may cause structural damage to a vessel or offshore facility.

[CGD 77–055, 44 FR 16868, Mar. 19, 1979, as amended by CGD 91–035, 57 FR 36316, Aug. 12, 1992]

§ 135.305 Notification procedures.

(a) The person in charge of a vessel or offshore facility that is involved in an incident, including occurrences which pose an imminent threat of oil pollution shall, as soon as that person has knowledge of the incident, immediately notify by telephone, radio telecommunication or a similar rapid means of communication, in the following order of preference:

(1) (Within or offshore of the 48 contiguous States only) The Duty Officer, National Response Center, U.S. Coast Guard, (CG–3112), 2100 2nd St. SW., Stop 7238, Washington, DC 20593–7238, *toll free telephone number:* 800–424–8802, *direct telephone:* 202–267–2675, or *Fax:* 202–267–1322; or

(2) The commanding officer or supervisor of any Coast Guard Sector Office, Captain of the Port Office, Marine Safety Unit or Port Safety Detachment in the vicinity of the incident; or

(3) The commanding officer or officer in charge of any other Coast Guard unit in the vicinity of the incident; or

(4) The Commander of any Coast Guard District.

(b) Notification given in accordance with this subpart constitutes fulfillment of the requirements of subpart B of 33 CFR Part 153 concerning Notice of the Discharge of Oil.

[CGD 77–055, 44 FR 16868, Mar. 19, 1979, as amended by USCG–1998–3799, 63 FR 35530, June 30, 1998; USCG–2006–25150, 71 FR 39209, July 12, 2006; USCG–2006–25556, 72 FR 36328, July 2, 2007; USCG–2008–0179, 73 FR 35013, June 19, 2008; USCG–2010–0351, 75 FR 36283, June 25, 2010]

§ 135.307 Notification contents.

(a) In each notification provided under § 135.305, the person in charge of the vessel or offshore facility involved in the incident shall provide his or her name and telephone number, or radio call sign, and, to the extent known, the:

(1) Location, date and time of the incident;

(2) Quantity of oil involved;

(3) Cause of the incident;

(4) Name or other identification of the vessel or offshore facility involved;

(5) Size and color of any slick or sheen and the direction of movement;

(6) Observed on scene weather conditions, including wind speed and direction, height and direction of seas, and any tidal or current influence present;

(7) Actions taken or contemplated to secure the source or contain and remove or otherwise control the discharged oil;

(8) Extent of any injuries or other damages incurred as a result of the incident;

(9) Observed damage to living natural resources; and

(10) Any other information deemed relevant by the reporting party or requested by the person receiving the notification.

(b) The person giving notification of an incident must not delay notification to gather all required information and must provide any information not immediately available when it becomes known.

Subpart E—Access, Denial, and Detention

§ 135.401 Access to vessel, Certificates of Financial Responsibility.

(a) The owner, operator, master or agent of any vessel subject to the Act shall, upon request by any Coast Guard officer or petty officer, permit access to the vessel and produce for examination the Certificate of Financial Responsibility.

§ 135.403 Sanctions for failure to produce vessel Certificates of Financial Responsibility.

(a) The Captain of the Port issues denial or detention orders to the owner, operator, agent, or master of any vessel that cannot show upon request a valid Certificate of Financial Responsibility issued under the Act.

(b) A denial order forbids entry of any vessel subject to the Act to any port or place in the United States or to the navigable waters of the United States.

(c) A detention order detains any vessel subject to the Act at the port or place in the United States from which it is about to depart for any other port or place in the United States.

(d) The Captain of the Port terminates a denial or detention order when the owner, operator, agent, or master of a vessel furnishes adequate evidence that the certification of financial responsibility requirements under the Act have been met.

§ 135.405 Appeal provisions.

(a) The owner, operator, agent or master of a vessel issued a denial or detention order under this subpart may petition the District Commander in any manner to review that order.

(b) Upon completion of review, the District Commander affirms, sets aside, or modifies the order.

(c) Unless otherwise determined by the District Commander a denial or detention order remains in effect pending the outcome of any petition or appeal of that order.

(d) The District Commander acts on all petitions or appeals within 10 days of receipt.

(e) The decision of the District Commander is final agency action.

PART 136—OIL SPILL LIABILITY TRUST FUND; CLAIMS PROCEDURES; DESIGNATION OF SOURCE; AND ADVERTISEMENT

Subpart A—General

Sec.
136.1 Purpose and applicability.
136.3 Information.
136.5 Definitions.
136.7 Foreign claimants.
136.9 Falsification of claims.

Subpart B—General Procedure

136.101 Time limitations on claims.
136.103 Order of presentment.
136.105 General requirements for a claim.
136.107 Subrogated claims.
136.109 Removal costs and multiple items of damages.
136.111 Insurance.
136.113 Other compensation.
136.115 Settlement and notice to claimant.

Subpart C—Procedures for Particular Claims

REMOVAL COSTS

136.201 Authorized claimants.
136.203 Proof.

136.205 Compensation allowable.

NATURAL RESOURCES

136.207 Authorized claimants.
136.209 Proof.
136.211 Compensation allowable.

REAL OR PERSONAL PROPERTY

136.213 Authorized claimants.
136.215 Proof.
136.217 Compensation allowable.

SUBSISTENCE USE

136.219 Authorized claimants.
136.221 Proof.
136.223 Compensation allowable.

GOVERNMENT REVENUES

136.225 Authorized claimants.
136.227 Proof.
136.229 Compensation allowable.

PROFITS AND EARNING CAPACITY

136.231 Authorized claimants.
136.233 Proof.
136.235 Compensation allowable.

GOVERNMENT PUBLIC SERVICES

136.237 Authorized claimants.
136.239 Proof.
136.241 Compensation allowable.

Subpart D—Designation of Source and Advertisement

GENERAL

136.301 Purpose.
136.303 Definitions.

DESIGNATION OF SOURCE

136.305 Notice of designation.
136.307 Denial of designation.

ADVERTISEMENT

136.309 Advertisement determinations.
136.311 Types of advertisement.
136.313 Content of advertisement.

AUTHORITY: 33 U.S.C. 2713(e) and 2714; Sec. 1512 of the Homeland Security Act of 2002, Pub. L. 107–296, Title XV, Nov. 25, 2002, 116 Stat. 2310 (6 U.S.C. 552(d)); E.O. 12777, 56 FR 54757, 3 CFR, 1991 Comp., p. 351, as amended by E.O. 13286, 68 FR 10619, 3 CFR, 2004 Comp., p.166; Department of Homeland Security Delegation No. 0170.1, para. 2(80).

SOURCE: CGD 91–035, 57 FR 36316, Aug. 12, 1992, unless otherwise noted.

Subpart A—General

§ 136.1 Purpose and applicability.

(a) This part prescribes regulations for—

(1) Presentation, filing, processing, settlement, and adjudication of claims authorized to be presented to the Oil Spill Liability Trust Fund (the Fund) under section 1013 of the Oil Pollution Act of 1990 (the Act) (33 U.S.C. 2713) for certain uncompensated removal costs or uncompensated damages resulting from the discharge, or substantial threat of discharge, of oil from a vessel or facility into or upon the navigable waters, adjoining shorelines, or the exclusive economic zone;

(2) Designation of the source of the incident, notification to the responsible party of the designation, and advertisement of the designation and claims procedures; and

(3) Other related matters.

(b) This part applies to claims resulting from incidents occurring after August 18, 1990.

(c) Nothing in this part—

(1) Preempts the authority of any State or political subdivision thereof from imposing any additional liability or requirements with respect to—

(i) The discharge of oil or other pollution by oil within such State; or

(ii) Any removal activities in connection with such a discharge; or

(2) Affects or modifies in any way the obligations or liabilities of any person under the Solid Waste Disposal Act (42 U.S.C. 6901 *et seq.*) or State law, including common law; or

(3) Affects the authority of any State—

(i) To establish, or to continue in effect, a fund any purpose of which is to pay for costs or damages arising out of, or directly resulting from, oil pollution or the substantial threat of oil pollution; or

(ii) To require any person to contribute to such a fund; or

(4) Affects the authority of the United States or any State or political subdivision thereof to impose additional liability or additional requirements relating to a discharge, or substantial threat of a discharge, of oil.

§ 136.3 Information.

Anyone desiring to file a claim against the Fund may obtain general information on the procedure for filing a claim from the Director, National Pollution Funds Center, NPFC MS 7100, U.S. Coast Guard, 4200 Wilson Blvd., Suite 1000, Arlington, VA 20598–7100, (800) 280–7118.

[CGD 91–035, 57 FR 36316, Aug. 12, 1992, as amended by USCG–2009–0416, 74 FR 27441, June 10, 2009; USCG–2012–0306, 77 FR 37315, June 21, 2012]

§ 136.5 Definitions.

(a) As used in this part, the following terms have the same meaning as set forth in sections 1001 and 1007(c) of the Act (33 U.S.C. 2701 and 2707(c)): *Claim, claimant, damages, discharge, exclusive economic zone, facility, foreign claimant, foreign offshore unit, Fund, guarantor, incident, National Contingency Plan, natural resources, navigable waters, offshore facility, oil, onshore facility, owner or operator, person, removal costs, responsible party, State, United States, and vessel.*

(b) As used in this part—

Act means title I of the Oil Pollution Act of 1990 (Pub. L. 101–380; 33 U.S.C. 2701 through 2719).

Director, NPFC, means the person in charge of the U.S. Coast Guard National Pollution Funds Center or that person's authorized representative.

FOSC means the Federal On-Scene Coordinator designated under the National Contingency Plan or that person's authorized representative.

NPFC means the Director, National Pollution Funds Center, NPFC MS 7100, U.S. Coast Guard, 4200 Wilson Blvd., Suite 1000, Arlington, VA 20598–7100.

[CGD 91–035, 57 FR 36316, Aug. 12, 1992, as amended by USCG–2009–0416, 74 FR 27441, June 10, 2009; USCG–2012–0306, 77 FR 37315, June 21, 2012]

§ 136.7 Foreign claimants.

In addition to other applicable limitations on presenting claims to the Fund, claims by foreign claimants to recover removal costs or damages may be presented only when the requirements of section 1007 of the Act (33 U.S.C. 2707) are met.

§ 136.9 Falsification of claims.

Persons submitting false claims or making false statements in connection with claims under this part may be subject to prosecution under Federal law, including but not limited to 18 U.S.C. 287 and 1001. In addition, persons submitting written documentation in support of claims under this part which they know, or should know, is false or omits a material fact may be subject to a civil penalty for each claim. If any payment is made on the claim, the claimant may also be subject to an assessment of up to twice the amount claimed. These civil sanctions may be imposed under the Program Fraud Civil Remedies Act, 31 U.S.C. 3801–3812, as implemented in 6 CFR part 13.

[CGD 91–035, 57 FR 36316, Aug. 12, 1992, as amended by CGD 96–052, 62 FR 16703, Apr. 8, 1997; USCG–2013–0397, 78 FR 39175, July 1, 2013]

Subpart B—General Procedure

§ 136.101 Time limitations on claims.

(a) Except as provided under section 1012(h)(3) of the Act (33 U.S.C. 2712(h)(3)) (minors and incompetents), the Fund will consider a claim only if presented in writing to the Director, NPFC, within the following time limits:

(1) For damages, within three years after—

(i) The date on which the injury and its connection with the incident in question were reasonably discoverable with the exercise of due care.

(ii) In the case of natural resources damages under section 1002(b)(2)(A) of the Act (33 U.S.C. 2702(b)(2)(A)), the date under paragraph (a)(1)(i) of this section, or within three years from the date of completion of the natural resources damage assessment under section 1006(e) of the Act (33 U.S.C. 2706(e)), whichever is later.

(2) For removal costs, within six years after the date of completion of all removal actions for the incident. As used in this paragraph, ''date of completion of all removal actions'' is defined as the actual date of completion of all removal actions for the incident or the date the FOSC determines that the removal actions which form the

basis for the costs being claimed are completed, whichever is earlier.

(b) Unless the Director, NPFC, directs in writing that the claim be submitted elsewhere, a claim is deemed presented on the date the claim is actually received at the Director, National Pollution Funds Center, NPFC MS 7100, U.S. Coast Guard, 4200 Wilson Blvd., Suite 1000, Arlington, VA 20598–7100. If the Director, NPFC, directs that the claim be presented elsewhere, the claim is deemed presented on the date the claim is actually received at the address in the directive.

[CGD 91–035, 57 FR 36316, Aug. 12, 1992; 57 FR 41104, Sept. 9, 1992, as amended by USCG–2009–0416, 74 FR 27441, June 10, 2009; USCG–2012–0306, 77 FR 37315, June 21, 2012]

§ 136.103 Order of presentment.

(a) Except as provided in paragraph (b) of this section, all claims for removal costs or damages must be presented first to the responsible party or guarantor of the source designated under § 136.305.

(b) Claims for removal costs or damages may be presented first to the Fund only—

(1) By any claimant, if the Director, NPFC, has advertised, or otherwise notified claimants in writing, in accordance with § 136.309(e);

(2) By a responsible party who may assert a claim under section 1008 of the Act (33 U.S.C. 2708);

(3) By the Governor of a State for removal costs incurred by that State; or

(4) By a United States claimant in a case where a foreign offshore unit has discharged oil causing damage for which the Fund is liable under section 1012(a) of the Act (33 U.S.C. 2712(a)).

(c) If a claim is presented in accordance with paragraph (a) of this section and—

(1) Each person to whom the claim is presented denies all liability for the claim; or

(2) The claim is not settled by any person by payment within 90 days after the date upon which (A) the claim was presented, or (B) advertising was begun pursuant to § 136.309(d), whichever is later, the claimant may elect to commence an action in court against the responsible party or guarantor or to present the claim to the Fund.

(d) No claim of a person against the Fund will be approved or certified for payment during the pendency of an action by the person in court to recover costs which are the subject of the claim.

[CGD 91–035, 57 FR 36316, Aug. 12, 1992; 57 FR 41104, Sept. 9, 1992]

§ 136.105 General requirements for a claim.

(a) The claimant bears the burden of providing all evidence, information, and documentation deemed necessary by the Director, NPFC, to support the claim.

(b) Each claim must be in writing for a sum certain for compensation for each category of uncompensated damages or removal costs (as described in Subpart C of this part) resulting from an incident. If at any time during the pendency of a claim against the Fund the claimant receives any compensation for the claimed amounts, the claimant shall immediately amend the claim.

(c) Each claim must be signed in ink by the claimant certifying to the best of the claimant's knowledge and belief that the claim accurately reflects all material facts.

(d) In addition to the other requirements of this section, any claim presented by a legal representative of the claimant must also be signed by the legal representative and—

(1) Be presented in the name of the claimant;

(2) Show the title or legal capacity of the representative; and

(3) Provide proof of authority to act for the claimant.

(e) Each claim must include at least the following, as applicable:

(1) The full name, street and mailing addresses of residence and business, and telephone numbers of the claimant.

(2) The date, time, and place of the incident giving rise to the claim.

(3) The identity of the vessel, facility, or other entity causing or suspected to have caused the removal costs or damages claimed and the basis for such identity or belief.

(4) A general description of the nature and extent of the impact of the incident, the costs associated with removal actions, and damages claimed, by category as delineated in Subpart C of this part, including, for any property, equipment, or similar item damaged, the full name, street and mailing address, and telephone number of the actual owner, if other than the claimant.

(5) An explanation of how and when the removal costs or damages were caused by, or resulted from, an incident.

(6) Evidence to support the claim.

(7) A description of the actions taken by the claimant, or other person on the claimant's behalf, to avoid or minimize removal costs or damages claimed.

(8) The reasonable costs incurred by the claimant in assessing the damages claimed. This includes the reasonable costs of estimating the damages claimed, but not attorney's fees or other administrative costs associated with preparation of the claim.

(9) To the extent known or reasonably identifiable by the claimant, the full name, street and mailing address, and telephone number of each witness to the incident, to the discharge, or to the removal costs or damages claimed, along with a brief description of that person's knowledge.

(10) A copy of written communications and the substance of verbal communications, if any, between the claimant and the responsible party or guarantor of the source designated under § 136.305 and a statement indicating that the claim was presented to the responsible party or guarantor, the date it was presented, that it was denied or remains not settled and, if known, the reason why it was denied or remains not settled.

(11) If the claimant has insurance which may cover the removal costs or damages claimed, the information required under § 136.111.

(12) A statement by the claimant that no action has been commenced in court against the responsible party or guarantor of the source designated under § 136.305 or, if an action has been commenced, a statement identifying the claimant's attorney and the attorney's address and phone number, the civil action number, and the court in which the action is pending.

(13) In the discretion of the Director, NPFC, any other information deemed relevant and necessary to properly process the claim for payment.

§ 136.107 Subrogated claims.

(a) The claims of subrogor (e.g., insured) and subrogee (e.g., insurer) for removal costs and damages arising out of the same incident should be presented together and must be signed by all claimants.

(b) A fully subrogated claim is payable only to the subrogee.

(c) A subrogee must support a claim in the same manner as any other claimant.

§ 136.109 Removal costs and multiple items of damages.

(a) A claimant must specify all of the claimant's known removal costs or damages arising out of a single incident when submitting a claim.

(b) Removal costs and each separate category of damages (as described in subpart C of this part) must be separately listed with a sum certain attributed to each type and category listed.

(c) At the sole discretion of the Director, NPFC, removal costs and each separate category of damages may be treated separately for settlement purposes.

§ 136.111 Insurance.

(a) A claimant shall provide the following information concerning any insurance which may cover the removal costs or damages for which compensation is claimed:

(1) The name and address of each insurer.

(2) The kind and amount of coverage.

(3) The policy number.

(4) Whether a claim has been or will be presented to an insurer and, if so, the amount of the claim and the name of the insurer.

(5) Whether any insurer has paid the claim in full or in part or has indicated whether or not payment will be made.

(b) If requested by the Director, NPFC, the claimant shall provide a copy of the following material:

(1) All insurance policies or indemnification agreements.

(2) All written communications, and a summary of all oral communications, with any insurer or indemnifier.

(c) A claimant shall advise the Director, NPFC, of any changes in the information provided under this section.

§ 136.113 Other compensation.

A claimant must include an accounting, including the source and value, of all other compensation received, applied for, or potentially available as a consequence of the incident out of which the claim arises including, but not limited to, monetary payments, goods or services, or other benefits.

§ 136.115 Settlement and notice to claimant.

(a) Payment in full, or acceptance by the claimant of an offer of settlement by the Fund, is final and conclusive for all purposes and, upon payment, constitutes a release of the Fund for the claim. In addition, acceptance of any compensation from the Fund precludes the claimant from filing any subsequent action against any person to recover costs or damages which are the subject of the compensated claim. Acceptance of any compensation also constitutes an agreement by the claimant to assign to the Fund any rights, claims, and causes of action the claimant has against any person for the costs and damages which are the subject of the compensated claims and to cooperate reasonably with the Fund in any claim or action by the Fund against any person to recover the amounts paid by the Fund. The cooperation shall include, but is not limited to, immediately reimbursing the Fund for any compensation received from any other source for the same costs and damages and providing any documentation, evidence, testimony, and other support, as may be necessary for the Fund to recover from any person.

(b) Claimant's failure to accept an offer of settlement within 60 days after the date the offer was mailed to the claimant automatically voids the offer. The Director, NPFC, reserves the right to revoke an offer at any time.

(c) A claimant will be notified in writing sent by certified or registered mail whenever a claim against the Fund is denied. The failure of the Director, NPFC, to make final disposition of a claim within six months after it is filed shall, at the option of the claimant any time thereafter, be deemed a final denial of the claim.

(d) The Director, NPFC, upon written request of the claimant or of a person duly authorized to act on the claimant's behalf, reconsiders any claim denied. The request for reconsideration must be in writing and include the factual or legal grounds for the relief requested, providing any additional support for the claim. The request must be received by the Director, NPFC, within 60 days after the date the denial was mailed to the claimant or within 30 days after receipt of the denial by the claimant, whichever date is earlier. Reconsideration may only be requested once for each claim denied. The Director, NPFC will provide the claimant seeking reconsideration with written notification of the decision within 90 days after receipt of the request for reconsideration. This written decision is final. The failure of the Director, NPFC, to make final disposition of a reconsideration within 90 days after it is received shall, at the option of the claimant any time thereafter, be deemed a final denial of the reconsideration.

Subpart C—Procedures for Particular Claims

REMOVAL COSTS

§ 136.201 Authorized claimants.

A claim for removal costs may be presented by any claimant.

§ 136.203 Proof.

In addition to the requirements of Subparts A and B of this part, a claimant must establish—

(a) That the actions taken were necessary to prevent, minimize, or mitigate the effects of the incident;

(b) That the removal costs were incurred as a result of these actions;

(c) That the actions taken were determined by the FOSC to be consistent with the National Contingency Plan or were directed by the FOSC.

§ 136.205 Compensation allowable.

The amount of compensation allowable is the total of uncompensated reasonable removal costs of actions taken that were determined by the FOSC to be consistent with the National Contingency Plan or were directed by the FOSC. Except in exceptional circumstances, removal activities for which costs are being claimed must have been coordinated with the FOSC.

NATURAL RESOURCES

§ 136.207 Authorized claimants.

(a) Claims for uncompensated natural resource damages may be presented by an appropriate natural resources trustee. However, in order to facilitate the processing of these claims with respect to a single incident where multiple trustees are involved and to prevent double recovery, the affected trustees should select a lead administrative trustee who will present consolidated claims on behalf of the trustees.

(b) A trustee may present a claim for the reasonable cost of assessing natural resources damages separately from a claim for the cost of developing and implementing plans for the restoration, rehabilitation, replacement, or acquisition of the equivalent of the natural resources damaged.

§ 136.209 Proof.

In addition to the requirements of subparts A and B of this part, a trustee must do the following:

(a) Submit the assessment and restoration plans which form the basis of the claim.

(b) Provide documented costs and cost estimates for the claim. Final cost estimates for conducting damage assessments or implementing a restoration plan may form the basis for a claim against the Fund for an uncompensated natural resources damage claim.

(c) Identify all trustees who may be potential claimants for the same natural resources damaged.

(d) Certify the accuracy and integrity of any claim submitted to the Fund, and certify that any actions taken or proposed were or will be conducted in accordance with the Act and consistent with all applicable laws and regulations.

(e) Certify whether the assessment was conducted in accordance with applicable provisions of the natural resources damage assessment regulations promulgated under section 1006(e)(1) of the Act (33 U.S.C. 2706(e)(1)). Identify any other or additional damage assessment regulations or methodology utilized.

(f) Certify that, to the best of the trustee's knowledge and belief, no other trustee has the right to present a claim for the same natural resources damages and that payment of any subpart of the claim presented would not constitute a double recovery for the same natural resources damages.

§ 136.211 Compensation allowable.

(a) The amount of compensation allowable is the reasonable cost of assessing damages, and the cost of restoring, rehabilitating, replacing, or acquiring the equivalent of the damaged natural resources.

(b) In addition to any other provision of law respecting the use of sums recovered for natural resources damages, trustees shall reimburse the Fund for any amounts received from the Fund in excess of that amount required to accomplish the activities for which the claim was paid.

REAL OR PERSONAL PROPERTY

§ 136.213 Authorized claimants.

(a) A claim for injury to, or economic losses resulting from the destruction of, real or personal property may be presented only by a claimant either owning or leasing the property.

(b) Any claim for loss of profits or impairment of earning capacity due to injury to, destruction of, or loss of real or personal property must be included as subpart of the claim under this section and must include the proof required under § 136.233.

§ 136.215 Proof.

(a) In addition to the requirements of subparts A and B of this part, a claimant must establish—

(1) An ownership or leasehold interest in the property;

(2) That the property was injured or destroyed;

(3) The cost of repair or replacement; and

(4) The value of the property both before and after injury occurred.

(b) In addition, for each claim for economic loss resulting from destruction of real or personal property, the claimant must establish—

(1) That the property was not available for use and, if it had been, the value of that use;

(2) Whether or not substitute property was available and, if used, the costs thereof; and

(3) That the economic loss claimed was incurred as the result of the injury to or destruction of the property.

§ 136.217 Compensation allowable.

(a) The amount of compensation allowable for damaged property is the lesser of—

(1) Actual or estimated net cost of repairs necessary to restore the property to substantially the same condition which existed immediately before the damage;

(2) The difference between value of the property before and after the damage; or

(3) The replacement value.

(b) Compensation for economic loss resulting from the destruction of real or personal property may be allowed in an amount equal to the reasonable costs actually incurred for use of substitute commercial property or, if substitute commercial property was not reasonably available, in an amount equal to the net economic loss which resulted from not having use of the property. When substitute commercial property was reasonably available, but not used, allowable compensation for loss of use is limited to the cost of the substitute commercial property, or the property lost, whichever is less. Compensation for loss of use of noncommercial property is not allowable.

(c) Compensation for a claim for loss of profits or impairment of earning capacity under § 136.213(b) is limited to that allowable under § 136.235.

SUBSISTENCE USE

§ 136.219 Authorized claimants.

(a) A claim for loss of subsistence use of natural resources may be presented only by a claimant who actually uses, for subsistence, the natural resources which have been injured, destroyed, or lost, without regard to the ownership or management of the resources.

(b) A claim for loss of profits or impairment of earning capacity due to loss of subsistence use of natural resources must be included as part of the claim under this section and must include the proof required under § 136.233.

§ 136.221 Proof.

In addition to the requirements of subparts A and B of this part, a claimant must provide—

(a) The identification of each specific natural resource for which compensation for loss of subsistence use is claimed;

(b) A description of the actual subsistence use made of each specific natural resource by the claimant;

(c) A description of how and to what extent the claimant's subsistence use was affected by the injury to or loss of each specific natural resource;

(d) A description of each effort made by the claimant to mitigate the claimant's loss of subsistence use; and

(e) A description of each alternative source or means of subsistence available to the claimant during the period of time for which loss of subsistence is claimed, and any compensation available to the claimant for loss of subsistence.

§ 136.223 Compensation allowable.

(a) The amount of compensation allowable is the reasonable replacement cost of the subsistence loss suffered by the claimant if, during the period of time for which the loss of subsistence is claimed, there was no alternative source or means of subsistence available.

(b) The amount of compensation allowable under paragraph (a) of this section must be reduced by—

(1) All compensation made available to the claimant to compensate for subsistence loss;

(2) All income which was derived by utilizing the time which otherwise would have been used to obtain natural resources for subsistence use; and

(3) Overheads or other normal expenses of subsistence use not incurred as a result of the incident.

(c) Compensation for a claim for loss of profits or impairment of earning capacity under § 136.219(b) is limited to that allowable under § 136.235.

GOVERNMENT REVENUES

§ 136.225 Authorized claimants.

A claim for net loss of revenue due to the injury, destruction, or loss of real property, personal property, or natural resources may be presented only by an appropriate claimant sustaining the loss. As used in this section and § 136.277, ''revenue'' means taxes, royalties, rents, fees, and net profit shares.

§ 136.227 Proof.

In addition to the requirements of Subparts A and B, a claimant must establish—

(a) The identification and description of the economic loss for which compensation is claimed, including the applicable authority, property affected, method of assessment, rate, and method and dates of collection;

(b) That the loss of revenue was due to the injury to, destruction of, or loss of real or personal property or natural resources;

(c) The total assessment or revenue collected for comparable revenue periods; and

(d) The net loss of revenue.

§ 136.229 Compensation allowable.

The amount of compensation allowable is the total net revenue actually lost.

PROFITS AND EARNING CAPACITY

§ 136.231 Authorized claimants.

(a) A claim for loss of profits or impairment of earning capacity due to the injury to, destruction of, or loss of real or personal property or natural resources may be presented by a claimant sustaining the loss or impairment. The claimant need not be the owner of the damaged property or resources to recover for lost profits or income.

(b) A claim for loss of profits or impairment of earning capacity that also involves a claim for injury to, or economic losses resulting from destruction of, real or personal property must be claimed under § 136.213.

(c) A claim for loss of profits or impairment of earning capacity that also involves a claim for loss of subsistence use of natural resources must be claimed under § 136.219.

§ 136.233 Proof.

In addition to the requirements of subparts A and B of this part, a claimant must establish the following:

(a) That real or personal property or natural resources have been injured, destroyed, or lost.

(b) That the claimant's income was reduced as a consequence of injury to, destruction of, or loss of the property or natural resources, and the amount of that reduction.

(c) The amount of the claimant's profits or earnings in comparable periods and during the period when the claimed loss or impairment was suffered, as established by income tax returns, financial statements, and similar documents. In addition, comparative figures for profits or earnings for the same or similar activities outside of the area affected by the incident also must be established.

(d) Whether alternative employment or business was available and undertaken and, if so, the amount of income received. All income that a claimant received as a result of the incident must be clearly indicated and any saved overhead and other normal expenses not incurred as a result of the incident must be established.

§ 136.235 Compensation allowable.

The amount of compensation allowable is limited to the actual net reduction or loss of earnings or profits suffered. Calculations for net reductions or losses must clearly reflect adjustments for—

(a) All income resulting from the incident;

(b) All income from alternative employment or business undertaken;

(c) Potential income from alternative employment or business not undertaken, but reasonably available;

(d) Any saved overhead or normal expenses not incurred as a result of the incident; and

(e) State, local, and Federal taxes.

GOVERNMENT PUBLIC SERVICES

§ 136.237 Authorized claimants.

A claim for net costs of providing increased or additional public services during or after removal activities, including protection from fire, safety, or health hazards, caused by a discharge of oil may be presented only by a State or a political subdivision of a State incurring the costs.

§ 136.239 Proof.

In addition to the requirements of subparts A and B of this part, a claimant must establish—

(a) The nature of the specific public services provided and the need for those services;

(b) That the services occurred during or after removal activities;

(c) That the services were provided as a result of a discharge of oil and would not otherwise have been provided; and

(d) The net cost for the services and the methods used to compute those costs.

§ 136.241 Compensation allowable.

The amount of compensation allowable is the net cost of the increased or additional service provided by the State or political subdivision.

Subpart D—Designation of Source and Advertisement

GENERAL

§ 136.301 Purpose.

This subpart prescribes the requirements concerning designation of the source or sources of the discharge or threat of discharge and advertisement of these designations, including the procedures by which claims may be presented to the responsible party or guarantor.

§ 136.303 Definitions.

As used in this subpart—

Advertisement means the dissemination of information, including but not limited to paid advertisements, that are reasonably calculated to advise the public how to present a claim.

Designated source means a source designated under § 136.305.

DESIGNATION OF SOURCE

§ 136.305 Notice of designation.

(a) When information of an incident is received, the source or sources of the discharge or threat are designated, where possible and appropriate. If the designated source is a vessel or facility, the responsible party and the guarantor, if known, are notified by telephone, telefax, or other rapid means of that designation. The designation will be confirmed by a written Notice of Designation.

(b) A Notice of Designation normally contains, to the extent known—

(1) The name of the vessel or facility designated as the source;

(2) The location, date, and time of the incident;

(3) The type and quantity of oil involved;

(4) The date of the designation;

(5) The procedures for accepting or denying the designation; and

(6) The name, address, telephone number, and, if available, telefax number of the responsible Federal official to whom further communication regarding the incident, advertisement of the incident, or denial of designation should be directed.

[USCG–91–035, 57 FR 36316, Aug. 12, 1992, as amended by USCG–2012–0306, 77 FR 37315, June 21, 2012]

§ 136.307 Denial of designation.

(a) Within five days after receiving a Notice of Designation under § 136.305, the responsible party or guarantor may deny the designation.

(b) A denial of designation must—

(1) Be in writing;

(2) Identify the Notice of Designation;

(3) Give the reasons for the denial and provide a copy of all supporting documents; and

(4) Be submitted to the official named in the Notice of Designation.

(c) A denial is deemed received on the date the denial is actually received by the official named in the Notice of Designation.

ADVERTISEMENT

§ 136.309 Advertisement determinations.

(a) The Director, NPFC, determines for each incident the type, geographic scope, frequency, and duration of advertisement required.

(b) In making the determination specified in paragraph (a) of this section, the Director, NPFC, may consider—

(1) The nature and extent of economic losses that have occurred or are likely to occur;

(2) The potential claimants who are likely to incur economic losses;

(3) The geographical area that is or will likely be affected;

(4) The most effective method of reasonably notifying potential claimants of the designation and procedures of submitting claims; and

(5) Relevant information or recommendations, if any, submitted by, or on behalf of, the responsible party or guarantor of the designated source.

(c) The Director, NPFC, provides the specific requirements for advertisement for each incident to the responsible party or guarantor of the designated source.

(d) If a responsible party or guarantor has not denied designation in accordance with § 136.307, the party or guarantor shall advertise, in accordance with the requirements of this subpart, the designation and the procedures by which claims may be presented. The advertisement must begin not later than 15 days after the date of the designation made under § 136.305.

(e) If there is no designation under § 136.305, if the source of the discharge or threat is a public vessel, or if the responsible party and guarantor of the source designated have denied the designation or failed to meet the requirements for advertisement in this section, the Director, NPFC, may advertise procedures for presenting claims.

§ 136.311 Types of advertisement.

Advertisement required by the Director, NPFC, will normally include one or more of the following:

(a) Paid advertisements in a newspaper or newspapers having general circulation in the area designated by the Director, NPFC.

(b) Notice posted in marinas, marine supply stores, bait and tackle shops, and other appropriate business establishments or public facilities in the area designated by the Director, NPFC.

(c) News releases to newspapers, radio stations, television stations, and cable services having general circulation in the area designated by the Director, NPFC.

(d) Other means approved by the Director, NPFC, under the circumstances of each case.

§ 136.313 Content of advertisement.

Each advertisement required by this subpart may be required to contain the following information or to indicate where this information may be contained:

(a) Location, date, and time of the incident.

(b) Geographical area affected, as determined by the FOSC or Director, NPFC.

(c) Type and quantity of oil involved.

(d) Name or other description of the source designated by the FOSC or Director, NPFC.

(e) Name of the responsible party and guarantor of the designated source.

(f) Name, address, telephone number, office hours, and work days of the person or persons to whom claims are to be presented and from whom claim information can be obtained.

(g) The procedures by which a claim may be presented.

(h) Other information required by the Director, NPFC, under the circumstances of each case.

PART 137—OIL SPILL LIABILITY: STANDARDS FOR CONDUCTING ALL APPROPRIATE INQUIRIES UNDER THE INNOCENT LANDOWNER DEFENSE

Subpart A—Introduction

Sec.
137.1 Purpose and applicability.
137.5 Disclosure obligations.
137.10 How are terms used in this part defined?
137.15 References: Where can I get a copy of the publication mentioned in this part?

Subpart B—Standards and Practices

137.18 Duties of persons specified in §137.1(a).
137.20 May industry standards be used to comply with this regulation?
137.25 Qualifications of the environmental professional.
137.30 Objectives and performance factors.
137.33 General all appropriate inquiries requirements.
137.35 Inquiries by an environmental professional.
137.40 Additional inquiries.
137.45 Interviews with past and present owners, operators, and occupants.
137.50 Reviews of historical sources of information.
137.55 Searches for recorded environmental cleanup liens.
137.60 Reviews of Federal, State, tribal, and local government records.
137.65 Visual inspections of the facility, the real property on which the facility is located, and adjoining properties.
137.70 Specialized knowledge or experience on the part of persons specified in §137.1(a).
137.75 The relationship of the purchase price to the value of the facility and the real property on which the facility is located, if oil was not at the facility or on the real property.
137.80 Commonly known or reasonably ascertainable information about the facility and the real property on which the facility is located.
137.85 The degree of obviousness of the presence or likely presence of oil at the facility and the real property on which the facility is located and the ability to detect the oil by appropriate investigation.

AUTHORITY: 33 U.S.C. 2703(d)(4); Sec. 1512 of the Homeland Security Act of 2002, Pub. L. 107–296, Title XV, Nov. 25, 2002, 116 Stat. 2310 (6 U.S.C. 552(d)); Department of Homeland Security Delegation No. 14000.

SOURCE: USCG–2006–25708, 73 FR 2150, Jan. 14, 2008, unless otherwise noted.

Subpart A—Introduction

§ 137.1 Purpose and applicability.

(a) In general under the Oil Pollution Act of 1990 (33 U.S.C. 2701, *et seq.*), an owner or operator of a facility (as defined in §137.10) that is the source of a discharge, or a substantial threat of discharge, of oil into the navigable waters or adjoining shorelines or the exclusive economic zone is liable for damages and removal costs resulting from the discharge or threat. However, if that person can demonstrate, among other criteria not addressed in this part, that they did not know and had no reason to know at the time of their acquisition of the real property on which the facility is located that oil was located on, in, or at the facility, the person may be eligible for the innocent landowner defense to liability under 33 U.S.C. 2703(d)(4). One element of the defense is that the person made all appropriate inquiries into the nature of the real property on which the facility is located before acquiring it. The purpose of this part is to prescribe standards and practices for making those inquiries.

(b) Under 33 U.S.C. 2703(d)(4)(E), this part does not apply to real property purchased by a non-governmental entity or non-commercial entity for residential use or other similar uses where a property inspection and a title search reveal no basis for further investigation. In those cases, the property inspection and title search satisfy the requirements of this part.

(c) This part does not affect the existing OPA 90 liability protections for State and local governments that acquire a property involuntarily in their functions as sovereigns under 33 U.S.C. 2703(d)(2)(B). Involuntary acquisition of properties by State and local governments fall under the provisions of 33 U.S.C. 2703(d)(2)(B), not under the all-appropriate-inquiries provision of 33 U.S.C. 2703(d)(4) and this part.

§ 137.5 Disclosure obligations.

(a) Under 33 U.S.C. 2703(c)(1), persons specified in §137.1(a), including environmental professionals, must report the incident as required by law if they know or have reason to know of the incident.

(b) This part does not limit or expand disclosure obligations under any Federal, State, tribal, or local law. It is the obligation of each person, including environmental professionals, conducting inquiries to determine his or her respective disclosure obligations under Federal, State, tribal, and local law and to comply with them.

§ 137.10 How are terms used in this part defined?

(a) The following terms have the same definitions as in 33 U.S.C. 2701: *damages*; *discharge*; *incident*; *liable* or *liability*; *oil*; *owner or operator*; and *removal costs*.

(b) As used in this part—

Abandoned property means a property that, because of its general disrepair or lack of activity, a reasonable person could believe that there is an intent on the part of the current owners to surrender their rights to the property.

Adjoining property means real property the border of which is shared in part or in whole with that of the subject property or that would be shared in part or in whole with that of the property but for a street, road, or other public thoroughfare separating the properties.

Data gap means a lack of, or inability to, obtain information required by subpart B of this part despite good faith efforts by the environmental professional or persons specified in § 137.1(a), as appropriate, to gather the information under § 137.33.

Environmental professional means an individual who meets the requirements of § 137.25.

Facility means any structure, group of structures, equipment, or device (other than a vessel) which is used for one or more of the following purposes: exploring for, drilling for, producing, storing, handling, transferring, processing, or transporting oil. This term includes any motor vehicle, rolling stock, or pipeline used for one or more of these purposes.

Good faith means the absence of any intention to seek an unfair advantage or to defraud another party; an honest and sincere intention to fulfill one's obligations in the conduct or transaction concerned.

Institutional controls means non-engineered instruments, such as administrative and/or legal controls, that help to minimize the potential for human exposure to oil discharge and/or protect the integrity of a removal action.

Relevant experience means participation in the performance of all-appropriate-inquiries investigations, environmental site assessments, or other site investigations that may include environmental analyses, investigations, and remediation which involve the understanding of surface and subsurface environmental conditions and the processes used to evaluate these conditions and for which professional judgment was used to develop opinions regarding conditions indicative of the presence or likely presence of oil at the facility and the real property on which the facility is located.

§ 137.15 References: Where can I get a copy of the publication mentioned in this part?

Section 137.20 of this part refers to ASTM E 1527–05, Standard Practice for Environmental Site Assessments: Phase I Environmental Site Assessment Process. That document is available from ASTM International, 100 Barr Harbor Drive, P.O. Box C700, West Conshohocken, PA 19428–2959. It is also available for inspection at the Coast Guard National Pollution Funds Center, Law Library, 4200 Wilson Boulevard, Suite 1000, Arlington, VA.

[USCG–2009–0416, 74 FR 27441, June 10, 2009]

Subpart B—Standards and Practices

§ 137.18 Duties of persons specified in § 137.1(a).

In order to make all appropriate inquiries, persons seeking to establish the liability protection under § 137.1(a) must conduct the inquiries and investigations as required in this part and ensure that the inquiries and investigations required to be made by environmental professionals are made.

§ 137.20 May industry standards be used to comply with this regulation?

The industry standards in ASTM E 1527–05, (Referenced in § 137.15) may be

used to comply with the requirements set forth in §§137.45 through 137.85 of this part. Use of ASTM E 1527–05 for this purpose is optional and not mandatory.

§ 137.25 Qualifications of the environmental professional.

(a) An environmental professional is an individual who possesses sufficient specific education, training, and experience necessary to exercise professional judgment to develop opinions and conclusions regarding conditions indicative of the presence or likely presence of oil at a facility and the real property on which the facility is located sufficient to meet the objectives and performance factors in §137.30(a) and (b).

(1) Such a person must—

(i) Hold a current Professional Engineer's or Professional Geologist's license or registration from a State, tribe, or U.S. territory (or the Commonwealth of Puerto Rico) and have the equivalent of 3 years of full-time relevant experience;

(ii) Be licensed or certified by the Federal government, a State, tribe, or U.S. territory (or the Commonwealth of Puerto Rico) to perform environmental inquiries under §137.35 and have the equivalent of 3 years of full-time relevant experience;

(iii) Have a Baccalaureate or higher degree from an accredited institution of higher education in a discipline of engineering or science and the equivalent of 5 years of full-time relevant experience; or

(iv) Have the equivalent of 10 years of full-time relevant experience.

(2) An environmental professional should remain current in his or her field through participation in continuing education or other activities.

(3) The requirements for an environmental professional in this section do not preempt State professional licensing or registration requirements, such as those for a professional geologist, engineer, or site-remediation professional. Before commencing work, a person should determine the applicability of State professional licensing or registration laws to the activities to be undertaken as part of an inquiry under §137.35(b).

(4) A person who does not qualify as an environmental professional under this section may assist in the conduct of all appropriate inquiries according to this part if the person is under the supervision or responsible charge of an environmental professional meeting the requirements of this section when conducting the inquiries.

§ 137.30 Objectives and performance factors.

(a) *Objectives*. This part is intended to result in the identification of conditions indicative of the presence or likely presence of oil at the facility and the real property on which the facility is located. In order to meet the objectives of this regulation, persons specified in §137.1(a) and the environmental professional must seek to identify, through the conduct of the standards and practices in this subpart, the following types of information about the facility and the real property on which the facility is located:

(1) Current and past uses and occupancies of the facility and the real property on which the facility is located.

(2) Current and past uses of oil.

(3) Waste management and disposal activities that indicate presence or likely presence of oil.

(4) Current and past corrective actions and response activities that indicate presence or likely presence of oil.

(5) Engineering controls.

(6) Institutional controls, such as zoning restrictions, building permits, and easements.

(7) Properties adjoining or located nearby the facility and the real property on which the facility is located that have environmental conditions that could have resulted in conditions indicative of the presence or likely presence of oil at the facility and the real property on which the facility is located.

(b) *Performance factors*. In order to meet this part and to meet the objectives stated in paragraph (a) of this section, the persons specified in §137.1(a) or the environmental professional (as appropriate to the particular standard and practice) must—

(1) Gather the information that is required for each standard and practice

listed in this subpart that is publicly available, is obtainable from its source within a reasonable time and cost, and can be reviewed practicably; and

(2) Review and evaluate the thoroughness and reliability of the information gathered in complying with each standard and practice listed in this subpart taking into account information gathered in the course of complying with the other standards and practices of this part.

§ 137.33 General all appropriate inquiries requirements.

(a) All appropriate inquiries must be conducted within 1 year before the date of acquisition of the real property on which the facility is located, as evidenced by the date of receipt of the documentation transferring title to, or possession of, the real property and must include:

(1) An inquiry by an environmental professional, as provided in § 137.35.

(2) The collection of information under § 137.40 by persons specified in § 137.1(a).

(b) The following components of the all appropriate inquiries must be conducted or updated within 180 days before the date of acquisition of the real property on which the facility is located:

(1) Interviews with past and present owners, operators, and occupants. See § 137.45.

(2) Searches for recorded environmental cleanup liens. See § 137.55.

(3) Reviews of Federal, State, tribal, and local government records. See § 137.60.

(4) Visual inspections of the facility, the real property on which the facility is located, and adjoining properties. See § 137.65.

(5) The declaration by the environmental professional. See § 137.35(d).

(c) All appropriate inquiries may include the results of and information contained in an inquiry previously conducted by, or on behalf of, persons specified in § 137.1(a) who are responsible for the inquiries for the facility and the real property on which the facility is located if—

(1) The information was collected during the conduct of an all-appropriate-inquiries investigation under this part.

(2) The information was collected or updated within 1 year before the date of acquisition of the real property on which the facility is located.

(3) The following components of the inquiries were conducted or updated within 180 days before the date of acquisition of the real property on which the facility is located:

(i) Interviews with past and present owners, operators, and occupants. See § 137.45.

(ii) Searches for recorded environmental cleanup liens. See § 137.55.

(iii) Reviews of Federal, State, tribal, and local government records. See § 137.60.

(iv) Visual inspections of the facility, the real property on which the facility is located, and the adjoining properties. See § 137.65.

(v) The declaration by the environmental professional. See § 137.35(d).

(4) Previously collected information is updated by including relevant changes in the conditions of the facility and the real property on which the facility is located and specialized knowledge, as outlined in § 137.70, of the persons conducting the all appropriate inquiries for the facility and the real property on which the facility is located, including persons specified in § 137.1(a) and the environmental professional.

(d) All appropriate inquiries may include the results of an environmental professional's report under § 137.35(c) that have been prepared by or for other persons if—

(1) The reports meet the objectives and performance factors in § 137.30(a) and (b); and

(2) The person specified in § 137.1(a) reviews the information and conducts the additional inquiries under §§ 137.70, 137.75, and 137.80 and updates the inquiries requiring an update under paragraph (b) of this section.

(e) To the extent there are data gaps that affect the ability of persons specified in § 137.1(a) and environmental professionals to identify conditions indicative of the presence or likely presence of oil, the gaps must be identified in

the report under § 137.35(c)(2). In addition, the sources of information consulted to address data gaps should be identified and the significance of the gaps noted. Sampling and analysis may be conducted to develop information to address data gaps.

(f) Any conditions indicative of the presence or likely presence of oil identified as part of the all-appropriate-inquiries investigation should be noted in the report.

§ 137.35 Inquiries by an environmental professional.

(a) Inquiries by an environmental professional must be conducted either by the environmental professional or by a person under the supervision or responsible charge of an environmental professional.

(b) The inquiry of the environmental professional must include the requirements in §§ 137.45 (interviews with past and present owners), 137.50 (reviews of historical sources), 137.60 (reviews of government records), 137.65 (visual inspections), 137.80 (commonly known or reasonably ascertainable information) and 137.85 (degree of obviousness of the presence or likely presence of oil). In addition, the inquiry should take into account information provided to the environmental professional by the person specified in § 137.1(a) conducting the additional inquiries under § 137.40.

(c) The results of the inquiry by an environmental professional must be documented in a written report that, at a minimum, includes the following:

(1) An opinion as to whether the inquiry has identified conditions indicative of the presence or likely presence of oil at the facility and the real property on which the facility is located.

(2) An identification of data gaps in the information developed as part of the inquiry that affect the ability of the environmental professional to identify conditions indicative of the presence or likely presence of oil at the facility and the real property on which the facility is located. The report must also indicate whether the gaps prevented the environmental professional from reaching an opinion regarding the identification of conditions indicative of the presence or likely presence of oil.

(3) The qualifications of the environmental professional.

(4) An opinion regarding whether additional appropriate investigation is necessary.

(d) The environmental professional must place the following statements in the written document identified in paragraph (c) of this section and sign the document: ''[I, We] declare that, to the best of [my, our] professional knowledge, [I, we] meet the requirements under 33 CFR 137.25 for an environmental professional.'' and ''[I, We] have the specific qualifications based on education, training, and experience to assess the nature, history, and setting of a facility and the real property on which it is located. [I, We] have developed and conducted all appropriate inquiries according to the standards and practices in 33 CFR part 137.''

§ 137.40 Additional inquiries.

(a) Persons specified in § 137.1(a) must conduct inquiries in addition to those conducted by the environmental professional under § 137.35 and may provide the information associated with these additional inquiries to the environmental professional responsible for conducting the activities listed in § 137.35—

(1) As required by § 137.55 and if not otherwise obtained by the environmental professional, environmental cleanup liens against the facility and the real property on which it is located that are filed or recorded under Federal, State, tribal, or local law.

(2) As required by § 137.70, specialized knowledge or experience of the person specified in § 137.1(a).

(3) As required by § 137.75, the relationship of the purchase price to the fair market value of the facility and the real property on which the facility is located if the oil was not at the facility and the real property on which it is located.

(4) As required by § 137.80 and if not otherwise obtained by the environmental professional, commonly known or reasonably ascertainable information about the facility and the real property on which it is located.

(b) [Reserved]

§ 137.45 Interviews with past and present owners, operators, and occupants.

(a) Interviews with owners, operators, and occupants of the facility and the real property on which the facility is located must be conducted for the purposes of achieving the objectives and performance factors of § 137.30(a) and (b).

(b) The inquiry of the environmental professional must include interviewing the current owner and occupant of the facility and the real property on which the facility is located. If the facility and the real property on which the facility is located has multiple occupants, the inquiry of the environmental professional must include interviewing major occupants, as well as those occupants likely to use, store, treat, handle or dispose of oil or those who have likely done so in the past.

(c) The inquiry of the environmental professional also must include, to the extent necessary to achieve the objectives and performance factors in § 137.30(a) and (b), interviewing one or more of the following persons:

(1) Current and past facility and real property managers with relevant knowledge of uses and physical characteristics of the facility and the real property on which the facility is located.

(2) Past owners, occupants, or operators of the facility and the real property on which the facility is located.

(3) Employees of current and past occupants of the facility and the real property on which the facility is located.

(d) In the case of inquiries conducted at abandoned properties where there is evidence of potential unauthorized uses or evidence of uncontrolled access, the environmental professional's inquiry must include an interview of at least one owner or occupant of a neighboring property from which it appears possible that the owner or occupant of the neighboring property could have observed use or other presence or likely presence of oil.

§ 137.50 Reviews of historical sources of information.

(a) Historical documents and records must be reviewed for the purposes of achieving the objectives and performance factors of § 137.30(a) and (b). Historical documents and records may include, but are not limited to, aerial photographs, fire insurance maps, building department records, chain of title documents, and land use records.

(b) Historical documents and records reviewed must cover a period of time as far back in the history of the real property to when the first structure was built or when it was first used for residential, agricultural, commercial, industrial, or governmental purposes. The environmental professional may exercise professional judgment in context of the facts available at the time of the inquiry as to how far back in time it is necessary to search historical records.

§ 137.55 Searches for recorded environmental cleanup liens.

(a) All appropriate inquiries must include a search for the existence of environmental cleanup liens against the facility and the real property on which the facility is located that are filed or recorded under Federal, State, tribal, or local law.

(b) All information collected by persons specified in § 137.1(a) rather than an environmental professional regarding the existence of environmental cleanup liens associated with the facility and the real property on which the facility is located may be provided to the environmental professional or retained by the applicable party.

§ 137.60 Reviews of Federal, State, tribal, and local government records.

(a) Federal, State, tribal, and local government records or databases of government records of the facility, the real property on which the facility is located, and adjoining properties must be reviewed for the purposes of achieving the objectives and performance factors of § 137.30(a) and (b).

(b) With regard to the facility and the property on which the facility is located, the review of Federal, State, and tribal government records or databases of the government records and local government records and databases of the records should include—

(1) Records of reported oil discharges present, including site investigation reports for the facility and the real property on which the facility is located;

(2) Records of activities, conditions, or incidents likely to cause or contribute to discharges or substantial threat of discharges of oil, including landfill and other disposal unit location records and permits, storage tank records and permits, hazardous waste handler and generator records and permits, Federal, tribal and State government listings of sites identified as priority cleanup sites, and spill reporting records;

(3) Comprehensive Environmental Response, Compensation, and Liability Information System (CERCLIS) records;

(4) Public health records;

(5) Emergency Response Notification System records;

(6) Registries or publicly available lists of engineering controls; and

(7) Registries or publicly available lists of institutional controls, including environmental land use restrictions, applicable to the facility and the real property on which the facility is located.

(c) With regard to nearby or adjoining properties, the review of Federal, State, tribal, and local government records or databases of government records should include the identification of the following:

(1) Properties for which there are government records of reported discharges or substantial threat of discharges of oil. Such records or databases containing such records and the associated distances from the facility and the real property on which the facility is located for which such information should be searched include the following:

(i) Records of National Priorities List (NPL) sites or tribal- and State-equivalent sites (one mile).

(ii) Resource Conservation and Recovery Act (RCRA) properties subject to corrective action (one mile).

(iii) Records of Federally-registered, or State-permitted or -registered, hazardous waste sites identified for investigation or remediation, such as sites enrolled in State and tribal voluntary cleanup programs and tribal- and State-listed brownfield sites (one-half mile).

(iv) Records of leaking underground storage tanks (one-half mile).

(2) Properties that previously were identified or regulated by a government entity due to environmental concerns at the facility and the real property on which the facility is located. The records or databases containing the records and the associated distances from the facility and the real property on which the facility is located for which the information should be searched include the following:

(i) Records of delisted NPL sites (one-half mile).

(ii) Registries or publicly available lists of engineering controls (one-half mile).

(iii) Records of former CERCLIS sites with no further remedial action notices (one-half mile).

(3) Properties for which there are records of Federally-permitted, State-permitted or -registered, or tribal-permitted or -registered waste management activities. The records or databases that may contain the records include the following:

(i) Records of RCRA small quantity and large quantity generators (adjoining properties).

(ii) Records of Federally-permitted, State-permitted or -registered, or tribal-permitted landfills and solid waste management facilities (one-half mile).

(iii) Records of registered storage tanks (adjoining property).

(4) A review of additional government records with regard to sites identified under paragraphs (c)(1) through (c)(3) of this section may be necessary in the judgment of the environmental professional for the purpose of achieving the objectives and performance factors of §§ 137.30(a) and (b).

(d) The search distance from the real property boundary for reviewing government records or databases of government records listed in paragraph (c) of this section may be modified based upon the professional judgment of the environmental professional. The rationale for the modifications must be documented by the environmental professional. The environmental professional may consider one or more of the

following factors in determining an alternate appropriate search distance—

(1) The nature and extent of a discharge.

(2) Geologic, hydrogeologic, or topographic conditions of the property and surrounding environment.

(3) Land use or development densities.

(4) The property type.

(5) Existing or past uses of surrounding properties.

(6) Potential migration pathways (e.g., groundwater flow direction, prevalent wind direction).

(7) Other relevant factors.

§ 137.65 Visual inspections of the facility, the real property on which the facility is located, and adjoining properties.

(a) For the purpose of achieving the objectives and performance factors of § 137.30(a) and (b), the inquiry of the environmental professional must include the following:

(1) A visual on-site inspection of the facility and the real property on which the facility is located, and the improvements at the facility and real property, including a visual inspection of the areas where oil may be or may have been used, stored, treated, handled, or disposed. Physical limitations to the visual inspection must be noted.

(2) A visual inspection of adjoining properties, from the subject real property line, public rights-of-way, or other vantage point (e.g., aerial photography), including a visual inspection of areas where oil may be or may have been stored, treated, handled or disposed. A visual on-site inspection is recommended, though not required. Physical limitations to the inspection of adjacent properties must be noted.

(b) Except as in paragraph (c) of this section, a visual on-site inspection of the facility and the real property on which the facility is located must be conducted.

(c) An on-site inspection is not required if an on-site visual inspection of the facility and the real property on which the facility is located cannot be performed because of physical limitations, remote and inaccessible location, or other inability to obtain access to the facility and the real property on which the facility is located after good faith efforts have been taken to obtain access. The mere refusal of a voluntary seller to provide access to the facility and the real property on which the facility is located is not justification for not conducting an on-site inspection. The inquiry of the environmental professional must include—

(1) Visually inspecting the facility and the real property on which the facility is located using another method, such as aerial imagery for large properties, or visually inspecting the facility and the real property on which the facility is located from the nearest accessible vantage point, such as the property line or public road for small properties;

(2) Documenting the efforts undertaken to obtain access and an explanation of why such efforts were unsuccessful; and

(3) Documenting other sources of information regarding the presence or likely presence of oil at the facility and the real property on which the facility is located that were consulted according to § 137.30(a). The documentation should include comments, if any, by the environmental professional on the significance of the failure to conduct a visual on-site inspection of the facility and the real property on which the facility is located with regard to the ability to identify conditions indicative of the presence or likely presence of oil at the facility and the real property.

§ 137.70 Specialized knowledge or experience on the part of persons specified in § 137.1(a).

(a) For the purpose of identifying conditions indicative of the presence or likely presence of oil at the facility and the real property on which the facility is located, persons specified in § 137.1(a) must take into account their own specialized knowledge of the facility and the real property on which the facility is located, the area surrounding the facility and the real property on which the facility is located, and the conditions of adjoining properties and their experience relevant to the inquiry.

(b) The results of all appropriate inquiries under § 137.33 must take into account the relevant and applicable specialized knowledge and experience of the persons specified in § 137.1(a) responsible for undertaking the inquiry.

§ 137.75 The relationship of the purchase price to the value of the facility and the real property on which the facility is located, if oil was not at the facility or on the real property.

(a) Persons specified in § 137.1(a) must consider whether the purchase price of the facility and the real property on which the facility is located reasonably reflects the fair market value of the facility and real property if oil was not present or likely present.

(b) If the persons conclude that the purchase price does not reasonably reflect the fair market value of that facility and real property if oil was not at the facility and the real property, they must consider whether or not the differential in purchase price and fair market value is due to the presence or likely presence of oil.

§ 137.80 Commonly known or reasonably ascertainable information about the facility and the real property on which the facility is located.

(a) Throughout the inquiries, persons specified in § 137.1(a) and environmental professionals conducting the inquiry must take into account commonly known or reasonably ascertainable information within the local community about the facility and the real property on which the facility is located and consider that information when seeking to identify conditions indicative of the presence or likely presence of oil at the facility and the real property.

(b) Commonly known information may include information obtained by the person specified in § 137.1(a) or by the environmental professional about the presence or likely presence of oil at the facility and the real property on which the facility is located that is incidental to the information obtained during the inquiry of the environmental professional.

(c) To the extent necessary to achieve the objectives and performance factors of § 137.30(a) and (b), the person specified in § 137.1(a) and the environmental professional must gather information from varied sources whose input either individually or taken together may provide commonly known or reasonably ascertainable information about the facility and the real property on which the facility is located; the environmental professional may refer to one or more of the following sources of information:

(1) Current owners or occupants of neighboring properties or properties adjacent to the facility and the real property on which the facility is located.

(2) Local and state government officials who may have knowledge of, or information related to, the facility and the real property on which the facility is located.

(3) Others with knowledge of the facility and the real property on which the facility is located.

(4) Other sources of information, such as newspapers, Web sites, community organizations, local libraries, and historical societies.

§ 137.85 The degree of obviousness of the presence or likely presence of oil at the facility and the real property on which the facility is located and the ability to detect the oil by appropriate investigation.

(a) Persons specified in § 137.1(a) and environmental professionals conducting an inquiry of a facility and the real property on which it is located on their behalf must take into account the information collected under §§ 137.45 through 137.80 in considering the degree of obviousness of the presence or likely presence of oil at the facility and the real property on which the facility is located.

(b) Persons specified in § 137.1(a) and environmental professionals conducting an inquiry of a facility and the property on which the facility is located on their behalf must take into account the information collected under §§ 137.45 through 137.80 in considering the ability to detect the presence or likely presence of oil by appropriate investigation. The report of the environmental professional should include an opinion under § 137.35(c)(4) regarding whether additional appropriate investigation is necessary.

PART 138—FINANCIAL RESPONSIBILITY FOR WATER POLLUTION (VESSELS) AND OPA 90 LIMITS OF LIABILITY (VESSELS AND DEEPWATER PORTS)

Subpart A—Financial Responsibility for Water Pollution (Vessels)

Sec.
138.10 Scope.
138.15 Applicability.
138.20 Definitions.
138.30 General.
138.40 Forms.
138.45 Where to apply for and renew Certificates.
138.50 Time to apply.
138.60 Applications, general instructions.
138.65 Issuance of Certificates.
138.70 Renewal of Certificates.
138.80 Financial responsibility, how established.
138.85 Implementation schedule for amendments to applicable amounts by regulation.
138.90 Individual and Fleet Certificates.
138.100 Non-owning operator's responsibility for identification.
138.110 Master Certificates.
138.120 Certificates, denial or revocation.
138.130 Fees.
138.140 Enforcement.
138.150 Service of process.

Subpart B—OPA 90 Limits of Liability (Vessels and Deepwater Ports)

138.200 Scope.
138.210 Applicability.
138.220 Definitions.
138.230 Limits of liability.
138.240 Procedure for calculating limit of liability adjustments for inflation.

AUTHORITY: 33 U.S.C. 2704; 33 U.S.C. 2716, 2716a; 42 U.S.C. 9608, 9609; Sec. 1512 of the Homeland Security Act of 2002, Public Law 107–296, Title XV, Nov. 25, 2002, 116 Stat. 2310 (6 U.S.C. 552(d)); E.O. 12580, Sec. 7(b), 3 CFR, 1987 Comp., p. 198; E.O. 12777, Sec. 5, 3 CFR, 1991 Comp., p. 351, as amended by E.O. 13286, 68 FR 10619, 3 CFR, 2004 Comp., p.166; Department of Homeland Security Delegation Nos. 0170.1 and 5110. Section 138.30 also issued under the authority of 46 U.S.C. 2103 and 14302.

SOURCE: USCG–2005–21780, 73 FR 53697, Sept. 17, 2008, unless otherwise noted.

Subpart A—Financial Responsibility for Water Pollution (Vessels)

§ 138.10 Scope.

This subpart sets forth the procedures by which an operator of a vessel must establish and maintain, for itself and for the owners and demise charterers of the vessel, evidence of financial responsibility required by Section 1016(a) of the Oil Pollution Act of 1990, as amended (OPA 90) (33 U.S.C. 2716), and Section 108 of the Comprehensive Environmental Response, Compensation, and Liability Act of 1980, as amended (CERCLA) (42 U.S.C. 9608), equal to the total applicable amount determined under this subpart and sufficient to cover their liability arising under—

(a) Sections 1002 and 1004 of OPA 90 (33 U.S.C. 2702, 2704); and

(b) Section 107 of CERCLA (42 U.S.C. 9607).

§ 138.15 Applicability.

(a) This subpart applies to the operator as defined herein of —

(1) A tank vessel of any size, and a foreign-flag vessel of any size, using the waters of the exclusive economic zone to transship or lighter oil (whether delivering or receiving) destined for a place subject to the jurisdiction of the United States; and

(2) Any vessel using the navigable waters of the United States or any port or other place subject to the jurisdiction of the United States, including a vessel using an offshore facility subject to the jurisdiction of the United States, except—

(i) A vessel that is 300 gross tons or less; or

(ii) A non-self-propelled barge that does not carry oil as cargo or fuel and does not carry hazardous substances as cargo.

(b) For the purposes of financial responsibility under OPA 90, a mobile offshore drilling unit is treated as a tank vessel when it is being used as an offshore facility and there is a discharge, or a substantial threat of a discharge, of oil on or above the surface of the water. A mobile offshore drilling unit is treated as a vessel other than a tank

vessel when it is not being used as an offshore facility.

(c) In addition to a non-self-propelled barge over 300 gross tons that carries hazardous substances as cargo, for the purposes of financial responsibility under CERCLA, this subpart applies to a self-propelled vessel over 300 gross tons, even if it does not carry hazardous substances.

(d) This subpart does not apply to operators of public vessels.

§ 138.20 Definitions.

(a) As used in this subpart, the following terms have the meaning as set forth in—

(1) Section 1001 of the Oil Pollution Act of 1990 (33 U.S.C. 2701), respecting the financial responsibility referred to in § 138.10(a): *claim*, *claimant*, *damages*, *discharge*, *exclusive economic zone*, *liable*, *liability*, *navigable waters*, *mobile offshore drilling unit*, *natural resources*, *offshore facility*, *oil*, *owner or operator*, *person*, *remove*, *removal*, *removal costs*, *security interest*, and *United States;* and

(2) Section 101 of the Comprehensive Environmental Response, Compensation, and Liability Act (42 U.S.C. 9601), respecting the financial responsibility referred to in § 138.10(b): *claim*, *claimant*, *damages*, *environment*, *hazardous substance*, *liable*, *liability*, *navigable waters*, *natural resources*, *offshore facility*, *owner or operator*, *person*, *release*, *remove*, *removal*, *security interest*, and *United States*.

(b) As used in this subpart —

Acts means OPA 90 and CERCLA.

Applicable amount means an amount of financial responsibility that must be demonstrated under this subpart, determined under § 138.80(f)(1) for OPA 90 or § 138.80(f)(2) for CERCLA.

Applicant means an operator who has applied for a Certificate or for the renewal of a Certificate under this subpart.

Application means an Application for Vessel Certificate of Financial Responsibility (Water Pollution) (Form CG–5585), which can be obtained from the U.S. Coast Guard, National Pollution Funds Center as provided in §§ 138.40 and 138.45.

Cargo means goods or materials on board a vessel for purposes of transportation, whether proprietary or non-proprietary. A hazardous substance or oil carried solely for use aboard the carrying vessel is not Cargo.

CERCLA means title I of the Comprehensive Environmental Response, Compensation, and Liability Act of 1980, as amended (42 U.S.C. 9601–9675).

Certificant means an operator who has a current Certificate issued by the U.S. Coast Guard, National Pollution Funds Center (NPFC) under this subpart.

Certificate means a Vessel Certificate of Financial Responsibility (Water Pollution) (Form CG–5585) issued by the NPFC under this subpart, as provided in § 138.65.

Day or *days* means calendar days. If a deadline specified in this subpart falls on a weekend or Federal holiday, the deadline will occur on the next working day. Compliance with a submission deadline will be determined based on the day the submission is received by NPFC.

Director, *NPFC* means the head of the NPFC.

E–COFR means the Electronic Certificate of Financial Responsibility web-based process located on the NPFC Web site (*https://npfc.uscg.mil/cofr/default.aspx*), which may be used by operators to apply for and renew Certificates.

Financial guarantor means a guarantor who provides a financial guaranty under § 138.80(b)(4), and is distinct from an insurer, a self-insurer or a surety.

Financial responsibility means the statutorily required financial ability to meet a responsible party's liability under the Acts.

Fish tender vessel and *fishing vessel* have the same meaning as set forth in 46 U.S.C. 2101.

Fuel means any oil or hazardous substance used or capable of being used to produce heat or power by burning, including power to operate equipment. A hand-carried pump with not more than five gallons of fuel capacity, that is neither integral to nor regularly stored aboard a non-self-propelled barge, is not equipment.

Guarantor means any person, other than a responsible party, who provides evidence of financial responsibility under the Acts on behalf of a vessel's

responsible parties. A responsible party who can qualify as a self-insurer under § 138.80(b)(3) may act as both a self-insurer of vessels owned, operated or demise chartered by the responsible party, and as a financial guarantor for the responsible parties of other vessels under § 138.80(b)(4).

Hazardous material means a liquid material or substance that is—

(1) Flammable or combustible;

(2) A hazardous substance designated under Section 311(b) of the Federal Water Pollution Control Act (33 U.S.C. 1321(b)); or

(3) Designated a hazardous material under the Hazardous Materials Transportation Act, Section 104 (46 U.S.C. 5103(a)) (1994).

Incident means any occurrence or series of occurrences having the same origin, involving one or more vessels, facilities, or any combination thereof, resulting in the discharge or substantial threat of discharge of oil into or upon the navigable waters or adjoining shorelines or the exclusive economic zone.

Insurer is a type of guarantor and means one or more insurance companies, associations of underwriters, ship owners' protection and indemnity associations, or other persons, each of which must be acceptable to the Director, NPFC.

Master Certificate means a Certificate issued under this subpart to a person who is a builder, repairer, scrapper, lessor, or seller of a vessel and is acting as the vessel's operator.

Offshore supply vessel has the same meaning as set forth in 46 U.S.C. 2101.

OPA 90 means the Oil Pollution Act of 1990 (33 U.S.C. 2701, *et seq.*).

Operator means a person who is an owner, a demise charterer, or other contractor, who conducts the operation of, or who is responsible for the operation of, a vessel. A builder, repairer, scrapper, lessor, or seller who is responsible, or who agrees by contract to become responsible, for a vessel is an operator. A time or voyage charterer that does not assume responsibility for the operation of a vessel is not an operator for the purposes of this subpart.

Owner means any person holding legal or equitable title to a vessel. In a case where a U.S. Coast Guard Certificate of Documentation or equivalent document has been issued, the owner is considered to be the person or persons whose name or names appear thereon as owner. Owner does not include a person who, without participating in the management of a vessel, holds indicia of ownership primarily to protect the owner's security interest in the vessel.

Public vessel means a vessel owned or bareboat chartered by the United States, or by a State or political subdivision thereof, or by a foreign nation, except when the vessel is engaged in commerce.

Responsible party, for purposes of OPA 90 financial responsibility has the same meaning as defined at 33 U.S.C. 2701(32), and for purposes of CERCLA financial responsibility means any person who is an owner or operator, as defined at 42 U.S.C. 9601(20), including any person chartering a vessel by demise.

Self-elevating lift vessel means a vessel with movable legs capable of raising its hull above the surface of the sea and that is an offshore work boat (such as a work barge) that does not engage in drilling operations.

Tank vessel means a vessel (other than an offshore supply vessel, a fishing vessel or a fish tender vessel of 750 gross tons or less that transfers fuel without charge to a fishing vessel owned by the same person, or a towing or pushing vessel (tug) simply because it has in its custody a tank barge) that is constructed or adapted to carry, or that carries, oil or liquid hazardous material in bulk as cargo or cargo residue, and that—

(1) Is a vessel of the United States;

(2) Operates on the navigable waters; or

(3) Transfers oil or hazardous material in a place subject to the jurisdiction of the United States.

Total applicable amount means the amount determined under § 138.80(f)(3).

Vessel means every description of watercraft or other artificial contrivance used, or capable of being used, as a means of transportation on water.

[USCG–2005–21780, 73 FR 53697, Sept. 17, 2008, as amended by USCG–2012–0306, 77 FR 37315, June 21, 2012]

§ 138.30 General.

(a) The regulations in this subpart set forth the procedures for an operator of a vessel subject to this subpart to demonstrate that the responsible parties of the vessel are financially able to meet their potential liability for costs and damages in the applicable amounts set forth in this subpart at § 138.80(f). Although the owners, operators, and demise charterers of a vessel are strictly, jointly and severally liable under OPA 90 and CERCLA for the costs and damages resulting from each incident or release or threatened release, together they need only establish and maintain evidence of financial responsibility under this subpart equal to the combined OPA 90 and CERCLA limits of liability arising from a single incident and a single release, or threatened release. Only that portion of the total applicable amount of financial responsibility demonstrated under this subpart with respect to—

(1) OPA 90 is required to be made available by a vessel's responsible parties and guarantors for the costs and damages related to an incident where there is not also a release or threatened release; and

(2) CERCLA is required to be made available by a vessel's responsible parties and guarantors for the costs and damages related to a release or threatened release where there is not also an incident. A guarantor (or a self-insurer for whom the exceptions to limitations of liability are not applicable), therefore, is not required to apply the entire total applicable amount of financial responsibility demonstrated under this subpart to an incident involving oil alone or a release or threatened release involving a hazardous substance alone.

(b) Where a vessel is operated by its owner or demise charterer, or the owner or demise charterer is responsible for its operation, the owner or demise charterer is considered to be the operator for purposes of this subpart, and must submit the Application and requests for renewal for a Certificate. In all other cases, the vessel operator must submit the Application or requests for renewal.

(c) For a United States-flag vessel, the applicable gross tons or gross tonnage, as referred to in this part, is determined as follows:

(1) For a documented U.S. vessel measured under both 46 U.S.C. Chapters 143 (Convention Measurement) and 145 (Regulatory Measurement). The vessel's regulatory gross tonnage is used to determine whether the vessel exceeds 300 gross tons where that threshold applies under the Acts. If the vessel's regulatory gross tonnage is determined under the Dual Measurement System in 46 CFR part 69, subpart D, the higher gross tonnage is the regulatory gross tonnage for the purposes of determining whether the vessel meets the 300 gross ton threshold. The vessel's gross tonnage as measured under the International Convention on Tonnage Measurement of Ships, 1969 (Convention), is used to determine the vessel's required applicable amounts of financial responsibility, and limit of liability under Section 1004 of OPA 90 (33 U.S.C. 2704), including subpart B of this part, and Section 107 of CERCLA (42 U.S.C. 9607).

(2) For all other United States vessels. The vessel's gross tonnage under 46 CFR part 69 is used for determining the vessel's 300 gross ton threshold, the required applicable amounts of financial responsibility, and limits of liability under Section 1004 of OPA 90 (33 U.S.C. 2704), including subpart B of this part, and Section 107 of CERCLA (42 U.S.C. 9607). If the vessel's gross tonnage is determined under the Dual Measurement System, the higher gross tonnage is used in all determinations.

(d) For a vessel of a foreign country that is a party to the Convention, gross tons or gross tonnage, as referred to in this part, is determined as follows:

(1) For a vessel assigned, or presently required to be assigned, gross tonnage under Annex I of the Convention. The vessel's gross tonnage as measured under Annex I of the Convention is used for determining the 300 gross ton threshold, if applicable, the required applicable amounts of financial responsibility, and limits of liability under Section 1004(a) of OPA 90 (33 U.S.C. 2704), including subpart B of this part, and under Section 107 of CERCLA (42 U.S.C. 9607).

(2) For a vessel not presently required to be assigned gross tonnage

under Annex I of the Convention. The highest gross tonnage that appears on the vessel's U.S. Coast Guard Certificate of Documentation or equivalent document and that is acceptable to the Coast Guard under 46 U.S.C. chapter 143 is used for determining the 300 gross ton threshold, if applicable, the required applicable amounts of financial responsibility, and limits of liability under Section 1004 of OPA 90 (33 U.S.C. 2704), including subpart B of this part, and Section 107 of CERCLA (42 U.S.C. 9607). If the vessel has no document, or the gross tonnage appearing on the document is not acceptable under 46 U.S.C. chapter 143, the vessel's gross tonnage is determined by applying the Convention Measurement System under 46 CFR part 69, subpart B, or if applicable, the Simplified Measurement System under 46 CFR part 69, subpart E. The measurement standards applied are subject to applicable international agreements to which the United States Government is a party.

(e) For a vessel of a foreign country that is not a party to the Convention, gross tons or gross tonnage, as referred to in this part, is determined as follows:

(1) For a vessel measured under laws and regulations found by the Commandant to be similar to Annex I of the Convention. The vessel's gross tonnage under the similar laws and regulations is used for determining the 300 gross ton threshold, if applicable, the required applicable amounts of financial responsibility, and limits of liability under Section 1004 of OPA 90 (33 U.S.C. 2704), including subpart B of this part, and Section 107 of CERCLA (42 U.S.C. 9607). The measurement standards applied are subject to applicable international agreements to which the United States Government is a party.

(2) For a vessel not measured under laws and regulations found by the Commandant to be similar to Annex I of the Convention. The vessel's gross tonnage under 46 CFR part 69, subpart B, or, if applicable, subpart E, is used for determining the 300 gross ton threshold, if applicable, the required applicable amount of financial responsibility, and the limits of liability under Section 1004 of OPA 90 (33 U.S.C. 2704), including subpart B of this part, and Section 107 of CERCLA (42 U.S.C. 9607). The measurement standards applied are subject to applicable international agreements to which the United States is a party.

(f) A person who agrees to act as a guarantor or a self-insurer is bound by the vessel's gross tonnage as determined under paragraphs (c), (d), or (e) of this section, regardless of what gross tonnage is specified in an Application or guaranty form submitted under this subpart. Guarantors, however, may limit their liability under a guaranty of financial responsibility to the applicable gross tonnage appearing on a vessel's International Tonnage Certificate or other official, applicable certificate of measurement and will not incur any greater liability with respect to that guaranty, except when the guarantors knew or should have known that the applicable tonnage certificate was incorrect.

§ 138.40 Forms.

All forms referred to in this subpart may be obtained from NPFC by requesting them in writing at the address given in § 138.45(a) or by clicking on the Forms link at the NPFC E–COFR Web site, *https://npfc.uscg.mil/cofr/default.aspx*.

[USCG–2005–21780, 73 FR 53697, Sept. 17, 2008, as amended by USCG–2012–0306, 77 FR 37315, June 21, 2012]

§ 138.45 Where to apply for and renew Certificates.

(a) An operator must submit all Applications for a Certificate and all requests for renewal of a Certificate, together with all evidence of financial responsibility required under § 138.80 and all fees required under § 138.130, to the NFPC at the following address: Director National Pollution Funds Center, NPFC CV MS 7100, U.S. Coast Guard, 4200 Wilson Blvd., Suite 1000, Arlington, VA 20598–7100, telephone 202–872–6130, fax 703–872–6123; or electronically using NPFC's E–COFR Web-based process at *https://npfc.uscg.mil/cofr/default.aspx*

(b) All requests you have for assistance in completing Applications, requests for renewal and other submissions under this subpart, including telephone inquiries, should be directed

to the U.S. Coast Guard NPFC at the addresses in paragraph (a) of this section.

[USCG–2005–21780, 73 FR 53697, Sept. 17, 2008, as amended by USCG–2009–0416, 74 FR 27441, June 10, 2009; USCG–2012–0306, 77 FR 37315, June 21, 2012; USCG–2013–0397, 78 FR 39175, July 1, 2013]

§ 138.50 Time to apply.

(a) A vessel operator who wishes to obtain a Certificate must submit a completed Application form and all required supporting evidence of financial responsibility, and must pay all applicable fees, at least 21 days prior to the date the Certificate is required. The Director, NPFC, may grant an extension of this 21-day deadline upon written request and for good cause shown. An applicant seeking an extension of this deadline must set forth the reasons for the extension request and deliver the request to the Director, NPFC, at least 15 days before the deadline. The Director, NPFC, will not consider a request for an extension of more than 60 days.

(b) The Director, NPFC, generally processes Applications and requests for renewal in the order in which they are received at the NPFC.

§ 138.60 Applications, general instructions.

(a) You may obtain an Application for Vessel Certificate of Financial Responsibility (Water Pollution) (Form CG–5585) by following the instructions in §§ 138.40 and 138.45.

(b) Your Application and all supporting documents must be in English, and express all monetary terms in United States dollars.

(c) An authorized official of the applicant must sign the signature page of the Application. The title of the signer must be shown in the space provided on the Application. The operator must submit the original signature page of the Application to NPFC in hard copy.

(d) If the signer is not identified on the Application as an individual (sole proprietor) applicant, a partner in a partnership applicant, or a director, chief executive officer, or any other duly authorized officer of a corporate applicant, the Application must be accompanied by a written statement certifying the signer's authority to sign on behalf of the applicant.

(e) If, before the issuance of a Certificate, the applicant becomes aware of a change in any of the facts contained in the Application or supporting documentation, the applicant must, within 5 business days of becoming aware of the change, notify the Director, NPFC, in writing, of the changed facts.

§ 138.65 Issuance of Certificates.

Upon the satisfactory demonstration of financial responsibility and payment of all fees due, the Director, NPFC, will issue a Vessel Certificate of Financial Responsibility (Water Pollution) (Form CG–5585) in electronic form. Copies of the Certificate may be downloaded from NPFC's E–COFR Web site.

§ 138.70 Renewal of Certificates.

(a) The operator of a vessel required to have a Certificate under this subpart must submit a written or E–COFR request for renewal of the Certificate to the NPFC at least 21 days, but not earlier than 90 days, before the expiration date of the Certificate. A letter may be used for this purpose. The request for renewal must comply in all other respects with the requirements in § 138.60 concerning Applications. The Director, NPFC, may waive this 21-day requirement for good cause shown.

(b) The operator must identify in the request for renewal any changes which have occurred since the original Application for a Certificate was filed, and must set forth the correct information in full.

§ 138.80 Financial responsibility, how established.

(a) *General.* In addition to submitting an Application, requests for renewal, and fees, an applicant must file, or cause to be filed, with the Director, NPFC, evidence of financial responsibility acceptable to the Director, NPFC, in an amount equal to the total applicable amount determined under § 138.80(f)(3). A guarantor may file the evidence of financial responsibility on behalf of the applicant directly with the Director, NPFC.

(b) *Methods*. An applicant or certificant must establish and maintain evidence of financial responsibility by one or more of the following methods:

(1) *Insurance*. By filing with the Director, NPFC, an Insurance Guaranty (Form CG–5586) or, when applying for a Master Certificate under §138.110, a Master Insurance Guaranty (Form CG–5586–1), executed by not more than four insurers that have been found acceptable by, and remain acceptable to, the Director, NPFC, for purposes of this subpart.

(2) *Surety bond*. By filing with the Director, NPFC, a Surety Bond Guaranty (Form CG–5586–2), executed by not more than 10 acceptable surety companies certified by the United States Department of the Treasury with respect to the issuance of Federal bonds in the maximum penal sum of each bond to be issued under this subpart.

(3) *Self-insurance*. By filing with the Director, NPFC, the financial statements specified in paragraph (b)(3)(i) of this section for the applicant's fiscal year preceding the date of Application and by demonstrating that the applicant or certificant maintains, in the United States, working capital and net worth each in amounts equal to or greater than the total applicable amount determined under §138.80(f)(3), based on a vessel carrying hazardous substances as cargo. As used in this paragraph, working capital means the amount of current assets located in the United States, less all current liabilities anywhere in the world; and net worth means the amount of all assets located in the United States, less all liabilities anywhere in the world. For each fiscal year after the initial filing, the applicant or certificant must also submit statements as follows:

(i) *Initial and annual filings*. An applicant or certificant must submit annual, current, and audited non-consolidated financial statements prepared in accordance with Generally Accepted Accounting Principles, and audited by an independent Certified Public Accountant in accordance with Generally Accepted Auditing Standards. These financial statements must be accompanied by an additional statement from the Treasurer (or equivalent official) of the applicant or certificant certifying both the amount of current assets and the amount of total assets included in the accompanying balance sheet, which are located in the United States. If the financial statements cannot be submitted in non-consolidated form, a consolidated statement may be submitted if accompanied by an additional statement prepared by the same Certified Public Accountant, verifying the amount by which the applicant's or certificant's—

(A) Total assets located in the United States exceed its total (*i.e.*, worldwide) liabilities; and

(B) Current assets located in the United States exceed its total (*i.e.*, worldwide) current liabilities. This additional Certified Public Accountant statement must specifically name the applicant or certificant, indicate that the amounts so verified relate only to the applicant or certificant, apart from any other affiliated entity, and identify the consolidated financial statement to which it applies.

(ii) *Semiannual self-insurance submissions*. When the self-insuring applicant's or certificant's demonstrated net worth is not at least ten times the total applicable amount of financial responsibility determined under §138.80(f)(3), the applicant's or certificant's Treasurer (or equivalent official) must file affidavits with the Director, NPFC, covering the first six months of the applicant's or certificant's current fiscal year. The affidavits must state that neither the working capital nor the net worth have, during the first six months of the current fiscal year, fallen below the applicant's or certificant's required total applicable amount of financial responsibility as determined under this subpart.

(iii) *Additional self-insurance submissions*. A self-insuring applicant or certificant—

(A) Must, upon request of the Director, NPFC, within the time specified in the request, file additional financial information; and

(B) Must notify the Director, NPFC, within 5 business days of the date the applicant or certificant knows, or has reason to know, that its working capital or net worth has fallen below the

total applicable amounts required by this subpart.

(iv) *Time for self-insurance filings.* All required annual financial statements must be received by the Director, NPFC, within 90 days after the close of the applicant's or certificant's fiscal year, and all affidavits required by paragraph (b)(3)(ii) of this section must be received by the Director, NPFC, within 30 days after the close of the applicable six-month period. The Director, NPFC, may grant an extension of the time limits for filing the annual financial statements, semi-annual affidavits or additional financial information upon written request and for good cause shown. An applicant or certificant seeking an extension of any deadline must set forth the reasons for the extension request and deliver the request to the Director, NPFC, at least 15 days before the annual financial statements, affidavits or additional information are due. The Director, NPFC, will not consider a request for an extension of more than 60 days.

(v) *Failure to submit.* The Director, NPFC, may deny or revoke a Certificate for failure of the applicant or certificant to timely file any statement, data, notification, or affidavit required by paragraph (b)(3) of this section.

(vi) *Waiver of working capital.* The Director, NPFC, may waive the working capital requirement for any applicant or certificant that—

(A) Is a regulated public utility, a municipal or higher-level governmental entity, or an entity operating solely as a charitable, non-profit organization qualifying under Section 501(c) Internal Revenue Code. The applicant or certificant must demonstrate in writing that the grant of a waiver would benefit a local public interest; or

(B) Demonstrates in writing that working capital is not a significant factor in the applicant's or certificant's financial condition. An applicant's or certificant's net worth in relation to the amount of its required total applicable amount of financial responsibility and a history of stable operations are the major elements considered by the Director, NPFC.

(4) *Financial guaranty.* By filing with the Director, NPFC, a Financial Guaranty (Form CG–5586–3), or, when applying for a Master Certificate, a Master Financial Guaranty (Form CG–5586–4), executed by not more than four financial guarantors, including, but not limited to, a parent or affiliate acceptable to the Director, NPFC. A financial guarantor must comply with all of the self-insurance provisions of paragraph (b)(3) of this section. In addition, a person who is a financial guarantor for more than one applicant or certificant must have working capital and net worth no less than the aggregate total applicable amounts of financial responsibility determined under § 138.80(f)(3) provided as a financial guarantor for each applicant or certificant, plus the total applicable amount required to be demonstrated by a self-insurer under this subpart if the financial guarantor is also acting as a self-insurer.

(5) *Other evidence of financial responsibility.* The Director, NPFC, will not accept a self-insurance method other than the one described in paragraph (b)(3) of this section. An applicant may in writing request that the Director, NPFC, accept a method different from one described in paragraph (b)(1), (2), or (4) of this section to demonstrate evidence of financial responsibility. An applicant submitting a request under this paragraph must submit the request to the Director, NPFC, at least 45 days prior to the date the Certificate is required. The applicant must describe in detail the method proposed, the reasons why the applicant does not wish to use or is unable to use one of the methods described in paragraph (b)(1), (2), or (4) of this section, and how the proposed method assures that the responsible parties for the vessel are able to fulfill their obligations to pay costs and damages in the event of an incident or a release or threatened release. The Director, NPFC, will not accept a method under this paragraph that merely deletes or alters a provision of one of the methods described in paragraph (b)(1), (2), or (4) of this section (for example, one that alters the termination clause of the Insurance Guaranty (Form CG–5586). An applicant that makes a request under this paragraph must provide the Director, NPFC, a

proposed guaranty form that includes all the elements described in paragraphs (c) and (d) of this section. A decision of the Director, NPFC, not to accept a method requested by an applicant under this paragraph is final agency action.

(c) *Forms*—(1) *Multiple guarantors.* Four or fewer insurers (a lead underwriter is considered to be one insurer) may jointly execute an Insurance Guaranty (Form CG–5586) or a Master Insurance Guaranty (Form CG–5586–1). Ten or fewer sureties (including lead sureties) may jointly execute a Surety Bond Guaranty (Form CG–5586–2). Four or fewer financial guarantors may jointly execute a Financial Guaranty (Form CG–5586–3). If more than one insurer, surety, or financial guarantor executes the relevant form—

(i) Each is bound for the payment of sums only in accordance with the percentage of vertical participation specified on the relevant form for that insurer, surety, or financial guarantor. Participation in the form of layering (tiers, one in excess of another) is not acceptable; only vertical participation on a percentage basis and participation with no specified percentage allocation is acceptable. If no percentage of participation is specified for an insurer, surety, or financial guarantor, the liability of that insurer, surety, or financial guarantor is joint and several for the total of the unspecified portions; and

(ii) The guarantors must designate a lead guarantor having authority to bind all guarantors for actions required of guarantors under the Acts, including but not limited to receipt of designation of source, advertisement of a designation, and receipt and settlement of claims.

(2) *Operator name.* An applicant or certificant must ensure that each form submitted under this subpart sets forth in full the correct legal name of the vessel operator to whom a Certificate is to be issued.

(d) *Direct action*—(1) *Acknowledgment.* Any evidence of financial responsibility filed with the Director, NPFC, under this subpart must contain an acknowledgment by each insurer or other guarantor that an action in court by a claimant (including a claimant by right of subrogation) for costs or damages arising under the provisions of the Acts, may be brought directly against the insurer or other guarantor. The evidence of financial responsibility must also provide that, in the event an action is brought under the Acts directly against the insurer or other guarantor, the insurer or other guarantor may invoke only the following rights and defenses:

(i) The incident, release, or threatened release was caused by the willful misconduct of the person for whom the guaranty is provided.

(ii) Any defense that the person for whom the guaranty is provided may raise under the Acts.

(iii) A defense that the amount of a claim or claims, filed in any action in any court or other proceeding, exceeds the amount of the guaranty with respect to an incident or with respect to a release or threatened release.

(iv) A defense that the amount of a claim or claims that exceeds the amount of the guaranty, which amount is based on the gross tonnage of the vessel as entered on the vessel's International Tonnage Certificate or other official, applicable certificate of measurement, except when the guarantor knew or should have known that the applicable tonnage certificate was incorrect.

(v) The claim is not one made under either of the Acts.

(2) *Limitation on guarantor liability.* A guarantor that participates in any evidence of financial responsibility under this subpart will be liable because of that participation, with respect to an incident or a release or threatened release, in any proceeding only for the amount and type of costs and damages specified in the evidence of financial responsibility. A guarantor will not be considered to have consented to direct action under any law other than the Acts, or to unlimited liability under any law or in any venue, solely because of the guarantor's participation in providing any evidence of financial responsibility under this subpart. In the event of any finding that liability of a guarantor exceeds the amount of the guaranty provided under this subpart, that guaranty is considered null and void with respect to that excess.

(e) *Public access to data.* Financial data filed with the Director, NPFC, by an applicant, certificant, and any other person is considered public information to the extent required by the Freedom of Information Act (5 U.S.C. 552) and permitted by the Privacy Act (5 U.S.C. 552a).

(f) *Total applicable amount.* The total applicable amount is determined as follows:

(1) The applicable amount under OPA 90 is equal to the applicable vessel limit of liability, which is determined as provided in subpart B of this part.

(2) The applicable amount under CERCLA is determined as follows:

(i) For a vessel over 300 gross tons carrying a hazardous substance as cargo, the greater of $5,000,000 or $300 per gross ton.

(ii) For any other vessel over 300 gross tons, the greater of $500,000 or $300 per gross ton.

(3) The total applicable amount is the applicable amount determined under paragraph (f)(1) of this section plus the applicable amount determined under paragraph (f)(2) of this section.

§ 138.85 Implementation schedule for amendments to applicable amounts by regulation.

Each operator of a vessel described in § 138.15 must establish evidence of financial responsibility acceptable to the Director, NPFC, in an amount equal to or greater than the total applicable amounts determined under § 138.80(f), by not later than January 15, 2009. In the event an applicable amount determined under § 138.80(f) is thereafter amended by regulation, each operator of a vessel described in § 138.15 must establish evidence of financial responsibility acceptable to the Director, NPFC, in an amount equal to or greater than the amended total applicable amount, by not later than 90 days after the effective date of the final rule, unless another date is required by statute or specified in the amending regulation.

§ 138.90 Individual and Fleet Certificates.

(a) The Director, NPFC, issues an individual Certificate for each vessel listed on a completed Application or request for renewal when the Director, NPFC, determines that acceptable evidence of financial responsibility has been provided and appropriate fees have been paid, except where a Fleet Certificate is issued under this section or where a Master Certificate is issued under § 138.110. Each Certificate of any type issued under this subpart is issued only in the name of a vessel operator and is effective for not more than 3 years from the date of issuance, as indicated on each Certificate. An authorized official of the applicant may submit to the Director, NPFC, a letter requesting that additional vessels be added to a previously submitted Application for an individual Certificate. The letter must set forth all information required in item 5 of the Application form. The authorized official must also file, or cause to be filed with the Director, NPFC, acceptable evidence of financial responsibility, if required, and must pay all applicable certification fees for the additional vessels.

(b) An operator of a fleet of two or more barges that are not tank vessels and that from time to time may be subject to this subpart (e.g., a hopper barge over 300 gross tons when carrying oily metal shavings or similar cargo) may apply to the Director, NPFC, for issuance of a Fleet Certificate, so long as the operator of such a fleet is a self-insurer or arranges with an acceptable guarantor to cover, automatically, all such barges for which the operator may from time to time be responsible.

(c) A person must not make any alteration on any copy of a Certificate issued under this subpart.

(d) If, at any time after a Certificate has been issued, a certificant becomes aware of a change in any of the facts contained in the Application or supporting documentation, the certificant must notify the Director, NPFC, in writing within 10 days of becoming aware of the change. A vessel or operator name change or change of a guarantor must be reported by the operator as soon as possible by telefax or other electronic means to the Director, NPFC, and followed by a written notice sent within 3 business days. (See, § 138.45, Where to apply for and renew Certificates, for contact information).

(e) Except as provided in § 138.90(f), at the moment a certificant ceases to be the operator of a vessel for any reason, including a vessel that is scrapped or transferred to a new operator, the individual Certificate naming the vessel is void and its further use is prohibited. In that case, the certificant must, within 10 business days of the Certificate becoming void, submit the following information in writing to the Director, NPFC:

(1) The number of the individual Certificate and the name of the vessel.

(2) The date and reason why the certificant ceased to be the operator of the vessel.

(3) The location of the vessel on the date the certificant ceased to be the operator.

(4) The name and mailing address of the person to whom the vessel was sold or transferred.

(f) In the event of the temporary transfer of custody of an unmanned barge with a Certificate under this subpart, where the certificant transferring the barge continues to be liable under the Acts and continues to maintain on file with the Director, NPFC, acceptable evidence of financial responsibility with respect to the barge, the existing Certificate remains in effect in respect to that vessel, and a temporary new Certificate is not required for the vessel. The temporary transferee is encouraged to require the transferring certificant to acknowledge in writing that the transferring certificant agrees to remain responsible for pollution liabilities.

§ 138.100 Non-owning operator's responsibility for identification.

(a) Each operator that is not an owner of a vessel with a Certificate under this subpart, other than an unmanned barge, must ensure that the original or a legible copy of the demise charter-party (or other written document on the owner's letterhead, signed by the vessel owner, which specifically identifies the vessel operator named on the Certificate) is maintained on board the vessel.

(b) The demise charter-party or other document required by paragraph (a) of this section must be presented, upon request, for examination and copying, to a United States Government official.

§ 138.110 Master Certificates.

(a) A contractor or other person who is responsible for a vessel in the capacity of a builder, scrapper, lessor, or seller (including a repairer who agrees to be responsible for a vessel under its custody) may apply for a Master Certificate instead of applying for an individual Certificate or Fleet Certificate for each vessel. A Master Certificate covers all of the vessels subject to this subpart held by the applicant solely for purposes of construction, repair, scrapping, lease, or sale. A vessel which is being operated commercially in any business venture, including the business of building, repairing, scrapping, leasing, or selling (e.g., a slop barge used by a shipyard) cannot be covered by a Master Certificate. Any vessel for which a Certificate is required, but which is not eligible for a Master Certificate, must be covered by either an individual Certificate or a Fleet Certificate.

(b) An applicant for a Master Certificate must submit an Application form in the manner prescribed by §§ 138.40 through 138.60. An applicant must establish evidence of financial responsibility in accordance with § 138.80, by submission, for example, of an acceptable Master Insurance Guaranty Form, Surety Bond Guaranty Form, Master Financial Guaranty Form, or acceptable self-insurance documentation. An Application for a Master Certificate must be completed in full, except for Item 5. The applicant must make the following statement in Item 5: ''This is an application for a Master Certificate. The largest tank vessel to be covered by this application is [insert applicable gross tons] gross tons. The largest vessel other than a tank vessel is [insert applicable gross tons] gross tons.'' The dollar amount of financial responsibility evidenced by the applicant must be sufficient to meet the amount required under this subpart.

(c) Each Master Certificate issued by the Director, NPFC, indicates—

(1) The name of the applicant (*i.e.*, the builder, repairer, scrapper, lessor, or seller);

(2) The date of issuance and termination, encompassing a period of not more than 3 years; and

(3) The gross tons of the largest tank vessel and gross tons of the largest vessel other than a tank vessel eligible for coverage by that Master Certificate. (The Master Certificate does not identify the name of each vessel covered by the Certificate.)

(d) Each additional vessel which does not exceed the respective tonnages indicated on the Master Certificate and which is eligible for coverage by a Master Certificate is automatically covered by that Master Certificate. Before acquiring a vessel, by any means, including conversion of an existing vessel, that would have the effect of increasing the certificant's required applicable amount of financial responsibility (above that provided for issuance of the existing Master Certificate), the certificant must submit to the Director, NPFC, the following:

(1) Evidence of increased financial responsibility.

(2) A new certification fee.

(3) Either a new Application or a letter amending the existing Application to reflect the new gross tonnage which is to be indicated on a new Master Certificate.

(e) A person to whom a Master Certificate has been issued must submit to the Director, NPFC, every six months beginning the month after the month in which the Master Certificate is issued, a report indicating the name, previous name, type, and gross tonnage of each vessel covered by the Master Certificate during the preceding six-month reporting period and indicating which vessels, if any, are tank vessels.

§ 138.120 Certificates, denial or revocation.

(a) The Director, NPFC, may deny a Certificate when an applicant—

(1) Willfully or knowingly makes a false statement in connection with an Application or other submission or filing under this subpart for an initial or renewal Certificate;

(2) Fails to establish acceptable evidence of financial responsibility as required by this subpart;

(3) Fails to pay the required Application or certification fees;

(4) Fails to comply with or respond to lawful inquiries, regulations, or orders of the Coast Guard pertaining to the activities subject to this subpart; or

(5) Fails to timely file with the Director, NPFC, required statements, data, notifications, or affidavits.

(b) The Director, NPFC, may revoke a Certificate when a certificant—

(1) Willfully or knowingly makes a false statement in connection with an Application for an initial or a renewal Certificate, or in connection with any other filing required by this subpart;

(2) Fails to comply with or respond to lawful inquiries, regulations, or orders of the Coast Guard pertaining to the activities subject to this subpart; or

(3) Fails to timely file with the Director, NPFC, required statements, data, notifications, or affidavits.

(c) A Certificate is immediately invalid, and considered revoked, without prior notice, when the certificant—

(1) Fails to maintain acceptable evidence of financial responsibility as required by this subpart;

(2) Is no longer the responsible operator of the vessel or fleet in question; or

(3) Alters any copy of a Certificate.

(d) The Director, NPFC, will advise the applicant or certificant, in writing, of the intention to deny or revoke a Certificate under paragraph (a) or (b) of this section and will state the reason for the decision. Written advice from the Director, NPFC, that an incomplete Application will be considered withdrawn unless it is completed within a stated period, is the equivalent of a denial.

(e) If the intended revocation under paragraph (b) of this section is based on failure to timely file required financial statements, data, notifications, or affidavits with the Director, NPFC, the revocation is effective 10 days after the date of the notice of intention to revoke, unless, before the effective date of the revocation, the certificant demonstrates to the satisfaction of the Director, NPFC, that the required documents were timely filed or have been filed.

(f) If the intended denial is based on paragraph (a)(1) or (a)(4) of this section, or the intended revocation is based on paragraph (b)(1) or (b)(2) of

this section, the applicant or certificant may request, in writing, an opportunity to present information for the purpose of showing that the applicant or certificant is in compliance with the subpart. The request must be received by the Director, NPFC, within 10 days after the date of the notification of intention to deny or revoke. A Certificate subject to revocation under this paragraph remains valid until the Director, NPFC, issues a written decision revoking the Certificate.

(g) An applicant or certificant whose Certificate has been denied under paragraph (a) of this section or revoked under paragraph (b) or (c) of this section may request the Director, NPFC, to reconsider the denial or revocation. The certificant must submit a request for reconsideration, in writing, to the Director, NPFC, within 20 days of the date of the denial or revocation. The certificant must state the reasons for requesting reconsideration. The Director, NPFC, will generally issue a written decision on the request within 30 days of receipt, provided that, if the Director, NPFC, does not issue a decision within 30 days, the request for reconsideration will be deemed to have been denied, and the denial or revocation will be deemed to have been affirmed. Unless the Director, NPFC, issues a decision reversing the revocation, a revoked Certificate remains invalid. A decision by the Director, NPFC, affirming a denial or revocation, is final agency action.

§ 138.130 Fees.

(a) The Director, NPFC, will not issue or renew a Certificate until the fees set forth in paragraphs (c) and (d) of this section have been paid.

(b) For those using E-COFR, credit card payment is required. Otherwise, fees must be paid in United States currency by check, draft, or postal money order made payable to the ''U.S. Coast Guard''.

(c) An applicant who submits an Application under this subpart must pay a non-refundable Application fee of $200 for each Application (*i.e.*, individual Certificate, Fleet Certificate, or Master Certificate), except as follows:

(1) An Application for an additional (*i.e.*, supplemental) individual Certificate,

(2) A request to amend or renew an existing Certificate, or

(3) An Application submitted within 90 days following a revocation or other invalidation of a Certificate.

(d) In addition to the Application fee of $200, an applicant must pay a certification fee of $100 for each vessel for which a Certificate is requested. An applicant must pay the $100 certification fee for each vessel listed in, or later added to, an Application for an individual Certificate(s). An applicant must pay the $100 certification fee to renew or to reissue a Certificate for any reason, including, but not limited to, a vessel or operator name change.

(e) A certification fee is refunded, upon receipt of a written request, if the Application is denied or withdrawn before issuance of the Certificate. Overpayments of Application and certification fees are refunded, on request, only if the refund is for $100 or more. However, any overpayments not refunded will be credited, for a period of 3 years from the date of receipt of the monies by the Coast Guard, for the applicant's possible future use or transfer to another applicant under this subpart.

§ 138.140 Enforcement.

(a) Any person who fails to comply with this subpart with respect to evidence of financial responsibility under Section 1016 of OPA 90 (33 U.S.C. 2716) is subject to a civil penalty under Section 4303(a) of OPA 90 (33 U.S.C. 2716a(a)). In addition, under Section 4303(b) of OPA 90 (33 U.S.C. 2716a(b)), the Attorney General may secure such relief as may be necessary to compel compliance with the OPA 90 requirements of this subpart, including termination of operations. Further, any person who fails to comply with this subpart with respect to evidence of financial responsibility under Section 108(a) of CERCLA (42 U.S.C. 9608(a)), is subject to a Class I administrative civil penalty, a Class II administrative civil penalty or a judicial penalty under Section 109 of CERCLA (42 U.S.C. 9609).

(b) The Secretary of the Department in which the U.S. Coast Guard is operating will withhold or revoke the clearance required by 46 U.S.C. 60105 to any vessel subject to this subpart that has not provided the evidence of financial responsibility required by this subpart.

(c) The Coast Guard may deny entry to any port or place in the United States or the navigable waters of the United States, and may detain at a port or place in the United States in which it is located, any vessel subject to this subpart, which has not provided the evidence of financial responsibility required by this subpart.

(d) Any vessel subject to this subpart which is found operating in the navigable waters without having been issued a Certificate or maintained the necessary evidence of financial responsibility as required by this subpart is subject to seizure by, and forfeiture to, the United States.

(e) Knowingly and willfully using an altered copy of a Certificate, or using a copy of a revoked, expired or voided Certificate for anything other than recordkeeping purposes, is prohibited. If a Certificate is revoked, has expired or is rendered void for any reason, the certificant must cease using all copies of the Certificate for anything other than the operator's own historical recordkeeping purposes.

§ 138.150 Service of process.

(a) When executing the forms required by this subpart, each applicant, certificant and guarantor must designate thereon a person located in the United States as its agent for service of process for purposes of this subpart and for receipt of notices of responsible party designations and presentations of claims under the Acts (collectively referred to herein as ''service of process''). Each designated agent must acknowledge the agency designation in writing unless the agent has already furnished the Director, NPFC, with a master (*i.e.*, blanket) agency acknowledgment showing that the agent has agreed in advance to act as the United States agent for service of process for the applicant, certificant, or guarantor in question.

(b) If any applicant, certificant, or guarantor desires, for any reason, to change any designated agent, the applicant, certificant, or guarantor must notify the Director, NPFC, of the change. If a master agency acknowledgment for the new agent is not on file with NPFC, the applicant, certificant, or guarantor must furnish to the Director, NPFC, all the relevant information, including the new agent's acknowledgment, required in accordance with paragraph (a) of this section. In the event of death, disability, unavailability, or similar event of a designated agent, the applicant, certificant, or guarantor must designate another agent in accordance with paragraph (a) of this section within 10 days of knowledge of any such event. The applicant, certificant, or guarantor must submit the new designation to the Director, NPFC. The Director, NPFC, may deny or revoke a Certificate if an applicant, certificant, or guarantor fails to designate and maintain an agent for service of process.

(c) If a designated agent cannot be served because of death, disability, unavailability, or similar event, and another agent has not been designated under this section, then service of process on the Director, NPFC, will constitute valid service of process. Service of process on the Director, NPFC, will not be effective unless the server—

(1) Sends the applicant, certificant, or guarantor, as applicable (by registered mail, at the last known address on file with the Director, NPFC), a copy of each document served on the Director, NPFC; and

(2) Attests to this registered mailing, at the time process is served upon the Director, NPFC, indicating that the intent of the mailing is to effect service of process on the applicant, certificant, or guarantor and that service on the designated agent is not possible, stating the reason why.

Subpart B—OPA 90 Limits of Liability (Vessels and Deepwater Ports)

SOURCE: USCG–2008–0007, 74 FR 31368, July 1, 2009, unless otherwise noted.

§ 138.200 Scope.

This subpart sets forth the limits of liability for vessels and deepwater ports under Title I of the Oil Pollution Act of 1990, as amended (33 U.S.C. 2701, *et seq.*) (OPA 90), as adjusted under Section 1004(d) of OPA 90 (33 U.S.C. 2704(d)). This subpart also sets forth the method for adjusting the limits of liability by regulation for inflation under Section 1004(d) of OPA 90 (33 U.S.C. 2704(d)).

§ 138.210 Applicability.

This subpart applies to you if you are a responsible party for a vessel as defined under Section 1001(37) of OPA 90 (33 U.S.C. 2701(37)) or a deepwater port as defined under Section 1001(6) of OPA 90 (33 U.S.C. 2701(6)), unless your OPA 90 liability is unlimited under Section 1004(c) of OPA 90 (33 U.S.C. 2704(c)).

§ 138.220 Definitions.

(a) As used in this subpart, the following terms have the meaning as set forth in Section 1001 of OPA 90 (33 U.S.C. 2701): *deepwater port*, *gross ton*, *liability*, *oil*, *responsible party*, *tank vessel*, and *vessel*.

(b) As used in this subpart—

Annual CPI–U means the annual ''Consumer Price Index—All Urban Consumers, Not Seasonally Adjusted, U.S. City Average, All items, 1982–84=100'', published by the U.S. Department of Labor, Bureau of Labor Statistics.

Director, NPFC means the head of the U.S. Coast Guard, National Pollution Funds Center (NPFC).

Single-hull means the hull of a tank vessel that is constructed or adapted to carry, or that carries, oil in bulk as cargo or cargo residue, that is not a double hull as defined in 33 CFR part 157. *Single-hull* includes the hull of any such tank vessel that is fitted with double sides only or a double bottom only.

§ 138.230 Limits of liability.

(a) *Vessels*. The OPA 90 limits of liability for vessels are—

(1) For a single-hull tank vessel greater than 3,000 gross tons, the greater of $3,200 per gross ton or $23,496,000;

(2) For a tank vessel greater than 3,000 gross tons, other than a single-hull tank vessel, the greater of $2,000 per gross ton or $17,088,000.

(3) For a single-hull tank vessel less than or equal to 3,000 gross tons, the greater of $3,200 per gross ton or $6,408,000.

(4) For a tank vessel less than or equal to 3,000 gross tons, other than a single-hull tank vessel, the greater of $2,000 per gross ton or $4,272,000.

(5) For any other vessel, the greater of $1,000 per gross ton or $854,400.

(b) *Deepwater ports*. The OPA 90 limits of liability for deepwater ports are—

(1) For any deepwater port other than a deepwater port with a limit of liability established by regulation under Section 1004(d)(2) of OPA 90 (33 U.S.C. 2704(d)(2)) and set forth in paragraph (b)(2) of this section, $373,800,000;

(2) For deepwater ports with limits of liability established by regulation under Section 1004(d)(2) of OPA 90 (33 U.S.C. 2704(d)(2)):

(i) For the Louisiana Offshore Oil Port (LOOP), $87,606,000; and

(ii) [Reserved]

(c) [Reserved]

§ 138.240 Procedure for calculating limit of liability adjustments for inflation.

(a) *Formula for calculating a cumulative percent change in the Annual CPI–U*. The Director, NPFC, calculates the cumulative percent change in the Annual CPI–U from the year the limit of liability was established, or last adjusted by statute or regulation, whichever is later (*i.e.*, the Previous Period), to the most recently published Annual CPI–U (*i.e.*, the Current Period), using the following escalation formula:

Percent change in the Annual CPI–U = [(Annual CPI–U for Current Period − Annual CPI–U for Previous Period) ÷ Annual CPI–U for Previous Period] × 100.

This cumulative percent change value is rounded to one decimal place.

(b) *Significance threshold*. Not later than every three years from the year the limits of liability were last adjusted for inflation, the Director, NPFC, will evaluate whether the cumulative percent change in the Annual

CPI–U since that date has reached a significance threshold of 3 percent or greater. For any three-year period in which the cumulative percent change in the Annual CPI–U is less than 3 percent, the Director, NPFC, will publish a notice of no inflation adjustment to the limits of liability in the FEDERAL REGISTER. If this occurs, the Director, NPFC, will recalculate the cumulative percent change in the Annual CPI–U since the year in which the limits of liability were last adjusted for inflation each year thereafter until the cumulative percent change equals or exceeds the threshold amount of 3 percent. Once the 3-percent threshold is reached, the Director, NPFC, will increase the limits of liability, by regulation, for all source categories (including any new limit of liability established by statute or regulation since the last time the limits of liability were adjusted for inflation) by an amount equal to the cumulative percent change in the Annual CPI–U from the year each limit was established, or last adjusted by statute or regulation, whichever is later. Nothing in this paragraph shall prevent the Director, NPFC, in the Director's sole discretion, from adjusting the limits of liability for inflation by regulation issued more frequently than every three years.

(c) *Formula for calculating inflation adjustments.* The Director, NPFC, calculates adjustments to the limits of liability in § 138.230 of this part for inflation using the following formula:

New limit of liability = Previous limit of liability + (Previous limit of liability × percent change in the Annual CPI–U calculated under paragraph (a) of this section), then rounded to the closest $100.

(d) [Reserved]

[USCG–2005–21780, 73 FR 53697, Sept. 17, 2008, as amended by USCG–2012–0306, 77 FR 37315, June 21, 2012]

SUBCHAPTER N—OUTER CONTINENTAL SHELF ACTIVITIES

PART 140—GENERAL

Subpart A—General

Sec.
140.1 Purpose.
140.3 Applicability.
140.4 Relationship to other law.
140.5 Exemptions during construction.
140.7 Incorporation by reference.
140.10 Definitions.
140.15 Equivalents and approved equipment.
140.20 Delegations.
140.25 Appeals.
140.30 Judicial review.
140.35 Sanctions.
140.40 Processing penalty cases.

Subpart B—Inspections

140.101 Inspection by Coast Guard marine inspectors or Bureau of Safety and Environmental Enforcement inspectors.
140.103 Annual inspection of fixed OCS facilities.
140.105 Correction of deficiencies and hazards.

Subpart C—Investigations

140.201 General.
140.203 Investigation procedures.
140.205 Subpoenas.

AUTHORITY: 43 U.S.C. 1333, 1348, 1350, 1356; Department of Homeland Security Delegation No. 0170.1.

SOURCE: CGD 78–160, 47 FR 9376, Mar. 4, 1982, unless otherwise noted.

Subpart A—General

§ 140.1 Purpose.

This subchapter is intended to promote safety of life and property on Outer Continental Shelf (OCS) facilities, vessels, and other units engaged in OCS activities, protect the marine environment, and implement the Outer Continental Shelf Lands Act (43 U.S.C. 1331 *et seq.*), as amended by the Outer Continental Shelf Lands Act Amendments of 1978 (Pub. L. 95–372, 92 Stat. 629).

§ 140.3 Applicability.

Unless otherwise stated, this subchapter applies to OCS facilities, vessels, and other units engaged in OCS activities as the term ''OCS activities'' is defined in § 140.10. This subchapter does not apply to pipelines and deepwater ports (as the term ''deepwater port'' is defined in section 3(10) of the Deepwater Port Act of 1974 (33 U.S.C. 1502)).

§ 140.4 Relationship to other law.

(a) Design and equipment requirements of this subchapter for OCS facilities, including mobile offshore drilling units in contact with the seabed of the OCS for exploration or exploitation of subsea resources, are in addition to the regulations and orders of the U.S. Geological Survey applicable to those facilities.

(b) Any apparent conflict between the application of any requirement of this subchapter and any regulation or order of the U.S. Geological Survey should immediately be brought to the attention of the Officer in Charge, Marine Inspection.

(c) This subchapter does not establish design requirements for fixed OCS facilities or regulate drilling or production equipment on any OCS facility or attending vessel, except for matters affecting navigation or workplace safety or health.

§ 140.5 Exemptions during construction.

The Officer in Charge, Marine Inspection, may exempt any unit under construction from any requirements of this subchapter that would be impracticable or unreasonable to apply during construction or erection of the unit.

§ 140.7 Incorporation by reference.

(a) Certain materials are incorporated by reference into this subchapter with the approval of the Director of the Federal Register in accordance with 5 U.S.C. 552(a). To enforce any edition other than the one listed in paragraph (b) of this section, notice of the change must be published in the FEDERAL REGISTER and the material made available to the public. All approved material is available for inspection at U.S. Coast Guard, Office of Compliance (CG–543), 2100 2nd St. SW., Stop 7581, Washington, DC 20593–7581

and at the National Archives and Records Administration (NARA). For information on the availability of this material at NARA, call 202–741–6030, or go to: *http://www.archives.gov/federal_register/code_of_federal_regulations/ibr_locations.html*. All approved material is available from the sources indicated in paragraph (b) of this section.

(b) The material approved for incorporation by reference in this subchapter and the sections affected are as follows:

American National Standards Institute (ANSI)	
11 West 42nd Street, New York, NY 10036.	
ANSI A10.14–1975—Requirements for Safety Belts, Harnesses, Lanyards, Lifelines, and Drop Lines for Construction and Industrial Use.	142.42
ANSI/UL1123–1987—Standard for Marine Buoyant Devices.	143.405
ANSI Z41–1983—American National Standard for Personal Protection-Protective Footwear.	142.33
ANSI Z87.1–1979—Practice for Occupational and Educational Eye and Face Protection.	142.27
ANSI Z88.2–1980—Practices for Respiratory Protection.	142.39
ANSI Z89.1–1981—Safety Requirements for Industrial Head Protection.	142.30
International Maritime Organization (IMO)	
IMO Sales, New York Nautical Instrument and Service Corp., 140 W. Broadway, New York, NY 10013	
IMO Assembly Resolution A.414 (XI) Code for Construction and Equipment of Mobile Offshore Drilling Units.	143.207; 146.205

[CGD 84–098b, 54 FR 21571, May 18, 1989, as amended by CGD 96–026, 61 FR 33665, June 28, 1996; 69 FR 18803, Apr. 9, 2004; USCG–2004–18057, 69 FR 34926, June 23, 2004; USCG–2010–0351, 75 FR 36283, June 25, 2010]

§ 140.10 Definitions.

As used in this subchapter:

Act means the Outer Continental Shelf Lands Act of 1953 (43 U.S.C. 1331 *et seq.*), as amended by the Outer Continental Shelf Lands Act Amendments of 1978 (Pub. L. 95–372).

Approved means approved by the Commandant, unless otherwise indicated.

Attending vessel means a vessel which is moored close to and readily accessible from an OCS facility for the purpose of providing power, fuel, or other services to the operation being conducted on the facility.

Bureau of Safety and Environmental Enforcement inspector or BSEE inspector means an individual employed by the Bureau of Safety and Environmental Enforcement who inspects fixed OCS facilities on behalf of the Coast Guard to determine whether the requirements of this subchapter are met.

Commandant means Commandant of the Coast Guard or that person's authorized representative.

Development means those activities which take place following discovery of minerals in paying quantities, including, but not limited to, geophysical activity, drilling, and platform construction, and which are for the purpose of ultimately producing the minerals discovered.

District Commander means an officer who commands a Coast Guard District described in part 3 of this chapter or that person's authorized representative.

Exploration means the process of searching for minerals, including, but not limited to, (1) geophysical surveys where magnetic, gravity, seismic, or other systems are used to detect or imply the presence of such minerals, and (2) any drilling, whether on or off known geological structures, including the drilling of a well in which a discovery of oil or natural gas in paying quantities is made and the drilling of any additional delineation well after the discovery which is needed to delineate any reservoir and to enable the lessee to determine whether to proceed with development and production.

Fixed OCS facility means a bottom founded OCS facility permanently attached to the seabed or subsoil of the OCS, including platforms, guyed towers, articulated gravity platforms, and other structures.

Floating OCS facility means a buoyant OCS facility securely and substantially

moored so that it cannot be moved without a special effort. This term includes tension leg platforms and permanently moored semisubmersibles or shipshape hulls but does not include mobile offshore drilling units and other vessels.

Investigating officer means a person assigned by the Commandant, a District Commander, or an Officer in Charge, Marine Inspection, to conduct an investigation of an accident, casualty, or other incident.

Manned facility means an OCS facility on which people are routinely accommodated for more than 12 hours in successive 24 hour periods.

Manned platform means a fixed OCS facility on which people are routinely accommodated for more than 12 hours in successive 24 hour periods.

Marine inspector means a person designated as such by an Officer in Charge, Marine Inspection, to perform inspections of units to determine whether or not the requirements of laws administered by the Coast Guard and of Coast Guard regulations are met.

Minerals includes oil, gas, sulphur, geopressured-geothermal and associated resources, and all other minerals which are authorized by an Act of Congress to be produced from ''public lands'' as defined in section 103 of the Federal Lands Policy and Management Act of 1976 (43 U.S.C. 1702(e)).

Mobile offshore drilling unit or *MODU* means a vessel, other than a public vessel of the United States, capable of engaging in drilling operations for exploration or exploitation of subsea resources.

Officer in Charge, Marine Inspection means a person who commands a Marine Inspection Zone described in part 3 of this chapter and who is immediately responsible for the performance of duties with respect to inspections, enforcement, and administration of regulations governing units.

Operator means—(1) In the case of a vessel, a charterer by demise or any other person who is responsible for the operation, manning, victualing, and supplying of the vessel; or

(2) In the case of an OCS facility, the operator as defined in 30 CFR 250.2(gg).

Outer Continental Shelf or *OCS* means all submerged lands lying seaward and outside of the area of ''lands beneath navigable waters'' as defined in section 2(a) of the Submerged Lands Act (43 U.S.C. 1301(a)) and of which the subsoil and seabed appertain to the United States and are subject to its jurisdiction and control.

OCS activity means any offshore activity associated with exploration for, or development or production of, the minerals of the Outer Continental Shelf.

OCS facility means any artificial island, installation, or other device permanently or temporarily attached to the subsoil or seabed of the Outer Continental Shelf, erected for the purpose of exploring for, developing, or producing resources therefrom, or any such installation or other device (other than a ship or vessel) for the purpose of transporting such resources. The term includes mobile offshore drilling units when in contact with the seabed of the OCS for exploration or exploitation of subsea resources. The term does not include any pipeline or deepwater port (as the term ''deepwater port'' is defined in section 3(10) of the Deepwater Port Act of 1974 (33 U.S.C. 1502)).

Owner means a person holding title to or, in the absence of title, other indicia of ownership of a unit; however, this does not include a person who holds indicia of ownership primarily to protect a security interest in the unit and does not participate in the management or operation of the unit.

Person means an individual, association, partnership, consortium, joint venture, private, public, or municipal firm or corporation, or a government entity.

Person in charge means the master or other individual designated as such by the owner or operator under §146.5 of this subchapter or 46 CFR 109.107.

Personnel means individuals who are employed by leaseholders, permit holders, operators, owners, contractors, or subcontractors and who are on a unit by reason of their employment.

Production means those activities which take place after the successful completion of any means for the removal of minerals, including, but not

limited to, such removal, field operations, transfer of minerals to shore, operation monitoring, maintenance, and workover.

Rebuilt means having had substantial alteration or reconstruction of the hull or principal structural component.

Standby vessel means a vessel meeting the requirements of part 143, subpart E, of this chapter and specifically designated in an Emergency Evacuation Plan under § 146.140 or § 146.210 of this chapter to provide rapid evacuation assistance in the event of an emergency.

Unit means any OCS facility, vessel, rig, platform, or other vehicle or structure, domestic or foreign.

Unmanned facility means an OCS facility, other than a floating facility or mobile offshore drilling unit, which is not a manned facility even though it may be continuously serviced by an attending vessel.

Unmanned platform means a fixed, bottom-founded OCS facility which is not a manned facility even though it may be continuously serviced by an attending vessel.

Vessel means every description of watercraft or other artificial contrivance used, or capable of being used, as a means of transportation on water.

[CGD 78–160, 47 FR 9376, Mar. 4, 1982, as amended by CGD 79–077, 51 FR 25059, July 10, 1986; CGD 84–098b, 54 FR 21571, May 18, 1989; USCG–2001–9045, 67 FR 5916, Feb. 7, 2002; USCG–2011–0257, 76 FR 31837, June 2, 2011; USCG–2013–0797, 79 FR 36405, June 27, 2014]

§ 140.15 Equivalents and approved equipment.

(a) The use of alternate equipment or procedures for those specified in this subchapter may be permitted by an Officer in Charge, Marine Inspection, to the extent and upon conditions as will insure a degree of safety comparable to or greater than that provided by the minimum standards in this subchapter.

(b) Where equipment in this subchapter is required to be of an approved type, the equipment requires the specific approval of the Commandant. Approvals are published in the FEDERAL REGISTER and COMDTINST M16714.3 (Series) Equipment List, available from Commandant (CG–521), 2100 2nd St., SW., Stop 7126, Washington, DC 20593–7126.

(c) Specifications for certain items required to be of an approved type are contained in 46 CFR Parts 160 through 164.

[CGD 78–160, 47 FR 9376, Mar. 4, 1982, as amended at CGD 88–052, 53 FR 25121, July 1, 1988; CGD 96–026, 61 FR 33665, June 28, 1996; USCG–2010–0351, 75 FR 36283, June 25, 2010]

§ 140.20 Delegations.

(a) Each District Commander is responsible for the administration and enforcement of the regulations in this subchapter within that person's assigned district.

(b) Under the general superintendence of the District Commander, the Officer in Charge, Marine Inspection, is delegated authority to administer and enforce the regulations in this subchapter.

(c) Authority delegated under this section may be redelegated as necessary by the delegate.

§ 140.25 Appeals.

(a) Any person directly affected by an action or decision of an Officer in Charge, Marine Inspection, under the Act or the regulations in this subchapter may request reconsideration of that action or decision. If still dissatisfied, that person may appeal the action or decision of the Officer in Charge, Marine Inspection, within 30 days to the District Commander of the District in which the action was taken or the decision made. The District Commander issues a decision after reviewing the appeal submitted under this paragraph.

(b) Any person not satisfied with the decision of a District Commander may appeal that decision within 30 days to the Commandant, who issues a ruling after reviewing the appeal submitted under this paragraph. Rulings of the Commandant constitute final agency action.

(c) An appeal to the District Commander or Commandant:

(1) Must be made in writing, except in an emergency when an oral appeal may be accepted;

(2) Must be submitted to the District Commander of the District in which the action was taken or the decision made;

(3) Must describe the decision or action being appealed;

(4) Must state the reasons why the action or decision should be set aside or modified; and

(5) May contain any supporting documents and evidence that the appellant wishes to have considered.

(d) Pending determination of any appeal, the action or decision appealed remains in effect, unless suspended by the District Commander to whom the appeal was made or by the Commandant.

§ 140.30 Judicial review.

(a) Nothing in this subchapter shall be construed to prevent any interested party from seeking judicial review as authorized by law.

(b) Judicial review of the regulations in this subchapter, or any final ruling or order of the Commandant or that person's delegate pursuant to the Act or the regulations in this subchapter, is governed by the judicial review provisions of section 23 of the Act (43 U.S.C. 1349).

§ 140.35 Sanctions.

(a) Any person who fails to comply with:

(1) Any provision of the Act;

(2) Any regulation in this subchapter; or

(3) Any order issued under the Act or the regulations in this subchapter by the Commandant, a District Commander, or an Officer in Charge, Marine Inspection, after notice of the failure and after expiration of any reasonable period allowed for corrective action, shall be liable for a civil penalty for each day of the continuance of the failure.

(b) Any person who knowingly and willfully:

(1) Violates any provision of the Act;

(2) Violates any regulation in this subchapter designed to protect health, safety, or the environment;

(3) Violates any order of the Commandant, District Commander, or Officer in Charge, Marine Inspection, issued under the Act or the regulations in this subchapter that is designed to protect health, safety, or the environment;

(4) Makes any false statement, representation, or certification in any application, record, report, or other document filed or required to be maintained under the Act or the regulations in this subchapter;

(5) Falsifies, tampers with, or renders inaccurate any monitoring device or method of record required to be maintained under this Act or the regulations in this subchapter; or

(6) Reveals any data or information required to be kept confidential by the Act shall, upon conviction, be punished by a fine of not more than $100,000, or by imprisonment for not more than ten years, or both. Each day that a violation under paragraph (b)(1), (b)(2), or (b)(3) of this section continues, or each day that any monitoring device or data recorder remains inoperative or inaccurate because of any activity described in paragraph (b)(5) of this section, constitutes a separate violation.

(c) Whenever a corporation or other entity is subject to prosecution under paragraph (b) of this section, any officer or agent of the corporation or entity who knowingly and willfully authorized, ordered, or carried out the prescribed activity shall be subject to the same fines or imprisonment, or both, as provided for under paragraph (b) of this section.

(d) The penalties prescribed in this section are concurrent and cumulative and the exercise of one does not preclude the exercise of the others. Further, the penalties prescribed in this section are in addition to any other penalties afforded by any other law or regulation.

[CGD 78–160, 47 FR 9376, Mar. 4, 1982, as amended by CGD 96–052, 62 FR 16703, Apr. 8, 1997]

§ 140.40 Processing penalty cases.

Apparent violations of the regulations in this subchapter are processed in accordance with subpart 1.07 of 33 CFR part 1 on civil and criminal penalty proceedings, except as follows:

(a) The District Commander refers civil penalty cases to the Secretary of the Interior, or that person's delegate, who, under the Act, assesses, collects, and compromises civil penalties.

(b) If a possible violation investigated by the Coast Guard carries

both a civil and a criminal penalty, the District Commander determines whether to refer the case to the U.S. Attorney for criminal prosecution or to the Secretary of the Interior, or that person's delegate, for civil penalty proceedings.

(c) When the U.S. Attorney declines to institute criminal proceedings, the District Commander decides whether to refer the case to the Secretary of the Interior, or that person's delegate, for civil penalty proceedings or to close the case.

Subpart B—Inspections

§ 140.101 Inspection by Coast Guard marine inspectors or Bureau of Safety and Environmental Enforcement inspectors.

(a) Each unit engaged in OCS activities is subject to inspection by the Coast Guard.

(b) On behalf of the Coast Guard, each fixed OCS facility engaged in OCS activities is subject to inspection by the Bureau of Safety and Environmental Enforcement (BSEE).

(c) Under the direction of the Officer in Charge, Marine Inspection, Coast Guard marine inspectors may inspect units engaged in OCS activities, and BSEE inspectors may inspect fixed OCS facilities, to determine whether the requirements of this subchapter are met. These inspections may be conducted with or without advance notice at any time deemed necessary by the Officer in Charge, Marine Inspection, or BSEE.

(d) As part of an inspection, a Coast Guard marine inspector or a BSEE inspector may review records and require and observe the conduct of emergency drills and other tests and procedures as may be necessary to demonstrate to that person's satisfaction that the unit and its equipment are in full compliance with applicable Coast Guard regulations. The Coast Guard marine inspector or the BSEE inspector consults with the person in charge of the unit before requiring a drill or other test or procedure to be conducted to minimize disruption of unit activities and risk to life or property.

(e) Coast Guard inspections of foreign units recognize valid international certificates accepted by the United States, including Safety of Life at Sea (SOLAS), Loadline, and Mobile Offshore Drilling Unit (MODU) Code certificates for matters covered by the certificates, unless there are clear grounds for believing that the condition of the unit or its equipment does not correspond substantially with the particulars of the certificate.

(f) Coast Guard marine inspectors conduct an initial inspection of each fixed OCS facility to determine whether the facility is in compliance with the requirements of this subchapter.

[CGD 78–160, 47 FR 9376, Mar. 4, 1982, as amended by CGD 84–098a, 53 FR 18980, May 26, 1988; USCG–2001–9045, 67 FR 5916, Feb. 7, 2002; USCG–2011–0257, 76 FR 31837, June 2, 2011; USCG–2013–0797, 79 FR 35405, June 27, 2014]

§ 140.103 Annual inspection of fixed OCS facilities.

(a) The owner or operator of each fixed OCS facility shall ensure that the facility is inspected, at intervals not to exceed 12 months, to determine whether the facility is in compliance with the requirements of this subchapter.

(b) Except for initial inspections under § 140.101(f), inspections by Coast Guard marine inspectors and Bureau of Safety and Environmental Enforcement (BSEE) inspectors do not meet the requirements for an inspection under paragraph (a) of this section.

(c) Except for initial inspections under § 140.101(f), the results of the inspection under paragraph (a) of this section must be recorded on form CG–5432. Forms CG–5432 may be obtained from the Officer in Charge, Marine Inspection. A copy of the completed form must be kept for 2 years after the inspection under paragraph (a) of this section is conducted and the form made available to the Coast Guard and BOEMRE on request. For manned fixed OCS facilities, the copy of the completed form must be kept on the facility. For unmanned fixed OCS facilities, the copy of the completed form must be kept either at the nearest manned fixed OCS facility or, if there is no manned fixed OCS facility in the area, at the nearest field office of the owner or operator. In addition, the owner or operator must submit, to the appropriate BSEE District office, a copy of

each completed form CG–5432 that indicates outstanding deficiencies or hazards, within 30 days after completion of the inspection.

[CGD 84–098a, 53 FR 18980, May 26, 1988, as amended by USCG–2001–9045, 67 FR 5916, Feb. 7, 2002; USCG–2011–0257, 76 FR 31837, June 2, 2011; USCG–2013–0797, 79 FR 36405, June 27, 2014]

§ 140.105 Correction of deficiencies and hazards.

(a) Lifesaving and fire fighting equipment which is found defective during an inspection by a Coast Guard marine inspector or a Bureau of Safety and Environmental Enforcement (BSEE) inspector and which, in the opinion of the inspector, cannot be satisfactorily repaired must be so mutilated in the presence of the inspector that it cannot be used for the purpose for which it was originally intended. Lifesaving and fire fighting equipment subsequently determined to be unrepairable must be similarly mutilated in the presence of the person making that determination.

(b) Any deficiency or hazard discovered during an inspection by a Coast Guard marine inspector or a BSEE inspector is reported to the unit's owner or operator, who shall have the deficiency or hazard corrected or eliminated as soon as practicable and within the period of time specified by the inspector.

(c) Deficiencies and hazards discovered during an inspection of a fixed OCS facility under § 140.103(a) must be corrected or eliminated, if practicable, before the form CG–5432 is completed. Deficiencies and hazards that are not corrected or eliminated by the time the form is completed must be indicated on the form as ''outstanding'' and the form submitted to the appropriate BSEE District office. Upon receipt of a form CG–5432 indicating outstanding deficiencies or hazards, BSEE informs, by letter, the owner or operator of the fixed OCS facility of the deficiencies or hazards and the time period specified to correct or eliminate the deficiencies or hazards.

(d) For lifesaving and fire fighting equipment deficiencies on fixed OCS facilities that cannot be corrected before the submission of form CG–5432, the owner or operator must contact the appropriate BSEE District Supervisor to request a time period for repair of the item. The owner or operator must include a description of the deficiency and the time period approved by BSEE for correction of the deficiency in the comment section of form CG–5432.

(e) Where a deficiency or hazard remains uncorrected or uneliminated after the expiration of the time specified for correction or elimination, the Officer in Charge, Marine Inspection or BSEE (for deficiencies or hazards discovered by BSEE during an inspection of a fixed OCS facility), initiates appropriate enforcement measures.

[CGD84–098a, 53 FR 18981, May 26, 1988, as amended by USCG–2001–9045, 67 FR 5916, Feb. 7, 2002; USCG–2013–0797, 79 FR 36405, June 27, 2014]

Subpart C—Investigations

§ 140.201 General.

Under the direction of the Officer in Charge, Marine Inspection, investigating officers investigate the following incidents occurring as a result of OCS activities:

(a) Death.

(b) Injury resulting in substantial impairment of any bodily unit or function.

(c) Fire which causes death, serious injury or property damage exceeding $25,000.

(d) Oil spillage exceeding two hundred barrels of oil in one occurrence during a thirty-day period.

(e) Other injuries, casualties, accidents, complaints of unsafe working conditions, fires, pollution, and incidents occurring as a result of OCS activities as the Officer in Charge, Marine Inspection, deems necessary to promote the safety of life or property or protect the marine environment.

§ 140.203 Investigation procedures.

(a) Insofar as practicable, investigations conducted pursuant to this subchapter shall follow the procedures of 46 CFR part 4.

(b) Representatives of the U.S. Geological Survey may participate in these investigations. This participation may include, but is not limited to:

(1) Participating in a joint on-scene investigation;

(2) Making recommendations concerning the scope of the investigation;

(3) Calling and examing witnesses; and

(4) Submitting or requesting additional evidence.

(c) Reports of investigations conducted under this subchapter shall be made available to parties to the investigation and the public upon completion of agency action.

§ 140.205 Subpoenas.

(a) In any investigation conducted pursuant to this subchapter, the investigating officer shall have the power to administer necessary oaths, subpoena witnesses, and require the production of books, papers, documents, and any other evidence.

(b) Attendance of witnesses or the production of books, papers, documents, or any other evidence shall be compelled by a process similar to that used in the District Courts of the United States.

PART 141—PERSONNEL

Subpart A—Restrictions on Employment

Sec.
141.1 Purpose.
141.5 Applicability.
141.10 Definitions.
141.15 Restrictions on employment.
141.20 Exemptions from restrictions on employment.
141.25 Evidence of citizenship.
141.30 Evidence of status as a resident alien.
141.35 Records to be kept by the employer.

AUTHORITY: 43 U.S.C. 1356; 46 U.S.C. 70105; 49 CFR 1.46(z).

SOURCE: CGD 78–160, 47 FR 9379, Mar. 4, 1982, unless otherwise noted.

Subpart A—Restrictions on Employment

§ 141.1 Purpose.

This subpart prescribes rules governing restrictions on the employment of personnel on units engaged in OCS activities.

§ 141.5 Applicability.

(a) This subpart applies to employment of personnel on units engaged in OCS activities, except as provided in paragraph (b) of this section.

(b) This subpart does not apply to employment of personnel on any:

(1) Vessel subject to the citizenship requirements of 46 U.S.C. 8103 for pilots, crew, and officers holding a valid license or MMC with officer endorsement when the vessel is transiting to or from an OCS facility or a United States port;

(2) Vessel subject to the citizenship requirements of 46 U.S.C. 7102 and 8103 for officers and crew on federally subsidized or documented vessels; or

(3) Unit over 50 percent of which is owned by one or more citizens of a foreign nation or with respect to which one or more citizens of a foreign nation have the right effectively to control, except to the extent and to the degree that the President determines that the government of such foreign nation or any of its political subdivisions has implemented, by statute, regulation, policy, or practice, a national manning requirement for equipment engaged in the exploration, development, or production of oil or gas in its offshore areas.

(c) The Commandant may, upon request or upon that person's own initiative, determine whether over 50 percent of a particular unit is owned by citizens of a foreign nation or whether citizens of a foreign nation have the right effectively to control the unit.

(d) In determining whether ownership or a right effectively to control exists, the Commandant may consider operational control of a unit, management responsibility, title, lease and charter arrangements, and financial interests.

(e) The owner or operator of any unit affected is notified of the Commandant's determination.

(Information collection requirements contained in paragraph (c) were approved by the Office of Management and Budget under OMB control number 2130–0182)

[CGD 78–160, 47 FR 9379, Mar. 4, 1982, as amended by CGD 97–023, 62 FR 33363, June 19, 1997; USCG–2006–24371, 74 FR 11212, Mar. 16, 2009]

§ 141.10 Definitions.

As used in this subpart:

Citizens of the United States means:

(1) In the case of an individual, one who is a native born, derivative, or fully naturalized citizen of the United States;

(2) In the case of a partnership, unincorporated company, or association, one in which 50% or more of the controlling interest is vested in citizens of the United States; or

(3) In the case of a corporation, one which is incorporated under the laws of the United States or of any State thereof.

Citizen of a foreign nation means:

(1) In the case of an individual, one who is not a citizen of the United States;

(2) In the case of a partnership, unincorporated company, or association, one in which more than 50% of the controlling interest is vested in citizens of a nation other than the United States; or

(3) In the case of a corporation, one which is incorporated under the laws of a nation other than the United States so long as (i) the title to a majority of the stock thereof is free from any trust or fiduciary obligation in favor of any citizen of the United States; (ii) the majority of the voting power in the corporation is not vested in any citizen of the United States; (iii) through any contract or understanding, the majority of the voting power may not be exercised directly or indirectly on behalf of any citizen of the United States; or (iv) by no other means, control of the corporation is conferred upon or permitted to be exercised by any citizen of the United States.

Resident alien means an alien lawfully admitted to the United States for permanent residence in accordance with section 101(a)(20) of the Immigration and Nationality Act of 1952, as amended, 8 U.S.C. 1101(a)(20).

[CGD 78–160, 47 FR 9379, Mar. 4, 1982, as amended by USCG–2006–24371, 74 FR 11212, Mar. 16, 2009; USCG–2013–0916, 78 FR 69296, Nov. 19, 2013]

§ 141.15 Restrictions on employment.

(a) Each employer of personnel on any unit engaged in OCS activities that is subject to this part must employ, as members of the regular complement of the unit, only citizens of the United States or resident aliens except as provided by § 141.20.

(b) As used in paragraph (a) of this section, ''regular complement of a unit'' means those personnel necessary for the routine functioning of the unit, including marine officers and crew; industrial personnel on the unit, such as toolpushers, drillers, roustabouts, floor hands, crane operators, derrickmen, mechanics, motormen, and general maintenance personnel; and support personnel on the unit, such as cooks, stewards and radio operators. The term does not include specialists, professionals, or other technically trained personnel called in to handle emergencies or other temporary operations; extra personnel on a unit for training; and other personnel temporarily on a unit for specialized operations, such as construction, alteration, well logging, or unusual repairs or emergencies.

(c) The Officer in Charge, Marine Inspection, may determine whether a particular individual or position is part of the regular complement of a unit. A copy of the determination is provided to the owner or operator of the unit affected.

(Approved by the Office of Management and Budget under OMB control number 2130–0182)

[CGD 78–160, 47 FR 9379, Mar. 4, 1982, as amended by USCG–1998–3799, 63 FR 35530, June 30, 1998]

§ 141.20 Exemptions from restrictions on employment.

(a) An employer may request an exemption from the restrictions on employment in § 141.15 in order to employ persons other than citizens of the United States or resident aliens as part of the regular complement of the unit under the following circumstances:

(1) When specific contractual provisions or national registry manning requirements in effect on September 18, 1978 provide that a person other than a citizen of the United States or a resident alien is to be employed on a particular unit.

(2) When there is not a sufficient number of citizens of the United States or resident aliens qualified and available for the work.

(3) When the President determines with respect to a particular unit that the employment of only citizens of the

United States or resident aliens is not consistent with the national interest.

(b) The request must be in writing, identify the provision of paragraph (a) of this section relied upon, and:

(1) If involving specific contractual provisions under paragraph (a)(1) of this section, list the persons claimed exempt and contain a copy of the contract;

(2) If involving persons without an H–2 Visa under paragraph (a)(2) of this section, list the persons or positions sought to be exempted; or

(3) If under paragraph (a)(3) of this section, identify the unit involved and contain any information in support of the claim.

(c) Requests must be submitted to the Commandant (CG–543), 2100 2nd St. SW., Stop 7581, Washington, DC 20593–7581.

(d) Upon receipt of a request under paragraph (a)(2) of this section, the Coast Guard seeks information from the Department of Labor concerning whether there are citizens of the United States or resident aliens qualified and available for work. If information is provided that citizens of the United States or resident aliens are qualified and available, the employer may be required to seek their employment before the request is approved.

(e) Upon receipt of a request under paragraph (a)(3) of this section and after consulting with other Federal agencies as appropriate, the Commandant forwards the request and the comments of the Coast Guard and other interested agencies to the President for determination.

(f) Upon approval by the President for request under paragraph (a)(3) of this section or by the Coast Guard for all other requests, the Coast Guard issues a certification of the exemption. A certification issued under paragraph (a)(2) of this section is valid for one year from the date of issuance.

(g) If, within 30 days of receipt by the Coast Guard of a request under paragraph (a)(2) of this section, the Coast Guard does not make a determination or advise the employer that additional time for consideration is necessary, the request is considered approved for a period of 90 days from the end of the 30 day period.

(h) A request need not be submitted for persons who are not citizens of the United States or resident aliens and who:

(1) Are employed under the national registry manning requirements exception in paragraph (a)(1) of this section; or

(2) Have been classified and admitted to the United States as temporary workers under 8 U.S.C. 1101(a)(15)(H)(ii) for work in a position for which admitted.

(Approved by the Office of Management and Budget under OMB control number 2130–0182)

[CGD 78–160, 47 FR 9379, Mar. 4, 1982, as amended by CGD 96–026, 61 FR 33665, June 28, 1996; USCG–2010–0351, 75 FR 36283, June 25, 2010]

§ 141.25 Evidence of citizenship.

(a) For the purposes of this part, the employer may accept as sufficient evidence that a person is a citizen of the United States any one of the following documents and no others:

(1) A valid merchant mariner's document issued by the Coast Guard which shows the holder to be citizen of the United States.

(2) An original or certified copy of a birth certificate or birth registration issued by a state or the District of Columbia.

(3) A United States passport.

(4) A Certificate of Citizenship issued by the Immigration and Naturalization Service.

(5) A Certificate of Naturalization issued by a Naturalization Court.

(6) A letter from the Coast Guard issued under paragraph (d) of this section.

(b) If a person does not have one of the documents listed in paragraphs (a)(1) through (a)(6) of this section, that person may appear in person before an Officer in Charge, Marine Inspection, and submit one or more of the following documents which may be considered as evidence that the applicant is a citizen of the United States:

(1) A Certificate of Derivative Citizenship or a Certificate of Naturalization of either parent and a birth certificate of the applicant or other evidence satisfactorily establishing that the applicant was under 21 years of age

at the time of the parent's naturalization.

(2) An original or certified copy of a birth certificate from a political jurisdiction outside the United States which demonstrates citizenship status.

(3) A Baptismal certificate or parish record recorded within one year after birth.

(4) A statement of a practicing physician certifying that the physician attended the birth and has a record showing the date on which the birth occurred.

(5) A commission, or evidence of commission, in the Armed Forces of the United States which shows the holder to be a citizen of the United States.

(6) A continuous discharge book or certificate of identification issued by the Coast Guard or the former Bureau of Marine Inspection, provided the document shows that the applicant produced satisfactory evidence of citizenship at the time the document was issued.

(7) A delayed certificate of birth issued under a state seal, provided there are no collateral facts indicating fraud in its procurement.

(8) A report of the Census Bureau showing the earliest available record of the applicant's age or birth.

(9) Affidavits of parents, relatives, or two or more responsible citizens of the United States, school records; immigration records; insurance policies; or other records which support the citizenship claim.

(c) In any case where doubt exists concerning evidence of citizenship submitted under paragraph (b) of this section, the Officer in Charge, Marine Inspection, may refer the matter to the United States Immigration and Naturalization Service for an advisory opinion.

(d) If the documents submitted under paragraph (b) of this section are determined by the Officer in Charge, Marine Inspection, to be sufficient evidence that the applicant is a citizen of the United States, the Coast Guard issues the applicant a letter acknowledging this determination.

(Approved by the Office of Management and Budget under OMB control number 2130–0182)

[CGD 78–160, 47 FR 9379, Mar. 4, 1982, as amended by USCG–2006–24371, 74 FR 11212, Mar. 16, 2009]

§ 141.30 Evidence of status as a resident alien.

For the purposes of this part, the employer may accept as sufficient evidence that a person is a resident alien any one of the following documents and no others:

(a) A valid merchant mariner's document issued by the Coast Guard.

(b) An alien registration receipt card issued by the Immigration and Customs Enforcement Agency certifying that the card holder has been admitted to the United States as an immigrant.

(c) A declaration of intention to become a citizen of the United States issued by a Naturalization Court.

[CGD 78–160, 47 FR 9379, Mar. 4, 1982, as amended by USCG–2006–24371, 74 FR 11212, Mar. 16, 2009; USCG–2013–0916, 78 FR 69296, Nov. 19, 2013]

§ 141.35 Records to be kept by the employer.

(a) The employer of personnel subject to this subpart shall maintain, and make available to the Coast Guard upon request, a record identifying which of the documents listed in §§ 141.25 and 141.30 were relied upon for each employee. The record must consist of either a copy of the document or the following information on the document:

(1) For a merchant mariner's document or a United States passport, the document's title and identification number.

(2) For a birth certificate or birth registration, the document's title and the employee's date and place of birth.

(3) For all other documents listed in §§ 141.25 and 141.30, the document's title and date and place of issuance.

(b) The employer of personnel subject to this subpart shall maintain a written list of the positions that make up the regular complement of the unit and the name and nationality of the individual filling each employee position.

This list may be in summary form and any simple format.

(Approved by the Office of Management and Budget under OMB control number 2130–0182)

[CGD 78–160, 47 FR 9379, Mar. 4, 1982, as amended by USCG–2006–24371, 74 FR 11212, Mar. 16, 2009; USCG–2013–0916, 78 FR 69296, Nov. 19, 2013]

PART 142—WORKPLACE SAFETY AND HEALTH

Subpart A—General

Sec.
142.1 Purpose.
142.4 Duties of lessees, permittees, and persons responsible for actual operations.
142.7 Reports of unsafe working conditions.

Subpart B—Personal Protective Equipment

142.21 Purpose and applicability.
142.24 Use of equipment.
142.27 Eye and face protection.
142.30 Head protection.
142.33 Foot protection.
142.36 Protective clothing.
142.39 Respiratory protection.
142.42 Safety belts and lifelines.
142.45 Personal flotation devices.
142.48 Eyewash equipment.

Subpart C—General Workplace Conditions

142.81 Purpose and applicability.
142.84 Housekeeping.
142.87 Guarding of deck openings.
142.90 Lockout and tagout.

AUTHORITY: 43 U.S.C 1333(d)(1), 1347(c), 1348(c); 49 CFR 1.46(z).

SOURCE: CGD 79–077, 51 FR 25059, July 10, 1986, unless otherwise noted.

Subpart A—General

§ 142.1 Purpose.

This part is intended to promote workplace safety and health by establishing requirements relating to personnel, workplace activities and conditions, and equipment on the Outer Continental Shelf (OCS).

§ 142.4 Duties of lessees, permittees, and persons responsible for actual operations.

(a) Each holder of a lease or permit under the Act shall ensure that all places of employment within the lease area or within the area covered by the permit on the OCS are maintained in compliance with workplace safety and health regulations of this part and, in addition, free from recognized hazards.

(b) Persons responsible for actual operations, including owners, operators, contractors, and subcontractors, shall ensure that those operations subject to their control are conducted in compliance with workplace safety and health regulations of this part and, in addition, free from recognized hazards.

(c) ''Recognized hazards'', in paragraphs (a) and (b) of this section, means conditions which are—

(1) Generally known among persons in the affected industry as causing or likely to cause death or serious physical harm to persons exposed to those conditions; and

(2) Routinely controlled in the affected industry.

§ 142.7 Reports of unsafe working conditions.

(a) Any person may report a possible violation of any regulation in this subchapter or any other hazardous or unsafe working condition on any unit engaged in OCS activities to an Officer in Charge, Marine Inspection.

(b) After reviewing the report and conducting any necessary investigation, the Officer in Charge, Marine Inspection, notifies the owner or operator of any deficiency or hazard and initiates enforcement measures as the circumstances warrant.

(c) The identity of any person making a report under paragraph (a) of this section is not made available, without the permission of the reporting person, to anyone other than those officers and employees of the Department of Transportation who have a need for the record in the performance of their official duties.

Subpart B—Personal Protective Equipment

§ 142.21 Purpose and applicability.

This subpart prescribes requirements concerning personal protection on OCS facilities.

§ 142.24 Use of equipment.

(a) Each holder of a lease or permit issued under the Act shall ensure that all personnel who are required by this

subpart to use or wear personal protective equipment do so when within the lease area or the area covered by the permit.

(b) Persons responsible for actual operations shall ensure that all personnel engaged in the operation properly use or wear the personal protective equipment specified by this subpart.

§ 142.27 Eye and face protection.

(a) Personnel engaged in or observing welding, grinding, machining, chipping, handling hazardous materials, or acetylene burning or cutting shall wear the eye and face protector specified for the operation in Figure 8 of ANSI Z87.1.

(b) Eye and face protectors must be maintained in good condition.

(c) Each eye and face protector must be marked with the information required by ANSI Z87.1 for that type of protector.

§ 142.30 Head protection.

(a) Personnel in areas where there is a hazard of falling objects or of contact with electrical conductors shall wear a head protector meeting the specifications of ANSI Z89.1, for the hazard involved.

(b) Each head protector must be marked with the information specified by ANSI Z89.1 for that type of protector and for the hazard involved.

§ 142.33 Foot protection.

(a) Personnel working in areas or engaged in activities where there is a reasonable probability for foot injury to occur shall wear footwear meeting the specifications of ANSI Z41, except when environmental conditions exist that present a hazard greater than that against which the footwear is designed to protect.

(b) Each pair of footwear must be marked with the information specified by ANSI Z41 for the type of footwear.

[CGD 79–077, 51 FR 25059, July 10, 1986, as amended at 51 FR 28381, Aug. 7, 1986]

§ 142.36 Protective clothing.

Personnel in areas where there are flying particles, molten metal, radiant energy, heavy dust, or hazardous materials shall wear clothing and gloves providing protection against the hazard involved.

§ 142.39 Respiratory protection.

(a) Personnel in an atmosphere specified under ANSI Z88.2, requiring the use of respiratory protection equipment shall wear the type of respiratory protection equipment specified in ANSI Z88.2 for that atmosphere.

(b) Before personnel enter an atmosphere specified under ANSI Z88.2 requiring the use of respiratory protection equipment, the persons listed in § 142.4 shall ensure that the personnel entering the atmosphere—

(1) Follow the procedures stated in section 6 of ANSI Z88.2 concerning the proper selection of a respirator and individual fit testing; and

(2) Are trained in the matters set forth in section 7 of ANSI Z88.2 concerning proper use of the equipment to be used and in the generally recognized short and long term harmful effects of exposure to the atmosphere involved.

(c) All respiratory protection equipment must be approved, used, and maintained in accordance with ANSI Z88.2.

[CGD 79–077, 51 FR 25059, July 10, 1986, as amended at 51 FR 28381, Aug. 7, 1986]

§ 142.42 Safety belts and lifelines.

(a) Except when moving from one location to another, personnel engaged in an activity where there is a hazard of falling 10 or more feet shall wear a safety belt or harness secured by a lanyard to a lifeline, drop line, or fixed anchorage.

(b) Each safety belt, harness, lanyard, lifeline, and drop line must meet the specifications of ANSI A10.14.

§ 142.45 Personal flotation devices.

Personnel, when working in a location such that, in the event of a fall, they would likely fall into water, shall wear a work vest that meets the requirements of 33 CFR 146.20 or a life preserver that meets the requirements of 46 CFR 160.002, 160.005, or 160.055, except when using the safety belts and lifelines required by § 142.42.

§ 142.48 Eyewash equipment.

Portable or fixed eyewash equipment providing emergency relief must be immediately available near the drill floor, mudrooms, and other areas where there is a reasonable probability that eye injury may occur.

[CGD 79–077, 51 FR 28381, Aug. 7, 1986]

Subpart C—General Workplace Conditions

§ 142.81 Purpose and applicability.

This subpart prescribes requirements relating to general working conditions on OCS facilities.

§ 142.84 Housekeeping.

All staging, platforms, and other working surfaces and all ramps, stairways, and other walkways must be kept clear of portable tools, materials, and equipment not in use and be promptly cleared of substances which create a tripping or slipping hazard. When engaged in an activity on the drill floor in which the spillage of drilling fluid is inevitable, such as when pulling wet strings of drill pipe, footwear and flooring designed to reduce slipping substantially may be used instead of keeping the drill floor free of drilling fluid during the activity.

[CGD 79–077, 51 FR 28381, Aug. 7, 1986]

§ 142.87 Guarding of deck openings.

Openings in decks accessible to personnel must be covered, guarded, or otherwise made inaccessible when not in use. The manner of blockage shall prevent a person's foot or body from inadvertently passing through the opening.

§ 142.90 Lockout and tagout.

(a) While repair or other work is being performed on equipment powered by an external source, that equipment must be locked out as required in paragraph (b) of this section or, if a lockout provision does not exist on the equipment, must be disconnected from the power source or otherwise deactivated, unless the nature of the work being performed necessitates that the power be connected or the equipment activated.

(b) If the equipment has a lockout or other device designed to prevent unintentional activation of the equipment, the lockout or other device must be engaged while the work is being performed on the equipment, unless the nature of the work being performed necessitates that the equipment be activated.

(c) A tag must be placed at the point where the equipment connects to a power source and at the location of the control panel activating the power, warning—

(1) That equipment is being worked on; and

(2) If the power source is disconnected or the equipment deactivated, that the power source must not be connected or the equipment activated.

(d) The tags must not be removed without the permission of either the person who placed the tags, that person's immediate supervisor, or their respective reliefs.

[CGD 79–077, 51 FR 25059, July 10, 1986; 51 FR 28382, Aug. 7, 1986]

PART 143—DESIGN AND EQUIPMENT

Subpart A—General

Sec.
143.1 Purpose.
143.15 Lights and warning devices.

Subpart B—OCS Facilities

143.100 Applicability.
143.101 Means of escape.
143.105 Personnel landings.
143.110 Guards and rails.
143.120 Floating OCS facilities.

Subpart C—Mobile Offshore Drilling Units

143.200 Applicability.
143.201 Existing MODUs exempted from new design requirements.
143.205 Requirements for U.S. and undocumented MODUs.
143.207 Requirements for foreign MODUs.
143.210 Letter of compliance.

Subpart D—Vessels

143.300 Applicability.
143.301 Load line requirements.

Subpart E—Standby Vessels

143.400 Applicability.

143.401 Vessel certification and operation.
143.405 Equipment.
143.407 Manning.

AUTHORITY: 43 U.S.C. 1333(d)(1), 1348(c), 1356; 49 CFR 1.46; section 143.210 is also issued under 14 U.S.C. 664 and 31 U.S.C. 9701.

SOURCE: CGD 78–160, 47 FR 9382, Mar. 4, 1982, unless otherwise noted.

Subpart A—General

§ 143.1 Purpose.

This part prescribes design and equipment requirements for units engaged in OCS activities.

§ 143.15 Lights and warning devices.

(a) OCS facilities must meet the lights and warning devices requirements under part 67 of this chapter concerning aids to navigation on artificial islands and fixed structures.

(b) Vessels, including attending vessels but excluding MODUs under paragraph (a) of this section, must meet the lights and warning devices requirements under the International Regulations for Preventing Collisions at Sea 1972 or under local rules provided for in Rule 1 of those Regulations.

[CGD 78–160, 47 FR 9382, Mar. 4, 1982, as amended by USCG–1998–3799, 63 FR 35530, June 30, 1998]

Subpart B—OCS Facilities

§ 143.100 Applicability.

This subpart applies to OCS facilities except mobile offshore drilling units.

§ 143.101 Means of escape.

(a) ''Primary means of escape'' shall be fixed stairways or fixed ladders of metal construction.

(b) ''Secondary means of escape'' shall be types approved for ''primary means of escape'' or portable, flexible ladders, knotted man ropes, and other devices satisfactory to the Officer in Charge, Marine Inspection.

(c) Manned OCS facilities shall be provided with at least two ''primary means of escape'' extending from the uppermost platform level that contains living quarters or that personnel occupy continuously, to each successively lower working level and to the water surface. Working levels without living quarters, shops, or offices in manned facility structural appendages, extensions, and installations that personnel occupy only occasionally shall be provided with one ''primary means of escape'' and, when necessary in the opinion of the Officer in Charge, Marine Inspection, one or more ''secondary means of escape.''

(d) Unmanned OCS facilities shall be provided with at least one ''primary means of escape'' extending from the uppermost platform working level to each successively lower working level and to the water surface. When personnel are on board, unmanned facilities shall also be provided with one or more ''secondary means of escape,'' but not more than one will be required for every 10 persons extending from the uppermost working level of the facility to each successively lower working level and to the water surface, excluding facility appendages and installations, unless ''secondary means of escape'' from such appendages and installations are necessary in the opinion of the Officer in Charge, Marine Inspection.

(e) ''Means of escape'' shall be suitably accessible to personnel for rapid facility evacuation.

(f) When two or more ''means of escape'' are installed, at least two shall be located as nearly diagonally opposite each other as practicable unless such requirement is unreasonable or impracticable in the opinion of the Officer in Charge, Marine Inspection.

§ 143.105 Personnel landings.

(a) Sufficient personnel landings shall be provided on each manned OCS facility to assure safe access and egress. When due to special construction personnel landings are not feasible, then suitable transfer facilities to provide safe access and egress shall be installed.

(b) The personnel landings shall be provided with satisfactory illumination. The minimum shall be one-foot candle of artificial illumination as measured at the landing floor and guards and rails.

§ 143.110 Guards and rails.

(a) Except for helicopter landing decks which are provided for in paragraph (b) of this section, and areas not

normally occupied, the unprotected perimeter of all floor or deck areas and openings shall be rimmed with guards and rails or wire mesh fence. The guard rail or fence shall be at least 42 inches high. The two intermediate rails shall be so placed that the rails are approximately evenly spaced between the guard rail and the floor or deck area: *Provided*, That if a toe board is installed then one of the intermediate rails may be omitted and the other rail placed approximately half way between the top of the toe board and the top guard rail.

(b) The unprotected perimeter of the helicopter landing deck shall be protected with a device of sufficient strength and size as to prevent any person from falling from such deck.

(c) Each catwalk and each stairway shall be provided with a suitable guard rail or rails, as necessary.

§ 143.120 Floating OCS facilities.

(a) Before construction is started on a proposed floating OCS facility, the owner or operator of the facility must submit to the Coast Guard for approval all plans and information listed in subpart C of 46 CFR part 107 which relate to the facility. All plans and information must be submitted according to the procedures in that subpart.

(b) The facility must comply with the requirements of subchapters F (Marine Engineering) and J (Electrical Engineering) of 46 CFR chapter I and 46 CFR part 108 (Design and Equipment). Where unusual design or equipment needs make compliance impracticable, alternative proposals that provide an equivalent level of safety may be accepted. These requirements do not apply to production systems on the facility.

(c) The Officer in Charge, Marine Inspection, determines whether a floating OCS facility meets the requirements of paragraph (b) of this section and issues a certificate of inspection for each facility which meets these requirements. Inspection of the facility may be required as part of this determination.

Subpart C—Mobile Offshore Drilling Units

§ 143.200 Applicability.

This subpart applies to mobile offshore drilling units when engaged in OCS activities.

§ 143.201 Existing MODUs exempted from new design requirements.

Any mobile offshore drilling unit built before, under construction on, or contracted for prior to April 5, 1982 is not required to meet the design requirements of this subpart until the unit is rebuilt. Until rebuilt, the unit must continue to comply with the design requirements applicable to the unit on April 4, 1982.

[CGD 78–160, 47 FR 11011, Mar. 15, 1982]

§ 143.205 Requirements for U.S. and undocumented MODUs.

Each mobile offshore drilling unit that is documented under the laws of the United States or not documented under the laws of any nation must comply with the design, equipment, and inspection requirements of 46 CFR parts 107 and 108 in order to engage in OCS activities.

§ 143.207 Requirements for foreign MODUs.

Each mobile offshore drilling unit that is documented under the laws of a foreign nation must, when engaged in OCS activities, comply with one of the following:

(a) The design and equipment standards of 46 CFR part 108.

(b) The design and equipment standards of the documenting nation if the standards provide a level of safety generally equivalent to or greater than that provided under 46 CFR part 108.

(c) The design and equipment standards for mobile offshore drilling units contained in the International Maritime Organization (IMO, formerly Inter-Governmental Maritime Consultative Organization or IMCO) (IMO) Code for Construction and Equipment of Mobile Offshore Drilling Units (IMO Assembly Resolution A.414(XI)) which has been incorporated by reference.

§ 143.210 Letter of compliance.

(a) The Officer in Charge, Marine Inspection, determines whether a mobile offshore drilling unit which does not hold a valid Coast Guard Certificate of Inspection meets the requirements of § 143.205 or § 143.207 relating to design and equipment standards and issues a letter of compliance for each unit which meets the requirements. Inspection of the unit may be required as part of this determination.

(b) A letter of compliance issued under paragraph (a) of this section is valid for one year or until the MODU departs the OCS for foreign operations, whichever comes first.

(c) The owner or operator of a foreign mobile offshore drilling unit requiring a letter of compliance examination must pay the fee prescribed in 46 CFR 2.10–130.

[CGD 84–098a, 53 FR 18981, May 26, 1988, as amended by CGD 91–030, 60 FR 13563, Mar. 13, 1995]

Subpart D—Vessels

§ 143.300 Applicability.

This subpart applies to all vessels engaged in OCS activities except mobile offshore drilling units.

§ 143.301 Load line requirements.

(a) Vessels, including foreign vessels, which would be subject to the requirements of subchapter E of 46 CFR chapter I concerning load lines when arriving at or proceeding to sea from any port or place within the United States must comply with those requirements when engaged in activities on the OCS.

(b) Load line certificates and load line exemption certificates issued or accepted under subchapter E of 46 CFR chapter I are accepted as evidence of compliance with paragraph (a) of this section.

Subpart E—Standby Vessels

SOURCE: CGD 84–098b, 54 FR 21571, May 18, 1989, unless otherwise noted.

§ 143.400 Applicability.

This subpart applies only to standby vessels meeting the requirements of this subpart and specifically designated in an Emergency Evacuation Plan (EEP) required by § 146.140 or § 146.210 of this chapter to provide rapid evacuation assistance in the event of an emergency.

§ 143.401 Vessel certification and operation.

Standby vessels must meet the following:

(a) Have a valid certificate of inspection issued in compliance with Subchapters H, I, or T of 46 CFR Chapter I.

(b) Be capable of carrying and providing shelter for 100 per cent of the number of persons on the most populated facility that the standby vessel is designated to assist. Crew spaces may be used to meet the requirements of this section.

(c) Provide bunks or aircraft type reclining seats for 10 per cent of the number of persons on the most populated facility that the standby vessel is designated to assist. Crew spaces may be used to meet the requirements of this section.

(d) Not carry or store goods, supplies, and equipment on the deck of the standby vessel or in other locations that may hinder the vessel's ability to render assistance to the facility that the vessel is designated to assist.

(e) Not carry or store any hazardous material.

§ 143.405 Equipment.

(a) Standby vessels must have, at least, the following equipment:

(1) Multiple propellers or propulsion devices.

(2) Two searchlights.

(3) For vessels certificated under Subchapter H of 46 CFR Chapter I, a line throwing appliance that meets the requirements in 46 CFR 75.45.

(4) For vessels certificated under subchapters I or T of 46 CFR chapter I, a line throwing appliance that meets the requirements of 46 CFR 94.45.

(5) A Stokes or comparable litter.

(6) One blanket for each person on the most populated facility that the standby vessel is designated to assist.

(7) Means for safely retrieving persons, including injured or helpless persons, from the water. The means of retrieval must be demonstrated to the

satisfaction of the Officer in Charge, Marine Inspection.

(8) A scramble net that can be rigged on either side of the standby vessel.

(9) A minimum of four Coast Guard approved ring life buoys, each equipped with 15 fathoms of line.

(10) An immersion suit approved by the Coast Guard under 46 CFR 160.171, or a buoyant suit meeting Supplement A of ANSI/UL–1123–1987 and approved under 46 CFR 160.053, for each member of the standby vessel's crew when the standby vessel operates north of 32 degrees north latitude in the Atlantic Ocean or north of 35 degrees north latitude in all other waters.

(11) Two boat hooks.

(12) A fire monitor with a minimum flow rate of, at least, 500 gallons per minute.

(13) One two-way radio capable of voice communications with the OCS facility, helicopters or other rescue aircraft, rescue boats, and shore side support personnel.

(14) Floodlights to illuminate the personnel and boat retrieval area, the scramble net when deployed, and the water around the personnel retrieval and scramble net deployment areas.

(15) A copy of ''The Ship's Medicine Chest and Medical Aid at Sea'', DHHS Publication No. (PHS) 84–2024, available from the Superintendent of Documents, U.S. Government Printing Office, Washington, DC 20402.

(16) An industrial first aid kit sized for 50 percent of the number of persons on the most populated facility that the standby vessel is designated to assist.

(17) Coast Guard approved life preservers for 50 percent of the number of persons on the most populated facility that the standby vessel is designated to assist.

(b) Equipment required by paragraph (a) of this section must be to the satisfaction of the Officer in Charge, Marine Inspection.

§ 143.407 Manning.

Standby vessels must be crewed in accordance with their certificate of inspection for 24 hour operation. The Officer in Charge, Marine Inspection, may require the crew to be augmented, as necessary, to provide for maneuvering the standby vessel, for lookouts, for rigging and operating retrieval equipment, and for caring for survivors.

PART 144—LIFESAVING APPLIANCES

Subpart 144.01—Manned Platforms

Sec.
144.01–1 Life floats.
144.01–5 Location and launching of life floats.
144.01–10 Equipment for life floats.
144.01–15 Alternates for life floats.
144.01–20 Life preservers.
144.01–25 Ring life buoys.
144.01–30 First-aid kit.
144.01–35 Litter.
144.01–40 Emergency communications equipment.

Subpart 144.10—Unmanned Platforms

144.10–1 Lifesaving equipment.
144.10–10 Other lifesaving equipment.

Subpart 144.20—Requirements for U.S. and Undocumented MODU's

144.20–1 Applicability.
144.20–5 Exposure suits.

Subpart 144.30—Requirements for Foreign MODU's

144.30–1 Applicability.
144.30–5 Exposure suits.

AUTHORITY: 43 U.S.C. 1333d; 46 U.S.C. 3102(a); 46 CFR 1.46.

Subpart 144.01—Manned Platforms

§ 144.01–1 Life floats.

Each manned platform shall be provided with at least two approved life floats. The life floats shall have sufficient capacity to accommodate all persons present at any one time.

[CGFR 56–4, 21 FR 903, Feb. 9, 1956]

§ 144.01–5 Location and launching of life floats.

The life floats shall be distributed in accessible locations and mounted on the outboard sides of the working platform in such a manner as to be readily launched.

[CGFR 56–4, 21 FR 903, Feb. 9, 1956]

§ 144.01–10 Equipment for life floats.

(a) Each lifefloat shall be provided with a painter. This painter shall be a manila rope not less than 2¾ inches in circumference and of a length not less than three times the distance from the deck where the lifefloat is stowed to the low water line. Alternatively, the painter may be of other material provided it has equal strength to the size of manila rope specified and is not less than ½ inch in diameter.

(b) Each life float must have a water light of an approved automatic electric type constructed in accordance with 46 CFR Subpart 161.010, except a water light constructed in accordance with former 46 CFR Subpart 161.001 that was installed before January 1, 1972, may be retained in an existing installation as long as it is maintained in good condition. The water light must be attached to the life float by a 12-thread manila or equivalent synthetic lanyard not less than 2 meters (6 feet) nor more than 4 meters (12 feet) in length. The water light must be mounted on a bracket so that when the life float is launched, the water light will pull free of the bracket.

(c) Two paddles shall be provided for each life float. The paddles shall not be less than five feet nor more than six feet long. The paddles shall be stowed in such a way that they will be readily accessible from either side of the life float when in the water.

[CGFR 56–4, 21 FR 903, Feb. 9, 1956]

EDITORIAL NOTE: For FEDERAL REGISTER citations affecting § 144.01–10, see the List of CFR Sections Affected, which appears in the Finding Aids section of the printed volume and at *www.fdsys.gov*.

§ 144.01–15 Alternates for life floats.

(a) Approved lifeboats, approved life rafts or approved inflatable life rafts may be used in lieu of approved life floats for either all or part of the capacity required. When either lifeboats or life rafts are used approved means of launching will be required. Inflatable life rafts, when used, shall be distributed and mounted as required for life floats under § 144.01–5.

(b) The equipment required for a lifeboat is a bailer, boat hook, bucket, hatchet, lantern, life line, two life preservers, matches, full complement of oars and steering oar, painter, plug, and rowlocks, of the same type, kind, and character as required for lifeboats carried on vessels engaged in navigating bays, sounds, and lakes other than the Great Lakes, and rivers.

(c) The equipment required for a life raft is a boat hook, life line (if not a Type A life raft), full complement of oars and steering oar, painter, and rowlocks of the same type, kind, and character as required for life rafts carried on cargo and miscellaneous vessels navigating on bays, sounds, and lakes other than the Great Lakes.

(d) Inflatable liferafts shall be approved by the Coast Guard under approval series 160.151. An approved ''Limited Service'' or ''Ocean Service'' liferaft installed on board a platform before May 9, 1997, may continue to be used to meet the requirements of this section provided it is maintained in good and serviceable condition.

[CGFR 56–4, 21 FR 903, Feb. 9, 1956, as amended by CGFR 60–35 25 FR 10132, Oct. 25, 1960; CGD 85–205, 62 FR 35392, July 1, 1997]

§ 144.01–20 Life preservers.

(a) An approved life preserver shall be provided for each person on a manned platform. The life preservers shall be located in easily accessible places.

(b) All kapok and fibrous glass life preservers which do not have plastic-covered pad inserts shall be removed from service.

(c) Each life preserver carried on a manned platform must have a personal flotation device light that is approved under Subpart 161.012 of 46 CFR Part 161. Each light must be securely attached to the front shoulder area of the life preserver.

(d) Each life preserver carried on a manned platform must have at least 200 sq. cm (31 sq. in.) of retroreflective material attached on its front side, at least 200 sq. cm on its back side, and at leat 200 sq. cm of material on each of its reversible sides. The material must be Type I material that is approved under 46 CFR 164.018. The material attached on each side of a life preserver must be divided equally between the upper quadrants of the side, and the

material in each quadrant must be attached as closely as possible to the shoulder area of the life preserver.

[CGFR 60–35, 25 FR 10132, Oct. 25, 1960, as amended by CGD 78–160, 47 FR 9383, Mar. 3, 1982; USCG–1998–3799, 63 FR 35530, June 30, 1998]

§ 144.01–25 Ring life buoys.

(a) Each manned platform must have at least four approved ring life buoys constructed in accordance with 46 CFR Subpart 160.050; except ring life buoys approved under former 46 CFR Subpart 160.009 may be used as long as they are in good and serviceable condition. One ring life buoy must be placed on a suitable rack on each side of a manned platform in an accessible place. The ring life buoy must always be capable of being cast loose and may not be permanently secured in any way.

(b) Each ring life buoy must have a water light of an approved automatic electric type constructed in accordance with 46 CFR Subpart 161.010. A water light constructed in accordance with former 46 CFR Subpart 161.001 that was installed before January 1, 1972 may be retained in an existing installation as long as it is maintained in good condition. The water light must be attached to the ring life buoy by a 12-thread manila or equivalent synthetic lanyard not less than 1 meter (3 feet) nor more than 2 meters (6 feet) in length. The water light must be mounted on a bracket near the ring life buoy so that when the ring life buoy is cast loose, the water light will pull free of the bracket.

[CGFR 56–4, 21 FR 903, Feb. 9, 1956, as amended by CGD 79–165b, 45 FR 65208, Oct. 2, 1980; CGD 80–155b. 47 FR 10533, Mar. 11, 1982]

§ 144.01–30 First-aid kit.

On each manned platform a first-aid kit approved by the Commandant or the U.S. Bureau of Mines shall be provided and kept in the custody of the person in charge.

[CGFR 56–4, 21 FR 903, Feb. 9, 1956, as amended by CGD 73–177R, 40 FR 8176, Feb. 26, 1975]

§ 144.01–35 Litter.

On each manned platform a Stokes litter, or other suitable safety litter capable of being safely hoisted with an injured person, shall be provided and kept in an accessible place.

[CGFR 68–154, 33 FR 18626, Dec. 17, 1968]

§ 144.01–40 Emergency communications equipment.

On manned platforms means of communication by radio and/or wire telephone shall be provided for contacting the shore or vessels in the vicinity for aid in the event of an emergency.

[CGFR 56–4, 21 FR 903, Feb. 9, 1956]

Subpart 144.10—Unmanned Platforms

§ 144.10–1 Lifesaving equipment.

(a) Except as allowed in paragraph (b) of this section, no person may be on an unmanned platform unless the following lifesaving equipment is readily accessible on the platform:

(1) A life preserver or a Type I—Personal flotation device, listed in Table 1, for each person.

TABLE 1—LIFE PRESERVERS AND EQUIVALENT PERFORMANCE FLOTATION DEVICES

Devices marked	Equivalent to performance type marked
160.002 Life preserver	Type I—Personal flotation device.
160.003 Life preserver	Type I—Personal flotation device.
160.004 Life preserver	Type I—Personal flotation device.
160.005 Life preserver	Type I—Personal flotation device.
160.055 Life preserver	Type I—Personal flotation device.

(2) An approved ring life buoy (Type IV PFD) for every two persons, but no more than four devices are required. Each ring life buoy must be of a type constructed in accordance with 46 CFR subpart 160.050; except a ring life buoy that was approved under former 46 CFR subpart 160.009 may be used as long as it is in good and serviceable condition.

(3) Each ring life buoy under paragraph (a)(2) of this section must have an approved automatic electric water light that is attached as described in § 144.01–25(b).

(b) The ring life buoys required in paragraph (a)(2) of this section may be kept on a manned vessel that remains alongside the platform if there is no

available space to keep them on the platform.

[CGD 73–177R, 40 FR 8176, Feb. 26, 1975, as amended by CGD 80–155b, 47 FR 10533, Mar. 11, 1982]

§ 144.10–10 Other lifesaving equipment.

Any lifesaving equipment on an unmanned platform that is not required in § 144.10–1 must meet the standards contained in Subpart 144.01 of this part.

[CGD 73–177R, 40 FR 8176, Feb. 26, 1975]

Subpart 144.20—Requirements for U.S. and Undocumented MODU's

AUTHORITY: Sec. 4, 67 Stat. 462 (43 U.S.C. 1333) as amended; 49 CFR 1.46(z).

§ 144.20–1 Applicability.

This subpart applies to each MODU operating on the OCS that is not inspected under 46 CFR subchapter I-A.

[CGD 82–075b, 49 FR 4377, Feb. 6, 1984]

§ 144.20–5 Exposure suits.

This section applies to each MODU except those operating south of 32 degrees North latitude in the Atlantic Ocean or south of 35 degrees North latitude in all other waters.

(a) Each MODU must carry an exposure suit for each person on board. The exposure suit must be stowed in a readily accessible location in or near the berthing area of the person for whom the exposure suit is provided.

(b) In addition to the exposure suits required by paragraph (a) of this section, each watch station and work station must have enough exposure suits to equal the number of persons normally on watch in, or assigned to, the station at one time. However, an exposure suit need not be provided at a watch or work station for a person whose cabin, stateroom, or berthing area (and the exposure suits stowed in that location) is readily accessible to the station.

(c) Each exposure suit on a MODU must be of a type approved under 46 CFR 160.171.

(d) Each exposure suit must have a personal flotation device light that is approved under 46 CFR 161.012. Each light must be securely attached to the front shoulder area of the exposure suit.

(e) Each exposure suit on a MODU must be provided with a whistle of the ball type or multi-tone type, of corrosion resistant construction, and in good working order. The whistle must be attached to the exposure suit by a lanyard without hooks, snaps, clips, etc., that is long enough to permit the whistle to reach the mouth of the wearer. If the lanyard allows the whistle to hang below the waist of the wearer, the whistle must be stowed in a pocket on the exposure suit, or with the lanyard coiled and stopped off.

(f) No stowage container for exposure suits may be capable of being locked.

[CGD 82–075b, 49 FR 4377, Feb. 6, 1984, as amended by CGD 84–090, 50 FR 3904, Jan. 29, 1985; USCG–2000–7223, 65 FR 40057, June 29, 2000]

Subpart 144.30—Requirements for Foreign MODU's

AUTHORITY: Sec. 4, 67 Stat. 462 (43 U.S.C. 1333) as amended; 49 CFR 1.46(z).

§ 144.30–1 Applicability.

This subpart applies to each MODU engaged in OCS activities that is documented under the laws of a foreign nation.

[CGD 82–075b, 49 FR 4377, Feb. 6, 1984]

§ 144.30–5 Exposure suits.

Each foreign MODU must meet the requirements of § 144.20–5 of this chapter, except as follows:

(a) Exposure suits (immersion suits, survival suits, etc.) approved by the nation under which the MODU is documented may be used in lieu of suits approved under 46 CFR 160.071, provided that they are accepted by the Commandant as providing equivalent thermal protection to the wearer. (Requests for acceptance of such suits should be sent to Commandant, U.S. Coast Guard, (CG–521), 2100 2nd St. SW., Stop 7126, Washington, DC 20593–7126, along with technical data supporting the thermal performance of the suits.)

(b) Personal flotation device lights approved by the nation under which the MODU is documented may be used

in lieu of lights approved under 46 CFR 161.012.

[CGD 82–075b, 49 FR 4377, Feb. 6, 1984, as amended by CGD 88–052, 53 FR 25121, July 1, 1988; CGD 96–026, 61 FR 33665, June 28, 1996; USCG–2010–0351, 75 FR 36283, June 25, 2010]

PART 145—FIRE-FIGHTING EQUIPMENT

Sec.
145.01 Portable and semi-portable fire extinguishers.
145.05 Classification of fire extinguishers.
145.10 Locations and number of fire extinguishers required.

AUTHORITY: Sec. 633, 63 Stat. 545; sec. 4, 67 Stat. 462; 14 U.S.C. 633; 43 U.S.C. 1333.

§ 145.01 Portable and semi-portable fire extinguishers.

On all manned platforms and on all unmanned platforms where crews are continuously working on a 24-hour basis, approved type portable fire extinguishers and/or approved type semi-portable fire extinguishers shall be installed and maintained. On all unmanned platforms where crews are not continuously working on a 24-hour basis, approved type portable fire extinguishers and/or approved type semi-portable fire extinguishers are required to be installed and maintained only when crews are working thereon.

[CGFR 56–4, 21 FR 903, Feb. 9, 1956]

§ 145.05 Classification of fire extinguishers.

(a) Portable and semi-portable extinguishers shall be classified by a combination letter and number symbol. The letter indicating the type of fire which the unit could be expected to extinguish, and the number indicating the relative size of the unit.

(b) The types of fire will be designated as follows:

(1) ''A'' for fires in ordinary combustible materials where the quenching and cooling effects of quantities of water, or solutions containing large percentages of water, are of first importance.

(2) ''B'' for fires in flammable liquids, greases, etc., where a blanketing effect is essential.

(3) ''C'' for fires in electrical equipment where the use of a non-conducting extinguishing agent is of first importance.

(c) The number designations for size will start with ''I'' for the smallest to ''V'' for the largest. Sizes I and II are considered portable extinguishers. Sizes III, IV and V are considered semi-portable extinguishers which shall be fitted with suitable hose and nozzle or other practicable means so that all portions of the space concerned may be covered. Examples of size graduations for some of the typical portable and semi-portable extinguishers are set forth in Table 145.05(c).

TABLE 145.05(c)—PORTABLE AND SEMIPORTABLE EXTINGUISHERS

Classification		Soda-acid and water, gallons	Foam, gallons	Carbon dioxide, pounds	Dry chemical, pounds
Type	Size				
A	II	2½	2½		
B	II		2½	15	10
C	II			15	10
B	V		40	100	50

(d) All portable and semi-portable extinguishers shall have permanently attached thereto a durable name plate giving the name of the item, the rated capacity in gallons or pounds, the name and address of the person or firm for whom approved, and the identifying mark of the actual manufacturer.

[CGFR 56–4, 21 FR 903, Feb. 9, 1956, as amended by CGFR 58–28, 23 FR 6880, Sept. 6, 1958]

§ 145.10 Locations and number of fire extinguishers required.

(a) Approved portable and semi-portable extinguishers shall be installed in accordance with Table 145.10(a).

(b) Semi-portable extinguishers shall be located in the open so as to be readily seen.

TABLE 145.10(a)—PORTABLE AND SEMI-PORTABLE EXTINGUISHERS

Space	Classification	Quantity and location
SAFETY AREAS		
Communicating corridors	A-II	1 in each main corridor not more than 150 feet apart. (May be located in stairways.)
Radio room	C-II	1 in vicinity of exit.
ACCOMMODATIONS		
Sleeping accommodations	A-II	1 in each sleeping accommodation space. (Where occupied by more than 4 persons.)
SERVICES SPACES		
Galleys	B-II or C-II	1 for each 2,500 square feet or fraction thereof for hazards involved.
Storerooms	A-II	1 for each 2,500 square feet or fraction thereof located in vicinity of exits, either inside or outside of spaces.
MACHINERY SPACES		
Gas-fired boilers	B-II (CO_2 or dry chemical).	2 required.
Gas-fired boilers	B-V	1 required.[1]
Oil-fired boilers	B-II	2 required.
Oil-fired boilers	B-V	2 required.[1]
Internal combustion or gas turbine engines	B-II	1 for each engine.[2]
Electric motors or generators of open type	C-II	1 for each 2 motors or generators.[3]

[1] Not required where a fixed carbon dioxide system is installed.
[2] When installation is on weather deck or open to atmosphere at all times 1 B-II for each three engines is allowable.
[3] Small electrical appliances, such as fans, etc., shall not be counted or used as basis for determining number of extinguishers required.

[CGFR 56–4, 21 FR 903, Feb. 9, 1956]

PART 146—OPERATIONS

Subpart A—OCS Facilities

Sec.
146.1 Applicability.
146.5 Person in charge.
146.10 Notice of new facilities.
146.15 Maintenance of emergency equipment.
146.20 Work vests.
146.30 Notice of casualties.
146.35 Written report of casualty.
146.40 Diving casualties.
146.45 Pollution incidents.

Subpart B—Manned OCS Facilities

146.101 Applicability.
146.102 Definitions.
146.103 Safety and Security notice of arrival for U.S. floating facilities.
146.104 Safety and Security notice of arrival for foreign floating facilities.
146.105 General alarm system.
146.110 Emergency signals.
146.115 Duties of personnel during an emergency.
146.120 Manning of survival craft.
146.125 Emergency drills.
146.130 Station bill.
146.135 Markings for emergency equipment.
146.140 Emergency Evacuation Plan.

Subpart C—Mobile Offshore Drilling Units

146.200 Definitions.
146.201 Applicability.
146.202 Notice of arrival or relocation of MODUs on the OCS.
146.203 Requirements for U.S. and undocumented MODUs.
146.205 Requirements for foreign MODUs.
146.210 Emergency Evacuation Plan.
146.215 Safety and Security notice of arrival for U.S. or foreign MODUs.

Subpart D—Vessels—Notice of Casualty

146.301 Applicability.
146.303 Notice and written report of casualties.

Subpart E—Vessels—Safety and Security Notice of Arrival

146.401 Applicability.
146.402 Definitions.
146.405 Safety and Security notice of arrival for vessels arriving at a place on the OCS.

AUTHORITY: 33 U.S.C. 1223, 1226; 43 U.S.C. 1333, 1348, 1350, 1356; Sec. 109, Pub. L. No. 109–347, 120 Stat. 1884; Department of Homeland Security Delegation No. 0170.1.

SOURCE: CGD 78–160, 47 FR 9383, Mar. 4, 1982, unless otherwise noted.

Subpart A—OCS Facilities

§ 146.1 Applicability.

The provisions of this subpart apply to OCS facilities except mobile offshore drilling units.

§ 146.5 Person in charge.

(a) The owner or operator, or the agent of either of them, shall designate by title and in order of succession the persons on each OCS facility who shall be the ''person in charge.''

(b) In case an emergency arises, nothing in the regulations in this subchapter shall be so construed as preventing the person in charge from pursuing the most effective action in that person's judgement for rectifying the conditions causing the emergency.

§ 146.10 Notice of new facilities.

(a) The owner or operator of each OCS facility not in operation before April 5, 1982 shall, at least 30 days before the date on-site construction of the facility is expected to commence, notify the District Commander for the area in which the facility will be located of:

(1) The position in which the facility will be operated;

(2) The designation assigned to the facility for identification under 30 CFR 250.37;

(3) The date when operation of the facility is expected to commence; and

(4) The date when the facility is expected to be available for inspection by the Coast Guard.

(b) The information required in paragraph (a) of this section may be submitted together with a need not repeat information submitted in connection with the application and notice requirements in 33 CFR part 67 for aids to navigation on the Outer Continental Shelf.

§ 146.15 Maintenance of emergency equipment.

(a) The emergency equipment provided, regardless of whether or not required by this subchapter, shall be maintained in good condition at all times. Good operating practices require replacement of expended equipment, as well as periodic renewal of those items which have a limited period of effectiveness.

(b) Each personal flotation device light that has a non-replaceable power source must be replaced on or before the expiration date of the power source.

(c) Each replaceable power source for a personal flotation device light must be replaced on or before its expiration date and the light must be replaced when it is no longer serviceable.

§ 146.20 Work vests.

(a) *Types of approved work vests.* Each buoyant work vest carried under the permissive authority of this section must be approved under—

(1) 46 CFR 160.053; or

(2) 46 CFR 160.077 as a commercial hybrid PFD.

(b) *Use.* Approved buoyant work vests are considered to be items of safety apparel and may be carried aboard OCS facilities to be worn by persons employed thereon when working near or over the water. The use and control of such vests shall be under the supervision of the person in charge of the facility. When carried, such vests shall not be accepted in lieu of any portion of the required number of approved life preservers and shall not be substituted for the approved life preservers required to be worn during drills and emergencies.

(c) *Stowage.* The work vests shall be stowed separately from the regular stowage of approved life preservers. The location for the stowage of work vests shall be such as not to be easily confused with that for approved life preservers.

(d) *Inspections.* Each work vest shall be subject to examination by a marine inspector to determine its serviceability. If found to be satisfactory, it may be continued in service, but shall not be stamped by a marine inspector with a Coast Guard stamp. If a work vest is found not to be in a serviceable condition, then such work vest shall be removed from the OCS facility. If a work vest is beyond repair, it shall be destroyed or mutilated in the presence of a marine inspector so as to prevent its continued use as a work vest.

(e) *Additional requirements for hybrid work vests.* Commercial hybrid PFD's

must, in addition to the other requirements in this section, be—

(1) Used, stowed, and maintained in accordance with—

(i) The procedures set out in the manual required for these devices by 46 CFR 160.077–29; and

(ii) Any limitation(s) marked on them; and

(2) Of the same or similar design and have the same method of operation as each other hybrid PFD carried on board.

[CGD 78–160, 47 FR 9383, Mar. 4, 1982, as amended by CGD 78–174A, 51 FR 4339, Feb. 4, 1986]

§ 146.30 Notice of casualties.

(a) The owner, operator, and person in charge of an OCS facility shall ensure that the Coast Guard is notified as soon as possible after a casualty occurs, and by the most rapid means available, of each casualty involving the facility which results in:

(1) Death; or

(2) Injury to 5 or more persons in a single incident.

(b) The owner, operator, and person in charge shall ensure that the Coast Guard is notified promptly of each casualty involving the facility which results in:

(1) Damage affecting the usefulness of primary lifesaving or firefighting equipment;

(2) Injury causing any person to be incapacitated for more than 72 hours;

(3) Damage to the facility exceeding $25,000 resulting from a collision by a vessel with the facility; or

(4) Damage to a floating OCS facility exceeding $25,000.

(c) The notice required by paragraphs (a) and (b) of this section must identify the person giving the notice and the facility involved and describe, insofar as practicable, the nature of the casualty and the extent of injury to personnel and damage to property.

(d) Damage costs referred to in paragraphs (b)(3) and (b)(4) of this section include the cost of labor and material to restore the facility to the service condition which existed prior to the casualty, but does not include the cost of salvage, cleaning, gas freeing, drydocking or demurrage of the facility.

(Approved by the Office of Management and Budget under control number 1625–0001)

[CGD 78–160, 47 FR 9383, Mar. 4, 1982, as amended by CGD 82–069, 50 FR 14216, Apr. 11, 1985; USCG–2006–25150, 71 FR 39209, July 12, 2006]

§ 146.35 Written report of casualty.

(a) In addition to the notice of a casualty required by § 146.30, the owner, operator, or person in charge shall, within 10 days of the casualty, submit to the Officer in Charge, Marine Inspection, a written report which:

(1) Identifies the facility involved, its owner, operator, and person in charge;

(2) Describes the casualty, including the date and time;

(3) Describes the nature and extent of injury to personnel and damage to property;

(4) Describes the factors which may have contributed to causing the casualty;

(5) Gives the name, address, and phone number of persons involved in or witnessing the casualty; and

(6) Gives any desired comments, especially with respect to use of or need for emergency equipment.

(7) Includes information relating to alcohol or drug involvement as specified in the vessel casualty reporting requirements of 46 CFR 4.05–12.

(b) The written report required by paragraph (a) of this section may be—

(1) In narrative form if all appropriate parts of Form CG–2692 are addressed;

(2) On Form CG–2692 for casualties resulting in property damage, personnel injury, or loss of life.

(c) If filed or postmarked within 5 days of the casualty, the written report required by paragraph (a) of this section serves as the notice required by § 146.30(b).

(Approved by the Office of Management and Budget under control number 1625–0001)

[CGD 78–160, 47 FR 9383, Mar. 4, 1982, as amended by CGD 82–023a, 47 FR 35741, Aug. 16, 1982; CGD 82–023a, 48 FR 43174, Sept. 22, 1983; CGD 84–099, 52 FR 47533, Dec. 14, 1987; USCG–2006–25150, 71 FR 39209, July 12, 2006]

§ 146.40 Diving casualties.

Diving related casualties are reported in accordance with 46 CFR 197.484 and 197.486.

§ 146.45 Pollution incidents.

Oil pollution incidents involving an OCS facility are reported in accordance with §§ 135.305 and 135.307 of this chapter. Additional provisions concerning liability and compensation because of oil pollution are contained in Subchapter M of this chapter.

Subpart B—Manned OCS Facilities

§ 146.101 Applicability.

The provisions of this subpart apply only to manned OCS facilities except mobile offshore drilling units.

§ 146.102 Definitions.

For the purpose of this subpart:

Arrives on the OCS means when a floating facility enters any OCS block area for the purpose of engaging in operations subject to the jurisdiction of the OCS Lands Act.

OCS block area means the names given by the Bureau of Ocean Energy Management, (BOEM) to define the OCS areas used to facilitate management or leasing on the OCS.

U.S., as used in the term, ''U.S. floating facility,'' means a ''floating facility,'' that is registered, documented, or certificated under the laws of the United States or that is not registered, documented, or certificated under the laws of the United States or any other nation.

[USCG–2008–1088, 76 FR 2260, Jan. 13, 2011, as amended by USCG–2013–0797, 79 FR 36405, June 27, 2014]

§ 146.103 Safety and Security notice of arrival for U.S. floating facilities.

(a) *General.* At least 96 hours before a U.S. floating facility arrives on the OCS from a foreign port or place or from a different OCS block area, excluding those U.S. floating facilities arriving directly from a U.S. port or place, to engage in OCS activities, the owner or operator of the floating facility, except as provided in paragraph (f) of this section, must submit the following information to the National Vessel Movement Center (NVMC):

(1) The location, latitude and longitude, of the floating facility at the time the notice of arrival (NOA) is reported;

(2) The area designation, block number or lease number, assigned under 30 CFR 250.154 for identification, where the owner or operator of the floating facility plans to perform OCS activities;

(3) The floating facility's name, if any;

(4) The date when OCS operations of the floating facility are expected to begin and end;

(5) Names of the last two ports or places visited and the associated dates of arrival and departure;

(6) The following information for each individual onboard:

(i) Full name;

(ii) Date of birth;

(iii) Nationality;

(iv) Passport number or marine documentation number (type of identification and number);

(v) Position or duties on the floating facility; and

(vi) Name of the port, or place, and country where the individual embarked.

(b) *Methods of submission.* The notice must be submitted to the NVMC by electronic Notice of Arrival and Departure format using methods specified in the NVMC's Web site at *http://www.nvmc.uscg.gov/.*

(c) *Updates to a submitted NOA.* Unless otherwise specified in this section, whenever the most recently submitted NOA information becomes inaccurate, the owner or operator of a U.S. floating facility must revise and re-submit the NOA within the times required in paragraph (e) of this section. An owner or operator does not need to revise or re-submit an NOA for the following:

(1) A change in submitted arrival time that is less than 6 hours;

(2) Changes in the location, latitude and longitude, of the floating facility from the location at the time the NOA was reported; or

(3) Changes to personnel positions or duties on the floating facility.

(d) *Required reporting time of an initial NOA.* The owner or operator of a U.S.

floating facility subject to this section must submit an initial NOA:

(1) If the voyage time is more than 96 hours, owners or operators of a floating facility must submit an initial NOA at least 96 hours before the U.S. floating facility arrives at the OCS location where the owner or operator plans to perform OCS activities; or

(2) If the voyage time is less than 96 hours, owners and operators of a floating facility must submit an initial NOA at least 24 hours before the U.S. floating facility arrives at the OCS location where the owner or operator plans to perform OCS activities.

(e) *Required reporting time of an update to an NOA.* The owner or operator of each floating facility subject to this section must submit an NOA update:

(1) If the most recently submitted NOA, or NOA update, differs by 24 hours or more from the current estimated time of arrival, the owner or operator of the floating facility must provide an updated NOA as soon as practicable but at least 24 hours before the U.S. floating facility arrives at the OCS location where the owner or operator plans to perform OCS activities; or

(2) If the most recently submitted NOA, or NOA update, differs by less than 24 hours from the current estimated time of arrival, the owner or operator of the floating facility must provide an update as soon as practicable but at least 12 hours before the U.S. floating facility arrives at the OCS location where the owner or operator plans to perform OCS activities.

(f) *Towing vessels.* When a towing vessel controls a U.S. floating facility required to submit an NOA under this subpart, the owner or operator of the towing vessel, or lead towing vessel if there is more than one, is responsible for submitting only one NOA containing the NOA information items required for the towing vessels, under § 146.405, and the U.S. floating facility under paragraph (a) of this section.

(g) This section does not apply to U.S. floating facilities merely transiting the waters superjacent to the OCS and not engaged in OCS activities.

[USCG–2008–1088, 76 FR 2260, Jan. 13, 2011]

§ 146.104 Safety and Security notice of arrival for foreign floating facilities.

(a) *General.* At least 96 hours before a foreign floating facility arrives on the OCS from a foreign port or place or from a different OCS block area to engage in OCS activities, the owner or operator of the floating facility, except as provided in paragraph (f) of this section, must submit the following information to the National Vessel Movement Center (NVMC):

(1) The location, latitude and longitude, of the foreign floating facility at the time the NOA is reported;

(2) The area designation, block number or lease number, assigned under 30 CFR 250.154 for identification, where the owner or operator of the foreign floating facility plans to perform OCS activities;

(3) The foreign floating facility's name, if any;

(4) The date when OCS operations of the foreign floating facility are expected to begin and end;

(5) Names of the last two ports or places visited and the associated dates of arrival and departure;

(6) The following information for each individual onboard:

(i) Full name;

(ii) Date of birth;

(iii) Nationality;

(iv) Passport number or marine documentation number (type of identification and number);

(v) Position or duties on the foreign floating facility; and

(vi) Name of the port, or place, and country where the individual embarked.

(7) The date of issuance of the foreign floating facility's International Safety Management certificate (ISM), if any, and Document of Compliance certificate and the name of the flag administration, or its recognized representative, that issued those certificates; and

(8) The date of issuance of the foreign floating facility's International Ship Security certificate (ISSC), if any, and the name of the flag administration, or the recognized security organization representing the flag administration, that issued the ISSC.

(b) *Methods of submission*. The notice must be submitted to the National Vessel Movement Center by electronic Notice of Arrival and Departure format using methods specified at the NVMC's Web site at *http://www.nvmc.uscg.gov/*.

(c) *Updates to a submitted NOA*. Unless otherwise specified in this section, whenever the most recently submitted NOA information becomes inaccurate, the owner or operator of the foreign floating facility must revise and resubmit the NOA within the times required in paragraph (e) of this section. An owner or operator does not need to revise or re-submit an NOA for the following:

(1) A change in submitted arrival time that is less than 6 hours;

(2) Changes in the location, latitude and longitude, of the floating facility from the location at the time the NOA was reported; or

(3) Changes to personnel positions or duties on the foreign floating facility.

(d) *Required reporting time of an initial NOA*. The owner or operator of a foreign floating facility subject to this section must submit an initial NOA:

(1) If the voyage time is more than 96 hours, owners or operators of a foreign floating facility must submit an initial NOA at least 96 hours before the foreign floating facility arrives at the OCS location where the owner or operator plans to perform OCS activities; or

(2) If the voyage time is less than 96 hours, the owner or operator of a foreign floating facility must submit an initial NOA at least 24 hours before the foreign floating facility arrives at the OCS location where the owner or operator plans to perform OCS activities.

(e) *Required reporting time of an update to an NOA*. The owner or operator of a foreign floating facility subject to this section must submit an NOA update:

(1) If the most recently submitted NOA, or NOA update, differs by 24 hours or more from the current estimated time of arrival, the owner or operator of the foreign floating facility must provide an updated NOA as soon as practicable but at least 24 hours before the floating facility arrives at the OCS location where the owner or operator plans to perform OCS activities; or

(2) If the most recently submitted NOA, or NOA update, differs by less than 24 hours from the current estimated time of arrival, the owner or operator of the foreign floating facility must provide an updated NOA as soon as practicable but at least 12 hours before the floating facility arrives at the OCS location where owners or operators plan to perform OCS activities.

(f) *Towing vessels*. When a towing vessel controls a foreign floating facility required to submit an NOA under this subpart, the owner or operator of the towing vessel, or lead towing vessel if there is more than one, is responsible for submitting only one NOA containing the NOA information items required for towing vessels, under § 146.405, and the foreign floating facility under paragraph (a) of this section.

(g) This section does not apply to a foreign floating facility merely transiting the waters superjacent to the OCS and not engaged in OCS activities.

[USCG–2008–1088, 76 FR 2261, Jan. 13, 2011]

§ 146.105 General alarm system.

Each manned facility must have a general alarm system. When operated, this system shall be audible in all parts of the structure on which provided.

§ 146.110 Emergency signals.

(a) The owner, the owner's agent, or the person in charge shall establish emergency signals to be used for calling the personnel to their emergency stations.

(b) The signal to man emergency stations shall be an intermittent signal on the general alarm system for not less than 10 seconds. The abandon facility signal shall be a continuous signal on the general alarm system.

§ 146.115 Duties of personnel during an emergency.

(a) The owner, the owner's agent, or the person in charge shall assign to each person on a manned facility special duties and duty stations so that in event an emergency arises confusion will be minimized and no delay will occur with respect to the use or application of equipment required by this subchapter. The duties shall, as far as

possible, be comparable with the regular work of the individual.

(b) The duties shall be assigned as necessary for the proper handling of any emergency, and shall include the following:

(1) The closing of air ports, watertight doors, scuppers, and sanitary and other discharges which lead through the facility's hull.

(2) The stopping of fans and ventilation systems.

(3) The donning of life preserves.

(4) The preparation and launching of life floats, lifeboats, or life rafts.

§ 146.120 Manning of survival craft.

The owner, the owner's agent, or the person in charge shall assign a person to each life float, lifeboat, life raft, or survival capsule who shall be responsible for launching it in event of an emergency.

§ 146.125 Emergency drills.

(a) Emergency drills shall be conducted at least once each month by the person in charge of the manned facility. The drill shall be conducted as if an actual emergency existed. All personnel should report to their respective stations and be prepared to perform the duties assigned to them.

(b) The person in charge and conducting the emergency drill shall instruct the personnel as necessary to insure that all persons are familiar with their duties and stations.

(c) *Emergency evacuation drills.* The following emergency evacuation drills must be conducted:

(1) At least once a year, all the elements of the Emergency Evacuation Plan (EEP) under § 146.140 relating to the evacuation of personnel from the facility must be exercised through a drill or a series of drills. The drill(s) must exercise all of the means and procedures listed in the EEP for each circumstance and condition described in the EEP under § 146.140(d)(9).

(2) At least once a month, a drill must be conducted that demonstrates the ability of the facility's personnel to perform their duties and functions on the facility, as those duties and functions are described in the EEP. If a standby vessel is designated for that facility in the EEP, the vessel must be positioned as described in the EEP for an evacuation of that facility and the vessel's crew must demonstrate its ability to perform its duties and functions under the EEP.

(d) The date and time of such drills shall be reported in writing by the person in charge at the time of the drill to the owner who shall maintain this report record for a year and furnish it upon request to the Coast Guard. After one year, such records may be destroyed. When it is impossible to conduct emergency drills as required by this section during a particular calendar month, during the following month, a written report by the owner shall be submitted to the Officer in Charge, Marine Inspection, stating why the drills could not be conducted.

(Approved by the Office of Management and Budget under control number 1625–0018)

[CGD 78–160, 47 FR 9383, Mar. 4, 1982, as amended by CGD 84–098b, 54 FR 21572, May 18, 1989; USCG–2006–25150, 71 FR 39209, July 12, 2006]

§ 146.130 Station bill.

(a) The person in charge of each manned platform shall be responsible for and have prepared a station bill (muster list). This station bill must be signed by the person in charge. Copies shall be duly posted in conspicuous locations on the manned platform.

(b) The station bill shall set forth the special duties and duty stations of each member of the personnel for any emergency which involves the use or application of equipment required by this subchapter. In addition, it shall contain all other duties assigned and considered as necessary for the proper handling of other emergencies.

(c) The station bill shall contain the various signals to be used for calling the personnel to their emergency stations, and to abandon the facility.

(Approved by the Office of Management and Budget under OMB control number 2115–0542)

[CGD 78–160, 47 FR 9383, Mar. 4, 1982, as amended by CGD 86–011, 51 FR 5712, Feb. 18, 1986]

§ 146.135 Markings for emergency equipment.

(a) Markings shall be provided as considered necessary for the guidance of persons on manned facilities.

(b) The general alarm bell switches shall be identified by red letters at least one inch high with a contrasting background: ''General Alarm.''

(c) All general alarm bells shall be identified by a sign at each bell in red letters at least one inch high with a sharp contrasting background: ''General Alarm—When Bell Rings Go to Your Station.

(d) All life floats, lifeboats, life rafts, and survival capsules, together with paddles or oars, shall be conspicuously marked with a name or number of, or other inscription identifying, the facility on which placed. The number of persons allowed on each life float, lifeboat, or life raft shall be conspicuously marked thereon in letters and numbers 1½ inches high. These numbers shall be placed on both sides of the life float, lifeboat, or life raft. Inflatable life rafts shall be marked in accordance with Subpart 160.051 of 46 CFR Part 160 and no additional markings are required.

(e) All life preservers and ring life buoys shall be marked with the name or number of, or other inscription identifying, the facility on which placed except those which accompany mobile crews to unmanned platforms may be marked with the operator's name and field designation.

§ 146.140 Emergency Evacuation Plan.

(a) The operator of each manned OCS facility shall develop an Emergency Evacuation Plan (EEP) for the facility which addresses all of the items listed in paragraph (d) of this section. The EEP may apply to more than one facility, if the facilities are located in the same general geographic location and within the same Coast Guard Officer in Charge, Marine Inspection (OCMI) zone; if each facility covered by the EEP is specifically identified in the EEP; and if the evacuation needs of each facility are accommodated. The EEP must be submitted to the OCMI having jurisdiction over the facility, 30 days before placing the facility in operation. The OCMI reviews the EEP to determine whether all items listed in paragraph (d) of this section are addressed for each facility included in the EEP. If the OCMI determines that all items in paragraph (d) of this section are addressed, the OCMI stamps the EEP ''APPROVED'' and returns it, together with a letter indicating Coast Guard approval, to the operator. If the OCMI determines that any item is not addressed, the OCMI stamps the EEP ''RETURNED FOR REVISION'' and returns the EEP, together with an explanation of the EEP's deficiencies, to the operator.

(b) Once the EEP is approved under paragraph (a) of this section, the facility operator shall ensure that a copy of the EEP and the letter indicating Coast Guard approval is maintained on the facility.

(c) The EEP must be resubmitted for approval when substantive changes are made to the EEP. Only the pages affected by a change need be resubmitted if the EEP is bound in such a way as to allow old pages to be removed easily and new ones inserted. Substantive changes include, but are not limited to, installation of a new facility within the area covered by an EEP, relocation of a MODU, changes in the means or methods of evacuation, or changes in the time required to accomplish evacuation.

(d) The EEP must, at a minimum,

(1) Be written in language that is easily understood by the facility's operating personnel;

(2) Have a table of contents and general index;

(3) Have a record of changes;

(4) List the name, telephone number, and function of each person to be contacted under the EEP and state the circumstances in which that person should be contacted;

(5) List the facility's communications equipment, its available frequencies, and the communications schedules with shore installations, standby vessels, rescue aircraft, and other OCS facilities specified in the EEP;

(6) Identify the primary source of weather forecasting relied upon in implementing the EEP and state the frequency of reports when normal weather is forecasted, the frequency of reports

when heavy weather is forecasted, and the method of transmitting the reports to the facility;

(7) Designate the individual on each facility covered by the EEP who is assigned primary responsibility for implementing the EEP;

(8) Designate those facility and shoreside support personnel who have the authority to advise the person in charge of the facility as to the best course of action to be taken and who initiate actions to assist facility personnel;

(9) Describe the recognized circumstances, such as fires or blowouts, and environmental conditions, such as approaching hurricanes or ice floes, in which the facility or its personnel would be placed in jeopardy and a mass evacuation of the facility's personnel would be recommended;

(10) For each of the circumstances and conditions described under paragraph (d)(9) of this section, list the pre-evacuation steps for securing operations, whether drilling or production, including the time estimates for completion and the personnel required;

(11) For each of the circumstances and conditions described under paragraph (d)(9) of this section, describe the order in which personnel would be evacuated, the transportation resources to be used in the evacuation, the operational limitations for each mode of transportation specified, and the time and distance factors for initiating the evacuation; and

(12) For each of the circumstances and conditions described under paragraph (d)(9) of this section, identify the means and procedures—

(i) For retrieving persons from the water during an evacuation;

(ii) For transferring persons from the facility to designated standby vessels, lifeboats, or other types of evacuation craft;

(iii) For retrieving persons from designated standby vessels, lifeboats, or other types of evacuation craft if used; and

(iv) For the ultimate evacuation of all persons on the facility to land, another facility, or other location where the evacuees would be reasonably out of danger under the circumstance or condition being addressed.

(e) The operator shall ensure that—

(1) All equipment specified in the EEP, whether the equipment is located on or off of the facility, is made available and located as indicated in the EEP and is designed and maintained so as to be capable of performing its intended function during an emergency evacuation;

(2) All personnel specified in the EEP are available and located as specified in the EEP and are trained in fulfilling their role under the EEP; and

(3) Drills are conducted in accordance with § 146.125(c).

(f) A complete copy of the EEP must be made available to the facility's operating personnel and a brief written summary of, or an oral briefing on, the EEP must be given to each person newly reporting on the facility.

(g) A copy of the EEP must be on board each standby vessel, if any, designated in the EEP and provided to all shoreside support personnel, if any, specified in the EEP.

[CGD 84–098b, 54 FR 21572, May 18, 1989, as amended by USCG–1998–3799, 63 FR 35530, June 30, 1998]

Subpart C—Mobile Offshore Drilling Units

§ 146.200 Definitions.

For the purpose of this subpart:

Arrives on the OCS means when a MODU enters any OCS block area for the purpose of engaging in operations subject to the jurisdiction of the OCS Lands Act.

OCS block area means the names given by the Bureau of Ocean Energy Management, (BOEM) to define the OCS areas used to facilitate management or leasing on the OCS.

[USCG–2008–1088, 76 FR 2262, Jan. 13, 2011, as amended by USCG–2013–0797, 79 FR 36405, June 27, 2014]

§ 146.201 Applicability.

This subpart applies to mobile offshore drilling units engaged in OCS activities.

§ 146.202 Notice of arrival or relocation of MODUs on the OCS.

(a) The owner of any mobile offshore drilling unit engaged in OCS activities

shall, 14 days before arrival of the unit on the OCS or as soon thereafter as practicable, notify the District Commander for the area in which the unit will operate of:

(1) The unit's name, nationality, and designation assigned for identification under 30 CFR 250.37;

(2) The location and year that the unit was built;

(3) The name and address of the owner, and the owner's local representative, if any;

(4) Classification or inspection certificates currently held by the unit;

(5) The location and date that operations are expected to commence and their anticipated duration; and

(6) The location and date that the unit will be available and ready for inspection by the Coast Guard.

(b) Once a unit is located on the OCS, the owner of the unit shall notify the District Commander before relocating the unit.

(c) The information required in paragraphs (a) and (b) of this section may be provided by telephone or may be submitted together with, and need not repeat information contained in, applications and notices under 33 CFR part 67 for aids to navigation on the Outer Continental Shelf or 33 CFR part 135 for applications for certificate of financial responsibility.

§ 146.203 Requirements for U.S. and undocumented MODUs.

Each mobile offshore drilling unit documented under the laws of the United States and each mobile offshore drilling unit that is not documented under the laws of any nation must comply with the operating standards of 46 CFR part 109 when engaged in OCS activities.

§ 146.205 Requirements for foreign MODUs.

Each mobile offshore drilling unit that is documented under the laws of a foreign nation must, when engaged in OCS activities, comply with one of the following:

(a) The operating standards of 46 CFR part 109.

(b) The operating standards of the documenting nation if the standards provide a level of safety generally equivalent to or greater than that provided under 46 CFR part 109.

(c) The operating standards for mobile offshore drilling units contained in the International Maritime Organization (IMO, formerly Inter-Governmental Maritime Consultative Organization or IMCO) (IMO) Code for the Construction and Equipment of Mobile Offshore Drilling Units (IMO Assembly Resolution A. 414(XI)) which has been incorporated by reference and the requirements of 46 CFR Part 109 for matters not addressed by the Code.

§ 146.210 Emergency Evacuation Plan.

(a) Except as otherwise provided in this section, the requirements applicable to Emergency Evacuation Plans (EEPs) on manned OCS facilities under § 146.140 are applicable to MODUs.

(b) An EEP must be submitted by—

(1) The holder of a lease or permit under the Act for each MODU within the area of the lease or the area covered by the permit; or

(2) The operator under 30 CFR 250.2(gg), if other than the holder of a lease or permit, for each MODU within the area in which the operator controls or manages operations.

(c) To avoid unnecessary duplication, the EEP may incorporate by reference pertinent sections of the MODU's operating manual required by 46 CFR 109.121.

(d) In complying with § 146.140(d)(7), the EEP must designate the master or person in charge of the MODU under 46 CFR 109.107 as the individual who is assigned primary responsibility for implementing the EEP, as it relates to that MODU.

[CGD 84–098b, 54 FR 21573, May 18, 1989]

§ 146.215 Safety and Security notice of arrival for U.S. or foreign MODUs.

(a) *General.* At least 96 hours before a MODU arrives on the OCS from a foreign port or place or from a different OCS block area to engage in OCS activities, excluding those U.S. MODUs arriving directly from a U.S. port or place or from an OCS block area, to engage in OCS activities, the owner or operator of the MODU, except as provided in paragraph (f) of this section, must submit the following information

to the National Vessel Movement Center (NVMC):

(1) The location, latitude and longitude, of the MODU at the time the notice of arrival (NOA) is reported;

(2) The area designation, block number or lease number, assigned under 30 CFR 250.154 for identification, where the MODU owner or operator plans to perform OCS activities;

(3) The MODU's name and IMO number, if any;

(4) The date when operations of the MODU are expected to begin and end;

(5) Names of the last two ports or places visited and the associated dates of arrival and departure;

(6) The following information for each individual onboard:

(i) Full name;

(ii) Date of birth;

(iii) Nationality;

(iv) Passport number or marine documentation number (type of identification and number);

(v) Position or duties on the MODU; and

(vi) Name of the port, or place, and country where the individual embarked.

(7) The date of issuance of the MODU's International Safety Management certificate (ISM), if any, and Document of Compliance certificate and the name of the flag administration, or its recognized representative, that issued those certificates; and

(8) The date of issuance of the MODU's International Ship Security certificate (ISSC), if any, and the name of the flag administration, or the recognized security organization representing the flag administration, that issued the ISSC.

(b) *Methods of submission*. The notice must be submitted to the National Vessel Movement Center (NVMC) by electronic Notice of Arrival and Departure format using methods specified in the NVMC's Web site at *http://www.nvmc.uscg.gov/*.

(c) *Updates to a submitted NOA*. Unless otherwise specified in this section, whenever the most recently submitted NOA information becomes inaccurate, the owner or operator of the MODU must revise and re-submit the NOA within the times required in paragraph (e) of this section. An owner or operator does not need to revise or re-submit an NOA for the following:

(1) A change in submitted arrival time that is less than 6 hours;

(2) Changes in the location, latitude and longitude, of the MODUs from the location at the time the NOA was reported; or

(3) Changes to personnel positions or duties on the MODU.

(d) *Required reporting time of an initial NOA*. The owner or operator of a MODU subject to this section must submit an initial NOA:

(1) If the voyage time is more than 96 hours, owners and operators of a MODU must submit an initial NOA at least 96 hours before the MODU arrives at the OCS location where the owner or operator plans to perform OCS activities; or

(2) If the voyage time is less than 96 hours, owners and operators of a MODU must submit an initial NOA at least 24 hours before the MODU arrives at the OCS location where the owner or operator plans to perform OCS activities.

(e) *Required reporting time of an update to an NOA*. The owner or operator of a MODU subject to this section must submit an NOA update:

(1) If the most recently submitted NOA, or NOA update, differs by 24 hours or more from the current estimated time of arrival, the owner or operator of the MODU must provide an updated NOA as soon as practicable but at least 24 hours before the MODU arrives at the OCS location where the owner or operator plans to perform OCS activities; or

(2) If the most recently submitted NOA, or NOA update, differs by less than 24 hours from the current estimated time of arrival, the owner or operator of the MODU must provide an updated NOA as soon as practicable but at least 12 hours before the MODU arrives at the OCS location where the owner or operator plans to perform OCS activities.

(f) *Towing vessels*. When a towing vessel controls a MODU required to submit an NOA under this subpart, the owner or operator of the towing vessel, or lead towing vessel if there is more than one, is responsible for submitting only one NOA containing the information required for the towing vessels,

under § 146.405, and the MODU under paragraph (a) of this section.

(g) This section does not apply to MODU's merely transiting the waters superjacent to the OCS and not engaged in OCS activities.

[USCG–2008–1088, 76 FR 2262, Jan. 13, 2011, as amended by USCG–2013–0797, 79 FR 36405, June 27, 2014]

Subpart D—Vessels—Notice of Casualty

§ 146.301 Applicability.

This subpart applies to vessels engaged in OCS activities other than United States vessels already required to report marine casualties under Subpart 4.05 of 46 CFR part 4 or subpart D of 46 CFR part 109.

§ 146.303 Notice and written report of casualties.

The owner, operator, or person in charge of a vessel engaged in OCS activities shall ensure that the notice of casualty requirements of § 146.30 and the written report requirements of § 146.35 are complied with whenever a casualty involving the vessel occurs which results in:

(a) Death;

(b) Injury to 5 or more persons in a single incident; or

(c) Injury causing any person to be incapacitated for more than 72 hours.

(Approved by the Office of Management and Budget under control number 1625–0001)

[CGD 78–160, 47 FR 9383, Mar. 4, 1982, as amended by USCG–2006–25150, 71 FR 39209, July 12, 2006]

Subpart E—Vessels—Safety and Security Notice of Arrival

SOURCE: USCG–2008–1088, 76 FR 2262, Jan. 13, 2011, unless otherwise noted.

§ 146.401 Applicability.

This subpart applies to all U.S. and foreign vessels, except those U.S. vessels traveling directly from a U.S. port or place, or from an OCS block area, bound for a place on the OCS and planning to engage in OCS activities. Vessels under this subpart include, but are not limited to, standby vessels, attending vessels, offshore supply vessels, pipelay vessels, derrick ships, diving support vessels, oceanographic research vessels, towing vessels, and accommodation vessels. This subpart does not apply to MODUs, which are covered under § 146.215; nor does it apply to floating facilities, which are covered under §§ 146.103 and 146.104.

[USCG–2008–1088, 76 FR 2262, Jan. 13, 2011, as amended by USCG–2013–0797, 79 FR 36405, June 27, 2014]

§ 146.402 Definitions.

For the purpose of this subpart:

Arrives on the OCS means when a vessel enters any OCS block area to commence operations for which it has submitted a Notice of Arrival under § 146.405(b)(2).

OCS block area means the names given by the Bureau of Ocean Energy Management, (BOEM) to define the OCS areas used to facilitate management or leasing on the OCS.

[USCG–2008–1088, 76 FR 2262, Jan. 13, 2011, as amended by USCG–2013–0797, 79 FR 36405, June 27, 2014]

§ 146.405 Safety and Security notice of arrival for vessels arriving at a place on the OCS.

(a) *General.* The owner or operator of each vessel subject to this section must submit an initial NOA to the National Vessel Movement Center (NVMC):

(1) If the voyage time is more than 96 hours, at least 96 hours before the vessel arrives at a place on the OCS from a foreign port or place or from a different OCS block area to engage in OCS activities;

(2) If the voyage time is less than 96 hours and more than 24 hours, before departure, or;

(3) If the voyage time is less than 24 hours, at least 24 hours before the vessel arrives at a place on the OCS.

(b) *Information required in an NOA.* The following information is required from the owners or operators of vessels submitting an NOA:

(1) All the information specified in 33 CFR Table 160.206 with the exception of information required in items (2)(iii) through (2)(vi) and item (6). Item (8) is also not required except as pursuant to the laws on vessel entry (19 U.S.C. 1434) and clearance (46 U.S.C. 60105). Vessel owners and operators should protect

any personal information they gather in preparing notices for transmittal to the NVMC so as to prevent unauthorized disclosure of that information;

(2) The area in which they are conducting their operations. This area can be submitted as either the name of the places, the BOEM block numbers, or the latitudes and longitudes of the places on the OCS where operations are being conducted; and

(3) If any person onboard, including a crewmember, is not required to carry a passport for travel, then passport information required in Table 160.206, items (4)(iv) through (vi), and (5)(iv) through (vi), need not be provided for that person.

(c) *Updates to a submitted NOA*. Unless otherwise specified in this section, whenever the most recently submitted NOA information becomes inaccurate, the owner or operator of that vessel must revise and re-submit the NOA within the times required in paragraph (e) of this section. An owner or operator does not need to revise and re-submit an NOA for the following:

(1) A change in submitted arrival time that is less than 6 hours;

(2) Changes in the location, latitude and longitude, of the vessel from the location at the time the NOA was reported; or

(3) Changes to personnel positions or duties on the vessel.

(d) *Methods of submission*. The notice must be submitted to the NVMC by electronic Notice of Arrival and Departure format using methods specified at the NVMC's Web site at *http://www.nvmc.uscg.gov/*.

(e) *Required reporting time of an NOA update*. The owner or operator of each vessel subject to this section must submit an NOA update:

(1) If the most recently submitted NOA, or NOA update, differs by 24 hours or more from the current estimated time of arrival, the owner or operator of the vessel must provide an update as soon as practicable but at least 24 hours before the vessel arrives at the OCS location where the owner or operator plans to perform OCS activities;

(2) If the most recently submitted NOA, or NOA update, differs by less than 24 hours from the current estimated time of arrival, the owner or operator of the vessel must provide an update as soon as practicable but at least 12 hours before the vessel arrives at the OCS location where the owner or operator plans to perform OCS activities; or

(3) If the remaining voyage time is less than 24 hours, the owner or operator of the vessel must provide an update as soon as practicable, but at least 12 hours before the vessel arrives at a place on the OCS.

(f) *Towing vessels*. When a towing vessel controls a vessel required to submit an NOA under this subpart, the owner or operator of the towing vessel, or lead towing vessel if there is more than one, is responsible for submitting only one NOA containing the information required for the towing vessels and the vessel under its control.

(g) This section does not apply to vessels merely transiting the waters superjacent to the OCS and not engaged in OCS activities.

[USCG–2008–1088, 76 FR 2262, Jan. 13, 2011, as amended by USCG–2013–0797, 79 FR 36405, June 27, 2014]

PART 147—SAFETY ZONES

Sec.

147.1 Purpose of safety zones.
147.5 Delegation of authority.
147.10 Establishment of safety zones.
147.15 Extent of safety zones.
147.20 Definitions.
147.801 Boxer Platform safety zone.
147.803 Bullwinkle Platform safety zone.
147.805 Ursa Tension Leg Platform safety zone.
147.807 West Delta 143 Platform safety zone.
147.809 Mars Tension Leg Platform safety zone.
147.811 Ram-Powell Tension Leg Platform safety zone.
147.813 Auger Tension Leg Platform safety zone.
147.815 ExxonMobil Hoover Floating OCS Facility safety zone.
147.817 Sir Douglas Morpeth Tension Leg Platform safety zone.
147.819 Allegheny Tension Leg Platform safety zone.
147.821 Brutus Tension Leg Platform safety zone.
147.823 Enchilada Platform safety zone.
147.825 Chevron Genesis Spar safety zone.
147.827 Marlin Tension Leg Platform safety zone.

147.829 Matterhorn Tension Leg Platform safety zone.
147.831 Holstein Truss Spar safety zone.
147.833 Na Kika FDS safety zone.
147.835 Magnolia TLP safety zone.
147.837 Marco Polo Tension Leg Platform safety zone.
147.839 Mad Dog Truss Spar Platform safety zone.
147.841 Atlantis Semi-Submersible safety zone.
147.843 Thunder Horse Semi-Submersible safety zone.
147.845 Perdido Regional Host safety zone.
147.847 Safety Zone; BW PIONEER Floating Production, Storage, and Offloading System Safety Zone.
147.849 Safety Zone; Olympus Tension Leg Platform.
147.1102 Platform GRACE safety zone.
147.1103 Platform GINA safety zone.
147.1104 Platform ELLEN & ELLY safety zone.
147.1105 Platform HONDO safety zone.
147.1106 Exxon Santa Ynez offshore storage and treatment vessel mooring safety zone.
147.1107 Platform GILDA safety zone.
147.1108 Platform EDITH safety zone.
147.1109 Platform HERMOSA safety zone.
147.1110 Platform HARVEST safety zone.
147.1111 Platform EUREKA safety zone.
147.1112 Platform HIDALGO safety zone.
147.1113 Platform GAIL safety zone.
147.1114 Platform HARMONY safety zone.
147.1115 Platform HERITAGE safety zone.
147.1116 Platform IRENE safety zone.

AUTHORITY: 14 U.S.C. 85; 43 U.S.C. 1333; Department of Homeland Security Delegation No. 0170.1.

SOURCE: CGD 78–160, 47 FR 9386, Mar. 4, 1982, unless otherwise noted.

§ 147.1 Purpose of safety zones.

Safety zones may be established around OCS facilities being constructed, maintained, or operated on the Outer Continental Shelf to promote the safety of life and property on the facilities, their appurtenances and attending vessels, and on the adjacent waters within the safety zones. Regulations adopted for safety zones may extend to the prevention or control of specific activities and access by vessels or persons, and include measures to protect the living resources of the sea from harmful agents. The regulations do not encompass the operating equipment or procedures used in the drilling for and production of oil, gas, or other minerals, or the transportation of oil, gas, or other minerals by pipeline except as they relate to the safety of life and property on OCS facilities and on the waters adjacent to OCS facilities or to the protection of the living resources of the sea within a safety zone from harmful agents.

§ 147.5 Delegation of authority.

The authority to establish safety zones and to issue and enforce safety zone regulations in accordance with the provisions of this part is delegated to District Commanders.

§ 147.10 Establishment of safety zones.

(a) Whenever it comes to the attention of the District Commander that a safety zone and regulations may be required concerning any OCS facility being constructed, maintained, or operated on the Outer Continental Shelf or its appurtenances and attending vessels, or the adjacent waters, the District Commander may initiate appropriate inquiry to determine whether a safety zone and regulations should be established. In making this determination, the District Commander considers all relevant safety factors, including existing or reasonably foreseeable congestion of vessels, the presence of unusually harmful or hazardous substances, and any obstructions within 500 meters of the OCS facility. If the District Commander determines that the circumstances warrant the establishment of a safety zone and regulations the District Commander takes action as necessary consistent with the provisions of this part.

(b) Except as provided in paragraph (c) of this section, a safety zone and necessary regulations may be established concerning any OCS facility being constructed, maintained or operated on the Outer Continental Shelf, following publication of a notice of proposed rule making in the FEDERAL REGISTER and after interested parties have been given the opportunity to submit comments. A zone and necessary regulations may be in effect during any period when construction equipment and materials are within 500 meters of the construction site until the removal of all portions of the facility.

(c) A safety zone and necessary regulations may be established without

public rule making procedures when the District Commander determined that imminent danger exists with respect to the safety of life and property on an OCS facility constructed, maintained, or operated on the Outer Continental Shelf, its appurtenances and attending vessels or adjacent waters. A safety zone and regulations may be made effective on the date the rule is published in the FEDERAL REGISTER. However, if circumstances require, they may be placed into effect immediately, followed promptly by publication in the FEDERAL REGISTER. The District Commander may utilize, in addition to broadcast Notices to Mariners, Local Notices to Mariners, and Notices to Mariners, newspapers, and broadcasting stations to disseminate information concerning a safety zone and regulations pertaining thereto. The public may comment concerning the establishment of a safety zone or regulations under this paragraph. A safety zone or regulations may be modified or withdrawn, as appropriate, based on the comments received.

(d) Geographic coordinates expressed in terms of latitude or longitude, or both, are not intended for plotting on maps or charts whose referenced horizontal datum is the North American Datum of 1983 (NAD 83), unless such geographic coordinates are expressly labeled NAD 83. Geographic coordinates without the NAD 83 reference may be plotted on maps or charts reference to NAD 83 only after application of the appropriate corrections that are published on the particular map or chart being used.

[CGD 78–160, 47 FR 9386, Mar. 4, 1982, as amended by CGD 86–082, 52 FR 33811, Sept. 8, 1987]

§ 147.15 Extent of safety zones.

A safety zone establishment under this part may extend to a maximum distance of 500 meters around the OCS facility measured from each point on its outer edge or from its construction site, but may not interfere with the use of recognized sea lanes essential to navigation.

§ 147.20 Definitions.

Unless otherwise stated, the term ''attending vessel'' refers to any vessel which is operated by the owner or operator of an OCS facility located in the safety zone, which is used for the purpose of carrying supplies, equipment or personnel to or from the facility, which is engaged in construction, maintenance, alteration, or repair of the facility, or which is used for further exploration, production, transfer or storage of natural resources from the seabed beneath the safety zone.

[CGD 08–99–023, 65 FR 16825, Mar. 30, 2000]

§ 147.801 Boxer Platform safety zone.

(a) Description. The Boxer Platform is located at position 27°56′48″ N, 90°59′48″ W. The area within 500 meters (1640.4 feet) from each point on the structure's outer edge, not to extend into the adjacent East—West Gulf of Mexico Fairway is a safety zone.

(b) *Regulation*. No vessel may enter or remain in this safety zone except:

(1) An attending vessel;

(2) A vessel under 100 feet in length overall not engaged in towing; or

(3) A vessel authorized by the Commander, Eighth Coast Guard District.

[CGD 08–99–023, 65 FR 16825, Mar. 30, 2000]

§ 147.803 Bullwinkle Platform safety zone.

(a) *Description*. The Bullwinkle Platform is located at position 27°53′01″ N, 90°54′04″ W. The area within 500 meters (1640.4 feet) from each point on the structure's outer edge is a safety zone.

(b) *Regulation*. No vessel may enter or remain in this safety zone except:

(1) An attending vessel;

(2) A vessel under 100 feet in length overall not engaged in towing; or

(3) A vessel authorized by the Commander, Eighth Coast Guard District.

[CGD 08–99–023, 65 FR 16825, Mar. 30, 2000]

§ 147.805 Ursa Tension Leg Platform safety zone.

(a) *Description*. The Ursa Tension Leg Platform (Ursa TLP) is located at position 28°09′14.497″ N, 89°06′12.790″ W. The area within 500 meters (1640.4 feet) from each point on the structure's outer edge is a safety zone.

(b) *Regulation*. No vessel may enter or remain in this safety zone except:

(1) An attending vessel;

(2) A vessel under 100 feet in length overall not engaged in towing; or

(3) A vessel authorized by the Commander, Eighth Coast Guard District.

[CGD 08–99–023, 65 FR 16825, Mar. 30, 2000]

§ 147.807 West Delta 143 Platform safety zone.

(a) *Description*. The West Delta 143 Platform is located at position 28°39′42″ N, 89°33′05″ W. The area within 500 meters (1640.4 feet) from each point on the structure's outer edge, not to extend into the adjacent Mississippi River Approach Fairway, is a safety zone.

(b) *Regulation*. No vessel may enter or remain in this safety zone except: (1) An attending vessel;

(2) A vessel under 100 feet in length overall not engaged in towing; or

(3) A vessel authorized by the Commander, Eighth Coast Guard District.

[CGD 08–99–023, 65 FR 16825, Mar. 30, 2000]

§ 147.809 Mars Tension Leg Platform safety zone.

(a) *Description*. The Mars Tension Leg Platform (Mars TLP) is located at position 28°10′10.29″ N, 89°13′22.35″ W with two supply boat mooring buoys at positions 28°10′18.12″ N, 89°12′52.08″ W (Northeast) and 28°09′49.62″ N, 89°12′57.48″ W (Southeast). The area within 500 meters (1640.4 feet) from each point on the structure's outer edge and the area within 500 meters (1640.4 feet) of each of the supply boat mooring buoys is a safety zone.

(b) *Regulation*. No vessel may enter or remain in this safety zone except:

(1) An attending vessel;

(2) A vessel under 100 feet in length overall not engaged in towing; or

(3) A vessel authorized by the Commander, Eighth Coast Guard District.

[CGD 08–99–023, 65 FR 16825, Mar. 30, 2000]

§ 147.811 Ram-Powell Tension Leg Platform safety zone.

(a) *Description*. The Ram-Powell Tension Leg Platform (Ram-Powell TLP) is located at position 29°03′52.2″ N, 88°05′30″ W with two supply boat mooring buoys at positions 29°03′52.2″ N, 88°05′12.6″ W (Northeast) and 29°03′28.2″ N, 88°05′10.2″ W (Southeast). The area within 500 meters (1640.4 feet) from each point on the structure's outer edge and the area within 500 meters (1640.4 feet) of each of the supply boat mooring buoys is a safety zone.

(b) *Regulation*. No vessel may enter or remain in this safety zone except:

(1) An attending vessel;

(2) A vessel under 100 feet in length overall not engaged in towing; or

(3) A vessel authorized by the Commander, Eighth Coast Guard District.

[CGD 08–99–023, 65 FR 16825, Mar. 30, 2000]

§ 147.813 Auger Tension Leg Platform safety zone.

(a) *Description*. The Auger Tension Leg Platform (Auger TLP) is located at position 27°32′45.4″ N, 92°26′35.09″ W with two supply boat mooring buoys at positions 27°32′38.1″ N, 92°26′04.8″ W (East Buoy) and 27°32′58.14″ N, 92°27′04.92″ W (West Buoy). The area within 500 meters (1640.4 feet) from each point on the structure's outer edge and an area within 500 meters (1640.4 feet) of each of the supply boat mooring buoys is a safety zone.

(b) *Regulation*. No vessel may enter or remain in this safety zone except:

(1) an attending vessel;

(2) A vessel under 100 feet in length overall not engaged in towing or fishing; or

(3) A vessel authorized by the Commander, Eighth Coast Guard District.

[CGD 08–99–023, 65 FR 16825, Mar. 30, 2000]

§ 147.815 ExxonMobil Hoover Floating OCS Facility safety zone.

(a) *Description*. The ExxonMobil Hoover Floating OCS Facility, Alaminos Canyon Block 25A (AC25A), is located at position 26°56′33″ N, 94°41′19.55″ W. The area within 500 meters (1640.4 feet) from each point on the structure's outer edge is a safety zone.

(b) *Regulation*. No vessel may enter or remain in this safety zone except the following:

(1) An attending vessel;

(2) A vessel under 100 feet in length overall not engaged in towing; or

(3) A vessel authorized by the Commander, Eighth Coast Guard District

[CGD08–01–025, 68 FR 4102, Jan. 28, 2003]

§ 147.817 Sir Douglas Morpeth Tension Leg Platform safety zone.

(a) *Description*. The Sir Douglas Morpeth Tension Leg Platform (Morpeth TLP), Ewing Bank Block 921A (EW 921A), is located at position 28°02′05.28″ N, 90°01′22.12″ W. The area within 500 meters (1640.4 feet) from each point on the structure's outer edge is a safety zone.

(b) *Regulation*. No vessel may enter or remain in this safety zone except the following:

(1) An attending vessel;

(2) A vessel under 100 feet in length overall not engaged in towing; or

(3) A vessel authorized by the Commander, Eighth Coast Guard District.

[CGD08–01–025, 68 FR 4102, Jan. 28, 2003]

§ 147.819 Allegheny Tension Leg Platform safety zone.

(a) *Description*. The Allegheny Tension Leg Platform (Allegheny TLP), Green Canyon Block 254A (GC 254A), is located at position 27°41′29.65″ N, 90°16′31.93″ W. The area within 500 meters (1640.4 feet) from each point on the structure's outer edge is a safety zone.

(b) *Regulation*. No vessel may enter or remain in this safety zone except the following:

(1) An attending vessel;

(2) A vessel under 100 feet in length overall not engaged in towing; or

(3) A vessel authorized by the Commander, Eighth Coast Guard District.

[CGD08–01–025, 68 FR 4102, Jan. 28, 2003]

§ 147.821 Brutus Tension Leg Platform safety zone.

(a) *Description*. The Brutus Tension Leg Platform (Brutus TLP), Green Canyon Block 158 (GC 158), is located at position 27°47′42.86″ N, 90°38′51.15″ W. The area within 500 meters (1640.4 feet) from each point on the structure's outer edge is a safety zone.

(b) *Regulation*. No vessel may enter or remain in this safety zone except the following:

(1) An attending vessel;

(2) A vessel under 100 feet in length overall not engaged in towing; or

(3) A vessel authorized by the Commander, Eighth Coast Guard District.

[CGD08–01–025, 68 FR 4102, Jan. 28, 2003]

§ 147.823 Enchilada Platform safety zone.

(a) *Description*. The Enchilada Platform, Garden Banks Block 128A (GB 128A), is located at position 27°52′31.31″ N, 91°59′11.09″ W. The area within 500 meters (1640.4 feet) from each point on the structure's outer edge, not to extend into the adjacent East-West Gulf of Mexico Fairway, is a safety zone.

(b) *Regulation*. No vessel may enter or remain in this safety zone except the following:

(1) An attending vessel;

(2) A vessel under 100 feet in length overall not engaged in towing; or

(3) A vessel authorized by the Commander, Eighth Coast Guard District.

[CGD08–01–025, 68 FR 4102, Jan. 28, 2003]

§ 147.825 Chevron Genesis Spar safety zone.

(a) *Description*. The Chevron Genesis Spar, Green Canyon 205A (GC205A), is located at position 27°46′46.365″ N, 90°31′06.553″ W. The area within 500 meters (1640.4 feet) from each point on the structure's outer edge is a safety zone.

(b) *Regulation*. No vessel may enter or remain in this safety zone except the following:

(1) An attending vessel;

(2) A vessel under 100 feet in length overall not engaged in towing; or

(3) A vessel authorized by the Commander, Eighth Coast Guard District.

[CGD08–01–043, 68 FR 4100, Jan. 28, 2003]

§ 147.827 Marlin Tension Leg Platform safety zone.

(a) *Description*. The Marlin Tension Leg Platform (Marlin TLP), Viasca Knoll, Block 915 (VK 915), is located at position 29°6′27.46″ N, 87°56′37.14″ W. The area within 500 meters (1640.4 feet) from each point on the structure's outer edge is a safety zone.

(b) *Regulation*. No vessel may enter or remain in this safety zone except the following:

(1) An attending vessel;

(2) A vessel under 100 feet in length overall not engaged in towing; or

(3) A vessel authorized by the Commander, Eighth Coast Guard District.

[CGD08–02–045, 68 FR 55445, Sept. 26, 2003]

§ 147.829 Matterhorn Tension Leg Platform safety zone.

(a) *Description*. The Matterhorn Tension Leg Platform A (Matterhorn TLP), Mississippi Canyon 243 (MC 243), located at position 28°44′32″ N, 88°39′32″ W. The area within 500 meters (1640.4 feet) from each point on the structure's outer edge is a safety zone. These coordinates are based upon [NAD 83].

(b) *Regulation*. No vessel may enter or remain in this safety zone except the following:

(1) An attending vessel;

(2) A vessel under 100 feet in length overall not engaged in towing; or

(3) A vessel authorized by the Commander, Eighth Coast Guard District.

[CGD08–03–017, 68 FR 59118, Oct. 14, 2003]

§ 147.831 Holstein Truss Spar safety zone.

(a) *Description*. Holstein, Green Canyon 645 (GC 645), located at position 27°19′17″ N, 90°32′08″ W. The area within 500 meters (1640.4 feet) from each point on the structure's outer edge is a safety zone. These coordinates are based upon North American Datum 1983.

(b) *Regulation*. No vessel may enter or remain in this safety zone except the following:

(1) An attending vessel;

(2) A vessel under 100 feet in length overall not engaged in towing; or

(3) A vessel authorized by the Commander, Eighth Coast Guard District.

[CGD08–03–028, 69 FR 6147, Feb. 10, 2004]

§ 147.833 Na Kika FDS safety zone.

(a) *Description*. Na Kika FDS, Mississippi Canyon 474 ''A'' (MC 474 ''A''), located at position 28°31′14.86″ N, 88°17′19.69″ W. The area within 500 meters (1640.4 feet) from each point on the structure's outer edge is a safety zone. These coordinates are based upon [NAD 83].

(b) *Regulation*. No vessel may enter or remain in this safety zone except the following: (1) An attending vessel;

(2) A vessel under 100 feet in length overall not engaged in towing; or

(3) A vessel authorized by the Commander, Eighth Coast Guard District.

[CGD08–03–039, 69 FR 21066, Apr. 20, 2004]

§ 147.835 Magnolia TLP safety zone.

(a) *Description*. Magnolia TLP, Garden Banks 783 ''A'' (GB 783 ''A''), located at position 27°12′13.86″ N, 92°12′09.36″ W. The area within 500 meters (1640.4 feet) from each point on the structure's outer edge is a safety zone. These coordinates are based upon [NAD 83].

(b) *Regulation*. No vessel may enter or remain in this safety zone except the following:

(1) An attending vessel;

(2) A vessel under 100 feet in length overall not engaged in towing; or

(3) A vessel authorized by the Commander, Eighth Coast Guard District.

[CGD08–03–040, 69 FR 19934, Apr. 15, 2004]

§ 147.837 Marco Polo Tension Leg Platform safety zone.

(a) *Description*. Marco Polo Tension Leg Platform, Green Canyon 608 (GC 608), located at position 27°21′43.32″ N, 90°10′53.01″ W. The area within 500 meters (1640.4 feet) from each point on the structure's outer edge is a safety zone. These coordinates are based upon [NAD 83].

(b) *Regulation*. No vessel may enter or remain in this safety zone except the following:

(1) An attending vessel;

(2) A vessel under 100 feet in length overall not engaged in towing; or

(3) A vessel authorized by the Commander, Eighth Coast Guard District.

[CGD08–04–004, 69 FR 33858, June 17, 2004]

§ 147.839 Mad Dog Truss Spar Platform safety zone.

(a) *Description*. Mad Dog Truss Spar Platform, Green Canyon 782 (GC 782), located at position 27°11′18″ N, 91°05′12″ W. The area within 500 meters (1640.4 feet) from each point on the structure's outer edge is a safety zone. These coordinates are based upon [NAD 83].

(b) *Regulation*. No vessel may enter or remain in this safety zone except the following:

(1) An attending vessel;

(2) A vessel under 100 feet in length overall not engaged in towing; or

(3) A vessel authorized by the Commander, Eighth Coast Guard District.

[CGD08–05–012, 70 FR 43768, July 29, 2005]

§ 147.841 Atlantis Semi-Submersible safety zone.

(a) *Description.* Atlantis Semi-Submersible, Green Canyon 787 (GC 787), located at position 27°11′44″ N, 90°01′37″ W. The area within 500 meters (1640.4 feet) from each point on the structure's outer edge is a safety zone. These coordinates are based upon [NAD 83].

(b) *Regulation.* No vessel may enter or remain in this safety zone except the following:

(1) An attending vessel;

(2) A vessel under 100 feet in length overall not engaged in towing; or

(3) A vessel authorized by the Commander, Eighth Coast Guard District.

[CGD08–05–015, 70 FR 43772, July 29, 2005]

§ 147.843 Thunder Horse Semi-Submersible safety zone.

(a) *Description.* Thunder Horse Semi-Submersible, Mississippi Canyon 778 (MC 778), located at position 28°11′26″ N, 88°29′44″ W. The area within 500 meters (1640.4 feet) from each point on the structure's outer edge is a safety zone. These coordinates are based upon [NAD 83].

(b) *Regulation.* No vessel may enter or remain in this safety zone except the following:

(1) An attending vessel;

(2) A vessel under 100 feet in length overall not engaged in towing; or

(3) A vessel authorized by the Commander, Eighth Coast Guard District.

[CGD08–05–019, 70 FR 43770, July 29, 2005]

§ 147.845 Perdido Regional Host safety zone.

(a) *Description.* The Perdido Regional Host is located at position 26°07′44″ N, 094°53′53″ W. The area within 500 meters (1640.4 feet) from each point on the structure's outer edge is a safety zone.

(b) *Regulation.* No vessel may enter or remain in this safety zone except the following:

(1) An attending vessel;

(2) A vessel under 100 feet in length overall not engaged in towing; or

(3) A vessel authorized by the Commander, Eighth Coast Guard District or a designated representative.

[USCG–2008–1051, 74 FR 55138, Oct. 27, 2009]

§ 147.847 Safety Zone; BW PIONEER Floating Production, Storage, and Offloading System Safety Zone.

(a) *Description.* The BW PIONEER, a Floating Production, Storage and Offloading (FPSO) system, is in the deepwater area of the Gulf of Mexico at Walker Ridge 249. The FPSO can swing in a 360 degree arc around the center point of the turret buoy's swing circle at 26°41′46.25″ N and 090°30′30.16″ W. The area within 500 meters (1640.4 feet) around the stern of the FPSO when it is moored to the turret buoy is a safety zone. If the FPSO detaches from the turret buoy, the area within 500 meters around the center point at 26°41′46.25″ N and 090°30′30.16″ W is a safety zone.

(b) *Regulation.* No vessel may enter or remain in this safety zone except the following:

(1) An attending vessel;

(2) A vessel under 100 feet in length overall not engaged in towing; or

(3) A vessel authorized by the Commander, Eighth Coast Guard District.

[USCG–2009–0571, 75 FR 19882, Apr. 16, 2010]

§ 147.849 Safety Zone; Olympus Tension Leg Platform.

(a) *Description.* The Olympus Tension Leg Platform is in the deepwater area of the Gulf of Mexico in Mississippi Canyon Block 807B. The facility is located at 28° 9′35.59″ N, 89°14′20.86″ W. The area within 500 meters (1640.4 feet) from each point on the structure's outer edge and the area within 500 meters (1640.4 feet) of each of the supply boat mooring buoys is a safety zone.

(b) *Regulation.* No vessel may enter or remain in this safety zone except the following:

(1) An attending vessel;

(2) A vessel under 100 feet in length overall not engaged in towing; or

(3) A vessel authorized by the Commander, Eighth Coast Guard District or a designated representative.

[USCG–2013–0070, 79 FR 6819, Feb. 5, 2014]

§ 147.1102 Platform GRACE safety zone.

(a) *Description:* The area within a line 500 meters from each point on the structure's outer edge. The position of the center of the structure is 34°–10′–47″ N, 119°–28′–05″ W.

(b) *Regulations:* No vessel may enter or remain in this safety zone except the following: (1) An attending vessel, (2) a vessel under 100 feet in length overall not engaged in towing, or (3) a vessel authorized by the Commander, Eleventh Coast Guard District.

[CCGD 11–79–02, 47 FR 39679, Sept. 9, 1982; 48 FR 33263, July 21, 1983]

§ 147.1103 Platform GINA safety zone.

(a) *Description:* The area within a line 500 meters from each point on the structure's outer edge. The position of the center of the structure is 34°–07′–02″ N, 119°–16′–35″ W.

(b) *Regulations:* No vessel may enter or remain in this safety zone except the following: (1) An attending vessel, (2) a vessel under 100 feet in length overall not engaged in towing, or (3) a vessel authorized by the Commander, Eleventh Coast Guard District.

[CCGD 11–79–02, 47 FR 39679, Sept. 9, 1982; 48 FR 33263, July 21, 1983]

§ 147.1104 Platform ELLEN & ELLY safety zone.

(a) *Description:* The areas within a line 500 meters from each point on the outer edge of each structure. The structures are approximately 120 meters apart. The position of the center of each structure is: Platform Ellen, 33°–34′–57″ N, 118°–07′–42″ W; and Platform Elly, 33°–35′–00″ N, 118°–07′–40″ W.

(b) *Regulations:* No vessel may enter or remain in this safety zone except the following: (1) An attending vessel serving either structure, (2) a vessel under 100 feet in length overall not engaged in towing, or (3) a vessel authorized by the Commander, Eleventh Coast Guard District.

[CCGD 11–79–02, 47 FR 39679, Sept. 9, 1982; 48 FR 33263, July 21, 1983]

§ 147.1105 Platform HONDO safety zone.

(a) *Description:* The area within a line 500 meters from each point on the structure's outer edge. The position of the center of the structure is 34°–23′–27″ N, 120°–07′–14″ W.

(b) *Regulations:* No vessel may enter or remain in this safety zone except for the following: (1) An attending vessel, (2) a vessel under 100 feet in length overall not engaged in towing, or (3) a vessel authorized by the Commander, Eleventh Coast Guard District.

[CCGD 11–79–02, 47 FR 39679, Sept. 9, 1982; 48 FR 33263, July 21, 1983]

§ 147.1106 Exxon Santa Ynez offshore storage and treatment vessel mooring safety zone.

(a) *Description:* The area within a line 1108 meters for the center of the mooring. The position of the center of the mooring is 34°–24′–19″ N 120°–06′00″ W.

(b) *Regulations:* No vessel may enter or remain in this safety zone except the following: (1) An attending vessel, (2) a vessel under 100 feet in length overall not engaged in towing, or (3) a vessel authorized by the Commander, Eleventh Coast Guard District.

[CCGD 11–79–02, 47 FR 39679, Sept. 9, 1982; 48 FR 33263, July 21, 1983]

§ 147.1107 Platform GILDA safety zone.

(a) *Description:* The area within a line 500 meters from each point on the structure's outer edge. The position of the center of the structure is 34°–10′–56″ N. 119°–25′–07″ W.

(b) *Regulations:* No vessel may enter or remain in this safety zone except for the following: (1) An attending vessel, (2) a vessel under 100 feet in length overall not engaged in towing, or (3) a vessel authorized by the Commander, Eleventh Coast Guard District.

[CCGD 11–79–02, 47 FR 39679, Sept. 9, 1982; 48 FR 33263, July 21, 1983]

§ 147.1108 Platform EDITH safety zone.

(a) *Description:* The area within a line 500 meters from each point on the structure's outer edge. The position of the center of the structure is 33°–35′–45″ N. 118°–08′–27″ W.

(b) *Regulations:* No vessel may enter or remain in this safety zone except for the following: (1) An attending vessel, (2) a vessel under 100 feet in length overall not engaged in towing, or (3) a vessel authorized by the Commander, Eleventh Coast Guard District.

[CCGD 11–79–02, 47 FR 39679, Sept. 9, 1982; 48 FR 33263, July 21, 1983]

§ 147.1109 Platform HERMOSA safety zone.

(a) *Description:* The area within a line 500 meters from each point on the structure's outer edge. The position of the center of the structure is 34–27–19 N, 120–38–47 W.

(b) *Regulations:* No vessel may enter or remain in this safety zone except the following: (1) An attending vessel, (2) a vessel under 100 feet in length overall not engaged in towing or (3) a vessel authorized by the Commander, Eleventh Coast Guard District.

[CGD 11–84–01, 49 FR 33015, Aug. 20, 1984]

§ 147.1110 Platform HARVEST safety zone.

(a) *Description:* The area within a line 500 meters from each point on the structure's outer edge. The position of the center of the structure is 34–28–09.5 N, 120–40–46.1 W.

(b) *Regulations:* No vessel may enter or remain in this safety zone except for the following: (1) An attending vessel, (2) a vessel under 100 feet in length overall not engaged in towing or (3) a vessel authorized by the Commander, Eleventh Coast Guard District.

[CGD 11–84–01, 49 FR 33016, Aug. 20, 1984]

§ 147.1111 Platform EUREKA safety zone.

(a) *Description:* The area within a line 500 meters from each point on the structure's outer edge. The position of the center of the structure is 33–33–50 N, 118–07–00 W.

(b) *Regulations:* No vessel may enter or remain in this safety zone except the following: (1) An attending vessel, (2) a vessel under 100 feet in length overall not engaged in towing or (3) a vessel authorized by the Commander, Eleventh Coast Guard District.

[CGD 11–84–01, 49 FR 33016, Aug. 20, 1984]

§ 147.1112 Platform HIDALGO safety zone.

(a) *Description:* The area within a line 500 meters from each point on the structure's outer edge. The position of the center of the structure is 34–29–42 N, 120–42–08 W.

(b) *Regulations:* No vessel may enter or remain in this safety zone except the following: (1) An attending vessel, (2) a vessel under 100 feet in length overall not engaged in towing or (3) a vessel authorized by the Commander, Eleventh Coast Guard District.

[CGD 11–84–01, 49 FR 33016, Aug. 20, 1984]

§ 147.1113 Platform GAIL safety zone.

(a) *Description:* The area within a line 500 meters from each point on the structure's outer edge. The position of the center of the structure is 34°–07′–30″ N, 119°–24′–01″ W.

(b) *Regulation:* No vessel may enter or remain in this safety zone except the following: (1) An attending vessel, (2) a vessel under 100 feet in length overall not engaged in towing, or (3) a vessel authorized by the Commander, Eleventh Coast Guard District.

[CGD11–87–06, 52 FR 9657, Mar. 26, 1987]

§ 147.1114 Platform HARMONY safety zone.

(a) *Description:* The area within a line 500 meters from each point on the structure's outer edge. The position of the center of the structure is 34°–22′–36″ N, 120°–10′–03″ W.

(b) *Regulation:* No vessel may enter or remain in this safety zone except the following: (1) an attending vessel; (2) a vessel under 100 feet in length overall not engaged in towing; or (3) a vessel authorized by the Commander, Eleventh Coast Guard District.

[CGD11–92–01, 57 FR 9055, Mar. 16, 1992]

§ 147.1115 Platform HERITAGE safety zone.

(a) *Description:* The area within a line 500 meters from each point on the structure's outer edge. The position of the center of the structure is 34°–21′–01″ N, 120°–16′–45″ W.

(b) *Regulation:* No vessel may enter or remain in this safety zone except the following: (1) An attending vessel; (2) a vessel under 100 feet in length overall not engaged in towing; or (3) a vessel authorized by the Commander, Eleventh Coast Guard District.

[CGD11–92–01, 57 FR 9055, Mar. 16, 1992]

§ 147.1116 Platform IRENE safety zone.

(a) *Description:* The area within a line 500 meters from each point on the structure's outer edge. The position of

the center of the structure is 34°–36′–37.5″ N, 120°–43′–46″ W.

(b) *Regulation:* No vessel may enter or remain in this safety zone except the following: (1) An attending vessel; (2) a vessel under 100 feet in length overall not engaged in towing; or (3) a vessel authorized by the Commander, Eleventh Coast Guard District.

[CGD11–92–02, 57 FR 9054, Mar. 16, 1992]

SUBCHAPTER NN—DEEPWATER PORTS

PART 148—DEEPWATER PORTS: GENERAL

Subpart A—General

Sec.
148.1 What is the purpose of this subchapter?
148.2 Who is responsible for implementing this subchapter?
148.3 What Federal agencies are responsible for implementing the Deepwater Port Act?
148.5 How are terms used in this subchapter defined?
148.8 How are certifying entities designated and used for purposes of this subchapter?

Subpart B—Application for a License

148.100 What is the purpose of this subpart?
148.105 What must I include in my application?
148.107 What additional information may be required?
148.108 What if a Federal or State agency or other interested party requests additional information?
148.110 How do I prepare my application?
148.115 How many copies of the application must I send and where must I send them?
148.125 What are the application fees?

Subpart C—Processing Applications

GENERAL

148.200 What is the purpose of this subpart?
148.205 How are documents related to the application maintained?
148.207 How and where may I view docketed documents?
148.209 How is the application processed?
148.211 What must I do if I need to change my application?
148.213 How do I withdraw my application?
148.215 What if a port has plans for a deep draft channel and harbor?
148.217 How can a State be designated as an Adjacent Coastal State?
148.221 How do I claim, or object to a claim, that required information is privileged?

PUBLIC HEARINGS OR MEETINGS

148.222 When must public hearings or meetings be held?
148.227 How is a public hearing or meeting reported?

FORMAL HEARINGS

148.228 What if a formal evidentiary hearing is necessary?
148.230 How is notice of a formal hearing given?
148.232 What are the rules for a formal hearing?
148.234 What are the limits of an Administrative Law Judge (ALJ)'s jurisdiction?
148.236 What authority does an Administrative Law Judge (ALJ) have?
148.238 Who are the parties to a formal hearing?
148.240 How does a State or a person intervene in a formal hearing?
148.242 How does a person who is not a party to a formal hearing present evidence at the hearing?
148.244 Who must represent the parties at a formal hearing?
148.246 When is a document considered filed and where should I file it?
148.248 What happens when a document does not contain all necessary information?
148.250 Who must be served before a document is filed?
148.252 What is the procedure for serving a subpoena?
148.254 How is a hearing transcript prepared?
148.256 What happens at the conclusion of a formal hearing?

APPROVAL OR DENIAL OF THE APPLICATION

148.276 When must the application be approved or denied?
148.277 How may Federal agencies and States participate in the application process?
148.279 What are the criteria for approval or denial of an application?
148.281 What happens when more than one application is submitted for a deepwater port in the same application area?
148.283 When is the application process stopped before the application is approved or denied?

Subpart D—Licenses

148.300 What does this subpart concern?
148.305 What is included in a deepwater port license?
148.307 Who may consult with the Commandant (CG–5P) and MARAD on developing the proposed conditions of a license?
148.315 How is a license amended, transferred, or reinstated?
148.320 How is a license enforced, suspended, or revoked?
148.325 How soon after deepwater port decommissioning must the licensee initiate removal?

Subpart E—Site Evaluation and Pre-Construction Testing

148.400 What does this subpart do?
148.405 What are the procedures for notifying the Commandant (CG–5P) of proposed site evaluation and pre-construction testing?
148.410 What are the conditions for conducting site evaluation and pre-construction testing?
148.415 When conducting site evaluation and pre-construction testing, what must be reported?
148.420 When may the Commandant (CG–5P) suspend or prohibit site evaluation or pre-construction testing?

Subpart F—Exemption From or Adjustments to Requirements in This Subchapter

148.500 What does this subpart do?
148.505 How do I apply for an exemption?
148.510 What happens when a petition for exemption involves the interests of an Adjacent Coastal State?
148.515 When is an exemption allowed?
148.600 What is the limit of financial liability?
148.605 How is the limit of liability determined?

Subpart G—Environmental Review Criteria for Deepwater Ports

148.700 How does the Deepwater Port Act interact with other Federal and State laws?
148.702 How were the environmental review criteria developed?
148.705 What is determined by the environmental evaluation?
148.707 What type of criteria will be used in an environmental review, and how will they be applied?
148.708 Must the applicant's proposal reflect potential regulations?
148.709 How are these criteria reviewed and revised?
148.710 What environmental conditions must be satisfied?
148.715 How is an environmental review conducted?
148.720 What are the siting criteria?
148.722 Should the construction plan incorporate best available technology and recommended industry practices?
148.725 What are the design, construction and operational criteria?
148.730 What are the land use and coastal zone management criteria?
148.735 What are other critical criteria that must be evaluated?
148.737 What environmental statutes must an applicant follow?

AUTHORITY: 33 U.S.C. 1504; Department of Homeland Security Delegation No. 0170.1 (75).

SOURCE: USCG–1998–3884, 71 FR 57651, Sept. 29, 2006, unless otherwise noted.

EDITORIAL NOTE: Nomenclature changes to part 148 appear by USCG–2010–0351, 75 FR 36284, June 25, 2010.

Subpart A—General

§ 148.1 What is the purpose of this subchapter?

This subchapter prescribes regulations for the licensing, construction, design, equipment, and operation of deepwater ports under the Deepwater Port Act of 1974, as amended (codified at 33 U.S.C. 1501 *et seq.*) (the Act).

[USCG–1998–3884, 71 FR 57651, Sept. 29, 2006, as amended by USCG–2013–0397, 78 FR 39175, July 1, 2013]

§ 148.2 Who is responsible for implementing this subchapter?

Unless otherwise specified, the owner of a deepwater port must ensure that the requirements of this subchapter are carried out at that port.

§ 148.3 What Federal agencies are responsible for implementing the Deepwater Port Act?

(a) Under delegations from the Secretary of Homeland Security and the Secretary of Transportation, the Coast Guard and MARAD coordinate with each other in processing applications for the issuance, transfer, or amendment of a license for the construction and operation of a deepwater port.

(b) MARAD is responsible for issuing the Record of Decision to announce whether a license application is approved, approved with conditions, or denied, and for issuing, revoking, and reinstating deepwater port licenses. MARAD also has authority over the approval of fees charged by Adjacent Coastal States, and certain matters relating to international policy, civil actions, and suspension or termination of licenses.

(c) The Secretary of Transportation has delegated authority over pipeline matters to the Pipeline Hazardous Materials and Safety Administration.

(d) The Environmental Protection Agency (EPA), U.S. Army Corps of Engineers, Bureau of Ocean Energy Management (BOEM) in the Department of Interior, and other Federal agencies are designated as cooperating agencies and support the Coast Guard and MARAD in the review and evaluation of deepwater port license applications. You can view the interagency memorandum of understanding (MOU) outlining the relative roles and responsibilities of these and other Federal agencies at: *http://www.uscg.mil/hq/G-P/mso/docs/*

dwp__white__house__task__force__

energy__streamlining.pdf.

[USCG–1998–3884, 71 FR 57651, Sept. 29, 2006, as amended by USCG–2011–0257, 76 FR 31837, June 2, 2011; USCG–2013–0397, 78 FR 39175, July 1, 2013]

§ 148.5 How are terms used in this subchapter defined?

As used in this subchapter:

Act means the Deepwater Port Act of 1974, as amended (codified at 33 U.S.C. 1501 *et seq.*).

Adjacent Coastal State means any coastal State which:

(1) Would be directly connected by pipeline to a deepwater port, as proposed in an application;

(2) Would be located within 15 miles of any such proposed deepwater port; or

(3) Is designated as an Adjacent Coastal State by MARAD under 33 U.S.C. 1508(a)(2).

Affiliate means a person:

(1) That has a direct or indirect ownership interest of more than 3 percent in an applicant;

(2) That offers to finance, manage, construct, or operate the applicant's deepwater port to any significant degree;

(3) That owns or controls an applicant or an entity under paragraphs (1) or (2) of this definition; or

(4) That is owned or controlled by, or under common ownership with, an applicant or an entity under paragraphs (1), (2), or (3) of this definition.

Applicant means a person that is the owner of a proposed deepwater port and is applying for a license under this part for that port.

Application means an application submitted under this part for a license to own, construct, and operate a deepwater port.

Approval series means the first six digits of a number assigned by the Coast Guard to approved equipment. Where approval is based on a subpart of 46 CFR chapter I, subchapter Q, the approval series corresponds to the number of the subpart. A list of approved equipment, including all of the approval series, is available at: *http://cgmix.uscg.mil/Equipment.*

Approved means approved by the Commandant (CG–5P).

Area to be avoided or *ATBA* means a routing measure comprising an area within defined limits in which either navigation is particularly hazardous or it is exceptionally important to avoid casualties and should be avoided by all ships or certain classes of vessels. An ATBA may be either recommended (''recommendatory'') or mandatory. An ATBA is recommendatory when ships are advised to navigate with caution in light of specially hazardous conditions. An ATBA is mandatory when navigation is prohibited or subject to a competent authority's conditions. ATBAs for deepwater ports are recommendatory.

Barrel means 42 U.S. gallons (approximately 159 liters) at atmospheric pressure and 60 °F (approximately 15.56 °C).

Captain of the Port or *COTP* means a Coast Guard officer who commands a Captain of the Port zone described in part 3 of this chapter and who is immediately responsible for enforcing port safety and security and marine environmental protection regulations within that area.

Certified industrial hygienist means an industrial hygienist who is certified by the American Board of Industrial Hygiene.

Certified marine chemist means a marine chemist who is certified by the National Fire Protection Association.

Certifying entity or *CE* means any individual or organization, other than the operator, permitted by the Commandant (CG–5P) to act on behalf of the Coast Guard pursuant to section 148.8 of this subpart. The activities may include reviewing plans and calculations for construction of deepwater

ports, conducting inspections, witnessing tests, and certifying systems and/or components associated with deepwater ports as safe and suitable for their intended purpose.

Citizen of the United States means:

(1) Any person who is a United States citizen by law, birth, or naturalization;

(2) Any State, State agency, or group of States; or

(3) Any corporation, partnership, or other association:

(i) That is organized under the laws of any State;

(ii) Whose president, chairman of the board of directors, and general partners or their equivalents, are persons described in paragraph (1) of this definition; and

(iii) That has no more of its directors who are not persons described in paragraph (1) of this definition than constitute a minority of the number required for a quorum to conduct the business of the board of directors.

Coastal environment means the coastal waters including the lands in and under those waters, internal waters, and the adjacent shorelines including waters in and under those shorelines. The term includes, but is not limited to:

(1) Transitional and intertidal areas, bays, lagoons, salt marshes, estuaries, and beaches;

(2) Fish, wildlife, and other living resources of those waters and lands; and

(3) The recreational and scenic values of those lands, waters, and resources.

Coastal State means a State of the United States in or bordering the Atlantic, Pacific, or Arctic Oceans or the Gulf of Mexico.

Commandant (CG–5P) means the Assistant Commandant for Prevention, or that individual's authorized representative, at Commandant (CG–5P), U.S. Coast Guard, 2100 Second Street SW., Washington, DC 20593–0001.

Confined space means a space that may contain a dangerous atmosphere, including a space that:

(1) Has poor natural ventilation, such as a space with limited openings, for example a cofferdam or double bottom tank; or

(2) Is not designed for continuous occupancy by personnel.

Construction means supervising, inspecting, actual building, and all other activities incidental to the building, repairing, or expanding of a deepwater port or any of its components. The term includes, but is not limited to, fabrication, laying of pipe, pile driving, bulk heading, alterations, modifications, and additions to the deepwater port.

Control means the direct or indirect power to determine the policy, business practices, or decisionmaking process of another person, whether by stock or other ownership interest, by representation on a board of directors or similar body, by contract or other agreement with stockholders or others, or otherwise.

Crude oil means a mixture of hydrocarbons that exists in the liquid phase in natural underground reservoirs, and remains liquid at atmospheric pressure after passing through surface separating facilities, and includes:

(1) Liquids technically defined as crude oil;

(2) Small amounts of hydrocarbons that exist in the gaseous phase in natural underground reservoirs but are liquid at atmospheric pressure after being recovered from oil well (casing head) gas in lease separators; and

(3) Small amounts of non-hydrocarbons produced with the oil.

Dangerous atmosphere means an atmosphere that:

(1) May expose personnel to the risk of death, incapacitation, injury, or acute illness; or

(2) May impair ability to escape from the atmosphere unaided.

Deepwater port:

(1) Means any fixed or floating manmade structures other than a vessel, or any group of structures, located beyond State seaward boundaries that are used or are intended for use as a port or terminal for the transportation, storage, or further handling of oil or natural gas for transportation to any State, except as otherwise provided in the Deepwater Port Act of 1974, as amended, and for other uses not inconsistent with the purposes of the Deepwater Ports Act, including transportation of oil or natural gas from the United States' OCS;

(2) Includes all components and equipment, including pipelines, pumping stations, service platforms, buoys, mooring lines, and similar facilities, to the extent that they are located seaward of the high water mark;

(3) Includes, in the case of natural gas, all components and equipment, including pipelines, pumping or compressor stations, service platforms, buoys, mooring lines, and similar facilities which are proposed and/or approved for construction and operation as part of the deepwater port, to the extent that they are located seaward of the high water mark and do not include interconnecting facilities; and

(4) Must be considered a ''new source'' for purposes of the Clean Air Act, as amended (codified at 42 U.S.C. 7401 *et seq.*), and the Federal Water Pollution Control Act, as amended (codified at 33 U.S.C. 1251 *et seq.*).

District commander means an officer who commands a Coast Guard district described in part 3 of this chapter, or that individual's authorized representative.

Emergency medical technician means a person trained and certified to appraise and initiate the administration of emergency care for victims of trauma or acute illness before or during transportation of the victims to a health care facility via ambulance, aircraft or vessel.

Engineering hydrographic survey means a detailed geological analysis of seabed soil samples performed to determine the physical composition, for example the mineral content, and structural integrity for the installation of offshore components and structures.

Governor means the governor of a State or the person designated by State law to exercise the powers granted to the governor under the Act.

Gross under keel clearance means the distance between the keel of a tanker and the ocean bottom when the tanker is moored or anchored in calm water free of wind, current, or tide conditions that would cause the tanker to move.

Hose string means the part of a single point mooring connection for oil or natural gas transfer made out of flexible hose of the floating or float/sink type that connects the tanker's manifold to the single point mooring.

Hot work means work that produces heat or fire, such as riveting, welding, burning, or other fire-or spark-producing operations.

Lease block means an area established either by the Secretary of the Interior under section 5 of the OCS Lands Act, 43 U.S.C. 1334, or by a State under section 3 of the Submerged Lands Act, 43 U.S.C. 1311.

License means a license issued under this part to own, construct, and operate a deepwater port.

Licensee means a citizen of the United States holding a valid license for the ownership, construction, and operation of a deepwater port that was issued, transferred, or renewed under this subchapter.

Marine environment includes:

(1) The coastal environment, waters of the contiguous zone, the Exclusive Economic Zone, and the high seas;

(2) Fish, wildlife, and other living resources of those waters; and

(3) The recreational and scenic values of those waters and resources.

Marine site means the area in which the deepwater port is located, including the safety zone and all areas seaward of the high water mark in which associated components and equipment of the deepwater port are located.

Maritime Administration or *MARAD* means the Administrator of the Maritime Administration or that person's designees, and includes the Associate Administrator, Port, Intermodal and Environmental Activities, Maritime Administration, or that individual's authorized representative, at 400 Seventh Street, SW., Washington, DC 20590, telephone 202–366–4721.

Metering platform means a manned or unmanned platform consisting of either a fixed or floating structure that serves as an interchange site for measuring the rate of transfer of natural gas from vessel to pipeline.

Natural gas means either natural gas, unmixed, or any mixture of natural or artificial gas, including compressed or liquefied natural gas.

Natural gas liquids means liquid hydrocarbons associated with or extracted from natural gas, for example ethane, propane and butane extracted from natural gas.

Net under keel clearance means the distance between the keel of a tanker and the ocean bottom when the tanker is underway, anchored, or moored, and subject to actual wind, waves, current, and tide motion.

No anchoring area or NAA means a routing measure comprising an area within defined limits where anchoring is hazardous or could result in unacceptable damage to the marine environment. Anchoring in a no anchoring area should be avoided by all vessels or certain classes of vessels, except in case of immediate danger to the vessel or the person on board.

Officer in Charge of Marine Inspection or *OCMI* means an individual who commands a marine inspection zone described in part 3 of this chapter, and who is immediately responsible for the performance of duties with respect to inspections, enforcement, and administration of regulations governing a deepwater port.

Offshore competent person means an individual trained and designated by his or her employer in matters relating to confined space pre-entry testing and certification at a deepwater port, prior to entry. An offshore competent person should demonstrate proficiency in the following criteria:

(1) Hazard description and recognition;

(2) Hazard evaluation and measurement;

(3) Hazard prevention;

(4) Control and elimination; and

(5) Practical application simulation.

Oil means petroleum, crude oil, and any substance refined from petroleum or crude oil.

Operator means the person who is licensed under 33 U.S.C. 1503 to own, construct, and operate a deepwater port, or that person's designee.

Person means an individual, a public or private corporation, a partnership or other association, or a government entity.

Person in Charge (PIC) means an individual designated as a person in charge of transfer operations under § 154.710 for oil facilities or § 127.301 for liquefied natural gas (LNG) facilities. Within this subchapter, other references to person in charge, without the use of the acronym PIC, will mean a person in charge of an operation other than transfer operations.

Personnel means individuals who are employed by licensees, operators, contractors, or subcontractors, and who are on a deepwater port because of their employment.

Pipeline end manifold means the pipeline end manifold at a single point mooring.

Platform means a fixed for floating structure that rests on or is embedded in the seabed or moored in place and that has floors or decks where an activity or specific function may be carried out.

Pumping platform complex means a platform or a series of interconnected platforms, exclusive of a deepwater port, consisting of one or more single point moorings or submerged turret loading buoys that can pump oil or natural gas and that has one or more of the following features or capabilities:

(1) Can handle the mooring and loading of small vessels;

(2) Has berthing and messing facilities; and

(3) Has a landing area for helicopters.

Reconnaissance hydrographic survey means a scientific study of fresh and saltwater bodies, currents and water content, cultural resources, seabed soils and subsea conditions, for example existing pipelines or subsea wells. A visual representation of the survey findings is normally depicted on a chart of the examined area.

Routing systems means any system of one or more vessel routes or routing measures aimed at reducing the risk of casualties. It includes traffic separation schemes, two-way routes, recommended tracks, areas to be avoided, no anchoring areas, inshore traffic zones, roundabouts, precautionary areas and deepwater routes.

Safety zone means a safety zone established around a deepwater port under part 150, subpart J, of this chapter. The safety zone may extend to a maximum distance of 500 meters (approximately 1,640 feet) around the facility, measured from each point on its outer edge or from its construction site, except as authorized by generally accepted international standards or as recommended by the International Maritime Organization. However, the

zone may not interfere with the use of recognized sea lanes.

Single point mooring or *SPM* means an offshore berth that links an undersea pipeline to a moored tanker and allows for the transfer of oil or natural gas between the tanker and the pipeline.

Single point mooring oil transfer system or *SPM–OTS* means the part of the oil transfer system from the pipeline end manifold to the end of the hose string that connects to the tanker's manifold.

Single (or multiple) point mooring natural gas transfer system or *SPM–NGTS* (or MPM–NGTS) means the part of the natural gas transfer system from the pipeline end manifold to the end of the hose string that connects to the tanker's manifold.

State includes each State of the United States, the District of Columbia, the Commonwealth of Puerto Rico, and the territories and possessions of the United States.

Support vessel means a vessel working for a licensee at a deepwater port or cleared by a licensee to service a tanker calling at a deepwater port, and includes a:

(1) Tug;

(2) Line-handling boat;

(3) Crew boat;

(4) Supply vessel;

(5) Bunkering vessel;

(6) Barge; or

(7) Other similar vessel.

Survival craft means a craft described in § 149.303 of this subchapter.

Tanker means a vessel that calls at a deepwater port to unload oil or natural gas.

Vessel means every description of watercraft, including non-displacement craft e.g., wing-in-ground (WIG) craft, seaplanes) capable of being used, as a means of transportation on or through the water.

[USCG–1998–3884, 71 FR 57651, Sept. 29, 2006, as amended by USCG–2010–0351, 75 FR 36284, June 25, 2010; USCG–2013–0397, 78 FR 39175, July 1, 2013]

§ 148.8 How are certifying entities designated and used for purposes of this subchapter?

(a) Applicants and licensees may nominate a certifying entity (CE) for the performance of tasks for which the Coast Guard is responsible under this subchapter.

(b) Nominations may be made at any time after the Maritime Administration issues a record of decision approving the application, and must include the following information for each nominee:

(1) The specific functions or tasks to be performed by the nominee;

(2) Name and address;

(3) Size and type of organization or corporation;

(4) Previous experience as a CE, certified verification agent, or similar third-party representative;

(5) Experience in design, fabrication, or installation of fixed offshore oil and gas platforms, similar fixed, floating, or gravity-based structures and project-related structures, systems, and equipment;

(6) Technical capabilities, including professional certifications and organizational memberships of the nominee or the primary staff to be associated with the CE's duties for the specific project;

(7) In-house availability of, or access to, appropriate technology such as computer modeling programs and hardware or testing materials and equipment;

(8) Ability to perform and effectively manage the duties for which it is nominated considering current resource availability;

(9) Previous experience with regulatory requirements and procedures;

(10) A statement signed by the nominee's chief officer or that person's designee that the nominee:

(i) Is not owned or controlled by the designer, manufacturer, or supplier of any equipment, material, system, or subsystem that would be the subject of the nominee's duties, or by any manufacturer of similar equipment or material; and that

(ii) The nominee will allow access to an official representative of the Coast Guard, upon request, to facilities or records that relate to its duties; and

(11) A list of documents and certifications to be furnished to the Coast Guard by the nominee.

(c) The Commandant (CG–5P) may accept or reject the nomination of a CE

and will provide guidance and oversight to each CE. The Commandant (CG–5P) may terminate the acceptance of a CE at any time.

[USCG–1998–3884, 71 FR 57651, Sept. 29, 2006, as amended by USCG–2013–0397, 78 FR 39175, July 1, 2013]

Subpart B—Application for a License

§ 148.100 What is the purpose of this subpart?

This subpart describes how to apply for a license to own, construct, and operate a deepwater port.

§ 148.105 What must I include in my application?

Your application must include the information required by this section.

(a) *General*. For each applicant, affiliate, and consultant:

(1) The name, address, telephone number, citizenship, and principal business activity of the applicant and its affiliates;

(2) The name, address, and principal business activity of each subsidiary, division of the applicant, or its affiliates that participated in the decision to apply for a license to build a deepwater port;

(3) A description of how each affiliate is associated with the applicant, and of the ownership interest each affiliate has in the applicant;

(4) A list of the applicant's corporate officers and directors, and each affiliate that participated in the decision to apply for a license;

(5) A statement for each applicant or affiliate, providing complete and detailed information on any civil or criminal legal proceeding during the preceding 5 years that relates to, or that could materially affect, information in the license application; and,

(6) A declaration by the applicant that neither the applicant nor its affiliate has engaged in any lobbying activities that are prohibited by 31 U.S.C. 1352 or any other applicable Federal anti-lobbying statute.

(b) *Experience in matters relating to deepwater ports*. (1) A description of the applicant's, affiliate's, and consultant's experience in offshore operations, particularly operations involving the transfer and storage of liquid cargo, and the loading and unloading of vessels.

(2) For each affiliate that has a significant contract with the applicant for construction of the deepwater port, a description of that affiliate's experience in construction of marine terminal facilities, offshore structures, underwater pipelines, and seabed foundations; in addition to a description of other experiences that would bear on the affiliate's qualification to participate in the construction of a deepwater port.

(c) *Engineering firms*. For each engineering firm, if known, that will design the deepwater port or a portion of the port, the application must include the firm's:

(1) Name;

(2) Address;

(3) Citizenship;

(4) Telephone number; and

(5) Qualifications.

(d) *Citizenship and operating authority*. For each applicant or group of applicants, provide:

(1) An affidavit that the applicant is a citizen of the United States;

(2) For State agency applicants, the law authorizing the applicant to undertake the operations detailed in the application;

(3) For private corporation applicants, the current charter or certificate of incorporation and current by-laws; and affidavits of U.S. or foreign citizenship from the president, chairman of the board, and each director or their equivalents; for limited liability companies, the equivalent organizational documents, and affidavits from the members of the Board of Managers, and members; and

(4) For partnerships, including limited liability partnerships, or associations not formed or owned solely by individual citizens of the United States, the certificate of formation; the partnership agreement or articles of association; the current by-laws; the minutes of the first board meeting; and affidavits of U.S. or foreign citizenship from the president and each director, or their equivalents.

(e) *Address for service of documents*. The name and address of one individual who may be served with documents if a

formal hearing is held concerning the application, and the name and address of one individual who may receive other documents.

(f) *Location and use.* The proposed location and capacity of the deepwater port, a general description of the anticipated use of the deepwater port, and whether access will be open or closed.

(g) *Financial information.* (1) For the applicant, each affiliate with an ownership interest in the applicant of greater than 3 percent, and affiliates which have a direct contractual relationship with the deepwater port:

(i) Annual financial statements, audited by an independent certified public accountant, for the previous 3 years, including, but not limited to, an income statement, balance sheet, and cash flow statement with footnote disclosures prepared according to U.S. Generally Accepted Accounting Principles; provided, however, that the Commandant (CG–5), in concurrence with MARAD, may waive this requirement upon finding:

(A) That the affiliate does not, in the normal course of business, produce audited statements; and

(B) That the affiliate is part of a larger corporate group whose audited statement provides sufficient information to support an adequate assessment of the affiliate's relationship with and impact on the applicant; and

(ii) Interim income statements and balance sheets for each quarter that ends at least 30 days before submission of the application, unless it is included in the most recent annual financial statement.

(2) An estimate of construction costs, including:

(i) A phase-by-phase breakdown of costs;

(ii) The estimated completion dates for each phase; and

(iii) A preliminary estimate of the cost of removing all of the deepwater port marine components, including pipelines that lie beneath the seabed. The operator of a deepwater port is responsible for the costs associated with removal of all deepwater port components. Should a license be granted, MARAD will require a bond, guarantee, or other financial instrument to cover the complete cost of decommissioning as a condition of the license.

(3) Annualized projections or estimates, along with the underlying assumptions, for the next 5 years and at reasonable intervals throughout the life of the deepwater port, of each of the following:

(i) Total oil or natural gas throughput, and subtotals showing throughput owned by the applicant and its affiliates and throughput owned by others;

(ii) Projected financial statements, including a balance sheet and income statement; and

(iii) Annual operating expenses, showing separately any payment made to an affiliate for any management duties carried out in connection with the operation of the deepwater port.

(4) A copy of all proposals or agreements concerning the management and financing of the deepwater port, including agreements relating to throughputs, capital contributions, loans, guarantees, commitments, charters, and leases.

(5) The throughput reports for the calendar year preceding the date of the application, for the applicant and each of the applicant's affiliates engaged in producing, refining, or marketing oil or natural gas and natural gas liquids, along with a copy of each existing or proposed throughput agreement. Each throughput report must list the throughput of the following products:

(i) Crude oil; and if crude oil is the only product the port is designed to transport, the throughput report may be limited to reporting crude oil;

(ii) Gasoline;

(iii) Jet aviation fuel;

(iv) Distillate fuel oils;

(v) Other refinery products;

(vi) Natural gas; and

(vii) Natural gas liquids.

(h) *Construction contracts and construction-related studies.* (1) A copy of each contract that the applicant made for the construction of any component of the deepwater port or for the operation of the port.

(2) A listing and abstract of:

(i) All completed or ongoing studies on deepwater ports conducted by or for the applicant; and

(ii) All other construction-related studies used by the applicant.

(3) The identity of each contractor, if known, that will construct or install the deepwater port or a portion of the port, including each firm's:

(i) Name;

(ii) Address;

(iii) Citizenship;

(iv) Telephone number; and

(v) Qualifications.

(i) *Compliance with Federal water pollution requirements.*

(1) Evidence, to the extent available, that the requirements of section 401(a)(1) of the Federal Water Pollution Control Act Amendments of 1972, 33 U.S.C. 1341(a)(1), will be satisfied. If complete information is not available by the time MARAD must either approve or deny the application under 33 U.S.C. 1504(i)(1), the license for the deepwater port is conditioned upon the applicant demonstrating that the requirements of section 401(a)(1) of the Federal Water Pollution Control Act Amendments of 1972, 33 U.S.C. 1341(a)(1), will be satisfied.

(2) In cases where certification under 33 U.S.C. 1341(a)(1) must be obtained from the Environmental Protection Agency Administrator, the request for certification, and pertinent information, such as plume modeling, related to the certification.

(j) *Coastal zone management.* A request for each certification required by section 307 of the Coastal Zone Management Act of 1972, 16 U.S.C. 1456, as amended.

(k) *Identification of lease block.* (1) Identification of each lease block where any part of the proposed deepwater port or its approaches is located. This identification must be made on official Outer Continental Shelf leasing maps or protraction diagrams, where available. Each map and diagram must be certified by a professional surveyor. For each lease block, provide the following:

(i) A description of each pipeline, or other right-of-way crossing, in enough detail to allow plotting of the rights-of-way to the nearest one-tenth of a second in latitude and longitude; and

(ii) The identity of the lessee or grantee of each pipeline or other right-of-way.

(2) Detailed information concerning any interest that anyone, including the applicant, has in each block.

(3) Detailed information concerning the present and planned use of each block.

(l) *Overall site plan.* Single-line drawings showing the location and type of each component of the proposed deepwater port and its necessary facilities, including:

(1) Floating structures;

(2) Fixed structures;

(3) Aids to navigation;

(4) Manifold systems; and

(5) Onshore storage areas, pipelines, and refineries.

(m) *Site plan for marine components.* A site plan consisting of the following:

(1) The proposed size and location of all:

(i) Fixed and floating structures and associated components seaward of the high water mark, only if the proposal does not involve a connected action, for example, installation of new pipeline extending inshore of the state boundary line;

(ii) Recommended ships' routing measures and proposed vessel traffic patterns in the deepwater port area, including aids to navigation; and

(iii) Recommended anchorage areas and, for support vessels, mooring areas; and

(2) A reconnaissance hydrographic survey of the proposed marine site. This survey should provide data on the water depth, prevailing currents, cultural resources, and a general characterization of the sea bottom. A requirement to submit an engineering hydrographic survey of the final marine site will be imposed as a condition in the license. The latter survey will require more extensive analysis of the soil, and detailed study to determine its physical composition, such as minerals, and if the sea bottom can support fixed components comprising a deepwater port. The applicant may submit existing data, gathered within the previous 5 years, but it must be supplemented by field data for the specific locations in which a high degree of variability exists.

(n) *Soil data.* An analysis of the general character and condition of the ocean bottom, sub-bottom, and upland

soils throughout the marine site. The applicant may use existing data, so long as it was collected within the last 5 years and continues to provide accurate information about conditions throughout the site. If not, a new survey must be completed to provide supplemental data. The analysis must include an opinion by a registered professional engineer specializing in soil mechanics concerning:

(1) The suitability of the soil to accommodate the anticipated design load of each marine component that will be fixed to or supported on the ocean floor; and

(2) The stability of the seabed when exposed to environmental forces resulting from severe storms or lesser forces that occur over time, including any history of accretion or erosion of the coastline near the marine site.

(o) *Archeological information*. An analysis of the information from the reconnaissance hydrographic survey by a qualified underwater archeologist to determine the historical or other significance of the area where the site evaluation and pre-construction testing activities were conducted. The analysis must meet standards established by the Bureau of Ocean Energy Management (BOEM) for activities on the Outer Continental Shelf, or an alternative standard that has been submitted to and approved by the Coast Guard. The survey must include the areas potentially affected by the deepwater port, or any other associated platforms, and its pipeline routes.

(p) *Vessel information*. (1) The nation of registry for, and the nationality or citizenship of, officers and crew serving on board vessels transporting natural gas that are reasonably anticipated to be servicing the deepwater port; and

(2) Description of the information that will be provided in the operations manual pertaining to vessel operations, vessel characteristics, and weather forecasting.

(q) *Information on floating components*. (1) A description and preliminary design drawing of each floating component, including the hoses, anchoring or securing structure, and navigation lights if the component is a mooring buoy.

(2) The criteria, developed under part 149 of this chapter, to which each floating component will be designed and built.

(3) The design standards and codes to be used.

(4) The title of each recommended engineering practice that will be applied.

(5) A description of safety, firefighting, and pollution prevention equipment to be used on each floating component.

(6) A description of the lighting that will be used on floating hoses, for night detection.

(r) *Information on dedicated fixed offshore components*. (1) A description and preliminary design drawing for each dedicated fixed offshore component.

(2) The design criteria, developed under part 149 of this chapter, to which each fixed offshore component will be designed and built.

(3) The design standards and codes to be used.

(4) The title of each recommended engineering practice to be followed.

(5) A description of the following equipment that will be installed:

(i) Navigational lighting;

(ii) Safety equipment;

(iii) Lifesaving equipment;

(iv) Firefighting equipment;

(v) Pollution prevention equipment, excluding response equipment which must be outlined in the facility response plan; and

(vi) Waste treatment equipment.

(6) A description and preliminary design drawing of the following:

(i) The cargo pumping equipment;

(ii) The cargo piping system;

(iii) The control and instrumentation system; and

(iv) Any associated equipment, including equipment for oil or natural gas throughput measuring, leak detection, emergency shutdown, and the alarm system.

(7) The personnel capacity of each deepwater port pumping platform complex.

(s) *Refurbished Outer Continental Shelf facilities and co-located fixed offshore components*. (1) A description and preliminary design drawing for each such facility or component.

(2) The design criteria, developed under part 149 of this chapter, to which

each facility or component will be designed and built or modified;

(3) The design standards and codes to be used;

(4) The title of each recommended engineering practice to be followed;

(5) A description of the following equipment to be installed or refurbished:

(i) Navigational lighting;

(ii) Safety equipment;

(iii) Lifesaving equipment;

(iv) Firefighting equipment;

(v) Pollution prevention equipment, excluding response equipment which must be outlined in the facility response plan;

(vi) Waste treatment equipment; and

(vii) Cathodic protection.

(6) A description and preliminary design drawing of the following:

(i) The cargo pumping equipment;

(ii) The cargo piping system;

(iii) The control and instrumentation system; and

(iv) Any associated equipment, including equipment for oil or natural gas throughput measuring, leak detection, emergency shutdown, and the alarm system.

(7) The personnel capacity of each deepwater port pumping platform complex.

(t) *Information on offshore pipelines.* (1) A description and preliminary design drawing of the marine pipeline, including:

(i) Size;

(ii) Throughput capacity;

(iii) Length;

(iv) Depth of cover; and

(v) Protective devices.

(2) The design criteria to which the marine pipeline will be designed and built.

(3) The design standards and codes to be used.

(4) The title of each recommended engineering practice to be followed.

(5) A description of the metering system that will measure flow rate.

(6) Information concerning all submerged or buried pipelines that will be crossed by the offshore pipeline, and how each crossing will be made.

(7) Information on the pipeline that will connect to the deepwater port, including a detailed analysis that shows throughput and capacity rates of all pipelines involved in the transport of product to shore.

(u) *Information about onshore components.* To the extent known by the applicant:

(1) A description of the location, capacity, and ownership of all planned and existing onshore pipelines, storage facilities, refineries, petrochemical facilities, and transshipment facilities that will be served by the deepwater port. Crude oil or natural gas gathering lines and lines wholly within a deepwater port must be included in data about onshore components only if specifically required. Entry points and major connections between lines and with bulk purchasers must be included.

(2) A chart showing the location of all planned and existing facilities that will be served by the deepwater port, including:

(i) Onshore pipelines;

(ii) Storage facilities;

(iii) Refineries;

(iv) Petrochemical facilities; and

(v) Transshipment facilities.

(3) A copy of all proposals or agreements with existing and proposed refineries that will receive oil transported through the deepwater port, the location and capacity of each such refinery, and the anticipated volume of such oil to be refined by each such refinery.

(v) *Information on miscellaneous components.* (1) A description of each radio station or other communications facility to be used during construction and operation of the deepwater port and its proposed concept of operation.

(2) A description of the radar navigation system to be used in operation of the deepwater port outlined in the operations manual.

(3) A description of the method that will be used for bunkering vessels using the deepwater port.

(4) A brief description of the type, size, and number of vessels that will be used in bunkering, mooring, and servicing the vessels using the deepwater port.

(5) A description and location of the shore-based support facilities, if any, that will be provided for vessels that will be used in bunkering, mooring, and servicing the vessels using the deepwater port; or that serve as offices or

facilities in support of the deepwater port operations.

(6) A copy of the actual radio station license, or, if not available, a copy of the application sent to the Federal Communications Commission, if available.

(w) *Construction procedures.* A description of the method and procedures to be used in constructing each component of the deepwater port, for example shoreside fabrication, assembly and support, including anticipated dates of completion for each specific component during each phase of construction.

(x) *Operations manual.* A draft of the operations manual for the proposed deepwater port, containing the information under §150.15 of this subchapter, must demonstrate the applicant's ability to operate the deepwater port safely and effectively. To the extent that circumstances are similar, this demonstration can be in the form of evidence appended to the draft operations manual of the applicant's participation in the safe and effective management or operation of other offshore facilities, for example, evidence of compliance with BOEM requirements for those facilities. If the information required for the manual is not available, state why it is not and when it will be available.

(y) *Risk and consequence assessment.* Data to support an independent, site-specific analysis to assess the risks and consequences of accidental and intentional events that compromise cargo containment. At minimum, potential events that result in liquefied natural gas or oil spill, vapor dispersion and/or fire will be analyzed. The Coast Guard will utilize validated models, for example computational fluid dynamics or an equivalent model. The applicant may consult with Commandant (CG–5) to ensure that appropriate assessment procedures are used.

(z) *Environmental evaluation.* An analysis, sufficient to meet the requirements of the National Environmental Policy Act, and as outlined in subpart G of this part, of the potential impacts on the natural and human environments, including sufficient information that complies with all applicable Federal, tribal, and State requirements for the protection of the environment.

(aa) *Aids to navigation.* (1) For each proposed aid to navigation, the proposed position of the aid, described by latitude and longitude coordinates to the nearest second or tenth of a second, as determined from the largest scale chart of the area in which the aid is to be located. Specify latitude and longitude to a level obtained by visual interpolation between the finest graduation of the latitude and longitude scales on the chart.

(2) For each proposed obstruction light and rotating lit beacon:

(i) Color;

(ii) Characteristic;

(iii) Effective intensity;

(iv) Height above water; and

(v) General description of the illumination apparatus.

(3) For each proposed sound signal on a structure, a general description of the apparatus.

(4) For each proposed buoy:

(i) Shape;

(ii) Color;

(iii) Number or letter;

(iv) Depth of water in which located; and

(v) General description of any light and/or sound signal apparatus on the buoy.

(5) For the proposed radar beacon, or RACON, height above water and a general description of the apparatus.

(bb) *National Pollutant Discharge Elimination System (NPDES).* A copy of the NPDES Application for Permit to Discharge Short Form D, for applying for a discharge permit from the Environmental Protection Agency (EPA) and any accompanying studies and analyses. If complete information is not available by the time MARAD must either approve or deny the application for a designated application area under 33 U.S.C. 1504(i)(1), the license for the deepwater port is conditioned upon the applicant receiving the required discharge permit from the EPA before the start of any discharge requiring such a permit. The issuance of the permit demonstrates that all potential water discharges have been satisfactorily analyzed and water quality control measures implemented to mitigate discharges to meet NPDES.

(cc) *Structures' placement and the discharge of dredged or fill material.* The information required to obtain a Department of the Army permit for placement of structures and the discharge of dredged or fill material.

(dd) *Additional Federal authorizations.* All other applications for Federal authorizations not listed elsewhere in this subpart that are required for ownership, construction, and operation of a deepwater port.

(ee) *Sworn statement.* A statement that the information in the application is true must be placed at the end of the application, sworn to before a notary public, and signed by a responsible applicant official.

[USCG–1998–3884, 71 FR 57651, Sept. 29, 2006, as amended by USCG–2011–0257, 76 FR 31837, June 2, 2011; USCG–2013–0397, 78 FR 39175, July 1, 2013]

§ 148.107 What additional information may be required?

(a) The Commandant (CG–5P), in coordination with MARAD, may require the applicant or the applicant's affiliates to file, as a supplement to the application, any analysis, explanation, or other information the Commandant (CG–5P) deems necessary.

(b) The Commandant (CG–5P) may require the applicant or the applicant's affiliates to make available for Coast Guard examination, under oath or for interview, persons having, or believed to have, necessary information.

(c) The Commandant (CG–5P) may set a deadline for receiving the information.

(1) If the applicant states that the required information is not yet available but will be at a later date, the Commandant (CG–5P) may specify a later deadline.

(2) If a requirement is not met by a deadline fixed under this paragraph, the Commandant (CG–5P), in coordination with MARAD, may determine whether compliance with the requirement is important to processing the application within the time prescribed by the Act.

(3) If the requirement is important to processing the application within the time limit set by the Act, the Commandant (CG–5P) may recommend to the Maritime Administrator that he or she either not approve the application or suspend it indefinitely. The deadline for the Administrator's review under the Act is extended for a period of time equal to the time of the suspension.

[USCG–1998–3884, 71 FR 57651, Sept. 29, 2006, as amended by USCG–2013–0397, 78 FR 39176, July 1, 2013]

§ 148.108 What if a Federal or State agency or other interested party requests additional information?

(a) Any Federal or State agency or other interested person may recommend that the applicant provide information that is not specified by this subchapter.

(b) Recommendations must state briefly why the information is needed.

(c) The Commandant (CG–5P) must receive the request prior to the closing dates for the comment periods for scoping, and the draft or final environmental impact statement or environmental assessment. MARAD will consider the request before making a final decision on whether or not to approve the license application.

(d) The Commandant (CG–5P) will consider whether:

(1) The information requested is essential for processing the license application; and

(2) The time and effort required by the applicant in gathering the information will result in an undue delay in the application process.

(e) The Commandant (CG–5P) may discuss the recommendation with the recommending person and the applicant prior to issuing a determination.

[USCG–1998–3884, 71 FR 57651, Sept. 29, 2006, as amended by USCG–2013–0397, 78 FR 39176, July 1, 2013]

§ 148.110 How do I prepare my application?

(a) Any person may confer with the Commandant (CG–5P) concerning requirements contained in this part for the preparation of an application or the requirements of this subchapter.

(b) The applicant may incorporate, by clear and specific reference in the application:

(1) Standard reference material that the applicant relied on that is readily available to Federal and State agencies;

(2) Current information contained in previous applications or reports that the applicant has submitted to the application staff; or

(3) Current information contained in a tariff, report, or other document previously filed for public record with the Surface Transportation Board or the Securities and Exchange Commission, if:

(i) A certified true and complete copy of the document is attached to each copy of the application as required by § 148.115(a) of this part;

(ii) The date of filing and the document number are on the cover of the document; and

(iii) Any verification or certification required for the original filing, other than from auditors or other independent persons, is dated no earlier than 30 days before the date of the application.

[USCG–1998–3884, 71 FR 57651, Sept. 29, 2006, as amended by USCG–2013–0397, 78 FR 39176, July 1, 2013]

§ 148.115 How many copies of the application must I send and where must I send them?

Send the following copies of the application:

(a) Two printed copies and three electronic versions to the Commandant (CG–5P), 2100 2nd St., SW., Stop 7126, Washington, DC 20593–7126.

(b) Two printed copies and two electronic versions to the MARAD Administrator, 400 7th Street SW., Washington, DC 20590.

(c) One copy to the U.S. Army Corps of Engineers District Office having jurisdiction over the proposed deepwater port. For the address, see *http://www.usace.army.mil/*.

(d) Additional printed and electronic copies for distribution to Federal, tribal, and State regulatory agencies involved in reviewing the application in accordance with the needs of each agency.

[USCG–1998–3884, 71 FR 57651, Sept. 29, 2006, as amended by USCG–2010–0351, 75 FR 36284, June 25, 2010; USCG–2013–0397, 78 FR 39176, July 1, 2013]

§ 148.125 What are the application fees?

(a) The applicant must submit a nonrefundable application fee of $350,000 with each application for a license. If additional information is necessary to make an application complete, no additional application fee is required.

(b) The costs incurred by the Federal Government in processing an application will be charged to the application fee until it is exhausted. If the fee is exhausted and the Federal Government incurs further processing costs, the applicant will be charged for the additional costs. The Commandant (CG–5P) will periodically advise the applicant of the status of expenses incurred during the application process.

(c) Additional costs attributable to processing a deepwater port license application and post-license activities, for example the engineering plan review or development of the final operations manual, are due when they are assessed, and must be paid by the applicant prior to commencing operation of the deepwater port.

(d) Application fees and additional costs assessed under this section must be made payable to the United States Treasury, and submitted to the Commandant (CG–5P).

[USCG–1998–3884, 71 FR 57651, Sept. 29, 2006, as amended by USCG–2013–0397, 78 FR 39176, July 1, 2013]

Subpart C—Processing Applications

GENERAL

§ 148.200 What is the purpose of this subpart?

This subpart prescribes the requirements for processing an application for a deepwater port license.

It includes the procedures for:

(a) Maintaining the docket;

(b) Designating Adjacent Coastal States;

(c) Holding informal and formal public hearings; and

(d) Approving or denying an application.

[USCG–1998–3884, 71 FR 57651, Sept. 29, 2006, as amended by USCG–2013–0397, 78 FR 39176, July 1, 2013]

§ 148.205 How are documents related to the application maintained?

(a) The Commandant (CG–5P) maintains the docket for each application.

(1) The docket contains a copy of all documents filed or issued as part of the application process.

(2) Recommendations submitted by Federal departments and agencies under 33 U.S.C. 1504(e)(2) are docketed when they are received.

(3) Copies of applicable National Environmental Policy Act documents prepared under 33 U.S.C. 1504(f) are docketed when they are sent to the Environmental Protection Agency.

(b) For a document designated as protected from disclosure under 33 U.S.C. 1513(b), the Commandant (CG–5P):

(1) Prevents the information in the document from being disclosed, unless the Commandant (CG–5P) states that the disclosure is not inconsistent with 33 U.S.C. 1513(b); and

(2) Keeps a record of all individuals who have a copy of the document.

[USCG–1998–3884, 71 FR 57651, Sept. 29, 2006, as amended by USCG–2013–0397, 78 FR 39176, July 1, 2013]

§ 148.207 How and where may I view docketed documents?

(a) All material in a docket under § 148.205 of this part is available to the public for inspection and copying at Commandant (CG–5P) at the address under ''Commandant (CG–5P)'' in § 148.5 of this part, except for—

(1) Contracts under 33 U.S.C. 1504(c)(2)(B) for the construction or operation of a deepwater port; and

(2) Material designated under paragraph (b) of this section as a trade secret, or commercial or financial information that is claimed to be privileged or confidential.

(b) A person submitting material that contains either a trade secret or commercial or financial information under paragraph (a)(2) of this section must designate those portions of the material that are privileged or confidential. Section 148.221 contains procedures for objecting to these claims.

(c) Docketed material for each deepwater port project is also available to the public electronically at the Federal Docket Web site at *www.regulations.gov*. The projects are also listed by name and the assigned docket number at the CG–OES–4 Web site: *http://www.uscg.mil/hq/cg5/cg522/cg5225*.

[USCG–1998–3884, 71 FR 57651, Sept. 29, 2006, as amended by USCG–2013–0397, 78 FR 39176, July 1, 2013]

§ 148.209 How is the application processed?

The Commandant (CG–5P), in cooperation with MARAD, processes each application and MARAD publishes the notice of application under 33 U.S.C. 1504(c) in the FEDERAL REGISTER. Upon publication of a notice of application, the Commandant (CG–5P) ensures delivery of copies of the application to—

(a) Each Federal agency with jurisdiction over any aspect of ownership, construction, or operation of deepwater ports. A complete listing of the Federal agencies involved with deepwater port licensing is outlined in the Deepwater Port Interagency MOU available at the following hyperlink: *http://www.uscg.mil/hq/G-M/mso/docs/dwp__white__house__task__force__energy__streamlining.pdf*.

(b) Each Adjacent Coastal State, including relevant State and tribal agencies in those Adjacent Coastal States.

[USCG–1998–3884, 71 FR 57651, Sept. 29, 2006, as amended by USCG–2013–0397, 78 FR 39176, July 1, 2013]

§ 148.211 What must I do if I need to change my application?

(a) If at any time before the Secretary approves or denies an application, the information in it changes or becomes incomplete, the applicant must promptly submit the changes or additional information in the manner set forth in § 148.115 of this part.

(b) The Coast Guard may determine that the change or required information is of such magnitude that it warrants submission of a complete revised application.

§ 148.213 How do I withdraw my application?

The applicant may withdraw an application at any time before the proceeding is terminated by delivering or

mailing notice of withdrawal to the Commandant (CG–5P) for docketing.

[USCG–1998–3884, 71 FR 57651, Sept. 29, 2006, as amended by USCG–2013–0397, 78 FR 39176, July 1, 2013]

§ 148.215 What if a port has plans for a deep draft channel and harbor?

(a) If a State port will be directly connected by pipeline to a proposed deepwater port, and has existing plans for a deep draft channel and harbor, a representative of the port may request a determination under 33 U.S.C. 1503(d).

(b) The request must be sent, in writing, to the Commandant (CG–5P) within 30 days after the date that the notice of application for the deepwater port is published in the FEDERAL REGISTER.

(c) The request must contain:

(1) A signature of the highest official of the port submitting the request;

(2) A copy of the existing plans for the construction of a deep draft channel and harbor;

(3) Certification that the port has an active study by the Secretary of the Army for the construction of a deep draft channel and harbor, or that the port has an application pending for a permit under 33 U.S.C. 403 for the construction;

(4) Any available documentation on:

(i) Initial costs, by phases if development is staged, for the proposed onshore project, including dredging, ship terminal, and attendant facilities;

(ii) Estimated annual operating expenses, by phases if development is staged, including labor, for 30 years for all elements of the project;

(iii) Estimated completion time for all elements of the project;

(iv) Estimated vessel traffic volume, and the volume and variety of the tonnage;

(v) Potential traffic congestion conditions in the port, and the port's ability to control vessel traffic as a result of the proposed dredging project;

(vi) Estimated economic benefits of the project, including:

(A) Economic contribution to the local and regional area;

(B) Induced industrial development;

(C) Increased employment; and

(D) Increases in tax revenues;

(vii) Environmental and social impacts of the project on the local and regional community; and

(viii) An estimate of the economic impact that the deepwater port license will have on the proposed project.

(d) A statement whether the port seeks a determination that the port best serves the national interest.

[USCG–1998–3884, 71 FR 57651, Sept. 29, 2006, as amended by USCG–2013–0397, 78 FR 39176, July 1, 2013]

§ 148.217 How can a State be designated as an Adjacent Coastal State?

(a) Adjacent Coastal States are named in the notice of application published in the FEDERAL REGISTER. However, a State not named as an Adjacent Coastal State in the notice may request to be designated as one if the environmental risks to it are equal to or greater than the risks posed to a State directly connected by pipeline to the proposed deepwater port.

(b) The request must:

(1) Be submitted in writing to the Commandant (CG–5P) within 14 days after the date of publication of the notice of application in the FEDERAL REGISTER;

(2) Be signed by the Governor of the State;

(3) List the facts and any available documentation or analyses concerning the risk of damage to the coastal environment of the State; and

(4) Explain why the State believes the risk of damage to its coastal environment is equal to or greater than the risk to a State connected by a pipeline to the proposed deepwater port.

(c) Upon receipt of a request, the Commandant (CG–5P) will send a copy of the State's request to the Administrator of the National Oceanic and Atmospheric Administration (NOAA) and ask for the Administrator's recommendations within an amount of time that will allow the Commandant (CG–5P) and the MARAD Administrator 45 days from receipt of the request to determine the matter.

(d) If after receiving NOAA's recommendations the Commandant (CG–5P), in concurrence with MARAD Administrator, determines that the State should be considered an Adjacent

Coastal State, the Commandant (CG–5P), in concurrence with the MARAD Administrator, will so designate it. If the Commandant (CG–5P), in concurrence with the MARAD Administrator, denies the request, he or she will notify the requesting State's Governor of the denial.

[USCG–1998–3884, 71 FR 57651, Sept. 29, 2006, as amended by USCG–2013–0397, 78 FR 39176, July 1, 2013]

§ 148.221 How do I claim, or object to a claim, that required information is privileged?

(a) Any person may claim that specific information required pursuant to this part should be withheld because it is privileged, and any person can object to that claim.

(b) Requests or objections must be submitted to the Commandant (CG–5P) in writing, with sufficient specificity to identify the information at issue, and to show why it should or should not be considered privileged.

(c) The Commandant (CG–5P) determines whether to grant or deny a claim of privilege.

(d) Submission of a claim stays any deadline for providing the information at issue, unless the claim is made pursuant to the protection for confidential information that is provided by 33 U.S.C. 1513(b), in which case deadlines are not stayed. The Commandant (CG–5P) may also determine that the information at issue is so material that processing of the application must be suspended pending the determination of the claim.

[USCG–1998–3884, 71 FR 57651, Sept. 29, 2006, as amended by USCG–2013–0397, 78 FR 39176, July 1, 2013]

PUBLIC HEARINGS OR MEETINGS

§ 148.222 When must public hearings or meetings be held?

(a) Before a license is issued, at least one public license hearing under 33 U.S.C. 1504(g) must be held in each Adjacent Coastal State. Other Federal statutes and regulations may impose additional requirements for public hearings or meetings, and if not otherwise prohibited, a hearing under this paragraph may be consolidated with any such additional hearing or meeting.

(b) The Commandant (CG–5) or the MARAD Administrator will publish a notice of public hearings or meetings in the FEDERAL REGISTER, and will mail or deliver a copy of the notice to the applicant, to each Adjacent Coastal State, and to all who request a copy.

(c) Anyone may attend a public hearing or meeting and provide relevant oral or written information. The presiding officer may limit the time for providing oral information.

[USCG–1998–3884, 71 FR 57651, Sept. 29, 2006, as amended by USCG–2013–0397, 78 FR 39176, July 1, 2013]

§ 148.227 How is a public hearing or meeting reported?

(a) After completion of a public hearing or meeting, the presiding officer forwards a report on the hearing or meeting to the Commandant (CG–5P) for docketing.

(b) The report must contain at least:

(1) An overview of the factual issues addressed;

(2) A transcript or recording of the hearing or meeting; and

(3) A copy of all material submitted to the presiding officer.

(c) During the hearing or meeting, the presiding officer announces the information that the report must contain.

[USCG–1998–3884, 71 FR 57651, Sept. 29, 2006, as amended by USCG–2013–0397, 78 FR 39177, July 1, 2013]

FORMAL HEARINGS

§ 148.228 What if a formal evidentiary hearing is necessary?

(a) After all public meetings under § 148.222 of this part are concluded, the Commandant (CG–5P), in coordination with the MARAD Administrator, will consider whether there are one or more specific and material factual issues that may be resolved by a formal evidentiary hearing.

(b) If the Commandant (CG–5P), in coordination with the MARAD Administrator, determines that one or more issues under paragraph (a) of this section exist, the Coast Guard will hold at least one formal evidentiary hearing

under 5 U.S.C. 554 in the District of Columbia.

(c) The Commandant (CG–5P) files a request for assignment of an administrative law judge (ALJ) with the ALJ Docketing Center. The Chief ALJ designates an ALJ or other person to conduct the hearing.

(d) The recommended findings and the record developed in a hearing under paragraph (b) of this section are considered by the MARAD Administrator in deciding whether to approve or deny a license.

[USCG–1998–3884, 71 FR 57651, Sept. 29, 2006, as amended by USCG–2013–0397, 78 FR 39177, July 1, 2013]

§ 148.230 How is notice of a formal hearing given?

(a) The Commandant (CG–5P) publishes a notice of the hearing in the FEDERAL REGISTER and sends a notice of the hearing to the applicant, to each adjacent coastal State, and to each person who requests such a notice.

(b) The notice of the hearing includes the applicant's name, the name of the ALJ assigned to conduct the hearing, a list of the factual issues to be resolved, the address where documents are to be filed, and the address where a copy of the rules of practice, procedure, and evidence to be used at the hearing is available.

[USCG–1998–3884, 71 FR 57651, Sept. 29, 2006, as amended by USCG–2013–0397, 78 FR 39177, July 1, 2013]

§ 148.232 What are the rules for a formal hearing?

(a) The Commandant (CG–5P) determines the rules for each formal hearing. Unless otherwise specified in this part, the Commandant (CG–5P) applies the rules of practice, procedure, and evidence in part 20 of this chapter.

(b) The Commandant (CG–5P) sends a written copy of the procedure to the applicant, each person intervening in the proceedings, and each person who requests a copy.

[USCG–1998–3884, 71 FR 57651, Sept. 29, 2006, as amended by USCG–2013–0397, 78 FR 39177, July 1, 2013]

§ 148.234 What are the limits of an Administrative Law Judge (ALJ)'s jurisdiction?

(a) An ALJ's jurisdiction begins upon assignment to a proceeding.

(b) An ALJ's jurisdiction ends after the recommended findings are filed with the Commandant (CG–5P) or immediately after the ALJ issues a notice of withdrawal from the proceeding.

[USCG–1998–3884, 71 FR 57651, Sept. 29, 2006, as amended by USCG–2013–0397, 78 FR 39177, July 1, 2013]

§ 148.236 What authority does an Administrative Law Judge (ALJ) have?

When assigned to a formal hearing, an ALJ may:

(a) Administer oaths and affirmations;

(b) Issue subpoenas;

(c) Issue rules of procedure for written evidence;

(d) Rule on offers of proof and receive evidence;

(e) Examine witnesses;

(f) Rule on motions of the parties;

(g) Suspend or bar an attorney from representing a person in the proceeding for unsuitable conduct;

(h) Exclude any person for disruptive behavior during the hearing;

(i) Set the hearing schedule;

(j) Certify questions to the Commandant (CG–5P);

(k) Proceed with a scheduled session of the hearing in the absence of a party who failed to appear;

(l) Extend or shorten a non-statutorily imposed deadline under this subpart within the 240-day time limit for the completion of public hearings in 33 U.S.C. 1504(g);

(m) Set deadlines not specified in this subpart or the Deepwater Ports Act; and

(n) Take any other action authorized by or consistent with this subpart, the Deepwater Ports Act, or 5 U.S.C. 551–559.

[USCG–1998–3884, 71 FR 57651, Sept. 29, 2006, as amended by USCG–2013–0397, 78 FR 39177, July 1, 2013]

§ 148.238 Who are the parties to a formal hearing?

The parties to a formal hearing are:

(a) The applicant;

(b) The Commandant (CG–5P); and

(c) Any person intervening in the proceedings.

[USCG–1998–3884, 71 FR 57651, Sept. 29, 2006, as amended by USCG–2013–0397, 78 FR 39177, July 1, 2013]

§ 148.240 How does a State or a person intervene in a formal hearing?

(a) Any person or Adjacent Coastal State may intervene in a formal hearing.

(b) A person must file a petition of intervention within 10 days of notice that the formal hearing is issued. The petition must:

(1) Be addressed to the *Administrative Law Judge* (ALJ) Docketing Center;

(2) Identify the issues and the petitioner's interest in those issues; and

(3) Designate the name and address of a person who can be served if the petition is granted.

(c) An adjacent coastal State need only file a notice of intervention with the ALJ Docketing Center.

(d) The ALJ has the authority to limit the scope and period of intervention during the proceeding.

(e) If the ALJ denies a petition of intervention, the petitioner may file a notice of appeal with the ALJ Docketing Center within 7 days of the denial.

(1) A brief may be submitted with the notice of appeal.

(2) Parties who wish to file a brief in support of or against the notice of appeal may do so within 7 days of filing the notice.

(f) The Commandant (CG–5P) will rule on the appeal. The ALJ does not have to delay the proceedings for intervention appeals.

[USCG–1998–3884, 71 FR 57651, Sept. 29, 2006, as amended by USCG–2013–0397, 78 FR 39177, July 1, 2013]

§ 148.242 How does a person who is not a party to a formal hearing present evidence at the hearing?

(a) A person who is not a party to a formal hearing may present evidence at the hearing if he or she sends a petition to present evidence to the ALJ Docketing Center before the beginning of the formal hearing. The petition must describe the evidence that the person will present and show its relevance to the issues listed in the notice of formal hearing.

(b) If a petition is granted, the ruling will specify which evidence is approved to be presented at the hearing.

§ 148.244 Who must represent the parties at a formal hearing?

(a) All organizations that are parties to the proceeding must be represented by an attorney. Individuals may represent themselves.

(b) Any attorney representing a party to the proceeding must file a notice of appearance according to § 20.301(b) of this chapter.

(c) Each attorney must be in good standing and licensed to practice before a court of the United States or the highest court of any State, territory, or possession of the United States.

§ 148.246 When is a document considered filed and where should I file it?

(a) If a document to be filed is submitted by mail, it is considered filed on the date it is postmarked. If a document is submitted by hand delivery or electronically, it is considered filed on the date received by the clerk.

(b) File all documents and other materials related to an administrative proceeding at the U.S. Coast Guard Administrative Law Center, Attention: Hearing Docket Clerk, room 412, 40 South Gay Street, Baltimore, MD, 21201–4022.

§ 148.248 What happens when a document does not contain all necessary information?

Any document that does not satisfy the requirements in §§ 20.303 and 20.304 of this chapter will be returned to the person who submitted it with a statement of the reasons for denial.

§ 148.250 Who must be served before a document is filed?

Before a document may be filed by any party, it first must be served upon:

(a) All other parties; and

(b) The Commandant (CG–5P).

[USCG–1998–3884, 71 FR 57651, Sept. 29, 2006, as amended by USCG–2013–0397, 78 FR 39177, July 1, 2013]

§ 148.252 What is the procedure for serving a subpoena?

(a) A party may submit a request for a subpoena to the Administrative Law Judge (ALJ). The request must show the relevance and scope of the evidence sought.

(b) Requests should be submitted sufficiently in advance of the hearing so that exhibits and witnesses can be included in the lists required by § 20.601 of this chapter, but may be submitted later and before the end of the hearing, if good cause is shown for the late submission.

(c) A request for a subpoena must be submitted to the ALJ.

(d) A proposed subpoena, such as the form in *http://cgweb.comdt.uscg.mil/g-cj/subpoena.doc*, must be submitted with the request. If you do not use this form, the proposed subpoena must contain:

(1) The docket number of the proceedings;

(2) The captions ''Department of Homeland Security,'' ''Coast Guard,'' and ''Licensing of deepwater port for coastal waters off (insert name of the coastal State closest to the proposed deepwater port and the docket number of the proceeding)'';

(3) The name and the address of the office of the ALJ;

(4) For a subpoena giving testimony, a statement commanding the person to whom the subpoena is directed to attend the formal hearing and give testimony;

(5) For a subpoena producing documentary evidence, a statement commanding the person to produce designated documents, books, papers, or other tangible things at a designated time or place; and

(6) An explanation of the procedure in § 20.309(d) of this chapter and paragraph (h) of this section for quashing a subpoena.

(e) The procedure for serving a subpoena must follow Rule 45 of the Federal Rules of Civil Procedure, unless the ALJ authorizes another procedure.

(f) The witness fees for a subpoenaed witness are the same as the fees for witnesses subpoenaed in U.S. District Courts. The person requesting the subpoena must pay these fees.

(g) When serving a subpoena, a party must include witness fees in the form of a check to the individual or organization for one day plus mileage, or, in the case of a government-issued subpoena, a form SF–1157 so a witness may receive fees and mileage reimbursement.

(h) Any person served with a subpoena has 10 days from the time of service to move to quash the subpoena.

(i) If a person does not comply with a subpoena, the ALJ decides whether judicial enforcement of the subpoena is necessary. If the ALJ decides it is, the Commandant (CG–5P) reviews this decision.

[USCG–1998–3884, 71 FR 57651, Sept. 29, 2006, as amended by USCG–2013–0397, 78 FR 39177, July 1, 2013]

§ 148.254 How is a hearing transcript prepared?

(a) Under the supervision of the Administrative Law Judge (ALJ), the reporter prepares a verbatim transcript of the hearing. Nothing may be deleted from the transcript, unless ordered by the ALJ and noted in the transcript.

(b) After a formal hearing is completed, the ALJ certifies and forwards the record, including the transcript, to the clerk to be placed into the docket.

(c) At any time within the 20 days after the record is docketed, the ALJ may make corrections to the certified transcript. When corrections are filed, they are attached as appendices.

(d) Any motion to correct the record must be submitted within 10 days after the record is docketed.

§ 148.256 What happens at the conclusion of a formal hearing?

After closing the record of a formal hearing, the Administrative Law Judge (ALJ) prepares a recommended finding on the issues that were the subject of the hearing. The ALJ submits that finding to the Commandant (CG–5P).

[USCG–1998–3884, 71 FR 57651, Sept. 29, 2006, as amended by USCG–2013–0397, 78 FR 39177, July 1, 2013]

APPROVAL OR DENIAL OF THE APPLICATION

§ 148.276 When must the application be approved or denied?

(a) In 33 U.S.C. 1504, the Act provides strict timelines for action on a license application, which, if closely observed, can lead to action in just under 1 year. The Coast Guard, in concurrence with MARAD, can suspend the process if an applicant fails to provide timely information or requests additional time to comply with a request.

(b) The Coast Guard must conduct public hearings in each Adjacent Coastal State within 240 days of publishing the notice of receipt of a deepwater port license application.

(c) MARAD issues a Record of Decision (ROD) approving or denying a license application within 90 days after the final public hearing. Actual issuance of a license may not take place until certain conditions imposed by the ROD have been met. Those conditions may include how the applicant must address design, construction, installation, testing, operations, and decommissioning of the deepwater port, or meet the requirements of other agencies.

[USCG–1998–3884, 71 FR 57651, Sept. 29, 2006, as amended by USCG–2013–0397, 78 FR 39177, July 1, 2013]

§ 148.277 How may Federal agencies and States participate in the application process?

(a) Under § 148.209 of this part, Federal agencies and Adjacent Coastal States are sent copies of the application. The agencies and States are encouraged to begin submitting their comments at that time.

(b) To be considered, comments from Federal agencies and Adjacent Coastal States must be received by the Commandant (CG–5P) within 45 days after the close of the public hearing period specified in § 148.276(b) of this part. Separate comment periods will apply to the review of documents created during the National Environmental Policy Act process. Both the Commandant (CG–5P) and MARAD review the comments received.

(c) Comments should identify problems, if any, and suggest possible solutions.

[USCG–1998–3884, 71 FR 57651, Sept. 29, 2006, as amended by USCG–2013–0397, 78 FR 39177, July 1, 2013]

§ 148.279 What are the criteria for approval or denial of an application?

The criteria for approving or denying a license application appear in 33 U.S.C. 1503.

§ 148.281 What happens when more than one application is submitted for a deepwater port in the same application area?

(a) When more than one application is submitted for a deepwater port in the same application area under 33 U.S.C. 1504(d), only one application is approved. Except as provided in paragraph (b) of this section, applicants receive priority in the following order:

(1) An Adjacent Coastal State or combination of States, political subdivision of the State, or an agency or instrumentality, including a wholly owned corporation of the State;

(2) A person that is:

(i) Not engaged in producing, refining, or marketing oil;

(ii) Not an affiliate of a person engaged in producing, refining, or marketing oil; or

(iii) Not an affiliate of a person engaged in producing, refining, or marketing oil; and then

(3) Any other applicant.

(b) MARAD may also approve one of the proposed deepwater ports if it determines that that deepwater port will best serve the national interest. In making this determination, MARAD considers:

(1) The degree to which each deepwater port will affect the environment, as determined under the review criteria in subpart G to this part;

(2) The differences between the anticipated completion dates of the deepwater ports; and

(3) The differences in costs for construction and operation of the deepwater ports that would be passed on to consumers of oil.

(c) This section does not apply to applications for natural gas deepwater ports.

[USCG–1998–3884, 71 FR 57651, Sept. 29, 2006, as amended by USCG–2013–0397, 78 FR 39177, July 1, 2013]

§ 148.283 When is the application process stopped before the application is approved or denied?

The Commandant (CG–5P) recommends to MARAD that the application process be suspended before the application is approved or denied if:

(a) All applications are withdrawn before MARAD approves one of them; or

(b) There is only one application; it is incomplete, and the applicant does not respond to a request by the Commandant (CG–5P) for further information, as per § 148.107 of this part.

[USCG–1998–3884, 71 FR 57651, Sept. 29, 2006, as amended by USCG–2013–0397, 78 FR 39177, July 1, 2013]

Subpart D—Licenses

§ 148.300 What does this subpart concern?

This subpart concerns the license for a deepwater port and the procedures for transferring, amending, suspending, reinstating, revoking, and enforcing a license.

§ 148.305 What is included in a deepwater port license?

A deepwater port license contains information about the licensee and the deepwater port, and any conditions of its own or of another agency's that may be described by MARAD in the license. Licenses are issued in conformance with the Act, and with rules and policies of MARAD that implement the Act.

[USCG–1998–3884, 71 FR 57651, Sept. 29, 2006, as amended by USCG–2013–0397, 78 FR 39177, July 1, 2013]

§ 148.307 Who may consult with the Commandant (CG–5P) and MARAD on developing the proposed conditions of a license?

Federal agencies, the Adjacent Coastal States, and the owner of the deepwater port may consult with the Commandant (CG–5P) and MARAD on the conditions of the license being developed under 33 U.S.C. 1503(e).

[USCG–2013–0397, 78 FR 39177, July 1, 2013]

§ 148.310 How long does a license last?

Each license remains in effect indefinitely subject to the following:

(a) If it is suspended or revoked by MARAD;

(b) If it is surrendered by the owner; or

(c) As otherwise provided by condition of the license.

§ 148.315 How is a license amended, transferred, or reinstated?

(a) MARAD may amend, transfer, or reinstate a license if it finds that the amendment, transfer, or reinstatement is consistent with the requirements of the Act and this subchapter.

(b) The owner must submit a request for an amendment, transfer, or reinstatement to the Commandant (CG–5P) or the MARAD Administrator.

[USCG–1998–3884, 71 FR 57651, Sept. 29, 2006, as amended by USCG–2013–0397, 78 FR 39177, July 1, 2013]

§ 148.320 How is a license enforced, suspended, or revoked?

MARAD may enforce, suspend, or revoke a license under 33 U.S.C. 1507(c).

§ 148.325 How soon after deepwater port decommissioning must the licensee initiate removal?

Within 2 years of deepwater port decommissioning, the licensee must initiate removal procedures. The Commandant (CG–5P) will advise and coordinate with appropriate Federal agencies and the States concerning activities covered by this section.

[USCG–2013–0397, 78 FR 39177, July 1, 2013]

Subpart E—Site Evaluation and Pre-Construction Testing

§ 148.400 What does this subpart do?

(a) This subpart prescribes requirements under 33 U.S.C. 1504(b) for the activities that are involved in site evaluation and pre-construction testing at potential locations for deepwater ports and that may:

(1) Adversely affect the environment;

(2) Interfere with authorized uses of the Outer Continental Shelf; or

(3) Pose a threat to human health and welfare.

(b) For the purpose of this subpart, ''site evaluation and pre-construction testing'' means studies performed at potential deepwater port locations, including:

(1) Preliminary studies to determine the feasibility of a site;

(2) Detailed studies of the topographic and geologic structure of the ocean bottom to determine its ability to support offshore structures and other equipment; and

(3) Studies done for the preparation of the environmental analysis required under § 148.105 of this part.

[USCG–1998–3884, 71 FR 57651, Sept. 29, 2006, as amended by USCG–2013–0397, 78 FR 39177, July 1, 2013]

§ 148.405 What are the procedures for notifying the Commandant (CG–5P) of proposed site evaluation and pre-construction testing?

(a) Any person who wants to conduct site evaluation and pre-construction testing at a potential site for a deepwater port must submit a written notice to the Commandant (CG–5P) at least 30 days before the beginning of the evaluation or testing. The Commandant (CG–5P) advises and coordinates with appropriate Federal agencies and the States concerning activities covered by this subpart.

(b) The written notice must include the following:

(1) The names of all parties participating in the site evaluation and pre-construction testing;

(2) The type of activities and the way they will be conducted;

(3) Charts showing where the activities will be conducted and the locations of all offshore structures, including pipelines and cables, in or near the proposed area;

(4) The specific purpose for the activities;

(5) The dates when the activities will begin and end;

(6) The available data on the environmental consequences of the activities;

(7) A preliminary report, based on existing data, of the historical and archeological significance of the area where the proposed activities are to take place. The report must include contacts made with any appropriate State liaison officers for historic preservation; and

(8) Additional information, if necessary, in individual cases.

(c) For the following activities, the notice only needs the information required in paragraphs (b)(1), (b)(2), and (b)(5) of this section, as well as a general indication of the proposed location and purpose of the activities, including:

(1) Gravity and magneto-metric measurements;

(2) Bottom and sub-bottom acoustic profiling, within specified limits, without the use of explosives;

(3) Sediment sampling of a limited nature using either core or grab samplers, and the specified diameter and depth to which the sampling would penetrate if geological profiles indicate no discontinuities that may have archeological significance;

(4) Water and biotic sampling if the sampling does not adversely affect shellfish beds, marine mammals, or an endangered species, or if the sampling is permitted by another Federal agency;

(5) Meteorological measurements, including the setting of instruments;

(6) Hydrographic and oceanographic measurements, including the setting of instruments; and

(7) Small diameter core sampling to determine foundation conditions.

(d) A separate written notice is required for each site.

[USCG–1998–3884, 71 FR 57651, Sept. 29, 2006, as amended by USCG–2013–0397, 78 FR 39177, July 1, 2013]

§ 148.410 What are the conditions for conducting site evaluation and pre-construction testing?

(a) No person may conduct site evaluation and pre-construction testing unless it complies with this subpart and other applicable laws.

(b) Measures must be taken to prevent or minimize the effect of activities under § 148.400(a) of this part.

[USCG–1998–3884, 71 FR 57651, Sept. 29, 2006, as amended by USCG–2013–0397, 78 FR 39177, July 1, 2013]

§ 148.415 When conducting site evaluation and pre-construction testing, what must be reported?

(a) When conducting site evaluation or pre-construction testing, the following must be immediately reported by any means to the Commandant (CG–5P):

(1) Any evidence of objects of cultural, historical, or archeological significance;

(2) Any adverse effect on the environment;

(3) Any interference with authorized uses of the Outer Continental Shelf;

(4) Any threat to human health and welfare; and

(5) Any adverse effect on an object of cultural, historical, or archeological significance.

(b) Within 120 days after the site evaluation or pre-construction testing, a final written report must be submitted to the Commandant (CG–5P) that contains:

(1) A narrative description of the activities performed;

(2) A chart, map, or plat of the area where the activities occurred;

(3) The dates when the activities were performed;

(4) Information on the adverse effects of items reported under paragraph (a) of this section;

(5) Data on the historical or archeological significance of the area where the activities were conducted, including a report by an underwater archeologist; and

(6) Any additional information required by the Commandant (CG–5P) on a case-by-case basis.

[USCG–1998–3884, 71 FR 57651, Sept. 29, 2006, as amended by USCG–2013–0397, 78 FR 39177, July 1, 2013]

§ 148.420 When may the Commandant (CG–5P) suspend or prohibit site evaluation or pre-construction testing?

(a) The Commandant (CG–5P) may order, either in writing or orally, with written confirmation, the prohibition or immediate suspension of any activity related to site evaluation or pre-construction testing when the activity threatens to harm:

(1) Human life;

(2) Biota;

(3) Property;

(4) Cultural resources;

(5) Any valuable mineral deposits; or

(6) The environment.

(b) The Commandant (CG–5P) will consult with the applicant on measures to remove the cause for suspension.

(c) The Commandant (CG–5P) may lift a suspension after the applicant assures the Commandant (CG–5P) that the activity will no longer cause the threat on which the suspension was based.

[USCG–1998–3884, 71 FR 57651, Sept. 29, 2006, as amended by USCG–2013–0397, 78 FR 39177, July 1, 2013]

Subpart F—Exemption From or Adjustments to Requirements in This Subchapter

§ 148.500 What does this subpart do?

This subpart provides procedures for requesting an exemption from a requirement in this subchapter. The Commandant (CG–5) and MARAD coordinate in evaluating requests for exemption from the requirements in this subchapter.

§ 148.505 How do I apply for an exemption?

(a) Any person required to comply with a requirement in this subchapter may submit a petition for exemption from that requirement.

(b) The petition must be submitted in writing to the Commandant (CG–5P) and the MARAD Administrator.

(c) The Commandant (CG–5P) may require the petition to provide an alternative to the requirement.

[USCG–1998–3884, 71 FR 57651, Sept. 29, 2006, as amended by USCG–2013–0397, 78 FR 39177, July 1, 2013]

§ 148.510 What happens when a petition for exemption involves the interests of an Adjacent Coastal State?

If the petition for exemption concerns an Adjacent Coastal State, the Commandant (CG–5P) forwards the petition to the Governor of the State for the Governor's recommendation.

[USCG–1998–3884, 71 FR 57651, Sept. 29, 2006, as amended by USCG–2013–0397, 78 FR 39178, July 1, 2013]

§ 148.515 When is an exemption allowed?

The Commandant (CG–5P) may recommend that MARAD allow an exemption if he or she determines that:

(a) Compliance with the requirement would be contrary to public interest;

(b) Compliance with the requirement would not enhance safety or the health of the environment;

(c) Compliance with the requirement is not practical because of local conditions or because the materials or personnel needed for compliance are unavailable;

(d) National security or national economy justifies a departure from the rules; or

(e) The alternative, if any, proposed in the petition would:

(1) Ensure comparable or greater safety, protection of the environment, and quality of deepwater port construction, maintenance, and operation; and

(2) Be consistent with recognized principles of international law.

[USCG–1998–3884, 71 FR 57651, Sept. 29, 2006, as amended by USCG–2013–0397, 78 FR 39178, July 1, 2013]

§ 148.600 What is the limit of financial liability?

The financial limit for liability for deepwater ports is set in accordance with 33 U.S.C. 2704.

§ 148.605 How is the limit of liability determined?

(a) The Coast Guard may lower the $350,000,000 limit of liability for deepwater ports set by 33 U.S.C. 2704(a)(4), pursuant to paragraph (d) of that section, particularly for natural gas deepwater ports that will store or use oil in much smaller amounts than an oil deepwater port.

(b) Requests to adjust the limit of liability for a deepwater port must be submitted to the Commandant (CG–5P). Adjustments are established by a rulemaking with public notice and comment that may take place concurrently with the processing of the deepwater port license application.

[USCG–1998–3884, 71 FR 57651, Sept. 29, 2006, as amended by USCG–2013–0397, 78 FR 39178, July 1, 2013]

Subpart G—Environmental Review Criteria for Deepwater Ports

§ 148.700 How does the Deepwater Port Act interact with other Federal and State laws?

(a) Nothing in this subpart supersedes any Federal, tribal, or State requirements for the protection of the environment.

(b) The applicant must prepare and submit applications to each respective agency that requires a permit or license to operate the deepwater port.

(c) A list of Federal and State agencies that require certification includes, but is not limited to:

(1) The Environmental Protection Agency, for Clean Air Act and Clean Water Act permits;

(2) The Pipeline and Hazardous Materials Safety Administration, Office of Pipeline Safety; and

(3) The Bureau of Ocean Energy Management (BOEM); or

(4) Both the Office of Pipeline Safety and BOEM for pipeline approvals, and the appropriate State environmental agency or permitting agency.

[USCG–1998–3884, 71 FR 57651, Sept. 29, 2006, as amended by USCG–2013–0397, 78 FR 39178, July 1, 2013]

§ 148.702 How were the environmental review criteria developed?

Under 33 U.S.C. 1505, the Commandant (CG–5P) must establish environmental review criteria for use in evaluating a proposed deepwater port. In developing these criteria, the Coast Guard considers the requirements for compliance with Federal and State mandates for the protection of the environment contained in, but not limited to, such guidance as published by:

(a) The Council on Environmental Quality in 40 CFR parts 1500–1508;

(b) Department of Homeland Security Directive 023–01, Environmental Planning Program; and

(c) The Coast Guard in Commandant Instruction M16475.1 (series), National Environmental Policy Act Implementing Procedures and Policy for Considering Environmental Impacts.

[USCG–1998–3884, 71 FR 57651, Sept. 29, 2006, as amended by USCG–2013–0397, 78 FR 39178, July 1, 2013]

§ 148.705 What is determined by the environmental evaluation?

(a) The environmental criteria to be used in evaluating a license application are established by general consensus of expertise, scientific opinion, public interest, and institutional requirements, such as laws and regulations established for the protection of the environment. Criteria that may be established in future environmental regulations or other requirements to protect the environment will also be used.

(b) The environmental criteria to be used in evaluating a license application are applied to all relevant aspects of:

(1) The construction, operation, and decommissioning phases of a deepwater port;

(2) The operations of the vessels that serve the deepwater port;

(3) The deepwater port's servicing and support activities;

(4) Shore-based construction and fabrication sites;

(5) Shoreside supporting facilities, if appropriate, for the proposed location; and

(6) The No Action alternative and other reasonable alternatives.

(c) The criteria are also applied in a manner that takes into account the cumulative effects of other reasonably foreseeable actions as outlined in § 148.705.

[USCG–1998–3884, 71 FR 57651, Sept. 29, 2006, as amended by USCG–2013–0397, 78 FR 39178, July 1, 2013]

§ 148.707 What type of criteria will be used in an environmental review and how will they be applied?

(a) The license application will be reviewed for the deepwater port's effects on the environment and for the environment's effects on the deepwater port and any of its shoreside support facilities.

(b) The environmental evaluation will be applied to the phases of construction, operation, and decommissioning of the proposed location, and at least one alternative site. The evaluation will determine:

(1) The effect on the environment, including but not limited to:

(i) Impacts on endangered species;

(ii) Essential fish habitat;

(iii) Marine sanctuaries;

(iv) Archaeological, cultural and historic sites;

(v) Water and air;

(vi) Coastal zone management;

(vii) Coastal barrier resources; and

(viii) Wetlands and flood plains.

(2) The effect on oceanographic currents and wave patterns;

(3) The potential risks to a deepwater port from waves, winds, weather, and geological conditions, and the steps that can be taken to protect against or minimize these dangers; and

(4) The effect on human health and welfare, including socioeconomic impacts, environmental justice and protection of children from environmental health and safety risks.

[USCG–1998–3884, 71 FR 57651, Sept. 29, 2006, as amended by USCG–2013–0397, 78 FR 39178, July 1, 2013]

§ 148.708 Must the applicant's proposal reflect potential regulations?

Although a regulation is of no effect until it has been officially promulgated, to minimize the subsequent impact that potential regulations may have on a licensee, an applicant can and should reflect reasonably foreseeable environmental regulations in planning, operating, and decommissioning a deepwater port.

§ 148.709 How are these criteria reviewed and revised?

The Commandant (CG–5P) periodically reviews and may revise these criteria. Reviews and revisions are conducted in accordance with § 148.705 of this subpart. The criteria established are consistent with the National Environmental Policy Act.

[USCG–1998–3884, 71 FR 57651, Sept. 29, 2006, as amended by USCG–2013–0397, 78 FR 39178, July 1, 2013]

§ 148.710 What environmental conditions must be satisfied?

(a) MARAD may issue a license to construct a deepwater port under the Act, with or without conditions, if certain specified conditions are met. The relevant environmental considerations include, but are not limited to, the following:

(1) Construction and operation of the deepwater port that will be in the national interest and consistent with national security and other national policy goals and objectives, including energy sufficiency, environmental quality, protection from the threat of terrorist attack and other subversive activity against persons and property on the deepwater port and the vessels and crews calling at the deepwater port; and

(2) Under the environmental review criteria in § 148.707 of this subpart, the applicant has demonstrated that the deepwater port will be constructed, operated, and decommissioned using the best available technology to prevent or minimize adverse impacts on the marine environment (33 U.S.C. 1503(c)(3), 1504(f) and 1505(a)(1)).

(b) Under 33 U.S.C. 1504(f), these criteria in § 148.707 of this part must be considered in the preparation of a single detailed environmental impact statement or environmental assessment for all timely applications covering a single application area. Additionally, 33 U.S.C. 1504(i)(3) specifies that if more than one application is submitted for an ''application area,'' as defined in 33 U.S.C. 1504(d)(2), the criteria must be used, among other factors, in determining whether any one proposed deepwater port for oil clearly best serves the national interest.

(c) In accordance with 40 CFR 1502.9, the Commandant (CG–5P) will prepare a supplement to a final environmental impact statement if there is significant new information or circumstances relevant to environmental concerns and bearing on the deepwater port and related activities affecting its location site, construction, operation or decommissioning.

[USCG–1998–3884, 71 FR 57651, Sept. 29, 2006, as amended by USCG–2013–0397, 78 FR 39178, July 1, 2013]

§ 148.715 How is an environmental review conducted?

The environmental review of a proposed deepwater port and reasonable alternatives consists of Federal, tribal, State, and public review of the following two parts:

(a) An evaluation of the proposal's completeness of environmental information and quality of assessment, probable environmental impacts, and identification of procedures or technology that might mitigate probable adverse environmental impacts through avoiding, minimizing, rectifying, reducing, eliminating, or compensating for those impacts; and

(b) An evaluation of the effort made under the proposal to mitigate its probable environmental impacts. This evaluation will assess the applicant's consideration of the criteria in §§ 148.720 through 148.740 of this subpart.

§ 148.720 What are the siting criteria?

In accordance with § 148.715(b), the proposed and alternative sites for the deepwater port will be evaluated on the basis of how well each:

(a) Optimizes location to prevent or minimize detrimental environmental effects;

(b) Minimizes the space needed for safe and efficient operation;

(c) Locates offshore components in areas with stable sea bottom characteristics;

(d) Locates onshore components where stable foundations can be developed;

(e) Minimizes the potential for interference with its safe operation from existing offshore structures and activities;

(f) Minimizes the danger posed to safe navigation by surrounding water depths and currents;

(g) Avoids extensive dredging or removal of natural obstacles such as reefs;

(h) Minimizes the danger to the deepwater port, its components, and tankers calling at the deepwater port from storms, earthquakes, or other natural hazards;

(i) Maximizes the permitted use of existing work areas, facilities, and access routes;

(j) Minimizes the environmental impact of temporary work areas, facilities, and access routes;

(k) Maximizes the distance between the deepwater port, its components, and critical habitats including commercial and sport fisheries, threatened or endangered species habitats, wetlands, flood plains, coastal resources,

marine management areas, and essential fish habitats;

(l) Minimizes the displacement of existing or potential mining, oil, or gas exploration and production or transportation uses;

(m) Takes advantage of areas already allocated for similar use, without overusing such areas;

(n) Avoids permanent interference with natural processes or features that are important to natural currents and wave patterns; and

(o) Avoids dredging in areas where sediments contain high levels of heavy metals, biocides, oil or other pollutants or hazardous materials, and in areas designated wetlands or other protected coastal resources.

[USCG–1998–3884, 71 FR 57651, Sept. 29, 2006, as amended by USCG–2013–0397, 78 FR 39178, July 1, 2013]

§ 148.722 Should the construction plan incorporate best available technology and recommended industry practices?

Each applicant must submit a proposed construction plan. It must incorporate best available technology and recommended industry practices as directed in § 148.730 of this part.

[USCG–1998–3884, 71 FR 57651, Sept. 29, 2006, as amended by USCG–2013–0397, 78 FR 39178, July 1, 2013]

§ 148.725 What are the design, construction and operational criteria?

In accordance with § 148.715(b) of this part, the deepwater port proposal and reasonable alternatives will be evaluated on the basis of how well they:

(a) Reflect the use of best available technology in design, construction procedures, operations, and decommissioning;

(b) Include safeguards, backup systems, procedures, and response plans to minimize the possibility and consequences of pollution incidents such as spills and discharges, while permitting safe operation with appropriate safety margins under maximum operating loads and the most adverse operating conditions;

(c) Provide for safe, legal, and environmentally sound waste disposal, resource recovery, affected area reclamation, and enhanced use of spoil and waste;

(d) Avoid permanent interference with natural processes or features that are important to natural currents and wave patterns;

(e) Avoid groundwater drawdown or saltwater intrusion, and minimizes mixing salt, fresh, and brackish waters;

(f) Avoid disrupting natural sheet flow, water flow, and drainage patterns or systems;

(g) Avoid interference with biotic populations, especially breeding habitats or migration routes;

(h) Maximize use of existing facilities;

(i) Provide personnel trained in oil spill prevention at critical locations identified in the accident analysis;

(j) Provide personnel trained in oil spill mitigation; and

(k) Plan for safe and effective removal of the deepwater port in the event of its decommissioning.

[USCG–1998–3884, 71 FR 57651, Sept. 29, 2006, as amended by USCG–2013–0397, 78 FR 39178, July 1, 2013]

§ 148.730 What are the land use and coastal zone management criteria?

In accordance with § 148.715(b) of this part, the deepwater port proposal and reasonable alternatives will be evaluated on the basis of how well they:

(a) Accord with existing and planned land use, including management of the coastal region, for which purpose the proposal must be accompanied by a consistency determination from appropriate State agencies for any designated Adjacent Coastal State;

(b) Adhere to proposed local and State master plans;

(c) Minimize the need for special exceptions, zoning variances, or non-conforming uses;

(d) Plan flood plain uses in ways that will minimize wetlands loss, flood damage, the need for federally-funded flood protection or flood relief, or any decrease in the public value of the flood plain as an environmental resource; and

(e) Avoid permanent alteration or harm to wetlands, and take positive

steps to minimize adverse effects on wetlands.

[USCG–1998–3884, 71 FR 57651, Sept. 29, 2006, as amended by USCG–2013–0397, 78 FR 39178, July 1, 2013]

§ 148.735 What are other critical criteria that must be evaluated?

In accordance with § 148.715(b) of this part, the deepwater port proposal and reasonable alternatives will be evaluated on the basis of how well they:

(a) Avoid detrimental effects on human health and safety;

(b) Pose no compromise to national security;

(c) Account for the historic, archeological, and cultural significance of the area, including any potential requirements for historical preservation;

(d) Minimize harmful impacts to minorities and children; and

(e) Plan for serious consideration of the proposal that offers the least potential for environmental harm to the region, or potential mitigation actions, when conflict exists between two or more proposed uses for a site.

[USCG–1998–3884, 71 FR 57651, Sept. 29, 2006, as amended by USCG–2013–0397, 78 FR 39178, July 1, 2013]

§ 148.737 What environmental statutes must an applicant follow?

In constructing and operating a deepwater port, the deepwater port must comply with all applicable Federal, State, and tribal environmental statutes. For the purposes of information, a list of Federal environmental statutes and Executive Orders (E.O.s) that may apply includes but is not limited to: Abandoned Shipwreck Act (ASA), 43 U.S.C. 2102, *et. seq.;* American Indian Religious Freedom Act (AIRFA), 42 U.S.C. 1996, *et. seq.;* Antiquities Act, 16 U.S.C. 433, *et. seq.;* Archeological and Historic Preservation Act (AHPA), 16 U.S.C. 469; Archeological Resources Protection Act (AHPA), 16 U.S.C. 470 aa-ll, *et. seq.;* Architectural Barriers Act, 42 U.S.C. 4151, *et. seq.;* Clean Air Act (CAA), Pub. L. 95–95, 42 U.S.C. 7401, *et. seq.;* Clean Water Act of 1977 (CWA), Pub. L. 95–217, 33 U.S.C. 1251, *et. seq.;* Coastal Barrier Resources Act (CBRA), Pub. L. 97–348, 16 U.S.C. 3510, *et. seq.;* Coastal Zone Management Act (CZMA), Pub. L. 92–583, 16 U.S.C. 1451, *et. seq.;* Community Environmental Response Facilitation Act (CERFA), 42 U.S.C. 9620, *et. seq.;* Comprehensive Environmental Response, Compensation, and Liability Act of 1980 (CERCLA), also commonly referred to as Superfund, Pub. L. 96–510, 26 U.S.C. 4611, *et. seq.;* Consultation and Coordination With Indian Tribal Governments, E.O. 13175, 65 FR 67249; Coral Reef Protection, E.O. 13089, 63 FR 32701; Department of Transportation Act, Section 4(f), Pub. L. 89–670, 49 U.S.C. 303, Section 4(f), *et. seq.;* Emergency Planning and Community Right-to-Know Act, 42 U.S.C. 11001–11050, *et. seq.;* Endangered Species Act of 1973 (ESA), Pub. L. 93–205, 16 U.S.C. 1531, *et. seq.;* Energy Efficiency and Water Conservation at Federal Facilities, E.O. 12902, 59 FR 11463; Environmental Effects Abroad of Major Federal Agencies, E.O. 12114, 44 FR 1957; Environmental Quality Improvement Act, Pub. L. 98–581, 42 U.S.C. 4371, *et. seq.;* Farmlands Protection Policy Act, Pub. L. 97–98, 7 U.S.C. 4201, *et. seq.;* Federal Actions to Address Environmental Justice in Minority Populations and Low-Income Populations, E.O. 12898, 59 FR 7629; Federal Compliance with Pollution Control Standards, E.O. 12088, 43 FR 47707; Federal Insecticide, Fungicide, and Rodenticide Act, Pub. L. 86–139, 7 U.S.C. 135, *et. seq.;* Federal Records Act (FRA), 44 U.S.C. 2101–3324, *et. seq.;* Federalism, E.O. 13083, Fish and Wildlife Act of 1956, Pub. L. 85–888, 16 U.S.C. 742, *et. seq.;* Fish and Wildlife Coordination Act, (Pub. L. 85–624, 16 U.S.C. 661, *et. seq.;* Fisheries Conservation and Recovery Act of 1976, Pub. L. 94–265, 16 U.S.C. 1801, *et. seq.;* Flood Disaster Protection Act, 42 U.S.C. 4001, *et. seq.;* Flood Plain Management and Protection, E.O. 11988, 42 FR 26951; Greening the Government Through Leadership in Environmental Management, E.O. 13148, 65 FR 24595; 63 FR 49643; Historic Sites Act, 16 U.S.C. 46, *et. seq.;* Indian Sacred Sites, E.O. 13007, 61 FR 26771; Intergovernmental Review of Federal Programs E.O. 12372, 47 FR 30959; Invasive Species, E.O. 13112, 64 FR 6183; Locating Federal Facilities on Historic Properties in our Nation's Central Cities, E.O. 13006, 61 FR 26071; Magnuson-Stevens Fishery Conservation and Management Act as amended through October 11, 1996, 16

U.S.C. 1801, *et. seq.;* Marine Mammal Protection Act of 1972 (MMPA), Pub. L. 92–522, 16 U.S.C. 1361; Marine Protected Areas, E.O. 13158, 65 FR 24909; Marine Protection, Research, and Sanctuaries Act of 1972, Pub. L. 92–532, 16 U.S.C. 1431, *et. seq.* and 33 U.S.C. U.S.C. 1401, *et. seq.;* Migratory Bird Treaty Act, 16 U.S.C. 703–712, *et. seq.;* National Environmental Policy Act of 1969 (NEPA), Pub. L. 91–190, 42 U.S.C. 4321, *et. seq.;* National Historic Preservation Act of 1996 (NHPA), Pub. L. 89–665, 16 U.S.C. 470, *et. seq.;* Native American Graves Protection and Repatriation Act (NAGPRA), 25 U.S.C. 3001, *et. seq.;* Noise Control Act of 1972, Pub. L. 92–574, 42 U.S.C. 4901, *et. seq.;* Pollution Prevention Act of 1990 (PPA), 42 U.S.C. 13101–13109, *et. seq.;* Protection and Enhancement of Cultural Environmental Quality, E.O. 11593, 36 FR 8921; Protection and Enhancement of Environmental Quality, E.O. 11514, 35 FR 4247; Protection of Children from Environmental Health and Safety Risks, E.O. 13045, 62 FR 19885; Protection of Wetlands, E.O. 11990, 42 FR 26961; Recreational Fisheries, E.O. 12962, 60 FR 307695; Resource Conservation and Recovery Act of 1976 (RCRA), Pub. L. 94–580, 42 U.S.C. 6901, *et. seq.;* Responsibilities of Federal Agencies to Protect Migratory Birds, E.O. 13186, 66 FR 3853; Safe Drinking Water Act (SDWA), Pub. L. 93–523, 42, U.S.C. 201, *et. seq.;* Toxic Substances Control Act (TSCA), 7 U.S.C. 136, *et. seq.;* and Wild and Scenic Rivers Act, Pub. L. 90–542, 16 U.S.C. 1271, *et. seq.*

[USCG–1998–3884, 71 FR 57651, Sept. 29, 2006, as amended by USCG–2013–0397, 78 FR 39178, July 1, 2013]

PART 149—DEEPWATER PORTS: DESIGN, CONSTRUCTION, AND EQUIPMENT

Subpart A—General

Sec.

149.1 What does this part do?
149.5 What definitions apply to this part?
149.10 Where can the operator obtain a list of Coast Guard-approved equipment?
149.15 What is the process for submitting alterations and modifications affecting the design and construction of a deepwater port?

Subpart B—Pollution Prevention Equipment

149.100 What does this subpart do?
149.103 What are the requirements for discharge containment and removal material and equipment?
149.105 What are the requirements for the overflow and relief valves?
149.110 What are the requirements for pipeline end manifold shutoff valves?
149.115 What are the requirements for blank flange and shutoff valves?
149.120 What are the requirements for manually operated shutoff valves?
149.125 What are the requirements for the malfunction detection system?
149.130 What are the requirements for the cargo transfer system alarm?
149.135 What should be marked on the cargo transfer system alarm switch?
149.140 What communications equipment must be on a deepwater port?
149.145 What are the requirements for curbs, gutters, drains, and reservoirs?

Subpart C—Lifesaving Equipment

149.300 What does this subpart do?

MANNED DEEPWATER PORT REQUIREMENTS

149.301 What are the requirements for lifesaving equipment?
149.302 What are the requirements when lifesaving equipment is repaired or replaced?
149.303 What survival craft and rescue boats may be used on a manned deepwater port?
149.304 What type and how many survival craft and rescue boats must a manned deepwater port have?
149.305 What are the survival craft requirements for temporary personnel?
149.306 What are the requirements for lifeboats?
149.307 What are the requirements for freefall lifeboats?
149.308 What are the requirements for liferafts?
149.309 What are the requirements for marine evacuation systems?
149.310 What are the muster and embarkation requirements for survival crafts?
149.311 What are the launching and recovery requirements for lifeboats?
149.312 What are the launching equipment requirements for inflatable liferafts?
149.313 How must survival craft be arranged?
149.314 What are the approval and stowage requirements for rescue boats?
149.315 What embarkation, launching, and recovery arrangements must rescue boats meet?
149.316 What are the requirements for lifejackets?

149.317 How and where must lifejackets be stowed?
149.318 Must every person on the deepwater port have a lifejacket?
149.319 What additional lifejackets must the deepwater port have?
149.320 What are the requirements for ring life buoys?
149.321 How many ring life buoys must be on each deepwater port?
149.322 Where must ring life buoys be located and how must they be stowed?
149.323 What are the requirements for first aid kits?
149.324 What are the requirements for litters?
149.325 What emergency communications equipment must be on a manned deepwater port?
149.326 What are the immersion suit requirements?
149.327 What are the approval requirements for work vests and anti-exposure (deck) suits?
149.328 How must work vests and anti-exposure (deck) suits be stowed?
149.329 How must work vests and deck suits be marked?
149.330 When may a work vest or deck suit be substituted for a lifejacket?
149.331 What are the requirements for hybrid personal flotation devices?
149.332 What are the requirements for inflatable lifejackets?
149.333 What are the marking requirements for lifesaving equipment?

UNMANNED DEEPWATER PORT REQUIREMENTS

149.334 Who must ensure compliance with the requirements for unmanned deepwater ports?
149.335 When are people prohibited from being on an unmanned deepwater port?
149.336 What are the requirements for lifejackets?
149.337 What are the requirements for ring life buoys?
149.338 What are the requirements for immersion suits?
149.339 What is the requirement for previously approved lifesaving equipment on a deepwater port?
149.340 What are the requirements for lifesaving equipment that is not required by this subchapter?

Subpart D—Firefighting and Fire-Protection Equipment

149.400 What does this subpart apply to?
149.401 What are the general requirements for firefighting and fire protection equipment?
149.402 What firefighting and fire protection equipment must be approved by the Coast Guard?
149.403 How may I request the use of alternate or supplemental firefighting and fire prevention equipment or procedures?

FIREFIGHTING REQUIREMENTS

149.404 Can I use firefighting equipment that has no Coast Guard standards?
149.405 How are fire extinguishers classified?
149.406 What are the approval requirements for a fire extinguisher?
149.407 Must fire extinguishers be on the deepwater port at all times?
149.408 What are the maintenance requirements for fire extinguishers?
149.409 How many fire extinguishers are needed?
149.410 Where must portable and semi-portable fire extinguishers be located?
149.411 What are the requirements for firemen's outfits?
149.412 How many fire axes are needed?
149.413 On a manned deepwater port, what spaces require a fixed fire extinguishing system?
149.414 What are the requirements for a fire detection and alarm system?
149.415 What are the requirements for a fire main system on a manned deepwater port?
149.416 What are the requirements for a dry chemical fire suppression system?
149.417 What firefighting equipment must a helicopter landing deck on a manned deepwater port have?
149.418 What fire-protection system must a helicopter fueling facility have?
149.419 Can the water supply for the helicopter deck fire protection system be part of a fire water system?
149.420 What are the fire protection requirements for escape routes?
149.421 What is the requirement for a previously approved fire detection and alarm system on a deepwater port?

Subpart E—Aids to Navigation

GENERAL

149.500 What does this subpart do?
149.505 What are the general requirements for aids to navigation?
149.510 How do I get permission to establish an aid to navigation?

LIGHTS

149.520 What kind of lights are required?

LIGHTS ON PLATFORMS

149.535 What are the requirements for rotating beacons on platforms?

LIGHTS ON SINGLE POINT MOORINGS

149.540 What are the requirements for obstruction lights on an single point mooring?

LIGHTS ON FLOATING HOSE STRINGS

149.550 What are the requirements for lights on a floating hose string?

LIGHTS ON BUOYS USED TO DEFINE TRAFFIC LANES

149.560 How must buoys used to define traffic lanes be marked and lighted?
149.565 What are the required characteristics and intensity of lights on buoys used to define traffic lanes?

MISCELLANEOUS

149.570 How is a platform, single point mooring, or submerged turret loading identified?
149.575 How must objects protruding from the water, other than platforms and single point moorings, be marked?
149.580 What are the requirements for a radar beacon?
149.585 What are the requirements for sound signals?

Subpart F—Design and Equipment

GENERAL

149.600 What does this subpart do?
149.610 What must the District Commander be notified of and when?
149.615 What construction drawings and specifications are required?
149.620 What happens when the Commandant (CG–5P) reviews and evaluates the construction drawings and specifications?
149.625 What are the design standards?

STRUCTURAL FIRE PROTECTION

149.640 What are the requirements for fire protection systems?
149.641 What are the structural fire protection requirements for accommodation spaces and modules?

SINGLE POINT MOORINGS

149.650 What are the requirements for single point moorings and their attached hoses?

HELICOPTER FUELING FACILITIES

149.655 What are the requirements for helicopter fueling facilities?

EMERGENCY POWER

149.660 What are the requirements for emergency power?

GENERAL ALARM SYSTEM

149.665 What are the requirements for a general alarm system?
149.670 What are the requirements for marking a general alarm system?

PUBLIC ADDRESS SYSTEM

149.675 What are the requirements for the public address system?

MEDICAL TREATMENT ROOMS

149.680 What are the requirements for medical treatment rooms?
149.685 May a medical treatment room be used for other purposes?

MISCELLANEOUS

149.690 What are the requirements for means of escape, personnel landings, guardrails, similar devices, and for noise limits?

MEANS OF ESCAPE

149.691 What means of escape are required?
149.692 Where must they be located?

PERSONNEL LANDINGS

149.693 What are the requirements for personnel landings on manned deepwater ports?

GUARDRAILS AND SIMILAR DEVICES

149.694 What are the requirements for catwalks, floors, and openings?
149.695 What are the requirements for stairways?
149.696 What are the requirements for a helicopter landing deck safety net?

NOISE LIMITS

149.697 What are the requirements for a noise level survey?

PORTABLE LIGHTS

149.700 What kind of portable lights may be used on a deepwater port?

AUTHORITY: 33 U.S.C. 1504; Department of Homeland Security Delegation No. 0170.1 (75).

SOURCE: USCG–1998–3884, 71 FR 57651, Sept. 29, 2006, unless otherwise noted.

EDITORIAL NOTE: Nomenclature changes to part 149 appear by USCG–2010–0351, 75 FR 36284, June 25, 2010.

Subpart A—General

§ 149.1 What does this part do?

This part provides requirements for the design and construction of deepwater ports. It also provides the requirements for equipment for deepwater ports.

§ 149.5 What definitions apply to this part?

Definitions applicable to this part appear in 33 CFR 148.5. In addition, the following terms are used in this part and have the indicated meanings:

Accommodation module means a module with one or more accommodation spaces that is individually contracted and may be used for one or more facilities.

Major conversion means a conversion, as determined by the Commandant (CG–5P), that substantially changes the dimensions of a facility, substantially changes the water depth capability of a fixed facility, substantially changes the carrying capacity of a floating facility, substantially changes the processing equipment, changes the type of a facility, substantially prolongs the life of a facility, or otherwise so changes the facility that it is essentially a new facility.

Service space means a space used for a galley, a pantry containing cooking appliances, a storeroom, or a workshop other than those in industrial areas, and trunks to those spaces.

Sleeping space means a space provided with bunks for sleeping.

[USCG–1998–3884, 71 FR 57651, Sept. 29, 2006, as amended by USCG–2013–0397, 78 FR 39178, July 1, 2013]

§ 149.10 Where can the operator obtain a list of Coast Guard-approved equipment?

Where equipment in this subchapter must be of an approved type, the equipment must be specifically approved by the Commandant (CG–5P) and the Coast Guard Marine Safety Center. A list of approved equipment, including all of the approval series, is available at: *http://cgmix.uscg.mil/Equipment/Default.aspx*.

[USCG–2013–0397, 78 FR 39178, July 1, 2013]

§ 149.15 What is the process for submitting alterations and modifications affecting the design and construction of a deepwater port?

(a) Alterations and modifications affecting the design and construction of a deepwater port must be submitted to the Commandant (CG–5) for review and approval if:

(1) A license has not yet been issued; or,

(2) A license has been issued but the port has not commenced operations; or,

(3) The alteration and modification are deemed a major conversion; or,

(4) The alteration or modification substantially changes the manner in which the port operates or is not in accordance with a condition of the license.

(b) All other alterations and modifications to the deepwater port must be submitted to the Officer in Charge of Marine Inspection (OCMI) for review and approval.

(c) Approval for alterations and modifications proposed after a license has been issued will be contingent upon whether the proposed changes will affect the way the port operates, or any conditions imposed in the license.

(d) The licensee is not authorized to proceed with alterations prior to approval from the Commandant (CG–5) for the conditions outlined in paragraph (a) and approval by the cognizant OCMI as required in paragraph (b) of this section.

(e) The Commandant (CG–5), during the review and approval process of a proposed alteration or modification, may consult with the Marine Safety Center and cooperating Federal agencies possessing relevant technical expertise.

Subpart B—Pollution Prevention Equipment

§ 149.100 What does this subpart do?

This subpart provides requirements for pollution equipment on deepwater ports.

§ 149.103 What are the requirements for discharge containment and removal material and equipment?

(a) Each deepwater port must have a facility response plan that meets the requirements outlined in part 154, subpart F, of this chapter, and be approved by the cognizant Sector Commander, or MSU Commander with COTP and OCMI authority.

(b) The facility response plan must identify adequate spill containment and removal equipment for deepwater port-specific spill scenarios.

(c) Response equipment and material must be pre-positioned for ready access and use on board the deepwater port.

[USCG–1998–3884, 71 FR 57651, Sept. 29, 2006, as amended by USCG–2013–0397, 78 FR 39178, July 1, 2013]

§ 149.105 What are the requirements for the overflow and relief valves?

(a) Each oil and natural gas transfer system (OTS/NGTS) must include a relief valve that, when activated, prevents pressure on any component of the OTS/NGTS from exceeding its maximum rated pressure.

(b) The transfer system overflow or relief valve must not allow a discharge into the sea.

§ 149.110 What are the requirements for pipeline end manifold shutoff valves?

Each pipeline end manifold must have a shutoff valve capable of operating both manually and from the pumping platform complex.

§ 149.115 What are the requirements for blank flange and shutoff valves?

Each floating hose string must have a blank flange and a shutoff valve at the vessel's manifold end.

§ 149.120 What are the requirements for manually operated shutoff valves?

Each oil and natural gas transfer line passing through a single point mooring buoy system must have a manual shutoff valve.

§ 149.125 What are the requirements for the malfunction detection system?

(a) Each oil and natural gas system, between a pumping platform complex and the shore, must have a system that can detect and locate leaks and other malfunctions, particularly in high-risk areas.

(b) The marine transfer area on an oil deepwater port must be equipped with a monitoring system in accordance with § 154.525 of this chapter.

(c) A natural gas deepwater port must be equipped with gas detection equipment adequate for the type of transfer system, including storage and regasification, used. The Commandant (CG–5P) will evaluate proposed leak-detection systems for natural gas on an individual basis.

[USCG–1998–3884, 71 FR 57651, Sept. 29, 2006, as amended by USCG–2013–0397, 78 FR 39178, July 1, 2013]

§ 149.130 What are the requirements for the cargo transfer system alarm?

(a) Each cargo transfer system must have an alarm to signal a malfunction or failure in the system.

(b) The alarm must sound automatically in the control room and:

(1) Be capable of being activated at the pumping platform complex;

(2) Have a signal audible in all areas of the pumping platform complex, except in areas under paragraph (b)(3) of this section;

(3) Have a high intensity flashing light in areas of high ambient noise levels where hearing protection is required under § 150.615 of this chapter; and

(4) Be distinguishable from the general alarm.

(c) Tankers calling on unmanned deepwater ports must be equipped with a transfer system alarm described in this section.

§ 149.135 What should be marked on the cargo transfer system alarm switch?

Each switch for activating an alarm, and each audio or visual device for signaling an alarm, must be identified by the words ''Oil Transfer Alarm'' or ''Natural Gas Transfer Alarm'' in red letters at least 1 inch high on a yellow background.

§ 149.140 What communications equipment must be on a deepwater port?

(a) Each deepwater port must have the following communications equipment:

(1) A system for continuous two-way voice communication among the deepwater port, the tankers, the support vessels, and other vessels operating at the deepwater port. The system must be usable and effective in all phases of a transfer and in all conditions of weather at the deepwater port;

(2) A means to indicate the need to use the communication system required by this section, even if the means is the communication system itself; and

(3) Equipment that, for each portable means of communication used to meet the requirements of this section, is:

(i) Certified under 46 CFR 111.105–11 to be operated in Group D, Class 1, Division 1 Atmosphere; and,

(ii) Permanently marked with the certification required in paragraph (a)(3)(i) of this section. As an alternative to this marking requirement, a document certifying that the portable radio devices in use are in compliance with this section may be kept at the deepwater port.

(b) The communication system of the tank ship mooring at an unmanned deepwater port will be deemed the primary means of communicating with support vessels, shore side, etc.

[USCG–1998–3884, 71 FR 57651, Sept. 29, 2006, as amended by USCG–2013–0397, 78 FR 39178, July 1, 2013]

§ 149.145 What are the requirements for curbs, gutters, drains, and reservoirs?

Each pumping platform complex must have enough curbs, gutters, drains, and reservoirs to collect, in the reservoirs, all oil and contaminants not authorized for discharge into the ocean according to the deepwater port's National Pollution Discharge Elimination System permit.

[USCG–1998–3884, 71 FR 57651, Sept. 29, 2006, as amended by USCG–2013–0397, 78 FR 39178, July 1, 2013]

Subpart C—Lifesaving Equipment

§ 149.300 What does this subpart do?

This subpart provides requirements for lifesaving equipment on deepwater ports.

MANNED DEEPWATER PORT REQUIREMENTS

§ 149.301 What are the requirements for lifesaving equipment?

(a) *Manned Deepwater Port.* Each deepwater port on which at least one person occupies an accommodation space for more than 30 consecutive days in any successive 12-month period must comply with the requirements for lifesaving equipment in this subpart.

(b) *Unmanned Deepwater Port.* Each deepwater port, not under paragraph (a) of this section, must comply with the requirements for lifesaving equipment for unmanned deepwater ports in this subpart.

[USCG–1998–3884, 71 FR 57651, Sept. 29, 2006, as amended by USCG–2013–0397, 78 FR 39178, July 1, 2013]

§ 149.302 What are the requirements when lifesaving equipment is repaired or replaced?

When lifesaving equipment is replaced, or when the deepwater port undergoes a repair, alteration, or modification that involves replacing or adding to the lifesaving equipment, the new lifesaving equipment must meet the requirements of this subpart.

§ 149.303 What survival craft and rescue boats may be used on a manned deepwater port?

(a) Each survival craft on a manned deepwater port must be one of the following:

(1) A lifeboat meeting the requirements of § 149.306 of this part; or

(2) A liferaft meeting the requirements of § 149.308 of this part.

(b) Each rescue boat on a manned deepwater port must be a rescue boat meeting the requirements of § 149.314 of this part.

[USCG–1998–3884, 71 FR 57651, Sept. 29, 2006, as amended by USCG–2013–0397, 78 FR 39179, July 1, 2013]

§ 149.304 What type and how many survival craft and rescue boats must a manned deepwater port have?

(a) Except as specified under § 149.305 of this part, each manned deepwater port must have at least the type and number of survival craft and the number of rescue boats indicated for the deepwater port in paragraphs (a)(1) through (a)(5) of this section.

(1) For a deepwater port with 30 or fewer persons on board:

(i) One or more lifeboats with a total capacity of 100 percent of the personnel on board;

(ii) One or more liferafts with a total capacity of 100 percent of the personnel on board; and

(iii) One rescue boat, except that the rescue boat is not required for deepwater ports with eight or fewer persons on board.

(2) For a deepwater port with 31 or more persons on board:

(i) At least two lifeboats with a total capacity of 100 percent of the personnel on board;

(ii) One or more liferafts with a total capacity so that, if the survival craft at any one location are rendered unusable, there will be craft remaining with a total capacity of 100 percent of the personnel on board; and

(iii) One rescue boat.

(3) Lifeboats may be substituted for liferafts.

(4) Capacity refers to the total number of persons on the deepwater port at any one time, not including temporary personnel. Temporary personnel include: contract workers, official visitors, and any other persons who are not permanent employees. See § 149.305 of this part for additional survival craft requirements when temporary personnel are on board.

(5) The required lifeboats may be used as rescue boats if the lifeboats also meet the requirements for rescue boats in § 149.314 of this part.

(b) Deepwater ports consisting of novel structures or a combination of fixed and/or floating structures may require additional survival craft as deemed necessary by the Commandant (CG–5P). In these cases, the type and number of survival craft must be specified in the operations manual.

[USCG–1998–3884, 71 FR 57651, Sept. 29, 2006, as amended by USCG–2013–0397, 78 FR 39179, July 1, 2013]

§ 149.305 What are the survival craft requirements for temporary personnel?

(a) When temporary personnel are on board a manned deepwater port and the complement exceeds the capacity of the survival craft required under § 149.304 of this part, the deepwater port must have additional liferafts to ensure that the total capacity of the survival craft is not less than 150 percent of the personnel on board at any time.

(b) The liferafts required in paragraph (a) of this section need not meet the launching requirements of paragraph (b) to § 149.308 of this part, but must comply with the stowage requirements of 46 CFR 108.530(c).

[USCG–1998–3884, 71 FR 57651, Sept. 29, 2006, as amended by USCG–2013–0397, 78 FR 39179, July 1, 2013]

§ 149.306 What are the requirements for lifeboats?

(a) Lifeboats must be:

(1) Totally enclosed, fire-protected, and approved under approval series 160.135; and

(2) If the hull or canopy is of aluminum, it must be protected in its stowage position by a water spray system meeting the requirements of 46 CFR 34.25.

(b) Each lifeboat must have at least the provisions and survival equipment required by 46 CFR 108.575(b).

(c) Except for boathooks, the equipment under paragraph (b) of this section must be securely stowed in the lifeboat.

(d) Each lifeboat must have a list of the equipment it is required to carry under paragraph (c) of this section. The list must be posted in the lifeboat.

(e) The manufacturer's instructions for maintenance and repair of the lifeboat, required under § 150.502(a) of this chapter, must be in the lifeboat or on the deepwater port.

§ 149.307 What are the requirements for free-fall lifeboats?

All free-fall lifeboats must be approved under approval series 160.135.

§ 149.308 What are the requirements for liferafts?

(a) Each liferaft must be an inflatable liferaft approved under approval series 160.151, or a rigid liferaft approved under approval series 160.118.

(b) Except as under § 149.305(b) of this subpart, each inflatable or rigid liferaft, boarded from a deck that is more than 4.5 meters (14.75 feet) above the water, must be davit-launched or served by a marine evacuation system complying with § 149.309 to this subpart.

§ 149.309 What are the requirements for marine evacuation systems?

All marine evacuation systems must be approved under approval series 160.175 and comply with the launching arrangement requirements for mobile offshore drilling units in 46 CFR 108.545.

§ 149.310 What are the muster and embarkation requirements for survival craft?

Muster and embarkation arrangements for survival craft must comply with 46 CFR 108.540.

§ 149.311 What are the launching and recovery requirements for lifeboats?

(a) Each lifeboat launched by falls must have a launching and recovery system that complies with 46 CFR 108.555.

(b) Each free-fall lifeboat must have a launching and recovery system that complies with 46 CFR 108.557.

§ 149.312 What are the launching equipment requirements for inflatable liferafts?

(a) Each inflatable liferaft not intended for davit launching must be capable of rapid deployment.

(b) Each liferaft capable of being launched by a davit must have the following launching equipment at each launching station:

(1) A launching device approved under approval series 160.163; and

(2) A mechanical disengaging apparatus approved under approval series 160.170.

(c) The launching equipment must be operable, both from within the liferaft and from the deepwater port.

(d) Winch controls must be located so that the operator can observe the liferaft launching.

(e) The launching equipment must be arranged so that a loaded liferaft does not have to be lifted before it is lowered.

(f) Not more than two liferafts may be launched from the same set of launching equipment.

§ 149.313 How must survival craft be arranged?

The operator must arrange survival craft so that they meet the requirements of 46 CFR 108.525 (a) and § 108.530 and so that they—

(a) Are readily accessible in an emergency;

(b) Are accessible for inspection, maintenance, and testing;

(c) Are in locations clear of overboard discharge piping or openings, and obstructions below; and

(d) Are located so that survival craft with an aggregate capacity to accommodate 100% of the total number of persons authorized to be berthed are readily accessible from the personnel berthing area.

[USCG–1998–3884, 71 FR 57651, Sept. 29, 2006, as amended by USCG–2013–0397, 78 FR 39179, July 1, 2013]

§ 149.314 What are the approval and stowage requirements for rescue boats?

(a) Rescue boats must be approved under approval series 160.156. A lifeboat is acceptable as a rescue boat if it also meets the requirements for a rescue boat under approval series 160.156.

(b) The stowage of rescue boats must comply with 46 CFR 108.565.

§ 149.315 What embarkation, launching, and recovery arrangements must rescue boats meet?

(a) Each rescue boat must be capable of being launched in a current of up to 5 knots. A painter may be used to meet this requirement.

(b) Each rescue boat embarkation and launching arrangement must permit the rescue boat to be boarded and launched in the shortest possible time.

(c) If the rescue boat is one of the deepwater port's survival craft, then the rescue boat must comply with the muster and embarkation arrangement requirements of § 149.310 of this part.

(d) The rescue boat must comply with the embarkation arrangement requirements of 46 CFR 108.555.

(e) If the launching arrangement uses a single fall, the rescue boat may have an automatic disengaging apparatus, approved under approval series 160.170, instead of a lifeboat release mechanism.

(f) The rescue boat must be capable of being recovered rapidly when loaded with its full complement of persons and equipment. If a lifeboat is being used as a rescue boat, rapid recovery must be possible when loaded with its lifeboat equipment and a rescue boat's complement of at least six persons.

(g) Each rescue boat launching appliance must be fitted with a powered winch motor.

(h) Each rescue boat launching appliance must be capable of hoisting the rescue boat, when loaded with its full complement of persons and equipment, at a rate of not less than 59 feet per minute.

(i) The operator may use an onboard crane to launch a rescue boat if the crane's launching system meets the requirements of this section.

[USCG–1998–3884, 71 FR 57651, Sept. 29, 2006, as amended by USCG–2013–0397, 78 FR 39179, July 1, 2013]

§ 149.316 What are the requirements for lifejackets?

(a) Each lifejacket must be approved under approval series 160.002, 160.005, 160.055, 160.077, or 160.176.

(b) Each lifejacket must have a light approved under approval series 161.012. Each light must be securely attached to the front shoulder area of the lifejacket.

(c) Each lifejacket must have a whistle permanently attached by a cord.

(d) Each lifejacket must be fitted with Type I retroreflective material, approved under approval series 164.018.

§ 149.317 How and where must lifejackets be stowed?

(a) The operator must ensure that lifejackets are stowed in readily accessible places in or adjacent to accommodation spaces.

(b) Lifejacket stowage containers and the spaces housing the containers must not be capable of being locked.

(c) The operator must mark each lifejacket container or lifejacket stowage location with the word ''LIFEJACKETS'' in block letters, and the quantity, identity, and size of the lifejackets stowed inside the container or at the location.

§ 149.318 Must every person on the deepwater port have a lifejacket?

The operator must provide a lifejacket that complies with § 149.316 of this part for each person on a manned deepwater port.

[USCG–1998–3884, 71 FR 57651, Sept. 29, 2006, as amended by USCG–2013–0397, 78 FR 39179, July 1, 2013]

§ 149.319 What additional lifejackets must the deepwater port have?

For each person on duty in a location where the lifejacket required by § 149.317 of this part is not readily accessible, an additional lifejacket must be stowed so as to be readily accessible to that location.

[USCG–2013–0397, 78 FR 39179, July 1, 2013]

§ 149.320 What are the requirements for ring life buoys?

(a) Ring life buoys must be approved under approval series 160.050 or 160.150, for SOLAS-approved equipment.

(b) Each ring life buoy must have a floating electric water light approved under approval series 161.010. The operator must ensure that the light to the ring life buoy is attached by a lanyard of 12-thread manila, or a synthetic rope of equivalent strength, not less than 3 feet nor more than 6 feet in length. The light must be mounted on a bracket near the ring life buoy so that, when the ring life buoy is cast loose, the light will be pulled free of the bracket.

(c) To each ring life buoy, there must be attached a buoyant line of 100 feet in length, with a breaking strength of at least 5 kilonewtons force. The end of the line must not be secured to the deepwater port.

(d) Each ring life buoy must be marked with Type II retroreflective material, approved under approval series 164.018.

§ 149.321 How many ring life buoys must be on each deepwater port?

There must be at least four approved ring life buoys on each manned deepwater port.

§ 149.322 Where must ring life buoys be located and how must they be stowed?

(a) The operator must locate one ring life buoy on each side of the deepwater port and one near each external stairway leading to the water. One buoy per side may be used to satisfy both these requirements.

(b) Each ring life buoy must be stowed on or in a rack that is readily accessible in an emergency. The ring life buoy must not be permanently secured in any way to the rack or the deepwater port.

[USCG–1998–3884, 71 FR 57651, Sept. 29, 2006, as amended by USCG–2013–0397, 78 FR 39179, July 1, 2013]

§ 149.323 What are the requirements for first aid kits?

(a) Each manned deepwater port must have an industrial first aid kit, approved by an appropriate organization, such as the American Red Cross, for the maximum number of persons on the deepwater port.

(b) The first aid kit must be maintained in a space designated as a medical treatment room or, if there is no medical treatment room, under the custody of the person in charge.

(c) The operator must ensure that each first aid kit is accompanied by a copy of either the Department of Health and Human Services Publication No. (PHS) 84–2024, ''The Ship's Medicine Chest and Medical Aid at Sea,'' available from the Superintendent of Documents, U.S. Government Printing Office, Washington, DC 20402, or the ''American Red Cross First Aid and Safety Handbook,'' available from Little Brown and Company, 3 Center Plaza, Boston, MA 02018.

§ 149.324 What are the requirements for litters?

Each manned deepwater port must have at least one Stokes or other suitable litter, capable of safely hoisting an injured person. The litter must be readily accessible in an emergency.

§ 149.325 What emergency communications equipment must be on a manned deepwater port?

Each manned deepwater port must have a radio, telephone, or other means of emergency communication with the shore, vessels, and facilities in the vicinity in the event the primary communications system outlined in § 149.140 of this part fails. This communication equipment must have an emergency power source.

[USCG–1998–3884, 71 FR 57651, Sept. 29, 2006, as amended by USCG–2013–0397, 78 FR 39179, July 1, 2013]

§ 149.326 What are the immersion suit requirements?

Each manned deepwater port located north of 32 degrees North latitude must comply with the immersion suit requirements in 46 CFR 108.580.

§ 149.327 What are the approval requirements for work vests and anti-exposure (deck) suits?

All work vests and anti-exposure (deck) suits on a manned deepwater port must be of a buoyant type approved under:

(a) Approval series 160.053 as a work vest;

(b) Approval series 160.053 or 160.153 as an anti-exposure suit; or

(c) Approval series 160.077 as a commercial hybrid personal flotation device.

§ 149.328 How must work vests and anti-exposure (deck) suits be stowed?

All work vests and deck suits must be stowed separately from lifejackets and in a location that is not easily confused with a storage area for lifejackets.

§ 149.329 How must work vests and deck suits be marked?

All work vests and deck suits must be fitted with Type I retroreflective material, approved under approval series 164.018.

§ 149.330 When may a work vest or deck suit be substituted for a lifejacket?

(a) A work vest or deck suit meeting the requirements of § 149.326 of this part may be used instead of a lifejacket when personnel are working near or over water.

(b) Work vests or deck suits may not be substituted for any portion of the

number of approved lifejackets required on the deepwater port or attending vessel for use during drills and emergencies.

[USCG–1998–3884, 71 FR 57651, Sept. 29, 2006, as amended by USCG–2013–0397, 78 FR 39179, July 1, 2013]

§ 149.331 What are the requirements for hybrid personal flotation devices?

(a) The operator must ensure that the use and stowage of all commercial hybrid personal flotation devices (PFDs) used as work vests comply with the procedures required for them in 46 CFR 160.077–29, and all limitations, if any, marked on them.

(b) All commercial hybrid PFDs on the deepwater port must be of the same or similar design and must have the same method of operation.

§ 149.332 What are the requirements for inflatable lifejackets?

(a) Each inflatable lifejacket must be approved under approval series 160.176.

(b) All inflatable lifejackets on a deepwater port must:

(1) Be used and stowed according to the procedures contained in the manual required for them under 46 CFR 160.176–21;

(2) Be marked with all limitations, if any; and

(3) Be of the same or similar design and have the same method of operation.

§ 149.333 What are the marking requirements for lifesaving equipment?

(a) Each lifeboat, rigid liferaft, and survival capsule must be marked on two opposite outboard sides with the name, number, or other inscription identifying the deepwater port on which it is placed, and the number of persons permitted on the craft. Each paddle or oar for these crafts must also be marked with an inscription identifying the deepwater port. The letters and numbers must be at least 100 millimeters (3.94 inches) high on a contrasting background.

(b) Each inflatable liferaft must be marked to meet 46 CFR 160.151–33, and, after each servicing, marked to meet 46 CFR 160.151–57(m).

(c) Each lifejacket and ring life buoy must be conspicuously marked with the name, number, or other inscription identifying the deepwater port on which it is placed. The letters and numbers must be at least 1.5 inches (38 mm) high on a contrasting background. Lifejackets and ring life buoys that accompany mobile crews to unmanned deepwater ports may be marked with the operator's name and field designation.

UNMANNED DEEPWATER PORT REQUIREMENTS

§ 149.334 Who must ensure compliance with the requirements for unmanned deepwater ports?

The owner or operator of an unmanned deepwater port must ensure that applicable requirements are complied with on that deepwater port.

§ 149.335 When are people prohibited from being on an unmanned deepwater port?

No person may be on an unmanned deepwater port unless all requirements of this part are met.

§ 149.336 What are the requirements for lifejackets?

(a) Except as provided in paragraph (b) of this section, each unmanned deepwater port must have at least one lifejacket complying with § 149.316 of this part for each person on the deepwater port. The lifejackets need to be available for use on the deepwater port only when persons are onboard.

(b) During helicopter visits, personnel who have aircraft type of lifejackets may use them as an alternative to the requirements of paragraph (a) of this section.

[USCG–1998–3884, 71 FR 57651, Sept. 29, 2006, as amended by USCG–2013–0397, 78 FR 39179, July 1, 2013]

§ 149.337 What are the requirements for ring life buoys?

(a) Each unmanned deepwater port must have at least one ring life buoy complying with § 149.320 to this part.

(b) If there is no space on the deepwater port for the ring life buoys, they must be on a manned vessel located

alongside of the deepwater port while the persons are on the deepwater port.

[USCG–1998–3884, 71 FR 57651, Sept. 29, 2006, as amended by USCG–2013–0397, 78 FR 39179, July 1, 2013]

§ 149.338 What are the requirements for immersion suits?

(a) Each unmanned deepwater port located north of 32 degrees North latitude must comply with the immersion suit requirements applicable to mobile offshore drilling units under 46 CFR 108.580, and immersion suits must be approved under approval series 160.171. Except as under paragraph (b) of this section, the immersion suits need be on the deepwater port only when persons are on board.

(b) If an attending vessel is moored to the unmanned deepwater port, the suits may be stowed on the vessel, instead of on the deepwater port.

§ 149.339 What is the requirement for previously approved lifesaving equipment on a deepwater port?

Lifesaving equipment such as lifeboats, liferafts, and PFDs on a deepwater port on January 1, 2004, need not meet the requirements of this subpart until the equipment needs replacing, provided it is periodically tested and maintained and in good operational condition.

§ 149.340 What are the requirements for lifesaving equipment that is not required by this subchapter?

Each item of lifesaving equipment on a deepwater port that is not required by this subchapter must be approved by the Commandant (CG–5P).

[USCG–1998–3884, 71 FR 57651, Sept. 29, 2006, as amended by USCG–2013–0397, 78 FR 39179, July 1, 2013]

Subpart D—Firefighting and Fire Protection Equipment

§ 149.400 What does this subpart apply to?

This subpart applies to all deepwater ports except unmanned deepwater ports consisting of a submerged turret loading or comparable configuration in which cargo transfer operations are conducted solely aboard the tank vessel by the vessel crew.

[USCG–1998–3884, 71 FR 57651, Sept. 29, 2006, as amended by USCG–2013–0397, 78 FR 39179, July 1, 2013]

§ 149.401 What are the general requirements for firefighting and fire protection equipment?

Each deepwater port must comply with the requirements for firefighting and fire protection equipment in this subpart.

§ 149.402 What firefighting and fire protection equipment must be approved by the Coast Guard?

Except as permitted under § 149.403, § 149.415(c) or (d), § 149.419(a)(1), or § 149.420 of this part, all required firefighting and fire protection equipment on a deepwater port must be approved by the Commandant (CG–ENG). Firefighting and fire protection equipment that supplements required equipment must also be approved by the Commandant (CG–ENG), unless approval by the Officer in Charge of Marine Inspection (OCMI) is requested and granted pursuant to § 149.403 of this subpart.

[USCG–1998–3884, 71 FR 57651, Sept. 29, 2006, as amended by USCG–2013–0397, 78 FR 39179, July 1, 2013]

§ 149.403 How may I request the use of alternate or supplemental firefighting and fire prevention equipment or procedures?

(a) The operator may request the use of alternate or supplemental equipment or procedures than those required in this subchapter.

(b) Upon request, the Sector Commander, or MSU Commander with COTP and OCMI authority, may allow the use of alternate equipment or procedures if the alternatives will:

(1) Accomplish the purposes for the requirement; and

(2) Provide a degree of safety equivalent to or greater than that provided by the requirement.

(c) The Sector Commander, or MSU Commander with COTP and OCMI authority, may require that the requesting party:

(1) Explain why applying the requirement would be unreasonable or impracticable; or

(2) Submit engineering calculations, tests, or other data to demonstrate how the requested alternative would comply with paragraph (b) of this section.

(d) The Sector Commander, or MSU Commander with COTP and OCMI authority, may determine, on a case-by-case basis, that the Commandant (CG–ENG) must approve the use of the alternate equipment or procedure.

[USCG–1998–3884, 71 FR 57651, Sept. 29, 2006, as amended by USCG–2013–0397, 78 FR 39179, July 1, 2013]

FIREFIGHTING REQUIREMENTS

§ 149.404 Can I use firefighting equipment that has no Coast Guard standards?

A deepwater port may use firefighting equipment for which there is no Coast Guard standard as supplemental equipment, pursuant to § 149.403 of this part, if the equipment does not endanger the deepwater port or the persons aboard it in any way. This equipment must be listed and labeled by a nationally recognized testing laboratory, as that term is defined in 29 CFR 1910.7, and it must be maintained in good working condition.

[USCG–1998–3884, 71 FR 57651, Sept. 29, 2006, as amended by USCG–2013–0397, 78 FR 39179, July 1, 2013]

§ 149.405 How are fire extinguishers classified?

(a) Portable and semi-portable extinguishers on a manned deepwater port must be classified using the Coast Guard's marine rating system of a combination letter-and-number symbol in which the letter indicates the type of fire that the extinguisher is designed to extinguish, and the number indicates the relative size of the extinguisher.

(b) The letter designations are as follows:

(1) ''A'' for fires of ordinary combustible materials where the quenching and cooling effects of water, or solutions containing large percentages of water, are of primary importance;

(2) ''B'' for fires of flammable liquids, greases, or other thick flammable substances where a blanketing effect is essential; and

(3) ''C'' for fires in electrical equipment where the use of a non-conducting extinguishing agent is of primary importance.

(c) The number designations for size range from ''I'' for the smallest extinguisher to ''V'' for the largest. Sizes I and II are portable extinguishers. Sizes III, IV, and V are semi-portable extinguishers that must be fitted with suitable hose and nozzle, or other practicable means, so that all portions of the space concerned may be covered. Examples of size graduations for some of the typical portable and semi-portable extinguishers are set forth in table 149.405 of this section.

TABLE 149.405—PORTABLE AND SEMI-PORTABLE EXTINGUISHERS

Classification type-size	Foam liters (gallons)	Carbon dioxide kilograms (pounds)	Dry chemical kilograms (pounds)
A–II	9.5 (2.5)	.....	[1] 2.25 (5)
B–II	9.5 (2.5)	6.7 (15)	4.5 (10)
C–II	.....	6.7 (15)	4.5 (10)
B–IV	7.6 (20)	22.5 (50)	13.5 (30)
B–V	15.2 (40)	[2] 45 (100)	[2] 22.5 (50)

NOTES:
[1] Must be specifically approved as a type ''A,'' ''B,'' or ''C'' extinguisher.
[2] For outside use, double the quantity of agent that must be carried.

[USCG–1998–3884, 71 FR 57651, Sept. 29, 2006, as amended by USCG–2013–0397, 78 FR 39179, July 1, 2013]

§ 149.406 What are the approval requirements for a fire extinguisher?

All portable and semi-portable fire extinguishers must be of an approved

type under 46 CFR part 162, subparts 162.028 and 162.039, respectively.

§ 149.407 Must fire extinguishers be on the deepwater port at all times?

(a) The fire extinguishers required by § 149.409 of this part must be on all manned deepwater ports at all times.

(b) The fire extinguishers required by § 149.409 of this part need be on unmanned deepwater ports only when personnel are working on the deepwater port during cargo transfer operations, or performing maintenance duties.

[USCG–1998–3884, 71 FR 57651, Sept. 29, 2006, as amended by USCG–2013–0397, 78 FR 39179, July 1, 2013]

§ 149.408 What are the maintenance requirements for fire extinguishers?

All fire extinguishers must be maintained in good working order and serviced annually in accordance with 46 CFR 107.235.

§ 149.409 How many fire extinguishers are needed?

Each particular location must have the number of fire extinguishers required by Table 149.409 of this section.

TABLE 149.409—PORTABLE AND SEMI-PORTABLE EXTINGUISHERS, MINIMUM QUANTITY AND LOCATION

Space	Classification	Minimum quantity and location
(a) Safety Areas:		
(1) Communicating corridors.	A–II	One in each main corridor or stairway not more than 150 feet apart.
(2) Radio room	C–II	One outside or near each radio room exit.
(b) Accommodation Spaces:		
(1) Sleeping quarters	A–II	One in each sleeping space that fits more than four persons.
(c) Service Spaces:		
(1) Galleys	B–II or CII	One for each 2,500 square feet or fraction thereof, for hazards involved.
(2) Storerooms	A–II	One for each 2,500 square feet or fraction thereof, located near each exit, either inside or outside the space.
(3) Paint room	B–II	One outside each paint room exit.
(d) Machinery Spaces:		
(1) Gas-fired boilers	B–II OR C–II	Two.
(2) Gas-fired boilers	B–V	One. [1]
(3) Oil-fired boilers	B–II	Two.
(4) Oil-fired boilers	B–V	Two. [1]
(5) Internal combustion or gas turbine engines.	B–II	One for each engine. [2]
(6) Open electric motors and generators.	C–II	One for each of two motors or generators. [3]
(e) Helicopter Areas:		
(1) Helicopter landing decks.	B–V	One at each access route.
(2) Helicopter fueling facility.	B–V	One at each fuel transfer facility.[4]

[1] Not required if a fixed system is installed.
[2] If the engine is installed on a weather deck or is open to the atmosphere at all times, one B–II may be used for every three engines.
[3] Small electrical appliances, such as fans, are exempt.
[4] Not required if a fixed foam system is installed in accordance with 46 CFR 108.489.

[USCG–1998–3884, 71 FR 57651, Sept. 29, 2006, as amended by USCG–2013–0397, 78 FR 39179, July 1, 2013]

§ 149.410 Where must portable and semi-portable fire extinguishers be located?

All portable and semi-portable fire extinguishers described in Table 149.409 of this part must be located in the open so as to be readily seen.

[USCG–1998–3884, 71 FR 57651, Sept. 29, 2006, as amended by USCG–2013–0397, 78 FR 39179, July 1, 2013]

§ 149.411 What are the requirements for firemen's outfits?

(a) Each manned deepwater port with nine or more persons must have at

least two firemen's outfits complying with 46 CFR 108.497.

(b) The person in charge of safety must ensure that:

(1) At least two people trained in the use of firemen's outfits are on the deepwater port at all times;

(2) Each fireman's outfit and its spare equipment are stowed together in a readily accessible container or locker. No more than one outfit must be stowed in the same container or locker. The two containers or lockers must be located in separate areas to ensure that at least one is available at all times in the event of a fire; and

(3) Firemen's outfits are not used for any purpose other than firefighting.

[USCG–1998–3884, 71 FR 57651, Sept. 29, 2006, as amended by USCG–2013–0397, 78 FR 39179, July 1, 2013]

§ 149.412 How many fire axes are needed?

Each manned deepwater port must have at least two fire axes as required by 46 CFR 108.499.

§ 149.413 On a manned deepwater port, what spaces require a fixed fire extinguishing system?

The manned deepwater port spaces or systems listed in paragraphs (a) through (c) of this section must be protected by an approved fixed gaseous or other approved fixed-type extinguishing system.

(a) Paint lockers with a carrying capacity of more than 200 cubic feet, and similar spaces containing flammable liquids.

(b) Galley ranges or deep fat fryers.

(c) Each enclosed space containing internal combustion or gas turbine machinery with an aggregate power of more than 1,000 B.H.P., and any associated fuel oil units, purifiers, valves, or manifolds.

§ 149.414 What are the requirements for a fire detection and alarm system?

(a) All accommodation and service spaces on a manned deepwater port, and all spaces or systems on a manned or unmanned deepwater port for processing, storing, transferring, or regasifying liquefied natural gas, must have an automatic fire detection and alarm system that:

(1) Either complies with 46 CFR 108.405 or

(2) Is designed and installed in compliance with a national consensus standard, as that term is defined in 29 CFR 1910.2, for fire detection and fire alarm systems, and that complies with standards set by a nationally recognized testing laboratory, as that term is defined in 29 CFR 1910.7, for such systems or hardware.

(b) Sleeping quarters must be fitted with smoke detectors that have local alarms and that may or may not be connected to the central alarm panel.

(c) Each fire detection and fire alarm system must have both a visual alarm and an audible alarm at a normally manned area.

(d) Each fire detection and fire alarm system must be divided into zones to limit the area covered by a particular alarm signal.

§ 149.415 What are the requirements for a fire main system on a manned deepwater port?

(a) Each pumping platform complex must have a fixed fire main system. The system must either:

(1) Comply with 46 CFR 108.415 through 108.429 and 33 CFR 127.607 if it is a natural gas deepwater port; or

(2) Comply with a national consensus standard, as that term is defined in 29 CFR 1910.2, for such systems and hardware, and comply with the standards set by a nationally recognized testing laboratory, as that term is defined in 29 CFR 1910.7, for such systems and hardware.

(b) If the fire main system meets the requirements outlined in paragraph (a)(2) of this section, it must provide, at a minimum, protection to:

(1) Accommodation spaces;

(2) Accommodation modules;

(3) Control spaces; and

(4) Other areas frequented by deepwater port personnel.

(c) The hose system must be capable of reaching all parts of these spaces without difficulty.

(d) Under paragraph (a)(2) of this section, the fire main system may be part of a fire water system in accordance with 30 CFR 250.803.

(e) A fire main system for a natural gas deepwater port must also comply with 33 CFR 127.607.

[USCG–1998–3884, 71 FR 57651, Sept. 29, 2006, as amended by USCG–2013–0397, 78 FR 39179, July 1, 2013]

§ 149.416 What are the requirements for a dry chemical fire suppression system?

Each natural gas deepwater port must be equipped with a dry chemical system that meets the requirements of § 127.609 of this chapter.

§ 149.417 What firefighting equipment must a helicopter landing deck on a manned deepwater port have?

Each helicopter landing deck on a manned deepwater port must have the following:

(a) A fire hydrant and hose located near each stairway to the landing deck. If the landing deck has more than two stairways, only two stairways need to have a fire hydrant and hose. The fire hydrants must be part of the fire main system; and

(b) Portable fire extinguishers in the quantity and location as required in Table 149.409 of this part.

[USCG–1998–3884, 71 FR 57651, Sept. 29, 2006, as amended by USCG–2013–0397, 78 FR 39179, July 1, 2013]

§ 149.418 What fire protection system must a helicopter fueling facility have?

In addition to the portable fire extinguishers required under Table 149.409 of this part, each helicopter fueling facility must have a fire protection system complying with 46 CFR 108.489.

[USCG–1998–3884, 71 FR 57651, Sept. 29, 2006, as amended by USCG–2013–0397, 78 FR 39179, July 1, 2013]

§ 149.419 Can the water supply for the helicopter deck fire protection system be part of a fire water system?

(a) The water supply for the helicopter deck fire protection system required under § 149.420 or § 149.421 of this part may be part of:

(1) The fire water system, installed in accordance with Bureau of Ocean Energy Management regulations under 30 CFR 250.803; or

(2) The fire main system under § 149.415 of this part.

(b) If the water supply for the helicopter deck fire protection system is part of an independent accommodation fire main system, the piping design and hardware must be compatible with the system and must comply with the requirements for fire mains in 46 CFR 108.415 through 108.429.

[USCG–1998–3884, 71 FR 57651, Sept. 29, 2006, as amended by USCG–2013–0397, 78 FR 39179, July 1, 2013]

§ 149.420 What are the fire protection requirements for escape routes?

At least one escape route from an accommodation space or module to a survival craft or other means of evacuation must provide adequate protection. Separation of the escape route from the cargo area by steel construction, in accordance with 46 CFR 108.133, or equivalent protection is considered adequate protection for personnel escaping from fires and explosions. Additional requirements for escape routes are in subpart F of this part.

§ 149.421 What is the requirement for a previously approved fire detection and alarm system on a deepwater port?

An existing fire detection and alarm system on a deepwater port need not meet the requirements in this subpart until the system needs replacing, provided it is periodically tested and maintained in good operational condition.

Subpart E—Aids to Navigation

GENERAL

§ 149.500 What does this subpart do?

This subpart provides requirements for aids to navigation on deepwater ports.

§ 149.505 What are the general requirements for aids to navigation?

The following requirements apply to navigation aids under this subpart:

(a) Section 66.01–5 of this chapter, on application to establish, maintain, discontinue, change, or transfer ownership of an aid, except as under § 149.510 of this part;

(b) Section 66.01–25(a) and (c) of this chapter, on discontinuing or removing an aid. For the purposes of § 66.01–25(a) and (c) of this chapter, navigation aids at a deepwater port are considered Class I aids under § 66.01–15 of this chapter;

(c) Section 66.01–50 of this chapter, on protection of an aid from interference and obstruction; and

(d) Section 66.01–55 of this chapter, on transfer of ownership of an aid.

[USCG–1998–3884, 71 FR 57651, Sept. 29, 2006, as amended by USCG–2013–0397, 78 FR 39179, July 1, 2013]

§ 149.510 How do I get permission to establish an aid to navigation?

(a) To establish a navigation aid on a deepwater port, the licensee must submit an application under § 66.01–5 of this chapter, except that the application must be sent to the Commandant (CG–5P).

(b) At least 180 days before the installation of any structure at the site of a deepwater port, the licensee must submit an application for obstruction lights and other private navigation aids for the particular construction site.

(c) At least 180 days before beginning cargo transfer operations or changing the mooring facilities at the deepwater port, the licensee must submit an application for private aids to navigation.

[USCG–1998–3884, 71 FR 57651, Sept. 29, 2006, as amended by USCG–2013–0397, 78 FR 39179, July 1, 2013]

LIGHTS

§ 149.520 What kind of lights are required?

All deepwater ports must meet the general requirements for obstruction lights in part 67 of this chapter.

LIGHTS ON PLATFORMS

§ 149.535 What are the requirements for rotating beacons on platforms?

In addition to obstruction lights, the tallest platform of a deepwater port must have a lit rotating beacon that distinguishes the deepwater port from other surrounding offshore structures. The beacon must:

(a) Have an effective intensity of at least 15,000 candela;

(b) Flash at least once every 20 seconds;

(c) Provide a white light signal;

(d) Operate in wind speeds of up to 100 knots at a rotation rate that is within 6 percent of the operating speed displayed on the beacon;

(e) Have one or more leveling indicators permanently attached to the light, each with an accuracy of ±0.25 ° or better; and

(f) Be located:

(1) At least 60 feet (about 18.3 meters) above mean high water;

(2) Where the structure of the platform, or equipment mounted on the platform, does not obstruct the light in any direction; and

(3) So that it is visible all around the horizon.

LIGHTS ON SINGLE POINT MOORINGS

§ 149.540 What are the requirements for obstruction lights on a single point mooring?

(a) The lights for a single point mooring must meet the requirements for obstruction lights in part 67 of this chapter, except that the lights must be located at least 10 feet (3 meters) above mean high water.

(b) A submerged turret loading (STL) deepwater port is not required to meet the requirements for obstruction lights, provided it maintains at least a five-foot (1.5 meters) clearance beneath the net under keel clearance at the mean low water condition for all vessels transiting the area.

(c) An STL deepwater port that utilizes a marker buoy must be lighted in accordance with paragraph (a) of this section.

LIGHTS ON FLOATING HOSE STRINGS

§ 149.550 What are the requirements for lights on a floating hose string?

Hose strings that are floating or supported on trestles must display the following lights at night and during periods of restricted visibility:

(a) One row of yellow lights that must be:

(1) Flashing 50 to 70 times per minute;

(2) Visible all around the horizon;

(3) Visible for at least 2 miles (3.7 km) on a clear, dark night;

(4) Not less than 1 or more than 3.5 meters (3 to 11.5 feet) above the water;

(5) Approximately equally spaced;

(6) Not more than 10 meters (32.8 feet) apart where the hose string crosses a navigable channel; and

(7) Where the hose string does not cross a navigable channel, there must be a sufficient number to clearly show the hose string's length and course.

(b) Two red lights at each end of the hose string, including the ends in a channel where the hose string is separated to allow vessels to pass, whether open or closed. The lights must be:

(1) Visible all around the horizon;

(2) Visible for at least 2 miles (3.7 km) on a clear, dark night; and

(3) One meter (3 feet) apart in a vertical line with the lower light at the same height above the water as the flashing yellow light.

LIGHTS ON BUOYS USED TO DEFINE TRAFFIC LANES

§ 149.560 How must buoys used to define traffic lanes be marked and lighted?

(a) Each buoy that is used to define the lateral boundaries of a traffic lane at a deepwater port must meet § 62.25 of this chapter.

(b) The buoy must have an omni-directional light located at least 8 feet above the water.

(c) The buoy light must be located so that the structure of the buoy, or any other device mounted on the buoy, does not obstruct the light in any direction.

§ 149.565 What are the required characteristics and intensity of lights on buoys used to define traffic lanes?

(a) The buoy's light color that defines the lateral boundaries of a traffic lane must comply with the buoy color schemes in § 62.25 of this chapter.

(b) The buoy light may be fixed or flashing. If it is flashing, it must flash at intervals of not more than 6 seconds.

(c) Buoy lights must have an effective intensity of at least 25 candela.

MISCELLANEOUS

§ 149.570 How is a platform, single point mooring, or submerged turret loading identified?

(a) Each platform, single point mooring, or submerged turret loading (STL) that protrudes above the water or is marked by a buoy must display the name of the deepwater port and the name or number identifying the structure, so that the information is visible:

(1) From the water at all angles of approach to the structure; and

(2) From aircraft on approach to the structure if the structure is equipped with a helicopter pad.

(b) The information required in paragraph (a) of this section must be displayed in numbers and letters that are:

(1) At least 12 inches high;

(2) In vertical block style; and

(3) Displayed against a contrasting background.

(c) If an STL protrudes from the water, it must be properly illuminated in accordance with § 149.540 of this part.

[USCG–1998–3884, 71 FR 57651, Sept. 29, 2006, as amended by USCG–2013–0397, 78 FR 39179, July 1, 2013]

§ 149.575 How must objects protruding from the water, other than platforms and single point moorings, be marked?

(a) Each object protruding from the water that is within 100 yards of a platform or single point mooring (SPM) must be marked with white reflective tape.

(b) Each object protruding from the water that is more than 100 yards from a platform or SPM must meet the obstruction lighting requirements in this subpart for a platform.

§ 149.580 What are the requirements for a radar beacon?

(a) A radar beacon (RACON) must be located on the tallest platform of a pumping platform complex or other fixed structure of the deepwater port.

(b) The RACON must be an FCC-accepted RACON or a similar type.

(c) The RACON must transmit:

(1) In both 2900–3100 MHz and 9300–9500 MHz frequency bands; or

(2) If installed before July 8, 1991, in the 9320–9500 MHz frequency band; and

(3) Transmit a signal of at least 250 milliwatts radiated power that is omnidirectional and polarized in the horizontal plane;

(4) Transmit a two-element or more Morse code character, the length of which does not exceed 25 percent of the radar range expected to be used by vessels operating in the area;

(5) If of the frequency agile type, be programmed so that it will respond at least 40 percent of the time, but not more than 90 percent of the time, with a response-time duration of at least 24 seconds; and

(6) Be located at a minimum height of 15 feet above the highest deck of the platform and where the structure of the platform, or equipment mounted on the platform, does not obstruct the signal propagation in any direction.

§ 149.585 What are the requirements for sound signals?

(a) Each pumping platform complex must have a sound signal, approved under subpart 67.10 of this chapter, that has a 2-mile (3-kilometer) range. A list of Coast Guard-approved sound signals is available from any District Commander.

(b) Each sound signal must be:

(1) Located at least 10 feet, but not more than 150 feet, above mean high water; and

(2) Located where the structure of the platform, or equipment mounted on it, does not obstruct the sound of the signal in any direction.

Subpart F—Design and Equipment

GENERAL

§ 149.600 What does this subpart do?

This subpart provides general requirements for equipment and design on deepwater ports.

§ 149.610 What must the District Commander be notified of and when?

The District Commander must be notified of the following:

When—	The District Commander must be notified—
(a) Construction of a pipeline, platform, or single point mooring (SPM) is planned.	At least 30 days before construction begins.
(b) Construction of a pipeline, platform, or SPM begins	Within 24 hours, from the date construction begins, that the lights and sound signals are in use at the construction site.
(c) A light or sound signal is changed during construction	Within 24 hours of the change.
(d) Lights or sound signals used during construction of a platform, buoy, or SPM are replaced by permanent fixtures to meet the requirements of this part.	Within 24 hours of replacement.
(e) The first cargo transfer operation begins	At least 60 days before the operation.

§ 149.615 What construction drawings and specifications are required?

(a) To show compliance with the Act and this subchapter, the licensee must submit to the Commandant (CG–5P) or accepted Certifying Entity (CE) at least three copies of:

(1) Each construction drawing and specification; and

(2) Each revision to a drawing and specification.

(b) Each drawing, specification, and revision under paragraph (a) of this section must bear the seal, or a facsimile imprint of the seal, of the registered professional engineer responsible for the accuracy and adequacy of the material.

(c) Each drawing must identify the baseline design standard used as the basis for design.

[USCG–1998–3884, 71 FR 57651, Sept. 29, 2006, as amended by USCG–2013–0397, 78 FR 39180, July 1, 2013]

§ 149.620 What happens when the Commandant (CG–5P) reviews and evaluates the construction drawings and specifications?

(a) The Commandant (CG–5P) may concurrently review and evaluate construction drawings and specifications with the Marine Safety Center and other Federal agencies having technical expertise, such as the Pipeline and Hazardous Materials Safety Administration and the Federal Energy

Regulatory Commission, in order to ensure compliance with the Act and this subchapter.

(b) Construction may not begin until the drawings and specifications are approved by the Commandant (CG–5P).

(c) Once construction begins, the Coast Guard periodically inspects the construction site to ensure that the construction complies with the drawings and specifications approved under paragraph (b) of this section.

(d) When construction is complete, the licensee must submit two complete sets of as-built drawings and specifications to the Commandant (CG–5P).

[USCG–1998–3884, 71 FR 57651, Sept. 29, 2006, as amended by USCG–2013–0397, 78 FR 39180, July 1, 2013]

§ 149.625 What are the design standards?

(a) Each component, except for those specifically addressed elsewhere in this subpart, must be designed to withstand at least the combined wind, wave, and current forces of the most severe storm that can be expected to occur at the deepwater port in any 100-year period. Component design must meet a recognized industry standard and be appropriate for the protection of human life from death or serious injury, both on the deepwater port and on vessels calling on or servicing the deepwater port, and for the protection of the environment.

(b) The applicant or licensee will be required to submit to the Commandant (CG–5P) a design basis for approval containing all proposed standards to be used in the fabrication and construction of deepwater port components.

(c) Heliports on floating deepwater ports must be designed in compliance with the regulations at 46 CFR part 108.

[USCG–1998–3884, 71 FR 57651, Sept. 29, 2006, as amended by USCG–2013–0397, 78 FR 39180, July 1, 2013]

STRUCTURAL FIRE PROTECTION

§ 149.640 What are the requirements for fire protection systems?

Manned deepwater ports built after January 1, 2004, and manned deepwater ports that undergo major conversions, must comply with the requirements for structural fire protection outlined in this part.

[USCG–1998–3884, 71 FR 57651, Sept. 29, 2006, as amended by USCG–2013–0397, 78 FR 39180, July 1, 2013]

§ 149.641 What are the structural fire protection requirements for accommodation spaces and modules?

(a) Accommodation spaces and modules must be designed, located, and constructed so as to minimize the effects of flame, excess heat, or blast effects caused by fires and explosions; and to provide safe refuge from fires and explosions for personnel for the minimum time needed to evacuate the space.

(b) The requirement in paragraph (a) of this section may be met by complying with 46 CFR 108.131 through 108.147, provided that:

(1) The exterior boundaries of superstructures and deckhouses enclosing these spaces and modules, including any overhanging deck that supports these spaces and modules, are constructed to the A–60 standard defined in 46 CFR 108.131(b)(2) for any portion that faces and is within 100 feet of the hydrocarbon source; and

(2) The ventilation system has both a means of shutting down the system and an alarm at a manned location that sounds when any hazardous or toxic substance enters the system.

(c) As an alternative to paragraph (b) of this section, the requirement in paragraph (a) of this section may be met by complying with a national consensus standard, as that term is defined in 29 CFR 1910.2, for the structural fire protection of accommodation spaces and modules, and that complies with the standards set by a nationally recognized testing laboratory, as that term is defined by 29 CFR 1910.7, for such protection, provided that:

(1) All such spaces and modules on deepwater manned ports are provided with automatic fire detection and alarm systems. The alarm system must signal a normally manned area both visually and audibly, and be divided into zones to limit the area covered by a particular alarm signal;

(2) Sleeping quarters are fitted with smoke detectors that have local alarms

that may or may not be connected with the central alarm panel; and

(3) Independent fire walls are constructed and installed so as to be of size and orientation sufficient to protect the exterior surfaces of the spaces or modules from extreme radiant heat flux levels, and provide the A–60 standard defined in 46 CFR 108.131(b)(2).

[USCG–1998–3884, 71 FR 57651, Sept. 29, 2006, as amended by USCG–2013–0397, 78 FR 39180, July 1, 2013]

SINGLE POINT MOORINGS

§ 149.650 What are the requirements for single point moorings and their attached hoses?

Each single point mooring and its attached hose must be designed for the protection of the environment and for durability under combined wind, wave, and current forces of the most severe storm that can be expected to occur at the port in any 100-year period. The appropriateness of a design may be shown by its compliance with standards generally used within the offshore industry that are at least equivalent, in protecting the environment, to the standards in use on January 1, 2003, by any recognized classification society as defined in 46 CFR 8.100.

HELICOPTER FUELING FACILITIES

§ 149.655 What are the requirements for helicopter fueling facilities?

Helicopter fueling facilities must comply with 46 CFR 108.489 or an equivalent standard.

EMERGENCY POWER

§ 149.660 What are the requirements for emergency power?

(a) Each pumping platform complex must have emergency power equipment including a power source, associated transforming equipment, and a switchboard to provide power to simultaneously operate all of the following for a continuous period of 18 hours:

(1) Emergency lighting circuits;

(2) Aids to navigation equipment;

(3) Communications equipment;

(4) Radar equipment;

(5) Alarm systems;

(6) Electrically operated fire pumps; and

(7) Other electrical equipment identified as emergency equipment in the operations manual for the deepwater port.

(b) The equipment required by paragraph (a) of this section must:

(1) All be located in the same space; and

(2) Contain only machinery and equipment for the supply of emergency power (*i.e.*, no oil or natural gas transfer pumping equipment) in accordance with 46 CFR 112.05.

[USCG–1998–3884, 71 FR 57651, Sept. 29, 2006, as amended by USCG–2013–0397, 78 FR 39180, July 1, 2013]

GENERAL ALARM SYSTEM

§ 149.665 What are the requirements for a general alarm system?

Each pumping platform complex must have a general alarm system that:

(a) Is capable of being manually activated by using alarm boxes;

(b) Is audible in all parts of the pumping platform complex, except in areas of high ambient noise levels where hearing protection is required under § 150.613 of this chapter; and

(c) Has a high intensity flashing light in areas where hearing protection is used.

§ 149.670 What are the requirements for marking a general alarm system?

Each of the following must be marked with the words ''General Alarm'' in yellow letters at least 1 inch high on a red background:

(a) Each general alarm box; and

(b) Each audio or visual device described under § 149.665 of this part for signaling the general alarm.

[USCG–1998–3884, 71 FR 57651, Sept. 29, 2006, as amended by USCG–2013–0397, 78 FR 39180, July 1, 2013]

PUBLIC ADDRESS SYSTEM

§ 149.675 What are the requirements for the public address system?

(a) For a manned deepwater port, each pumping platform complex must have a public address system operable from two locations on the complex.

(b) For an unmanned deepwater port, the vessel master must provide a working public address system on a vessel while it is moored or otherwise connected to the deepwater port.

[USCG–1998–3884, 71 FR 57651, Sept. 29, 2006, as amended by USCG–2013–0397, 78 FR 39180, July 1, 2013]

MEDICAL TREATMENT ROOMS

§ 149.680 What are the requirements for medical treatment rooms?

Each deepwater port with sleeping spaces for 12 or more persons, including persons in accommodation modules, must have a medical treatment room that has—

(a) A sign at the entrance designating it as a medical treatment room;

(b) An entrance that is wide enough and arranged to readily admit a person on a stretcher;

(c) A single berth or examination table that is accessible from both sides; and

(d) A washbasin located in the room.

[USCG–1998–3884, 71 FR 57651, Sept. 29, 2006, as amended by USCG–2013–0397, 78 FR 39180, July 1, 2013]

§ 149.685 May a medical treatment room be used for other purposes?

A medical treatment room may be used as a sleeping space if the room meets the requirements of this subpart for both medical treatment rooms and sleeping spaces. It may also be used as an office. However, when used for medical purposes, the room may not be used as a sleeping space or office.

MISCELLANEOUS

§ 149.690 What are the requirements for means of escape, personnel landings, guardrails, similar devices, and for noise limits?

Each deepwater port must comply with the requirements for means of escape, personnel landings, guardrails and similar devices, and noise limits as outlined in §§ 149.691 through 149.699 of this part.

[USCG–1998–3884, 71 FR 57651, Sept. 29, 2006, as amended by USCG–2013–0397, 78 FR 39180, July 1, 2013]

MEANS OF ESCAPE

§ 149.691 What means of escape are required?

(a) Each deepwater port must have both primary and secondary means of escape. Each of these means must either:

(1) Comply with 46 CFR 108.151; or

(2) Be designed and installed in compliance with a national consensus standard, as that term is defined in 29 CFR 1910.2, for use in evacuating the deepwater port.

(b) A primary means of escape consists of a fixed stairway or a fixed ladder, constructed of steel.

(c) A secondary means of escape consists of either:

(1) A fixed stairway or a fixed ladder, constructed of steel; or

(2) A marine evacuation system, a portable flexible ladder, a knotted manrope, or a similar device determined by the Sector Commander, or MSU Commander with COTP and OCMI authority to provide an equivalent or better means of escape.

[USCG–1998–3884, 71 FR 57651, Sept. 29, 2006, as amended by USCG–2013–0397, 78 FR 39180, July 1, 2013]

§ 149.692 Where must they be located?

(a) Each means of escape must be easily accessible to personnel for rapidly evacuating the deepwater port.

(b) When two or more means of escape are installed, at least two must be located as nearly diagonally opposite each other as practicable.

(c) When the floor area of any of the following spaces contains 300 square feet or more, the space must have at least two exits as widely separated from each other as possible:

(1) Each accommodation space; and

(2) Each space that is used on a regular basis, such as a control room, machinery room, storeroom, or other space where personnel could be trapped in an emergency.

(d) On a manned deepwater port, each structural appendage that is not occupied continuously, and that does not contain living quarters, workshops, offices, or other manned spaces must have at least one primary means of escape. The Sector Commander, or MSU

Commander with COTP and OCMI authority may also determine that one or more secondary means of escape is required.

(e) When personnel are on an unmanned deepwater port, the deepwater port must have, in addition to the one primary means of escape, either:

(1) Another primary means of escape; or

(2) One or more secondary means of escape in any work space that may be temporarily occupied by 10 persons or more.

(f) Structural appendages to an unmanned deepwater port do not require a primary or a secondary means of escape, unless the Sector Commander, or MSU Commander with COTP and OCMI authority determines that one or more are necessary.

(g) Each means of escape must extend from the deepwater port's uppermost working level to each successively lower working level, and so on to the water surface.

[USCG–1998–3884, 71 FR 57651, Sept. 29, 2006, as amended by USCG–2013–0397, 78 FR 39180, July 1, 2013]

PERSONNEL LANDINGS

§ 149.693 What are the requirements for personnel landings on manned deepwater ports?

(a) On manned deepwater ports, sufficient personnel landings must be provided to assure safe access and egress.

(b) The personnel landings must be provided with satisfactory illumination. The minimum is 1 foot candle of artificial illumination as measured at the landing floor and guards and rails.

GUARDRAILS AND SIMILAR DEVICES

§ 149.694 What are the requirements for catwalks, floors, and openings?

(a) The configuration and installation of catwalks, floors, and openings must comply with § 143.110 of this chapter.

(b) This section does not apply to catwalks, floors, deck areas, or openings in areas not normally occupied by personnel or on helicopter landing decks.

§ 149.695 What are the requirements for stairways?

Stairways must have at least two courses of rails. The top course must serve as a handrail and be at least 34 inches above the tread.

§ 149.696 What are the requirements for a helicopter landing deck safety net?

A helicopter landing deck safety net must comply with 46 CFR 108.235.

NOISE LIMITS

§ 149.697 What are the requirements for a noise level survey?

(a) A survey to determine the maximum noise level during normal operations must be conducted in each accommodation space, working space, or other space routinely used by personnel. The recognized methodology used to conduct the survey must be specified in the survey results. Survey results must be kept on the deepwater port or, for an unmanned deepwater port, in the owner's principal office.

(b) The noise level must be measured over 12 hours to derive a time weighted average (TWA) using a sound level meter and an A-weighted filter or equivalent device.

(c) If the noise level throughout a space is determined to exceed 85 db(A), based on the measurement criteria in paragraph (b) of this section, then signs must be posted with the legend: ''Noise Hazard—Hearing Protectors Required.'' Signs must be posted at eye level at each entrance to the space.

(d) If the noise level exceeds 85 db(A) only in a portion of a space, then the sign described in paragraph (c) of this section must be posted within that portion where visible from each direction of access.

(e) Working spaces and other areas routinely used by personnel, other than accommodation spaces, must be designed to limit the noise level in those areas so that personnel wearing hearing protectors may hear warning and emergency alarms. If this is not practicable and warning and emergency alarms cannot be heard, visual alarms in addition to the audible alarms must be installed.

PORTABLE LIGHTS

§ 149.700 What kind of portable lights may be used on a deepwater port?

Each portable light and its supply cord on a deepwater port must be designed for the environment where it is used.

PART 150—DEEPWATER PORTS: OPERATIONS

Subpart A—General

Sec.
150.1 What does this part do?
150.5 Definitions.
150.10 What are the general requirements for operations manuals?
150.15 What must the operations manual include?
150.20 How many copies of the operations manual must be given to the Coast Guard?
150.25 Amending the operations manual.
150.30 Proposing an amendment to the operations manual.
150.35 How may an adjacent coastal state request an amendment to the deepwater port operations manual?
150.40 Deviating from the operations manual.
150.45 Emergency deviation from this subchapter or the operations manual.
150.50 What are the requirements for a facility spill response plan?

Subpart B—Inspections

150.100 What are the requirements for inspecting deepwater ports?
150.105 What are the requirements for annual self-inspection?
150.110 What are the notification requirements upon receipt of classification society certifications?

Subpart C—Personnel

150.200 Who must ensure that deepwater port personnel are qualified?
150.205 What are the language requirements for deepwater port personnel?
150.210 What are the restrictions on serving in more than one position?
150.225 What training and instruction are required?

Subpart D—Vessel Navigation

150.300 What does this subpart do?
150.305 How does this subpart apply to unmanned deepwater ports?
150.310 When is radar surveillance required?
150.320 What advisories are given to tankers?
150.325 What is the first notice required before a tanker enters the safety zone or area to be avoided?
150.330 What is the second notice required before a tanker enters the safety zone or area to be avoided?
150.340 What are the rules of navigation for tankers in the safety zone or area to be avoided?
150.345 How are support vessels cleared to move within the safety zone or area to be avoided?
150.350 What are the rules of navigation for support vessels in the safety zone or area to be avoided?
150.355 How are other vessels cleared to move within the safety zone?
150.380 Under what circumstances may vessels operate within the safety zone or area to be avoided?
150.385 What is required in an emergency?

Subpart E—Cargo Transfer Operations

150.400 What does this subpart do?
150.405 How must a cargo transfer system be tested and inspected?
150.420 What actions must be taken when cargo transfer equipment is defective?
150.425 What are the requirements for transferring cargo?
150.430 What are the requirements for a declaration of inspection?
150.435 When are cargo transfers not allowed?
150.440 How may the Sector Commander, or MSU Commander, with COTP and OCMI authority order suspension of cargo transfers?
150.445 When is oil in a single point mooring-oil transfer system (SPM-OTS) displaced with water?

Subpart F—Emergency and Specialty Equipment

150.500 What does this subpart do?

MAINTENANCE AND REPAIR

150.501 How must emergency equipment be maintained and repaired?

LIFESAVING EQUIPMENT (GENERAL)

150.502 What are the maintenance and repair requirements for lifesaving equipment?

LAUNCHING APPLIANCES

150.503 What are the time interval requirements for maintenance on survival craft falls?
150.504 When must the operator service and examine lifeboat and rescue boat launching appliances?
150.505 When must the operator service and examine lifeboat and rescue boat release gear?

INFLATABLE LIFESAVING APPLIANCES

150.506 When must the operator service inflatable lifesaving appliances and marine evacuation systems?
150.507 How must the operator service inflatable lifesaving appliances?
150.508 What are the maintenance and repair requirements for inflatable rescue boats?

OPERATIONAL TESTS AND INSPECTIONS (GENERAL)

150.509 How must emergency equipment be tested and inspected?
150.510 How must tested emergency equipment be operated?
150.511 What are the operational testing requirements for lifeboat and rescue boat release gear?

FREQUENCY OF TESTS AND INSPECTIONS

150.512 What occurs during the weekly tests and inspections?
150.513 What occurs during the monthly tests and inspections?
150.514 What are the annual tests and inspections?

WEIGHT TESTING

150.515 What are the requirements for weight testing of newly installed or relocated craft?
150.516 What are the periodic requirements for weight testing?
150.517 How are weight tests supervised?

PERSONAL SAFETY GEAR

150.518 What are the inspection requirements for work vests and immersion suits?

EMERGENCY LIGHTING AND POWER SYSTEMS

150.519 What are the requirements for emergency lighting and power systems?

FIRE EXTINGUISHING EQUIPMENT

150.520 When must fire extinguishing equipment be tested and inspected?
150.521 What records are required?

MISCELLANEOUS OPERATIONS

150.530 What may the fire main system be used for?
150.531 How many fire pumps must be kept ready for use at all times?
150.532 What are the requirements for connection and stowage of fire hoses?
150.540 What are the restrictions on fueling aircraft?
150.550 What are the requirements for the muster list?
150.555 How must cranes be maintained?

Subpart G—Workplace Safety and Health

150.600 What does this subpart do?

SAFETY AND HEALTH (GENERAL)

150.601 What are the safety and health requirements for the workplace on a deepwater port?
150.602 What occupational awareness training is required?
150.603 What emergency response training is required?
150.604 Who controls access to medical monitoring and exposure records?
150.605 What are the procedures for reporting a possible workplace safety or health violation at a deepwater port?
150.606 After learning of a possible violation, what does the Sector Commander, or the MSU Commander, with COTP and OCMI authority do?

GENERAL WORKPLACE CONDITIONS

150.607 What are the general safe working requirements?

PERSONAL PROTECTIVE EQUIPMENT

150.608 Who is responsible for ensuring that the personnel use or wear protective equipment and are trained in its use?

EYES AND FACE

150.609 When is eye and face protection required?
150.610 Where must eyewash equipment be located?

HEAD

150.611 What head protection is required?

FEET

150.612 What footwear is required?

NOISE AND HEARING PROTECTION

150.613 What are the requirements for a noise monitoring and hearing protection survey?

CLOTHING

150.614 When is protective clothing required?

ELECTRICAL

150.615 What safe practices are required?

LOCKOUT/TAGOUT

150.616 What are the requirements for lockout?
150.617 What are the requirements for tagout?

RESPIRATORY PROTECTION

150.618 What are the requirements for respiratory protection?

FALL ARREST

150.619 What are the fall arrest system requirements?

MACHINE GUARDS

150.620 What are the requirements for protecting personnel from machinery?

SLINGS

150.621 What are the requirements for slings?

WARNING SIGNS

150.622 What are the warning sign requirements?

CONFINED SPACE SAFETY

150.623 What are the requirements for protecting personnel from hazards associated with confined spaces?

BLOOD-BORNE PATHOGENS

150.624 What are the requirements for protecting personnel from blood-borne pathogens?

HAZARD COMMUNICATION PROGRAM

150.625 What must the hazard communication program contain?
150.626 What is the hazard communication program used for?
150.627 Must material safety data sheets be available to all personnel?
150.628 How must the operator label, tag, and mark a container of hazardous material?

Subpart H—Aids to Navigation

150.700 What does this subpart do?
150.705 What are the requirements for maintaining and inspecting aids to navigation?
150.710 What are the requirements for supplying power to aids to navigation?
150.715 What are the requirements for lights used as aids to navigation?
150.720 What are the requirements for sound signals?

Subpart I—Reports and Records

150.800 What does this subpart do?

REPORTS

150.805 What reports must be sent both to a classification society and to the Coast Guard?
150.810 Reporting a problem with an aid to navigation.
150.812 What is the purpose of reporting casualties on deepwater ports?
150.815 How must casualties be reported?
150.820 When must a written report of casualty be submitted, and what must it contain?
150.825 Reporting a diving-related casualty.
150.830 Reporting a pollution incident.
150.835 Reporting sabotage or subversive activity.

RECORDS

150.840 What records must be kept?
150.845 Personnel records.
150.850 How long must a declaration of inspection form be kept?

Subpart J—Safety Zones, No Anchoring Areas, and Areas to Be Avoided

150.900 What does this subpart do?
150.905 Why are safety zones, no anchoring areas, and areas to be avoided established?
150.910 What installations, structures, or activities are prohibited in a safety zone?
150.915 How are safety zones, no anchoring areas, and areas to be avoided established and modified?
150.920 How can I find notice of new or proposed safety zones?
150.925 How long may a safety zone, no anchoring area, or area to be avoided remain in place?
150.930 What datum is used for the geographic coordinates in this subpart?
150.940 Safety zones for specific deepwater ports.

AUTHORITY: 33 U.S.C. 1231, 1321(j)(1)(C), (j)(5), (j)(6), (m)(2); 33 U.S.C. 1509(a); E.O. 12777, sec. 2; E.O. 13286, sec. 34, 68 FR 10619; Department of Homeland Security Delegation No. 0170.1(70), (73), (75), (80).

SOURCE: USCG–1998–3884, 71 FR 57651, Sept. 29, 2006, unless otherwise noted.

EDITORIAL NOTE: Nomenclature changes to part 150 appear by USCG–2010–0351, 75 FR 36284, June 25, 2010.

Subpart A—General

§ 150.1 What does this part do?

This part provides requirements for the operation of deepwater ports.

§ 150.5 Definitions.

See § 148.5 of this chapter for the definition of certain terms used in this part.

§ 150.10 What are the general requirements for operations manuals?

(a) Each deepwater port must have an operations manual that addresses policies and procedures for normal and emergency operations conducted at the

deepwater port. The operations manual must, at a minimum, include the requirements outlined in § 150.15 of this part.

(b) The operations manual is reviewed and approved by the Commandant (CG–5P), who may consult with the local Sector Commander, or MSU Commander, with COTP and OCMI authority, as meeting the requirements of the Act and this subchapter. The original manual is approved as part of the application process in part 148 of this chapter.

(c) The Sector Commander, or MSU Commander, with COTP and OCMI authority may approve subsequent changes to the operations manual, provided the Commandant (CG–5P) is notified and consulted regarding any significant modifications.

(d) The manual must be readily available on the deepwater port for use by personnel.

(e) The licensee must ensure that all personnel are trained and follow the procedures in the manual while at the deepwater port.

[USCG–1998–3884, 71 FR 57651, Sept. 29, 2006, as amended by USCG–2013–0397, 78 FR 39180, July 1, 2013]

§ 150.15 What must the operations manual include?

The operations manual required by § 150.10 of this part must identify the deepwater port and include the information required in this section.

(a) *General information.* A description of the geographic location of the deepwater port.

(b) A physical description of the deepwater port.

(c) Engineering and construction information, including all defined codes and standards used for the deepwater port structure and systems. The operator must include schematics of all applicable systems. Schematics must show the location of valves, gauges, system working pressure, relief settings, monitoring systems, and other pertinent information.

(d) *Communications system.* A description of a comprehensive communications plan, including:

(1) Dedicated frequencies;

(2) Communication alerts and notices between the deepwater port and arriving and departing vessels; and

(3) Mandatory time intervals or communication schedules for maintaining a live radio watch, and monitoring frequencies for communication with vessels and aircraft.

(e) *Facility plan.* A layout plan for the mooring areas, navigation aids, cargo transfer locations, and control stations.

(f) The hours of operation.

(g) The size, type, number, and simultaneous operations of tankers that the deepwater port can handle.

(h) Calculations, with supporting data or other documentation, to show that the charted water depth at each proposed mooring location is sufficient to provide at least a net under keel clearance of 5 feet, at the mean low water condition.

(i) *Tanker navigation procedures.* The procedures for tanker navigation, including the information required in paragraphs (i)(1) through (i)(9) of this section.

(1) The operating limits, maneuvering capability, draft, net under keel clearance, tonnage, length, and breadth of the tanker that will be accommodated at each designated mooring.

(2) The speed limits proposed for tankers in the safety zone and area to be avoided around the deepwater port.

(3) Any special navigation or communication equipment that may be required for operating in the safety zone and area to be avoided.

(4) The measures for routing vessels, including a description of the radar navigation system to be used in operation of the deepwater port:

(i) Type of radar;

(ii) Characteristics of the radar;

(iii) Antenna location;

(iv) Procedures for surveillance of vessels approaching, departing, navigating, and transiting the safety zone and area to be avoided;

(v) Advisories to each tanker underway in the safety zone regarding the vessel's position, deepwater port conditions, and status of adjacent vessel traffic;

(vi) Notices that must be made, as outlined in § 150.325 of this part, by the

tanker master regarding the vessel's characteristics and status; and

(vii) Rules for navigating, mooring, and anchoring in a safety zone, area to be avoided, and anchorage area.

(5) Any mooring equipment needed to make up to the single point mooring (SPM).

(6) The procedures for clearing tankers, support vessels, and other vessels and aircraft during emergency and routine conditions.

(7) Weather limits for tankers, including a detailed description of how to forecast the wind, wave, and current conditions for:

(i) Shutdown of cargo transfer operations;

(ii) Departure of the tanker from the mooring;

(iii) Prohibition on mooring at the deepwater port or SPM; and

(iv) Shutdown of all deepwater port operations and evacuation of the deepwater port.

(8) Any special illumination requirements for vessel arrival, discharge, and departure operations.

(9) Any special watchstanding requirements for vessel transiting, mooring, or anchoring.

(j) *Personnel.* The duties, title, qualifications, and training of all deepwater port personnel responsible for managing and carrying out the following deepwater port activities and functions:

(1) Vessel traffic management;

(2) Cargo transfer operations;

(3) Safety and fire protection;

(4) Maintenance and repair operations;

(5) Emergency procedures; and

(6) Deepwater port security.

(k) The personnel assigned to supervisory positions must be designated, in writing, by the licensee and have the appropriate experience and training to satisfactorily perform their duties. The Commandant (CG–5P) will review and approve the qualifications for all proposed supervisory positions.

(l) *Cargo transfer procedures.* The procedures for cargo transfer must comply with the applicable requirements of parts 154 and 156 for oil, and subpart B (Operations) to part 127 for natural gas, respectively, of this chapter, including the requirements specified in paragraphs (l)(1) through (l)(10) of this section.

(1) The requirements for oil transfers in accordance with subpart A to part 156 of this chapter regarding:

(i) Pre-transfer conference;

(ii) Inspection of transfer site and equipment such as hoses, connectors, closure devices, monitoring devices, and containment;

(iii) Connecting and disconnecting transfer equipment, including a floating hose string for a single point mooring (SPM);

(iv) Preparation of the Declaration of Inspection; and

(v) Supervision by a person in charge.

(2) The requirements for natural gas transfers in accordance with subpart B to part 127 of this chapter regarding:

(i) Pre-transfer conference;

(ii) Inspection of transfer site and equipment such as hoses, connectors, closure devices, leak monitoring devices, and containment;

(iii) Connecting and disconnecting of transfer equipment, including to a floating hose string for a SPM;

(iv) Line purging to test for leaks and to prepare for cool-down or heat-up phases as appropriate;

(v) Preparation of the Declaration of Inspection; and

(vi) Supervision by a deepwater port person in charge.

(3) The shipping name of, and Material Safety Data Sheet on, any product transferred.

(4) The duties, title, qualifications, and training of personnel of the deepwater port designated as the person in charge and responsible for managing cargo transfers, including ballasting operations if applicable to the deepwater port, in accordance with subpart D of part 154 for oil, and subpart B (Operations) of part 127 for natural gas, respectively, of this chapter.

(5) Minimum requirements for watch personnel on board the vessel during transfer operations, such as personnel necessary for checking mooring gear, monitoring communications, and maintaining propulsion and steering on standby.

(6) The start up and completion of pumping.

(7) Emergency shutdown.

(8) The maximum relief valve settings, the maximum available working pressure, and hydraulic shock to the system without relief valves, or both.

(9) Equipment necessary to discharge cargo to the port complex without harm to the environment or to persons involved in the cargo transfer, including piping, adapters, bolted flanges, and quick-disconnect coupling.

(10) A description of the method used to water and de-water the single point mooring hoses when required.

(m) Unusual arrangements that may be applicable, including:

(1) A list and description of any extraordinary equipment or assistance available to vessels with inadequate pumping capacity, small cargoes, small diameter piping, or inadequate crane capacity; and

(2) A description of special storage or delivery arrangements for unusual cargoes; for example, cool-down requirements for transfer system components prior to transfer of liquefied natural gas.

(n) *Maintenance procedures*. A maintenance program to document service and repair of key equipment such as:

(1) Cargo transfer equipment;

(2) Firefighting and fire protection equipment;

(3) Facility support services, such as generators, evaporators, etc.;

(4) Safety equipment; and

(5) Cranes.

(o) A waste management plan comparable to § 151.57 of this chapter.

(p) *Occupational health and safety training procedures*. Policy and procedures to address occupational health and safety requirements outlined in §§ 150.600 to 150.632 of this part, including:

(1) Employee training in safety and hazard awareness, and proper use of personnel protective equipment;

(2) Physical safety measures in the workplace, such as housekeeping and illumination of walking and working areas;

(3) Fall arrest;

(4) Personnel transfer nets;

(5) Hazard communication (right-to-know);

(6) Permissible exposure limits;

(7) Machine guarding;

(8) Electrical safety;

(9) Lockout/tagout;

(10) Crane safety;

(11) Sling usage;

(12) Hearing conservation;

(13) Hot work;

(14) Warning signs;

(15) Confined space safety; and

(16) Initial and periodic training and certification to be documented for each deepwater port employee and for visitors, where appropriate; for example, safety orientation training.

(q) *Emergency notification procedures*. Emergency internal and external notification procedures:

(1) Names and numbers of key deepwater port personnel;

(2) Names and numbers of law enforcement and response agencies;

(3) Names and numbers of persons in charge of any Outer Continental Shelf facility that, due to close proximity, could be affected by an incident at the deepwater port.

(r) Quantity, type, location, and use of safety and fire protection equipment, including the fire plan.

(s) Aerial operations such as helicopter landing pad procedures.

(t) Deepwater port response procedures for:

(1) Fire;

(2) Reportable product spill;

(3) Personnel injury, including confined space rescue; and

(4) Terrorist activity, as described in the deepwater port security plan.

(u) Emergency evacuation procedures comparable to § 146.140(d) of this chapter.

(v) Designation of and assignment of deepwater port personnel to response teams for specific contingencies.

(w) Individual and team training for incident response, in accordance with 46 CFR 109.213, to cover:

(1) Care and use of equipment;

(2) Emergency drills and response, to include:

(i) Type;

(ii) Frequency, which must be at least annually; and

(iii) Documentation, including records, reports and dissemination of ''lessons learned''.

(3) Documentation of the following minimum training requirements for response team members:

(i) Marine firefighting training;

(ii) First aid/CPR;

(iii) Water survival;

(iv) Spill response and clean up;

(v) Identification of at least one employee trained and certified at the basic level as an emergency medical technician; and

(vi) Identification of at least two employees trained and certified as offshore competent persons in prevention of inadvertent entry into hazardous confined spaces.

(x) *Security procedures*. Deepwater port operators must develop a deepwater port security plan comparable to those required by 33 CFR part 106. The plan must address at least:

(1) Access controls for goods and materials and access controls for personnel that require positive and verifiable identification;

(2) Monitoring and alerting of vessels that approach or enter the deepwater port's security zone;

(3) Risk identification and procedures for detecting and deterring terrorist or subversive activity, such as security lighting and remotely-alarmed restricted areas;

(4) Internal and external notification and response requirements in the event of a perceived threat or an attack on the deepwater port;

(5) Designation of the deepwater port security officer;

(6) Required security training and drills for all personnel; and

(7) The scalability of actions and procedures for the various levels of threat.

(y) *Special operations procedures*. Include procedures for any special operations, such as:

(1) Evacuation and re-manning;

(2) Refueling;

(3) Diving;

(4) Support vessel operations;

(5) Providing logistical services; and

(6) Contingency response for events that could affect nearby existing Outer Continental Shelf oil and gas facilities, such as explosions, fires, or product spills.

(z) Recordkeeping of maintenance procedures, tests, and emergency drills outlined elsewhere in the operations manual.

(aa) *Environmental procedures*. A program for maintaining compliance with license conditions and applicable environmental laws, by periodic monitoring of the environmental effects of the port and its operations, including:

(1) Air and water monitoring in accordance with applicable Federal and State law;

(2) A routine re-examination, not less than once every 5 years, of the physical, chemical, and biological factors contained in the deepwater port's environmental impact analysis and baseline study submitted with the license application; and

(3) A risk management plan, addressing the potential for an uncontrolled release; or provision for more detailed studies following any uncontrolled release or other unusual event that adversely affects the environment.

[USCG–1998–3884, 71 FR 57651, Sept. 29, 2006, as amended by USCG–2013–0397, 78 FR 39180, July 1, 2013]

§ 150.20 How many copies of the operations manual must be given to the Coast Guard?

The draft operations manual must be included with the application, and the number of copies is governed by § 148.115 of this chapter. At least five copies of the final operations manual, and of any subsequent amendment, must be submitted to the Commandant (CG–5P). Additional copies may be required to meet the needs of other agencies.

[USCG–1998–3884, 71 FR 57651, Sept. 29, 2006, as amended by USCG–2013–0397, 78 FR 39181, July 1, 2013]

§ 150.25 Amending the operations manual.

(a) Whenever the cognizant Sector Commander, or MSU Commander, with COTP and OCMI authority finds that the operations manual does not meet the requirements of this part, the COTP notifies the licensee, in writing, of the inadequacies in the manual.

(b) Within 45 days after the notice under paragraph (a) of this section is sent, the licensee must submit written proposed amendments to eliminate the inadequacies.

(c) The cognizant Sector Commander, or MSU Commander, with COTP and OCMI authority reviews the amendments and makes a determination as to the adequacy of the amendments and

notifies the licensee of the determination.

(d) If the Sector Commander, or MSU Commander, with COTP and OCMI authority decides that an amendment is necessary, the amendment goes into effect 60 days after the Sector Commander, or MSU Commander, with COTP and OCMI authority notifies the licensee of the amendment.

(e) The licensee may petition the Commandant (CG–5P), via the appropriate district office, to review the decision of the Sector Commander, or MSU Commander, with COTP and OCMI authority. In this case, the effective date of the amendment is delayed pending the Commandant's decision. Petitions must be made in writing and presented to the Sector Commander, or MSU Commander, with COTP and OCMI authority to forward to the Commandant (CG–5P).

(f) If the Sector Commander, or MSU Commander, with COTP and OCMI authority finds that a particular situation requires immediate action to prevent a spill or discharge, or to protect the safety of life and property, the he or she may issue an amendment effective on the date that the licensee receives it. The Sector Commander, or MSU Commander, with COTP and OCMI authority must include a brief statement of the reasons for the immediate amendment. The licensee may petition the District Commander for review, but the petition does not delay the effective date of the amendment.

[USCG–1998–3884, 71 FR 57651, Sept. 29, 2006, as amended by USCG–2013–0397, 78 FR 39181, July 1, 2013]

§ 150.30 Proposing an amendment to the operations manual.

(a) The licensee may propose an amendment to the operations manual:

(1) By submitting to the Sector Commander, or to the MSU Commander, with COTP and OCMI authority, in writing, the amendment and reasons for the amendments not less than 30 days before the requested effective date of the amendment; or

(2) If the amendment is needed immediately, by submitting the amendment, and reasons why the amendment is needed immediately, to the Sector Commander, or MSU Commander, with COTP and OCMI authority in writing.

(b) The Sector Commander, or MSU Commander, with COTP and OCMI authority must respond to a proposed amendment by notifying the licensee, in writing, before the requested date of the amendment whether the request is approved. If the request is disapproved, the Sector Commander, or MSU Commander, with COTP and OCMI authority must include the reasons for disapproval in the notice. If the request is for an immediate amendment, the Sector Commander, or MSU Commander, with COTP and OCMI authority must respond as soon as possible.

[USCG–1998–3884, 71 FR 57651, Sept. 29, 2006, as amended by USCG–2013–0397, 78 FR 39181, July 1, 2013]

§ 150.35 How may an Adjacent Coastal State request an amendment to the deepwater port operations manual?

(a) An Adjacent Coastal State connected by pipeline to the deepwater port may petition the cognizant Sector Commander, or MSU Commander, with COTP and OCMI authority to amend the operations manual. The petition must include sufficient information to allow the Sector Commander, or MSU Commander, with COTP and OCMI authority to reach a decision concerning the proposed amendment.

(b) After the Sector Commander, or MSU Commander, with COTP and OCMI authority receives a petition, the Sector Commander, or MSU Commander, with COTP and OCMI authority requests comments from the licensee.

(c) After reviewing the petition and comments, and considering the costs and benefits involved, the Sector Commander, or MSU Commander, with COTP and OCMI authority may approve the petition if the proposed amendment will provide equivalent or improved protection and safety. The Adjacent Coastal State may petition the Commandant (CG–5P) to review the decision. Petitions must be made in writing and presented to the Sector Commander, or MSU Commander, with COTP and OCMI authority for forwarding to the Commandant (CG–5P) via the District Commander.

[USCG–2013–0397, 78 FR 39181, July 1, 2013]

§ 150.40 Deviating from the operations manual.

If, because of a particular situation, the licensee needs to deviate from the operations manual, the licensee must submit a written request to the Captain of the Port (COTP) explaining why the deviation is necessary and what alternative is proposed. If the COTP determines that the deviation would ensure equivalent or greater protection and safety, the COTP authorizes the deviation and notifies the licensee in writing.

§ 150.45 Emergency deviation from this subchapter or the operations manual.

In an emergency, any person may deviate from any requirement in this subchapter, or any procedure in the operations manual, to ensure the safety of life, property, or the environment. Each deviation must be reported to the Sector Commander, or MSU Commander, with COTP and OCMI authority, at the earliest possible time.

[USCG–1998–3884, 71 FR 57651, Sept. 29, 2006, as amended by USCG–2013–0397, 78 FR 39181, July 1, 2013]

§ 150.50 What are the requirements for a facility spill response plan?

(a) Each deepwater port which meets the applicability requirements of part 154 subpart F of this chapter must have a facility response plan that is approved by the Sector Commander, or MSU Commander, with COTP and OCMI authority.

(b) Each natural gas deepwater port must have a natural gas facility emergency plan that meets part 127, subpart B of this chapter.

(c) The response plan must be submitted to the Sector Commander, or MSU Commander, with COTP and OCMI authority, in writing, not less than 60 days before the deepwater port begins operation.

[USCG–1998–3884, 71 FR 57651, Sept. 29, 2006, as amended by USCG–2013–0397, 78 FR 39181, July 1, 2013]

Subpart B—Inspections

§ 150.100 What are the requirements for inspecting deepwater ports?

Under the direction of the Sector Commander, or to the MSU Commander, with COTP and OCMI authority, marine inspectors may inspect deepwater ports to determine whether the requirements of this subchapter are met. A marine inspector may conduct an inspection, with or without advance notice, at any time the Sector Commander or MSU Commander deems necessary.

[USCG–1998–3884, 71 FR 57651, Sept. 29, 2006, as amended by USCG–2013–0397, 78 FR 39182, July 1, 2013]

§ 150.105 What are the requirements for annual self-inspection?

(a) The owner or operator of each manned deepwater port must ensure that the deepwater port is regularly inspected to determine whether the facility is in compliance with the requirements of this subchapter. The inspection must be at intervals of no more than 12 months. The inspection may be conducted up to 2 months after its due date, but will be valid for only the 12 months following that due date.

(b) The owner or operator must record and submit the results of the annual self-inspection to the Sector Commander, or to the MSU Commander, with COTP and OCMI authority within 30 days of completing the inspection. The report must include a description of any failure, and the scope of repairs made to components or equipment, in accordance with the requirements in subpart I of this part, other than primary lifesaving, firefighting, or transfer equipment, which are inspected and repaired in accordance with subpart F.

(c) Prior to the initiation of a self-inspection plan, and before commencement of operations, the owner or operator must submit a proposal describing the self-inspection plan to the Sector Commander, or MSU Commander, with

COTP and OCMI authority for acceptance. The plan must address all applicable requirements outlined in parts 149 and 150 of this subchapter.

[USCG–1998–3884, 71 FR 57651, Sept. 29, 2006, as amended by USCG–2013–0397, 78 FR 39182, July 1, 2013]

§ 150.110 What are the notification requirements upon receipt of classification society certifications?

The licensee must notify the Sector Commander, or MSU Commander, with COTP and OCMI duties, in writing, upon receipt of a classification society certification, interim class certificate, or single point mooring classification certificate.

[USCG–1998–3884, 71 FR 57651, Sept. 29, 2006, as amended by USCG–2013–0397, 78 FR 39182, July 1, 2013]

Subpart C—Personnel

§ 150.200 Who must ensure that deepwater port personnel are qualified?

The licensee must ensure that the individual filling a position meets the qualifications for that position as outlined in the operations manual.

[USCG–1998–3884, 71 FR 57651, Sept. 29, 2006, as amended by USCG–2013–0397, 78 FR 39182, July 1, 2013]

§ 150.205 What are the language requirements for deepwater port personnel?

Only persons who read, write, and speak English may occupy the essential management positions outlined in the operations manual.

[USCG–1998–3884, 71 FR 57651, Sept. 29, 2006, as amended by USCG–2013–0397, 78 FR 39182, July 1, 2013]

§ 150.210 What are the restrictions on serving in more than one position?

No person may serve in more than one of the essential management positions outlined in the operations manual at any one time.

§ 150.225 What training and instruction are required?

Personnel must receive training and instruction commensurate with the position they hold. Procedures for documenting employee training must be outlined in the operations manual.

Subpart D—Vessel Navigation

§ 150.300 What does this subpart do?

This subpart supplements the International Regulations for Prevention of Collisions at Sea, 1972 (72 COLREGS) described in subchapter D of this chapter, and prescribes requirements that:

(a) Apply to the navigation of all vessels at or near a deepwater port; and

(b) Apply to all vessels while in a safety zone, area to be avoided, or no anchoring area.

§ 150.305 How does this subpart apply to unmanned deepwater ports?

The master of any tanker calling at an unmanned deepwater port is responsible for the safe navigation of the vessel to and from the deepwater port, and for the required notifications in § 150.325 of this part. Once the tanker is connected to the unmanned deepwater port, the master must maintain radar surveillance in compliance with the requirements of § 150.310 of this part.

[USCG–2013–0397, 78 FR 39182, July 1, 2013]

§ 150.310 When is radar surveillance required?

A manned deepwater port's person in charge of vessel operations must maintain radar surveillance of the safety zone or area to be avoided when:

(a) A tanker is proceeding to the safety zone after submitting the report required in § 150.325 in this part;

(b) A tanker or support vessel is underway in the safety zone or area to be avoided;

(c) A vessel other than a tanker or support vessel is about to enter or is underway in the safety zone or area to be avoided; or

(d) As described in the deepwater port security plan.

[USCG–1998–3884, 71 FR 57651, Sept. 29, 2006, as amended by USCG–2013–0397, 78 FR 39182, July 1, 2013]

§ 150.320 What advisories are given to tankers?

A manned deepwater port's person in charge of vessel operations must advise the master of each tanker underway in

the safety zone or area to be avoided of the following:

(a) At intervals not exceeding 10 minutes, the vessel's position by range and bearing from the pumping platform complex; and

(b) The position and the estimated course and speed, if moving, of all other vessels that may interfere with the movement of the tanker within the safety zone or area to be avoided.

§ 150.325 What is the first notice required before a tanker enters the safety zone or area to be avoided?

(a) The owner, master, agent, or person in charge of a tanker bound for a manned deepwater port must comply with the notice of arrival requirements in subpart C of part 160 of this chapter.

(b) The owner, master, agent, or person in charge of a tanker bound for a manned deepwater port must report the pertinent information required in § 150.15(i)(4)(vi) of this part for the vessel, including:

(1) The name, gross tonnage, and draft of the tanker;

(2) The type and amount of cargo in the tanker;

(3) The location of the tanker at the time of the report;

(4) Any conditions on the tanker that may impair its navigation, such as fire, or malfunctioning propulsion, steering, navigational, or radiotelephone equipment. The testing requirements in § 164.25 of this chapter are applicable to vessels arriving at a deepwater port;

(5) Any leaks, structural damage, or machinery malfunctions that may impair cargo transfer operations or cause a product discharge; and

(6) The operational condition of the equipment listed under § 164.35 of this chapter on the tanker.

(c) If the estimated time of arrival changes by more than 6 hours from the last reported time, the National Vessel Movement Center (NVMC) and the port's person in charge of vessel operations must be notified of the correction as soon as the change is known.

(d) If the information reported in paragraphs (b)(4) or (b)(5) of this section changes at any time before the tanker enters the safety zone or area to be avoided at the deepwater port, or while the tanker is in the safety zone or area to be avoided, the master of the tanker must report the changes to the NVMC and port's person in charge of vessel operations as soon as possible.

[USCG–1998–3884, 71 FR 57651, Sept. 29, 2006, as amended by USCG–2013–0397, 78 FR 39182, July 1, 2013]

§ 150.330 What is the second notice required before a tanker enters the safety zone or area to be avoided?

When a tanker bound for a manned deepwater port is 20 miles from entering the port's safety zone or area to be avoided, the master of the tanker must notify the port's person in charge of vessel operations of the tanker's name and location.

§ 150.340 What are the rules of navigation for tankers in the safety zone or area to be avoided?

(a) A tanker must enter or depart the port's safety zone or area to be avoided in accordance with the navigation procedures in the port's approved operations manual as described in § 150.15(i) of this part.

(b) A tanker must not anchor in the safety zone or area to be avoided, except in a designated anchorage area.

(c) A tanker may not enter a safety zone or area to be avoided in which another tanker is present, unless it has been cleared by the person in charge of the port and no other tankers are underway.

(d) A tanker must not operate, anchor, or moor in any area of the safety zone or area to be avoided in which the net under keel clearance would be less than 5 feet.

[USCG–1998–3884, 71 FR 57651, Sept. 29, 2006, as amended by USCG–2013–0397, 78 FR 39182, July 1, 2013]

§ 150.345 How are support vessels cleared to move within the safety zone or area to be avoided?

All movements of support vessels within a manned deepwater port's safety zone or area to be avoided must be cleared in advance by the port's person in charge of vessel operations.

§ 150.350 What are the rules of navigation for support vessels in the safety zone or area to be avoided?

A support vessel must not anchor in the safety zone or area to be avoided, except:

(a) In an anchorage area; or

(b) For vessel maintenance, which, in the case of a manned deepwater port, must be cleared by the port's person in charge of vessel operations.

§ 150.355 How are other vessels cleared to move within the safety zone?

(a) Clearance by a manned deepwater port's person in charge of vessel operations is required before a vessel, other than a tanker or support vessel, enters the safety zone.

(b) The port's person in charge of vessel operations may clear a vessel under paragraph (a) of this section only if its entry into the safety zone would not:

(1) Interfere with the purpose of the deepwater port;

(2) Endanger the safety of life, property, or environment; or

(3) Be prohibited by regulation.

(c) At an unmanned deepwater port, such as a submerged turret landing (STL) system, paragraphs (a) and (b) of this section apply once a tanker connects to the STL buoy.

§ 150.380 Under what circumstances may vessels operate within the safety zone or area to be avoided?

(a) Table 150.380(a) of this section lists both the areas within a safety zone where a vessel may operate and the clearance needed for that location.

TABLE 150.380(a)—REGULATED ACTIVITIES OF VESSELS AT DEEPWATER PORTS

Regulated activities	Safety zone	Areas to be avoided around each deepwater port component [1]	Anchorage areas	Other areas within and adjacent to the safety zone (e.g., no anchoring area)
Tankers calling at port	C	C	C	C
Support vessel movements	C	C	C	C
Transit by vessels other than tankers or support vessels.	F	D	P	P
Mooring to surface components (for example an SPM) by vessels other than tankers or support vessels.	N	N	N	N
Anchoring by vessels other than tankers or support vessels.	N	F	C	F
Fishing, including bottom trawl (shrimping)	N	D	P	N
Mobile drilling operations or erection of structures. [2]	N	R	N	N
Lightering/transshipment	N	N	N	N

[1] Areas to be avoided are in subpart J of this part.

[2] Not part of Port Installation.

Key to regulated activities for Table 150.380(a):

C—Movement of the vessel is permitted when cleared by the person in charge of vessel operations.

D—Movement is not restricted, but recommended transit speed not to exceed 10 knots. Communication with the person in charge of vessel operations.

F—Only in an emergency. Anchoring will be avoided in a no anchoring area except in the case of immediate danger to the ship or persons on board.

N—Not permitted.

P—Transit is permitted when the vessel is not in the immediate area of a tanker, and when cleared by the vessel traffic supervisor.

R—Permitted only if determined that operation does not create unacceptable risk to personnel safety and security and operation. For transiting foreign-flag vessels, the requirement for clearance to enter the area to be avoided and no anchoring area is advisory in nature, but mandatory for an anchorage area established within 12 nautical miles.

(b) If the activity is not listed in table 150.380(a) of this section, or otherwise provided for in this subpart, the Sector Commander's, or MSU Commander's, with COTP and OCMI authority permission is required before operating in the safety zone or regulated navigation area.

[USCG–1998–3884, 71 FR 57651, Sept. 29, 2006, as amended by USCG–2013–0397, 78 FR 39182, July 1, 2013]

§ 150.385 What is required in an emergency?

In an emergency, for the protection of life or property, a vessel may deviate from a vessel movement requirement in this subpart without clearance from a manned deepwater port's person in charge of vessel operations if the master advises the port person in charge of the reasons for the deviation at the earliest possible moment.

Subpart E—Cargo Transfer Operations

§ 150.400 What does this subpart do?

This subpart prescribes rules that apply to the transfer of oil or natural gas at a deepwater port.

§ 150.405 How must a cargo transfer system be tested and inspected?

(a) No person may transfer oil or natural gas through a cargo transfer system (CTS) at a deepwater port unless it has been inspected and tested according to this section.

(b) The single point mooring (SPM)–CTS must be maintained as required by the design standards used to comply with § 149.650 of this chapter.

(c) If the manufacturer's maximum pressure rating for any cargo transfer hose in a SPM–CTS has been exceeded, unless it was exceeded for testing required by this section, the hose must be:

(1) Removed;

(2) Hydrostatically tested to 1.5 times its maximum working pressure for oil, or 1.1 times its maximum working pressure for natural gas; and

(3) Visually examined externally and internally for evidence of:

(i) Leakage;

(ii) Loose covers;

(iii) Kinks;

(iv) Bulges;

(v) Soft spots; and

(vi) Gouges, cuts, or slashes that penetrate the hose reinforcement.

(d) Each submarine hose used in cargo transfer operations in an SPM–CTS must have been removed from its coupling, surfaced, and examined as described in paragraphs (c)(2) and (c)(3) of this section, within the preceding 2 years for oil, or 15 months for natural gas; and

(e) Before resuming cargo transfer operations, each submarine hose in an SPM–CTS must be visually examined in place as described in paragraph (c)(3) of this section after cargo transfer operations are shut down due to sea conditions at the deepwater port.

§ 150.420 What actions must be taken when cargo transfer equipment is defective?

When any piece of equipment involved in oil or natural gas transfer equipment is defective:

(a) The piece of equipment must be replaced or repaired before making any further cargo transfers; and

(b) The repaired or replaced piece must meet or exceed its original specifications. Repairs must be conducted in accordance with the port's maintenance program outlined in the operations manual, and that program must provide for the repair of natural gas transfer hoses in accordance with § 127.405 of this chapter.

§ 150.425 What are the requirements for transferring cargo?

Cargo transfer procedures must be outlined in the deepwater port operations manual and must provide:

(a) Oil transfer procedures that accord with § 156.120 of this chapter; and

(b) Natural gas transfer procedures that accord with §§ 127.315, 127.317 and 127.319 of this chapter.

[USCG–1998–3884, 71 FR 57651, Sept. 29, 2006, as amended by USCG–2013–0397, 78 FR 39182, July 1, 2013]

§ 150.430 What are the requirements for a declaration of inspection?

(a) No person may transfer cargo from a tanker to a manned deepwater port unless a declaration of inspection complying with § 156.150(c) for oil, or § 127.317 for natural gas, of this chapter has been filled out and signed by the vessel's officer in charge of cargo transfer and the person in charge (PIC) of cargo transfer for the deepwater port.

(b) Before signing a declaration of inspection, the vessel's officer in charge of cargo transfer must inspect the tanker, and the PIC of cargo transfer for the deepwater port must inspect

the deepwater port. They must indicate, by initialing each item on the declaration of inspection form, that the tanker and deepwater port comply with § 156.150 for oil, or § 127.317 for natural gas, of this chapter.

§ 150.435 When are cargo transfers not allowed?

No person may transfer cargo at a deepwater port:

(a) When the person in charge (PIC) of cargo transfer is not on duty at the deepwater port;

(b) During an electrical storm in the deepwater port's vicinity;

(c) During a fire at the port, at the onshore receiving terminal, or aboard a vessel berthed at the port, unless the PIC of cargo transfer determines that a cargo transfer should be resumed as a safety measure;

(d) When a leak develops so that a sufficient quantity of product accumulates in the cargo containment underneath the manifold or piping;

(e) When there are not enough personnel nor equipment at the port dedicated to containand remove the discharge or perform the emergency response functions as required in the port's response plan under part 154 for oil, or emergency plan under part 127 for natural gas, of this chapter;

(f) Whenever the emergency shutdown system should have activated but failed to;

(g) By lighterage, except in bunkering operations, unless otherwise authorized by the Sector Commander, or MSU Commander, with COTP and OCMI authority ;

(h) When the weather at the port does not meet the minimum operating conditions for cargo transfers as defined in the port's operations manual; or

(i) When prescribed by the deepwater port security plan under heightened security conditions at the deepwater port or its adjacent areas, or on vessels calling on or serving the deepwater port.

[USCG–1998–3884, 71 FR 57651, Sept. 29, 2006, as amended by USCG–2013–0397, 78 FR 39182, July 1, 2013]

§ 150.440 How may the Sector Commander, or MSU Commander, with COTP and OCMI authority order suspension of cargo transfers?

(a) In case of emergency, the Sector Commander, or MSU Commander, with COTP and OCMI authority may order the suspension of cargo transfers at a deepwater port to prevent the discharge, or threat of discharge, of oil or natural gas, or to protect the safety of life and property.

(b) An order of suspension may be made effective immediately.

(c) The order of suspension must state the reasons for the suspension.

(d) The licensee may petition the District Commander to reconsider the order of suspension. The petition must be in writing, unless the order of suspension takes effect immediately, in which case the petition may be made by any means, but the petition does not delay the effective date of the suspension. The decision of the District Commander is considered a final agency action.

[USCG–1998–3884, 71 FR 57651, Sept. 29, 2006, as amended by USCG–2013–0397, 78 FR 39182, July 1, 2013]

§ 150.445 When is oil in a single point mooring-oil transfer system (SPM–OTS) displaced with water?

(a) The oil in an SPM–OTS must be displaced with water, and the valve at the pipeline end manifold must be closed whenever:

(1) A storm warning forecasts weather conditions that will exceed the design operating criteria listed in the operations manual for the SPM–OTS;

(2) A vessel is about to depart the SPM because of storm conditions; or

(3) The SPM is not scheduled for use in an oil transfer operation within the next 7 days.

(b) The requirement in paragraph (a) of this section is waived if port officials can demonstrate to the Sector Commander, or MSU Commander, with COTP and OCMI authority that a satisfactory alternative means of safely securing all cargo transfer hoses can be implemented in the event of severe weather conditions.

[USCG–1998–3884, 71 FR 57651, Sept. 29, 2006, as amended by USCG–2013–0397, 78 FR 39182, July 1, 2013]

Subpart F—Emergency and Specialty Equipment

§ 150.500 What does this subpart do?

This subpart concerns requirements for maintenance, repair, and operational testing of emergency and specialty equipment at a deepwater port.

MAINTENANCE AND REPAIR

§ 150.501 How must emergency equipment be maintained and repaired?

All lifesaving, firefighting, and other emergency equipment at a deepwater port, including additional equipment not required to be on board the deepwater port, must be maintained in good working order and repaired according to the deepwater port's planned maintenance program and the requirements outlined in this subpart.

[USCG–1998–3884, 71 FR 57651, Sept. 29, 2006, as amended by USCG–2013–0397, 78 FR 39182, July 1, 2013]

LIFESAVING EQUIPMENT (GENERAL)

§ 150.502 What are the maintenance and repair requirements for lifesaving equipment?

(a) Each deepwater port must have on board, or in the operator's principal office in the case of an unmanned port, the manufacturer's instructions for performing onboard maintenance and repair of the port's lifesaving equipment. The instructions must include the following for each item of equipment, as applicable:

(1) Instructions for maintenance and repair;

(2) A checklist for use when carrying out the monthly inspections required under § 150.513 of this part;

(3) A schedule of periodic maintenance;

(4) A diagram of lubrication points with the recommended lubricants;

(5) A list of replaceable parts;

(6) A list of spare parts sources; and

(7) A log for records of inspections and maintenance.

(b) In lieu of the manufacturer's instructions required under paragraph (a) of this section, the deepwater port may have its own onboard planned maintenance program for maintenance and repair that is equivalent to the procedures recommended by the equipment manufacturer.

(c) The deepwater port must designate a person in charge of ensuring that maintenance and repair is carried out in accordance with the instructions required in paragraph (a) of this section.

(d) If deficiencies in the maintenance or condition of lifesaving equipment are identified, the Sector Commander, or MSU Commander, with COTP and OCMI authority may review the instructions under paragraph (a) of this section and require appropriate changes to the instructions or operations to provide for adequate maintenance and readiness of the equipment.

(e) When lifeboats, rescue boats, and liferafts are not fully operational because of ongoing maintenance or repairs, there must be a sufficient number of fully operational lifeboats and liferafts available for use to accommodate all persons on the deepwater port.

(f) Except in an emergency, repairs or alterations affecting the performance of lifesaving equipment must not be made without notifying the Sector Commander, or MSU Commander, with COTP and OCMI authority in advance. The person in charge must report emergency repairs or alterations to lifesaving equipment to the Sector Commander, or MSU Commander, with COTP and OCMI authority , as soon as practicable.

(g) The person in charge must ensure that spare parts and repair equipment are provided for each lifesaving appliance and component subject to excessive wear or consumption.

[USCG–1998–3884, 71 FR 57651, Sept. 29, 2006, as amended by USCG–2013–0397, 78 FR 39182, July 1, 2013]

LAUNCHING APPLIANCES

§ 150.503 What are the time interval requirements for maintenance on survival craft falls?

(a) Each fall used in a launching device for survival craft or rescue boats must be turned end-for-end at intervals of not more than 30 months.

(b) Each fall must be replaced by a new fall when deteriorated, or at intervals of not more than 5 years, whichever is earlier.

(c) A fall that cannot be turned end-for-end under paragraph (a) of this section must be carefully inspected between 24 and 30 months after its installation. If the inspection shows that the fall is faultless, the fall may be continued in service up to 4 years after its installation. It must be replaced by a new fall 4 years after installation.

§ 150.504 When must the operator service and examine lifeboat and rescue boat launching appliances?

(a) The operator must service launching appliances for lifeboats and rescue boats at intervals recommended in the manufacturer's instructions under § 150.502(a), or according to the deepwater port's planned maintenance program under § 150.502(b).

(b) The operator must thoroughly examine launching appliances for lifeboats and rescue boats at intervals of not more than 5 years. Upon completion of the examination, the operator must subject the winch brakes of the launching appliance to a dynamic test.

§ 150.505 When must the operator service and examine lifeboat and rescue boat release gear?

(a) The operator must service lifeboat and rescue boat release gear at intervals recommended in the manufacturer's instructions under § 150.502(a), or according to the deepwater port's planned maintenance program under § 150.502(b).

(b) The operator must subject lifeboat and rescue boat release gear to a thorough examination at each annual self-certification inspection by personnel trained in examining the gear.

INFLATABLE LIFESAVING APPLIANCES

§ 150.506 When must the operator service inflatable lifesaving appliances and marine evacuation systems?

(a) The operator must service each inflatable lifejacket, hybrid inflatable lifejacket, and marine evacuation system at 1-year intervals after its initial packing. The operator may delay the servicing for up to 5 months to meet the next scheduled inspection of the deepwater port.

(b) The operator must service each inflatable liferaft no later than the month and year on its servicing sticker under 46 CFR 160.151–57(m)(3)(ii), except that the operator may delay servicing by up to 5 months to meet the next scheduled inspection of the deepwater port. The operator must also service each inflatable liferaft:

(1) Whenever the container of the raft is damaged; or

(2) Whenever the container straps or seals are broken.

§ 150.507 How must the operator service inflatable lifesaving appliances?

(a) The operator must service each inflatable liferaft according to 46 CFR subpart 160.151.

(b) The operator must service each inflatable lifejacket according to 46 CFR subpart 160.176.

(c) The operator must service each hybrid inflatable lifejacket according to the owner's manual and the procedures in 46 CFR subpart 160.077.

§ 150.508 What are the maintenance and repair requirements for inflatable rescue boats?

The operator must perform the maintenance and repair of inflatable rescue boats according to the manufacturer's instructions.

OPERATIONAL TESTS AND INSPECTIONS (GENERAL)

§ 150.509 How must emergency equipment be tested and inspected?

All lifesaving, firefighting, and other emergency equipment at a deepwater port must be tested and inspected under this subpart.

§ 150.510 How must tested emergency equipment be operated?

The equipment must be operated under the operating instructions of the equipment's manufacturer when tests or inspections include operational testing of emergency equipment.

§ 150.511 What are the operational testing requirements for lifeboat and rescue boat release gear?

(a) Lifeboat and rescue boat release gear must be operationally tested under a load of 1.1 times the total mass of the lifeboat or rescue boat when loaded with its full complement of persons and equipment.

(b) The test must be conducted whenever the lifeboat, rescue boat, or its release gear is overhauled, or at least once every 5 years.

(c) The The Sector Commander, or MSU Commander, with COTP and OCMI authority may consider alternate operational test procedures to those under paragraph (a) of this section.

[USCG–1998–3884, 71 FR 57651, Sept. 29, 2006, as amended by USCG–2013–0397, 78 FR 39182, July 1, 2013]

FREQUENCY OF TESTS AND INSPECTIONS

§ 150.512 What occurs during the weekly tests and inspections?

The required weekly tests and inspections of lifesaving equipment are as follows:

(a) The operator must visually inspect each survival craft, rescue boat, and launching device to ensure its readiness for use;

(b) The operator must test the general alarm system; and

(c) The operator must test for readiness of the engine, starting device, and communications equipment of each lifeboat and rescue boat according to the manufacturer's instructions.

§ 150.513 What occurs during the monthly tests and inspections?

(a) The operator must inspect each item of lifesaving equipment under § 150.502(b) of this subpart monthly, to ensure that the equipment is complete and in good order. The operator must keep on the deepwater port, or in the operator's principal office in the case of an unmanned deepwater port, a report of the inspection that includes a statement as to the condition of the equipment, and make the report available for review by the Coast Guard.

(b) The operator must test, on a monthly basis, each emergency position indicating radio beacon (EPIRB) and each search and rescue transponder (SART), other than an EPIRB or SART in an inflatable liferaft. The operator must test the EPIRB using the integrated test circuit and output indicator to determine whether the EPIRB is operational.

§ 150.514 What are the annual tests and inspections?

At least annually, the operator must:

(a) Strip, clean, thoroughly inspect, and, if needed, repair each lifeboat, rescue boat, and liferaft. At that time, the operator must also empty, clean, and refill each fuel tank with fresh fuel;

(b) Thoroughly inspect and, if needed, repair each davit, winch, fall, and other launching device;

(c) Check all lifesaving equipment and replace any item that is marked with an expiration date that has passed;

(d) Check all lifesaving equipment batteries and replace any battery that is marked with an expiration date that has passed; and

(e) Replace any battery that is not marked with an expiration date if that battery is used in an item of lifesaving equipment, except for a storage battery used in a lifeboat or rescue boat.

(f) The requirements in this section do not relieve the person in charge of the requirement to keep the equipment ready for immediate use.

WEIGHT TESTING

§ 150.515 What are the requirements for weight testing of newly installed or relocated craft?

(a) The operator must perform installation weight testing, using the procedure outlined in 46 CFR 199.45(a)(1) on each new lifeboat, rescue boat, and davit-launched liferaft system.

(b) The operator must conduct installation weight tests, according to paragraph (a) of this section, when survival crafts are relocated to another deepwater port.

§ 150.516 What are the periodic requirements for weight testing?

The operator must weight test, using the procedure outlined in 46 CFR 199.45(a)(1), each lifeboat, davit-launched liferaft, and rescue boat every time a fall is replaced or turned end-for-end.

§ 150.517 How are weight tests supervised?

(a) The installation and periodic tests required by §§ 150.515 and 150.516 of this subpart must be supervised by a

person familiar with lifeboats, davit-launched liferafts, rescue boats, and with the test procedures under those sections.

(b) The person supervising the tests must attest, in writing, that the tests have been performed according to Coast Guard regulations. The operator must keep a copy of the supervisor's attesting statement on board the deepwater port, or in the operator's principal office in the case of an unmanned deepwater port, and make it available to the Sector Commander, or MSU Commander, with COTP and OCMI authority.

[USCG–1998–3884, 71 FR 57651, Sept. 29, 2006, as amended by USCG–2013–0397, 78 FR 39182, July 1, 2013]

PERSONAL SAFETY GEAR

§ 150.518 What are the inspection requirements for work vests and immersion suits?

(a) All work vests and immersion suits must be inspected by the owner or operator pursuant to § 150.105 of this part to determine whether they are in serviceable condition.

(b) If a work vest or immersion suit is inspected and is in serviceable condition, then it may remain in service. If not, then it must be removed from the deepwater port.

EMERGENCY LIGHTING AND POWER SYSTEMS

§ 150.519 What are the requirements for emergency lighting and power systems?

(a) The operator must test and inspect the emergency lighting and power systems at least once a week to determine if they are in proper operating condition. If they are not in proper operating condition, then the operator must repair or replace their defective parts.

(b) The operator must test, under load, each emergency generator driven by an internal combustion engine that is used for an emergency lighting and power system at least once per month for a minimum of 2 hours.

(c) The operator must test each storage battery for the emergency lighting and power systems at least once every 6 months to demonstrate the ability of the batteries to supply the emergency loads for an 8-hour period. The operator must follow the manufacturer's instructions in performing the battery test to ensure the batteries are not damaged during testing.

FIRE EXTINGUISHING EQUIPMENT

§ 150.520 When must fire extinguishing equipment be tested and inspected?

The operations manual must specify how and when the operator will test and inspect each portable fire extinguisher, semi-portable fire extinguisher, and fixed fire extinguishing system. These specifications must accord with 46 CFR 31.10–18.

§ 150.521 What records are required?

(a) The operator must maintain a record of each test and inspection under § 150.520 of this part on the deepwater port, or in the operator's principal office in the case of an unmanned deepwater port, for at least 2 years.

(b) The record must show:

(1) The date of each test and inspection;

(2) The number or other identification of each fire extinguisher or system tested or inspected; and

(3) The name of the person who conducted the test or inspection and the name of the company that person represents.

[USCG–1998–3884, 71 FR 57651, Sept. 29, 2006, as amended by USCG–2013–0397, 78 FR 39182, July 1, 2013]

MISCELLANEOUS OPERATIONS

§ 150.530 What may the fire main system be used for?

The fire main system may be used only for firefighting and deck washing, unless it is capable of being isolated and can provide the applicable minimum pressures required in § 149.416 of this chapter.

§ 150.531 How many fire pumps must be kept ready for use at all times?

At least one of the fire pumps required by this subchapter must be kept ready for use at all times.

§ 150.532 What are the requirements for connection and stowage of fire hoses?

(a) At least one length of fire hose, with a combination nozzle, must be connected to each fire hydrant at all times. If it is exposed to the weather, the fire hose may be removed from the hydrant during freezing weather.

(b) When not in use, a fire hose connected to a fire hydrant must be stowed on a hose rack.

(c) The hydrant nearest the edge of a deck must have enough fire hose length connected to it to allow 10 feet of hose, when pressurized, to curve over the edge.

§ 150.540 What are the restrictions on fueling aircraft?

If the deepwater port is not equipped with a permanent fueling facility, the Sector Commander, or the MSU Commander with COTP and OCMI authority's approval is necessary before aircraft may be fueled at the port.

[USCG–1998–3884, 71 FR 57651, Sept. 29, 2006, as amended by USCG–2013–0397, 78 FR 39182, July 1, 2013]

§ 150.550 What are the requirements for the muster list?

(a) A muster list must be posted on each pumping platform complex.

(b) The muster list must:

(1) List the name and title of each person, in order of succession, who is the person in charge of the pumping platform complex for purposes of supervision during an emergency;

(2) List the special duties and duty stations for each person on the pumping platform complex, in the event of an emergency that requires the use of equipment covered by part 149 of this chapter; and

(3) Identify the signals for calling persons to their emergency stations and for abandoning the pumping platform complex.

§ 150.555 How must cranes be maintained?

Cranes must be operated, maintained, and tested in accordance with 46 CFR part 109, subpart F.

Subpart G—Workplace Safety and Health

§ 150.600 What does this subpart do?

This subpart sets safety and health requirements for the workplace on a deepwater port.

SAFETY AND HEALTH (GENERAL)

§ 150.601 What are the safety and health requirements for the workplace on a deepwater port?

(a) Each operator of a deepwater port must ensure that the port complies with the requirements of this subpart, and must ensure that all places of employment within the port are:

(1) Maintained in compliance with workplace safety and health regulations of this subpart; and

(2) Free from recognized hazardous conditions.

(b) Persons responsible for actual operations, including owners, operators, contractors, and subcontractors must ensure that those operations subject to their control are:

(1) Conducted in compliance with workplace safety and health regulations of this subpart; and

(2) Free from recognized hazardous conditions.

(c) The term ''recognized hazardous conditions,'' as used in this subpart, means conditions that are:

(1) Generally known among persons in the affected industry as causing, or likely to cause, death or serious physical harm to persons exposed to those conditions; and

(2) Routinely controlled in the affected industry.

§ 150.602 What occupational awareness training is required?

(a) Each deepwater port operator must ensure that all deepwater port personnel are provided with information and training on recognized hazardous conditions in their workplace, including, but not limited to, electrical, mechanical, and chemical hazards. Specific required training topics are outlined in § 150.15(w) of this part.

(b) As an alternative to compliance with the specific provisions of this subpart, an operator may provide, for

workplace safety and health, the implementation of an approved, port-specific safety and environmental management program (SEMP). Operators should consult with the Commandant (CG–5P) in preparing an SEMP. Five copies of a proposed SEMP must be submitted to the Commandant for evaluation. The Commandant may consult with the local Sector Commander, or with the local MSU Commander, with COTP and OCMI authority , and will approve the SEMP if he or she finds that the SEMP provides at least as much protection of workplace safety and health as do the specific provisions of this subpart.

[USCG–1998–3884, 71 FR 57651, Sept. 29, 2006, as amended by USCG–2013–0397, 78 FR 39182, July 1, 2013]

§ 150.603 What emergency response training is required?

The requirements for emergency response training must be outlined in the deepwater port operations manual.

[USCG–1998–3884, 71 FR 57651, Sept. 29, 2006, as amended by USCG–2013–0397, 78 FR 39183, July 1, 2013]

§ 150.604 Who controls access to medical monitoring and exposure records?

If medical monitoring is performed or exposure records are maintained by an employer, the owner, operator, or person in charge must establish procedures for access to these records by personnel.

§ 150.605 What are the procedures for reporting a possible workplace safety or health violation at a deepwater port?

Any person may notify the Sector Commander, or the MSU Commander, with COTP and OCMI authority verbally or in writing of:

(a) A possible violation of a regulation in this part; or

(b) A hazardous or unsafe working condition on any deepwater port.

[USCG–1998–3884, 71 FR 57651, Sept. 29, 2006, as amended by USCG–2013–0397, 78 FR 39183, July 1, 2013]

§ 150.606 After learning of a possible violation, what does the Sector Commander, or the MSU Commander, with COTP and OCMI authority do?

After reviewing the information received under § 150.605 of this part, and conducting any necessary investigation, the Sector Commander, or the MSU Commander, with COTP and OCMI authority notifies the owner or operator of any deficiency or hazard and initiates enforcement measures as the circumstances warrant. The identity of any person making a report of a violation will remain confidential, except to the extent necessary for the performance of official duties or as agreed to by the person.

[USCG–1998–3884, 71 FR 57651, Sept. 29, 2006, as amended by USCG–2013–0397, 78 FR 39183, July 1, 2013]

GENERAL WORKPLACE CONDITIONS

§ 150.607 What are the general safe working requirements?

(a) All equipment, including machinery, cranes, derricks, portable power tools, and, most importantly, safety gear must be used in a safe manner and in accordance with the manufacturer's recommended practice, unless otherwise stated in this subchapter.

(b) All machinery and equipment must be maintained in proper working order or removed.

PERSONAL PROTECTIVE EQUIPMENT

§ 150.608 Who is responsible for ensuring that the personnel use or wear protective equipment and are trained in its use?

(a) Each deepwater port operator must ensure that all personnel wear personal protective equipment when within designated work areas.

(b) Each deepwater port operator must ensure that:

(1) All personnel engaged in the operation are trained in the proper use, limitations, and maintenance of the personal protective equipment specified by this subpart;

(2) The equipment is maintained and used or worn as required by this subpart; and

(3) The equipment is made available and on hand for all personnel engaged in the operation.

EYES AND FACE

§ 150.609 When is eye and face protection required?

The operator must provide eye and face protectors for the use of persons engaged in or observing activities where damage to the eye is possible, such as welding, grinding, machining, chipping, handling hazardous materials, or burning or cutting acetylene. These eye and face protectors must be:

(a) Properly marked and in compliance with the requirements of 29 CFR 1910.133; and

(b) Maintained in good condition or replaced when necessary.

§ 150.610 Where must eyewash equipment be located?

Portable or fixed eyewash equipment providing emergency relief must be immediately available near any area where there is a reasonable probability that eye injury may occur.

HEAD

§ 150.611 What head protection is required?

The deepwater port operator must ensure that where there is a reasonable probability of injury from falling objects or contact with electrical conductors, personnel working or visiting such an area wear head protectors designed to protect them against such injury and complying with 29 CFR 1910.135.

FEET

§ 150.612 What footwear is required?

The deepwater port operator must ensure that while personnel are working in an area, or engaged in activities, where there is a reasonable probability for foot injury to occur, they wear footwear that complies with 29 CFR 1910.136, except for when environmental conditions exist that present a hazard greater than that against which the footwear is designed to protect.

NOISE AND HEARING PROTECTION

§ 150.613 What are the requirements for a noise monitoring and hearing protection survey?

(a) The deepwater port operator must measure noise and provide hearing protection in accordance with 29 CFR 1910.95.

(b) The initial noise survey for a deepwater port must be completed within one year of beginning operations.

CLOTHING

§ 150.614 When is protective clothing required?

The deepwater port operator must ensure that personnel exposed to flying particles, radiant energy, heavy dust, or hazardous materials wear clothing and gloves that protect against the hazard involved.

ELECTRICAL

§ 150.615 What safe practices are required?

(a) The deepwater port operator must ensure that before personnel begin work that might expose them to an electrical charge, they turn off the electricity, unless doing so is not feasible.

(b) The deepwater port operator must ensure that personnel turning off equipment pursuant to paragraph (a) of this section follow the lockout or tagging procedures specified in 29 CFR 1910.147, and in §§ 150.616 and 150.617 of this part.

(c) The deepwater port operator must ensure that, to prevent electrical shock, personnel receive training in electrical, safety-related work practices in the area of the work they perform, including the use of electrical personal protective equipment appropriate to protect against potential electrical hazards.

[USCG–1998–3884, 71 FR 57651, Sept. 29, 2006, as amended by USCG–2013–0397, 78 FR 39183, July 1, 2013]

LOCKOUT/TAGOUT

§ 150.616 What are the requirements for lockout?

The deepwater port operator must ensure that, if electrical, hydraulic, mechanical, or pneumatic equipment does not need to be powered during the work described in § 150.615(a) of this part, and has a lockout or other device to prevent the equipment from being turned on unintentionally, that the lockout or other device is activated.

[USCG–1998–3884, 71 FR 57651, Sept. 29, 2006, as amended by USCG–2013–0397, 78 FR 39183, July 1, 2013]

§ 150.617 What are the requirements for tagout?

(a) The deepwater port operator must ensure that, before work takes place on equipment that is disconnected from the power source, a tag complying with this section is placed at the location where the power is disconnected. The operator must ensure that, if there is a control panel for the equipment in line between the equipment and the location where the power is disconnected, a tag complying with this section is also placed on the control panel.

(b) Each tag or sign must have words stating:

(1) That equipment is being worked on;

(2) That power must not be restored or the equipment activated; and

(3) The name of the person who placed the tag.

(c) Only the person who placed the tag, that person's immediate supervisor, or the relief person of either, is authorized to remove the tag.

RESPIRATORY PROTECTION

§ 150.618 What are the requirements for respiratory protection?

(a) The deepwater port operator must ensure that respiratory protection measures are taken in compliance with 29 CFR 1910.134 including establishment of a formal respiratory protection program.

(b) The deepwater port operator must ensure that measures for protection from exposure to asbestos are taken in compliance with 29 CFR 1910.1001.

(c) The deepwater port operator must ensure that measures for protection from exposure to inorganic lead are taken in compliance with 29 CFR 1910.1025.

FALL ARREST

§ 150.619 What are the fall arrest system requirements?

(a) The deepwater port operator must ensure that all personnel who are exposed to the risk of falling more than 6 feet, or who are at risk of falling any distance onto equipment with irregular surfaces, exposed moving components, electrically energized cables or connectors, or water, are protected against such a fall by guardrails or other measures that comply with 29 CFR 1910.23 or 1910.28, or by the use of suitable lifesaving equipment that complies with 46 CFR part 160.

(b) In addition, the operator must take measures to control the risk of falling, tripping, or slipping in work areas and walkways due to the presence of loose material or wet conditions, including spills.

MACHINE GUARDS

§ 150.620 What are the requirements for protecting personnel from machinery?

The deepwater port operator must ensure that all personnel are protected from the risks created by operating machinery through the use of guard devices or other measures that comply with 29 CFR 1910.212, or through the use of conspicuously posted warning signs that comply with § 150.626 of this part.

SLINGS

§ 150.621 What are the requirements for slings?

The use of slings for handling material must comply with the requirements of 29 CFR 1910.184.

WARNING SIGNS

§ 150.622 What are the warning sign requirements?

The construction and use of warning signs must be in compliance with 29 CFR 1910.144 and 1910.145.

CONFINED SPACE SAFETY

§ 150.623 What are the requirements for protecting personnel from hazards associated with confined spaces?

(a) All personnel must be protected by suitable measures from inadvertently entering a confined space containing a hazardous atmosphere that can cause death or serious injury.

(b) Each deepwater port operator must evaluate the specific hazards associated with entering the port's confined spaces, and develop a confined space safe entry program that complies with:

(1) 29 CFR 1910.146 for permit-required confined spaces, where applicable; and

(2) A national consensus standard, as that term is defined in 29 CFR 1910.2, or that is set by a nationally recognized testing laboratory as defined in 29 CFR 1910.7 and that provides levels of personnel protection at least equivalent to those provided for shipyard personnel by 29 CFR part 1915, subpart B.

(c) To implement the confined space safe entry program, the deepwater port operator must determine the education, training, and experience needed by the designated competent persons to safely conduct their duties, including:

(1) Identification, testing, and certification of confined spaces; and

(2) Training of personnel regarding dangers.

(d) These measures must be specified in the port operations manual, along with a list of all confined spaces on the port, describing the specific hazards associated with each such space.

[USCG–1998–3884, 71 FR 57651, Sept. 29, 2006, as amended by USCG–2013–0397, 78 FR 39183, July 1, 2013]

BLOOD-BORNE PATHOGENS

§ 150.624 What are the requirements for protecting personnel from blood-borne pathogens?

Measures for protection from the dangers of blood-borne pathogens must be taken in compliance with 29 CFR 1910.1030.

HAZARD COMMUNICATION PROGRAM

§ 150.625 What must the hazard communication program contain?

(a) Each deepwater port must have a hazard communication program available for the training of, and review by, all personnel on the deepwater port.

(b) The program must be in writing and describe or include:

(1) An inventory of each hazardous material on the deepwater port;

(2) The potential hazards of the material;

(3) The material's intended use on the deepwater port;

(4) The methods for handling and storing the material;

(5) The protective measures and equipment used to avoid hazardous exposure;

(6) The labeling, marking, or tagging of the material;

(7) The special precautions, such as lockout and tagout under §§ 150.616 and 150.617 of this part, that should be emphasized when working around the material;

(8) Information and training required for personnel on board the deepwater port; and

(9) A material safety data sheet for the material.

(c) The information on a material safety data sheet itself may be used by the employer as a tool for educating employees about the hazards posed by the material, provided the employees acknowledge and can demonstrate appropriate precautionary measures to minimize risk to health and safety.

(d) The program must be supplemented as necessary to address each hazardous material newly introduced on the deepwater port.

[USCG–1998–3884, 71 FR 57651, Sept. 29, 2006, as amended by USCG–2013–0397, 78 FR 39183, July 1, 2013]

§ 150.626 What is the hazard communication program used for?

(a) The hazard communication program must ensure that all deepwater port employees, when required by their duties, work safely and responsibly with hazardous materials.

(b) The person in charge for safety must ensure that, before a person is allowed to work at the deepwater port:

(1) A copy of the hazard communication program is made available to the person; and

(2) The person is trained in the information contained in the program.

(c) The training must be supplemented to address each hazardous material newly introduced on the deepwater port.

§ 150.627 Must material safety data sheets be available to all personnel?

(a) The person in charge must ensure that a material safety data sheet (MSDS) for each hazardous material on the fixed or floating deepwater port is made available to all personnel on the port.

(b) Each MSDS must contain at least information on the use, proper storage, potential hazards, and appropriate protective and response measures to be taken when exposed to or handling the material.

§ 150.628 How must the operator label, tag, and mark a container of hazardous material?

The operator must label, tag, or mark each container of hazardous material with the identity of the hazardous material and the appropriate physical, health, reactive and other special condition hazard warnings. The only exception is for portable containers that transfer hazardous material from a labeled container to the work site for immediate use by the person who performs the transfer.

Subpart H—Aids to Navigation

§ 150.700 What does this subpart do?

This subpart provides requirements for the operation of aids to navigation at a deepwater port.

§ 150.705 What are the requirements for maintaining and inspecting aids to navigation?

(a) All aids to navigation must be maintained in proper operating condition at all times.

(b) The Coast Guard may inspect all aids to navigation at any time without notice.

§ 150.710 What are the requirements for supplying power to aids to navigation?

The power of all navigation aids must be maintained, at all times, at or above the level recommended by the equipment's manufacturer.

§ 150.715 What are the requirements for lights used as aids to navigation?

(a) Each light under part 149, subpart E of this chapter, used as a navigation aid on a deepwater port, must be lit continuously from sunset to sunrise.

(b) During construction, a platform or single point mooring, if positioned on the surface or within the net under keel depth for tankers transiting within the safety zone, must be marked with at least one of the following:

(1) The obstruction lights required for the structure in part 149, subpart E of this chapter;

(2) The fixed lights of a vessel attending the structure; or

(3) The general illumination lights on the structure, if they meet or exceed the intensity required for obstruction lights required for the structure.

(c) The focal plane of each obstruction light and lit rotating beacon must always coincide with the horizontal plane that passes through the light source.

§ 150.720 What are the requirements for sound signals?

The sound signal on each pumping platform complex must be operated whenever the visibility in any horizontal direction from the structure is less than 5 miles. If the platform is under construction, this requirement may be met by the use of a 2-second whistle blast, made every 20 seconds by a vessel moored at the platform.

Subpart I—Reports and Records

§ 150.800 What does this subpart do?

This subpart concerns reports and records that the licensee must keep and submit.

REPORTS

§ 150.805 What reports must be sent both to a classification society and to the Coast Guard?

The licensee must submit to the Sector Commander, or to the MSU Commander, with COTP and OCMI authority a copy of each report submitted to an authorized classification society, as defined in 46 CFR 8.100, for maintenance of a single point mooring's class under the rules of that society.

[USCG–1998–3884, 71 FR 57651, Sept. 29, 2006, as amended by USCG–2013–0397, 78 FR 39183, July 1, 2013]

§ 150.810 Reporting a problem with an aid to navigation.

(a) Any problem affecting the operation or characteristics of a navigation aid at the deepwater port must be reported to the District Commander by the fastest means available. The report must identify:

(1) The navigation aid affected;

(2) The aid's location;

(3) The nature of the problem; and

(4) The estimated repair time.

(b) When the problem is corrected, the District Commander must be notified.

§ 150.812 What is the purpose of reporting casualties on deepwater ports?

The Coast Guard, upon receipt of a reported marine casualty on a deepwater port, as outlined in § 150.815 of this part, will conduct an investigation to determine the cause of the incident and to take appropriate measures to promote safety of life and property. The Coast Guard investigator will follow the procedures outlined in 46 CFR subpart 4.07 in conducting the investigation.

[USCG–1998–3884, 71 FR 57651, Sept. 29, 2006, as amended by USCG–2013–0397, 78 FR 39183, July 1, 2013]

§ 150.815 How must casualties be reported?

(a) Immediately after aiding the injured and stabilizing the situation, the owner, operator, or person in charge of a deepwater port must notify the nearest Sector, Marine Safety Unit, or other Coast Guard unit of each event on, or involving, the deepwater port that results in one or more of the following:

(1) Loss of life;

(2) An injury that requires professional medical treatment beyond first aid and, if the person is engaged or employed on the deepwater port, that renders the individual unfit to perform his or her routine duties;

(3) Impairment of the port's operations or primary lifesaving or firefighting equipment; or

(4) Property damage in excess of $100,000, including damage resulting from a vessel or aircraft striking the port. This amount includes the cost of labor and material to restore all affected items, including, but not limited to, restoring the port and the vessel or aircraft to their condition before the damage. This amount does not include the cost of salvage, cleaning, gas freeing, dry-docking, or demurrage of the port, vessel, or aircraft.

(b) The notice under paragraph (a) of this section must identify the following:

(1) The deepwater port involved;

(2) The owner, operator, or person in charge of the port;

(3) The nature and circumstances of the event; and

(4) The nature and extent of the injury and damage resulting from the event.

(c) The operator will ensure that the report contains the information pertinent to Outer Continental Shelf operations as outlined in part 140 of this chapter when the deepwater port is colocated on a facility regulated by the Bureau of Ocean Energy Management.

[USCG–1998–3884, 71 FR 57651, Sept. 29, 2006, as amended by USCG–2011–0257, 76 FR 31837, June 2, 2011; USCG–2013–0397, 78 FR 39183, July 1, 2013]

§ 150.820 When must a written report of casualty be submitted, and what must it contain?

(a) In addition to the notice of casualty under § 150.815 of this part, the owner, operator, or person in charge of a deepwater port must submit a written report of the event to the nearest Sector Commander, or the nearest MSU Commander, with COTP and OCMI authority within 5 days of the

casualty notice. The report may be on Form 2692, Report of Marine Accident, Injury, or Death, or in narrative form if it contains all of the applicable information requested in Form 2692. Copies of Form 2692 are available from the Sector Commander, or from the MSU Commander, with COTP and OCMI authority.

(b) The written report must also include the information relating to alcohol and drug involvement specified by 46 CFR 4.05–12. The deepwater port operator will ensure compliance with the chemical testing procedures outlined in 46 CFR part 16.

(c) If filed immediately after the event, the written report required by paragraph (a) of this section serves as the notice required under § 150.815 of this part.

(d) The operator will ensure that the written report is provided to the nearest Bureau of Ocean Energy Management (BOEM) office when the deepwater port is co-located with a BOEM-regulated facility.

[USCG–1998–3884, 71 FR 57651, Sept. 29, 2006, as amended by USCG–2011–0257, 76 FR 31837, June 2, 2011; USCG–2013–0397, 78 FR 39183, July 1, 2013]

§ 150.825 Reporting a diving-related casualty.

Deaths and injuries related to diving within the safety zone of a deepwater port must be reported according to 46 CFR 197.484 and 197.486, rather than to §§ 150.815 and 150.820 of this part.

[USCG–1998–3884, 71 FR 57651, Sept. 29, 2006, as amended by USCG–2013–0397, 78 FR 39183, July 1, 2013]

§ 150.830 Reporting a pollution incident.

Oil pollution incidents involving a deepwater port are reported according to §§ 135.305 and 135.307 of this chapter.

§ 150.835 Reporting sabotage or subversive activity.

The owner, operator, or person in charge of a deepwater port must immediately report to the Sector Commander, or the MSU Commander, with COTP and OCMI authority, by the fastest possible means, any evidence of sabotage or subversive activity against any vessel at the deepwater port or against the deepwater port itself.

[USCG–1998–3884, 71 FR 57651, Sept. 29, 2006, as amended by USCG–2013–0397, 78 FR 39183, July 1, 2013]

RECORDS

§ 150.840 What records must be kept?

(a) The licensee must keep copies at the deepwater port of the reports, records, test results, and operating data required by this part. In the case of unmanned deepwater ports, these copies must be kept at the operator's principal office rather than on the deepwater port.

(b) The copies must be readily available to Coast Guard inspectors.

(c) Except for personnel records under § 150.845 of this part, the copies must be kept for 3 years.

[USCG–1998–3884, 71 FR 57651, Sept. 29, 2006, as amended by USCG–2013–0397, 78 FR 39183, July 1, 2013]

§ 150.845 Personnel records.

The licensee must keep documentation on the designation and qualification of the supervisory positions, outlined in the port operations manual, that are responsible for the management of the deepwater port. These records must be kept for the life of the deepwater port.

§ 150.850 How long must a declaration of inspection form be kept?

The licensee must keep signed copies of the declaration of inspection forms required by § 150.430 of this part for one month from the date of signature.

[USCG–1998–3884, 71 FR 57651, Sept. 29, 2006, as amended by USCG–2013–0397, 78 FR 39183, July 1, 2013]

Subpart J—Safety Zones, No Anchoring Areas, and Areas To Be Avoided

§ 150.900 What does this subpart do?

(a) This subpart provides requirements for the establishment, restrictions, and location of safety zones, no anchoring areas (NAAs), and areas to be avoided (ATBAs) around deepwater ports.

(b) Subpart D of this part, concerning vessel navigation and activities permitted and prohibited at deepwater ports, applies to safety zones, NAAs, ATBAs, and their adjacent waters; and supplements the International Regulations for Preventing Collisions at Sea.

(c) Recommended shipping safety fairways associated with deepwater ports are described in part 166 of this chapter.

§ 150.905 Why are safety zones, no anchoring areas, and areas to be avoided established?

(a) Safety zones, no anchoring areas (NAAs) and areas to be avoided (ATBAs) under this subchapter are established to promote safety of life and property, marine environmental protection, and navigational safety at deepwater ports and adjacent waters.

(b) Safety zones are the only federally regulated navigation areas. They accomplish these objectives by preventing or controlling specific activities, limiting access by vessels or persons, and by protecting the living resources of the sea from harmful agents.

(c) The NAAs and ATBAs are established via the International Maritime Organization (IMO). An NAA, specifically established to protect vessels in transit and sub-surface deepwater port components, will be mandatory. An ATBA will be a recommendatory routing measure.

(d) The sizes of restricted areas will be the minimum size needed to ensure safety, while at the same time considering potential impacts on other activities, including recreational boating, fishing, and Outer Continental Shelf activity.

[USCG–1998–3884, 71 FR 57651, Sept. 29, 2006, as amended by USCG–2013–0397, 78 FR 39183, July 1, 2013]

§ 150.910 What installations, structures, or activities are prohibited in a safety zone?

No installations, structures, or activities that are incompatible with or that present an unacceptable risk to safety of the deepwater port's operations or activity are allowed in the safety zone of a deepwater port.

§ 150.915 How are safety zones, no anchoring areas, and areas to be avoided established and modified?

(a) Safety zones are developed and designated during the application process for a deepwater port license, and may be established or modified through rulemaking. Rulemakings will afford prior public notice and comment, except when there is good cause not to do so, for example due to an imminent threat to the safety of life and property.

(b) Before a safety zone, no anchoring area (NAA), or area to be avoided (ATBA) is established, all factors detrimental to safety are considered, including but not limited to:

(1) The scope and degree of the risk or hazard involved;

(2) Vessel traffic characteristics and trends, including traffic volume, the sizes and types of vessels involved, potential interference with the flow of commercial traffic, the presence of any unusual cargoes, and other similar factors;

(3) Port and waterway configurations and variations in local conditions of geography, climate and other similar factors;

(4) The need for granting exemptions for the installation and use of equipment or devices for use with vessel traffic services for certain classes of small vessels, such as self-propelled fishing vessels and recreational vessels;

(5) The proximity of fishing grounds, oil and gas drilling and production operations, or other potential or actual conflicting activity;

(6) Environmental factors;

(7) Economic impact and effects;

(8) Existing vessel traffic services; and

(9) Local practices and customs, including voluntary arrangements and agreements within the maritime community.

(c) The Executive Branch, acting through the Secretary of State and Commandant (CG–5P) proposes NAAs and ATBAs for deepwater ports to the International Maritime Organization (IMO) for approval. The ATBAs will be implemented after IMO approval is

granted and announced in an IMO Circular, and after publication of a notice in the FEDERAL REGISTER.

[USCG–1998–3884, 71 FR 57651, Sept. 29, 2006, as amended by USCG–2013–0397, 78 FR 39183, July 1, 2013]

§ 150.920 How can I find notice of new or proposed safety zones?

In addition to documents published in the FEDERAL REGISTER under § 150.915 of this part, the District Commander may provide public notice of new or proposed safety zones by Broadcast Notices to Mariners, Notices to Mariners, Local Notices to Mariners, newspapers, broadcast stations, or other means.

[USCG–1998–3884, 71 FR 57651, Sept. 29, 2006, as amended by USCG–2013–0397, 78 FR 39183, July 1, 2013]

§ 150.925 How long may a safety zone, no anchoring area, or area to be avoided remain in place?

A safety zone, no anchoring area, or area to be avoided may go into effect as early as initial delivery of construction equipment and materials to the deepwater port site, and may remain in place until the deepwater port is removed.

§ 150.930 What datum is used for the geographic coordinates in this subpart?

The geographic coordinates used in this subpart have been revised to enable plotting using the North American Datum of 1983 (NAD 83) and no longer require the use of any further conversion factors for correction.

[USCG–2007–27887, 72 FR 45903, Aug. 16, 2007]

§ 150.940 Safety zones for specific deepwater ports.

(a) *Louisiana Offshore Oil Port (LOOP).* (1) The location of the safety zone for LOOP is as described in Table 150.940(A) of this section:

TABLE 150.940(A)—SAFETY ZONE FOR LOOP, GULF OF MEXICO

Plotting guidance	Latitude N	Longitude W
(i) Starting at	28°55′24″	90°00′37″
(ii) A rhumb line to:	28°53′51″	90°04′07″
(iii) Then an arc with a 4,465 meter (4,883 yard) radius centered at the deepwater port's pumping platform complex	28°53′07″	90°01′30″
(iv) To a point	28°51′08″	90°03′06″
(v) Then a rhumb line to	28°50′10″	90°02′24″
(vi) Then a rhumb line to	28°49′06″	89°55′54″
(vii) Then a rhumb line to	28°48′37″	89°55′00″
(viii) Then a rhumb line to	28°52′05″	89°52′42″
(ix) Then a rhumb line to	28°53′11″	89°53′42″
(x) Then a rhumb line to	28°54′53″	89°57′00″
(xi) Then a rhumb line to	28°54′53″	89°59′36″
(xii) Then an arc with a 4,465 meter (4,883 yard) radius centered again at the deepwater port's pumping platform complex		
(xiii) To the point of starting	28°55′24″	90°00′37″

(2) The areas to be avoided within the safety zone are:

(i) The area encompassed within a circle having a 600 meter radius around the deepwater port's pumping platform complex and centered at 28°53′07″ N, 90°01′30″ W.

(ii) The six areas encompassed within a circle having a 500 meter radius around each single point mooring (SPM) deepwater at the port and centered at:

Latitude N	Longitude W
28°54′13″	90°00′37″
28°53′17″	89°59′59″
28°52′16″	90°00′19″
28°51′46″	90°01′25″
28°52′09″	90°02′33″
28°53′08″	90°03′02″

(3) The anchorage area within the safety zone is an area enclosed by the rhumb lines joining points at:

Latitude N	Longitude W
28°52′22″	89°57′47″
28°54′06″	89°56′38″

Latitude N	Longitude W
28°52′05″	89°52′42″
28°50′21″	89°53′51″
28°52′22″	89°57′47″

(b) *The Gulf Gateway Deepwater Port (GGDWP)*—(1) *Description*. The GGDWP safety zone is centered at the following coordinates: 28°05′17″ N, 93°03′07″ W. This safety zone, encompassed within a circle having a 500 meter radius around the primary component of the Gulf Gateway Deepwater Port, the submerged loading turret (buoy) and the pipeline end manifold (STL/PLEM), is located approximately 116 miles off the Louisiana coast at West Cameron Area, South Addition Block 603 ''A''.

(i) A mandatory no anchoring area contained within a circle of radius 1,500 meters centered on the following geographical position is designated as a mandatory no anchoring area: 28°05′17″ N, 93°03′07″ W.

(ii) An area to be avoided within a circle of radius 2,000 meters centered on the following geographical position is designated as an area to be avoided: 28°05′17″ N, 93°03′07″ W.

(2) *Regulations*. Deepwater port support vessels desiring to enter the safety zone must contact and obtain permission from the LNG Regasification Vessel (LNGRV) stationed at the deepwater port. The LNGRV can be contacted on VHF–FM Channel 13.

(c) *Northeast Gateway Deepwater Port (NEGDWP)*—(1) *Location*. The safety zones for the NEGDWP consist of circular zones, each with a 500-meter radius and centered on each of the deepwater port's two submerged turret loading (STL) buoys. STL Buoy ''A'' is centered at the following coordinates: 42°23′38″ N, 070°35′31″ W. STL Buoy ''B'' is centered at the following coordinates: 42°23′56″ N, 070°37′00″ W. Each safety zone is located approximately 13 miles south-southeast of the City of Gloucester, Massachusetts, in Federal waters.

(2) *No anchoring areas*. Two mandatory no anchoring areas for NEGDWP are established for all waters within circles of 1,000-meter radii centered on the submerged turret loading buoy positions set forth in paragraph (c)(1) of this section.

(3) *Area to be avoided*. An area to be avoided (ATBA) for NEGDWP is as described in Table 150.940(B):

TABLE 150.940(B)—ATBA FOR NEGDWP

Plotting guidance	Latitude N	Longitude W
(i) Starting at	42°24′17″	070°35′16″
(ii) A rhumb line to:	42°24′35″	070°36′46″
(iii) Then an arc with a 1250 meter radius centered at point	42°23′56″	070°37′00″
(iv) To a point	42°23′17″	070°37′15″
(v) Then a rhumb line to	42°22′59″	070°35′45″
(vi) Then an arc with a 1250 meter radius centered at point	42°23′38″	070°35′31″
(vii) To the point of starting	42°24′17″	070°35′16″

(4) *Regulations*. (i) In accordance with the general regulations set forth in 33 CFR 165.23 and elsewhere in this part, no person or vessel may enter the waters within the boundaries of the safety zones described in paragraph (c)(1) of this section unless previously authorized by the Captain of the Port (COTP) Boston, or his/her authorized representative.

(ii) Notwithstanding paragraph (c)(4)(i) of this section, tankers and support vessels, as defined in 33 CFR 148.5, operating in the vicinity of NEGDWP are authorized to enter and move within such zones in the normal course of their operations following the requirements set forth in 33 CFR 150.340 and 150.345, respectively.

(iii) All other vessel operators desiring to enter, operate or conduct diving operations within a safety zone described in paragraph (c)(1) of this section must contact the COTP, or the COTP's authorized representative, to obtain permission by contacting the Sector Boston Command Center at 617–223–5761 or via VHF–FM Channel 16 (156.8 MHZ). Vessel operators given permission to enter, operate, or conduct diving operations in a safety zone must comply with all directions given to

them by the COTP or the COTP's authorized representative.

(iv) No vessel, other than a support vessel or tanker calling on NEGDWP may anchor in the area described in paragraph (c)(2) of this section.

(d) *Neptune Deepwater Port (Neptune)*—(1) *Location*. The safety zones for Neptune consist of circular zones, each with a 500-meter radius and centered on each of Neptune's two submerged turret loading (STL) buoys. STL Buoy ''A'' is centered at the following coordinates: Latitude 42°29′12.3″ N, Longitude 070°36′29.7″ W; and STL Buoy ''B'': Latitude 42°27′20.5″ N, Longitude 070°36′07.3″ W. Each safety zone encompasses, within the respective 500-meter circles, the primary components of Neptune, including a submerged turret loading buoy and a pipeline end manifold. Each safety zone is located approximately eight nautical miles south-southeast of Gloucester, Massachusetts, in Federal waters.

(2) *No anchoring areas*. Two mandatory no anchoring areas for Neptune are established for all waters within circles of 1,000-meter radii centered on the submerged turret loading buoy positions set forth in paragraph (d)(1) of this section.

(3) *Area to be avoided*. An area to be avoided (ATBA) for Neptune is as described in Table 150.940(C):

TABLE 150.940(C)—ATBA FOR NEPTUNE

Plotting guidance	Latitude N	Longitude W
(i) Starting at	42°27′26.6″	70°35′13.1″
(ii) A rhumb line to	42°29′18.3″	70°35′35.4″
(iii) Then an arc with a 1250 meter radius centered at point	42°29′12.3″	70°36′29.7″
(iv) To a point	42°29′6.3″	70°37′24.0″
(v) Then a rhumb line to	42°27′14.7″	70°37′1.6″
(vi) Then an arc with a 1250 meter radius centered at point	42°27′20.5″	70°36′7.3″
(vii) To the point of starting	42°27′26.6″	70°35′13.1″

(4) *Regulations*. (i) In accordance with the general regulations set forth in 33 CFR 165.23 and elsewhere in this part, no person or vessel may enter the waters within the boundaries of the safety zones described in paragraph (d)(1) of this section unless previously authorized by the Captain of the Port (COTP) Boston, or the COTP's authorized representative.

(ii) Notwithstanding paragraph (d)(4)(i) of this section, liquefied natural gas carriers (LNGCs) and support vessels, as defined in 33 CFR 148.5, calling on Neptune, are authorized to enter and move within such zones in the normal course of their operations following the requirements set forth in 33 CFR 150.340 and 150.345, respectively.

(iii) All other vessel operators desiring to enter, operate or conduct diving operations within a safety zone described in paragraph (d)(1) of this section must contact the COTP or the COTP's authorized representative to obtain permission by contacting the Sector Boston Command Center at 617–223–5761 or via VHF–FM Channel 16 (156.8 MHZ). Vessel operators given permission to enter or operate in a safety zone must comply with all directions given to them by the COTP or the COTP's authorized representative.

(iv) No vessel, other than an LNGC or support vessel calling on Neptune, may anchor in the area described in paragraph (d)(2) of this section.

[USCG–2007–27887, 72 FR 45903, Aug. 16, 2007, as amended by USCG–2007–0087, 73 FR 34194, June 17, 2008; USCG–2009–0589, 75 FR 51376, Aug. 20, 2010; USCG–2013–0397, 78 FR 39183, July 1, 2013]

SUBCHAPTER O—POLLUTION

PART 151—VESSELS CARRYING OIL, NOXIOUS LIQUID SUBSTANCES, GARBAGE, MUNICIPAL OR COMMERCIAL WASTE, AND BALLAST WATER

Subpart A—Implementation of MARPOL 73/78 and the Protocol on Environmental Protection to the Antarctic Treaty as it Pertains to Pollution from Ships

GENERAL

Sec.
151.01 Purpose.
151.03 Applicability.
151.04 Penalties for violation.
151.05 Definitions.
151.06 Special areas.
151.07 Delegations.
151.08 Denial of entry.

OIL POLLUTION

151.09 Applicability.
151.10 Control of oil discharges.
151.11 Exceptions for emergencies.
151.13 Special areas for Annex I of MARPOL 73/78.
151.15 Reporting requirements.
151.17 Surveys.
151.19 International Oil Pollution Prevention (IOPP) Certificates.
151.21 Ships of countries not party to MARPOL 73/78.
151.23 Inspection for compliance and enforcement.
151.25 Oil Record Book.
151.26 Shipboard oil pollution emergency plans.
151.27 Plan submission and approval.
151.28 Plan review and revision.
151.29 Foreign ships.

NOXIOUS LIQUID SUBSTANCE POLLUTION

151.30 Applicability.
151.31 Where to find requirements applying to oceangoing ships carrying Category A, B, C, and D NLS.
151.32 Special areas for the purpose of Annex II.
151.33 Certificates needed to carry Category C Oil-like NLS.
151.35 Certificates needed to carry Category D NLS and Category D Oil-like NLS.
151.37 Obtaining an Attachment for NLSs to the IOPP Certificate and obtaining an NLS Certificate.
151.39 Operating requirements: Category D NLS.
151.41 Operating requirements for oceangoing ships with IOPP Certificates: Category C and D Oil-like NLSs.
151.43 Control of discharge of NLS residues.
151.47 Category D NLSs other than oil-like Category D NLSs that may be carried under this part.
151.49 Category C and D Oil-like NLSs allowed for carriage.

GARBAGE POLLUTION AND SEWAGE

151.51 Applicability.
151.53 Special areas for Annex V of MARPOL 73/78.
151.55 Recordkeeping requirements.
151.57 Garbage management plans.
151.59 Placards.
151.61 Inspection for compliance and enforcement.
151.63 Shipboard control of garbage.
151.65 Reporting requirements.
151.66 Operating requirements: Discharge of garbage in the Great Lakes and other navigable waters.
151.67 Operating requirements: Discharge of plastic prohibited.
151.69 Operating requirements: Discharge of garbage outside special areas.
151.71 Operating requirements: Discharge of garbage within special areas.
151.73 Operating requirements: Discharge of garbage from fixed or floating platforms.
151.75 Grinders or comminuters.
151.77 Exceptions for emergencies and health risks.
151.79 Operating requirements: Discharge of sewage within Antarctica.

Subpart B—Transportation of Municipal and Commercial Waste

151.1000 Purpose.
151.1003 Applicability.
151.1006 Definitions.
151.1009 Transportation of municipal or commercial waste.
151.1012 Applying for a conditional permit.
151.1015 Issuing or denying the issuance of a conditional permit.
151.1018 Withdrawal of a conditional permit.
151.1021 Appeals.
151.1024 Display of number.

Subpart C—Ballast Water Management for Control of Nonindigenous Species in the Great Lakes and Hudson River

151.1500 Purpose.
151.1502 Applicability.
151.1504 Definitions.
151.1505 Severability.
151.1506 Restriction of operation.
151.1508 Revocation of clearance.

151.1510 Ballast water management requirements.
151.1511 Ballast water discharge standard (BWDS).
151.1512 Implementation schedule for approved ballast water management methods.
151.1513 Extension of compliance date.
151.1514 Vessel safety.
151.1515 Ballast water management alternatives under extraordinary conditions.
151.1515 Ballast water management alternatives under extraordinary conditions.
151.1516 Compliance monitoring.
151.1518 Penalties for failure to conduct ballast water management.

Subpart D—Ballast Water Management for Control of Nonindigenous Species in Waters of the United States

151.2000 Purpose and scope.
151.2005 Definitions.
151.2010 Applicability.
151.2013 Severability.
151.2015 Exemptions.
151.2020 Vessels in innocent passage.
151.2025 Ballast water management requirements.
151.2026 Alternate management systems.
151.2030 Ballast water discharge standard (BWDS).
151.2035 Implementation schedule for approved ballast water management methods.
151.2036 Extension of compliance date.
151.2040 Discharge of ballast water in extraordinary circumstances.
151.2050 Additional requirements—nonindigenous species reduction practices.
151.2055 Deviation from planned voyage.
151.2060 Reporting requirements.
151.2065 Equivalent reporting methods for vessels other than those entering the Great Lakes or Hudson River after operating outside the U.S. Exclusive Economic Zone or Canadian equivalent.
151.2070 Recordkeeping requirements.
151.2075 Enforcement and compliance.
151.2080 Penalties.

Subpart E—Definition of Marine Debris for the Purposes of the Marine Debris Research, Prevention, and Reduction Act

151.3000 Definition of marine debris for the purposes of the Marine Debris Research, Prevention, and Reduction Act.

AUTHORITY: 33 U.S.C. 1321, 1902, 1903, 1908; 46 U.S.C. 6101; Pub. L. 104–227 (110 Stat. 3034); Pub. L. 108–293 (118 Stat. 1063), § 623; E.O. 12777, 3 CFR, 1991 Comp. p. 351; DHS Delegation No. 0170.1, sec. 2(77).

Subpart A—Implementation of MARPOL 73/78 and the Protocol on Environmental Protection to the Antarctic Treaty as it Pertains to Pollution from Ships

AUTHORITY: 33 U.S.C. 1321, 1903, 1908; 46 U.S.C. 6101; Pub. L. 104–227 (110 Stat. 3034); E.O. 12777, 3 CFR, 1991 Comp. p. 351; Department of Homeland Security Delegation No. 170.1.

SOURCE: CGD 75–124a, 48 FR 45709, Oct. 6, 1983, unless otherwise noted.

GENERAL

§ 151.01 Purpose.

The purpose of this subpart is to implement the Act to Prevent Pollution from Ships, 1980, as amended (33 U.S.C. 1901–1911) and Annexes I, II and V of the International Convention for the Prevention of Pollution from Ships, 1973, as modified by the Protocol of 1978 relating thereto (MARPOL 73/78), done at London on February 17, 1978. This subpart also implements the Antarctic Science, Tourism, and Conservation Act of 1996, and the Protocol on Environmental Protection to the Antarctic Treaty done at Madrid on October 4, 1991.

[CGD 88–002, 54 FR 18403, Apr. 28, 1989, as amended by CGD 88–002A, 55 FR 18582, May 2, 1990; CGD 97–015, 62 FR 18045, Apr. 14, 1997; USCG–2000–7641, 66 FR 55570, Nov. 2, 2001]

§ 151.03 Applicability.

This subpart applies to each ship that must comply with Annex I, II or V of MARPOL 73/78 unless otherwise indicated.

[CGD 88–002, 54 FR 18403, Apr. 28, 1989, as amended by CGD 88–002A, 55 FR 18582, May 2, 1990; CGD 97–015, 62 FR 18045, Apr. 14, 1997]

§ 151.04 Penalties for violation.

(a) A person who violates MARPOL 73/78, the Act, or the regulations of this subpart is liable for a civil penalty for each violation, as provided by 33 U.S.C. 1908(b)(1). Each day of a continuing violation constitutes a separate violation.

(b) A person who makes a false, fictitious statement or fraudulent representation in any matter in which a statement or representation is required to

be made to the Coast Guard under MARPOL 73/78, the Act, or the regulations of this subpart, is liable for a civil penalty for each statement or representation, as provided by 33 U.S.C. 1908(b)(2).

(c) A person who knowingly violates MARPOL 73/78, the Act, or the regulations of this subpart commits a class D felony, as described in 18 U.S.C. 3551 *et seq*. In the discretion of the Court, an amount equal to not more than one-half of the fine may be paid to the person giving information leading to conviction.

(d) A ship operated in violation of MARPOL 73/78, the Act, or the regulations of this subpart is liable *in rem* for any civil penalty covered by paragraph (a) or (b) of this section, or any fine covered by paragraph (c) of this section, and may be proceeded against in the United States District Court of any district in which the ship may be found.

[CGD 88–002, 54 FR 18403, Apr. 28, 1989, as amended by CGD 88–002A, 55 FR 18582, May 2, 1990; CGD 92–007, 57 FR 33261, July 27, 1992; CGD 96–052, 62 FR 16703, Apr. 8, 1997; USCG–1999–5832, 64 FR 34714, June 29, 1999]

§ 151.05 Definitions.

As used in this subpart—

Act means the Act to Prevent Pollution from Ships, as amended (33 U.S.C. 1901–1911).

Antarctica means the area south of 60 degrees south latitude.

Captain of the Port (COTP) means the Coast Guard officer designated by the Commandant to command a COTP Zone as described in part 3 of this chapter.

Cargo residues means the remnants of any cargo which are not covered by other MARPOL Annexes and which remain on the deck or in holds following loading or unloading, including loading and unloading excess or spillage, whether in wet or dry condition or entrained in wash water, but does not include cargo dust remaining on the deck after sweeping or dust on the external surfaces of the ship.

Clean ballast means the ballast in a tank which, since oil was last carried therein, has been so cleaned that effluent therefrom, if it were discharged from a ship that is stationary into clean calm water on a clear day would not produce visible traces of oil on the surface of the water or adjoining shorelines or cause a sludge or emulsion to be deposited beneath the surface of the water or upon adjoining shorelines. If the ballast is discharged through an oil discharge monitoring and control system approved by the government of the country under whose authority the ship is operating, evidence based on such a system, to the effect that the oil content of the effluent does not exceed 15 parts per million (ppm) is determinative that the ballast is clean.

Commandant means Commandant, U.S. Coast Guard.

Cooking oil means any type of edible oil or animal fat used or intended to be used for the preparation or cooking of food, but does not include the food itself that is prepared using these oils.

Discharge means any release, however caused, from a ship and includes any escape, disposal, spilling, leaking, pumping, emitting or emptying. It does not include—

(1) Dumping within the meaning of the Convention on the Prevention of Marine Pollution by Dumping of Wastes and Other Matter, done at London on 13 November 1972; or

(2) Release of oil or oily mixtures directly arising from the exploration, exploitation and associated off-shore processing of sea-bed mineral resources.

Discharge, as defined by MARPOL in relation to harmful substances or effluent containing such substances, means any release however caused from a ship, and includes any escape, disposal, spilling, leaking, pumping, emitting or emptying. It does not include—

(1) Dumping within the meaning of the Convention on the Prevention of Marine Pollution by Dumping of Wastes and Other Matter, done at London on November 13, 1972; or

(2) The release of harmful substances directly arising from the exploration, exploitation, and associated offshore processing of seabed mineral resources; or

(3) The release of harmful substances for purposes of legitimate scientific research relating to pollution abatement or control.

Dishwater means the liquid residue from the manual or automatic washing of dishes and cooking utensils which have been pre-cleaned to the extent that any food particles adhering to them would not normally interfere with the operation of automatic dishwashers.

Domestic wastes means all types of wastes not covered by other MARPOL annexes that are generated in the accommodation spaces on board the ship. Domestic wastes do not include graywater.

En route means that the ship is underway at sea on a course or courses, including deviation from the shortest direct route, which as far as practicable for navigational purposes, will cause any discharge to be spread over as great an area of the sea as is reasonable and practicable.

Existing ship means a ship that is not a new ship.

Fishing gear means any physical device or part thereof or combination of items that may be placed on or in the water or on the sea-bed with the intended purpose of capturing, or controlling for subsequent capture or harvesting, marine or fresh water organisms.

Fixed or floating drilling rig or other platform means a fixed or floating structure located at sea which is engaged in the exploration, exploitation, or associated offshore processing of sea-bed mineral resources.

Food wastes means any spoiled or unspoiled food substances and includes fruits, vegetables, dairy products, poultry, meat products and food scraps generated aboard ship.

Fuel oil means any oil used to fuel the propulsion and auxiliary machinery of the ship carrying the fuel. The term ''fuel oil'' is also known as ''oil fuel.''

Garbage means all kinds of food wastes, domestic wastes and operational wastes, all plastics, cargo residues, cooking oil, fishing gear, and animal carcasses generated during the normal operation of the ship and liable to be disposed of continuously or periodically except those substances which are defined or listed in other Annexes to the present Convention. Garbage does not include fresh fish and parts thereof generated as a result of fishing activities undertaken during the voyage, or as a result of aquaculture activities which involve the transport of fish including shellfish for placement in the aquaculture facility and the transport of harvested fish including shellfish from such facilities to shore for processing.

Graywater means drainage from dishwater, shower, laundry, bath, and washbasin drains. It does not include drainage from toilets, urinals, hospitals, animal spaces, and cargo spaces.

Great Lakes means the Great Lakes of North America and the St. Lawrence River west of a rhumb line drawn from Cap des Rosiers to West Point, Anticosti Island, and, on the north side of Anticosti Island, the meridian of longitude 63 degrees west.

Harmful substance means any substance which, if introduced into the sea, is liable to create hazards to human health, harm living resources and marine life, damage amenities, or interfere with other legitimate uses of the sea, and includes any substance subject to control by MARPOL.

Harmful to the marine environment in relation to the discharge of:

(1) Cargo residues means residues of solid bulk substances which are classified according to the criteria of the United Nations Globally Harmonized System for Classification and Labeling of Chemicals (UN GHS) meeting the following parameters:

(i) Acute Aquatic Toxicity Category 1; and/or

(ii) Chronic Aquatic Toxicity Category 1 or 2; and/or

(iii) Carcinogenicity Category 1A or 1B combined with not being rapidly degradable and having high bioaccumulation; and/or

(iv) Mutagenicity Category 1A or 1B combined with not being rapidly degradable and having high bioaccumulation; and/or

(v) Reproductive Toxicity Category 1A or 1B combined with not being rapidly degradable and having high bioaccumulation; and/or

(vi) Specific Target Organ Toxicity Repeated Exposure Category 1 combined with not being rapidly degradable and having high bioaccumulation; and/or

(vii) Solid bulk cargoes containing or consisting of synthetic polymers, rubber, plastics, or plastic feedstock pellets (this includes materials that are shredded, milled, chopped, or macerated or similar materials).

(2) Cleaning agents or additives means a cleaning agent or additive that is:

(i) A ''harmful substance'' in accordance with the criteria in MARPOL Annex III; and/or

(ii) Contains any components which are known to be carcinogenic, mutagenic, or reprotoxic.

Notes to definition of *Harmful to the marine environment:*

1. These criteria are based on UN GHS, fourth revised edition (2011). For specific products (e.g., metals and inorganic metal compounds), guidance available in UN GHS, annexes 9 and 10 is essential for proper interpretation of the criteria and classification and should be followed.

2. These are products with a hazard statement classification for Carcinogenicity, Mutagenicity, Reproductive Toxicity, or Specific Target Organ Toxicity Repeated Exposure for oral hazards, dermal hazards, or without specification of the exposure route.

High viscosity Category B NLS means any Category B NLS having a viscosity of at least 25 mPa.s at 20 °C and at least 25 mPa.s at the time it is unloaded.

High viscosity Category C NLS means any Category C NLS having a viscosity of at least 60 mPa.s at 20 °C and at least 60 mPa.s at the time it is unloaded.

High viscosity NLS includes Category A NLSs having a viscosity of at least 25 mPa.s at 20 °C and at least 25 mPa.s at the time they are unloaded, high viscosity Category B NLSs, and high viscosity Category C NLSs.

Incinerator ashes means ash and clinkers resulting from shipboard incinerators used for the incineration of garbage.

Instantaneous rate of discharge of oil content means the rate of discharge of oil in liters per hour at any instant divided by the speed of the ship in knots at the same instant.

International Maritime Organization (IMO) guidelines means the guidelines for the Implementation of MARPOL Annex V (IMO Resolution MEPC.219(63), adopted March 2, 2012) and other garbage pollution related guidance approved or adopted by the IMO.

Length means the horizontal distance between the foremost part of a ship's stem to the aftermost part of its stern, excluding fittings and attachments.

Major conversion means a conversion of an existing ship—

(1) That substantially alters the dimensions or carrying capacity of the ship; or

(2) That changes the type of the ship; or

(3) The intent of which, in the opinion of the government of the country under whose authority the ship is operating, is substantially to prolong its life; or

(4) Which otherwise so alters the ship that, if it were a new ship, it would become subject to relevant provisions of MARPOL not applicable to it as an existing ship.

Marine pollutant means a harmful substance in packaged form, as it appears in Appendix B of 49 CFR 172.101.

MARPOL means the International Convention for the Prevention of Pollution from Ships, 1973, as modified by the Protocols of 1978 and 1997 relating to that Convention. A copy of MARPOL is available from the International Maritime Organization, 4 Albert Embankment, London, SE1, 7SR, United Kingdom.

Medical waste means isolation wastes, infectious agents, human blood and blood products, pathological wastes, sharps, body parts, contaminated bedding, surgical wastes and potentially contaminated laboratory wastes, dialysis wastes, and such additional medical items as prescribed by the Administrator of the EPA by regulation.

Navigable waters means the territorial sea of the United States (as defined in Presidential Proclamation 5928 of December 27, 1988) and the internal waters of the United States.

Nearest land. The term ''from the nearest land'' means from the baseline from which the territorial sea of the territory in question is established in

accordance with international law, except that, for the purposes of these regulations, ''from the nearest land'' off the northeastern coast of Australia shall mean from a line drawn from a point on the coast of Australia in—latitude 11°00′ South, longitude 142°08′ East to a point in—latitude 10°35′ South, longitude 141°55′ East, thence to a point—latitude 10°00′ South, longitude 142°00′ East, thence to a point—latitude 9°10′ South, longitude 143°52′ East, thence to a point—latitude 9°00′ South, longitude 144°30′ East, thence to a point—latitude 10°41′ South, longitude 145°00′ East, thence to a point—latitude 13°00′ South, longitude 145°00′ East, thence to a point—latitude 15°00′ South, longitude 146°00′ East, thence to a point—latitude 17°30′ South, longitude 147°00′ East, thence to a point—latitude 21°00′ South, longitude 152°55′ East, thence to a point on the coast of Australia in latitude 24°42′ South, longitude 153°15′ East.

New ship means a ship—

(1) For which the building contract is placed after December 31, 1975; or

(2) In the absence of a building contract, the keel of which is laid or which is at a similar stage of construction after June 30, 1976; or

(3) The delivery of which is after December 31, 1979; or

(4) That has undergone a major conversion—

(i) For which the contract is placed after December 31, 1975;

(ii) In the absence of a contract, the construction work of which is begun after June 30, 1976; or

(iii) That is completed after December 31, 1979.

(5) For the purposes of §§151.26 through 151.28, which is delivered on or after April 4, 1993.

NLS means Noxious Liquid Substance.

NLS Certificate means an International Pollution Prevention Certificate for the Carriage of Noxious Liquid Substances in Bulk issued under MARPOL.

Noxious liquid substance (NLS) means—

(1) Each substance listed in §151.47 or §151.49;

(2) Each substance having an ''A'', ''B'', ''C'', or ''D'' beside it's name in the column headed ''Pollution Category'' in Table 1 of 46 CFR Part 153; and

(3) Each substance that is identified as an NLS in a written permission issued under 46 CFR 153.900 (d).

Oceangoing ship means a ship that—

(1) Is operated under the authority of the United States and engages in international voyages;

(2) Is operated under the authority of the United States and is certificated for ocean service;

(3) Is operated under the authority of the United States and is certificated for coastwise service beyond three miles from land;

(4) Is operated under the authority of the United States and operates at any time seaward of the outermost boundary of the territorial sea of the United States as defined in §2.22 of this chapter; or

(5) Is operated under the authority of a country other than the United States.

NOTE: A Canadian or U.S. ship being operated exclusively on the Great Lakes of North America or their connecting and tributary waters, or exclusively on the internal waters of the United States and Canada; is not an ''oceangoing'' ship.

Oil means petroleum whether in solid, semi-solid, emulsified, or liquid form, including but not limited to, crude oil, fuel oil, sludge, oil refuse, oil residue, and refined products, and, without limiting the generality of the foregoing, includes the substances listed in Appendix I of Annex I of MARPOL. ''Oil'' does not include animal and vegetable based oil or noxious liquid substances (NLS) designated under Annex II of MARPOL.

Oil cargo residue means any residue of oil cargo whether in solid, semi-solid, emulsified, or liquid form from cargo tanks and cargo pump room bilges, including but not limited to, drainages, leakages, exhausted oil, muck, clingage, sludge, bottoms, paraffin (wax), and any constituent component of oil. The term ''oil cargo residue'' is also known as ''cargo oil residue.''

Oil residue means—

(1) Oil cargo residue; and

(2) Other residue of oil whether in solid, semi-solid, emulsified, or liquid

form, resulting from drainages, leakages, exhausted oil, and other similar occurrences from machinery spaces.

Oily mixture means a mixture, in any form, with any oil content. ''Oily mixture'' includes, but is not limited to—

(1) Slops from bilges;

(2) Slops from oil cargoes (such as cargo tank washings, oily waste, and oily refuse);

(3) Oil residue (sludge); and

(4) Oily ballast water from cargo or fuel oil tanks.

Oil-like NLS means each cargo listed in § 151.49.

Oil tanker means a ship constructed or adapted primarily to carry oil in bulk in its cargo spaces and includes combination carriers and any ''chemical tanker'' as defined in Annex II of MARPOL when it is carrying a cargo or part cargo of oil in bulk.

Operational wastes means all solid wastes (including slurries) not covered by other MARPOL Annexes that are collected on board during normal maintenance or operations of a ship, or used for cargo stowage and handling. Operational wastes also include cleaning agents and additives contained in cargo hold and external wash water. Operational wastes does not include discharges essential to the operation of a ship, including but not limited to graywater, bilge water, ballast water, controllable pitch propeller and thruster hydraulic fluid and other oil to sea interfaces (e.g., thruster bearings, stabilizers, rudder bearings, etc.), deck washdown and runoff and above water line hull cleaning (not harmful to the marine environment), firemain systems water, gas turbine wash water, and/or non-oily machinery wastewater.

Person means an individual, firm, public or private corporation, partnership, association, State, municipality, commission, political subdivision of a State, or any interstate body.

Plastic means a solid material, which contains as an essential ingredient one or more high molecular mass polymers, and which is formed (shaped) during either the manufacture of the polymer or the fabrication into a finished product by heat and/or pressure. Plastics have material properties ranging from hard and brittle to soft and elastic. For the purposes of these regulations, ''all plastics'' means all garbage that consists of or includes plastic in any form, including synthetic ropes, synthetic fishing nets, plastic garbage bags and incinerator ashes from plastic products.

Port means—

(1) A group of terminals that combines to act as a unit and be considered a port for the purposes of this subpart;

(2) A port authority or other organization that chooses to be considered a port for the purposes of this subpart; or

(3) A place or facility that has been specifically designated as a port by the COTP.

Prewash means a tank washing operation that meets the procedure in 46 CFR 153.1120.

Recognized Classification Society means a classification society that is a participating member of the International Association of Classification Societies (IACS).

Recycling means the activity of segregating and recovering components and materials for reprocessing.

Residues and mixtures containing NLSs (NLS residue) means—

(1) Any Category A, B, C, or D NLS cargo retained on the ship because it fails to meet consignee specifications;

(2) Any part of a Category A, B, C, or D NLS cargo remaining on the ship after the NLS is discharged to the consignee, including but not limited to puddles on the tank bottom and in sumps, clingage in the tanks, and substance remaining in the pipes; or

(3) Any material contaminated with Category A, B, C, or D NLS cargo, including but not limited to bilge slops, ballast, hose drip pan contents, and tank wash water.

Segregated ballast means the ballast water introduced into a tank that is completely separated from the cargo oil and fuel oil system and that is permanently allocated to the carriage of ballast or to the carriage of ballast or cargoes other than oil or noxious substances as variously defined in the Annexes of MARPOL.

Ship means a vessel of any type whatsoever, operating in the marine environment. This includes hydrofoils, air-cushion vehicles, submersibles, floating craft whether self-propelled or not, and fixed or floating drilling rigs and other platforms.

Shipboard oil pollution emergency plan means a plan prepared, submitted, and maintained according to the provisions of §§151.26 through 151.28 of this subpart for United States ships or maintained according to the provisions of §151.29(a) of this subpart for foreign ships operated under the authority of a country that is party to MARPOL or carried on board foreign ships operated under the authority of a country that is not a party to MARPOL, while in the navigable waters of the United States, as evidence of compliance with §151.21 of this subpart.

Solidifying NLS means a Category A, B, or C NLS that has a melting point—

(1) Greater than 0 °C but less than 15 °C and a temperature, measured under the procedure in 46 CFR 153.908(d), that is less than 5 °C above its melting point at the time it is unloaded; or

(2) 15 °C or greater and a temperature, measured under the procedure in 46 CFR 153.908(d), that is less than 10 °C above its melting point at the time it is unloaded.

Special area means a sea area, where for recognized technical reasons in relation to its oceanographical and ecological condition and to the particular character of the traffic, the adoption of special mandatory methods for the prevention of sea pollution by oil, NLSs, or garbage is required.

Terminal means an onshore facility or an offshore structure located in the navigable waters of the United States or subject to the jurisdiction of the United States and used, or intended to be used, as a port or facility for the transfer or other handling of a harmful substance.

NOTE: The Coast Guard interprets commercial fishing facilities, recreational boating facilities, and mineral and oil industry shorebases to be terminals for the purposes of Annex V of MARPOL, since these facilities normally provide wharfage and other services, including garbage handling, for ships.

U.S. inspected ships means those ship required to be inspected and certificated under 46 CFR 2.01–7.

[CGD 75–124a, 48 FR 45709, Oct. 6, 1983; 48 FR 54977, Dec. 8, 1983]

EDITORIAL NOTE: For FEDERAL REGISTER citations affecting §151.05, see the List of CFR Sections Affected, which appears in the Finding Aids section of the printed volume and at www.fdsys.gov.

§ 151.06 Special areas.

(a) For the purposes of this part, the navigational descriptions of the special areas are as follows:

(1) The Mediterranean Sea area means the Mediterranean Sea proper including the gulfs and seas therein, with the boundary between the Mediterranean and the Black Sea constituted by the 41° N parallel and bounded to the west by the Straits of Gibraltar at the meridian of 5°36′ W.

(2) The Baltic Sea means the Baltic Sea proper with the Gulf of Bothnia, the Gulf of Finland, and the entrance to the Baltic Sea bounded by the parallel of the Skaw in the Skagerrak at 57°44.8′ N.

(3) The Black Sea area means the Black Sea proper with the boundary between the Mediterranean Sea and the Black Sea constituted by the parallel 41° N.

(4) The Red Sea area means the Red Sea proper including the Gulfs of Suez and Aqaba bounded at the south by the rhumb line between Ras si Ane (12°8.5′ N, 43°19.6′ E) and Husn Murad (12°40.4′ N, 43°30.2′ E).

(5) The Gulfs areas means the sea area located northwest of the rhumb line between Ras al Hadd (22°30′ N, 59°48′ E) and Ras al Fasteh (25°04′ N, 61°25′ E).

(6) The Gulf of Aden areas means the part of the Gulf of Aden between the Red Sea and the Arabian Sea bounded to the west by the rhumb line between Ras si Ane (12°28.5′ N, 43°19.6′ E) and Husn Murad (12°40.4′ N, 43°30.2′ E) and to the east by the rhumb line between Ras Asir (11°50′ N, 51°16.9′ E) and the Ras Fartak (15°35′ N, 52°13.8′ E).

(7) The Antarctic areas means the sea south of 60° south latitude.

(8) *The North West European waters* mean the North Sea and its approaches, the Irish Sea and its approaches, the Celtic Sea, the English Channel and its approaches and part of the North East Atlantic immediately to the west of Ireland. The area is bounded by lines joining the following points:

48°27′ N on the French coast
48°27′ N; 006°25′ W

49°52′ N; 007°44′ W
50°30′ N; 012° W
56°30′ N; 012° W
62° N; 003° W
62°′ N on the Norwegian coast
57°44′.8 N on the Danish and Swedish coasts.

(9) *The Oman area of the Arabian Sea* means the sea enclosed by the following co-ordinates:

22°30′.00 N; 059°48′.00 E
23°47′.27 N; 060°35′.73 E
22°40′.62 N; 062°25′.29 E
21°47′.40 N; 063°22′.22 E
20°30′.37 N; 062°52′.41 E
19°45′.90 N; 062°25′.97 E
18°49′.92 N; 062°02′.94 E
17°44′.36 N; 061°05′.53 E
16°43′.71 N; 060°25′.62 E
16°03′.90 N; 059°32′.24 E
15°15′.20 N; 058°58′.52 E
14°36′.93 N; 058°10′.23 E
14°18′.93 N; 057°27′.03 E
14°11′.53 N; 056°53′.75 E
13°53′.80 N; 056°19′.24 E
13°45′.86 N; 055°54′.53 E
14°27′.38 N; 054°51′.42 E
14°40′.10 N; 054°27′.35 E
14°46′.21 N; 054°08′.56 E
15°20′.74 N; 053°38′.33 E
15°48′.69 N; 053°32′.07 E
16°23′.02 N; 053°14′.82 E

(10) *The Southern South African waters* means the sea area enclosed by the following co-ordinates:

31°14′ S; 017°50′ E
31°30′ S; 017°12′ E
32°00′ S; 017°06′ E
32°32′ S; 016°52′ E
34°06′ S; 017°24′ E
36°58′ S; 020°54′ E
36°00′ S; 022°30′ E
35°14′ S; 022°54′ E
34°30′ S; 026°00′ E
33°48′ S; 027°25′ E
33°27′ S; 027°12′ E

(11) *The North Sea area* means the North Sea proper, including seas within the North Sea southwards of latitude 62° N and eastwards of longitude 4° W; the Skagerrak, the southern limit of which is determined east of the Skaw by latitude 57°44.8′ N; and the English Channel and its approaches eastwards of longitude 5° W.

(12) *The Wider Caribbean region* means the Gulf of Mexico and Caribbean Sea proper, including the bays and seas therein and that portion of the Atlantic Ocean within the boundary constituted by the 30° N parallel from Florida eastward to 77°30′ W meridian, thence a rhumb line to the intersection of 20° N parallel and 59° W meridian, thence a rhumb line to the intersection of 7°20′ N parallel and 50° W meridian, thence a rhumb line drawn southwesterly to the eastern boundary of French Guiana.

(b) Special areas for the purpose of Annex I of MARPOL 73/78 include those referenced in § 151.13. Special areas for the purposes of Annex II of MARPOL 73/78 include those referenced in § 151.32. Special areas for the purpose of Annex V of MARPOL 73/78 include those referenced in § 151.53.

[CGD 94–056, 60 FR 43377, Aug. 21, 1995, as amended by USCG–2008–0179, 73 FR 35013, June 19, 2008]

§ 151.07 Delegations.

Each Coast Guard official designated as a Captain of the Port (COTP) or Officer in Charge, Marine Inspection (OCMI) or Commanding Officer, Sector Office, is delegated the authority to—

(a) Issue International Oil Pollution Prevention (IOPP) Certificates;

(b) Detain or deny entry to ships not in substantial compliance with MARPOL 73/78 or not having an IOPP Certificate or evidence of compliance with MARPOL 73/78 on board;

(c) Receive and investigate reports under § 151.15; and

(d) Issue subpoenas to require the attendance of any witness and the production of documents and other evidence, in the course of investigations of potential violations of the Act to Prevent Pollution from Ships, as amended (33 U.S.C. 1901–1911), this subpart, or MARPOL 73/78.

[CGD 88–002, 54 FR 18404, Apr. 28, 1989, as amended by CGD 88–002A, 55 FR 18582, May 2, 1990; USCG–2006–25556, 72 FR 36328, July 2, 2007]

§ 151.08 Denial of entry.

(a) Unless a ship is entering under force majeure, no oceangoing tanker or any other oceangoing ship of 400 gross tons or more required by § 151.10 to retain oil, oil residue, or oily mixtures on board while at sea, and no oceangoing ship carrying a Category A, B, or C

NLS cargo or NLS residue in cargo tanks that are required to be prewashed under 46 CFR Part 153, may enter any port or terminal under § 158.110(a) of this chapter unless the port or terminal has a Certificate of Adequacy, as defined in § 158.120 of this chapter.

(b) A COTP may deny the entry of a ship to a port or terminal under § 158.110(b) if—

(1) The port or terminal does not have a Certificate of Adequacy, as required in § 158.135 of this chapter; or

(2) The port or terminal is not in compliance with the requirements of subpart D of part 158.

[CGD 88–002, 54 FR 18404, Apr. 28, 1989, as amended by USCG–2000–7641, 66 FR 55570, Nov. 2, 2001]

OIL POLLUTION

SOURCE: Sections 151.09 through 151.25 appear by CGD 75–124a, 48 FR 45709, Oct. 6, 1983, unless otherwise noted.

§ 151.09 Applicability.

(a) Except as provided in paragraph (b) of this section, §§ 151.09 through 151.25 apply to each ship that—

(1) Is operated under the authority of the United States and engages in international voyages;

(2) Is operated under the authority of the United States and is certificated for ocean service;

(3) Is operated under the authority of the United States and is certificated for coastwise service beyond three nautical miles from land;

(4) Is operated under the authority of the United States and operates at any time seaward of the outermost boundary of the territorial sea of the United States as defined in § 2.22(a)(2) of this chapter; or

(5) Is operated under the authority of a country other than the United States while in the navigable waters of the United States, or while at a port or terminal under the jurisdiction of the United States.

(b) Sections 151.09 through 151.25 do not apply to—

(1) A warship, naval auxiliary, or other ship owned or operated by a country when engaged in noncommercial service;

(2) A Canadian or U.S. ship being operated exclusively on the Great Lakes of North America or their connecting and tributary waters;

(3) A Canadian or U.S. ship being operated exclusively on the internal waters of the United States and Canada; or

(4) Any other ship specifically excluded by MARPOL 73/78.

NOTE TO § 151.09(b): The term ''internal waters'' is defined in § 2.24 of this chapter.

(c) Sections 151.26 through 151.28 apply to each United States oceangoing ship specified in paragraphs (a)(1) through (a)(4) of this section which is—

(1) An oil tanker of 150 gross tons and above or other ship of 400 gross tons and above; or

(2) A fixed or floating drilling rig or other platform, when not engaged in the exploration, exploitation, or associated offshore processing of seabed mineral resources.

(d) The requirements of §§ 151.26 through 151.28—

(1) Do not apply to—

(i) The ships specified in paragraph (b) of this section; and

(ii) Any barge or other ship, which is constructed or operated in such a manner that no oil in any form can be carried aboard.

(2) Are considered to be met if a U.S.-flag vessel holds a USCG-approved vessel response plan and provides evidence of compliance with 33 CFR part 155, subpart D or J requirements.

(e) Section 151.26(b)(5) applies to all vessels subject to the jurisdiction of the United States and operating in Antarctica.

[CGD 88–002, 54 FR 18404, Apr. 28, 1989, as amended by CGD 88–002A, 55 FR 18582, May 2, 1990; CGD 93–030, 59 FR 51338, Oct. 7, 1994; CGD 97–015, 62 FR 18045, Apr. 14, 1997; USCG–2006–25150, 71 FR 39209, July 12, 2006; USCG–2007–27887, 72 FR 45904, Aug. 16, 2007; USCG–2008–0179, 73 FR 35013, June 19, 2008; USCG–2008–1070, 78 FR 60120, Sept. 30, 2013]

§ 151.10 Control of oil discharges.

(a) When more than 12 nautical miles from the nearest land, any discharge of oil or oily mixtures into the sea from a ship other than an oil tanker or from machinery space bilges of an oil tanker is prohibited except when all of the following conditions are satisfied—

(1) The oil or oily mixture does not originate from cargo pump room bilges;

(2) The oil or oily mixture is not mixed with oil cargo residues;

(3) The ship is not within a special area;

(4) The ship is proceeding enroute;

(5) The oil content of the effluent without dilution is less than 15 parts per million (ppm); and

(6) The ship has in operation oily-water separating equipment, a bilge monitor, bilge alarm, or combination thereof as required by part 155 subpart B of this chapter.

(b) When within 12 nautical miles of the nearest land, any discharge of oil or oily mixtures into the sea from a ship other than an oil tanker or from machinery space bilges of an oil tanker is prohibited except when all of the following conditions are satisfied—

(1) The oil or oily mixture does not originate from cargo pump room bilges;

(2) The oil or oily mixture is not mixed with oil cargo residues;

(3) The oil content of the effluent without dilution does not exceed 15 ppm;

(4) The ship has in operation oily-water separating equipment, a bilge monitor, bilge alarm, or combination thereof as required by part 155 subpart B of this chapter; and

(5) The oily-water separating equipment is equipped with a 15 ppm bilge alarm; for U.S. inspected ships, approved under 46 CFR 162.050 and for U.S. uninspected ships and foreign ships, either approved under 46 CFR 162.050 or listed in the current International Maritime Organization (IMO) Marine Environment Protection Committee (MEPC) Circular summary of MARPOL 73/78 approved equipment.

NOTE: In the navigable waters of the United States, the Federal Water Pollution Control Act (FWPCA), section 311(b)(3) and 40 CFR Part 110 govern all discharges of oil or oily-mixtures.

(c) The overboard discharge of any oil cargo residues and oily mixtures that include oil cargo residues from an oil tanker is prohibited, unless discharged in compliance with part 157 of this chapter.

(d) When more than 12 nautical miles from the nearest land, any discharge of oil or oily mixtures into the sea from a ship other than an oil tanker or from machinery space bilges of an oil tanker; that is not proceeding enroute; shall be in accordance with paragraphs (b)(1), (b)(2), (b)(3), (b)(4), and (b)(5) of this section.

(e) The provisions of paragraphs (a), (b), (c) and (d) of this section do not apply to the discharge of clean or segregated ballast.

(f) The person in charge of an oceangoing ship that cannot discharge oily mixtures into the sea in compliance with paragraphs (a), (b), (c), or (d) of this section must ensure that those oily mixtures are—

(1) Retained on board; or

(2) Discharged to a reception facility. If the reception facility is in a port or terminal in the United States, each person who is in charge of each oceangoing tanker or any other oceangoing ship of 400 gross tons or more shall notify the port or terminal, at least 24 hours before entering the port or terminal, of—

(i) The estimated time of day the ship will discharge oily mixtures;

(ii) The type of oily mixtures to be discharged; and

(iii) The volume of oily mixtures to be discharged.

NOTE: There are Federal, state, or local laws or regulations that could require a written description of the oil residues and oily mixtures to be discharged. For example, a residue or mixture containing oil might have a flashpoint less than 60 °C (140 °F) and thus have the characteristic of ignitability under 40 CFR 261.21, which might require a description of the waste for a manifest under 40 CFR Part 262, subpart B. Occupational safety and health concerns may be covered, as well as environmental ones.

The notice required in this section is in addition to those required by other Federal, state, and local laws and regulations. Affected persons should contact the appropriate Federal, state, or local agency to determine whether other notice and information requirements, including 40 CFR Parts 262 and 263, apply to them.

(g) No discharge into the sea shall contain chemicals or other substances introduced for the purpose of circumventing the conditions of discharge specified in this regulation.

(h) This section does not apply to a fixed or floating drilling rig or other

platform that is operating under a National Pollutant Discharge Elimination System (NPDES) permit.

[CGD 75–124a, 48 FR 45709, Oct. 6, 1983, as amended by CGD 78–035, 50 FR 36793, Sept. 9, 1985. Redesignated by CGD 88–002, 54 FR 18404, Apr. 28, 1989; USCG–1998–3799, 63 FR 35530, June 30, 1998; USCG–2000–7641, 66 FR 55571, Nov. 2, 2001]

§ 151.11 Exceptions for emergencies.

(a) Sections 151.10 and 151.13 do not apply to—

(1) The discharge into the sea of oil or oily mixture necessary for the purpose of securing the safety of a ship or saving life at sea.

(2) The discharge into the sea of oil or oily mixture resulting from damage to a ship or its equipment—

(i) Provided that all reasonable precautions have been taken after the occurrence of the damage or discovery of the discharge for the purpose of preventing or minimizing the discharge; and

(ii) Except if the owner or the master acted either with intent to cause damage, or recklessly and with knowledge that damage would probably result.

(b) [Reserved]

[CGD 75–134a, 48 FR 45709, Oct. 6, 1983, as amended by CGD 88–002, 54 FR 18404, Apr. 28, 1989]

§ 151.13 Special areas for Annex I of MARPOL 73/78.

(a) For the purposes of §§ 151.09 through 151.25, the special areas are the Mediterranean Sea area, the Baltic Sea area, the Black Sea area, the Red Sea area, the Gulfs area, the Gulf of Aden, and the Antarctic area, the North West European waters, and Oman area of the Arabian Sea which are described in § 151.06. The discharge restrictions are effective in the Mediterranean Sea, Baltic Sea, Black Sea, and the Antarctic area.

(b) Subject to the provisions of § 151.11—

(1) A ship of 400 gross tons or over and any oil tanker may not discharge oil or oily mixture within a special area. In the Antarctic area, discharge into the sea of oil or oily mixture from any ship is prohibited.

(2) A ship of less than 400 gross tons other than an oil tanker may not discharge oil or oily mixture within a special area, unless the oil content of the effluent without dilution does not exceed 15 parts per million (ppm).

(3) All ships operating in the Antarctic area must have on board a tank or tanks of sufficient capacity to retain all oily mixtures while operating in the area and arrangements made to discharge oily mixtures at a reception facility outside the Antarctic area.

(c) The provisions of paragraph (b) of this section do not apply to the discharge of clean or segregated ballast.

(d) The provisions of paragraph (b)(1) of this section do not apply to the discharge of processed bilge water from machinery space bilges, provided that all of the following conditions are satisfied—

(1) The bilge water does not originate from cargo pump room bilges;

(2) The bilge water is not mixed with oil cargo residues;

(3) The ship is proceeding enroute;

(4) The oil content of the effluent without dilution does not exceed 15 ppm;

(5) The ship has in operation oily-water separating equipment complying with part 155 of this chapter; and

(6) The oily-water separating equipment is equipped with a device that stops the discharge automatically when the oil content of the effluent exceeds 15 ppm.

(e) No discharge into the sea shall contain chemicals or other substances introduced for the purpose of circumventing the conditions of discharge specified in this section.

(f) The oily mixtures that cannot be discharged into the sea in compliance with paragraphs (b), (c), or (d) of this section shall be retained on board or discharged to reception facilities.

(g) Nothing in this section prohibits a ship on a voyage, only part of which is in a special area, from discharging outside the special area in accordance with § 151.10.

(h) In accordance with Regulation 38.6.1 of Annex I of MARPOL 73/78, the discharge restriction in § 151.13 for the Red Sea area, Gulfs area, Gulf of Aden area, the Oman area of the Arabian Sea, and the Southern South African waters will enter into effect when each party to MARPOL 73/78 whose coastline

borders the special area has certified that reception facilities are available and the IMO has established an effective date for each special area. Notice of the effective dates for the discharge requirements in these special areas will be published in the FEDERAL REGISTER and reflected in this section.

[CGD 75–124a, 48 FR 45709, Oct. 6, 1983; 48 FR 54977, Dec. 8, 1983, as amended by CGD 88–002, 54 FR 18404, Apr. 28, 1989; CGD 88–002A, 55 FR 18582, May 2, 1990; CGD 94–056, 60 FR 43377, Aug. 21, 1995; USCG–2000–7641, 66 FR 55571, Nov. 2, 2001; USCG–2008–0179, 73 FR 35013, June 19, 2008]

§ 151.15 Reporting requirements.

(a) The master, person in charge, owner, charterer, manager, or operator of a vessel involved in any incident described in paragraph (c) of this section must report the particulars of the incident without delay to the fullest extent possible under the provisions of this section.

(b) If a vessel involved in an incident is abandoned, or if a report from that vessel is incomplete or unattainable, the owner, charterer, manager, operator, or their agent must assume the obligations placed upon the master or other person having charge of the vessel under provisions of this section.

(c) The report must be made whenever an incident involves—

(1) A discharge of oil, hazardous substances, marine pollutants, or noxious liquid substances (NLS) resulting from damage to the vessel or its equipment, or for the purpose of securing the safety of a vessel or saving a life at sea;

(2) A discharge of oil in excess of the quantities or instantaneous rate permitted in §§ 151.10 or 151.13 of this chapter, or NLS in bulk, in 46 CFR 153.1126 or 153.1128, during the operation of the vessel;

(3) A discharge of marine pollutants in packaged form; or

(4) A probable discharge resulting from damage to the vessel or its equipment. The factors you must consider to determine whether a discharge is probable include, but are not limited to—

(i) Ship location and proximity to land or other navigational hazards;

(ii) Weather;

(iii) Tide current;

(iv) Sea state;

(v) Traffic density;

(vi) The nature of damage to the vessel; and

(vii) Failure or breakdown aboard the vessel of its machinery or equipment. Such damage may be caused by collision, grounding, fire, explosion, structural failure, flooding or cargo shifting or a failure or breakdown of steering gear, propulsion, electrical generating system or essential shipboard navigational aids.

(d) Each report must be made by radio whenever possible, or by the fastest telecommunications channels available with the highest possible priority at the time the report is made to—

(1) The appropriate officer or agency of the government of the country in whose waters the incident occurs; and

(2) The nearest Captain of the Port (COTP) or the National Response Center (NRC), toll free number 800–424–8802 (in Washington, DC, metropolitan area, 202–267–2675), fax 202–267–1322, telex number 892427 for incidents involving U.S. vessels in any body of water; or incidents involving foreign flag vessels in the navigable waters of the United States; or incidents involving foreign-flag tank vessels within waters subject to the jurisdiction of the United States, including the Exclusive Economic Zone (EEZ).

(e) Each report must contain—

(1) The identity of the ship;

(2) The type of harmful substance involved;

(3) The time and date of the incident;

(4) The geographic position of the vessel when the incident occurred;

(5) The wind and the sea condition prevailing at the time of the incident;

(6) Relevant details respecting the condition of the vessel;

(7) A statement or estimate of the quantity of the harmful substance discharged or likely to be discharged into the sea; and

(8) Assistance and salvage measures.

(f) A person who is obligated under the provisions of this section to send a report must—

(1) Supplement the initial report, as necessary, with information concerning further developments; and

(2) Comply as fully as possible with requests from affected countries for additional information concerning the incident.

(g) A report made under this section satisfies the reporting requirements of § 153.203 of this chapter and of 46 CFR 4.05–1 and 4.05–2, if required under those provisions.

[USCG–2000–6927, 70 FR 74675, Dec. 16, 2005, as amended by USCG–2006–25150, 71 FR 39209, July 12, 2006; USCG–2008–0179, 73 FR 35014, June 19, 2008]

§ 151.17 Surveys.

(a) Every U.S. oil tanker of 150 gross tons and above, and every other U.S. ship of 400 gross tons and above; that is required to have an International Oil Pollution Prevention (IOPP) Certificate on board and to which this part applies, except as provided for in paragraphs (b) and (d) of this section; is subject to the following surveys conducted by the Coast Guard—

(1) An initial survey, conducted before the ship is put in service or before an IOPP Certificate required under § 151.19 is issued for the first time; this survey includes a complete examination of its structure, equipment, systems, fittings, arrangements and material in so far as the ship is covered by this chapter.

(2) Periodic renewal surveys conducted at intervals corresponding with the renewal of the IOPP Certificates. The purpose of the survey is to determine whether the structure, equipment, systems, fittings, arrangements, and material comply with the requirements of parts 155 and 157 of this chapter.

(3) Annual surveys for inspected ships conducted as close as practicable to twelve (12) and thirty-six (36) months from the date of issuance of the IOPP Certificate, and not more than two months prior to or later than these twelve and thirty-six month dates; this survey is to determine that the oily-water separating equipment and associated pumps and piping systems remain satisfactory for the service intended, and that no unauthorized alterations have been made, and is to be endorsed on the IOPP Certificate.

(4) Intermediate surveys for inspected ships conducted as close as practicable to twenty-four (24) months from the date of issuance of the IOPP Certificates, and not more than six months prior to or later than that twenty-four month date; this survey is to determine whether the equipment and associated pump and piping systems, including oil discharge monitoring and control systems, and oily-water separating equipment comply with the requirements of parts 155 and 157 of this chapter, and are in good working order, and is to be endorsed on the IOPP Certificate.

(5) Intermediate surveys for uninspected ships conducted as close as practicable to thirty (30) months from the date of issuance of the IOPP Certificate, and not more than six months prior to or later than that thirty month date; this survey is to determine whether the equipment and associated pump and piping systems, including oil discharge monitoring and control systems, and oily-water separating equipment comply with the requirements of parts 155 and 157 of this chapter, and are in good working order, and is to be endorsed on the IOPP Certificate.

(b) Every U.S. inspected oil tanker of 150 gross tons and above, and every other U.S. inspected ship of 400 gross tons and above; that is not required to have an IOPP Certificate on board is subject to the following surveys to be conducted by the Coast Guard—

(1) An initial survey conducted before the ship is put into service.

(2) All other surveys are conducted concurrently with either inspections for certification or required reinspections.

(c) After any survey of a ship under this section has been completed, no significant change may be made in the construction, equipment, fittings, arrangements or material covered by the survey without the sanction of the COTP or OCMI except for the direct replacement of such equipment or fittings.

(d) Fixed and floating drilling rigs and other platforms, barges, and uninspected ships; that are not required to have an IOPP Certificate on

board are not required to be surveyed under this section.

[CGD 75–124a, 48 FR 45709, Oct. 6, 1983, as amended by USCG–1998–3799, 63 FR 35530, June 30, 1998]

§ 151.19 International Oil Pollution Prevention (IOPP) Certificates.

(a) Each U.S. oil tanker of 150 gross tons and above and each other U.S. ship of 400 gross tons and above; that engages in voyages to ports or off-shore terminals under the jurisdiction of other parties to MARPOL 73/78 must have on board a valid International Oil Pollution Prevention (IOPP) Certificate.

(b) Each oil tanker of 150 gross tons and above and each other ship of 400 gross tons and above, operated under the authority of a country other than the United States that is party to MARPOL 73/78, must have on board a valid IOPP Certificate.

(c) An IOPP Certificate is issued by a COTP, OCMI, or a classification society authorized under 46 CFR part 8, after a satisfactory survey in accordance with the provisions of § 151.17.

(d) The Supplement to the IOPP Certificate is a part of the IOPP Certificate and must remain attached to that Certificate. If the Supplement to the Certificate is changed, a new IOPP Certificate will be required.

(e) The IOPP Certificate for each inspected or uninspected ship is valid for a maximum period of 5 years from the date of issue, except as follows:

(1) A Certificate ceases to be valid if significant alterations have taken place in the construction, equipment, fittings, or arrangements required by the pollution prevention requirements of parts 155 or 157 of this chapter without the approval of the COTP or the OCMI.

(2) A Certificate ceases to be valid if intermediate surveys as required by § 151.17 of this part are not carried out.

(3) A Certificate issued to a ship ceases to be valid upon transfer of the ship to the flag of another country.

(Approved by the Office of Management and Budget under control number 1625–0041)

[CGD 75–124a, 48 FR 45709, Oct. 6, 1983, as amended by CGD 95–010, 62 FR 67531, Dec. 24, 1997; USCG–1998–3799, 63 FR 35530, June 30, 1998; USCG–2000–7223, 65 FR 40057, June 29, 2000; USCG–2000–7641, 66 FR 55571, Nov. 2, 2001; USCG–2006–25150, 71 FR 39209, July 12, 2006]

§ 151.21 Ships of countries not party to MARPOL 73/78.

(a) Each oil tanker of 150 gross tons and above and each other ship of 400 gross tons and above, operated under the authority of a country not a party to MARPOL 73/78, must have on board valid documentation showing that the ship has been surveyed in accordance with and complies with the requirements of MARPOL 73/78. Evidence of compliance may be issued by either the government of a country that is party to MARPOL 73/78 or a recognized classification society.

(b) Evidence of compliance must contain all of the information in, and have substantially the same format as, the IOPP Certificate.

(Approved by the Office of Management and Budget under control number 1625–0019)

[CGD 75–124a, 48 FR 45709, Oct. 6, 1983, as amended by CGD 93–030, 59 FR 51338, Oct. 7, 1994; USCG–2006–25150, 71 FR 39209, July 12, 2006]

§ 151.23 Inspection for compliance and enforcement.

(a) While at a port or terminal under the jurisdiction of the United States, a ship is subject to inspection by the Coast Guard—

(1) To determine that a valid IOPP Certificate is on board and that the condition of the ship and its equipment corresponds substantially with the particulars of the IOPP Certificate;

(2) To determine that evidence of compliance with MARPOL 73/78, as required by § 151.21 is on board and that the condition of the ship and its equipment corresponds substantially with the particulars of this evidence of compliance;

(3) To determine whether a ship has been operating in accordance with and

has not discharged any oil or oily mixtures in violation of the provisions of MARPOL 73/78 or this subchapter;

(4) To determine whether a ship has discharged oil or oily mixtures anywhere in violation of MARPOL 73/78, upon request from a party to MARPOL 73/78 for an investigation when the requesting party has furnished sufficient evidence to support a reasonable belief that a discharge has occurred.

(b) A ship that does not comply with the requirements of parts 151, 155 and 157 of this chapter, or where the condition of the ship or its equipment does not substantially agree with the particulars of the IOPP Certificate or other required documentation, may be detained by order of the COTP or OCMI, at the port or terminal where the violation is discovered until, in the opinion of the detaining authority, the ship can proceed to sea without presenting an unreasonable threat of harm to the marine environment. The detention order may authorize the ship to proceed to the nearest appropriate available shipyard rather than remaining at the place where the violation was discovered.

(c) An inspection under this section may include an examination of the Oil Record Book, the oil content meter continuous records, and a general examination of the ship. A copy of any entry in the Oil Record Book may be made and the Master of the ship may be required to certify that the copy is a true copy of such entry.

[CGD 75–124a, 48 FR 45709, Oct. 6, 1983, as amended by CGD 88–002A, 55 FR 18582, May 2, 1990]

§ 151.25 Oil Record Book.

(a) Each oil tanker of 150 gross tons and above, ship of 400 gross tons and above other than an oil tanker, and manned fixed or floating drilling rig or other platform shall maintain an Oil Record Book Part I (Machinery Space Operations). An oil tanker of 150 gross tons and above or a non oil tanker that carries 200 cubic meters or more of oil in bulk, shall also maintain an Oil Record Book Part II (Cargo/Ballast Operations).

(b) An Oil Record Book printed by the U.S. Government is available to the masters or operators of all U.S. ships subject to this section, from any Coast Guard Sector Office, Marine Inspection Office, or Captain of the Port Office.

(c) The ownership of the Oil Record Book of all U.S. ships remains with the U.S. Government.

(d) Entries shall be made in the Oil Record Book on each occasion, on a tank to tank basis if appropriate, whenever any of the following machinery space operations take place on any ship to which this section applies—

(1) Ballasting or cleaning of fuel oil tanks;

(2) Discharge of ballast containing an oily mixture or cleaning water from fuel oil tanks;

(3) Disposal of oil residue; and

(4) Discharge overboard or disposal otherwise of bilge water that has accumulated in machinery spaces.

(e) Entries shall be made in the Oil Record Book on each occasion, on a tank to tank basis if appropriate, whenever any of the following cargo/ballast operations take place on any oil tanker to which this section applies—

(1) Loading of oil cargo;

(2) Internal transfer of oil cargo during voyage;

(3) Unloading of oil cargo;

(4) Ballasting of cargo tanks and dedicated clean ballast tanks;

(5) Cleaning of cargo tanks including crude oil washing;

(6) Discharge of ballast except from segregated ballast tanks;

(7) Discharge of water from slop tanks;

(8) Closing of all applicable valves or similar devices after slop tank discharge operations;

(9) Closing of valves necessary for isolation of dedicated clean ballast tanks from cargo and stripping lines after slop tank discharge operations; and

(10) Disposal of oil residue.

(f) Entries shall be made in the Oil Record Book on each occasion, on a tank-to-tank basis if appropriate, whenever any of the following operations take place on a fixed or floating drilling rig or other platform to which this section applies—

(1) Discharge of ballast or cleaning water from fuel oil tanks; and

(2) Discharge overboard of platform machinery space bilge water.

(g) In the event of an emergency, accidental or other exceptional discharge of oil or oily mixture, a statement shall be made in the Oil Record Book of the circumstances of, and the reasons for, the discharge.

(h) Each operation described in paragraphs (d), (e) and (f) of this section shall be fully recorded without delay in the Oil Record Book so that all the entries in the book appropriate to that operation are completed. Each completed operation shall be signed by the person or persons in charge of the operations concerned and each completed page shall be signed by the master or other person having charge of the ship.

(i) The Oil Record Book shall be kept in such a place as to be readily available for inspection at all reasonable times and shall be kept on board the ship.

(j) The master or other person having charge of a ship required to keep an Oil Record Book shall be responsible for the maintenance of such record.

(k) The Oil Record Book for a U.S. ship shall be maintained on board for not less than three years.

(l) This section does not apply to a barge or a fixed or floating drilling rig or other platform that is not equipped to discharge overboard any oil or oily mixture.

(m) This section does not apply to a fixed or floating drilling rig or other platform that is operating in compliance with a valid National Pollutant Discharge Elimination System (NPDES) permit.

(Approved by the Office of Management and Budget under control number 1625–0009)

[CGD 75–124a, 48 FR 45709, Oct. 6, 1983; 48 FR 54977, Dec. 8, 1983, as amended by CGD 88–002A, 55 FR 18582, May 2, 1990; USCG–2000–7641, 66 FR 55571, Nov. 2, 2001; USCG–2006–25150, 71 FR 39209, July 12, 2006; USCG–2006–25556, 72 FR 36328, July 2, 2007]

§ 151.26 Shipboard oil pollution emergency plans.

(a) *Language of the plan.* The shipboard oil pollution emergency plan must be available on board in English and in the working language of the master and the officers of the ship, if other than English.

(b) *Plan format.* The plan must contain the following six sections. A seventh non-mandatory section may be included at the shipowner's discretion:

(1) *Introduction.* This section must contain the following:

(i) *Introductory text.* The introductory text of the plan must contain the following language (For ships operating in Antarctica, the introductory text of the plan must contain the following language *and* explain that they are in accordance with the Protocol on Environmental Protection to the Antarctic Treaty):

This plan is written in accordance with the requirements of Regulation 37 of Annex I of the International Convention for the Prevention of Pollution from Ships, 1973, as modified by the Protocol of 1978 relating thereto (MARPOL 73/78).

The purpose of the plan is to provide guidance to the master and officers on board the ship with respect to the steps to be taken when a pollution incident has occurred or is likely to occur.

The plan contains all information and operational instructions required by the guidelines (Resolution MEPC.54(32) as amended by Resolution MEPC.86(44)). The appendices contain names, telephone numbers, telex numbers, etc. of all contacts referenced in the plan, as well as other reference material.

This plan has been approved by the Coast Guard and, except as provided below, no alteration or revision may be made to any part of it without the prior approval of the Coast Guard.

Changes to the seventh section of the plan and the appendices do not require approval by the Coast Guard. The appendices must be maintained up-to-date by the owners, operators, and managers.

(ii) General information.

(A) The ship's name, call sign, official number, International Maritime Organization (IMO) international number, and principal characteristics.

(B) [Reserved]

(2) *Preamble.* The plan must be realistic, practical, and easy to use, and the Preamble section of the plan must reflect these three features of the plan. The use of flowcharts, checklists, and appendices within the plan will aid in addressing this requirement. This section must contain an explanation of the purpose and use of the plan and indicate how the shipboard plan relates to other shore-based plans. Additionally, the Preamble section of the plan

must clearly recognize coastal States' rights to approve oil pollution response in their waters by stating the following:

Without interfering with shipowner's liability, some coastal States consider that it is their responsibility to define techniques and means to be taken against an oil pollution incident and approve such operations that might cause further pollution, i.e., lightening. States are entitled to do so under the International Convention relating to Intervention on the High Seas in Cases of Oil Pollution Casualties, 1969 (Intervention Convention).

(3) *Reporting Requirements.* This section of the plan must include information relating to the following:

(i) *When to report.* A report shall be made whenever an incident involves—

(A) A discharge of oil above the permitted level for any reason, including those for the purpose of securing the safety of the ship or saving life at sea;

(B) A discharge of oil or oily mixture during the operation of the ship in excess of the quantities or instantaneous rate permitted in §151.10 of this subpart or in §157.37 of this subchapter; or

(C) A probable discharge. Factors to be considered in determining whether a discharge is probable include, but are not limited to: ship location and proximity to land or other navigational hazards, weather, tide, current, sea state, and traffic density. The master must make a report in cases of collision, grounding, fire, explosion, structural failure, flooding or cargo shifting, or an incident resulting in failure or breakdown of steering gear, propulsion, electrical generating system, or essential shipborne navigational aids.

(ii) *Information required.* This section of the plan must include a notification form, such as the one depicted in Table 151.26(b)(3)(ii), that includes all the data elements required in Resolution A.851(20) and contains information to be provided in the initial and follow-up notifications. The official number of the vessel and current conditions of the vessel are to be included. In addition, the initial notification should include as much of the information on the form as possible, and supplemental information, as appropriate. However, the initial notification must not be delayed pending collection of all information. Copies of the form must be placed at the location(s) on the ship from which notification may be made.

TABLE 151.26(b)(3)(ii)

SHIPBOARD OIL POLLUTION EMERGENCY PLAN SAMPLE FORMAT FOR INITIAL NOTIFICATION	
AA (SHIP NAME, CALL SIGN, FLAG)	
BB (DATE AND TIME OF EVENT, UTC) □ □ □ □ □ □ D D H H M M	
CC (POSITION, LAT, LONG) □ □ □ □ N S d d m m □ □ □ □ □ E W d d d m m	DD (BEARING, DISTANCE FROM LANDMARK) □ □ □ □ d d d N miles
EE (COURSE) □ □ □ d d d	FF (SPEED, KNOTS) □ □ □ km km 1/10
LL (INTENDED TRACK)	
MM (RADIO STATION(S) GUARDED)	
NN (DATE AND TIME OF NEXT REPORT, UTC) □ □ □ □ □ □ D D H H M M	
PP (TYPE AND QUANTITY OF CARGO/BUNKERS ON BOARD)	
OO (BRIEF DETAILS OF DEFECTS/DEFICIENCIES/DAMAGE)	

TABLE 151.26(b)(3)(ii) Continued

RR (BRIEF DETAILS OF POLLUTION, INCLUDING ESTIMATE OF QUANTITY LOST)
SS (BRIEF DETAILS OF WEATHER AND SEA CONDITIONS) WIND [DIRECTION ⊔ ⊔ ⊔ / SPEED (Beaufort)] SWELL [DIRECTION ⊔ ⊔ ⊔ / HEIGHT (m)]
TT (CONTACT DETAILS OF SHIPS OWNER/OPERATOR/AGENT)
UU (SHIP, SIZE, AND TYPE) LENGTH: (m) BREADTH: (m) DRAUGHT: (m) TYPE:
XX (ADDITIONAL INFORMATION) BRIEF DETAILS OF INCIDENT: NEED FOR OUTSIDE ASSISTANCE: ACTIONS BEING TAKEN: NUMBER OF CREW AND DETAILS OF ANY INJURIES: DETAILS OF P&I CLUB & LOCAL CORRESPONDENT: OTHERS:

Note: The alphabetical reference letters in the above format are from "General principles for ship reporting systems and ship reporting requirements, including guidelines for reporting incidents involving dangerous goods, harmful substances and/or marine pollutants" adopted by the International Maritime Organization by resolution A.851(20). The letters do not follow the complete alphabetical sequence as certain letters are used to designate information required for other standard reporting formats, e.g., those used to transmit route information.

(iii) *Whom to contact.* (A) This section of the plan must make reference to the appendices listing coastal state contacts, port contacts, and ship interest contacts. In order to expedite response and minimize damage from a pollution incident, it is essential that appropriate coastal States should be notified without delay. This process begins with the initial report required by article 8 and Protocol I of MARPOL 73/78.

(B) For actual or probable discharges of oil, or oily mixtures the reports must comply with the procedures described in MARPOL Protocol I. The reports shall be directed to either the nearest Captain of the Port (COTP) or to the National Response Center (NRC), *toll free telephone number:* 800–424–8802, *direct telephone:* 202–267–2675, or *Fax:* 202–267–1322.

(C) For Antarctica, in addition to compliance with paragraph (b)(3)(iii)(B) of this section, reports shall also be directed to any Antarctic station that may be affected.

(D) The plan must clearly specify who will be responsible for informing the necessary parties from the coastal State contacts, the port contacts, and the ship interest contacts.

(4) *Steps to control a discharge.* This section of the plan must contain a discussion of procedures to address the following scenarios:

(i) Operational spills: The plan must outline procedures for safe removal of oil spilled and contained on deck. The plan must also provide guidance to ensure proper disposal of recovered oil and cleanup materials;

(ii) Spills resulting from casualties: Casualties should be treated in the plan as a separate section. The plan should include various checklists or other means that will ensure the master considers all appropriate factors when addressing the specific casualty

(Reference is made here to the International Safety Management (ISM) Code, Section 8). These checklists must be tailored to the specific ship and to the specific product or product types. In addition to the checklists, specific personnel assignments for anticipated tasks must be identified. Reference to existing fire control plans and muster lists is sufficient to identify personnel responsibilities. The following are examples of casualties that must be considered—

(A) Grounding;

(B) Fire or explosion;

(C) Collision/Allision;

(D) Hull failure;

(E) Excessive list;

(F) Containment system failure;

(G) Submerged/Foundered;

(H) Wrecked/Stranded; and

(I) Hazardous vapor release.

(iii) In addition to the checklist and personnel duty assignments required by paragraph (b)(4)(ii) of this section, the plan must include—

(A) Priority actions to ensure the safety of personnel and the ship, assess the damage to the ship, and take appropriate further action;

(B) Stability and strength considerations: The plan should provide the master with detailed guidance to ensure that great care in casualty response must be taken to consider stability and strength when taking actions to mitigate the spillage of oil or to free the vessel if aground. Information for making damage stability and longitudinal strength assessments, or contacting classification societies to acquire such information, should be included. Where appropriate, the plan should provide a list of information for making damage stability and damage longitudinal strength assessments. The damage stability information for oil tankers and offshore oil barges in 33 CFR 155.240 is required to be provided in the SOPEP;

(C) Lightening procedures to be followed in cases of extensive structural damage: The plan must contain information on procedures to be followed for ship-to-ship transfer of cargo. Reference may be made in the plan to existing company guides. A copy of such company procedures for ship-to-ship transfer operations must be kept in the plan. The plan must address the coordination of this activity with the coastal or port state, as appropriate;

(D) Mitigating activities: The spill mitigation requirements of 33 CFR 155.1035(c) must be met for tankships, the requirements of 33 CFR 155.1040(c) must be met for unmanned vessels, and the requirements of 33 CFR 155.5035(c) must be met for nontank vessels. Additionally, the following personnel safety mitigation strategies must be addressed for all personnel involved—

(1) Assessment and monitoring activities;

(2) Personnel protection issues;

(3) Protective equipment;

(4) Threats to health and safety;

(5) Containment and other response techniques;

(6) Isolation procedures;

(7) Decontamination of personnel; and

(8) Disposal of removed oil and cleanup materials; and

(E) Drawings and ship-specific details: Supporting plans, drawings, and ship-specific details such as a layout of a general arrangement plan, midship section, lines or tables of offsets, and tank tables must be included with the plan. The plan must show where current cargo, bunker or ballast information, including quantities and specifications, is available.

(5) *National and Local Coordination.* (i) This section of the plan must contain information to assist the master in initiating action by the coastal State, local government, or other involved parties. This information must include guidance to assist the master with organizing a response to the incident, should a response not be organized by the shore authorities. Detailed information for specific areas may be included as appendices to the plan. See 33 CFR 151.26(b)(2) (Preamble) regarding a ship owner's responsibility to comply with individual state requirements for oil spill response.

(ii) For Antarctica, a vessel owner or operator must include a plan for prompt and effective response action to such emergencies as might arise in the performance of its vessel's activities.

(iii) To comply with paragraph (b)(5)(ii) of this section, an agency of the United States government may

promulgate a directive providing for prompt and effective response by the agency's public vessels operating in Antarctica.

(6) *Appendices*. Appendices must include the following information:

(i) Twenty-four hour contact information and alternates to the designated contacts. These details must be routinely updated to account for personnel changes and changes in telephone, telex, and telefacsimile numbers. Clear guidance must also be provided regarding the preferred means of communication.

(ii) The following lists, each identified as a separate appendix:

(A) A list of agencies or officials of coastal state administrations responsible for receiving and processing incident reports;

(B) A list of agencies or officials in regularly visited ports. When this is not feasible, the master must obtain details concerning local reporting procedures upon arrival in port; and

(C) A list of all parties with a financial interest in the ship such as ship and cargo owners, insurers, and salvage interests.

(D) A list which specifies who will be responsible for informing the parties listed and the priority in which they must be notified.

(iii) A record of annual reviews and changes.

(7) *Non-mandatory provisions*. If this section is included by the shipowner, it should include the following types of information or any other information that may be appropriate:

(i) Response equipment or oil spill removal organizations;

(ii) Public affairs practices;

(iii) Recordkeeping;

(iv) Plan exercising; and

(v) Individuals qualified to respond.

(8) *Index of sections*. The plan must be organized as depicted in Table 151.26(b)(8).

TABLE 151.26(b)(8)—INDEX OF SECTIONS—SAMPLE FORMAT

Mandatory

Section 1: Introduction
Section 2: Preamble
Section 3: Reporting requirements
Section 4: Steps to control a discharge
Section 5: National and local coordination
Section 6: Appendices

Voluntary

Section 7: Non-mandatory provisions

[CGD 93–030, 59 FR 51338, Oct. 7, 1994, as amended by CGD 97–015, 62 FR 18045, Apr. 14, 1997; USCG–2000–7641, 66 FR 55571, Nov. 2, 2001; USCG–2008–0179, 73 FR 35014, June 19, 2008; USCG–2008–1070, 78 FR 60120, Sept. 30, 2013]

§ 151.27 Plan submission and approval.

(a) No manned ship subject to this part may operate unless it carries on board a shipboard oil pollution emergency plan approved by the Coast Guard. An unmanned ship subject to this regulation must carry the notification list required in § 151.26(b)(3) on board in the documentation container; remaining sections of the plan must be maintained on file at the home office. For new ships, plans must be submitted at least 90 days before the ship intends to begin operations.

(b) An owner or operator of a ship to which this part applies shall prepare and submit one English language copy of the shipboard oil pollution emergency plan to Commandant (CG–5431), U.S. Coast Guard, 2100 2nd St., SW., Stop 7581, Washington, DC 20593–7581.

(c) An owner or operator with multiple ships to which this part applies may submit one plan for each type of ship with a separate ship-specific appendix for each vessel covered by the plan.

(d) Combined shipboard oil pollution emergency plans and response plans meeting the requirements of subparts D and E of part 155 of this chapter must be prepared according to § 155.1030(j) of this chapter.

(e) If the Coast Guard determines that the plan meets the requirements of this section, the Coast Guard will issue an approval letter. The approval period for a plan expires 5 years after the approval date.

(f) If the Coast Guard determines that the plan does not meet the requirements, the Coast Guard will notify the owner or operator of the plan's deficiency. The owner or operator must then resubmit a copy of the revised plan or the corrected portions of the

plan, within the time period specified in the written notice provided by the Coast Guard.

(g) Plans, including revisions, should be submitted electronically by using the Vessel Response Plan Electronic Submission Tool available at *https://homeport.uscg.mil/vrpexpress*.

(h) If plans are submitted in paper format, owners or operators should use CG Form ''Application for Approval/Revision of Vessel Pollution Response Plans'' (CG–6083) located at: *http://www.uscg.mil/forms/CG/CG__6083.pdf* in lieu of a cover letter to make initial application for plan submission and revision.

[CGD 93–030, 59 FR 51342, Oct. 7, 1994, as amended by CGD 96–026, 61 FR 33665, June 28, 1996; USCG–1998–3799, 63 FR 35530, June 30, 1998; USCG–2008–0179, 73 FR 35014, June 19, 2008; USCG–2010–0351, 75 FR 36284, June 25, 2010; USCG–2008–1070, 78 FR 60122, Sept. 30, 2013]

§ 151.28 Plan review and revision.

(a) An owner or operator of a ship to which this subpart applies must review the shipboard oil pollution emergency plan annually and submit a letter to Commandant (CG–5431) certifying that the review has been completed. This review must occur within 1 month of the anniversary date of Coast Guard approval of the plan.

(b) The owner or operator shall submit any plan amendments to Commandant (CG–5431) for information or approval.

(c) The entire plan must be resubmitted to Commandant (CG–5431) for reapproval 6 months before the end of the Coast Guard approval period identified in § 151.27(e) of this subpart.

(d) A record of annual review and changes to the plan must be maintained in the last appendix of section six of the plan.

(e) Except as provided in paragraph (f) of this section, revisions must receive prior approval by the Coast Guard before they can be incorporated into the plan.

(f) Revisions to the seventh section of the plan and the appendices do not require approval by the Coast Guard. The Coast Guard shall be advised and provided a copy of the revisions as they occur.

(g) Plans, including revisions, should be submitted electronically by using the Vessel Response Plan Electronic Submission Tool available at *https://homeport.uscg.mil/vrpexpress*.

(h) If plans are submitted in paper format, owners or operators should use CG Form ''Application for Approval/Revision of Vessel Pollution Response Plans'' (CG–6083) located at: *http://www.uscg.mil/forms/CG/CG__6083.pdf* in lieu of a cover letter to request the required resubmission, plan amendment, or revision.

[CGD 93–030, 59 FR 51342, Oct. 7, 1994, as amended by CGD 96–026, 61 FR 33665, June 28, 1996; USCG–2008–0179, 73 FR 35014, June 19, 2008; USCG–2008–1070, 78 FR 60122, Sept. 30, 2013]

§ 151.29 Foreign ships.

(a) Each oil tanker of 150 gross tons and above and each other ship of 400 gross tons and above, operated under the authority of a country other than the United States that is party to MARPOL 73/78, shall, while in the navigable waters of the United States or while at a port or terminal under the jurisdiction of the United States, carry on board a shipboard oil pollution emergency plan approved by its flag state.

(b) Each oil tanker of 150 gross tons and above and each other ship of 400 gross tons and above, operated under the authority of a country that is not a party to MARPOL 73/78, must comply with § 151.21 of this subpart while in the navigable waters of the United States.

[CGD 93–030, 59 FR 51342, Oct. 7, 1994]

NOXIOUS LIQUID SUBSTANCE POLLUTION

SOURCE: Sections 151.30 through 151.49 appear by CGD 85–010, 52 FR 7759, Mar. 12, 1987, unless otherwise noted.

§ 151.30 Applicability.

(a) Except as provided in paragraph (b) of this section, §§ 151.30 through 151.49 apply to each ship that—

(1) Is operated under the authority of the United States and engages in international voyages;

(2) Is operated under the authority of the United States and is certificated for ocean service;

(3) Is operated under the authority of the United States and is certificated for coastwise service beyond three nautical miles from land;

(4) Is operated under the authority of the United States and operates at any time seaward of the outermost boundary of the territorial sea of the United States as defined in § 2.22 of this chapter; or

(5) Is operated under the authority of a country other than the United States while in the navigable waters of the United States, or while at a port or terminal under the jurisdiction of the United States.

(b) Sections 151.30 through 151.49 do not apply to—

(1) A tank barge whose certificate is endorsed by the Coast Guard for a limited short protected coastwise route if the barge is constructed and certificated primarily for service on an inland route;

(2) A warship, naval auxiliary, or other ship owned or operated by a country when engaged in noncommercial service;

(3) A Canadian or U.S. ship being operated exclusively on the Great Lakes of North America or their connecting and tributary waters;

(4) A Canadian or U.S. ship being operated exclusively on the internal waters of the United States and Canada; or

(5) Any other ship specifically excluded by MARPOL 73/78.

NOTE TO § 151.30 (b)(4): The term ''internal waters'' is defined in § 2.24 of this chapter.

[CGD 88–002, 54 FR 18405, Apr. 28, 1989, as amended by CGD 88–002A, 55 FR 18582, May 2, 1990; USCG–2008–0179, 73 FR 35014, June 19, 2008]

§ 151.31 Where to find requirements applying to oceangoing ships carrying Category A, B, C, and D NLS.

(a) The requirements for oceangoing ships carrying NLSs listed in §§ 151.47 and 151.49 are in §§ 151.33 through 151.45.

(b) The requirements for oceangoing ships carrying NLSs listed in Table 151.05 of 46 CFR part 151 and Table 1 of 46 CFR part 153, which are not listed in § 151.47 or § 151.49, are in 46 CFR parts 98, 151, and 153.

(c) Alternatives to the requirements in this part for oceangoing ships carrying NLSs are in 46 CFR part 153.

(d) Procedures for obtaining permission to carry an NLS not listed in § 151.47, § 151.49, Table 151.05 of 46 CFR part 151, or Table 1 of 46 CFR part 153 are in 46 CFR 153.900(c).

§ 151.32 Special areas for the purpose of Annex II.

(a) For the purposes of §§ 151.30 through 151.49, the special areas are the Baltic Sea area, the Black Sea area, and the Antarctic area which are described in § 151.06. Discharges into the sea of NLSs or mixtures containing such substances are prohibited in the Antarctic area.

(b) In accordance with paragraph (13)(a) of Regulation 5 of Annex II of MARPOL 73/78, the discharge restrictions in § 151.32 for the Baltic Sea area and the Black Sea area will enter into effect when each Party to MARPOL 73/78 whose coastline borders the special area has certified that reception facilities are available and the IMO has established an effective date for each special area. Notice of the effective date for discharge requirements in these areas will be published in the FEDERAL REGISTER and reflected in this section.

[CGD 94–056, 60 FR 43378, Aug. 21, 1995]

§ 151.33 Certificates needed to carry Category C Oil-like NLS.

(a) A U.S. oceangoing ship may not carry a Category C oil-like NLS listed in § 151.49 in a cargo tank unless the ship has a Certificate of Inspection endorsed to allow the NLS to be carried in that cargo tank, and if the ship engages in a foreign voyage—

(1) An Attachment for NLSs to the IOPP Certificate, issued under § 151.37(a), that allows the NLS to be carried in that cargo tank; or

(2) A Certificate of Fitness issued under 46 CFR part 153 that allows the NLS to be carried in that cargo tank.

(b) A foreign oceangoing ship operating in the navigable waters of the U.S. may not carry a Category C oil-like NLS listed in § 151.49 in a cargo tank unless the ship has—

(1) An Attachment for NLSs to the IOPP Certificate that allows the NLS to be carried in that cargo tank; or

(2) A Certificate of Compliance issued under 46 CFR Part 153 to allow the NLS to be carried in that cargo tank.

(c) A U.S. oceangoing ship authorized to carry certain dangerous cargoes in bulk under 46 CFR Part 98 may not carry a Category C oil-like NLS listed in § 151.49 in a cargo tank unless the ship has a Certificate of Inspection endorsed to allow the NLS to be carried in that cargo tank, and if the ship engages in a foreign voyage, an NLS Certificate issued under § 151.37(b) that allows the NLS to be carried in that cargo tank.

§ 151.35 Certificates needed to carry Category D NLS and Category D Oil-like NLS.

(a) A U.S. oceangoing ship may not carry a Category D NLS listed in § 151.47 in a cargo tank unless the ship has a Certificate of Inspection endorsed to allow the NLS to be carried in that cargo tank, and if the ship engages if a foreign voyage—

(1) An NLS Certificate issued under § 151.37(b) to allow the NLS to be carried in that cargo tank; or

(2) A Certificate of Fitness issued under 46 CFR part 153 to allow the NLS to be carried in that cargo tank.

(b) A U.S. oceangoing ship may not carry a Category D oil-like NLS listed in § 151.49 in a cargo tank unless the ship has a Certificate of Inspection endorsed to allow the NLS to be carried in that cargo tank, and if the ship engages if a foreign voyage—

(1) An Attachment for NLSs to the IOPP Certificate, issued under § 151.37(a), to allow the NLS to be carried in that cargo tank; or

(2) An NLS Certificate issued under § 151.37(b) to allow the NLS to be carried in that cargo tank, or

(3) A Certificate of Fitness issued under 46 CFR part 153 to allow the NLS to be carried in that cargo tank.

(c) A foreign oceangoing ship in the navigable waters of the U.S. may not carry a Category D NLS listed in § 151.47 in a cargo tank unless the ship has one of the following:

(1) An NLS Certificate endorsed to allow the NLS to be carried in that cargo tank; or

(2) A Certificate of Compliance issued under 46 CFR part 153 to allow the NLS to be carried in that cargo tank.

(d) A foreign oceangoing ship in the navigable waters of the U.S. may not carry a Category D oil-like NLS listed in § 151.49 in a cargo tank unless the ship has one of the following:

(1) An Attachment for NLSs to the IOPP Certificate to allow the NLS to be carried in that cargo tank; or

(2) An NLS Certificate endorsed to allow the NLS to be carried in the cargo tank; or

(3) A Certificate of Compliance issued under 46 CFR part 153 to allow the NLS to be carried in the cargo tank.

(e) A U.S. oceangoing ship authorized to carry certain dangerous cargoes in bulk under 46 CFR part 98 may not carry a Category D NLS listed in § 151.47 or a Category D oil-like NLS listed in § 151.49 in a cargo tank unless the ship has a Certificate of Inspection endorsed to allow the NLS to be carried in that cargo tank, and if the ship engages in a foreign voyage, an NLS Certificate issued under § 151.37(b) that allows the NLS to be carried in that cargo tank.

§ 151.37 Obtaining an Attachment for NLSs to the IOPP Certificate and obtaining an NLS Certificate.

(a) The Coast Guard or a classification society authorized under 46 CFR part 8 issues an Attachment for NLSs to the IOPP Certificate to an oceangoing ship to allow the carriage of a Category C oil-like NLS or a Category D oil-like NLS if the following requirements are met:

(1) Except for ships that are not configured and are not equipped to ballast or wash cargo tanks while proceeding en route, the ship must have a Coast Guard approved monitor under § 157.12 that is approved for the cargoes that are desired to be carried.

(2) Except as required by paragraph (a)(3), ships of 150 meters or less in length carrying a Category C oil-like NLS must meet the damage stability requirements applying to a Type III hull as provided by Regulation 14 (c) of Annex II.

(3) A U.S. self propelled ship of 150 meters or less in length on a coastwise voyage carrying a Category C oil-like

NLS must meet the damage stability requirements applying to a Type III hull as provided by 46 CFR part 172, subpart F except §§ 172.130 and 172.133.

(b) Except as allowed in paragraph (c) of this section, the Coast Guard or a classification society authorized under 46 CFR part 8 issues an NLS Certificate endorsed to allow the oceangoing ship engaged in a foreign voyage to carry a Category D NLS listed in § 151.47 if the ship has—

(1) An approved Procedures and Arrangements Manual and Cargo Record Book, both meeting the requirements in 46 CFR 153.490; and

(2) A residue discharge system meeting 46 CFR 153.470, unless the approved Procedures and Arrangements Manual limits discharge of Category D NLS residue to the alternative provided by 46 CFR 153.1128(b).

(c) The Coast Guard or a classification society authorized under 46 CFR part 8 issues a NLS Certificate with the statement that the vessel is prohibited from discharging NLS residues to the sea if the vessel does not meet 46 CFR 153.470 and 153.490 but meets 46 CFR subpart 98.31.

[CGD 75–124a, 48 FR 45709, Oct. 6, 1983, as amended by CGD 95–010, 62 FR 67532, Dec. 24, 1997]

§ 151.39 Operating requirements: Category D NLS.

The master or person in charge of an oceangoing ship that carries a Category D NLS listed in § 151.47 shall ensure that the ship is operated as prescribed for the operation of oceangoing ships carrying Category D NLSs in 46 CFR 153.901, 153.909, 153.1100, 153.1104, 153.1106, 153.1124, 153.1126, and 153.1128.

[CGD 85–010, 52 FR 7759, Mar. 12, 1987, as amended by USCG–2008–0179, 73 FR 35014, June 19, 2008]

§ 151.41 Operating requirements for oceangoing ships with IOPP Certificates: Category C and D Oil-like NLSs.

The master or person in charge of an oceangoing ship certificated under § 151.37(a) shall ensure that—

(a) The carriage and discharge of the oil-like NLS meets §§ 157.29, 157.31, 157.35, 157.37, 157.41, 157.45, 157.47, and 157.49 of this chapter; and

(b) The oil-like NLS is not discharged unless—

(1) The monitor required by § 151.37(a)(1) is set to detect the oil-like NLS; and

(2) A statement that the monitor has been set to detect the oil-like NLS is entered in the Oil Record Book Part II(Cargo/Ballast Operations), required by § 151.25.

§ 151.43 Control of discharge of NLS residues.

(a) Unless the ship is a fixed or floating drilling rig or other platform operating under an National Pollution Discharge Elimination System (NPDES) permit, the master or person in charge of an oceangoing ship that cannot discharge NLS residue into the sea in accordance with 46 CFR 153.1126 or 153.1128 shall ensure that the NLS residue is—

(1) Retained on board; or

(2) Discharged to a reception facility.

(b) If Category A, B, or C NLS cargo or NLS residue is to be transfered at a port or terminal in the United States, the master or person in charge of each oceangoing ship carrying NLS cargo or NLS residue shall notify the port or terminal at least 24 hours before entering the port or terminal of—

(1) The name of the ship;

(2) The name, category and volume of NLS cargo to be unloaded;

(3) If the cargo is a Category B or C high viscosity NLS cargo or solidifying NLS cargo listed in Table 1 of 46 CFR Part 153 with a reference to ''§ 153.908(a)'' or ''§ 153.908(b)'' in the ''Special Requirements'' column of that table, the time of day the ship is estimated to be ready to discharge NLS residue to a reception facility;

(4) If the cargo is any Category B or C NLS cargo not under paragraph (b)(3) of this section, whether or not the ship meets the stripping requirements under 46 CFR 153.480, 153.481, or 153.482;

(5) The name and the estimated volume of NLS in the NLS residue to be discharged;

(6) The total volume of NLS residue to be discharged; and

(7) The name and amount of any cleaning agents to be used during the prewash required by 46 CFR 153.1120.

(c) The master or person in charge of a U.S. ship in a special area shall operate the ship in accordance with 46 CFR 153.903.

NOTE: The master or person in charge of a ship carrying Category A NLS that is required to prewash tanks under the procedures in 46 CFR Part 153.1120 is required under 46 CFR 153.1101 to notify the COTP at least 24 hours before a prewash surveyor is needed.

§ 151.47 Category D NLSs other than oil-like Category D NLSs that may be carried under this part.

The following is a list of Category D NLSs other than Oil-like Category D NLSs that the Coast Guard allows to be carried:

Acetophenone
Acrylonitrile-Styrene copolymer dispersion in Polyether polyol
iso- & cyclo-Alkane (C10–C11)
Alkenyl(C11+)amine
Alkyl(C8+)amine, Alkenyl (C12+) acid ester mixture
Alkyl dithiothiadiazole (C6–C24)
Alkyl ester copolymer (C4–C20)
Alkyl(C8–C40) phenol sulfide
Aluminum sulfate solution
Ammonium hydrogen phosphate solution
Ammonium nitrate solution (45% or less)
Ammonium nitrate, Urea solution (2% or less NH_3)
Ammonium phosphate, Urea solution
Ammonium polyphosphate solution
Ammonium sulfate solution (20% or less)
Amyl alcohol (iso-, n-, sec-, primary)
Animal and Fish oils, n.o.s. (*see also Oil, edible*)
Animal and Fish acid oils and distillates, n.o.s.
Aryl polyolefin (C11–C50)
Brake fluid base mixtures
Butylene glycol
iso-Butyl formate
n-Butyl formate
gamma-Butyrolactone
Calcium hydroxide slurry
Calcium long chain alkyl sulfonate (C11–C50)
Calcium long chain alkyl(C11–C40) phenate
Calcium long chain alkyl phenate sulfide (C8-C40)
Caprolactam solutions
Chlorine chloride solution
Citric acid (70% or less)
Coconut oil fatty acid methyl ester
Copper salt of long chain (C17+) alkanoic acid
Cyclohexanol
Decahydronaphthalene
Diacetone alcohol
Dialkyl(C8–C9) diphenylamines
Dialkyl(C7–C13) phthalates
Diethylene glycol
Diethylene glycol butyl ether acetate, *see* Poly(2-8) alkylene glycol monoalkyl(C1–C6) ether acetate
Diethylene glycol dibutyl ether
Diethylene glycol ethyl ether, *see* Poly(2–8)alkylene glycol monoalkyl(C1–C6) ether
Diethylene glycol ethyl ether acetate, *see* Poly(2–8)alkylene glycol monoalkyl(C1–C6) ether acetate
Diethylene glycol methyl ether acetate, *see* Poly(2–8)alkylene glycol monoalkyl(C1–C6) ether acetate
Diethylene glycol phenyl ether
Diethylene glycol phthalate
Di-(2-ethylhexyl)adipate
1,4-Dihydro-9,10-dihydroxy anthracene, disodium salt solution
Diisobutyl ketone
Diisodecyl phthalate, see Dialkyl(C7–C13) phthalates
Diisononyl adipate
Diisononyl phthalate, see Dialkyl(C7–C13) phthalates
2,2-Dimethylpropane-1,3-diol
Dinonyl phthalate, see Dialkyl(C7–C13) phthalates
Dipropylene glycol dibenzoate
Dipropylene glycol methyl ether, *see* Poly(2–8)alkylene glycol monoalkyl(C1-C6) ether
Ditridecyl phthalate, see Dialkyl(C7–C13) phthalates
Diundecyl phthalate, see Dialkyl(C7–C13) phthalates
Dodecenylsuccinic acid, dipotassium salt solution
Ethoxylated long chain (C16+) alkyloxyalkanamine
Ethoxy triglycol (*crude*)
2-Ethyl-2-(hydroxymethyl)propane-1,3-diol, C8–C10 ester
Ethyl acetate
Ethyl acetoacetate
Ethyl butanol
Ethylenediaminetetraacetic acid, tetrasodium salt solution
Ethylene glycol
Ethylene glycol acetate
Ethylene glycol dibutyl ether
Ethylene glycol methyl butyl ether
Ethylene glycol phenyl ether
Ethylene glycol phenyl ether, Diethylene glycol phenyl ether mixture
2-Ethylhexanoic acid, see Octanoic acid
Ethyl propionate
Ferric hydroxyethylethylene diamine triacetic acid, trisodium salt solution
Formamide
Glycerine (83%), Dioxanedimethanol (17%) mixture
Glycerol monooleate
Glyoxal solution (40% or less)
Glyphosate solution (not containing surfactant)
Heptanoic acid
Hexamethylenediamine adipate
Hexamethylenetetramine solutions
Hexanoic acid

Hexanol
N–(Hydroxyethyl)ethylenediamine triacetic acid, trisodium salt solution
Isophorone
Lactic acid
Latex (ammonia (1% or less) inhibited)
Long chain alkaryl sulfonic acid (C16–C60)
Magnesium long chain alkaryl sulfonate (C11–C50)
Magnesium long chain alkyl phenate sulfide (C8–C20)
3-Methoxybutyl acetate
Methyl acetoacetate
Methyl alcohol
Methyl amyl ketone
Methyl butenol
Methyl butyl ketone
Methyl isobutyl ketone
Methyl tert-butyl ether
Methyl butynol
Methyl propyl ketone
N-Methyl-2-pyrrolidone
Myrcene
Naphthalene sulfonic acid-formaldehyde copolymer, sodium salt solution
Nonanoic acid (all isomers)
Nonanoic, Tridecanoic acid mixture
Nonyl methacrylate
Noxious Liquid Substance, (17) n.o.s.
Octadecenoamide solution
Octanoic acid
Oil, edible:
Babassu
Beechnut
Castor
Cocoa butter
Coconut
Cod liver
Corn
Cottonseed
Fish
Groundnut
Hazelnut
Nutmeg butter
Olive
Palm
Palm kernel
Peanut
Poppy
Raisin seed
Rapeseed
Rice bran
Safflower
Salad
Sesame
Soya bean
Sunflower seed
Tucum
Vegetable
Walnut
Oil, misc:
Animal, n.o.s.
Coconut oil, esterified
Coconut oil, fatty acid methyl ester
Lanolin
Linseed
Neatsfoot
Oiticica
Palm oil, fatty acid methyl ester
Palm oil, methyl ester
Perilla
Pilchard
Soya bean (epoxidized)
Sperm
Tung
Whale
Olefin/Alkyl ester copolymer (molecular weight 2000+)
Oleic acid
Palm kernel acid oil, methyl ester
Palm stearin
Pentaethylenehexamine
Pentanoic acid
Poly(2–8)alkylene glycol monoalkyl(C1-C6) ether, *Including:*
Diethylene glycol butyl ether
Diethylene glycol ethyl ether
Diethylene glycol n-hexyl ether
Diethylene glycol methyl ether
Diethylene glycol n-propyl ether
Dipropylene glycol butyl ether
Dipropylene glycol methyl ether
Polypropylene glycol methyl ether
Triethylene glycol butyl ether
Triethylene glycol ethyl ether
Triethylene glycol methyl ether
Tripropylene glycol methyl ether
Poly(2–8)alkylene glycol monoalkyl(C1–C6) ether acetate, *Including:*
Diethylene glycol butyl ether acetate
Diethylene glycol ethyl ether acetate
Diethylene glycol methyl ether acetate
Polyalkylene glycols, Polyalkylene glycol monoalkyl ethers mixtures
Polypropylene glycol methyl ether, *see* Poly(2–8)alkylene glycol monoalkyl(C1–C6) ether
Polyalkyl(C10–C20) methacrylate
Polybutenyl succinimide
Polyether (molecular weight 2000+)
Polyethylene glycol monoalkyl ether
Polyolefin amide alkeneamine (C17+)
Polyolefin amide alkeneamine (C28+)
Polyolefin amide alkeneamine borate (C28–C250)
Polyolefin amide alkeneamine polyol
Polyolefin anhydride
Polyolefin ester (C28–C250)
Polyolefin phenolic amine (C28–C250)
Polyolefin phosphorosulfide, barium derivative
Polypropylene glycol
n-Propyl acetate
Propylene glycol monoalkyl ether, Including:
n-Propoxypropanol
Propylene glycol n-butyl ether
Propylene glycol ethyl ether
Propylene glycol methyl ether
Propylene glycol ethyl ether, see Propylene glycol monoalkyl ether
Propylene glycol methyl ether, see Propylene glycol monoalkyl ether
Propylene glycol methyl ether acetate

Propylene glycol phenyl ether
Sodium acetate solution
Sodium benzoate solution
Sodium carbonate solution
Soybean oil (epoxidized)
Sulfohydrocarbon (C3–C88)
Sulfonated polyacrylate solution
Sulfolane
Sulfurized fat (C14–C20)
Sulfurized polyolefinamide alkene(C28–C250)amine
Tallow
Tallow fatty acid
Tetrasodium salt of Ethylenediaminetetraacetic acid solution
Triethylene glycol butyl ether, see Poly(2–8)alkylene glycol monoalkyl(C1–C6) ether
Triethylene glycol ethyl ether, see Poly(2–8)alkylene glycol monoalkyl(C1–C6) ether
Triethylene glycol methyl ether, see Poly(2–8)alkylene glycol monoalkyl(C1–C6) ether
Triethyl phosphate
Trimethylol propane polyethoxylate
Tripropylene glycol methyl ether, see Poly(2–8)alkylene glycol monoalkyl(C1–C6) ether
Trisodium salt of N-(Hydroxyethyl)-ethylenediamine triacetic acid solution
Urea, Ammonium mono- and di-hydrogen phosphate, Potassium chloride solution
Urea, Ammonium nitrate solution (2% or less NH_3)
Urea, Ammonium phosphate solution
Vegetable oils, n.o.s. (see also Oil, edible)
Vegetable acid oils and distillates, n.o.s.
Waxes:
Candelilla
Carnauba

[CGD 85–010, 52 FR 7759, Mar. 12, 1987, as amended by CGD 88–100a, 54 FR 40000, Sept. 29, 1989; 55 FR 17269, Apr. 24, 1990; CGD 92–100a, 59 FR 16986, Apr. 11, 1994; CGD 94–901, 59 FR 45147, Aug. 31, 1994; CGD 95–901, 60 FR 34039, June 29, 1995; USCG 2000–7079, 65 FR 67155, Nov. 8, 2000]

§ 151.49 Category C and D Oil-like NLSs allowed for carriage.

The following is a list of Category C and D Oil-like NLSs that the Coast Guard allows to be carried:

(a) The following Category C oil-like NLSs may be carried:

Aviation alkylates
Cycloheptane
Cyclohexane
Cyclopentane
p-Cymene
Ethylcyclohexane
Heptane (all isomers)
Heptene (all isomers)
Hexane (all isomers)
Hexene (all isomers)
iso-Propylcyclohexane
Methyl cyclohexane
2-Methyl-1-pentene, *see* Hexene (all isomers)
Nonane (all isomers)
Octane (all isomers)
Olefin mixtures (C5–C7)
Pentane (all isomers)
Pentene (all isomers)
1-Phenyl-1-xylylethane
Propylene dimer
Tetrahydronaphthalene
Toluene
Xylenes

(b) [Reserved]

[CGD 85–010, 52 FR 7759, Mar. 12, 1987, as amended by CGD 88–100a, 54 FR 40001, Sept. 29, 1989; 55 FR 17269, Apr. 24, 1990; CGD 92–100a, 59 FR 16987, Apr. 11, 1994; CGD 94–901, 59 FR 45148, Aug. 31, 1994; CGD 95–901, 60 FR 34039, June 29, 1995; USCG 2000–7079, 65 FR 67157, Nov. 8, 2000; USCG–2008–0179, 73 FR 35014, June 19, 2008]

GARBAGE POLLUTION AND SEWAGE

SOURCE: Sections 151.51 through 151.77 and Appendix A appear by CGD 88–002, 54 FR 18405, Apr. 28, 1989, unless otherwise noted.

§ 151.51 Applicability.

(a) Except as provided in paragraphs (b) through (f) of this section, §§ 151.51 through 151.77 apply to each ship that—

(1) Is of United States registry or nationality, or one operated under the authority of the United States, including recreational vessels defined in 46 U.S.C. 2101(25) and uninspected vessels defined in 46 U.S.C. 2101(43), wherever located; or

(2) Is operated under the authority of a country other than the United States while in the navigable waters or the Exclusive Economic Zone of the United States.

(b) Sections 151.51 through 151.77 do not apply to—

(1) A warship, naval auxiliary, or other ship owned or operated by a country when engaged in noncommercial service; or

(2) Any other ship specifically excluded by MARPOL.

(c) Section 151.55 (Recordkeeping) applies to—

(1) A manned oceangoing ship (other than a fixed or floating drilling rig or other platform) of 400 gross tons and above that is documented under the laws of the United States or numbered by a State;

(2) A manned oceangoing ship (other than a fixed or floating drilling rig or

other platform) of 400 gross tons and above that is operated under the authority of a country other than the United States while in the navigable waters or the Exclusive Economic Zone of the United States;

(3) A manned fixed or floating drilling rig or other platform subject to the jurisdiction of the United States; or

(4) A manned ship that is certified to carry 15 or more persons engaged in international voyages.

(d) Section 151.57 (Garbage Management Plans) applies to—

(1) A manned oceangoing ship (other than a fixed or floating drilling rig or other platform) of 40 feet or more in length that is documented under the laws of the United States or numbered by a state and that either is engaged in commerce or is equipped with a galley and berthing;

(2) A manned fixed or floating drilling rig or other platform subject to the jurisdiction of the United States; or

(3) A manned ship of 100 gross tons or more that is operated under the authority of a country other than the United States while in the navigable waters or the Exclusive Economic Zone of the United States.

(e) Section 151.59 (Placards) applies to—

(1) A manned U.S. ship (other than a fixed or floating drilling rig or other platform) that is 26 feet or more in length;

(2) A manned floating drilling rig or other platform in transit that is subject to the jurisdiction of the United States; or

(3) A manned ship of 40 feet or more in length that is operated under the authority of a country other than the United States while in the navigable waters or the Exclusive Economic Zone of the United States.

(f) Section 151.73 (Discharge of Garbage from Fixed or Floating platforms) only applies to a fixed or floating drilling rig or other platform subject to the jurisdiction of the United States.

NOTE TO §151.51: The Exclusive Economic Zone extends from the baseline of the territorial sea seaward 200 miles as defined in the Presidential Proclamation 5030 of March 10, 1983 (3 CFR, 1983 Comp., p. 22).

[USCG–2012–1049, 78 FR 13491, Feb. 28, 2013]

§151.53 Special areas for Annex V of MARPOL 73/78.

(a) For the purposes of §§151.51 through 151.77, the special areas are the Mediterranean Sea area, the Baltic Sea area, the Black Sea area, the Red Sea area, the Gulfs area, the North Sea area, the Antarctic area, and the Wider Caribbean region, including the Gulf of Mexico and the Caribbean Sea which are described in §151.06.

(b) In accordance with paragraph 3.2 of Regulation 8 of Annex V of MARPOL, the discharge restrictions in §151.71 for special areas will enter into effect when each party to MARPOL whose coastline borders the special area has certified that reception facilities are available and the IMO has established an effective date for each special area. Notice of the effective dates for the discharge requirements in each special area will be published in the FEDERAL REGISTER and reflected in this section.

(c) The discharge restrictions are in effect in the Wider Caribbean Region, the Mediterranean Sea, the Baltic Sea, the North Sea, the Gulfs, and the Antarctic special areas.

[CGD 94–056, 60 FR 43378, Aug. 21, 1995, as amended by USCG–2009–0273, 74 FR 66241, Dec. 15, 2009; USCG–2011–0187, 77 FR 19543, Apr. 2, 2012; USCG–2012–1049, 78 FR 13491, Feb. 28, 2013]

§151.55 Recordkeeping requirements.

(a) The master or person in charge of a ship to which this section applies shall ensure that a written record is maintained on the ship of each of the following garbage discharge or disposal operations:

(1) Discharge to a reception facility or to another ship;

(2) Incineration on the ship;

(3) Discharge into the sea; and/or

(4) Accidental or other exceptional discharges.

(b) When garbage is discharged to a reception facility or to another ship, the record under paragraph (a) of this section must contain the following information:

(1) The date and time of the discharge;

(2) If the operation was conducted at a port, the name of the port;

(3) If the operation was not conducted at a port, the latitude and longitude of the location where the operation was conducted, and if the operation involved off-loading to another ship, the name and official number of the receiving ship;

(4) The categories of garbage involved; and

(5) The estimated amount of each category of garbage discharged, described by volume in cubic meters.

(c) When garbage is incinerated on the ship, the record under paragraph (a) of this section must contain the following information:

(1) The date and time of the starting and stopping of the incineration;

(2) The latitude and longitude of the ship at the starting and stopping of the incineration;

(3) The categories of the garbage involved; and

(4) The estimated amount of each category of garbage involved, described by volume in cubic meters.

(d) When garbage which is allowed into the sea is discharged overboard, the record under paragraph (a) of this section must contain the following information:

(1) The date and time of the discharge;

(2) The latitude and longitude of the ship;

(3) The categories of the garbage involved; and

(4) The estimated amount of each category of garbage involved, described by volume in cubic meters.

(e) For the record under paragraph (a) of this section, the categories of garbage are

(1) Plastics,

(2) Food wastes,

(3) Domestic wastes,

(4) Cooking oil,

(5) Incinerator ashes,

(6) Operational wastes,

(7) Cargo residues,

(8) Animal carcasses, and

(9) Fishing gear.

(f) The record under paragraph (a) of this section must be prepared at the time of the operation, certified as correct by the master or person in charge of the ship, maintained on the ship for 2 years following the operation, and made available for inspection by the Coast Guard.

[USCG–2012–1049, 78 FR 13491, Feb. 28, 2013]

§ 151.57 Garbage management plans.

(a) The master or person in charge of a ship to which this section applies shall ensure that the ship is not operated unless a garbage management plan meeting paragraph (b) of this section is on the ship and that each person handling garbage follows the plan.

(b) Each garbage management plan under paragraph (a) of this section must be in writing and—

(1) Provide for the discharge of garbage by means that meet Annex V of MARPOL, the Act, and §§ 151.51 through 151.77;

(2) Describe procedures for minimizing, collecting, processing, storing, and discharging garbage; and

(3) Designate the person who is in charge of carrying out the plan.

(Approved by the Office of Management and Budget under control number 1625–0072)

[USCG–2012–1049, 78 FR 13492, Feb. 28, 2013]

§ 151.59 Placards.

(a) The master or person in charge of a ship, including a drilling rig or platform, to which this section applies shall ensure that one or more placards meeting the requirements of this section are displayed in prominent locations and in sufficient numbers so that they can be read by the crew and passengers. These locations must be readily accessible to the intended reader and may include embarkation points, food service facilities, garbage handling spaces, living spaces, and common areas on deck. If the Captain of the Port (COTP) determines that the number or location of the placards is insufficient to adequately inform crew and passengers, the COTP may require additional placards and may specify their locations.

(b) Each placard must be at least 20 cm (8 in) wide by 12½ cm (5 in) high, made of a durable material, and legible.

(c) At a minimum, each placard must notify the reader of the operating requirements contained in §§ 151.67 through 151.73 as they apply to that

ship. The following requirements should also be prominently stated:

(1) The discharge of all garbage is prohibited into the navigable waters of the United States and into all other waters except as specifically allowed;

(2) The discharge of all forms of plastic into all waters is prohibited;

(3) A person who violates the above requirements is liable for civil and/or criminal penalties; and

(4) Regional, state, and local restrictions on garbage discharges also may apply.

(d) For ships while operating on the Great Lakes or their connecting or tributary waters, the placard must—

(1) Notify the reader of the information in paragraph (c) of this section; or

(2) Notify the reader of the following:

(i) Except as allowed by § 151.66, the discharge of all garbage into the Great Lakes or their connecting or tributary waters is prohibited; and

(ii) A person who violates the above requirements is liable for a civil penalty for each violation, and the criminal penalties of a class D felony.

[USCG–2012–1049, 78 FR 13492, Feb. 28, 2013]

§ 151.61 Inspection for compliance and enforcement.

While within the navigable waters of the United States or the Exclusive Economic Zone, a ship is subject to inspection by the Coast Guard or other authorized federal agency to determine if—

(a) The ship has been operating in accordance with these regulations and has not discharged plastics or other garbage in violation of the provisions of the Act or Annex V of MARPOL;

(b) Grinders or comminuters used for the discharge of garbage between 3 and 12 nautical miles from nearest land are capable of reducing the size of garbage so that it will pass through a screen with openings no greater than 25 millimeters (one inch);

(c) Information for recordkeeping requirements, when required under § 151.55, is properly and accurately logged;

(d) A garbage management plan, when required under § 151.57, is on board and that the condition of the ship, equipment and operational procedures of the ship meet the plan; and

(e) Placards, when required by § 151.59, are posted on board.

[CGD 88–002, 54 FR 18405, Apr. 28, 1989, as amended by CGD 88–002A, 55 FR 18583, May 2, 1990; USCG–2012–1049, 78 FR 13492, Feb. 28, 2013]

§ 151.63 Shipboard control of garbage.

(a) The master, operator, or person who is in charge of a ship shall ensure that all garbage is discharged ashore or in accordance with §§ 151.66–151.73.

(b) The following factors, among others, may be considered by enforcement personnel in evaluating compliance with §§ 151.51 through 151.77:

(1) Records, including receipts, of garbage discharges at port reception facilities.

(2) Records under § 151.55 or log entries of garbage discharges.

(3) The presence and operability of equipment to treat ship-generated garbage, including, but not limited to, incinerators, grinders, or comminuters.

(4) The presence of and adherence to a written shipboard garbage management plan.

(5) The absence of plastics in ship stores.

(6) Ongoing educational programs to train shipboard personnel of garbage handling procedures and the need for these.

(7) The presence of shipboard spaces used for collecting, processing, storing and discharging ship-generated garbage.

(c) The master, operator, or person who is in charge of a ship shall ensure that if garbage is transported from a ship by shipboard personnel, it is properly deposited into a port or terminal's reception facility.

[CGD 88–002, 54 FR 18405, Apr. 28, 1989, as amended by CGD 88–002A, 55 FR 18583, May 2, 1990; CGD 92–71, 59 FR 18703, Apr. 19, 1994; USCG–2012–1049, 78 FR 13492, Feb. 28, 2013]

§ 151.65 Reporting requirements.

The master or person who is in charge of each oceangoing ship shall notify the port or terminal, at least 24 hours before entering the port or terminal, of the name of the ship and the estimated volume of garbage requiring disposal, if any of the following types of garbage are to be discharged:

(a) Garbage regulated by the Animal and Plant Health Inspection Service (APHIS) of the U.S. Department of Agriculture under 7 CFR 330.400 or 9 CFR 94.5;

(b) Medical wastes; or

(c) Hazardous wastes defined in 40 CFR 261.3.

[CGD 88–002, 54 FR 18405, Apr. 28, 1989, as amended by USCG–2012–1049, 78 FR 13492, Feb. 28, 2013]

§ 151.66 Operating requirements: Discharge of garbage in the Great Lakes and other navigable waters.

(a) Except as otherwise provided in this section, no person on board any ship may discharge garbage into the navigable waters of the United States. Cleaning agents or additives contained in deck and external surface wash water may be discharged only if these substances are not harmful to the marine environment.

(b)(1) On the U.S. waters of the Great Lakes, commercial vessels may discharge bulk dry cargo residues in accordance with and subject to the conditions imposed by this paragraph.

(2) As used in this paragraph and in paragraph (c) of this section—

Apostle Islands National Lakeshore means the site on or near Lake Superior administered by the National Park Service, less Madeline Island, and including the Wisconsin shoreline of Bayfield Peninsula from the point of land at 46°57′19.7″ N. 090°52′51.0″ W southwest along the shoreline to a point of land at 46°52′56.4″ N. 091°3′3.1″ W.

Broom clean means a condition in which the vessel's deck shows that care has been taken to prevent or eliminate any visible concentration of bulk dry cargo residues, so that any remaining bulk dry cargo residues consist only of dust, powder, or isolated and random pieces, none of which exceeds 1 inch in diameter.

Bulk dry cargo residues means nonhazardous and non-toxic residues, regardless of particle size, of dry cargo carried in bulk, including limestone and other clean stone, iron ore, coal, salt, and cement. It does not include residues of any substance known to be toxic or hazardous, such as nickel, copper, zinc, lead, or materials classified as hazardous in provisions of law or treaty.

Caribou Island and Southwest Bank Protection Area means the area enclosed by rhumb lines connecting the following coordinates, beginning on the northernmost point and proceeding clockwise:

47°30.0′ N, 085°50.0′ W
47°24.2′ N, 085°38.5′ W
47°04.0′ N, 085°49.0′ W
47°05.7′ N, 085°59.0′ W
47°18.1′ N, 086°05.0′ W.

Commercial vessel means a commercial vessel loading, unloading, or discharging bulk dry cargo in the U.S. waters of the Great Lakes, or a U.S. commercial vessel transporting bulk dry cargo and operating anywhere on the Great Lakes; but the term does not include a non-self-propelled barge unless it is part of an integrated tug and barge unit.

Comparable characteristics, cargoes, and operations means similar vessel design, size, age, crew complement, cargoes, operational routes, deck and hold configuration, and fixed cargo transfer equipment configuration.

Detroit River International Wildlife Refuge means the U.S. waters of the Detroit River bound by the area extending from the Michigan shore at the southern outlet of the Rouge River to 41°54.0′ N., 083°06.0′ W. along the U.S.-Canada boundary southward and clockwise connecting points:

42°02.0′ N, 083°08.0′ W
41°54.0′ N, 083°06.0′ W
41°50.0′ N, 083°10.0′ W
41°44.52′ N, 083°22.0′ W
41°44.19′ N, 083°27.0′ W.

Dry cargo residue (or DCR) management plan means the plan required by paragraph (b)(5) of this section.

Grand Portage National Monument means the site on or near Lake Superior, administered by the National Park Service, from the southwest corner of the monument point of land at 47°57.521′ N 089°41.245′ W. to the northeast corner of the monument point of land, 47°57.888′ N 089°40.725′ W.

Indiana Dunes National Lakeshore means the site on or near Lake Michigan, administered by the National Park Service, from a point of land near Gary, Indiana at 41°42′59.4″ N 086°54′59.9″

W eastward along the shoreline to 41°37′08.8″N 087°17′18.8″ W near Michigan City, Indiana.

Industry standard practices means practices that ensure the proper installation, maintenance, and operation of shipboard cargo transfer and DCR removal equipment, proper crew training in DCR minimization procedures and cargo transfer operations, and proper supervision of cargo transfer operations to minimize DCR accumulation on or in a commercial vessel.

Integrated tug and barge unit means any tug-barge combination which, through the use of special design features or a specially designed connection system, has increased sea-keeping capabilities relative to a tug and barge in the conventional pushing mode.

Isle Royale National Park means the site on or near Lake Superior, administered by the National Park Service, where the boundary includes any submerged lands within the territorial jurisdiction of the United States within 4½ miles of the shoreline of Isle Royale and the surrounding islands, including Passage Island and Gull Island.

Mile means a statute mile.

Milwaukee Mid-Lake Special Protection Area means the area enclosed by rhumb lines connecting the following coordinates, beginning on the northernmost point and proceeding clockwise:

43°27.0′ N 087°14.0′ W
43°21.2′ N, 087°02.3′ W
43°03.3′ N, 087°04.8′ W
42°57.5′ N, 087°21.0′ W
43°16.0′ N, 087°39.8′ W.

Minimization means the reduction, to the greatest extent practicable, of any bulk dry cargo residue discharge from the vessel.

Northern Refuge means the area enclosed by rhumb lines connecting the coordinates, beginning on the northernmost point and proceeding clockwise:

45°45.0′ N, 086°00.0′ W,

western shore of High Island, southern shore of Beaver Island:

45°30.0′ N, 085°30.0′ W
45°30.0′ N, 085°15.0′ W
45°25.0′ N, 085°15.0′ W
45°25.0′ N, 085°20.0′ W
45°20.0′ N, 085°20.0′ W
45°20.0′ N, 085°40.0′ W
45°15.0′ N. 085°40.0′ W
45°15.0′ N, 085°50.0′ W
45°10.0′ N, 085°50.0′ W
45°10.0′ N, 086°00.0′ W.

Pictured Rocks National Lakeshore means the site on or near Lake Superior, administered by the National Park Service, from a point of land at 46°26′21.3″ N 086°36′43.2″ W eastward along the Michigan shoreline to 46°40′22.2″ N 085°59′58.1″ W.

Six Fathom Scarp Mid-Lake Special Protection Area means the area enclosed by rhumb lines connecting the following coordinates, beginning on the northernmost point and proceeding clockwise:

44°55.0′ N, 082°33.0′ W
44°47.0′ N, 082°18.0′ W
44°39.0′ N, 082°13.0′ W
44°27.0′ N, 082°13.0′ W
44°27.0′ N, 082°20.0′ W
44°17.0′ N, 082°25.0′ W
44°17.0′ N, 082°30.0′ W
44°28.0′ N, 082°40.0′ W
44°51.0′ N, 082°44.0′ W
44°53.0′ N, 082°44.0′ W
44°54.0′ N, 082°40.0′ W.

Sleeping Bear Dunes National Lakeshore means the site on or near Lake Michigan, administered by the National Park Service, that includes North Manitou Island, South Manitou Island and the Michigan shoreline from a point of land at 44°42′45.1″ N, 086°12′18.1″ W north and eastward along the shoreline to 44°57′12.0″ N, 085°48′12.8″ W.

Stannard Rock Protection Area means the area within a 6-mile radius from Stannard Rock Light, at 47°10′57″ N 087°13′34″ W.

Superior Shoal Protection Area means the area within a 6-mile radius from the center of Superior Shoal, at 48°03.2′ N 087°06.3′ W.

Thunder Bay National Marine Sanctuary means the site on or near Lake Huron designated by the National Oceanic and Atmospheric Administration as the boundary that forms an approximately rectangular area by extending along the ordinary high water mark between the northern and southern boundaries of Alpena County, cutting across the mouths of rivers and streams, and lakeward from those points along latitude lines to longitude 83 degrees west. The coordinates of the boundary are:

45°12'25.5′ N, 083°23'18.6′ W
45°12'25.5′ N, 083°00'00′ W
44°51'30.5′ N, 083°00'00′ W
44°51'30.5′ N, 083°19'17.3′ W.

Waukegan Special Protection Area means the area enclosed by rhumb lines connecting the following coordinates, beginning on the northernmost point and proceeding clockwise:

42°24.3′ N, 087°29.3′ W
42°13.0′ N, 087°25.1′ W
42°12.2′ N, 087°29.1′ W
42°18.1′ N, 087°33.1′ W
42°24.1′ N, 087°32.0′ W.

Western Basin means that portion of Lake Erie west of a line due south from Point Pelee.

(3) Discharges of bulk dry cargo residue under paragraph (b) of this section are allowed, subject to the conditions listed in Table 151.66(b)(3) of this section.

TABLE 151.66(B)(3)—BULK DRY CARGO RESIDUE DISCHRGES ALLOWED ON THE GREAT LAKES

Location	Cargo	Discharge allowed except as noted
Tributaries, their connecting rivers, and the St. Lawrence River.	Limestone and other clean stone.	Prohibited within 3 miles from shore.
	All other cargoes	Prohibited.
Lake Ontario	Limestone and other clean stone.	Prohibited within 3 miles from shore.
	Iron ore	Prohibited within 6 miles from shore.
	All other cargoes	Prohibited within 13.8 miles from shore.
Lake Erie	Limestone and other clean stone.	Prohibited within 3 miles from shore; prohibited in the Detroit River International Wildlife Refuge; prohibited in Western Basin, except that a vessel operating exclusively within Western Basin may discharge limestone or clean stone cargo residues over the dredged navigation channels between Toledo Harbor Light and Detroit River Light.
	Iron ore	Prohibited within 6 miles from shore; prohibited in the Detroit River International Wildlife Refuge; prohibited in Western Basin, except that a vessel may discharge residue over the dredged navigation channels between Toledo Harbor Light and Detroit River Light if it unloads in Toledo or Detroit and immediately thereafter loads new cargo in Toledo, Detroit, or Windsor.
	Coal, salt	Prohibited within 13.8 miles from shore; prohibited in the Detroit River International Wildlife Refuge; prohibited in Western Basin, except that a vessel may discharge residue over the dredged navigation channels between Toledo Harbor Light and Detroit River Light if it unloads in Toledo or Detroit and immediately thereafter loads new cargo in Toledo, Detroit, or Windsor.
	All other cargoes	Prohibited within 13.8 miles from shore; prohibited in the Detroit River International Wildlife Refuge; prohibited in Western Basin.
Lake St. Clair	Limestone and other clean stone.	Prohibited within 3 miles from shore.
	All other cargoes	Prohibited.
Lake Huron, except Six Fathom Scarp Mid-Lake Special Protection Area.	Limestone and other clean stone.	Prohibited within 3 miles from shore; prohibited in the Thunder Bay National Marine Sanctuary.
	Iron ore	Prohibited within 6 miles from shore and in Saginaw Bay; prohibited in the Thunder Bay National Marine Sanctuary; prohibited for vessels upbound along the Michigan thumb as follows: (a) Between 5.8 miles northeast of entrance buoys 11 and 12 to the track line turn abeam of Harbor Beach, prohibited within 3 miles from shore. (b) For vessels bound for Saginaw Bay only, between the track line turn abeam of Harbor Beach and 4 nautical miles northeast of Point Aux Barques Light, prohibited within 4 miles from shore and not less than 10 fathoms of depth.
	Coal, salt	Prohibited within 13.8 miles from shore and in Saginaw Bay; prohibited in the Thunder Bay National Marine Sanctuary; prohibited for vessels upbound from Alpena into ports along the Michigan shore south of Forty Mile Point within 4 miles from shore and not less than 10 fathoms of depth.
	All other cargoes	Prohibited within 13.8 miles from shore and in Saginaw Bay; prohibited in the Thunder Bay National Marine Sanctuary.

TABLE 151.66(B)(3)—BULK DRY CARGO RESIDUE DISCHRGES ALLOWED ON THE GREAT LAKES—Continued

Location	Cargo	Discharge allowed except as noted
Lake Michigan	Limestone and other clean stone.	Prohibited within 3 miles from shore; prohibited within the Milwaukee Mid-Lake and Waukegan Special Protection Areas; prohibited within the Northern Refuge; prohibited within 3 miles of the shore of the Indiana Dunes and Sleeping Bear National Lakeshores; prohibited within Green Bay.
	Iron ore	Prohibited in the Northern Refuge; north of 45° N., prohibited within 12 miles from shore and in Green Bay; south of 45° N., prohibited within 6 miles from shore, and prohibited within the Milwaukee Mid-Lake and Waukegan Special Protection Areas, in Green Bay, and within 3 miles of the shore of Indiana Dunes and Sleeping Bear National Lakeshores; except that discharges are allowed at: (a) 4.75 miles off Big Sable Point Betsie, along established Lake Carriers Association (LCA) track lines; and (b) Along 056.25° LCA track line between due east of Poverty Island to a point due south of Port Inland Light.
	Coal	Prohibited in the Northern Refuge; prohibited within 13.8 miles from shore and prohibited within the Milwaukee Mid-Lake and Waukegan Special Protection Areas, in Green Bay, and within 3 miles of the shore of Indiana Dunes and Sleeping Bear National Lakeshores; except that discharges are allowed— (a) Along 013.5° LCA track line between 45° N. and Boulder Reef, and along 022.5° LCA track running 23.25 miles between Boulder Reef and the charted position of Red Buoy #2; (b) Along 037° LCA track line between 45°20′ N. and 45°42′ N.; (c) Along 056.25° LCA track line between points due east of Poverty Island to a point due south of Port Inland Light; and (d) At 3 miles from shore for coal carried between Manistee and Ludington along customary routes.
	Salt	Prohibited in the Northern Refuge; prohibited within 13.8 miles from shore and prohibited within the Milwaukee Mid-Lake and Waukegan Special Protection Areas, in Green Bay, and within 3 miles of the shore of Indiana Dunes and Sleeping Bear National Lakeshores, and in Green Bay.
	All other cargoes	Prohibited in the Northern Refuge; prohibited within 13.8 miles from shore and prohibited within the Milwaukee Mid-Lake and Waukegan Special Protection Areas, in Green Bay, and within 3 miles of the shore of Indiana Dunes and Sleeping Bear National Lakeshores.
Lake Superior	Limestone and other clean stone.	Prohibited within 3 miles from shore; and prohibited within Isle Royale National Park and the Caribou Island and Southwest Bank, Stannard Rock, and Superior Shoal Protection Areas, and within 3 miles of the shore of the Apostle Islands and Pictured Rocks National Lakeshores or the Grand Portage National Monument.
	Iron ore	Prohibited within 6 miles from shore (within 3 miles off northwestern shore between Duluth and Grand Marais); and prohibited within Isle Royale National Park and the Caribou Island and Southwest Bank, Stannard Rock, and Superior Shoal Protection Areas, and within 3 miles of the shore of the Apostle Islands and Pictured Rocks National Lakeshores or the Grand Portage National Monument.
	Coal, salt	Prohibited within 13.8 miles from shore (within 3 miles off northwestern shore between Duluth and Grand Marais); and prohibited within Isle Royale National Park and the Caribou Island and Southwest Bank, Stannard Rock, and Superior Shoal Protection Areas, and within 3 miles of the shore of the Apostle Islands and Pictured Rocks National Lakeshores or the Grand Portage National Monument.

TABLE 151.66(B)(3)—BULK DRY CARGO RESIDUE DISCHRGES ALLOWED ON THE GREAT LAKES—Continued

Location	Cargo	Discharge allowed except as noted
	Cement	Prohibited within 13.8 miles from shore (within 3 miles offshore west of a line due north from Bark Point); and prohibited within Isle Royale National Park and the Caribou Island and Southwest Bank, Stannard Rock, and Superior Shoal Protection Areas, and within 3 miles of the shore of the Apostle Islands and Pictured Rocks National Lakeshores or the Grand Portage National Monument.
	All other cargoes	Prohibited within 13.8 miles from shore; and prohibited within Isle Royale National Park and the Caribou Island and Southwest Bank, Stannard Rock, and Superior Shoal Protection Areas, and within 3 miles of the shore of the Apostle Islands and Pictured Rocks National Lakeshores or the Grand Portage National Monument.

(4) The master, owner, operator, or person in charge of any commercial vessel must ensure that the vessel's deck is kept broom clean whenever the vessel is in transit.

(5) The master, owner, operator, or person in charge of any commercial vessel must ensure that a dry cargo residue management plan is on board the vessel, is kept available for Coast Guard inspection, and that all operations are conducted in accordance with the plan. A waste management plan meeting the requirements of 33 CFR 151.57 satisfies this requirement, so long as it provides all the information required by this paragraph (b)(5). If the plan is maintained electronically, at least one paper copy of the plan must be on board for use during inspections. The plan must describe the specific measures the vessel employs to ensure the minimization of bulk dry cargo residue discharges, and, at a minimum, must list or describe—

(i) Equipment on board the vessel that is designed to minimize bulk dry cargo spillage during loading and unloading;

(ii) Equipment on board the vessel that is available to recover spilled cargo from the decks and transfer tunnels and return it to the holds or to unloading conveyances;

(iii) Operational procedures employed by the vessel's crew during the loading or unloading of bulk dry cargoes to minimize cargo spillage onto the decks and into the transfer tunnels and to achieve and maintain the broom clean deck condition required by paragraph (b)(4) of this section;

(iv) Operational procedures employed by the vessel's crew during or after loading or unloading operations to return spilled bulk dry cargo residue to the vessel's holds or to shore via an unloading conveyance;

(v) How the vessel's owner or operator ensures that the vessel's crew is familiar with any operational procedures described by the plan;

(vi) The position title of the person on board who is in charge of ensuring compliance with procedures described in the plan;

(vii) Any arrangements between the vessel and specific ports or terminals for the unloading and disposal of the vessel's bulk dry cargo residues ashore; and

(viii) The procedures used and the vessel's operating conditions to be maintained during any unavoidable discharge of bulk dry cargo residue into the Great Lakes.

(6) In determining whether a commercial vessel or person is in compliance with paragraph (b) of this section, Coast Guard personnel may consider—

(i) The extent to which the procedures described in the vessel's DCR management plan reflect current industry standard practices for vessels of comparable characteristics, cargoes, and operations;

(ii) The crew's demonstrated ability to perform tasks for which the DCR management plan holds them responsible;

(iii) Whether equipment described in the DCR management plan is maintained in proper operating condition; and

(iv) The extent to which the crew adheres to the vessel's DCR management plan during actual dry cargo loading and unloading operations and DCR discharge operations.

(c)(1) The master, owner, operator, or person in charge of any commercial ship loading, unloading, or discharging bulk dry cargo in the United States' waters of the Great Lakes and the master, owner, operator, or person in charge of a U.S. commercial ship transporting bulk dry cargo and operating anywhere on the Great Lakes, excluding non-self propelled barges that are not part of an integrated tug and barge unit, must ensure that a written record is maintained on the ship that fully and accurately records information on:

(i) Each loading or unloading operation on the United States' waters of the Great Lakes, or in the case of U.S. commercial ships on any waters of the Great Lakes, involving bulk dry cargo; and

(ii) Each discharge of bulk dry cargo residue that takes place in United States' waters of the Great Lakes, or in the case of U.S. commercial ships on any waters of the Great Lakes.

(2) For each loading or unloading operation, the record must describe:

(i) The date of the operation;

(ii) Whether the operation involved loading or unloading;

(iii) The name of the loading or unloading facility;

(iv) The type of bulk dry cargo loaded or unloaded;

(v) The method or methods used to control the amount of bulk dry cargo residue, either onboard the ship or at the facility;

(vi) The time spent to implement methods for controlling the amount of bulk dry cargo residue; and

(vii) The estimated volume of bulk dry cargo residue created by the loading or unloading operation that is to be discharged.

(3) For each discharge, the record must describe:

(i) The date and time the discharge started, and the date and time the discharge ended;

(ii) The ship's position, in latitude and longitude, when the discharge started and when the discharge ended; and

(iii) The ship's speed during the discharge.

(iv) Until February 28, 2015, records must be kept on Coast Guard Form CG–33, which can be found at *http://www.uscg.mil/hq/cg5/cg522/cg5224/dry_cargo.asp*. Copies of the records must be forwarded to the Coast Guard at least once each quarter, no later than the 15th day of January, April, July, and October. The record copies must be provided to the Coast Guard using only one of the following means:

(A) Email to DCRRecordkeeping@USCG.mil;

(B) Fax to 202–372–1928, ATTN: DCR RECORDKEEPING; or

(C) Mail to U.S. Coast Guard: Commandant (CG–OES), ATTN: DCR RECORDKEEPING, 2703 Martin Luther King Jr. Avenue SE., Stop 7126, Washington, DC 20593–7126.

(v) After February 28, 2015, the use of Form CG–33 is optional. However, records must still be certified by the master, owner, operator, or person in charge; must be kept in written form on board the ship for at least 2 years; and must be made available for Coast Guard inspection upon request.

[USCG–2004–19621, 79 FR 5279, Jan. 31, 2014]

§ 151.67 Operating requirements: Discharge of plastic prohibited.

No person on board any ship may discharge into the sea, or into the navigable waters of the United States, plastic or garbage mixed with plastic, including, but not limited to, synthetic ropes, synthetic fishing nets, and plastic garbage bags. All garbage containing plastics requiring disposal must be discharged ashore or incinerated.

[CGD 88–002, 54 FR 18405, Apr. 28, 1989, as amended by CGD 88–002A, 55 FR 18583, May 2, 1990]

§ 151.69 Operating requirements: Discharge of garbage outside special areas.

(a) Except for ships operating in the Great Lakes which must comply with section 151.66, when a ship is operating outside of a special area specified in § 151.53, no person may discharge garbage into the sea, except as allowed in paragraphs (b) through (d) of this section.

(b) The following allowed discharges of garbage shall only be conducted while the ship is en route and as far as practicable from the nearest land, but never less than—

(1) 12 nautical miles for food wastes, except that, such food wastes may be discharged outside of 3 nautical miles from nearest land after they have been processed with a grinder or comminuter specified in § 151.75;

(2) 12 nautical miles for cargo residues that cannot be recovered using commonly available methods for unloading. The discharged cargo residues must not be harmful to the marine environment; and

(3) 100 nautical miles and the maximum water depth possible for animal carcasses. Discharge shall be conducted in accordance with the applicable International Maritime Organization guidelines.

(c) Cleaning agents or additives contained in cargo hold, deck, and external surfaces wash water may be discharged only if these substances are not harmful to the marine environment.

(d) Mixtures of garbage having different discharge requirements must be:

(1) Retained on board for later disposal ashore; or

(2) Discharged in accordance with the more stringent requirement prescribed by paragraphs (a) through (c) of this section.

[USCG–2012–1049, 78 FR 13492, Feb. 28, 2013]

§ 151.71 Operating requirements: Discharge of garbage within special areas.

(a) When a ship is located within a special area referenced in § 151.53 of this part, no person may discharge garbage into the water, except as allowed in this section.

(b) Food wastes shall only be discharged while the ship is en route and—

(1) As far as practicable from the nearest land or nearest ice shelf, but not less than 12 nautical miles from the nearest land or nearest ice shelf;

(2) After having been processed with a grinder or comminuter specified in § 151.75; and

(3) Not contaminated by any other garbage type.

(4) The discharge of introduced avian products, including poultry and poultry parts, is not permitted in the Antarctic area unless it has been treated to be made sterile.

(c) Cargo residues that cannot be recovered using commonly available methods for unloading may be discharged where all the following conditions are satisfied:

(1) The cargo residues, cleaning agents or additives contained in the cargo hold washing water do not contain any substances that are harmful to the marine environment.

(2) Both the port of departure and the next port of destination must be within the special area and the ship will not transit outside of the special area when moving between those ports.

(3) No adequate reception facilities are available at those ports.

(4) When the conditions of paragraphs (c)(1) through (c)(3) of this section have been fulfilled, discharge of cargo hold washing water containing residues shall be made as far as practicable from the nearest land or the nearest ice shelf and not less than 12 nautical miles from the nearest land or the nearest ice shelf.

(d) Cleaning agents or additives contained in deck and external surfaces wash water may be discharged only if those substances are not harmful to the marine environment.

(e) Mixtures of garbage having different discharge requirements must be:

(1) Retained on board for later disposal ashore; or

(2) Discharged in accordance with the more stringent requirement prescribed by paragraphs (b) through (d) of this section.

[USCG–2012–1049, 78 FR 13492, Feb. 28, 2013]

§ 151.73 Operating requirements: Discharge of garbage from fixed or floating platforms.

(a) Except as allowed in paragraph (b) of this section, no person may discharge garbage from—

(1) A fixed or floating platform engaged in the exploration, exploitation or associated offshore processing of seabed mineral resources; or

(2) Any ship within 500 meters (1650 feet) of such platforms.

(b) Food waste may be discharged into the surrounding waters from a ship or fixed or floating platform regulated by paragraph (a) of this section if—

(1) It is processed with a grinder or comminuter meeting the standards in § 151.75; and

(2) That ship or fixed or floating drilling rig or platform is beyond 12 nautical miles from nearest land.

[CGD 88–002, 54 FR 18405, Apr. 28, 1989, as amended by USCG–2012–1049, 78 FR 13493, Feb. 28, 2013]

§ 151.75 Grinders or comminuters.

Each grinder or comminuter used to discharge garbage in accordance with § 151.69(b)(1), § 151.71(b)(2), or § 151.73(b)(1), must be capable of processing garbage so that it passes through a screen with openings no greater than 25 millimeters (one inch).

[CGD 88–002, 54 FR 18405, Apr. 28, 1989, as amended by USCG–2012–1049, 78 FR 13493, Feb. 28, 2013]

§ 151.77 Exceptions for emergencies and health risks.

Sections 151.67, 151.69, 151.71, and 151.73 do not apply to the following:

(a) Discharges of garbage from a ship necessary for the purpose of securing the safety of a ship and those on board or saving life at sea.

(b) The accidental loss of garbage resulting from damage to a ship or its equipment, provided that all reasonable precautions have been taken before and after the occurrence of the damage, to prevent or minimize the accidental loss.

(c) The accidental loss of fishing gear from a ship, provided all reasonable precautions have been taken to prevent such loss.

(d) The discharge of fishing gear from a ship for the protection of the marine environment or for the safety of that ship or its crew.

(e) The en route requirements of §§ 151.69 and 151.71 do not apply to the discharge of food wastes when it is clear the retention on board of these food wastes present an imminent health risk to the people on board.

[USCG–2012–1049, 78 FR 13493, Feb. 28, 2013]

§ 151.79 Operating requirements: Discharge of sewage within Antarctica.

(a) A vessel certified to carry more than 10 persons must not discharge untreated sewage into the sea within 12 nautical miles of Antarctic land or ice shelves; beyond such distance, sewage stored in a holding tank must not be discharged instantaneously but at a moderate rate and, where practicable, while the ship is en route at a speed of no less than 4 knots. For purposes of this section, ''sewage'' means:

(1) Drainage and other wastes from any form of toilets, urinals, and WC scuppers;

(2) Drainage from medical premises (dispensary, sick bay, etc.) via wash basins, wash tubs, and scuppers located in such premises;

(3) Drainage from spaces containing living animals; or

(4) Other waste waters when mixed with the drainages defined above.

(b) Paragraph (a) of this section does not apply to a warship, naval auxiliary, or other ship owned or operated by the United States and used only in government non-commercial service.

(c) Paragraph (a) of this section does not apply in cases of an emergency relating to the safety of a ship and those on board or saving life at sea. Notice of an activity, otherwise prohibited under paragraph (a) of this section, undertaken in case of an emergency shall be reported immediately to the National Response Center (NRC) *toll free telephone number*: 800–424–8802, *direct telephone:* 202–267–2675, or *Fax:* 202–267–1322.

[CGD 97–015, 62 FR 18045, Apr. 14, 1997, as amended by USCG–2008–0179, 73 FR 35014, June 19, 2008]

Subpart B—Transportation of Municipal and Commercial Waste

AUTHORITY: 33 U.S.C. 2602; 49 CFR 1.46.

SOURCE: CGD 89–014, 54 FR 22548, May 24, 1989, unless otherwise noted.

§ 151.1000 Purpose.

The purpose of this subpart is to implement the permit provisions of the

Shore Protection Act of 1988, (33 U.S.C. 2601 *et seq.*).

[CGD 89–014, 54 FR 22548, May 24, 1989, as amended by USCG–2001–9286, 66 FR 33641, June 25, 2001]

§ 151.1003 Applicability.

(a) Except as provided by paragraph (b) of this section, this subpart applies to each vessel whose purpose is the transportation of municipal or commercial waste in coastal waters.

(b) This subpart does not apply to public vessels.

§ 151.1006 Definitions.

As used in this subpart—

Coastal waters means—

(1) The territorial sea of the United States;

(2) The Great Lakes and their connecting waters;

(3) The marine and estuarine waters of the United States up to the head of tidal influence; and

(4) The Exclusive Economic Zone as established by Presidential Proclamation Number 5030, dated March 10, 1983.

NOTE: The Exclusive Economic Zone extends from the baseline of the territorial sea of the United States seaward 200 miles.

Municipal and commercial waste means solid waste as defined in section 1004 of the Solid Waste Disposal Act (42 U.S.C. 6903) except—

(1) Solid waste identified and listed under section 3001 of the Solid Waste Disposal Act (42 U.S.C. 6921);

(2) Waste generated by a vessel during normal operations;

(3) Debris solely from construction activities;

(4) Sewage sludge subject to regulation under title I of the Marine Protection, Research, and Sanctuaries Act of 1972 (33 U.S.C. 1401 *et seq.*); and

(5) Dredge or fill material subject to regulation under title I of the Marine Protection, Research and Sanctuaries Act of 1972 (33 U.S.C. 1401 *et seq.*), the Federal Water Pollution Control Act (33 U.S.C. 1251 *et seq.*), or the Rivers and Harbors Appropriation Act of 1899 (33 U.S.C. 401 *et seq.*).

Public vessel means a vessel that—

(1) Is owned, or demise chartered, and operated by the United States Government or a government of a foreign country; and

(2) Is not engaged in commercial service.

Vessel means every description of watercraft or other artifical contrivance used, or capable of being used, as a means of transportation on water.

[CGD 89–014, 54 FR 22548, May 24, 1989, as amended by USCG–2001–9286, 66 FR 33641, June 25, 2001]

§ 151.1009 Transportation of municipal or commercial waste.

A vessel may not transport municipal or commercial waste in coastal waters without—

(a) A conditional permit to transport municpal or commercial waste issued under this subpart; and

(b) Displaying a number in accordance with § 151.1024.

[CGD 89–014, 54 FR 22548, May 24, 1989; CGD 89–014, 54 FR 24078, June 5, 1989]

§ 151.1012 Applying for a conditional permit.

(a) The owner or operator of each vessel to which this subpart applies shall apply by letter for a conditional permit required by § 151.1009. Applications must be submitted to Commandant (CG–5431), U.S. Coast Guard Headquarters, 2100 2nd St., SW., Stop 7581, Washington, DC 20593–7581, Attn: Shore Protection Act Desk and include the following:

(1) The name, address, and telephone number of the vessel owner and operator.

(2) The vessel's name and official number, if any.

(3) The vessel's area of operation.

(4) The vessel's transport capacity.

(5) A history of the types of cargo transported by the vessel during the previous year, including identifying the type of municipal or commercial waste transported as—

(i) Municipal waste;

(ii) Commercial waste;

(iii) Medical waste; or

(iv) Waste of another character.

(6) The types of cargo to be transported by the vessel during the effective period of the conditional permit, including identifying the type of municipal or commercial waste as it is identified in paragraphs (a)(5)(i) through (iv) of this section.

(7) A statement of whether the application for a conditional permit is for a single voyage, a short term operation or a continuing operation. If the application is for a single voyage or a short term operation, the statement must include the duration of the voyage or operation.

(8) An acknowledgment that certifies as to the truthfulness and accuracy of the information provided.

(b) The owner or operator under paragraph (a) of this section shall provide any additional information the Coast Guard may require.

[CGD 89–014, 54 FR 22548, May 24, 1989, as amended by CGD 96–026, 61 FR 33665, June 28, 1996; USCG–2008–0179, 73 FR 35014, June 19, 2008; USCG–2010–0351, 75 FR 36284, June 25, 2010]

§ 151.1015 Issuing or denying the issuance of a conditional permit.

(a) After reviewing the application made under § 151.1012, the Coast Guard either—

(1) Issues the conditional permit for a vessel under this section; or

(2) Denies the issuance of the conditional permit to the vessel in accordance with paragraph (c) of this section. On denying the issuance of the permit, the Coast Guard notifies the applicant of the—

(i) Denial and the reason for the denial; and

(ii) Procedures under § 151.1021 for appealing the denial.

(b) Each conditional permit issued under this section is effective—

(1) On the date it is issued; and

(2) Until the expiration date stated on the conditional permit unless it is—

(i) Withdrawn under § 151.1018;

(ii) Terminated because—

(A) The vessel is sold; or

(B) This subpart no longer applies to the vessel.

(c) The Coast Guard may deny the issuance of a conditional permit if—

(i) The application does not contain the information required under § 151.1012; or

(ii) There is reason to believe that the information contained on the application is not true and correct.

§ 151.1018 Withdrawal of a conditional permit.

(a) The Coast Guard may withdraw a conditional permit if the Administrator of the EPA requests withdrawal because the Administrator has determined that the owner or operator of the vessel has a record or a pattern of serious violations of—

(1) Subtitle A of the Shore Protection Act of 1988 (33 U.S.C. 2601 *et seq.*);

(2) The Solid Waste Disposal Act (42 U.S.C. 6901 *et seq.*);

(3) The Marine Protection, Research, and Sanctuaries Act of 1972 (33 U.S.C. 1401 *et seq.*);

(4) The Rivers and Harbors Appropriations Act of 1899 (33 U.S.C. 1401 *et seq.*); or

(5) The Federal Water Pollution Control Act (33 U.S.C. 1251 *et seq.*).

(b) Upon reaching a determination to withdraw a conditional permit, the Coast Guard notifies the owner or operator of—

(1) The withdrawal and the reason for the withdrawal;

(2) The procedures for appealing the withdrawal.

(c) After receiving the notice under paragraph (b) of this section, the owner or operator shall ensure that—

(1) The vessel immediately ceases transporting municipal or commercial waste and the marking required by § 151.1024 is removed; and

(2) The conditional permit is returned to the Coast Guard within 5 days after receiving the notice.

§ 151.1021 Appeals.

(a) Any person directly affected by an action taken under this subpart may request reconsideration by the Coast Guard officer responsible for that action.

(b) The person affected who is not satisfied with a ruling after having it reconsidered under paragraph (a) of this section may—

(1) Appeal that ruling in writing within 30 days after the ruling to the Assistant Commandant for Marine Safety, Security, and Stewardship (CG–5), U.S. Coast Guard Headquarters, 2100 2nd St., SW., Stop 7355, Washington, DC 20593–7355; and

(2) Supply supporting documentation and evidence that the appellant wishes to have considered.

(c) After reviewing the appeal submitted under paragraph (b) of this section, the Assistant Commandant for Marine Safety, Security and Environmental Protection issues a ruling which is final agency action.

(d) If the delay in presenting a written appeal has an adverse impact on the operations of the appellent, the appeal under paragraph (b) of this section—

(1) May be presented orally; and

(2) Must be submitted in writing within five days after the oral presentation—

(i) With the basis for the appeal and a summary of the material presented orally; and

(ii) To the same Coast Guard official who heard the oral presentation.

[CGD 89–014, 54 FR 22548, May 24, 1989, as amended by CGD 96–026, 61 FR 33665, June 28, 1996; CGD 97–023, 62 FR 33363, June 19, 1997; USCG–2002–12471, 67 FR 41332, June 18, 2002; USCG–2008–0179, 73 FR 35014, June 19, 2008; USCG–2010–0351, 75 FR 36284, June 25, 2010]

§ 151.1024 Display of number.

(a) The owner or operator of each vessel under this subpart must ensure that the vessel number stated on the conditional permit issued under § 151.1015 is displayed so that it—

(1) Is clearly legible;

(2) Has a contrasting background;

(3) Is readily visible from either side of the vessel; and

(4) Is in block figures that are at least 18 inches in height.

(b) No person may tamper with or falsify a number required under this section.

Subpart C—Ballast Water Management for Control of Nonindigenous Species in the Great Lakes and Hudson River

AUTHORITY: 16 U.S.C. 4711; Department of Homeland Security Delegation No. 0170.1.

SOURCE: CGD 91–066, 58 FR 18334, Apr. 8, 1993, unless otherwise noted.

§ 151.1500 Purpose.

The purpose of this subpart is to implement the provisions of the Nonindigenous Aquatic Nuisance Prevention and Control Act of 1990 (16 U.S.C. 4701 *et seq.*).

§ 151.1502 Applicability.

This subpart applies to all non-recreational vessels, U.S. and foreign, that are equipped with ballast tanks that, after operating on the waters beyond the Exclusive Economic Zone during any part of its voyage, enter the Snell Lock at Massena, New York, or navigates north of the George Washington Bridge on the Hudson River, regardless of other port calls in the United States or Canada during that voyage, except as expressly provided in 33 CFR 151.2015(a). All vessels subject to this subpart are also required to comply with the applicable requirements of 33 CFR 151.2050, 151.2060, and 151.2070.

[USCG–2001–10486, 77 FR 17304, Mar. 23, 2012]

§ 151.1504 Definitions.

The following terms are defined as used in this subpart.

Alternate management system (AMS) means a ballast water management system approved by a foreign administration pursuant to the standards set forth in the International Maritime Organization's International BWM Convention, and meeting all applicable requirements of U.S. law, and which is used in lieu of ballast water exchange.

Ballast tank means any tank or hold on a vessel used for carrying ballast water, whether or not the tank or hold was designed for that purpose.

Ballast water means any water and suspended matter taken on board a vessel to control or maintain, trim, draught, stability, or stresses of the vessel, regardless of how it is carried.

Ballast water management system (BWMS) means any system which processes ballast water to kill, render harmless, or remove organisms. The BWMS includes all ballast water treatment equipment and all associated control and monitoring equipment.

Captain of the Port (COTP) means the Coast Guard officer designated as COTP of either the Buffalo, NY, Marine Inspection Zone and Captain of the

Port Zone or the New York, NY, Captain of the Port Zone described in part 3 of this chapter or an official designated by the COTP.

Commandant means the Commandant of the Coast Guard or an authorized representative.

Constructed in respect to a vessel means a stage of construction when—

(1) The keel of a vessel is laid;

(2) Construction identifiable with the specific vessel begins;

(3) Assembly of the vessel has commenced and comprises at least 50 tons or 1 percent of the estimated mass of all structural material, whichever is less; or

(4) The vessel undergoes a major conversion.

Exclusive Economic Zone (EEZ) means the area established by Presidential Proclamation Number 5030, dated March 10, 1983, (48 FR 10605, 3 CFR, 1983 Comp., p. 22), which extends from the base line of the territorial sea of the United States seaward 200 miles, and the equivalent zone of Canada.

Environmentally sound method means methods, efforts, actions, or programs, either to prevent introductions or to control infestations of aquatic nuisance species, that minimize adverse impacts to the structure and function of an ecosystem, minimize adverse effects on non-target organisms and ecosystems, and that emphasize integrated pest management techniques and non-chemical measures.

Great Lakes means Lake Ontario, Lake Erie, Lake Huron (including Lake Saint Clair), Lake Michigan, Lake Superior, and the connecting channels (Saint Mary's River, Saint Clair River, Detroit River, Niagara River, and Saint Lawrence River to the Canadian border), and includes all other bodies of water within the drainage basin of such lakes and connecting channels.

Port means a terminal or group of terminals or any place or facility that has been designated as a port by the COTP.

Sediments means any matter settled out of ballast water within a vessel.

Voyage means any transit by a vessel destined for the Great Lakes or the Hudson River, north of the George Washington Bridge, from a port or place outside of the EEZ, including intermediate stops at a port or place within the EEZ.

Waters of the United States means waters subject to the jurisdiction of the United States as defined in 33 CFR 2.38, including the navigable waters of the United States. For 33 CFR part 151, subparts C and D, the navigable waters include the territorial sea as extended to 12 nautical miles from the baseline, pursuant to Presidential Proclamation No. 5928 of December 27, 1988.

[CGD 91–066, 58 FR 18334, Apr. 8, 1993, as amended by CGD 94–003, 59 FR 67634, Dec. 30, 1994; USCG–1998–3423, 64 FR 26682, May 17, 1999; USCG–2001–10486, 77 FR 17304, Mar. 23, 2012]

§ 151.1505 Severability.

If a court finds any portion of this subpart to have been promulgated without proper authority, the remainder of this subpart will remain in full effect.

[USCG–2001–10486, 77 FR 17304, Mar. 23, 2012]

§ 151.1506 Restriction of operation.

No vessel subject to the requirements of this subpart may be operated in the Great Lakes or the Hudson River, north of the George Washington Bridge, unless the master of the vessel has certified, in accordance with § 151.1516, that the requirements of this subpart have been met.

[CGD 94–003, 59 FR 67634, Dec. 30, 1994]

§ 151.1508 Revocation of clearance.

A COTP may request the District Director of Customs to withhold or revoke the clearance required by 46 U.S.C. app. 91 for a vessel subject to this subpart, the owner or operator of which is not in compliance with the requirements of this subpart.

§ 151.1510 Ballast water management requirements.

(a) The master of each vessel subject to this subpart shall employ one of the following ballast water management practices:

(1) Carry out an exchange of ballast water on the waters beyond the Exclusive Economic Zone (EEZ), from an area more than 200 nautical miles from any shore, and in waters more than 2,000 meters (6,560 feet, 1,093 fathoms)

deep, such that, at the conclusion of the exchange, any tank from which ballast water will be discharged contains water with a minimum salinity level of 30 parts per thousand, unless the vessel is required to employ an approved ballast water management system (BWMS) per the schedule in § 151.1512(b) of this subpart. This exchange must occur prior to entry into the Snell Lock at Massena, NY, or navigating on the Hudson River, north of the George Washington Bridge. An alternative management system (AMS) that meets the requirements of 33 CFR 151.2026 may also be used, so long as it was installed on the vessel prior to the date that the vessel is required to comply with the ballast water discharge standard in accordance with § 151.1512(b) of this subpart. If using an AMS, the master, owner, operator, agent, or person in charge of the vessel subject to this subpart may employ the AMS for no longer than 5 years from the date they would otherwise be required to comply with the ballast water discharge standard in accordance with § 151.1512(b) of this subpart.

(2) Retain the vessel's ballast water on board the vessel. If this method of ballast water management is employed, the COTP may seal any tank or hold containing ballast water on board the vessel for the duration of the voyage within the waters of the Great Lakes or the Hudson River, north of the George Washington Bridge.

(3) Install and operate a BWMS that has been approved by the Coast Guard under 46 CFR part 162, in accordance with § 151.1512(b) of this subpart. Following installation of a BWMS, the master, owner, operator, agent, or person in charge of the vessel must maintain the BWMS in accordance with all manufacturer specifications.

(i) Requirements for approval of BWMS are found in 46 CFR part 162.060.

(ii) Requests for approval of BWMS must be submitted to the Commanding Officer (Marine Safety Center), U.S. Coast Guard Marine Safety Center, 2100 2nd St. SW., Stop 7102, Washington, DC 20593–7102, or by email to *msc@uscg.mil*.

(4) Use only water from a U.S. public water system (PWS), as defined in 40 CFR 141.2 and that meets the requirements of 40 CFR parts 141 and 143, as ballast water. Vessels using water from a PWS as ballast must maintain a record of which PWS they received the water and a receipt, invoice, or other documentation from the PWS indicating that water came from that system. Furthermore, they must certify that they have met the conditions in paragraphs (a)(4)(i) or (ii) of this section, as applicable. Vessels using water from a PWS must use such water exclusively for all ballast water unless the usage is in accordance with § 151.1515 of this subpart. Vessels using PWS water as ballast must have either—

(i) Previously cleaned the ballast tanks (including removing all residual sediments) and not subsequently introduced ambient water; or

(ii) Never introduced ambient water to those tanks and supply lines.

(b) No master of a vessel subject to this subpart shall separately discharge sediment from tanks or holds containing ballast water unless it is disposed of ashore in accordance with local requirements.

(c) Nothing in this subpart authorizes the discharge of oil or noxious liquid substances (NLSs) in a manner prohibited by United States or international laws or regulations. Ballast water carried in any tank containing a residue of oil, NLSs, or any other pollutant must be discharged in accordance with the applicable regulations. Nothing in this subpart affects or supersedes any requirement or prohibitions pertaining to the discharge of ballast water into the waters of the United States under the Federal Water Pollution Control Act (33 U.S.C. 1251 *et seq.*).

(d) Unless otherwise expressly provided for in this subpart, the master, owner, operator, agent, or person in charge of vessels employing a Coast Guard-approved BWMS must meet the applicable ballast water discharge standard, found in § 151.1511 of this subpart, at all times of ballast water discharge into the waters of the United States.

[CGD 91–066, 58 FR 18334, Apr. 8, 1993, as amended by CGD 94–003, 59 FR 67634, Dec. 30, 1994; USCG–1998–3423, 66 FR 58390, Nov. 21, 2001; USCG–2010–0351, 75 FR 36284, June 25, 2010; USCG–2001–10486, 77 FR 17304, Mar. 23, 2012; 77 FR 33970, June 8, 2012]

§ 151.1511 Ballast water discharge standard (BWDS).

(a) Vessels employing a Coast Guard-approved ballast water management system (BWMS) must meet the following BWDS by the date in § 151.1512(b) of this subpart:

(1) For organisms greater than or equal to 50 micrometers in minimum dimension: discharge must include fewer than 10 living organisms per cubic meter of ballast water.

(2) For organisms less than 50 micrometers and greater than or equal to 10 micrometers: discharge must include fewer than 10 living organisms per milliliter (mL) of ballast water.

(3) Indicator microorganisms must not exceed:

(i) For Toxicogenic *Vibrio cholerae* (serotypes O1 and O139): a concentration of less than 1 colony forming unit (cfu) per 100 mL.

(ii) For *Escherichia coli:* a concentration of fewer than 250 cfu per 100 mL.

(iii) For intestinal enterococci: a concentration of fewer than 100 cfu per 100 mL.

(b) [Reserved]

(c) The Coast Guard will conduct a practicability review as follows:

(1) No later than January 1, 2016, the Coast Guard will publish the results of a practicability review to determine—

(i) Whether technology to comply with a performance standard more stringent than that required by paragraph (a) of this section can be practicably implemented, in whole or in part, and, if so, the Coast Guard will schedule a rulemaking to implement the more stringent standard; *and*

(ii) Whether testing protocols that can accurately measure efficacy of treatment against a performance standard more stringent than that required by paragraph (a) of this section can be practicably implemented.

(2) If the Coast Guard determines on the basis of a practicability review conducted under paragraph (c)(1) of this section that technology to achieve a significant improvement in ballast water treatment efficacy could be practicably implemented, the Coast Guard will report this finding and will, no later than January 1, 2017, initiate a rulemaking that would establish performance standards and other requirements or conditions to ensure to the maximum extent practicable that aquatic nuisance species are not discharged into waters of the United States from vessels. If the Coast Guard subsequently finds that it is not able to meet this schedule, the Coast Guard will publish a notice in the FEDERAL REGISTER so informing the public, along with an explanation of the reason for the delay, and a revised schedule for rule making that shall be as expeditious as practicable.

(3) When conducting the practicability review as required by paragraph (c)(1) of this section, the Coast Guard will consider—

(i) The capability of any identified technology to achieve a more stringent ballast water discharge standard, in whole or in part;

(ii) The effectiveness of any identified technology in the shipboard environment;

(iii) The compatibility of any identified technology with vessel design and operation;

(iv) The safety of any identified technology;

(v) Whether the use of any identified technology may have an adverse impact on the environment;

(vi) The cost of any identified technology;

(vii) The economic impact of any identified technology, including the impact on shipping, small businesses, and other uses of the aquatic environment;

(viii) The availability, accuracy, precision, and cost of methods and technologies for measuring the concentrations of organisms, treatment chemicals, or other pertinent parameters in treated ballast water as would be required under any alternative discharge standards;

(ix) Any requirements for the management of ballast water included in the most current version of the U.S. Environmental Protection Agency's Vessel General Permit and any documentation available from the EPA regarding the basis for these requirements; and

(x) Any other factor that the Coast Guard considers appropriate that is related to the determination of whether identified technology is performable,

practicable, and/or may possibly prevent the introduction and spread of non-indigenous aquatic invasive species.

[USCG–2001–10486, 77 FR 17305, Mar. 23, 2012]

§ 151.1512 Implementation schedule for approved ballast water management methods.

(a) In order to discharge ballast water into the waters of the United States, the master, owner, operator, agent, or person in charge of a vessel subject to § 151.1510 of this subpart must either ensure that the ballast water meets the ballast water discharge standard as defined in § 151.1511(a), use an AMS as provided for under § 151.1510(a)(1) or ballast exclusively with water from a U.S. public water system, as described in § 151.1510(a)(4), according to the schedule in paragraph (b) of this section.

(b) *Implementation Schedule for the Ballast Water Management Discharge Standard for vessels using a Coast Guard approved BWMS to manage ballast water discharged to U.S. waters.* After the dates listed in Table 151.1512(b), vessels may use a USCG-approved BWMS and comply with the discharge standard, or employ an approved alternative ballast water management method per § 151.1510(a)(1) and (4).

TABLE 151.1512(b)—IMPLEMENTATION SCHEDULE FOR BALLAST WATER MANAGEMENT DISCHARGE STANDARDS FOR VESSELS USING COAST GUARD APPROVED BALLAST WATER MANAGEMENT SYSTEMS

	Vessel's ballast water capacity	Date constructed	Vessel's compliance date
New vessels	All	On or after December 1, 2013.	On delivery.
Existing vessels	Less than 1500 m^3	Before December 1, 2013.	First scheduled drydocking after January 1, 2016.
	1500–5000 m^3	Before December 1, 2013.	First scheduled drydocking after January 1, 2014.
	Greater than 5000 m^3	Before December 1, 2013.	First scheduled drydocking after January 1, 2016.

[USCG–2001–10486, 77 FR 17305, Mar. 23, 2012]

§ 151.1513 Extension of compliance date.

The Coast Guard may grant an extension to the implementation schedule in § 151.1512(b) of this subpart only in those cases where the master, owner, operator, agent, or person in charge of a vessel subject to this subpart can document that, despite all efforts, compliance with the requirement under § 151.1510 is not possible. Any extension request must be made no later than 12 months before the scheduled implementation date listed in § 151.1512(b) of this subpart and submitted in writing to the Commandant (CG–522), U.S. Coast Guard Office of Operating and Environmental Standards, 2100 2nd St. SW., Stop 7126, Washington, DC 20593–7126. Summary information concerning all extension decisions, including the name of the vessel and vessel owner, the term of the extension, and the basis for the extension will be promptly posted on the Internet. Extensions will be for no longer than the minimum time needed, as determined by the Coast Guard, for the vessel to comply with the requirements of § 151.1510.

[USCG–2001–10486, 77 FR 17306, Mar. 23, 2012]

§ 151.1514 Vessel safety.

Nothing in this subpart relieves the master of the responsibility for ensuring the safety and stability of the vessel or the safety of the crew and passengers, or any other responsibility.

[CGD 91–066, 58 FR 18334, Apr. 8, 1993. Redesignated by USCG–2001–10486, 77 FR 17305, Mar. 23, 2012]

§ 151.1515 Ballast water management alternatives under extraordinary conditions.

(a) As long as ballast water exchange (BWE) remains an option under the schedule in § 151.1512(b) of this subpart, the master of any vessel subject to this subpart who uses BWE to meet the requirements of this subpart and, due to weather, equipment failure, or other

extraordinary conditions, is unable to effect a BWE before entering the Exclusive Economic Zone, and intends to discharge ballast water into the waters of the United States, must request permission from the Captain of the Port (COTP) to exchange the vessel's ballast water within an area agreed to by the COTP at the time of the request and then discharge the vessel's ballast water within that designated area.

(b) Once BWE is no longer an option under the schedule in §151.1512(b) of this subpart, if the ballast water management system required by this subpart stops operating properly during a voyage or the vessel's BWM method is unexpectedly unavailable, the master, owner, operator, agent, or person in charge of the vessel must ensure that the problem is reported to the COTP as soon as practicable. The vessel may continue to the next port of call, subject to the directions of the COTP or the Ninth District Commander, as provided by 33 CFR part 160.

[USCG–2001–10486, 77 FR 17306, Mar. 23, 2012, as amended at 77 FR 33970, June 8, 2012]

§ 151.1516 Compliance monitoring.

(a) The master of each vessel equipped with ballast tanks must provide, as detailed in §151.2070 of this part, the following information, in written form, to the Captain of the Port (COTP):

(1) The vessel's name, port of registry, and official number or call sign.

(2) The name of the vessel's owner(s).

(3) Whether ballast water is being carried.

(4) The original location and salinity, if known, of ballast water taken on, before an exchange.

(5) The location, date, and time of any ballast water exchange.

(6) The salinity of any ballast water to be discharged into the territorial waters of the United States.

(7) The intended discharge port for ballast water and location for disposal of sediment carried upon entry into the territorial waters of the United States, if ballast water or sediment are to be discharged.

(8) The signature of the master attesting to the accuracy of the information provided and certifying compliance with the requirements of this subpart.

(b) The COTP may take samples of ballast water to assess the compliance with, and the effectiveness of, this subpart.

[CGD 91–066, 58 FR 18334, Apr. 8, 1993, as amended by USCG–1998–3423, 66 FR 58391, Nov. 21, 2001; USCG–2002–13147, 69 FR 32869, June 14, 2004; USCG–2001–10486, 77 FR 17306, Mar. 23, 2012]

§ 151.1518 Penalties for failure to conduct ballast water management.

(a) A person who violates this subpart is liable for a civil penalty in an amount not to exceed $27,500. Each day of a continuing violation constitutes a separate violation. A vessel operated in violation of the regulations is liable in rem for any civil penalty assessed under this subpart for that violation.

(b) A person who knowingly violates the regulations of this subpart is guilty of a class C felony.

[USCG–2002–13147, 69 FR 32869, June 14, 2004]

Subpart D—Ballast Water Management for Control of Nonindigenous Species in Waters of the United States

AUTHORITY: 16 U.S.C. 4711; Department of Homeland Security Delegation No. 0170.1.

SOURCE: USCG–2001–10486, 77 FR 17306, Mar. 23, 2012, unless otherwise noted.

§ 151.2000 Purpose and scope.

This subpart implements the provisions of the Nonindigenous Aquatic Nuisance Prevention and Control Act of 1990 (16 U.S.C. 4701–4751), as amended by the National Invasive Species Act of 1996.

§ 151.2005 Definitions.

(a) Unless otherwise stated in this section, the definitions in 33 CFR 151.1504, 33 CFR 160.204, and the United Nations Convention on the Law of the Sea apply to this subpart.

(b) As used in this subpart:

Captain of the Port (COTP) means the Coast Guard officer designated by the Commandant to command a COTP Zone as described in part 3 of this chapter.

Constructed in respect of a vessel means a stage of construction when—

(1) The keel of a vessel is laid;

(2) Construction identifiable with the specific vessel begins;

(3) Assembly of the vessel has commenced and comprises at least 50 tons or 1 percent of the estimated mass of all structural material, whichever is less; or

(4) The vessel undergoes a major conversion.

Exchange means to replace the water in a ballast tank using one of the following methods:

(1) *Flow-through exchange* means to flush out ballast water by pumping in mid-ocean water at the bottom of the tank and continuously overflowing the tank from the top until three full volumes of water has been changed to minimize the number of original organisms remaining in the tank.

(2) *Empty/refill exchange* means to pump out the ballast water taken on in ports, estuarine, or territorial waters until the pump(s) lose suction, then refilling the ballast tank(s) with mid-ocean water.

International Maritime Organization (IMO) ballast water management guidelines mean the Guidelines for the Control and Management of Ships' Ballast Water to Minimize the Transfer of Harmful Aquatic Organisms and Pathogens (IMO Resolution A.868 (20), adopted November 1997).

National Ballast Information Clearinghouse (NBIC) means the National Ballast Information Clearinghouse operated by the Coast Guard and the Smithsonian Environmental Research Center as mandated under the National Invasive Species Act of 1996.

Port or place of departure means any port or place in which a vessel is anchored or moored.

Port or place of destination means any port or place to which a vessel is bound to anchor or moor.

Seagoing vessel means a vessel in commercial service that operates beyond the boundary line established by 46 CFR part 7. It does not include a vessel that navigates exclusively on inland waters.

Shipboard Technology Evaluation Program (STEP) means a Coast Guard research program intended to facilitate research, development, and shipboard testing of effective BWMS. STEP requirements are located at: *http://www.uscg.mil/environmental_standards/*.

United States means the States, the District of Columbia, Guam, American Samoa, the Virgin Islands, the Commonwealth of Puerto Rico, the Commonwealth of the Northern Mariana Islands, and any other territory or possession over which the United States exercises sovereignty.

Voyage means any transit by a vessel destined for any United States port or place.

[USCH–2001–10486, 77 FR 17306, Mar. 23, 2012, as amended at 77 FR 33970, June 8, 2012]

§ 151.2010 Applicability.

This subpart applies to all non-recreational vessels, U.S. and foreign, that are equipped with ballast tanks and operate in the waters of the United States, except as expressly provided in § 151.2015 or § 151.2020 of this subpart.

§ 151.2013 Severability.

If a court finds any portion of this subpart to have been promulgated without proper authority, the remainder of this subpart will remain in full effect.

§ 151.2015 Exemptions.

(a) The following vessels are exempt from all of the requirements of this subpart:

(1) Any Department of Defense or Coast Guard vessel subject to the requirements of section 1103 of the Nonindigenous Aquatic Nuisance Prevention and Control Act, as amended by the National Invasive Species Act; or any vessel of the Armed Forces, as defined in the Federal Water Pollution Control Act (33 U.S.C. 1322(a)), that is subject to the ''Uniform National Discharge Standards for Vessels of the Armed Forces'' (33 U.S.C. 1322(n)).

(2) Any warship, naval auxiliary, or other vessel owned or operated by a foreign state and used, for the time being, only on government non-commercial service. However, such vessels should act in a manner consistent, so far as is reasonable and practicable, with this subpart.

(b) The following vessels are exempt from the requirements of §§ 151.2025

(ballast water management (BWM) requirements), 151.2060 (reporting), and 151.2070 (recordkeeping) of this subpart:

(1) Crude oil tankers engaged in coastwise trade.

(2) Vessels that operate exclusively within one Captain of the Port (COTP) Zone.

(c) The following vessels are exempt only from the requirements of § 151.2025 (BWM requirements) of this subpart:

(1) Seagoing vessels that operate in more than one COTP Zone, do not operate outside of the Exclusive Economic Zone (EEZ), and are less than or equal to 1,600 gross register tons or less than or equal to 3,000 gross tons (International Convention on Tonnage Measurement of Ships, 1969).

(2) Non-seagoing vessels.

(3) Vessels that take on and discharge ballast water exclusively in one COTP Zone.

§ 151.2020 Vessels in innocent passage.

A foreign vessel that is merely traversing the territorial sea of the United States (unless bound for, entering or departing a U.S. port or navigating the internal waters of the U.S.) does not fall within the applicability of this subpart.

§ 151.2025 Ballast water management requirements.

(a) The master, owner, operator, agent, or person in charge of a vessel equipped with ballast tanks that operates in the waters of the United States must employ one of the following ballast water management methods:

(1) Install and operate a ballast water management system (BWMS) that has been approved by the Coast Guard under 46 CFR part 162. The BWMS must be installed in accordance with § 151.2035(b) of this subpart. Following installation, the master, owner, operator, agent, or person in charge of the vessel subject to this subpart must properly maintain the BWMS in accordance with all manufacturer specifications. Unless otherwise expressly provided for in this subpart, the master, owner, operator, agent, or person in charge of vessels employing a Coast Guard-approved BWMS must meet the applicable ballast water discharge standard (BWDS), found in § 151.2030 of this subpart, at all times of discharge into the waters of the United States.

(2) Use only water from a U.S. public water system (PWS), as defined in 40 CFR 141.2, that meets the requirements of 40 CFR parts 141 and 143 as ballast water. Vessels using water from a PWS as ballast must maintain a record of which PWS they received the water from as well as a receipt, invoice, or other documentation from the PWS indicating that water came from that system. Furthermore, they must certify that they have met the conditions in paragraphs (a)(2)(i) or (ii) of this section, as applicable, and describe in the BWM plan the procedures to be used to ensure compliance with those conditions, and thereafter document such compliance in the BW record book. Vessels using water from a PWS must use such water exclusively unless the usage is in accordance with § 151.2040 of this subpart. Vessels using PWS water as ballast must have either—

(i) Previously cleaned the ballast tanks (including removing all residual sediments) and not subsequently introduced ambient water; or

(ii) Never introduced ambient water to those tanks and supply lines.

(3) Perform complete ballast water exchange in an area 200 nautical miles from any shore prior to discharging ballast water, unless the vessel is required to employ an approved BWMS per the schedule found in § 151.2035(b) of this subpart. An alternate management system (AMS) that meets the requirements of § 151.2026 of this subpart may also be used, so long as it was installed on the vessel prior to the date that the vessel is required to comply with the BWDS in accordance with § 151.2035(b) of this subpart. If using an AMS, the master, owner, operator, agent, or person in charge of the vessel subject to this subpart may employ the AMS for no longer than 5 years from the date they would otherwise be required to comply with the BWDS in accordance with § 151.2035(b) of this subpart;

(4) Do not discharge ballast water into waters of the United States.

(5) Discharge to a facility onshore or to another vessel for purposes of treatment. Any vessel owner/operator discharging ballast water to a facility onshore or to another vessel must ensure

that all vessel piping and supporting infrastructure up to the last manifold or valve immediately before the dock manifold connection of the receiving facility or similar appurtenance on a reception vessel prevents untreated ballast water from being discharged into waters of the United States.

(b) Requests for approval of BWMS must be submitted to the Commanding Officer (Marine Safety Center), U.S. Coast Guard Marine Safety Center, 2100 2nd St. SW., Stop 7102, Washington, DC 20593–7102, or by email to *msc@uscg.mil*, in accordance with 46 CFR part 162.

(c) A vessel engaged in the foreign export of Alaskan North Slope Crude Oil must comply with §§ 151.2060 and 151.2070 of this subpart, as well as with the provisions of 15 CFR 754.2(j)(1)(iii). Section 15 CFR 754.2(j)(1)(iii) requires a mandatory program of deep water ballast exchange unless doing so would endanger the safety of the vessel or crew.

(d) This subpart does not authorize the discharge of oil or noxious liquid substances (NLS) in a manner prohibited by United States or international laws or regulations. Ballast water carried in any tank containing a residue of oil, NLS, or any other pollutant must be discharged in accordance with applicable laws and regulations.

(e) This subpart does not affect or supersede any requirement or prohibition pertaining to the discharge of ballast water into the waters of the United States under the Federal Water Pollution Control Act (33 U.S.C. 1251 to 1376).

(f) This subpart does not affect or supersede any requirement or prohibition pertaining to the discharge of ballast water into the waters of the United States under the National Marine Sanctuaries Act (16 U.S.C. 1431 *et seq.*).

(g) Vessels with installed BWMS for testing and evaluation by an Independent Laboratory in accordance with the requirements of 46 CFR 162.060–10 and 46 CFR 162.060–28 will be deemed to be in compliance with paragraph (a)(1) of this section.

§ 151.2026 Alternate management systems.

(a) A manufacturer whose ballast water management system (BWMS) has been approved by a foreign administration pursuant to the standards set forth in the International Convention for the Control and Management of Ships' Ballast Water and Sediments, 2004, may request in writing, for the Coast Guard to make a determination that their BWMS is an alternate management system (AMS). Requests for determinations under this section must include:

(1) The type-approval certificate for the BWMS.

(2) Name, point of contact, address, and phone number of the authority overseeing the program;

(3) Final test results and findings, including the full analytical procedures and methods, results, interpretations of the results, and full description and documentation of the Quality Assurance procedures (*i.e.*, sample chain of custody forms, calibration records, etc.);

(4) A description of any modifications made to the system after completion of the testing for which a determination is requested; and

(5) A type approval application as described under 46 CFR 162.060–12.

(i) Once ballast water management systems are type approved by the Coast Guard and available for a given class, type of vessels, or specific vessel, those vessels will no longer be able to install AMS in lieu of type approved systems.

(ii) [Reserved]

(b) Requests for determinations must be submitted in writing to the Commanding Officer, U.S. Coast Guard Marine Safety Center, 2100 2nd St. SW., Stop 7102, Washington, DC 20593–7102.

(c) If using an AMS that was installed on the vessel prior to the date that the vessel is required to comply with the ballast water discharge standard in accordance with § 151.2035(b), the master, owner, operator, agent, or person in charge of the vessel subject to this subpart may employ such AMS for no longer than 5 years from the date they would otherwise be required to comply with the ballast water discharge standard in accordance with the implementation schedule in § 151.2035 (b) of this subpart. To ensure the safe and effective management and operation of the AMS equipment, the master, owner, operator, agent or person in charge of the vessel must ensure the AMS is maintained and operated in

conformity with the system specifications.

(d) An AMS determination issued under this section may be suspended, withdrawn, or terminated in accordance with the procedures contained in 46 CFR 162.060–18.

§ 151.2030 Ballast water discharge standard (BWDS).

(a) Vessels employing a Coast Guard-approved ballast water management system (BWMS) must meet the following BWDS by the date listed in § 151.2035(b) of this subpart:

(1) For organisms greater than or equal to 50 micrometers in minimum dimension: Discharge must include fewer than 10 organisms per cubic meter of ballast water.

(2) For organisms less than 50 micrometers and greater than or equal to 10 micrometers: Discharge must include fewer than 10 organisms per milliliter (mL) of ballast water.

(3) Indicator microorganisms must not exceed:

(i) For toxicogenic *Vibrio cholerae* (serotypes O1 and O139): A concentration of less than 1 colony forming unit (cfu) per 100 mL.

(ii) For *Escherichia coli:* a concentration of fewer than 250 cfu per 100 mL.

(iii) For intestinal enterococci: A concentration of fewer than 100 cfu per 100 mL.

(b) [Reserved]

(c) The Coast Guard will conduct a practicability review as follows:

(1) No later than January 1, 2016, the Coast Guard will publish the results of a practicability review to determine—

(i) Whether technology to comply with a performance standard more stringent than that required by paragraph (a) of this section can be practicably implemented, in whole or in part, and, if so, the Coast Guard will schedule a rulemaking to implement the more stringent standard; and

(ii) Whether testing protocols that can assure accurate measurement of compliance with a performance standard more stringent than that required by paragraph (a) of this section can be practicably implemented.

(2) If the Coast Guard determines on the basis of a practicability review conducted under paragraph (c)(1) of this section that technology to achieve a significant improvement in ballast water treatment efficacy could be practicably implemented, the Coast Guard will report this finding and will, no later than January 1, 2017, initiate a rulemaking that would establish performance standards and other requirements or conditions to ensure to the maximum extent practicable that aquatic nuisance species are not discharged into waters of the United States from vessels. If the Coast Guard subsequently finds that it is not able to meet this schedule, the Coast Guard will publish a notice in the FEDERAL REGISTER so informing the public, along with an explanation of the reason for the delay, and a revised schedule for rule making that shall be as expeditious as practicable.

(3) When conducting the practicability review as described in paragraph (c)(1) of this section, the Coast Guard will consider—

(i) The capability of any identified technology to achieve a more stringent BWDS, in whole or in part;

(ii) The effectiveness of any identified technology in the shipboard environment;

(iii) The compatibility of any identified technology with vessel design and operation;

(iv) The safety of any identified technology;

(v) Whether the use of any identified technology may have an adverse impact on the environment;

(vi) The cost of any identified technology;

(vii) The economic impact of any identified technology, including the impact on shipping, small businesses, and other uses of the aquatic environment;

(viii) The availability, accuracy, precision, and cost of methods and technologies for measuring the concentrations of organisms, treatment chemicals, or other pertinent parameters in treated ballast water as would be required under any alternative discharge standards;

(ix) Any requirements for the management of ballast water included in the most current version of the Environmental Protection Agency's Vessel

General Permit and any documentation available from the EPA regarding the basis for these requirements; and

(x) Any other factor that the Coast Guard considers appropriate that is related to the determination of whether identified technology is performable, practicable, and/or may possibly prevent the introduction and spread of non-indigenous aquatic invasive species.

§ 151.2035 Implementation schedule for approved ballast water management methods.

(a) To discharge ballast water into waters of the United States, the master, owner, operator, agent, or person in charge of a vessel subject to § 151.2025 of this subpart must either ensure that the ballast water meets the ballast water discharge standard as defined in § 151.2030(a), use an AMS as described in § 151.2025(a)(3) or ballast with water from a U.S. public water system, as described in § 151.2025(a)(2), according to the schedule in paragraph (b) of this section.

(b) *Implementation Schedule for the Ballast Water Management Discharge Standard for vessels using a Coast Guard approved BWMS to manage ballast water discharged to waters of the U.S.* After the dates listed in Table 151.2035(b), vessels may use a USCG-approved BWMS and comply with the discharge standard, use PWS per § 151.2025(a)(2), or use a previously installed AMS per § 151.2025(a)(3).

TABLE 151.2035(b)—IMPLEMENTATION SCHEDULE FOR APPROVED BALLAST WATER MANAGEMENT METHODS

	Vessel's ballast water capacity	Date constructed	Vessel's compliance date
New vessels	All	On or after December 1, 2013	On delivery.
Existing vessels	Less than 1500 m^3	Before December 1, 2013	First scheduled drydocking after January 1, 2016.
	1500–5000 m^3	Before December 1, 2013	First scheduled drydocking after January 1, 2014.
	Greater than 5000 m^3	Before December 1, 2013	First scheduled drydocking after January 1, 2016.

§ 151.2036 Extension of compliance date.

The Coast Guard may grant an extension to the implementation schedule listed in § 151.2035(b) of this subpart only in those cases where the master, owner, operator, agent, or person in charge of a vessel subject to this subpart can document that despite all efforts to meet the ballast water discharge standard requirements in § 151.2030 of this subpart, compliance is not possible. Any extension request must be made no later than 12 months before the scheduled implementation date listed in § 151.2035(b) of this subpart and submitted in writing to the Commandant (CG–522), U.S. Coast Guard Office of Operating and Environmental Standards, 2100 2nd St. SW., Stop 7126, Washington, DC 20593–7126. Summary information concerning all extension decisions, including the name of the vessel and vessel owner, the term of the extension, and the basis for the extension will be promptly posted on the Internet. Extensions will be for no longer than the minimum time needed, as determined by the Coast Guard, for the vessel to comply with the requirements of § 151.2030.

§ 151.2040 Discharge of ballast water in extraordinary circumstances.

(a) The Coast Guard will allow the master, owner, operator, agent, or person in charge of a vessel that cannot practicably meet the requirements of § 151.2025(a) of this subpart, either because its voyage does not take it into waters 200 nautical miles or greater from any shore for a sufficient length of time and the vessel retains ballast water onboard or because the master of the vessel has identified safety or stability concerns, to discharge ballast water in areas other than the Great Lakes and the Hudson River north of the George Washington Bridge.

(1) The Coast Guard will not allow such a discharge if the vessel is required to have a Coast Guard-approved ballast water management system (BWMS) per the implementation schedule found in § 151.2035(b) of this subpart.

(2) If the Coast Guard allows the discharge of ballast water as described in paragraph (a) of this section, the master, owner, operator, agent, or person in charge of the vessel must discharge only that amount of ballast water operationally necessary to ensure the safety of the vessel for cargo operations.

(3) Ballast water records must be made available to the local Captain of the Port (COTP) upon request.

(4) Vessels on a voyage to the Great Lakes or the Hudson River north of the George Washington Bridge must comply with the requirements of 33 CFR 151.1515.

(b) If the installed BWMS required by this subpart stops operating properly during a voyage, or the vessel's BWM method is unexpectedly unavailable, the person directing the movement of the vessel must ensure that the problem is reported to the nearest COTP or District Commander as soon as practicable. The vessel may continue to the next port of call, subject to the directions of the COTP or District Commander, as provided by part 160 of this chapter.

(1) The Coast Guard will normally allow a vessel that cannot practicably meet the requirements of § 151.2025(a)(1) of this subpart because its installed BWMS is inoperable, or the vessel's BWM method is unexpectedly unavailable, to employ one of the other ballast water management (BWM) methods listed in § 151.2025(a) of this subpart.

(2) If the master of the vessel determines that the vessel cannot employ other BWM methods due to the voyage or safety concerns listed in paragraph (a) of this section, the Coast Guard will normally allow the vessel to discharge ballast water in areas other than the Great Lakes and the Hudson River north of the George Washington Bridge.

(3) If the Coast Guard approves such an allowance, the vessel must discharge only that amount of ballast water operationally necessary to ensure the safety and stability of the vessel for cargo operations. Ballast water records must be made available to the local COTP upon request.

(c) Nothing in this subpart relieves the master, owner, operator, agent, or person in charge of a vessel of any responsibility, including ensuring the safety and stability of the vessel and the safety of the crew and passengers.

§ 151.2050 Additional requirements—nonindigenous species reduction practices.

The master, owner, operator, agent, or person in charge of any vessel equipped with ballast water tanks that operates in the waters of the United States must follow these practices:

(a) Avoid the discharge or uptake of ballast water in areas within, or that may directly affect, marine sanctuaries, marine preserves, marine parks, or coral reefs.

(b) Minimize or avoid uptake of ballast water in the following areas and situations:

(1) Areas known to have infestations or populations of harmful organisms and pathogens (e.g., toxic algal blooms).

(2) Areas near sewage outfalls.

(3) Areas near dredging operations.

(4) Areas where tidal flushing is known to be poor or times when a tidal stream is known to be turbid.

(5) In darkness, when bottom-dwelling organisms may rise up in the water column.

(6) Where propellers may stir up the sediment.

(7) Areas with pods of whales, convergence zones, and boundaries of major currents.

(c) Clean the ballast tanks regularly to remove sediments. Sediments must be disposed of in accordance with local, State, and Federal regulations.

(d) Discharge only the minimal amount of ballast water essential for vessel operations while in the waters of the United States.

(e) Rinse anchors and anchor chains when the anchor is retrieved to remove organisms and sediments at their places of origin.

(f) Remove fouling organisms from the vessel's hull, piping, and tanks on a

regular basis and dispose of any removed substances in accordance with local, State and Federal regulations.

(g) Maintain a ballast water management (BWM) plan that has been developed specifically for the vessel and that will allow those responsible for the plan's implementation to understand and follow the vessel's BWM strategy and comply with the requirements of this subpart. The plan must include—

(1) Detailed safety procedures;

(2) Actions for implementing the mandatory BWM requirements and practices;

(3) Detailed fouling maintenance and sediment removal procedures;

(4) Procedures for coordinating the shipboard BWM strategy with Coast Guard authorities;

(5) Identification of the designated officer(s) in charge of ensuring that the plan is properly implemented;

(6) Detailed reporting requirements and procedures for ports and places in the United States where the vessel may visit; and

(7) A translation of the plan into English, French, or Spanish if the vessel's working language is another language.

(h) Train the master, operator, person in charge, and crew on the application of ballast water and sediment management and treatment procedures.

(i) When discharging ballast water to a reception facility in the United States, discharge only to reception facilities that have an NPDES permit to discharge ballast water.

§ 151.2055 Deviation from planned voyage.

As long as ballast water exchange (BWE) is an allowable ballast water management option under §§ 151.2025 and 151.2035 of this subpart, the Coast Guard will not require a vessel to deviate from its voyage or delay the voyage in order to conduct BWE. A vessel may be required to deviate from its voyage or delay the voyage if BWE is directed by a Captain of the Port pursuant to § 151.2040(b) of this subpart.

§ 151.2060 Reporting requirements.

(a) Ballast water reporting requirements exist for each vessel subject to this subpart bound for ports or places of the United States regardless of whether a vessel operated outside of the Exclusive Economic Zone (EEZ), unless exempted in § 151.2015 of this subpart.

(b) The master, owner, operator, agent, or person in charge of a vessel subject to this subpart and this section must provide the information required by § 151.2070 of this subpart in electronic or written form to the Commandant, U.S. Coast Guard or the appropriate Captain of the Port (COTP). The Ballast Water Reporting Form (Office of Management and Budget form Control No. 1625–0069) and the instructions for completing it are available on the National Ballast Information Clearinghouse's Web site at *http://invasions.si.edu/nbic/submit.html*. Information must be submitted as follows:

(1) *For any vessel bound for the Great Lakes from outside the EEZ:*

(i) Fax the required information at least 24 hours before the vessel arrives in Montreal, Quebec to the U.S. Coast Guard (USCG) COTP, Buffalo, Massena Detachment (315–769–5032).

(ii) Non-U.S. and non-Canadian flag vessels may complete the ballast water information section of the form required by the St. Lawrence Seaway, ''Pre-entry Information from Foreign Flagged Vessels Form,'' and submit it in accordance with the applicable Seaway notice as an alternative to this requirement.

(2) *For any vessel bound for the Hudson River north of the George Washington Bridge entering from outside the EEZ:* Fax the required information to the USCG COTP, New York (718–354–4249) at least 24 hours before the vessel enters New York, NY.

(3) *For any vessel that is equipped with ballast water tanks and bound for ports or places in the United States and not addressed in paragraphs (b)(1) and (b)(2) of this section:* If a vessel's voyage is less than 24 hours, report the required information before departing the port or place of departure. If a voyage exceeds 24 hours, report the required information at least 24 hours before arrival at

the port or place of destination. The information must be sent to the National Ballast Information Clearinghouse using only one of the following means:

(i) Via the Internet at *http://invasions.si.edu/nbic/submit.html*.

(ii) Email to *NBIC@BallastReport.org*.

(iii) Fax to 301–261–4319.

(iv) Mail to U.S. Coast Guard, c/o Smithsonian Environmental Research Center, P.O. Box 28, Edgewater, MD 21037–0028.

(c) If the information submitted in accordance with this section changes, the master, owner, operator, agent, or person in charge of the vessel must submit an amended report before the vessel departs the waters of the United States.

§ 151.2065 Equivalent reporting methods for vessels other than those entering the Great Lakes or Hudson River after operating outside the U.S. Exclusive Economic Zone or Canadian equivalent.

For vessels required to report under § 151.2060(b)(3) of this subpart, the Chief, Environmental Standards Division (CG–5224), acting for the Assistant Commandant for Marine Safety, Security, and Stewardship (CG–5), may, upon receipt of a written request, consider and approve alternative methods of reporting if—

(a) Such methods are at least as effective as those required by § 151.2060 of this subpart; and

(b) Compliance with § 151.2060 of this subpart is economically or physically impractical. The Chief, Environmental Standards Division (CG–5224), will approve or disapprove a request submitted in accordance with this section within 30 days of receipt of the request.

§ 151.2070 Recordkeeping requirements.

(a) The master, owner, operator, agent, or person in charge of a vessel bound for a port or place in the United States, unless specifically exempted by § 151.2015 of this subpart, must ensure the maintenance of written records that include the following information:

(1) *Vessel information*. This includes the name, International Maritime Organization (IMO) number (official number if IMO number is not issued), vessel type, owner or operator, gross tonnage, call sign, and State of registry (flag).

(2) *Voyage information*. This includes the date and port of arrival, vessel agent, last port and country of call, and next port and country of call.

(3) *Total ballast water information*. This includes the total ballast water capacity, total volume of ballast water onboard, total number of ballast water tanks, and total number of ballast water tanks in ballast. Use units of measurements such as metric tons (MT), cubic meters (m^3), long tons (LT), and short tons (ST).

(4) *Ballast water management (BWM)*. This includes the total number of ballast tanks/holds that are to be discharged into the waters of the United States or to a reception facility.

(i) If the vessel uses an alternative BWM method, note the number of tanks that are managed using an alternative method, as well as the type of method used.

(ii) Indicate whether the vessel has a BWM plan and IMO ballast water management guidelines onboard, and whether the BWM plan is used.

(5) *Information on ballast water tanks that are to be discharged into the waters of the United States or to a reception facility*. Include the following:

(i) The origin of ballast water. This includes date(s), location(s), volume(s) and temperature(s). If a tank has undergone ballast water exchange (BWE), list the loading port of the ballast water that was discharged during the exchange.

(ii) The date(s), location(s), volume(s), method, thoroughness (percentage exchanged, if BWE conducted), and sea height at time of exchange of any ballast water exchanged or otherwise managed.

(iii) The expected date, location, volume, and salinity of any ballast water to be discharged into the waters of the United States or to a reception facility.

(6) *Discharge of sediment*. Include the name and location of the facility where sediment disposal will take place, if sediment is to be discharged within the jurisdiction of the United States.

(7) *Certification of accurate information*. Include the master, owner, operator, agent, person in charge, or responsible officer's printed name, title, and signature attesting to the accuracy of the information provided and certifying compliance with the requirements of this subpart.

(b) The master, owner, operator, agent, or person in charge of a vessel subject to this section must retain a signed copy of this information onboard the vessel for 2 years.

(c) Two alternative ways to meet the requirements of this section are—

(1) Completing and retaining the Ballast Water Reporting Form contained in the IMO ballast water management guidelines; or

(2) Completing the ballast water information section of the form required by the St. Lawrence Seaway Pre-entry Information from Foreign Flagged Vessels.

(d) The master, owner, operator, agent, or person in charge of a vessel subject to this section must retain the monitoring records required in 46 CFR 162.060–20(b) for 2 years. These records may be stored on digital media but must be viewable for Coast Guard inspection.

(e) The information required by this subpart may be used to satisfy the ballast water recordkeeping requirements for vessels subject to § 151.2025(c) of this subpart and 33 CFR part 151 subpart C.

§ 151.2075 Enforcement and compliance.

(a) The master, owner, operator, agent, or person in charge of a vessel must provide the Captain of the Port (COTP) with access to the vessel in order to take samples of ballast water and sediment, examine documents, and make other appropriate inquiries to assess the compliance of any vessel subject to this subpart.

(b) The master, owner, operator, agent, or person in charge of a vessel subject to this section must provide the records to the COTP upon request, as required by § 151.2070 of this subpart.

(c) Vessels with installed ballast water management systems are subject to Coast Guard inspection. Every vessel must have a sampling port(s) designed and installed in accordance with 46 CFR 162.060–28(f) and (f)(2) at each overboard discharge point.

(d) In this subpart, wherever multiple entities are responsible for compliance with any requirement of the rule, each entity is jointly liable for a violation of such requirement.

§ 151.2080 Penalties.

(a) A person who violates this subpart is liable for a civil penalty not to exceed $35,000. Each day of a continuing violation constitutes a separate violation. A vessel operated in violation of the regulations is liable in rem for any civil penalty assessed under this subpart for that violation.

(b) A person who knowingly violates the regulations of this subpart is guilty of a class C felony.

Subpart E—Definition of Marine Debris for the Purposes of the Marine Debris Research, Prevention, and Reduction Act

AUTHORITY: 33 U.S.C. 1951–1958 (2006); 33 CFR 1.05–1; Department of Homeland Security Delegation No. 0170.1.

§ 151.3000 Definition of marine debris for the purposes of the Marine Debris Research, Prevention, and Reduction Act.

(a) *Marine debris*. For the purposes of the Marine Debris Research, Prevention, and Reduction Act (33 U.S.C. 1951–1958 (2006)) only, marine debris is defined as any persistent solid material that is manufactured or processed and directly or indirectly, intentionally or unintentionally, disposed of or abandoned into the marine environment or the Great Lakes.

(b) NOAA and the Coast Guard have jointly promulgated the definition of marine debris in this part. NOAA's regulation may be found in 15 CFR part 909.

[74 FR 45560, Sept. 3, 2009]

PART 153—CONTROL OF POLLUTION BY OIL AND HAZARDOUS SUBSTANCES, DISCHARGE REMOVAL

Subpart A—General

Sec.
153.101 Purpose.
153.103 Definitions.
153.105 FWPCA delegations and redelegation.
153.107 [Reserved]
153.109 CERCLA delegations.

Subpart B—Notice of the Discharge of Oil or a Hazardous Substance

153.201 Purpose.
153.203 Procedure for the notice of discharge.
153.205 Fines.

Subpart C—Removal of Discharged Oil

153.301 Purpose.
153.303 Applicability.
153.305 Methods and procedures for the removal of discharged oil.
153.307 Penalties.

Subpart D—Administration of the Pollution Fund

153.401 Purpose.
153.403 Applicability.
153.405 Liability to the pollution fund.
153.407 Payments or reimbursement from the pollution fund.
153.411 Procedures for payment of judgments.
153.413 Deposit of money into the fund.
153.415 Cost summary reports.
153.417 Reimbursement for actions under section 311(c) or 311(d) of the Act of the Intervention on the High Seas Act.

AUTHORITY: 14 U.S.C. 633; 33 U.S.C. 1321, 1903, 1908; 42 U.S.C. 9615; 46 U.S.C. 6101; E.O. 12580, 3 CFR, 1987 Comp., p. 193; E.O. 12777, 3 CFR, 1991 Comp., p. 351; Department of Homeland Security Delegation No. 0170.1.

SOURCE: CGD 73–185, 41 FR 12630, Mar. 25, 1976, unless otherwise noted.

Subpart A—General

§ 153.101 Purpose.

The purpose of this part is to prescribe regulations concerning notification to the Coast Guard of the discharge of oil or hazardous substances as required by the Federal Water Pollution Control Act, as amended (FWPCA); the procedures for the removal of a discharge of oil; and the costs that may be imposed or reimbursed for the removal of a discharge of oil or hazardous substances under the FWPCA.

[CGD 84–067, 51 FR 17965, May 16, 1986]

§ 153.103 Definitions.

As used in this part:

(a) *Act* means the Federal Water Pollution Control Act, as amended (33 U.S.C. 1251 *et seq.*).

(b) *CERCLA* means the Comprehensive Environmental Response, Compensation, and Liability Act of 1980 (42 U.S.C. 9601 *et seq.*).

(c) *Chemical agents* means those elements, compounds, or mixtures that coagulate, disperse, dissolve, emulsify, foam, neutralize, precipitate, reduce, solubilize, oxidize, concentrate, congeal, entrap, fix, make the pollutant mass more rigid or viscous, or otherwise facilitate the mitigation of deleterious effects or removal of the pollutant from the water. The term ''chemical agents'' as used in this part includes dispersants, surface collecting agents, biological additives, burning agents, and sinking agents as defined in Subpart H of the National Contingency Plan.

(d) *Assistant Commandant for Marine Safety, Security and Environmental Protection* means the Coast Guard Officer designated by the Commandant to assist and advise the Commandant on matters related to marine environmental response, port and environmental safety, and waterways management.

(e) *Coastal waters* means all U.S. waters subject to the tide, U.S. waters of the Great Lakes, specified ports and harbors on the inland rivers, waters of the contiguous zone, or other waters of the high seas subject to discharges in connection with activities under the Outer Continental Shelf Lands Act (43 U.S.C. 1331 *et seq.*) or the Deepwater Port Act of 1974 (33 U.S.C. 1501 *et seq.*), or which may affect natural resources belonging to, appertaining to, or under the exclusive management authority of the United States (including resources under the Magnuson Fishery Conservation and Management Act (16 U.S.C. 1801 *et seq.*)). These waters include those contained within the Exclusive

Economic Zone declared by Presidential Proclamation 5030 on March 10, 1983 (43 FR 10605).

NOTE: Coastal waters are those waters where the Coast Guard has the responsibility for providing On-Scene Coordinators under the National Contingency Plan. Specific dividing lines between coastal and inland waters, and the identification of specified ports and harbors on inland rivers, are contained in Regional Contingency Plans prepared pursuant to the National Contingency Plan.

(f) *Contiguous zone* means the entire zone established by the United States under Article 24 of the Convention on the Territorial Sea and the Contiguous Zone, as published in the June 1, 1972 issue of the FEDERAL REGISTER (37 FR 11906).

(g) *Discharge* includes, but is not limited to, any spilling, leaking, pumping, pouring, emitting, emptying, or dumping, but excludes (A) discharges in compliance with a permit under Section 402 of the Act, (B) discharges resulting from circumstances identified and reviewed and made part of the public record with respect to a permit issued or modified under Section 402 of the Act, and subject to a condition in such permit, and (C) continuous or anticipated intermittent discharges from a point source, identified in a permit or permit application under section 402 of the Act, which are caused by events occurring within the scope of relevant operating or treatment systems.

(h) *Hazardous substance* means any substance designated by the Administrator of the Environmental Protection Agency pursuant to section 311(b)(2) of the Act.

(i) *Inland waters* means all other waters of the U.S. not included in the definition of coastal waters.

NOTE: Inland waters are those waters where the Environmental Protection Agency has the responsibility for providing On-Scene Coordinators under the National Contingency Plan. Specific dividing lines between coastal and inland waters are contained in Regional Contingency Plans prepared pursuant to the National Contingency Plan.

(j) *Mechanical removal* means the use of pumps, skimmers, booms, earthmoving equipment, and other mechanical devices to contain the discharge of oil and to recover the discharge from the water or adjoining shorelines.

(k) *Navigable waters* means the waters of the United States as defined in paragraph 2.36(b) of this Chapter.

(l) *Offshore facility* means any facility of any kind located in, on, or under, any of the navigable waters of the United States, and any facility of any kind which is subject to the jurisdiction of the United States and is located in, on, or under any other waters, other than a vessel or a public vessel.

(m) *Oil* means oil of any kind or in any form, including but not limited to petroleum, fuel oil, sludge, oil refuse, and oil mixed with wastes other than dredged spoil.

(n) *On-Scene Coordinator* or *OSC* is the Federal official predesignated by the Environmental Protection Agency (EPA) or Coast Guard to coordinate and direct Federal removal efforts at the scene of an oil or hazardous substance discharge as prescribed in the National Oil and Hazardous Substances Pollution Contingency Plan (National Contingency Plan) as published in 40 CFR Part 300.

(o) *Onshore facility* means any facility (including, but not limited to, motor vehicles and rolling stock) of any kind located in, on, or under, any land within the United States other than submerged land.

(p) *Person* includes an individual, firm, corporation, association, and a partnership.

(q) *Pollution Fund* and *Fund* means the revolving fund established in the Treasury under the authority in section 311(k) of the Act to carry out the provisions of section 311 (c), (d), (i), and (l) of the Act.

(r) *Public vessel* means a vessel owned or bare-boat chartered and operated by the United States, or by a State or political subdivision thereof, or by a foreign nation, except when such vessel is engaged in commerce.

(s) *Remove* or *Removal* refers to removal of oil or hazardous substances from the waters and shorelines or the taking of such other actions as may be necessary to minimize or mitigate damage to the public health or welfare, including, but not limited to, fish, shellfish, wildlife, and public and private property, shorelines, and beaches.

(t) *Sorbent* means materials essentially inert and insoluble used to remove oil from water through a variety of sorption mechanisms. Examples include straw, expanded perlite, polyurethane foam, reclaimed paper fibers, and peat moss.

(u) *Such quantities as may be harmful* means those quantities of oil and any hazardous substances determined in accordance with the provisions of section 311(b)(4) of the Act.

NOTE: Regulations that relate to such quantities as may be harmful of oil are published in 40 CFR Part 110. Regulations that relate to such quantities as may be harmful (reportable quantities) of hazardous substances are published in 40 CFR Part 117 and also listed in 40 CFR Part 302.

(v) *United States* means the States, the District of Columbia, the Commonwealth of Puerto Rico, Guam, American Samoa, the Virgin Islands, and the Trust Territory of the Pacific Islands.

(w) *Vessel* means every description of watercraft or other artificial contrivance used, or capable of being used, as a means of transportation on water other than a public vessel.

[CGD 84–067, 51 FR 17965, May 16, 1986, as amended by CGD 88–052, 53 FR 25121, July 1, 1988; CGD 96–026, 61 FR 33665, June 28, 1996; CGD 97–023, 62 FR 33363, June 19, 1997; USCG–2002–12471, 67 FR 41333, June 18, 2002; USCG–2008–0179, 73 35014, June 19, 2008]

§ 153.105 FWPCA delegations and redelegation.

The delegations and redelegations under the Federal Water Pollution Control Act (FWPCA) [33 U.S.C. 1321 *et seq.*] are published in § 1.01–80 and § 1.01–85, respectively, of this chapter.

[CGD 91–225, 59 FR 66485, Dec. 27, 1994]

§ 153.107 [Reserved]

§ 153.109 CERCLA delegations.

The delegations under the Comprehensive Environmental Response, Compensation, and Liability Act of 1980 (CERCLA) are published in § 1.01–70 of this chapter.

[CGD 83–009, 49 FR 575, Jan. 5, 1984]

Subpart B—Notice of the Discharge of Oil or a Hazardous Substance

§ 153.201 Purpose.

The purpose of this subpart is to prescribe the manner in which the notice required in section 311(b)(5) of the Act is to be given and to list the government officials to receive that notice.

§ 153.203 Procedure for the notice of discharge.

Any person in charge of a vessel or of an onshore or offshore facility shall, as soon as they have knowledge of any discharge of oil or a hazardous substance from such vessel or facility in violation of section 311(b)(3) of the Act, immediately notify the National Response Center (NRC), U.S. Coast Guard, 2100 2nd St., SW., Stop 7238, Washington, DC 20593–7238, *toll free telephone number*: 800–424–8802, *direct telephone:* 202–267–2675, *or Fax:* 202–267–1322. If direct reporting to the NRC is not practicable, reports may be made to the Coast Guard or EPA predesignated OSC for the geographic area where the discharge occurs. All such reports shall be promptly relayed to the NRC. If it is not possible to notify the NRC or the predesignated OSC immediately, reports may be made immediately to the nearest Coast Guard unit, provided that the person in charge of the vessel or onshore or offshore facility notifies the NRC as soon as possible. A report made under this section satisfies the reporting requirements of § 151.15 of this chapter and of 46 CFR 4.05–1, if required under that provision.

NOTE: Geographical jurisdiction of Coast Guard and EPA OSC's are specified in the applicable Regional Contingency Plan. Regional Contingency Plans are available at Coast Guard District Offices and EPA Regional Offices as indicated in Table 2. Addresses and telephone numbers for these offices are listed in Table 1.

[CGD 84–067, 51 FR 17966, May 16, 1986, as amended by CGD 88–052, 53 FR 25121, July 1, 1988; USCG–2000–6927, 70 FR 74675, Dec. 16, 2005; USCG–2006–25150, 71 FR 39209, July 12, 2006; USCG–2008–0179, 73 FR 35014, June 19, 2008; USCG–2010–0351, 75 FR 36284, June 25, 2010]

§ 153.205 Fines.

Section 311(b)(5) of the Act prescribes that any person who fails to notify the appropriate agency of the United States Government immediately of a discharge is, upon conviction, fined in accordance with Title 18, U.S. Code, or imprisoned for not more than 5 years, or both.

TABLE 1—ADDRESSES AND TELEPHONE NUMBERS OF COAST GUARD DISTRICT OFFICES AND EPA REGIONAL OFFICES

	Address	Telephone
EPA Regional Offices		
Region:		
1	1 Congress St., Suite 1100, Boston, MA 02114–2023	617–918–1111
2	290 Broadway, New York, NY 10007–1866	212–637–3000
3	1650 Arch St., Philadelphia, PA 19103–2029	215–814–5000
4	Atlanta Federal Center, 61 Forsyth St., SW, Atlanta, GA 30303–3104	404–562–9900
5	77 West Jackson Boulevard, Chicago, IL 60604–3507	312–353–2000
6	Fountain Place 12th Floor, Suite 1200, 1445 Ross Avenue, Dallas, TX 75202–2733.	214–665–2200
7	901 North 5th St., Kansas City, KS 66101	913–551–7003
8	999 18th St., Suite 500, Denver, CO 80202–2466	303–312–6312
9	75 Hawthorne St., San Francisco, CA 94105	415–744–1305
10	1200 Sixth Avenue, Seattle, WA 98101	206–553–1200
Coast Guard District Offices		
District:		
1st	408 Atlantic Avenue, Boston, MA 02210–3350	617–223–8480
5th	Federal Building, 431 Crawford St., Portsmouth, VA 23704–5004	757–398–6638
7th	909 S.E. First Avenue, Miami, FL 33131–3050	305–536–5651
8th	Hale Boggs Federal Bldg., 500 Camp Street, New Orleans, LA 70130–3396.	504–589–6901
9th	1240 E. 9th St., Cleveland, OH 44199–2060	216–902–6045
11th	Coast Guard Island, Building 50–6, Alameda, CA 94501–5100	510–437–2940
13th	Jackson Federal Bldg., 915 Second Avenue, Seattle, WA 98174–1067	206–220–7090
14th	Prince PJKK Federal Bldg., Room 9212, 300 Ala Moana Blvd., Honolulu, HI 96850–4982.	808–541–2114
17th	P.O. Box 25517, Juneau, AK 99802–5517	907–463–2199

TABLE 2—STANDARD ADMINISTRATIVE REGIONS OF STATES AND CORRESPONDING COAST GUARD DISTRICTS AND EPA REGIONS

States and EPA region	Coast Guard district
Region I:	
Maine	1st
New Hampshire	1st
Vermont:	
All except Northwestern portion	1st
Northwestern portion	1st
Massachusetts	1st
Connecticut	1st
Rhode Island	1st
Region II:	
New York:	
Coastal area and Eastern portion.	1st
Great Lakes area and other portions.	9th
New Jersey:	
Upper portion	1st
Lower portion	5th
Puerto Rico	7th
Virgin Islands	7th
Region III:	
Pennsylvania:	
Eastern portion	5th
Great Lakes area	9th
Southwestern portion	8th

TABLE 2—STANDARD ADMINISTRATIVE REGIONS OF STATES AND CORRESPONDING COAST GUARD DISTRICTS AND EPA REGIONS—Continued

States and EPA region	Coast Guard district
Maryland	5th
Delaware	5th
West Virginia	8th
Virginia	5th
District of Columbia	5th
Region IV:	
Kentucky	8th
Tennessee	8th
North Carolina	5th
South Carolina	7th
Georgia	7th
Florida:	
Atlantic and Gulf coasts	7th
Panhandle area	8th
Alabama	8th
Mississippi	8th
Region V:	
Minnesota:	
Great Lakes area	9th
Inland rivers area	8th
Wisconsin:	
Great Lakes area	9th
Inland rivers area	8th

TABLE 2—STANDARD ADMINISTRATIVE REGIONS OF STATES AND CORRESPONDING COAST GUARD DISTRICTS AND EPA REGIONS—Continued

States and EPA region	Coast Guard district
Michigan	9th
Illinois:	
Great Lakes area	9th
Inland rivers area	8th
Indiana:	
Great Lakes area	9th
Inland rivers area	8th
Ohio:	
Great Lakes area	9th
Inland rivers area	8th
Region VI:	
New Mexico	8th
Texas	8th
Oklahoma	8th
Arkansas	8th
Louisiana	8th
Region VII:	
Nebraska	8th
Iowa	8th
Kansas	8th
Missouri	8th
Region VIII:	
Montana	13th
Wyoming	8th
Utah	11th
Colorado	8th
North Dakota	8th
South Dakota	8th
Region IX:	
California	11th
Nevada	11th
Arizona	11th
Hawaii	14th
Guam	14th
American Samoa	14th
Trust Territory of the Pacific Islands	14th
Northern Mariana Islands	14th
Region X:	
Washington	13th
Oregon	13th
Idaho	13th
Alaska	17th

[CGD 84–067, 51 FR 17967, May 16, 1986, as amended by CGD 88–052, 53 FR 25121, July 1, 1988; CGD 97–023, 62 FR 33364, June 19, 1997; USCG–1998–3799, 63 FR 35530, June 30, 1998; USCG–2000–7223, 65 FR 40057, June 29, 2000]

Subpart C—Removal of Discharged Oil

§ 153.301 Purpose.

The purpose of this subpart is to prescribe methods and procedures to be used to remove discharges of oil from coastal waters.

§ 153.303 Applicability.

The provisions of this subpart apply to any owner or operator of a vessel or onshore or offshore facility from which a discharge of oil into coastal waters occurs who acts to remove or arranges for the removal of such discharges.

§ 153.305 Methods and procedures for the removal of discharged oil.

Each person who removes or arranges for the removal of a discharge of oil from coastal waters shall:

(a) Use to the maximum extent possible mechanical methods and sorbents that:

(1) Most effectively expedite removal of the discharged oil; and

(2) Minimize secondary pollution from the removal operations;

NOTE: The Federal OSC is authorized by the provisions of the National Contingency Plan to require or deny the use of specific mechanical methods and sorbents. Sorbent selection considerations of the OSC include hydrographic and meteorological conditions, characteristics of the sorbent, and availability of a mechanical method for containment and recovery.

(b) Control the source of discharge, prevent further discharges, and halt or slow the spread of the discharge by mechanical methods or sorbents or both to the maximum extent possible;

(c) Recover the discharged oil from the water or adjoining shorelines by mechanical or manual methods or both to the maximum extent possible;

(d) Use chemical agents only in accordance with the provisions of Subpart H of the National Contingency Plan and with the prior approval of the Federal OSC; and

(e) Dispose of recovered oil and oil contaminated materials in accordance with applicable State and local government procedures.

[CGD 73–185, 41 FR 12630, Mar. 25, 1976, as amended by CGD 84–067, 51 FR 17966, May 16, 1986]

§ 153.307 Penalties.

Any person who fails or refuses to comply with the provisions of this part, or to comply with an order issued by the Federal On-Scene Coordinator under 33 U.S.C. §1321(c) or (e)(1)(B), is liable for a civil penalty per day of violation or an amount equal to three times the costs incurred by the Oil

Spill Liability Trust Fund as a result of such failure.

[USCG–1998–3799, 63 FR 35531, June 30, 1998]

Subpart D—Administration of the Pollution Fund

§ 153.401 Purpose.

This subpart prescribes policies, procedures, and reporting requirements for the payment from and deposit into the Fund established pursuant to section 311(k) of the Act.

§ 153.403 Applicability.

The provisions of this subpart apply to:

(a) Each Federal and State agency that desires reimbursement from the Fund for costs incurred during a removal activity; and

(b) The owner or operator of the vessel or onshore or offshore facility from which a discharge occurs that requires Federal removal activity.

§ 153.405 Liability to the pollution fund.

The owner or operator of the vessel or onshore or offshore facility from which a discharge occurs that requires Federal removal activity is liable to the pollution fund for the actual costs of Federal and State agencies, including the employment and use of personnel and equipment, not to exceed the limits established by sections 311(f) and (g) of the Act.

§ 153.407 Payments or reimbursements from the pollution fund.

(a) The following costs incurred during performance of a Phase III activity as defined in Subpart E of the National Contingency Plan, or a removal action as defined in Subpart F of the National Contingency Plan, are reimbursable to Federal and State agencies when authorized by the appropriate OSC under the authority of section 311(c) of the Act, and are reimbursable to Federal agencies when authorized by the appropriate Coast Guard or EPA official in the case of the summary removal or destruction of a vessel, other ''intervention'' (as defined in § 153.105(e) of this part), or any other action under the authority of section 311(d) of the Act or the Intervention on the High Seas Act (33 U.S.C. 1471 *et seq.*):

(1) Costs found to be reasonable by the Coast Guard incurred by government industrial type facilities, including charges for overhead in accordance with the agency's industrial accounting system.

(2) Actual costs for which an agency is required or authorized by any law to obtain full reimbursement.

(3) Costs found to be reasonable by the Coast Guard incurred as a result of removal activity that are not ordinarily funded by an agency's regular appropriations and that are not incurred during normal operations. These costs include, but are not limited to, the following:

(i) Travel (transportation and per diem) specifically requested of the agency by the On-Scene Coordinator.

(ii) Overtime for civilian personnel specifically requested of the agency by the On-Scene Coordinator.

(iii) Incremental operating costs for vessels, aircraft, vehicles, and equipment incurred in connection with the removal activity.

(iv) Supplies, materials, and equipment procured for the specific removal activity and fully expended during the removal activity.

(v) Lease or rental of equipment for the specific removal activity.

(vi) Contract costs for the specific removal activity.

(4) Claims payable under part 25, subpart H of this title.

(b) The District Commander may authorize the direct payment of the costs found to be reasonable under paragraph (a)(3) of this section. Direct payment may only be made to Federal or State agencies, or to Federal contractors or suppliers. Direct payments to State or local agency contractors or suppliers will not be authorized.

(c) The Pollution Fund is not available to pay any foreign, Federal, State or local government or agency for the payment or reimbursement of its costs incurred in the removal of oil or hazardous substances discharged from a vessel or facility that it owns or operates.

NOTE: Federal procurement procedures governing contracts to purchase property and services apply to costs incurred as a result of removal activity. Where the public

exigency will not permit the delay incident to advertising, purchases and contracts are negotiated pursuant to 10 U.S.C. 2304(a)(2) or 41 U.S.C. 252(c)(2), as applicable.

[CGD 73–185, 41 FR 12630, Mar. 25, 1976, as amended by CGD 84–067, 51 FR 17967, May 16, 1986]

§ 153.411 Procedures for payment of judgments.

An owner or operator of a vessel or an onshore or offshore facility who obtains a judgment against the United States under section 311(i) of the Act may have the judgment satisfied by requesting payment of the judgment in writing from the Commandant (CG–094), 2100 2nd St., SW., Stop 7238, Washington, DC 20593–7238. This request must be accompanied by a copy of the judgment and must designate to whom payment should be made.

[CGD 73–185, 41 FR 12630, Mar. 25, 1976, as amended at USCG–2010–0351, 75 FR 36284, June 25, 2010]

§ 153.413 Deposit of money into the fund.

Any person liable for the payment of the following shall remit payment by check or postal money order, payable to the U.S. Coast Guard, to the cognizant District Commander, or to the Commandant for deposit into the Pollution Fund as prescribed in section 311(k) of the Act:

(a) A fine or penalty imposed, assessed, or compromised under section 311 of the Act, including the proceeds of a bond or other surety obtained pursuant to section 311(b)(6).

(b) A claim asserted by the cognizant District Commander for costs recoverable under sections 311 (f) and (g) of the Act.

(c) A judgment obtained by the United States for costs recoverable under sections 311 (f) and (g) of the Act.

§ 153.415 Cost summary reports.

As soon as practicable after completion of an action authorized under section 311 (c) or (d) of the Act or the Intervention on the High Seas Act, the OSC submits a cost summary report to the cognizant District Commander that includes:

(a) Names of agencies and contractors authorized to participate in the action;

(b) A general description of the function performed by each participating agency and contractor;

(c) An estimate of the cost of each function performed by each participating agency and contractor; and

(d) A copy of contracts, memoranda, or other documents pertaining to the functions performed by the participating agencies and contractors.

[CGD 73–185, 41 FR 12630, Mar. 25, 1976, as amended by CGD 84–067, 51 FR 17967, May 16, 1986]

§ 153.417 Reimbursement for actions under section 311(c) or 311(d) of the Act of the Intervention on the High Seas Act.

(a) Each Federal or State agency requesting reimbursement for an action authorized under section 311(c) or 311(d) of the Act or under the Intervention on the High Seas Act must, within 60 days after completion of the action, submit to the cognizant District Commander, through the OSC for review and certification required in paragraph (b) of this section, lists accompanied by supporting accounting data, itemizing actual costs incurred.

(b) Requests for reimbursement submitted by Federal and State agencies are reviewed by the OSC to ensure that the costs for which reimbursement is being sought were authorized as Phase III removal actions for oil discharges, or removal actions as defined in Subpart F for hazardous substance discharges, and must have one of the following certifications by the OSC, as appropriate:

(1) I certify that the actions for which reimbursement is being requested in the attached statements were authorized by me as [(Phase III oil removal actions) or (hazardous substance removal actions)], and reasonable costs related thereto are proper for payment from the Pollution Fund.

_____
(OSC signature)

_____
(Incident title)

_____
(Pollution incident project number)

(2) I certify that, except as noted below, the actions for which reimbursement is being requested in the attached statements were authorized by me as [(Phase III oil removal actions) or (hazardous substance removal actions)], and reasonable costs related thereto are proper for payment from the Pollution Fund. The following actions were not authorized by me and are not subject to reimbursement from the Pollution Fund:

(OSC Signature)

(Incident title)

(Pollution incident project number)

[CGD 84–067, 51 FR 17967, May 16, 1986]

PART 154—FACILITIES TRANSFERRING OIL OR HAZARDOUS MATERIAL IN BULK

Subpart A—General

Sec.
154.100 Applicability.
154.105 Definitions.
154.106 Incorporation by reference.
154.107 Alternatives.
154.108 Exemptions.
154.110 Letter of intent.
154.120 Facility examinations.

Subpart B—Operations Manual

154.300 Operations manual: General.
154.310 Operations manual: Contents.
154.320 Operations manual: Amendment.
154.325 Operations manual: Procedures for examination.

Subpart C—Equipment Requirements

154.500 Hose assemblies.
154.510 Loading arms.
154.520 Closure devices.
154.525 Monitoring devices.
154.530 Small discharge containment.
154.540 Discharge removal.
154.545 Discharge containment equipment.
154.550 Emergency shutdown.
154.560 Communications.
154.570 Lighting.

Subpart D—Facility Operations

154.700 General.
154.710 Persons in charge: Designation and qualification.
154.730 Persons in charge: Evidence of designation.
154.735 Safety requirements.
154.740 Records.
154.750 Compliance with operations manual.

Subpart E [Reserved]

Subpart F—Response Plans for Oil Facilities

154.1010 Purpose.
154.1015 Applicability.
154.1016 Facility classification by COTP.
154.1017 Response plan submission requirements.
154.1020 Definitions.
154.1025 Operating restrictions and interim operating authorization.
154.1026 Qualified individual and alternate qualified individual.
154.1028 Methods of ensuring the availability of response resources by contract or other approved means.
154.1029 Worst case discharge.
154.1030 General response plan contents.
154.1035 Specific requirements for facilities that could reasonably be expected to cause significant and substantial harm to the environment.
154.1040 Specific requirements for facilities that could reasonably be expected to cause substantial harm to the environment.
154.1041 Specific response information to be maintained on mobile MTR facilities.
154.1045 Response plan development and evaluation criteria for facilities that handle, store, or transport Group I through Group IV petroleum oils.
154.1047 Response plan development and evaluation criteria for facilities that handle, store, or transport Group V petroleum oils.
154.1050 Training.
154.1055 Exercises.
154.1057 Inspection and maintenance of response resources.
154.1060 Submission and approval procedures.
154.1065 Plan review and revision procedures.
154.1070 Deficiencies.
154.1075 Appeal process.

Subpart G—Additional Response Plan Requirements for a Trans-Alaska Pipeline Authorization Act (TAPAA) Facility Operating in Prince William Sound, Alaska

154.1110 Purpose and applicability.
154.1115 Definitions.
154.1120 Operating restrictions and interim operating authorization.
154.1125 Additional response plan requirements.
154.1130 Requirements for prepositioned response equipment.
154.1135 Response plan development and evaluation criteria.

154.1140 TAPAA facility contracting with a vessel.

Subpart H—Response Plans for Animal Fats and Vegetable Oils Facilities

154.1210 Purpose and applicability.
154.1216 Facility classification.
154.1220 Response plan submission requirements.
154.1225 Specific response plan development and evaluation criteria and other requirements for fixed facilities that handle, store, or transport animal fats or vegetable oils.
154.1228 Methods of ensuring the availability of response resources by contract or other approved means.
154.1240 Specific requirements for animal fats and vegetable oils facilities that could reasonably be expected to cause substantial harm to the environment.

Subpart I—Response Plans for Other Non-Petroleum Oil Facilities

154.1310 Purpose and applicability.
154.1320 Response plan submission requirements.
154.1325 Response plan development and evaluation criteria for facilities that handle, store, or transport other non-petroleum oils.

Subparts J–O [Reserved]

Subpart P—Marine Vapor Control Systems

GENERAL

154.2000 Applicability.
154.2001 Definitions.

CERTIFYING ENTITIES

154.2010 Qualifications for acceptance as a certifying entity.
154.2011 Application for acceptance as a certifying entity.

CERTIFICATION, RECERTIFICATION, AND OPERATIONAL REVIEW

154.2020 Certification and recertification—owner/operator responsibilities.
154.2021 Operational review—owner/operator responsibilities.
154.2022 Certification, recertification, or operational review—certifying entity responsibilities, generally.
154.2023 Recertification—certifying entity responsibilities, generally.
154.2024 Operational review—certifying entity responsibilities, generally.
154.2025 Certification, recertification, or operational review—certifying entity documentation.

PERSONNEL

154.2030 Transfer facilities.
154.2031 Tank barge cleaning facilities.

TRANSFER FACILITIES—VCS DESIGN AND INSTALLATION

154.2100 Vapor control system, general.
154.2101 Requirements for facility vapor connections.
154.2102 Facility requirements for vessel liquid overfill protection.
154.2103 Facility requirements for vessel vapor overpressure and vacuum protection.
154.2104 Pigging system.
154.2105 Fire, explosion, and detonation protection.
154.2106 Detonation arresters installation.
154.2107 Inerting, enriching, and diluting systems.
154.2108 Vapor-moving devices.
154.2109 Vapor recovery and vapor destruction units.
154.2110 Vapor balancing requirements.
154.2111 Vapor control system connected to a facility's main vapor control system.
154.2112 Vapors with potential to polymerize or freeze—Special requirements.
154.2113 Alkylene oxides—Special requirements.

TRANSFER FACILITIES—OPERATIONS

154.2150 General requirements.

ALTERNATIVE ANALYZER AND PRESSURE SENSOR RELIABILITY TESTING

154.2180 Alternative testing program—Generally.
154.2181 Alternative testing program—Test requirements.

TANK BARGE CLEANING FACILITIES—VCS DESIGN AND INSTALLATION

154.2200 Applicable transfer facility design and installation requirements.
154.2201 Vapor control system—General requirements.
154.2202 Vapor line connections.
154.2203 Facility requirements for barge vapor overpressure and vacuum protection.
154.2204 Fire, explosion, and detonation protection.

TANK BARGE CLEANING FACILITIES—OPERATIONS

154.2250 General requirements.

APPENDIX A TO PART 154—GUIDELINES FOR DETONATION FLAME ARRESTERS
APPENDIX B TO PART 154 [RESERVED]
APPENDIX C TO PART 154—GUIDELINES FOR DETERMINING AND EVALUATING REQUIRED RESPONSE RESOURCES FOR FACILITY RESPONSE PLANS

APPENDIX D TO PART 154—TRAINING ELEMENTS FOR OIL SPILL RESPONSE PLANS

AUTHORITY: 33 U.S.C. 1225, 1231, 1321(j)(1)(C), (j)(5), (j)(6), and (m)(2); sec. 2, E.O. 12777, 56 FR 54757; Department of Homeland Security Delegation No. 0170.1. Subpart F is also issued under 33 U.S.C. 2735. Vapor control recovery provisions of Subpart P are also issued under 42 U.S.C. 7511b(f)(2).

Subpart A—General

§ 154.100 Applicability.

(a) This part applies to each facility that is capable of transferring oil or hazardous materials, in bulk, to or from a vessel, where the vessel has a total capacity, from a combination of all bulk products carried, of 39.75 cubic meters (250 barrels) or more. This part does not apply to the facility when it is in a caretaker status. This part does not apply to any offshore facility operating under the jurisdiction of the Secretary of the Department of Interior.

(b) Upon written notice to the facility operator, the COTP may apply, as necessary for the safety of the facility, its personnel, or the public, all or portions of § 154.735 to each facility that is capable of transferring oil or hazardous material, in bulk, only to or from a vessel with a capacity of less than 250 barrels. If the facility is in caretaker status, the COTP may not apply the provisions of § 154.735 to the facility if its storage tanks and piping are gas free.

(c) Upon a determination by the COTP under § 154.1016 that an MTR facility, as defined in subpart F, could reasonably be expected to cause substantial harm to the environment by discharging oil into or on the navigable waters, adjoining shorelines, or exclusive economic zone, subpart F of this part is applicable to the facility.

(d) The following sections of this part apply to mobile facilities:

(1) Section 154.105 Definitions.

(2) Section 154.107 Alternatives.

(3) Section 154.108 Exemptions.

(4) Section 154.110 Letter of Intent.

(5) Section 154.120 Facility examinations.

(6) Section 154.300 Operations Manual: General.

(7) Section 154.310 Operations Manual: Contents. Paragraphs (a)(2), (a)(3), (a)(5) through (a)(7), (a)(9), (a)(12), (a)(14), (a)(16), (a)(17)(ii) through (a)(17)(iv), (a)(18), (a)(20) through (23), (c) and (d).

(8) Section 154.320 Operations Manual: Amendment.

(9) Section 154.325 Operations Manual: Procedures for examination.

(10) Section 154.500 Hose assemblies. Paragraphs (a), (b), (c), (d)(1) through (3) and (e)(1) through (3).

(11) Section 154.520 Closure devices.

(12) Section 154.530 Small discharge containment. Paragraphs (a)(1) through (3) and (d).

(13) Section 154.545 Discharge containment equipment.

(14) Section 154.550 Emergency shutdown.

(15) Section 154.560 Communications.

(16) Section 154.570 Lighting. Paragraphs (c) and (d).

(17) Section 154.700 General.

(18) Section 154.710 Persons in charge: Designation and qualification. Paragraphs (a) through (c), (d)(1) through (3), (d)(7) and (e).

(19) Section 154.730 Persons in charge: Evidence of designation.

(20) Section 154.735 Safety requirements. Paragraphs (d), (f), (g), (j)(1) through (2), (k)(1) through (2), (m), (o) through (q), (r)(1) through (3), (s) and (v).

(21) Section 154.740 Records. Paragraphs (a) through (f) and (j).

(22) Section 154.750 Compliance with Operations Manual.

[CGD 86–034, 55 FR 36252, Sept. 4, 1990, as amended by CGD 91–036, 58 FR 7352, Feb. 5, 1993; CGD 93–056, 61 FR 41457, Aug. 8, 1996]

§ 154.105 Definitions.

As used in this part:

Barrel means a quantity of liquid equal to 42 U.S. gallons.

Boundary Line means any of the lines described in 46 CFR part 7.

Captain of the Port (COTP) means the U.S. Coast Guard officer commanding a Captain of the Port Zone described in part 3 of this chapter, or that person's authorized representative.

Caretaker status denotes a facility where all piping, hoses, loading arms, storage tanks, and related equipment in the marine transfer area are completely free of oil or hazardous materials, where these components have been certified as being gas free, where

piping, hoses, and loading arms terminating near any body of water have been blanked, and where the facility operator has notified the COTP that the facility will be in caretaker status.

Commandant means the Commandant of the Coast Guard or an authorized representative.

Contiguous Zone means the entire zone established by the United States under Article 24 of the Convention on the Territorial Sea and the Contiguous Zone, but not extending beyond 12 miles from the baseline from which the breadth of the territorial sea is measured.

District Commander means the officer of the Coast Guard designated by the Commandant to command a Coast Guard District, as described in part 3 of this chapter or an authorized representative.

Facility means either an onshore or offshore facility, except for an offshore facility operating under the jurisdiction of the Secretary of the Department of Interior, and includes, but is not limited to, structure, equipment, and appurtenances thereto, used or capable of being used to transfer oil or hazardous materials to or from a vessel or public vessel. Also included are facilities that tank clean or strip and any floating structure that is used to support an integral part of the facility's operation. A facility includes federal, state, municipal, and private facilities.

Facility operator means the person who owns, operates, or is responsible for the operation of the facility.

Hazardous material means a liquid material or substance, other than oil or liquefied gases, listed under 46 CFR 153.40 (a), (b), (c), or (e).

Marine transfer area means that part of a waterfront facility handling oil or hazardous materials in bulk between the vessel, or where the vessel moors, and the first manifold or shutoff valve on the pipeline encountered after the pipeline enters the secondary containment required under 40 CFR 112.7 or 49 CFR 195.264 inland of the terminal manifold or loading arm, or, in the absence of secondary containment, to the valve or manifold adjacent to the bulk storage tank, including the entire pier or wharf to which a vessel transferring oil or hazardous materials is moored.

MARPOL 73/78 means the International Convention for the Prevention of Pollution from Ships, 1973 (done at London, November 2, 1973) as modified by the Protocol of 1978 relating to the International Convention for the Prevention of Pollution from Ships, 1973 (done at London, February 17, 1978).

Mobile facility means any facility that can readily change location, such as a tank truck or tank car, other than a vessel or public vessel.

Monitoring device means any fixed or portable sensing device used to monitor for a discharge of oil or hazardous material onto the water, within or around a facility, and designed to notify operating personnel of a discharge of oil or hazardous material.

Officer in Charge, Marine Inspection (OCMI) means the U.S. Coast Guard officer commanding a Marine Inspection Zone described in part 3 of this chapter, or an authorized representative.

Offshore facility means any facility of any kind located in, on, or under, any of the navigable waters of the United States, and any facility of any kind which is subject to the jurisdiction of the United States and is located in, on, or under any other waters, other than a vessel or a public vessel.

Oil means oil of any kind or in any form, including but not limited to, petroleum, fuel oil, sludge, oil refuse, and oil mixed with wastes other than dredged spoil.

Onshore facility means any facility (including, but not limited to, motor vehicles and rolling stock) of any kind located in, on, or under any land within the United States other than submerged land.

Person in charge means an individual designated as a person in charge of transfer operations under §154.710 (for facilities) or §155.700 (for vessels) of this chapter.

STCW means the International Convention on Standards of Training, Certification, and Watchkeeping for Seafarers, 1978.

Self-propelled tank vessel means a self-propelled tank vessel other than a tankship.

Tank barge means a non-self-propelled tank vessel.

Tankship means a self-propelled tank vessel constructed or adapted primarily to carry oil or hazardous material in bulk in the cargo spaces.

Tank vessel means a vessel that is constructed or adapted to carry, or that carries, oil or hazardous material in bulk as cargo or cargo residue, and that—

(a) Is a vessel of the United States;

(b) Operates on the navigable waters of the United States; or

(c) Transfers oil or hazardous material in a port or place subject to the jurisdiction of the United States.

Transfer means any movement of oil or hazardous material to, from, or within a vessel by means of pumping, gravitation, or displacement. A transfer is considered to begin when the person in charge on the transferring vessel or facility and the person in charge on the receiving facility or vessel first meet to begin completing the declaration of inspection as required by § 156.150 of this chapter. A transfer is considered to be complete when all the connections for the transfer have been uncoupled and secured with blanks or other closure devices and both of the persons in charge have completed the declaration of inspection to include the date and time the transfer was complete.

Vessel operator means a person who owns, operates, or is responsible for the operation of a vessel.

[CGD 75–124, 45 FR 7169, Jan. 31, 1980, as amended by CGD 86–034, 55 FR 36252, Sept. 4, 1990; CGD 79–116, 60 FR 17141, Apr. 4, 1995; CGD 93–056, 61 FR 41458, Aug. 8, 1996; 62 FR 3610, Jan. 24, 1997; CGD 79–116, 62 FR 25125, May 8, 1997]

§ 154.106 Incorporation by reference.

(a) Certain material is incorporated by reference (IBR) into this part with the approval of the Director of the Federal Register under 5 U.S.C. 552(a) and 1 CFR part 51. To enforce any edition other than that specified in this section, the Coast Guard must publish a notice of change in the FEDERAL REGISTER and the material must be available to the public. All approved material is available for inspection at the Coast Guard, Office of Design and Engineering Standards (CG–ENG), 2100 2nd Street SW., Stop 7126, Washington, DC 20593–7126, telephone 202–372–1418 and at the National Archives and Records Administration (NARA). For information on the availability of this material at NARA, call 202–741–6030 or go to *http://www.archives.gov/federal_register/code_of_federal_regulations/ibr_locations.html*. Also, it is available from the sources indicated in this section.

(b) American National Standards Institute (ANSI), 25 West 43rd Street, 4th floor, New York, NY 10036.

(1) ANSI B16.5, Steel Pipe Flanges and Flanged Fittings, 1988, IBR approved for §§ 154.500(d), 154.2100(b), 154.2101(d), 154.2202(d), and Appendix A, 7.3 to part 154.

(2) ANSI B16.24, Bronze Pipe Flanges and Flange Fittings Class 150 and 300, 1979, IBR approved for §§ 154.500(d) and 154.2100(b).

(3) ANSI B31.3, Chemical Plant and Petroleum Refinery Piping, 1987 (including B31.3a–1988, B31.3b–1988, and B31.3c–1989 addenda), IBR approved for §§ 154.510(a) and 154.2100(b).

(c) American Petroleum Institute (API), 1220 L Street NW., Washington, DC 20005.

(1) API Standard 2000, Venting Atmospheric and Low-Pressure Storage Tanks (Non-refrigerated and Refrigerated), Third Edition, January 1982 (reaffirmed December 1987)(''API 2000''), IBR approved for §§ 154.2103(j) and 154.2203(e), (k), and (l).

(2) API Recommended Practice 550, Manual on Installation of Refinery Instruments and Control Systems, Part II—Process Stream Analyzers, Section 1—Oxygen Analyzers, Fourth Edition, February 1985 (''API 550''), IBR approved for § 154.2107(f).

(d) American Society of Mechanical Engineers (ASME), Three Park Avenue, New York, NY 10016.

(1) ASME B16.34 -2004, Valves—Flanged, Threaded, and Welding End, issued September 2, 2005, IBR approved for § 154.2100(b).

(2) [Reserved]

(e) ASTM International (ASTM), 100 Barr Harbor Drive, West Conshohocken, PA 19428–2959.

(1) ASTM F631–93, Standard Guide for Collecting Skimmer Performance Data in Controlled Environments (''ASTM

F631''), IBR approved for Appendix C, 6.3 to part 154.

(2) ASTM F715–95, Standard Test Methods for Coated Fabrics Used for Oil Spill Control and Storage (''ASTM F715''), IBR approved for Appendix C, 2.3.1 to part 154.

(3) ASTM F722–82 (Reapproved 2008), Standard Specification for Welded Joints for Shipboard Piping Systems (''ASTM F722''), approved November 1, 2008, IBR approved for Appendix A, 8.4, 8.6 to part 154.

(4) ASTM F1122–87 (Reapproved 1992), Standard Specification for Quick Disconnect Couplings (''ASTM F1122''), IBR approved for § 154.500(d).

(5) ASTM F1155–98, Standard Practice for Selection and Application of Piping System Materials (''ASTM F1155''), IBR approved for Appendix A, 7.1, 8.4 to part 154.

(6) ASTM F1273–91 (Reapproved 2007) Standard Specification for Tank Vent Flame Arresters (''ASTM F1273''), approved December 1, 2007, IBR approved for §§ 154.2001 and 154.2105(j).

(f) International Electrotechnical Commission (IEC), Bureau Central de la Commission Electrotechnique Internationale, 3, rue de Varembé, P.O. Box 131, CH—1211 Geneva 20, Switzerland.

(1) IEC 60309–1 Plugs, Socket-Outlets and Couplers for Industrial Purposes—Part 1: General Requirements, Edition 4.2 2012–06, IBR approved for § 154.2102(b).

(2) IEC 60309–2 Plugs, Socket-Outlets and Couplers for Industrial Purposes—Part 2: Dimensional Interchangeability Requirements for Pin and Contact-tube Accessories, Edition 4.2 2012–05, IBR approved for § 154.2102(b).

(g) National Electrical Manufacturers Association (NEMA), 1300 North 17th Street, Suite 1752, Rosslyn, VA 22209.

(1) ANSI NEMA WD–6—Wiring Devices, Dimensional Requirements, 1988 (''NEMA WD–6''), IBR approved for § 154.2102(a).

(2) [Reserved]

(h) National Fire Protection Association (NFPA), 1 Batterymarch Park, Quincy, MA 02169–7471.

(1) NFPA 51B, Standard for Fire Prevention in Use of Cutting and Welding Processes, 1994, IBR approved for § 154.735(l).

(2) NFPA 70, National Electrical Code, 1987 (''NFPA 70 (1987)''), IBR approved for § 154.735(q).

(3) NFPA 70, National Electrical Code, 2011 (''NFPA 70 (2011)''), IBR approved for §§ 154.2100(c) and 154.2102(a).

(i) Oil Companies International Marine Forum (OCIMF), 29 Queen Anne's Gate, London, SW1H 9BU, England.

(1) International Safety Guide for Oil Tankers and Terminals, Fifth Ed., 2006 (''ISGOTT''), IBR approved for §§ 154.735(s), 154.2101(g), and 154.2203(m).

(2) [Reserved]

(j) Underwriters Laboratories, Inc. (UL), 333 Pfingsten Road, Northbrook, IL 60062.

(1) UL 525 Standard for Flame Arresters, 8th Edition, May 9, 2008, IBR approved for §§ 154.2001 and 154.2105(j).

(2) [Reserved]

[USCG–1999–5150, 78 FR 42616, July 16, 2013]

§ 154.107 Alternatives.

(a) The COTP may consider and approve alternative procedures, methods, or equipment standards to be used by a facility operator in lieu of any requirement in this part if:

(1) Compliance with the requirement is economically or physically impractical;

(2) The alternative provides an equivalent level of safety and protection from pollution by oil or hazardous material, which is documented in the request; and

(3) The facility operator submits a written request for the alternative.

(b) The COTP takes final approval or disapproval action on the request, submitted in accordance with paragraph (a) of this section, in writing within 30 days of receipt of the request.

[CGD 75–124, 45 FR 7169, Jan. 31, 1980, as amended by CGD 86–034, 55 FR 36252, Sept. 4, 1990; CGD 93–056, 61 FR 41458, Aug. 8, 1996]

§ 154.108 Exemptions.

(a) The Assistant Commandant for Marine Safety, Security and Environmental Protection, acting for the Commandant, grants an exemption or partial exemption from compliance with any requirement in this part if:

(1) A facility operator submits an application for the exemption via the COTP; and

(2) It is determined, from the application, that:

(i) Compliance with the requirement is economically or physically impractical;

(ii) No alternative procedures, methods, or equipment standards exist that would provide an equivalent level of safety and protection from pollution by oil or hazardous material; and

(iii) The likelihood of oil or hazardous material being discharged is not substantially increased as a result of the exemption.

(b) If requested, the applicant must submit any appropriate information, including an environmental and economic assessment of the effects of and reasons for the exemption, and proposed procedures, methods or equipment standards.

(c) The exemption may specify the procedures, methods, or equipment standards that will apply.

(d) An exemption is granted or denied in writing. The decision of the Assistant Commandant for Marine Safety, Security and Environmental Protection is a final agency action.

[CGD 75–124, 45 FR 7169, Jan. 31, 1980, as amended by CGD 88–052, 53 FR 25122, July 1, 1988; CGD 86–034, 55 FR 36252, Sept. 4, 1990; 55 FR 49997, Dec. 4, 1990; CGD 96–026, 61 FR 33666, June 28, 1996; CGD 93–056, 61 FR 41458, Aug. 8, 1996; CGD 97–023, 62 FR 33364, June 19, 1997; USCG–2002–12471, 67 FR 41333, June 18, 2002]

§ 154.110 Letter of intent.

(a) The facility operator of any facility to which this part applies must submit a letter of intent to operate a facility or to conduct mobile facility operations to the COTP not less than 60 days before the intended operations unless a shorter period is allowed by the COTP. Previously submitted letters of intent need not be resubmitted.

(b) The letter of intent required by paragraph (a) of this section may be in any form but must contain:

(1) The names, addresses, and telephone numbers of the facility operator and the facility owner;

(2) The name, address, and telephone number of the facility or, in the case of a mobile facility, the dispatching office; and

(3) Except for a mobile facility, the geographical location of the facility in relation to the associated body of navigable waters.

(c) The facility operator of any facility for which a letter of intent has been submitted, shall within five (5) days advise the COTP in writing of any changes of information and shall cancel, in writing, the letter for any facility at which transfer operations are no longer conducted.

[CGD 75–124, 45 FR 7169, Jan. 31, 1980, as amended by CGD 86–034, 55 FR 36252, Sept. 4, 1990; CGD 93–056, 61 FR 41458, Aug. 8, 1996]

§ 154.120 Facility examinations.

(a) The facility operator shall allow the Coast Guard, at any time, to make any examination and shall perform, upon request, any test to determine compliance with this part and part 156, as applicable. The facility operator shall conduct all required testing of facility equipment in a manner acceptable to the Coast Guard.

(b) The COTP shall provide the facility operator with a written report of the results of the examination for the record required by § 154.740(e) and shall list the deficiencies in the report when the facility is not in compliance with the requirements in this part and part 156 of this chapter.

[CGD 75–124, 45 FR 7169, Jan. 31, 1980]

Subpart B—Operations Manual

§ 154.300 Operations manual: General.

(a) The facility operator of each facility to which this part applies shall submit, with the letter of intent, two copies of an Operations Manual that:

(1) Describes how the applicant meets the operating rules and equipment requirements prescribed by this part and part 156 of this chapter;

(2) Describes the responsibilities of personnel under this part and part 156 of this chapter in conducting transfer operations; and

(3) Includes translations into a language or languages understood by all designated persons in charge of transfer operations employed by the facility.

(b) The facility operator shall maintain the operations manual so that it is:

(1) Current; and

(2) Readily available for examination by the COTP.

(c) The COTP shall examine the Operations Manual when submitted, after any substantial amendment, and as otherwise required by the COTP.

(d) In determining whether the manual meets the requirements of this part and part 156 of this chapter the COTP shall consider the size, complexity, and capability of the facility.

(e) If the manual meets the requirements of this part and part 156 of this chapter, the COTP will return one copy of the manual marked ''Examined by the Coast Guard'' as described in § 154.325.

(f) The facility operator shall ensure that a sufficient number of copies of the examined Operations Manual, including a sufficient number of the translations required by paragraph (a)(3) of this section, are readily available for each facility person in charge while conducting a transfer operation.

NOTE: The facility operator may request that the contents of the operations manual or portions thereof be considered commercial or financial information that is privileged or confidential. Under the Freedom of Information Act, the Coast Guard would withhold any part of the contents of the operations manual from public disclosure upon determining that it is commercial or financial information that is privileged or confidential.

[CGD 75–124, 45 FR 7169, Jan. 31, 1980, as amended by CGD 86–034, 55 FR 36253, Sept. 4, 1990; CGD 93–056, 61 FR 41458, Aug. 8, 1996]

§ 154.310 Operations manual: Contents.

(a) Each operations manual required by § 154.300 must contain:

(1) The geographic location of the facility;

(2) A physical description of the facility including a plan and/or plans, maps, drawings, aerial photographs or diagrams, showing the boundaries of the facility subject to Coast Guard jurisdiction, mooring areas, transfer locations, control stations, wharfs, the extent and scope of the piping subject to the tests required by § 156.170(c)(4) of this chapter, and the locations of safety equipment. For mobile facilities, a physical description of the facility;

(3) The hours of operation of the facility;

(4) The sizes, types, and number of vessels that the facility can transfer oil or hazardous material to or from simultaneously;

(5) For each product transferred at the facility:

(i) Generic or chemical name; and

(ii) The following cargo information:

(*a*) The name of the cargo as listed under appendix II of annex II of MARPOL 73/78, Table 30.25–1 of 46 CFR 30.25–1, Table 151.05 of 46 CFR 151.05–1, or Table 1 of 46 CFR part 153.

(*b*) A description of the appearance of the cargo;

(*c*) A description of the odor of the cargo;

(*d*) The hazards involved in handling the cargo;

(*e*) Instructions for safe handling of the cargo;

(*f*) The procedures to be followed if the cargo spills or leaks, or if a person is exposed to the cargo; and

(*g*) A list of fire fighting procedures and extinguishing agents effective with fires involving the cargo.

(6) The minimum number of persons on duty during transfer operations and their duties;

(7) The name and telephone number of the qualified individual identified under § 154.1026 of this part and the title and/or position and telephone number of the Coast Guard, State, local, and other personnel who may be called by the employees of the facility in an emergency;

(8) The duties of watchmen, required by § 155.810 of this chapter and 46 CFR 35.05–15, for unmanned vessels moored at the facility;

(9) A description of each communication system required by this part;

(10) The location and facilities of each personnel shelter, if any;

(11) A description and instructions for the use of drip and discharge collection and vessel slop reception facilities, if any;

(12) A description and the location of each emergency shutdown system;

(13) Quantity, types, locations, and instructions for use of monitoring devices if required by § 154.525;

(14) Quantity, type, location, instructions for use, and time limits for gaining access to the containment equipment required by § 154.545;

(15) Quantity, type, location, and instructions for use of fire extinguishing

equipment required by §154.735(d) of this part;

(16) The maximum allowable working pressure (MAWP) of each loading arm, transfer pipe system, and hose assembly required to be tested by §156.170 of this chapter, including the maximum relief valve setting (or maximum system pressure when relief valves are not provided) for each transfer system;

(17) Procedures for:

(i) Operating each loading arm including the limitations of each loading arm;

(ii) Transferring oil or hazardous material;

(iii) Completion of pumping; and

(iv) Emergencies;

(18) Procedures for reporting and initial containment of oil or hazardous material discharges;

(19) A brief summary of applicable Federal, state, and local oil or hazardous material pollution laws and regulations;

(20) Procedures for shielding portable lighting authorized by the COTP under §154.570(c); and

(21) A description of the training and qualification program for persons in charge.

(22) Statements explaining that each hazardous materials transfer hose is marked with either the name of each product which may be transferred through the hose or with letters, numbers, symbols, color codes or other system acceptable to the COTP representing all such products and the location in the Operations Manual where a chart or list of symbols utilized is located and a list of the compatible products which may be transferred through the hose can be found for consultation before each transfer; and

(23) For facilities that conduct tank cleaning or stripping operations, a description of their procedures.

(b)(1) The operations manual must contain a description of the facility's vapor control system (VCS), if the facility—

(i) Collects vapor emitted from vessel cargo tanks for recovery, destruction, or dispersion; or

(ii) Balances or transfers vapor to or from vessel cargo tanks.

(2) The VCS description required by paragraph (b)(1) of this section must include a line diagram or simplified piping and instrumentation diagram (P&ID) of the facility's VCS piping, including the location of each valve, control device, pressure-vacuum relief valve, pressure indicator, flame arrester, and detonation arrester;

(3) The VCS description required by paragraph (b)(1) of this section must describe the design and operation of its—

(i) Vapor line connection;

(ii) Startup and shutdown procedures;

(iii) Steady-state operating procedures;

(iv) Provisions for dealing with pyrophoric sulfide (for facilities which handle inerted vapors of cargoes containing sulfur);

(v) Alarms and shutdown devices; and

(vi) Pre-transfer equipment inspection requirements.

(4) The VCS description required by paragraph (b)(1) of this section must include all test procedures and a checklist for use during the testing of the VCS required by 33 CFR 156.170(g). The test procedures must specify—

(i) All tests required for initial certification under 33 CFR 154.2022(d);

(ii) All components that are to be tested; and

(iii) Procedures for testing each component.

(5) The VCS description required by paragraph (b)(1) of this section must include—

(i) A list of all cargoes the VCS is approved to control; and

(ii) Copies of any Coast Guard letters exempting the VCS from regulatory requirements.

(6) The VCS description required by paragraph (b)(1) of this section must include detailed operating instructions for a cargo line clearance system as described in 33 CFR 154.2104, if such a system is used by a facility;

(7) The VCS description required by paragraph (b)(1) of this section must include the following for a tank barge cleaning facility:

(i) A physical description of the facility and facility plan showing mooring areas, locations where cleaning operations are conducted, control stations, and locations of safety equipment;

(ii) The sizes, types, and number of tank barges from which the facility can conduct cleaning operations simultaneously; and

(iii) The minimum number of persons required to be on duty during cleaning operations and the duties of each.

(c) The facility operator shall incorporate a copy of each amendment to the operations manual under § 154.320 in each copy of the manual with the related existing requirement, or add the amendment at the end of each manual if not related to an existing requirement.

(d) The operations manual must be written in the order specified in paragraph (a) of this section, or contain a cross-referenced index page in that order.

(Approved by the Office of Management and Budget under control number 1625–0093)

[CGD 75–124, 45 FR 7171, Jan. 31, 1980, as amended by CGD 88–102, 55 FR 25428, June 21, 1990; CGD 86–034, 55 FR 36253, Sept. 4, 1990; CGD 92–027, 58 FR 39662, July 26, 1993; CGD 93–056, 61 FR 41459, Aug. 8, 1996; USCG–2006–25150, 71 FR 39209, July 12, 2006; USCG–1999–5150, 78 FR 42617, July 16, 2013]

§ 154.320 Operations manual: Amendment.

(a) Using the following procedures, the COTP may require the facility operator to amend the operations manual if the COTP finds that the operations manual does not meet the requirements in this part:

(1) The COTP will notify the facility operator in writing of any inadequacies in the Operations Manual. The facility operator may submit written information, views, and arguments regarding the inadequacies identified, and proposals for amending the Manual, within 45 days from the date of the COTP notice. After considering all relevant material presented, the COTP shall notify the facility operator of any amendment required or adopted, or the COTP shall rescind the notice. The amendment becomes effective 60 days after the facility operator receives the notice, unless the facility operator petitions the Commandant to review the COTP's notice, in which case its effective date is delayed pending a decision by the Commandant. Petitions to the Commandant must be submitted in writing via the COTP who issued the requirement to amend the Operations Manual.

(2) If the COTP finds that there is a condition requiring immediate action to prevent the discharge or risk of discharge of oil or hazardous material that makes the procedure in paragraph (a)(1) of this section impractical or contrary to the public interest, the COTP may issue an amendment effective on the date the facility operator receives notice of it. In such a case, the COTP shall include a brief statement of the reasons for the findings in the notice. The owner or operator may petition the Commandant to review the amendment, but the petition does not delay the amendment.

(b) The facility operator may propose amendments to the operations manual by:

(1) Submitting any proposed amendment and reasons for the amendment to the COTP not less than 30 days before the requested effective date of the proposed amendment; or

(2) If an immediate amendment is needed, requesting the COTP to approve the amendment immediately.

(c) The COTP shall respond to proposed amendments submitted under paragraph (b) of this section by:

(1) Approving or disapproving the proposed amendments;

(2) Advising the facility operator whether the request is approved, in writing, before the requested date of the amendments;

(3) Including any reasons in the written response if the request is disapproved; and

(4) If the request is made under paragraph (b)(2) of this section immediately approving or rejecting the request.

(d) Amendments to personnel and telephone number lists required by § 154.310(a)(7) of this part do not require examination by the COTP, but the COTP must be advised of such amendments as they occur.

[CGD 75–124, 45 FR 7171, Jan. 31, 1980, as amended by CGD 86–034, 55 FR 36253, Sept. 4, 1990; CGD 93–056, 61 FR 41459, Aug. 8, 1996]

§ 154.325 Operations manual: Procedures for examination.

(a) The operator of a facility shall submit two copies of the Operations

Manual to the Captain of the Port of the zone in which the facility is located.

(b) Not less than 60 days prior to any transfer operation, the operator of a new facility shall submit, with the letter of intent, two copies of the Operations Manual to the Captain of the Port of the zone in which the facility is located.

(c) After a facility is removed from caretaker status, not less than 30 days prior to any transfer operation the operator of that facility shall submit two copies of the Operations Manual to the COTP of the zone in which the facility is located unless the manual has been previously examined and no changes have been made since the examination.

(d) If the COTP finds that the Operations Manual meets the requirements of this part and part 156 of this chapter, the COTP will return one copy of the manual to the operator marked ''Examined by the Coast Guard''.

(e) If the COTP finds that the Operations Manual does not meet the requirements of this part and/or part 156 of this chapter, the COTP will return the manuals with an explanation of why it does not meet the requirements of this chapter.

(f) No person may use any Operations Manual for transfer operations as required by this chapter unless the Operations Manual has been examined by the COTP.

(g) The Operations Manual is voided if the facility operator—

(1) Amends the Operations Manual without following the procedures in § 154.320 of this part;

(2) Fails to amend the Operations Manual when required by the COTP; or

(3) Notifies the COTP in writing that the facility will be placed in caretaker status.

[CGD 93–056, 61 FR 41459, Aug. 8, 1996]

Subpart C—Equipment Requirements

§ 154.500 Hose assemblies.

Each hose assembly used for transferring oil or hazardous material must meet the following requirements:

(a) The minimum design burst pressure for each hose assembly must be at least four times the sum of the pressure of the relief valve setting (or four times the maximum pump pressure when no relief valve is installed) plus the static head pressure of the transfer system, at the point where the hose is installed.

(b) The maximum allowable working pressure (MAWP) for each hose assembly must be more than the sum of the pressure of the relief valve setting (or the maximum pump pressure when no relief valve is installed) plus the static head pressure of the transfer system, at the point where the hose is installed.

(c) Each nonmetallic hose must be usable for oil or hazardous material service.

(d) Each hose assembly must either have—

(1) Full threaded connections;

(2) Flanges that meet ANSI B16.5 or ANSI B16.24 (both incorporated by reference, see 33 CFR 154.106); or

(3) Quick-disconnect couplings that meet ASTM F1122 (incorporated by reference, see 33 CFR 154.106).

(e) Each hose must be marked with one of the following:

(1) The name of each product for which the hose may be used; or

(2) For oil products, the words ''OIL SERVICE''; or

(3) For hazardous materials, the words ''HAZMAT SERVICE—SEE LIST'' followed immediately by a letter, number or other symbol that corresponds to a list or chart contained in the facility's operations manual or the vessel's transfer procedure documents which identifies the products that may be transferred through a hose bearing that symbol.

(f) Each hose also must be marked with the following, except that the information required by paragraphs (f)(2) and (3) of this section need not be marked on the hose if it is recorded in the hose records of the vessel or facility, and the hose is marked to identify it with that information:

(1) Maximum allowable working pressure;

(2) Date of manufacture; and

(3) Date of the latest test required by 33 CFR 156.170.

(g) The hose burst pressure and the pressure used for the test required by

33 CFR 156.170 must not be marked on the hose and must be recorded elsewhere at the facility as described in paragraph (f) of this section.

(h) Each hose used to transfer fuel to a vessel that has a fill pipe for which containment cannot practically be provided must be equipped with an automatic back pressure shutoff nozzle.

[USCG–1999–5150, 78 FR 42617, July 16, 2013]

§ 154.510 Loading arms.

(a) Each mechanical loading arm used for transferring oil or hazardous material and placed into service after June 30, 1973, must meet the design, fabrication, material, inspection, and testing requirements in ANSI B31.3 (incorporated by reference; *see* § 154.106).

(b) The manufacturer's certification that the standard in paragraph (a) of this section has been met must be permanently marked on the loading arm or recorded elsewhere at the facility with the loading arm marked to identify it with that information.

(c) Each mechanical loading arm used for transferring oil or hazardous material must have a means of being drained or closed before being disconnected after transfer operations are completed.

[CGD 75–124, 45 FR 7172, Jan. 31, 1980, as amended by CGD 86–034, 55 FR 36253, Sept. 4, 1990; USCG–2001–8661, 74 FR 45022, Aug. 31, 2009]

§ 154.520 Closure devices.

(a) Except as provided in paragraph (b) of this section, each facility to which this part applies must have enough butterfly valves, wafer-type resilient seated valves, blank flanges, or other means acceptable to the COTP to blank off the ends of each hose or loading arm that is not connected for the transfer of oil or hazardous material. Such hoses and/or loading arms must be blanked off during the transfer of oil or hazardous material. A suitable material in the joints and couplings shall be installed on each end of the hose assembly or loading arm not being used for transfer to ensure a leak-free seal.

(b) A new, unused hose, and a hose that has been cleaned and is gas free, is exempt from the requirements of paragraph (a) of this section.

[CGD 93–056, 61 FR 41459, Aug. 8, 1996]

§ 154.525 Monitoring devices.

The COTP may require the facility to install monitoring devices if the installation of monitoring devices at the facility would significantly limit the size of a discharge of oil or hazardous material and either:

(a) The environmental sensitivity of the area requires added protection;

(b) The products transferred at the facility pose a significant threat to the environment; or

(c) The size or complexity of the transfer operation poses a significant potential for a discharge of oil or hazardous material.

[CGD 75–124, 45 FR 7172, Jan. 31, 1980, as amended by CGD 86–034, 55 FR 36253, Sept. 4, 1990]

§ 154.530 Small discharge containment.

(a) Except as provided in paragraphs (c), (d), and (e) of this section, each facility to which this part applies must have fixed catchments, curbing, or other fixed means to contain oil or hazardous material discharged in at least—

(1) Each hose handling and loading arm area (that area on the facility that is within the area traversed by the free end of the hose or loading arm when moved from its normal stowed or idle position into a position for connection);

(2) Each hose connection manifold area; and

(3) Under each hose connection that will be coupled or uncoupled as part of the transfer operation during coupling, uncoupling, and transfer.

(b) The discharge containment means required by paragraph (a) of this section must have a capacity of at least:

(1) Two barrels if it serves one or more hoses of 6-inch inside diameter or smaller, or loading arms of 6-inch nominal pipe size diameter or smaller;

(2) Three barrels if it serves one or more hoses with an inside diameter of more than 6-inches, but less than 12 inches, or loading arms with a nominal pipe size diameter of more than 6 inches, but less than 12 inches; or

(3) Four barrels if it serves one or more hoses of 12-inch inside diameter or larger, or loading arms of 12-inch nominal pipe size diameter or larger.

(c) The facility may use portable means of not less than ½ barrel capacity each to meet the requirements of paragraph (a) of this section for part or all of the facility if the COTP finds that fixed means to contain oil or hazardous material discharges are not feasible.

(d) A mobile facility may have portable means of not less than five gallons capacity to meet the requirements of paragraph (a) of this section.

(e) Fixed or portable containment may be used to meet the requirements of paragraph (a)(3) of this section.

[CGD 75–124, 45 FR 7172, Jan. 31, 1980, as amended by CGD 86–034, 55 FR 36253, Sept. 4, 1990; CGD 93–056, 61 FR 41460, Aug. 8, 1996]

§ 154.540 Discharge removal.

Each facility to which this part applies must have a means to safely remove discharged oil or hazardous material, within one hour of completion of the transfer, from the containment required by § 154.530 of this part without discharging the oil or hazardous material into the water.

[CGD 93–056, 61 FR 41460, Aug. 8, 1996]

§ 154.545 Discharge containment equipment.

(a) Each facility must have ready access to enough containment material and equipment to contain any oil or hazardous material discharged on the water from operations at that facility.

(b) For the purpose of this section, ''access'' may be by direct ownership, joint ownership, cooperative venture, or contractual agreement.

(c) Each facility must establish time limits, subject to approval by the COTP, for deployment of the containment material and equipment required by paragraph (a) of this section considering:

(1) Oil or hazardous material handling rates;

(2) Oil or hazardous material capacity susceptible to being spilled;

(3) Frequency of facility operations;

(4) Tidal and current conditions;

(5) Facility age and configuration; and

(6) Past record of discharges.

(d) The COTP may require a facility to surround each vessel conducting an oil or hazardous material transfer operation with containment material before commencing a transfer operation if—

(1) The environmental sensitivity of the area requires the added protection;

(2) The products transferred at the facility pose a significant threat to the environment;

(3) The past record of discharges at the facility is poor; or

(4) The size or complexity of the transfer operation poses a significant potential for a discharge of oil or hazardous material; and

(5) The use of vessel containment provides the only practical means to reduce the extent of environmental damage.

(e) Equipment and procedures maintained to satisfy the provisions of this chapter may be utilized in the planning requirements of subpart F and subpart H of this part.

[CGD 75–124, 45 FR 7172, Jan. 31, 1980, as amended by CGD 86–034, 55 FR 36253, Sept. 4, 1990; CGD 93–056, 61 FR 41460, Aug. 8, 1996; USCG–1999–5149, 65 FR 40825, June 30, 2000]

§ 154.550 Emergency shutdown.

(a) The facility must have an emergency means to enable the person in charge of the transfer on board the vessel, at that person's usual operating station, to stop the flow of oil or hazardous material from the facility to the vessel. The means must be—

(1) An electrical, pneumatic, or mechanical linkage to the facility; or

(2) An electronic voice communications system continuously operated by a person on the facility who can stop the flow of oil or hazardous material immediately.

(b) The point in the transfer system at which the emergency means stops the flow of oil or hazardous material on the facility must be located near the dock manifold connection to minimize the loss of oil or hazardous material in the event of the rupture or failure of the hose, loading arm, or manifold valve.

(c) For oil transfers, the means used to stop the flow under paragraph (a) of

this section must stop that flow within—

(1) 60 seconds on any facility or portion of a facility that first transferred oil on or before November 1, 1980; and

(2) 30 seconds on any facility that first transfers oil after November 1, 1980.

(d) For hazardous material transfers, the means used to stop the flow under paragraph (a) of this section must stop that flow within—

(1) 60 seconds on any facility or portion of a facility that first transferred hazardous material before October 4, 1990; and

(2) 30 seconds on any facility that first transfers hazardous material on or after October 4, 1990.

[CGD 86–034, 55 FR 36253, Sept. 4, 1990]

§ 154.560 Communications.

(a) Each facility must have a means that enables continuous two-way voice communication between the person in charge of the vessel transfer operation and the person in charge of the facility transfer operation.

(b) Each facility must have a means, which may be the communications system itself, that enables a person on board a vessel or on the facility to effectively indicate the desire to use the means of communication required by paragraph (a) of this section.

(c) The means required by paragraph (a) of this section must be usable and effective in all phases of the transfer operation and all conditions of weather at the facility.

(d) A facility may use the system in § 154.550(a)(2) to meet the requirement of paragraph (a) of this section.

(e) Portable radio devices used to comply with paragraph (a) of this section during the transfer of flammable or combustible liquids must be marked as intrinsically safe by the manufacturer of the device and certified as intrinsically safe by a national testing laboratory or other certification organization approved by the Commandant as defined in 46 CFR 111.105–11. As an alternative to the marking requirement, facility operators may maintain documentation at the facility certifying that the portable radio devices in use at the facility are in compliance with this section.

[CGD 75–124, 45 FR 7172, Jan. 31, 1980; 45 FR 43705, June 30, 1980, as amended by CGD 93–056, 61 FR 41460, Aug. 8, 1996]

§ 154.570 Lighting.

(a) Except as provided in paragraph (c) of this section, for operations between sunset and sunrise, a facility must have fixed lighting that adequately illuminates:

(1) Each transfer connection point on the facility;

(2) Each transfer connection point in use on any barge moored at the facility to or from which oil or hazardous material is being transferred;

(3) Each transfer operations work area on the facility; and

(4) Each transfer operation work area on any barge moored at the facility to or from which oil or hazardous material is being transferred.

(b) Where the illumination is apparently inadequate, the COTP may require verification by instrument of the levels of illumination. On a horizontal plane 3 feet above the barge deck or walking surface, illumination must measure at least:

(1) 5.0 foot candles at transfer connection points; and

(2) 1.0 foot candle in transfer operations work areas.

(c) For small or remote facilities, the COTP may authorize operations with an adequate level of illumination provided by the vessel or by portable means.

(d) Lighting must be located or shielded so as not to mislead or otherwise interfere with navigation on the adjacent waterways.

[CGD 75–124, 45 FR 7172, Jan. 31, 1980, as amended by CGD 86–034, 55 FR 36253, Sept. 4, 1990]

Subpart D—Facility Operations

§ 154.700 General.

No person may operate a facility unless the equipment, personnel, and operating procedures of that facility meet the requirements of this part.

[CGD 75–124, 45 FR 7173, Jan. 31, 1980]

§ 154.710 Persons in charge: Designation and qualification.

No person may serve, and the facility operator may not use the services of a person, as person in charge of facility transfer operations unless:

(a) The facility operator has designated that person as a person in charge;

(b) The person has had at least 48 hours of experience in transfer operations at a facility in operations to which this part applies. The person also has enough experience at the facility for which qualification is desired to enable the facility operator to determine that the person's experience is adequate;

(c) The person has completed a training and qualification program established by the facility operator and described in the Operations Manual in accordance with § 154.310(a)(21), that provides the person with the knowledge and training necessary to properly operate the transfer equipment at the facility, perform the duties described in paragraph (d) of this section, follow the procedures required by this part, and fulfill the duties required of a person in charge during an emergency, except that the COTP may approve alternative experience and training requirements for new facilities; and

(d) The facility operator must certify that each person in charge has the knowledge of, and skills necessary to—

(1) The hazards of each product to be transferred;

(2) The rules in this part and in part 156 of this chapter;

(3) The facility operating procedures as described in the operations manual;

(4) Vessel transfer systems, in general;

(5) Vessel transfer control systems, in general;

(6) Each facility transfer control system to be used;

(7) Follow local discharge reporting procedures; and

(8) Carry out the facility's response plan for discharge reporting and containment.

(e) Training conducted to comply with the hazard communication programs required by the Occupational Safety and Health Administration (OSHA) of the Department of Labor (DOL) (29 CFR 1910.1200) or the Environmental Protection Agency (EPA) (40 CFR 311.1), or to meet the requirements of subpart F of this part may be used to satisfy the requirements in paragraphs (c) and (d) of this section, as long as the training addresses the requirements in paragraphs (c) and (d) of this section.

(Sec. 311(j)(1)(C) of the Federal Water Pollution Control Act (86 Stat. 816, 868); 33 U.S.C. 1161(j)(1)(C); EO 11548, 3 CFR, 1966–1970 Comp., p. 949; 49 CFR 1.46(m))

[CGD 71–160R, 37 FR 28253, Dec. 21, 1972, as amended by CGD 86–034, 55 FR 36253, Sept. 4, 1990; CGD 93–056, 61 FR 41460, Aug. 8, 1996]

§ 154.730 Persons in charge: Evidence of designation.

Each person in charge shall carry evidence of his designation as a person in charge when he is engaged in transfer operations unless such evidence is immediately available at the facility.

(Sec. 311(j)(1)(C) of the Federal Water Pollution Control Act (86 Stat. 816, 868); 33 U.S.C. 1161(j)(1)(C); EO 11548, 3 CFR, 1966–1970 Comp., p. 949; 49 CFR 1.46(m))

[CGD 71–160R, 37 FR 28253, Dec. 21, 1972]

§ 154.735 Safety requirements.

Each operator of a facility to which this part applies shall ensure that the following safety requirements are met at the facility:

(a) Access to the facility by firefighting personnel, fire trucks, or other emergency personnel is not impeded.

(b) Materials which are classified as hazardous under 49 CFR parts 170 through 179 are kept only in the quantities needed for the operation or maintenance of the facility and are stored in storage compartments.

(c) Gasoline or other fuel is not stored on a pier, wharf, or other similar structure.

(d) A sufficient number of fire extinguishers approved by an independent laboratory listed in 46 CFR 162.028–5 for fighting small, localized fires are in place throughout the facility and maintained in a ready condition.

(e) The location of each hydrant, standpipe, hose station, fire extinguisher, and fire alarm box is conspicuously marked and readily accessible.

(f) Each piece of protective equipment is ready to operate.

(g) Signs indicating that smoking is prohibited are posted in areas where smoking is not permitted.

(h) Trucks and other motor vehicles are operated or parked only in designated locations.

(i) All rubbish is kept in receptacles.

(j) All equipment with internal combustion engines used on the facility—

(1) Does not constitute a fire hazard; and

(2) Has a fire extinguisher attached that is approved by an independent laboratory listed in 46 CFR 162.028–5, unless such a fire extinguisher is readily accessible nearby on the facility.

(k) Spark arresters are provided on chimneys or appliances which—

(1) Use solid fuel; or

(2) Are located where sparks constitute a hazard to nearby combustible material.

(l) All welding or hot work conducted on or at the facility is the responsibility of the facility operator. The COTP may require that the operator of the facility notify the COTP before any welding or hot work operations are conducted. Any welding or hot work operations conducted on or at the facility must be conducted in accordance with NFPA 51B (incorporated by reference; *see* §154.106). The facility operator shall ensure that the following additional conditions or criteria are met:

(1) Welding or hot work is prohibited during gas freeing operations, within 30.5 meters (100 feet) of bulk cargo operations involving flammable or combustible materials, within 30.5 meters (100 feet) of fueling operations, or within 30.5 meters (100 feet) of explosives or 15.25 meters (50 feet) of other hazardous materials.

(2) If the welding or hot work is on the boundary of a compartment (*i.e.*, bulkhead, wall or deck) an additional fire watch shall be stationed in the adjoining compartment.

(3) Personnel on fire watch shall have no other duties except to watch for the presence of fire and to prevent the development of hazardous conditions.

(4) Flammable vapors, liquids or solids must first be completely removed from any container, pipe or transfer line subject to welding or hot work.

(5) Tanks used for storage of flammable or combustible substances must be tested and certified gas free prior to starting hot work.

(6) Proper safety precautions in relation to purging, inserting, or venting shall be followed for hot work on containers;

(7) All local laws and ordinances shall be observed;

(8) In case of fire or other hazard, all cutting, welding or other hot work equipment shall be completely secured.

(m) Heating equipment has sufficient clearance to prevent unsafe heating of nearby combustible material.

(n) Automotive equipment having an internal combustion engine is not refueled on a pier, wharf, or other similar structure.

(o) There are no open fires or open flame lamps.

(p) Electric wiring and equipment is maintained in a safe condition so as to prevent fires.

(q) Electrical wiring and electrical equipment installed after October 4, 1990, meet NFPA 70 (1987) (incorporated by reference, see 33 CFR 154.106).

(r) Electrical equipment, fittings, and devices installed after October 4, 1990, show approval for that use by—

(1) Underwriters Laboratories;

(2) Factory Mutual Research Corporation; or

(3) Canadian Standards Association.

(s) Tank-cleaning or gas-freeing operations conducted by the facility on vessels carrying oil residues or mixtures must be conducted in accordance with sections 11.3 and 11.4 of OCIMF ISGOTT (incorporated by reference, see 33 CFR 154.106), except that—

(1) Prohibitions in ISGOTT against the use of recirculated wash water do not apply if the wash water is first processed to remove product residues;

(2) The provisions in ISGOTT section 11.3.6.10 that removal of sludge, scale, and sediment do not apply if personnel use breathing apparatuses which protect them from the tank atmosphere; and

(3) Upon the request of the facility owner or operator in accordance with 33 CFR 154.107, the COTP may approve the use of alternate standards to ISGOTT if the COTP determines that the alternative standards provide an equal level of protection to the ISGOTT standards.

(t) Guards are stationed, or equivalent controls acceptable to the COTP are used to detect fires, report emergency conditions, and ensure that access to the marine transfer area is limited to—

(1) Personnel who work at the facility including persons assigned for transfer operations, vessel personnel, and delivery and service personnel in the course of their business;

(2) Coast Guard personnel;

(3) Other Federal, State, or local governmental officials; and

(4) Other persons authorized by the operator.

(u) Smoking shall be prohibited at the facility except that facility owners or operators may authorize smoking in designated areas if—

(1) Smoking areas are designated in accordance with local ordinances and regulations;

(2) Signs are conspicuously posted marking such authorized smoking areas; and

(3) ''No Smoking'' signs are conspicuously posted elsewhere on the facility.

(v) Warning signs shall be displayed on the facility at each shoreside entry to the dock or berth, without obstruction, at all times for fixed facilities and for mobile facilities during coupling, transfer operation, and uncoupling. The warning signs shall conform to 46 CFR 151.45–2(e)(1) or 46 CFR 153.955.

[CGD 86–034, 55 FR 36253, Sept. 4, 1990, as amended by CGD 93–056, 61 FR 41460, Aug. 8, 1996; USCG–2001–8661, 74 FR 45022, Aug. 31, 2009; USCG–1999–5150, 78 FR 42618, July 16, 2013]

§ 154.740 Records.

Each facility operator shall maintain at the facility and make available for examination by the COTP:

(a) A copy of the letter of intent for the facility;

(b) The name of each person designated as a person in charge of transfer operations at the facility and certification that each person in charge has completed the training requirements of § 154.710 of this part;

(c) The date and result of the most recent test or examination of each item tested or examined under § 156.170 of this chapter;

(d) The hose information required by § 154.500 (e) and (g) except that marked on the hose;

(e) The record of all examinations of the facility by the COTP within the last 3 years;

(f) The Declaration of Inspection required by § 156.150(f) of this chapter;

(g) A record of all repairs made within the last three years involving any component of the facility's vapor control system required by subpart P of this part;

(h) A record of all automatic shut downs of the facility's vapor control system within the last 3 years; and

(i) Plans, calculations, and specifications of the facility's vapor control system certified under 33 CFR 154.2020 through 154.2025.

(j) If they are not marked as such, documentation that the portable radio devices in use at the facility under § 154.560 of this part are intrinsically safe.

(Approved by the Office of Management and Budget under control number 1625–0060)

[CGD 75–124, 45 FR 7173, Jan. 31, 1980, as amended by CGD 88–102, 55 FR 25429, June 21, 1990; CGD 86–034, 55 FR 36254, Sept. 4, 1990; CGD 93–056, 61 FR 41461, Aug. 8, 1996; USCG–2006–25150, 71 FR 39209, July 12, 2006; USCG–1999–5150, 78 FR 42618, July 16, 2013]

§ 154.750 Compliance with operations manual.

The facility operator shall require facility personnel to use the procedures in the operations manual prescribed by § 154.300 for operations under this part.

[CGD 75–124, 45 FR 7174, Jan. 31, 1980]

Subpart E [Reserved]

Subpart F—Response Plans for Oil Facilities

SOURCE: CGD 91–036, 61 FR 7917, Feb. 29, 1996, unless otherwise noted.

§ 154.1010 Purpose.

This subpart establishes oil spill response plan requirements for all marine transportation-related (MTR) facilities (hereafter also referred to as facilities) that could reasonably be expected to cause substantial harm or significant and substantial harm to the

environment by discharing oil into or on the navigable waters, adjoining shorelines, or exclusive economic zone. The development of a response plan prepares the facility owner or operator to respond to an oil spill. These requirements specify criteria to be used during the planning process to determine the appropriate response resources. The specific criteria for response resources and their arrival times are not performance standards. The criteria are based on a set of assumptions that may not exist during an actual oil spill incident.

§ 154.1015 Applicability.

(a) This subpart applies to all MTR facilities that because of their location could reasonably be expected to cause at least substantial harm to the environment by discharging oil into or on the navigable waters, adjoining shorelines, or exclusive economic zone.

(b) The following MTR facilities that handle, store, or transport oil, in bulk, could reasonably be expected to cause substantial harm to the environment by discharging oil into or on the navigable waters or adjoining shorelines and are classified as substantial harm MTR facilities:

(1) Fixed MTR onshore facilities capable of transferring oil to or from a vessel with a capacity of 250 barrels or more and deepwater ports;

(2) Mobile MTR facilities used or intended to be used to transfer oil to or from a vessel with a capacity of 250 barrels or more; and

(3) Those MTR facilities specifically designated as substantial harm facilities by the COTP under § 154.1016.

(c) The following MTR facilities that handle, store, or transport oil in bulk could not only reasonably be expected to cause substantial harm, but also significant and substantial harm, to the environment by discharging oil into or on the navigable waters, adjoining shorelines, or exclusive economic zone and are classified as significant and substantial harm MTR facilities:

(1) Deepwater ports, and fixed MTR onshore facilities capable of transferring oil to or from a vessel with a capacity of 250 barrels or more except for facilities that are part of a non-transportation-related fixed onshore facility with a storage capacity of less than 42,000 gallons; and

(2) Those MTR facilities specifically designated as significant and substantial harm facilities by the COTP under § 154.1016.

(d) An MTR facility owner or operator who believes the facility is improperly classified may request review and reclassification in accordance with § 154.1075.

§ 154.1016 Facility classification by COTP.

(a) The COTP may upgrade the classification of:

(1) An MTR facility not specified in § 154.1015 (b) or (c) to a facility that could reasonably be expected to cause substantial harm to the environment; or

(2) An MTR facility specified in § 154.1015(b) to a facility that could reasonably be expected to cause significant and substantial harm to the environment.

(b) The COTP may downgrade, the classification of:

(1) An MTR facility specified in § 154.1015(c) to a facility that could reasonably be expected to cause substantial harm to the environment; or

(2) An MTR facility specified in § 154.1015(b) to a facility that could not reasonably be expected to cause substantial, or significant and substantial harm to the environment.

(3) The COTP will consider downgrading an MTR facility's classification only upon receiving a written request for a downgrade of classification from the facility's owner or operator.

(c) When changing a facility classification the COTP may, as appropriate, consider all relevant factors including, but not limited to: Type and quantity of oils handled in bulk; facility spill history; age of facility; proximity to public and commercial water supply intakes; proximity to navigable waters based on the definition of navigable waters in 33 CFR 2.36; and proximity to fish and wildlife and sensitive environments.

[CGD 91–036, 61 FR 7917, Feb. 29, 1996, as amended by USCG–2008–0179, 73 FR 35014, June 19, 2008]

§ 154.1017 Response plan submission requirements.

(a) The owner or operator of an MTR facility identified only in § 154.1015(b), or designated by the COTP as a substantial harm facility, shall prepare and submit to the cognizant COTP a response plan that meets the requirements of § 154.1030, § 154.1040, § 154.1045, or § 154.1047, as appropriate. This applies to:

(1) A mobile MTR facility used or intended to be used to transfer oil to or from a vessel with a capacity of 250 barrels or more; and

(2) A fixed MTR facility specifically designated as a substantial harm facility by the COTP under § 154.1016.

(b) The owner or operator of an MTR facility identified in § 154.1015(c) or designated by the COTP as a significant and substantial harm facility shall prepare and submit for review and approval of the cognizant COTP a response plan that meets the requirements of § 154.1030, § 154.1035, § 154.1045, or § 154.1047, as appropriate. This applies to:

(1) A fixed MTR facility capable of transferring oil, in bulk, to or from a vessel with a capacity of 250 barrels or more; and

(2) An MTR facility specifically designated as a significant and substantial harm facility by the COTP under § 154.1016.

(c) In addition to the requirements in paragraphs (a) and (b) of this section, the response plan for a mobile MTR facility must meet the requirements of § 154.1041 subpart F.

§ 154.1020 Definitions.

Except as otherwise defined in this section, the definition in 33 CFR 154.105 apply to this subpart and subparts H and I.

Adverse weather means the weather conditions that will be considered when identifying response systems and equipment in a response plan for the applicable operating environment. Factors to consider include, but are not limited to, significant wave height as specified in § 154.1045, § 154.1047, § 154.1225, or § 154.1325, as appropriate; ice conditions, temperatures, weather-related visibility, and currents within the COTP zone in which the systems or equipment are intended to function.

Animal fat means a non-petroleum oil, fat, or grease derived from animals, and not specifically identified elsewhere in this part.

Average most probable discharge means a discharge of the lesser of 50 barrels or 1 percent of the volume of the worst case discharge.

Captain of the Port (COTP) Zone means a zone specified in 33 CFR part 3 and, where applicable, the seaward extension of that zone to the outer boundary of the exclusive economic zone (EEZ).

Complex means a facility possessing a combination of marine-transportation related and non-transportation-related components that is subject to the jurisdiction of more than one Federal agency under section 311(j) of the Clean Water Act.

Dispersant-application platform means the vessel or aircraft outfitted with the dispersant-application equipment acting as the delivery system for the dispersant onto the oil spill.

Dispersant Mission Planner 2 or (DMP2) means an Internet-downloadable application that estimates EDAC for different dispersant response systems. The NSFCC will use DPMP2 for evaluating OSRO dispersant classification levels.

Effective Daily Application Capacity or *EDAC* means the estimated amount of dispersant that can be applied to a discharge by an application system given the availability of supporting dispersant stockpiles, when operated in accordance with approved standards and within acceptable environmental conditions.

Exclusive economic zone (EEZ) means the zone contiguous to the territorial sea of the United States extending to a distance up to 200 nautical miles from the baseline from which the breadth of the territorial sea is measured.

Facility that could reasonably be expected to cause significant and substantial harm means any MTR facility (including piping and any structures that are used for the transfer of oil between a vessel and a facility) classified as a ''significant and substantial harm'' facility under § 154.1015(c) and § 154.1216.

Facility that could reasonably be expected to cause substantial harm means any MTR facility classified as a ''substantial harm'' facility under § 154.1015(b) and § 154.1216.

Fish and Wildlife and Sensitive Environment means areas that may be identified by either their legal designation or by Area Committees in the applicable Area Contingency Plan (ACP) (for planning) or by members of the Federal On-Scene Coordinator's spill response structure (during responses). These areas may include: Wetlands, national and state parks, critical habitats for endangered or threatened species, wilderness and natural resource areas, marine sanctuaries and estuarine reserves, conservation areas, preserves, wildlife areas, wildlife refuges, wild and scenic rivers, areas of economic importance, recreational areas, national forests, Federal and state lands that are research areas, heritage program areas, land trust areas, and historical and archaeological sites and parks. These areas may also include unique habitats such as: aquaculture sites and agricultural surface water intakes, bird nesting areas, critical biological resource areas, designated migratory routes, and designated seasonal habitats.

Great Lakes means Lakes Superior, Michigan, Huron, Erie, and Ontario, their connecting and tributary waters, the Saint Lawrence River as far as Saint Regis, and adjacent port areas.

Gulf Coast means, for the purposes of dispersant-application requirements, the region encompassing the following Captain of the Port Zones:

(1) Corpus Christi, TX.

(2) Houston/Galveston, TX.

(3) Port Arthur, TX.

(4) Morgan City, LA.

(5) New Orleans, LA.

(6) Mobile, AL.

(7) St. Petersburg, FL.

Higher volume port area means the following ports:

(1) Boston, MA.

(2) New York, NY.

(3) Delaware Bay and River to Philadelphia, PA.

(4) St. Croix, VI.

(5) Pascagoula, MS.

(6) Mississippi River from Southwest Pass, LA. to Baton Rouge, LA.

(7) Louisiana Offshore Oil Port (LOOP), LA.

(8) Lake Charles, LA.

(9) Sabine-Neches River, TX.

(10) Galveston Bay and Houston Ship Channel, TX.

(11) Corpus Christi, TX.

(12) Los Angeles/Long Beach harbor, CA.

(13) San Francisco Bay, San Pablo Bay, Carquinez Strait, and Suisun Bay to Antioch, CA.

(14) Straits of Juan De Fuca from Port Angeles, WA, to and including Puget Sound, WA.

(15) Prince William Sound, AK.

Inland area means the area shoreward of the boundary lines defined in 46 CFR part 7, except in the Gulf of Mexico. In the Gulf of Mexico, it means the area shoreward of the lines of demarcation (COLREG lines) defined in §§ 80.740 through 80.850 of this chapter. The inland area does not include the Great Lakes.

Marine transportation-related facility (MTR facility) means any onshore facility or segment of a complex regulated under section 311(j) of the Federal Water Pollution Control Act (FWPCA) by two or more Federal agencies, including piping and any structure used or intended to be used to transfer oil to or from a vessel, subject to regulation under this part and any deepwater port subject to regulation under part 150 of this chapter. For a facility or segment of a complex regulated by two or more Federal agencies under section 311(j) of the FWPCA, the MTR portion of the complex extends from the facility oil transfer system's connection with the vessel to the first valve inside the secondary containment surrounding tanks in the non-transportation-related portion of the facility or, in the absence of secondary containment, to the valve or manifold adjacent to the tanks comprising the non-transportation-related portion of the facility, unless another location has otherwise been agreed to by the COTP and the appropriate Federal official.

Maximum extent practicable means the planned capability to respond to a worst case discharge in adverse weather, as contained in a response plan that meets the criteria in this subpart or in

a specific plan approved by the cognizant COTP.

Maximum most probable discharge means a discharge of the lesser of 1,200 barrels or 10 percent of the volume of a worst case discharge.

Nearshore area means the area extending seaward 12 miles from the boundary lines defined in 46 CFR part 7, except in the Gulf of Mexico. In the Gulf of Mexico, it means the area extending seaward 12 miles from the line of demarcation (COLREG lines) defined in §§ 80.740–80.850 of this chapter.

Non-persistent or Group I oil means a petroleum-based oil that, at the time of shipment, consists of hydrocarbon fractions—

(1) At least 50 percent of which by volume, distill at a temperature of 340 degrees C (645 degrees F); and

(2) At least 95 percent of which by volume, distill at a temperature of 370 degrees C (700 degrees F).

Ocean means the offshore area and nearshore area as defined in this subpart.

Offshore area means the area beyond 12 nautical miles measured from the boundary lines defined in 46 CFR part 7 extending seaward to 50 nautical miles, except in the Gulf of Mexico. In the Gulf of Mexico, it is the area beyond 12 nautical miles of the line of demarcation (COLREG lines) defined in §§ 80.740–80.850 of this chapter extending seaward to 50 nautical miles.

Oil means oil of any kind or in any form, including, but not limited to, petroleum, fuel oil, sludge, oil refuse, oil mixed with wastes other than dredge spoil.

Oil spill removal organization (OSRO) means an entity that provides response resources.

On-Scene Coordinator (OSC) means the definition in the National Oil and Hazardous Substances Pollution Contingency Plan (40 CFR part 300).

Operating area means Rivers and Canals, Inland, Nearshore, Great Lakes, or Offshore geographic location(s) in which a facility is handling, storing, or transporting oil.

Operating environment means Rivers and Canals, Inland, Great Lakes, or Ocean. These terms are used to define the conditions in which response equipment is designed to function.

Operating in compliance with the plan means operating in compliance with the provisions of this subpart including, ensuring the availability of the response resources by contract or other approved means, and conducting the necessary training and drills.

Operational effectiveness monitoring means monitoring concerned primarily with determining whether the dispersant was properly applied and how the dispersant is affecting the oil.

Other non-petroleum oil means a non-petroleum oil of any kind that is not generally an animal fat or vegetable oil.

Persistent oil means a petroleum-based oil that does not meet the distillation criteria for a non-persistent oil. For the purposes of this subpart, persistent oils are further classified based on specific gravity as follows:

(1) Group II—specific gravity of less than .85.

(2) Group III—specific gravity equal to or greater than .85 and less than .95.

(3) Group IV—specific gravity equal to or greater than .95 and less than or equal to 1.0.

(4) Group V—specific gravity greater than 1.0.

Pre-authorization for dispersant use means an agreement, adopted by a regional response team in coordination with area committees, which authorizes the use of dispersants at the discretion of the Federal On-Scene Coordinator without the further approval of other Federal or State authorities. These pre-authorization areas are generally limited to particular geographic areas within each region.

Primary dispersant staging site means a site designated within a Captain of the Port zone that has been identified as a forward staging area for dispersant application platforms and the loading of dispersant stockpiles. Primary staging sites are typically the planned locations where platforms load or reload dispersants before departing for application at the site of the discharge and may not be the locations where dispersant stockpiles are stored or application platforms are home-based.

Qualified individual and alternate qualified individual means a person located in the United States who meets the requirements of § 154.1026.

Response activities means the containment and removal of oil from the land, water, and shorelines, the temporary storage and disposal of recovered oil, or the taking of other actions as necessary to minimize or mitigate damage to the public health or welfare or the environment.

Response resources means the personnel, equipment, supplies, and other capability necessary to perform the response activities identified in a response plan.

Rivers and canals means a body of water confined within the inland area, including the Intracoastal Waterways and other waterways artificially created for navigation, that has a project depth of 12 feet or less.

Specific gravity means the ratio of the mass of a given volume of liquid at 15 °C (60 °F) to the mass of an equal volume of pure water at the same temperature.

Spill management team means the personnel identified to staff the organizational structure identified in a response plan to manage response plan implementation.

Substantial threat of a discharge means any incident or condition involving a facility that may create a risk of discharge of oil. Such incidents include, but are not limited to storage tank or piping failures, above ground or underground leaks, fires, explosions, flooding, spills contained within the facility, or other similar occurrences.

Tier means the combination of required response resources and the times within which the resources must arrive on scene.

[NOTE: Tiers are applied in three categories:

(1) Higher Volume Port Areas,

(2) Great Lakes, and

(3) All other operating environments, including rivers and canals, inland, nearshore, and offshore areas.

Appendix C, Table 4 of this part, provides specific guidance on calculating response resources. Sections 154.1045(f) and 154.1135, set forth the required times within which the response resources must arrive on-scene.]

Vegetable oil means a non-petroleum oil or fat derived from plant seeds, nuts, kernels or fruits, and not specifically identified elsewhere in this part.

Worst case discharge means in the case of an onshore facility and deepwater port, the largest foreseeable discharge in adverse weather conditions meeting the requirements of § 154.1029.

[CGD 91–036, 61 FR 7917, Feb. 29, 1996, as amended by USCG–1999–5149, 65 FR 40825, June 30, 2000; USCG–2001–8661, 74 FR 45023, Aug. 31, 2009]

§ 154.1025 Operating restrictions and interim operating authorization.

(a) The owner or operator of an MTR facility who submitted a response plan prior to May 29, 1996, may elect to comply with any of the provisions of this final rule by revising the appropriate section of the previously submitted plan in accordance with § 154.1065. An owner or operator of an MTR facility who elects to comply with all sections of this final rule must resubmit the plan in accordance with § 154.1060 of this part.

(b) No facility subject to this subpart may handle, store, or transport oil unless it is operating in full compliance with a submitted response plan. No facility categorized under § 154.1015(c) as a significant and substantial harm facility may handle, store, or transport oil unless the submitted response plan has been approved by the COTP. The owner or operator of each new facility to which this subpart applies must submit a response plan meeting the requirements listed in § 154.1017 not less than 60 days prior to handling, storing, or transporting oil. Where applicable, the response plan shall be submitted along with the letter of intent required under § 154.110.

(c) Notwithstanding the requirements of paragraph (b) of this section, a facility categorized under § 154.1015(c) as a significant and substantial harm facility may continue to handle, store, or transport oil for 2 years after the date of submission of a response plan, pending approval of that plan. To continue to handle, store, or transport oil without a plan approved by the COTP, the facility owner or operator shall certify in writing to the COTP that the owner or operator has ensured, by contract or other approved means as described in § 154.1028(a), the availability of the necessary private personnel and equipment to respond, to the maximum extend practicable to a worst case discharge or substantial threat of such a discharge from the facility. Provided

that the COTP is satisfied with the certification of response resources provided by the owner or operator of the facility, the COTP will provide written authorization for the facility to handle, store, or transport oil while the submitted response plan is being reviewed. Pending approval of the submitted response plan, deficiencies noted by the COTP must be corrected in accordance with § 154.1070.

(d) A facility may not continue to handle, store, or transport oil if—

(1) The COTP determines that the response resources identified in the facility certification statement or reference response plan do not substantially meet the requirements of this subpart;

(2) The contracts or agreements cited in the facility's certification statement or referenced response plans are no longer valid;

(3) The facility is not operating in compliance with the submitted plan;

(4) The response plan has not been resubmitted or approved within the last 5 years; or

(5) The period of the authorization under paragraph (c) of this section has expired.

§ 154.1026 Qualified individual and alternate qualified individual.

(a) The response plan must identify a qualified individual and at least one alternate who meet the requirements of this section. The qualified individual or alternate must be available on a 24-hour basis and be able to arrive at the facility in a reasonable time.

(b) The qualified individual and alternate must:

(1) Be located in the United States;

(2) Speak fluent English;

(3) Be familiar with the implementation of the facility response plan; and

(4) Be trained in the responsibilities of the qualified individual under the response plan.

(c) The owner or operator shall provide each qualified individual and alternate qualified individual identified in the plan with a document designating them as a qualified individual and specifying their full authority to:

(1) Activate and engage in contracting with oil spill removal organization(s);

(2) Act as a liaison with the predesignated Federal On-Scene Coordinator (OSC); and

(3) Obligate funds required to carry out response activities.

(d) The owner or operator of a facility may designate an organization to fulfill the role of the qualified individual and the alternate qualified individual. The organization must then identify a qualified individual and at least one alternate qualified individual who meet the requirements of this section. The facility owner or operator is required to list in the response plan the organization, the person identified as the qualified individual, and the person or person(s) identified as the alternate qualified individual(s).

(e) The qualified individual is not responsible for—

(1) The adequacy of response plans prepared by the owner or operator; or

(2) Contracting or obligating funds for response resources beyond the authority contained in their designation from the owner or operator of the facility.

(f) The liability of a qualified individual is considered to be in accordance with the provisions of 33 USC 1321(c)(4).

§ 154.1028 Methods of ensuring the availability of response resources by contract or other approved means.

(a) When required in this subpart, the availability of response resources must be ensured by the following methods:

(1) A written contractual agreement with an oil spill removal organization. The agreement must identify and ensure the availability of specified personnel and equipment required under this subpart within stipulated response times in the specified geographic areas;

(2) Certification by the facility owner or operator that specified personnel and equipment required under this subpart are owned, operated, or under the direct control of the facility owner or operator, and are available within stipulated response times in the specified geographic areas;

(3) Active membership in a local or regional oil spill removal organization that has identified specified personnel

and equipment required under this subpart that are available to respond to a discharge within stipulated response times in the specified geographic areas;

(4) A document which—

(i) Identifies the personnel, equipment, and services capable of being provided by the oil spill removal organization within stipulated response times in the specified geographic areas;

(ii) Sets out the parties' acknowledgment that the oil spill removal organization intends to commit the resources in the event of a response;

(iii) Permits the Coast Guard to verify the availability of the identified response resources through tests, inspections, and drills; and

(iv) Is referenced in the response plan; or

(5) The identification of an oil spill removal organization with specified equipment and personnel available within stipulated response times in specified geographic areas. The organization must provide written consent to being identified in the plan.

(b) The contracts and documents required in paragraph (a) of this section must be retained at the facility and must be produced for review upon request by the COTP.

§ 154.1029 Worst case discharge.

(a) The response plan must use the appropriate criteria in this section to develop the worst case discharge.

(b) For the MTR segment of a facility, not less than—

(1) Where applicable, the loss of the entire capacity of all in-line and break out tank(s) needed for the continuous operation of the pipelines used for the purposes of handling or transporting oil, in bulk, to or from a vessel regardless of the presence of secondary containment; plus

(2) The discharge from all piping carrying oil between the marine transfer manifold and the non-transportation-related portion of the facility. The discharge from each pipe is calculated as follows: The maximum time to discover the release from the pipe in hours, plus the maximum time to shut down flow from the pipe in hours (based on historic discharge data or the best estimate in the absence of historic discharge data for the facility) multiplied by the maximum flow rate expressed in barrels per hour (based on the maximum relief valve setting or maximum system pressure when relief valves are not provided) plus the total line drainage volume expressed in barrels for the pipe between the marine manifold and the non-transportation-related portion of the facility; and

(c) For a mobile facility it means the loss of the entire contents of the container in which the oil is stored or transported.

§ 154.1030 General response plan contents.

(a) The plan must be written in English.

(b) A response plan must be divided into the sections listed in this paragraph and formatted in the order specified herein unless noted otherwise. It must also have some easily found marker identifying each section listed below. The following are the sections and subsections of a facility response plan:

(1) Introduction and plan contents.

(2) Emergency response action plan:

(i) Notification procedures.

(ii) Facility's spill mitigation procedures.

(iii) Facility's response activities.

(iv) Fish and wildlife and sensitive environments.

(v) Disposal plan.

(3) Training and Exercises:

(i) Training procedures.

(ii) Exercise procedures.

(4) Plan review and update procedures.

(5) Appendices.

(i) Facility-specific information.

(ii) List of contacts.

(iii) Equipment lists and records.

(iv) Communications plan.

(v) Site-specific safety and health plan.

(vi) List of acronyms and definitions.

(vii) A geographic-specific appendix for each zone in which a mobile facility operates.

(c) The required contents for each section and subsection of the plan are contained in §§ 154.1035, 154.1040, and 154.1041, as appropriate.

(d) The sections and subsections of response plans submitted to the COTP

must contain at a minimum all the information required in §§ 154.1035, 154.1040, and 154.1041, as appropriate. It may contain other appropriate sections, subsections, or information that are required by other Federal, State, and local agencies.

(e) For initial and subsequent submission, a plan that does not follow the format specified in paragraph (b) of this section must be supplemented with a detailed cross-reference section to identify the location of the applicable sections required by this subpart.

(f) The information contained in a response plan must be consistent with the National Oil and Hazardous Substances Pollution Contingency Plan (NCP) (40 CFR part 300) and the Area Contingency Plan(s) (ACP) covering the area in which the facility operates. Facility owners or operators shall ensure that their response plans are in accordance with the ACP in effect 6 months prior to initial plan submission or the annual plan review required under § 154.1065(a). Facility owners or operators are not required to, but may at their option, conform to an ACP which is less than 6 months old at the time of plan submission.

§ 154.1035 Specific requirements for facilities that could reasonably be expected to cause significant and substantial harm to the environment.

(a) *Introduction and plan content.* This section of the plan must include facility and plan information as follows:

(1) The facility's name, street address, city, county, state, ZIP code, facility telephone number, and telefacsimile number, if so equipped. Include mailing address if different from street address.

(2) The facility's location described in a manner that could aid both a reviewer and a responder in locating the specific facility covered by the plan, such as, river mile or location from a known landmark that would appear on a map or chart.

(3) The name, address, and procedures for contacting the facility's owner or operator on a 24-hour basis.

(4) A table of contents.

(5) During the period that the submitted plan does not have to conform to the format contained in this subpart, a cross index, if appropriate.

(6) A record of change(s) to record information on plan updates.

(b) *Emergency Response Action Plan.* This section of the plan must be organized in the subsections described in this paragraph:

(1) *Notification procedures.* (i) This subsection must contain a prioritized list identifying the person(s), including name, telephone number, and their role in the plan, to be notified of a discharge or substantial threat of a discharge of oil. The telephone number need not be provided if it is listed separately in the list of contacts required in the plan. This Notification Procedures listing must include—

(A) Facility response personnel, the spill management team, oil spill removal organizations, and the qualified individual(s) and the designated alternate(s); and

(B) Federal, State, or local agencies, as required.

(ii) This subsection must include a form, such as that depicted in Figure 1, which contains information to be provided in the initial and follow-up notifications to Federal, State, and local agencies. The form shall include notification of the National Response Center as required in part 153 of this chapter. Copies of the form also must be placed at the location(s) from which notification may be made. The initial notification form must include space for the information contained in Figure 1. The form must contain a prominent statement that initial notification must not be delayed pending collection of all information.

FIGURE 1—INFORMATION ON DISCHARGE *

[Involved Parties]

(A) Reporting party	(B) Suspected responsible party
Name	Name
Phones () –	Phones () –
Company	Company
Position	Organization Type:
Address	Private citizen
Address	Private enterprise
	Public utility
	Local government
	State government
	Federal government
City	City
State	State
Zip	Zip

* It is not necessary to wait for all information before calling NRC. National Response Center—1–800–424–8802 or direct telephone: 202–267–2675.

Were materials Discharged (Y/N)?
Calling for Responsible Party (Y/N)

Incident Description

Source and/or Cause of Incident

Date - - Time:
Cause

Incident Address/Location Nearest City
Distance from City
Storage Tank Container Type—Above ground (Y/N) Below ground (Y/N) Unknown

Facility Capacity

Tank Capacity
Latitude Degrees
Longitude Degrees
Mile Post or River Mile

Materials

Discharge Unit of Quantity Measure Discharged Material Quantity in Water

Response Action

Actions Taken to Correct or Mitigate Incident

Impact

Number of Injuries Number of Fatalities
Were there Evacuations (Y/N/U)? Number Evacuated
Was there any Damage (Y/N/U)? Damage in Dollars

Additional Information

Any information about the Incident not recorded elsewhere in the report

Caller Notifications

USCG EPA State Other

(2) *Facility's spill mitigation procedures.* (i) This subsection must describe the volume(s) and oil groups that would be involved in the—

(A) Average most probable discharge from the MTR facility;

(B) Maximum most probable discharge from the MTR facility;

(C) Worst case discharge from the MTR facility; and

(D) Where applicable, the worst case discharge from the non-transportation-related facility. This must be the same volume provided in the response plan for the non-transportation-related facility.

(ii) This subsection must contain prioritized procedures for facility personnel to mitigate or prevent any discharge or substantial threat of a discharge of oil resulting from operational activities associated with internal or external facility transfers including specific procedures to shut down affected operations. Facility personnel responsible for performing specified procedures to mitigate or prevent any discharge or potential discharge shall be identified by job title. A copy of these procedures shall be maintained at the facility operations center. These procedures must address actions to be taken by facility personnel in the event of a discharge, potential discharge, or emergency involving the following equipment and scenarios:

(A) Failure of manifold, mechanical loading arm, other transfer equipment, or hoses, as appropriate;

(B) Tank overfill;

(C) Tank failure;

(D) Piping rupture;

(E) Piping leak, both under pressure and not under pressure, if applicable;

(F) Explosion or fire; and

(G) Equipment failure (e.g. pumping system failure, relief valve failure, or other general equipment relevant to operational activities associated with internal or external facility transfers.)

(iii) This subsection must contain a listing of equipment and the responsibilities of facility personnel to mitigate an average most probable discharge.

(3) *Facility's response activities.* (i) This subsection must contain a description of the facility personnel's responsibilities to initiate a response and supervise response resources pending the arrival of the qualified individual.

(ii) This subsection must contain a description of the responsibilities and authority of the qualified individual and alternate as required in § 154.1026.

(iii) This subsection must describe the organizational structure that will be used to manage the response actions. This structure must include the following functional areas.

(A) Command and control;

(B) Public information;

(C) Safety;

(D) Liaison with government agencies;

(E) Spill Operations;

(F) Planning;

(G) Logistics support; and

(H) Finance.

(iv) This subsection of the plan must identify the oil spill removal organizations and the spill management team that will be capable of providing the following resources:

(A) Equipment and supplies to meet the requirements of §§ 154.1045, 154.1047, or subparts H or I of this part, as appropriate.

(B) Trained personnel necessary to continue operation of the equipment and staff the oil spill removal organization and spill management team for the first 7 days of the response.

(v) This section must include job descriptions for each spill management team member within the organizational structure described in paragraph (b)(3)(iii) of this section. These job descriptions must include the responsibilities and duties of each spill management team member in a response action.

(vi) For facilities that handle, store, or transport group II through group IV petroleum oils, and that operate in waters where dispersant use is pre-authorized, this subsection of the plan must also separately list the resource providers and specific resources, including appropriately trained dispersant-application personnel, necessary to provide the dispersant capabilities required in this subpart. All resource providers and resources must be available by contract or other approved means as described in § 154.1028(a). The dispersant resources to be listed within this section must include the following:

(A) Identification of each primary dispersant staging site to be used by each dispersant-application platform to meet the requirements of this subpart.

(B) Identification of the platform type, resource-providing organization,

location, and dispersant payload for each dispersant-application platform identified. Location data must identify the distance between the platform's home base and the identified primary dispersant staging site for this section.

(C) For each unit of dispersant stockpile required to support the effective daily application capacity (EDAC) of each dispersant-application platform necessary to sustain each intended response tier of operation, identify the dispersant product resource provider, location, and volume. Location data must include the stockpile's distance to the primary staging sites where the stockpile would be loaded onto the corresponding platforms.

(D) If an oil spill removal organization has been evaluated by the Coast Guard, and its capability is equal to or exceeds the response capability needed by the owner or operator, the section may identify only the oil spill removal organization, and not the information required in paragraphs (b)(3)(vi)(A) through (b)(3)(vi)(C) of this section.

(vii) This subsection of the plan must also separately list the resource providers and specific resources necessary to provide aerial oil tracking capabilities required in this subpart. The oil tracking resources to be listed within this section must include the following:

(A) The identification of a resource provider; and

(B) Type and location of aerial surveillance aircraft that are ensured available, through contract or other approved means, to meet the oil tracking requirements of §154.1045(j).

(viii) For mobile facilities that operate in more than one COTP zone, the plan must identify the oil spill removal organization and the spill management team in the applicable geographic-specific appendix. The oil spill removal organization(s) and the spill management team discussed in paragraph (b)(3)(iv) of this section must be included for each COTP zone in which the facility will handle, store, or transport oil in bulk.

(ix) For mobile facilities that operate in more than one COTP zone, the plan must identify the oil spill removal organization and the spill management team in the applicable geographic-specific appendix. The oil spill removal organization(s) and the spill management team discussed in paragraph (b)(3)(iv)(A) of this section must be included for each COTP zone in which the facility will handle, store, or transport oil in bulk.

(4) *Fish and wildlife and sensitive environments.* (i) This section of the plan must identify areas of economic importance and environmental sensitivity, as identified in the ACP, which are potentially impacted by a worst case discharge. ACPs are required under section 311(j)(4) of the FWPCA to identify fish and wildlife and sensitive environments. The applicable ACP shall be used to designate fish and wildlife and sensitive environments in the plan. Changes to the ACP regarding fish and wildlife and sensitive environments shall be included in the annual update of the response plan, when available.

(ii) For a worst case discharge from the facility, this section of the plan must—

(A) List all fish and wildlife and sensitive environments identified in the ACP which are potentially impacted by a discharge of persistent oils, non-persistent oils, or non-petroleum oils.

(B) Describe all the response actions that the facility anticipates taking to protect these fish and wildlife and sensitive environments.

(C) Contain a map or chart showing the location of those fish and wildlife and sensitive environments which are potentially impacted. The map or chart shall also depict each response action that the facility anticipates taking to protect these areas. A legend of activities must be included on the map page.

(iii) For a worst case discharge, this section must identify appropriate equipment and required personnel, available by contract or other approved means as described in §154.1028, to protect fish and wildlife and sensitive environments which fall within the distances calculated using the methods outlined in this paragraph as follows:

(A) Identify the appropriate equipment and required personnel to protect all fish and wildlife and sensitive environments in the ACP for the distances, as calculated in paragraph (b)(4)(iii)(B) of this section, that the persistent oils, non-persistent oils, or non-petroleum

oils are likely to travel in the noted geographic area(s) and number of days listed in table 2 of appendix C of this part;

(B) Calculate the distances required by paragraph (b)(4)(iii)(A) of this section by selecting one of the methods described in this paragraph;

(*1*) Distances may be calculated as follows:

(*i*) For persistent oils and non-petroleum oils discharged into non-tidal waters, the distance from the facility reached in 48 hours at maximum current.

(*ii*) For persistent and non-petroleum oils discharged into tidal waters, 15 miles from the facility down current during ebb tide and to the point of maximum tidal influence or 15 miles, whichever is less, during flood tide.

(*iii*) For non-persistent oils discharged into non-tidal waters, the distance from the facility reached in 24 hours at maximum current.

(*iv*) For non-persistent oils discharged into tidal waters, 5 miles from the facility down current during ebb tide and to the point of maximum tidal influence or 5 miles, whichever is less, during flood tide.

(*2*) A spill trajectory or model may be substituted for the distances calculated under paragraph (b)(4)(iii)(B)(*l*) *of this section*. The spill trajectory or model must be acceptable to the COTP.

(*3*) The procedures contained in the Environmental Protection's Agency's regulations on oil pollution prevention for non-transportation-related onshore facilities at 40 CFR part 112, appendix C, Attachment C-III may be substituted for the distances listed in non-tidal and tidal waters; and

(C) Based on historical information or a spill trajectory or model, the COTP may require the additional fish and wildlife and sensitive environments also be protected.

(5) *Disposal Plan*. This subsection must describe any actions to be taken or procedures to be used to ensure that all recovered oil and oil contaminated debris produced as a result of any discharge are disposed according to Federal, state, or local requirements.

(c) *Training and exercises*. This section must be divided into the following two subsections:

(1) *Training procedures*. This subsection must describe the training procedures and programs of the facility owner or operator to meet the requirements in § 154.1050.

(2) *Exercise procedures*. This subsection must describe the exercise program to be carried out by the facility owner or operator to meet the requirements in § 154.1055.

(d) *Plan review and update procedures*. This section must address the procedures to be followed by the facility owner or operator to meet the requirements of § 154.1065 and the procedures to be followed for any post-discharge review of the plan to evaluate and validate its effectiveness.

(e) *Appendices*. This section of the response plan must include the appendices described in this paragraph.

(1) *Facility-specific information*. This appendix must contain a description of the facility's principal characteristics.

(i) There must be a physical description of the facility including a plan of the facility showing the mooring areas, transfer locations, control stations, locations of safety equipment, and the location and capacities of all piping and storage tanks.

(ii) The appendix must identify the sizes, types, and number of vessels that the facility can transfer oil to or from simultaneously.

(iii) The appendix must identify the first valve(s) on facility piping separating the transportation-related portion of the facility from the non-transportation-related portion of the facility, if any. For piping leading to a manifold located on a dock serving tank vessels, this valve is the first valve inside the secondary containment required by 40 CFR part 112.

(iv) The appendix must contain information on the oil(s) and hazardous material handled, stored, or transported at the facility in bulk. A material safety data sheet meeting the requirements of 29 CFR 1910.1200, 33 CFR 154.310(a)(5) or an equivalent will meet this requirement. This information can be maintained separately providing it is readily available and the appendix identifies its location. This information must include—

(A) The generic or chemical name;

(B) A description of the appearance and odor;

(C) The physical and chemical characteristics;

(D) The hazards involved in handling the oil(s) and hazardous materials. This shall include hazards likely to be encountered if the oil(s) and hazardous materials come in contact as a result of a discharge; and

(E) A list of firefighting procedures and extinguishing agents effective with fires involving the oil(s) and hazardous materials.

(v) The appendix may contain any other information which the facility owner or operator determines to be pertinent to an oil spill response.

(2) *List of contacts.* This appendix must include information on 24-hour contact of key individuals and organizations. If more appropriate, this information may be specified in a geographic-specific appendix. The list must include—

(i) The primary and alternate qualified individual(s) for the facility;

(ii) The contact(s) identified under paragraph (b)(3)(iv) of this section for activation of the response resources; and

(iii) Appropriate Federal, State, and local officials.

(3) *Equipment list and records.* This appendix must include the information specified in this paragraph.

(i) The appendix must contain a list of equipment and facility personnel required to respond to an average most probable discharge, as defined in §154.1020. The appendix must also list the location of the equipment.

(ii) The appendix must contain a detailed listing of all the major equipment identified in the plan as belonging to an oil spill removal organization(s) that is available, by contract or other approved means as described in §154.1028(a), to respond to a maximum most probable or worst case discharge, as defined in §154.1020. The detailed listing of all major equipment may be located in a separate document referenced by the plan. Either the appendix or the separate document referenced in the plan must provide the location of the major response equipment.

(iii) It is not necessary to list response equipment from oil spill removal organization(s) when the organization has been classified by the Coast Guard and their capacity has been determined to equal or exceed the response capability needed by the facility. For oil spill removal organization(s) classified by the Coast Guard, the classification must be noted in this section of the plan. When it is necessary for the appendix to contain a listing of response equipment, it shall include all of the following items that are identified in the response plan: Skimmers; booms; dispersant application, in-situ burning, bioremediation equipment and supplies, and other equipment used to apply other chemical agents on the NCP Product Schedule (if applicable); communications, firefighting, and beach cleaning equipment; boats and motors; disposal and storage equipment; and heavy equipment. The list must include for each piece of equipment—

(A) The type, make, model, and year of manufacture listed on the nameplate of the equipment;

(B) For oil recovery devices, the effective daily recovery rate, as determined using section 6 of appendix C of this part;

(C) For containment boom, the overall boom height (draft and freeboard) and type of end connectors;

(D) The spill scenario in which the equipment will be used for or which it is contracted;

(E) The total daily capacity for storage and disposal of recovered oil;

(F) For communication equipment, the type and amount of equipment intended for use during response activities. Where applicable, the primary and secondary radio frequencies must be specified.

(G) Location of the equipment; and

(H) The date of the last inspection by the oil spill removal organization(s).

(4) *Communications plan.* This appendix must describe the primary and alternate method of communication during discharges, including communications at the facility and at remote locations within the areas covered by the response plan. The appendix may refer to additional communications packages provided by the oil spill removal

organization. This may reference another existing plan or document.

(5) *Site-specific safety and health plan.* This appendix must describe the safety and health plan to be implemented for any response location(s). It must provide as much detailed information as is practicable in advance of an actual discharge. This appendix may reference another existing plan requiring under 29 CFR 1910.120.

(6) *List of acronyms and definitions.* This appendix must list all acronyms used in the response plan including any terms or acronyms used by Federal, State, or local governments and any operational terms commonly used at the facility. This appendix must include all definitions that are critical to understanding the response plan.

[CGD 91–036, 61 FR 7917, Feb. 29, 1996, as amended by USCG–2000–7223, 65 FR 40058, June 29, 2000; USCG–2001–9286, 66 FR 33641, June 25, 2001; USCG–2008–0179, 73 FR 35014, June 19, 2008; USCG–2001–8661, 74 FR 45023, Aug. 31, 2009]

§ 154.1040 Specific requirements for facilities that could reasonably be expected to cause substantial harm to the environment.

(a) The owner or operator of a facility that, under § 154.1015, could reasonably be expected to cause substantial harm to the environment, shall submit a response plan that meets the requirements of § 154.1035, except as modified by this section.

(b) The facility's response activities section of the response plan need not list the facility or corporate organizational structure that will be used to manage the response, as required by § 154.1035(b)(3)(iii).

(c) The owner or operator of a facility must ensure the availability of response resources required to be identified in § 154.1035(b)(3)(iv) by contract or other approved means described in § 154.1028.

(d) A facility owner or operator must have at least 200 feet of containment boom and the means of deploying and anchoring the boom available at the spill site within 1 hour of the detection of a spill to respond to the average most probable discharge in lieu of the quantity of containment boom specified in § 154.1045(c)(1). Based on site-specific or facility-specific information, the COTP may specify that additional quantities of containment boom are available within one hour. In addition, there must be adequate sorbent material for initial response to an average most probable discharge. If the facility is a fixed facility, the containment boom and sorbent material must be located at the facility. If the facility is a mobile facility, the containment boom and sorbent must be available locally and be at the site of the discharge within 1 hour of its discovery.

§ 154.1041 Specific response information to be maintained on mobile MTR facilities.

(a) Each mobile MTR facility must carry the following information as contained in the response plan when performing transfer operations:

(1) A description of response activities for a discharge which may occur during transfer operations. This may be a narrative description or a list of procedures to be followed in the event of a discharge.

(2) Identity of response resources to respond to a discharge from the mobile MTR facility.

(3) List of the appropriate persons and agencies (including the telephone numbers) to be contacted in regard to a discharge and its handling, including the National Response Center.

(b) The owner or operator of the mobile facility must also retain the information in this paragraph at the principal place of business.

§ 154.1045 Response plan development and evaluation criteria for facilities that handle, store, or transport Group I through Group IV petroleum oils.

(a) The owner or operator of a facility that handles, stores, or transports Group I through Group IV petroleum oils shall use the criteria in this section to evaluate response resources identified in the response plan for the specified operating environment.

(1) The criteria in Table 1 of appendix C of this part are to be used solely for identification of appropriate equipment in a response plan. These criteria reflect conditions used for planning purposes to select mechanical response equipment and are not conditions that

would limit response actions or affect normal facility operations.

(2) The response resources must be evaluated considering limitations for the COTP zones in which the facility operates, including but not limited to—

(i) Ice conditions;

(ii) Debris;

(iii) Temperature ranges;

(iv) Weather-related visibility; and

(v) Other appropriate environmental conditions as determined by the COTP.

(3) The COTP may reclassify a specific body of water or location within the COTP zone. Any reclassifications will be identified by the COTP in the applicable ACP. Reclassifications may be to—

(i) A more stringent operating environment if the prevailing wave conditions exceed the significant wave height criteria during more than 35 percent of the year; or

(ii) A less stringent operating environment if the prevailing wave conditions do not exceed the significant wave height criteria for the less stringent operating environment during more than 35 percent of the year.

(b) Response equipment must—

(1) Meet or exceed the operating criteria listed in Table 1 of appendix C of this part;

(2) Function in the applicable operating environment; and

(3) Be appropriate for the petroleum oil carried.

(c) The response plan for a facility that handles, stores, or transports Group I through Group IV petroleum oils must identify response resources that are available, by contract or other approved means as described in §154.1028(a)(1)(4), to respond to the facility's average most probable discharge. The response resources must include, at a minimum—

(1) 1,000 feet of containment boom or two times the length of the largest vessel that regularly conducts petroleum oil transfers to or from the facility, whichever is greater, and the means of deploying and anchoring the boom available at the spill site within 1 hour of the detection of a spill; and

(2) Oil recovery devices and recovered oil storage capacity capable of being at the spill site within 2 hours of the discovery of a petroleum oil discharge from a facility.

(d) The response plan for a facility that handles, stores, or transports Group I through Group IV petroleum oils must identify response resources that are available, by contract or other approved means as described in §154.1028(a)(1)(4), to respond to a discharge up to the facility's maximum most probable discharge volume.

(1) The response resources must include sufficient containment boom, oil recovery devices, and storage capacity for any recovery of up to the maximum most probable discharge planning volume, as contained in appendix C.

(2) The response resources must be appropriate for each group of petroleum oil identified in §154.1020 that is handled, stored, or transported by the facility.

(3) These response resources must be positioned such that they can arrive at the scene of a discharge within the following specified times:

(i) The equipment identified in paragraphs (c)(1) and (c)(2) of this section or in §154.1040(d) must arrive within the times specified in those paragraphs or that section, as appropriate.

(ii) In higher volume port areas and the Great Lakes, response resources must be capable of arriving on scene within 6 hours of the discovery of a petroleum oil discharge from a facility.

(iii) In all other locations, response resources must be capable of arriving on scene within 12 hours of the discovery of a petroleum oil discharge from a facility.

(4) The COTP may determine that mobilizing response resources to an area beyond the response times indicated in this paragraph invalidates the response plan. In this event, the COTP may impose additional operational restrictions (e.g., limitations on the number of transfers at a facility), or, at the COTP's discretion, the facility may operate with temporarily modified response plan development and evaluation criteria (e.g., modified response times, alternate response resources, etc.).

(e) The response plan for a facility that handles, stores, or transports Group I through Group IV petroleum

oils must identify the response resources that are available, by contract or other approved means as described in §154.1028(a)(1)(4), to respond to the worst case discharge volume of petroleum oil to the maximum extent practicable.

(1) The location of these response resources must be suitable to meet the response times identified in paragraph (f) of this section for the applicable geographic area(s) of operation and response tier.

(2) The response resources must be appropriate for—

(i) The volume of the facility's worst case discharge;

(ii) Group(s) of petroleum oil as identified in §154.1020 that are handled, stored, or transported by the facility; and

(iii) The geographic area(s) in which the facility operates.

(3) The response resources must include sufficient boom, oil recovery devices, and storage capacity to recover the worst case discharge planning volumes.

(4) The guidelines in appendix C of this part must be used for calculating the quantity of response resources required to respond at each tier to the worst case discharge to the maximum extent practicable.

(5) When determining response resources necessary to meet the requirements of this section, a portion of those resources must be capable of use in close-to-shore response activities in shallow water. The following percentages of the response equipment identified for the applicable geographic area must be capable of operating in waters of 6 feet or less depth.

(i) Offshore—10 percent.

(ii) Nearshore/inland/Great Lakes/rivers and canals—20 percent.

(6) The COTP may determine that mobilizing response resources to an area beyond the response times indicated in this paragraph invalidates the response plan. In this event, the COTP may impose additional operational restrictions (e.g., limitations on the number of transfers at a facility), or, at the COTP's discretion, the facility may be permitted to operate with temporarily modified response plan development and evaluation criteria (e.g., modified response times, alternate response resources, etc.).

(f) Response equipment identified in a response plan for a facility that handles, stores, or transports Group I through Group IV petroleum oils must be capable of arriving on scene within the times specified in this paragraph for the applicable response tier in a higher volume port area, Great Lakes, and in other areas. Response times for these tiers from the time of discovery of a discharge are—

	Tier 1 (hrs.)	Tier 2 (hrs.)	Tier 3 (hrs.)
Higher volume port area (except for a TAPAA facility located in Prince William Sound, see §154.1135)	6	30	54
Great Lakes	12	36	60
All other river and canal, inland, nearshore, and offshore areas	12	36	60

(g) For the purposes of arranging for response resources for a facility that handles, stores, or transports Group I through Group IV petroleum oils, by contract or other approved means as described in §154.1028(a)(1)–(4), response equipment identified for Tier 1 plan credit must be capable of being mobilized and en route to the scene of a discharge within 2 hours of notification. The notification procedures identified in the plan must provide for notification and authorization of mobilization of identified Tier 1 response resources—

(1) Either directly or through the qualified individual; and

(2) Within 30 minutes of a discovery of a discharge or substantial threat of discharge.

(h) Response resources identified for Tier 2 and Tier 3 plan credit must be capable of arriving on scene within the time specified for the applicable tier.

(i) The owner or operator of a facility that handles, stores, or transports groups II through IV petroleum oils within the inland, nearshore, or offshore areas where pre-authorization for dispersant use exists must identify in their response plan, and ensure the availability of, through contract or other approved means, response resources capable of conducting dispersant operations within those areas.

(1) Dispersant response resources must be capable of commencing dispersant-application operations at the site of a discharge within 7 hours of the decision by the Federal On-Scene Coordinator to use dispersants.

(2) Dispersant response resources must include all of the following:

(i) Sufficient volumes of dispersants for application as required by paragraph (i)(3) of this section. Any dispersants identified in a response plan must be of a type listed on the National Oil and Hazardous Substances Pollution Contingency Plan Product Schedule (which is contained in 40 CFR part 300, and available online from the U.S. Government Printing Office).

(ii) Dispersant-application platforms capable of delivering and applying the dispersant on a discharge in the amounts as required by paragraph (i)(3) of this section. At least 50 percent of each EDAC tier requirement must be achieved through the use of fixed-wing, aircraft-based application platforms. For dispersant-application platforms not detailed within the DMP2, adequacy of performance criteria must be documented by presentation of independent evaluation materials (e.g., field tests and reports of actual use) that record the performance of the platform.

(iii) Dispersant-application systems that are consistent in design with, and are capable of applying dispersants within, the performance criteria in ASTM F1413–07 (incorporated by reference, *see* § 154.106). For dispersant-application systems not fully covered by ASTM F1413–07, such as fire monitor-type applicators, adequacy of performance criteria must be documented by presentation of independent evaluation materials (e.g., laboratory tests, field tests, and reports of actual use) that record the design of performance specifications.

(iv) Dispersant-application personnel trained in and capable of applying dispersants according to the recommended procedures contained within ASTM F1737–07 (incorporated by reference, *see* § 154.106).

(3) Dispersant stockpiles, application platforms, and other supporting resources must be available in a quantity and type sufficient to treat a facility's worst-case discharge (as determined by using the criteria in appendix C, section 8) or in quantities sufficient to meet the requirements in Table 154.1045(i) of this section, whichever is the lesser amount.

TABLE 154.1045(i)—TIERS FOR EFFECTIVE DAILY APPLICATION CAPABILITY

	Response time for completed application (hours)	Dispersant application dispersant: oil treated in gallons (Gulf Coast)	Dispersant application dispersant: oil treated in gallons all other U.S.
Tier 1	12	8,250:165,000	4,125:82,500
Tier 2	36	23,375:467,000	23,375:467,000
Tier 3	60	23,375:467,000	23,375:467,000
Total	60	55,000:1,100,000	50,875:1,017,500

NOTE TO TABLE 154.1045(i): Gulf Coast Tier 1 is higher due to greater potential spill size and frequency in that area, and it is assumed that dispersant stockpiles would be centralized in the Gulf area. Alternative application ratios may be considered based upon submission to Coast Guard Headquarters, Office of Incident Management and Preparedness (CG–533, 202–372–2234, 2100 2nd Street, SW., room 2100, Washington, DC 20593) of peer-reviewed scientific evidence of improved capability.

(j) The owner or operator of a facility handling Groups I through IV petroleum oil as a primary cargo must identify in the response plan, and ensure the availability through contract or other approved means, of response resources necessary to provide aerial oil tracking to support oil spill assessment and cleanup activities. Facilities operating exclusively on inland rivers are not required to comply with this paragraph. Aerial oil tracking resources must:

(1) Be capable of arriving at the site of a discharge in advance of the arrival of response resources identified in the

plan for tiers 1, 2, and 3 Worst-Case Discharge response times, and for a distance up to 50 nautical miles from shore (excluding inland rivers);

(2) Be capable of supporting oil spill removal operations continuously for three 10-hour operational periods during the initial 72 hours of the discharge;

(3) Include appropriately located aircraft and personnel capable of meeting the response time requirement for oil tracking from paragraph (j)(1) of this section; and

(4) Include sufficient numbers of aircraft, pilots, and trained observation personnel to support oil spill removal operations, commencing upon initial assessment, and capable of coordinating on-scene cleanup operations, including dispersant and mechanical recovery operations. Observation personnel must be trained in:

(i) The protocols of oil-spill reporting and assessment, including estimation of slick size, thickness, and quantity; and

(ii) The use of assessment techniques in ASTM F1779–08 (incorporated by reference, *see* §154.106), and familiar with the use of other guides, such as NOAA's ''Open Water Oil Identification Job Aid for Aerial Observation,'' and NOAA's ''Characteristic Coastal Habitats'' guide (available on the Internet at *http://response.restoration.noaa.gov/*use the following links in the order presented: Home|Emergency Response|Responding to Oil Spills).

(k) A response plan for a facility that handles, stores, or transports Group I through Group IV petroleum oils must identify response resources with firefighting capability. The owner or operator of a facility that does not have adequate firefighting resources located at the facility or that can not rely on sufficient local firefighting resources must identify and ensure, by contract or other approved means as described in §154.1028(a)(1)–(4), the availability of adequate firefighting resources. The response plan must also identify an individual located at the facility to work with the fire department for petroleum oil fires. This individual shall also verify that sufficient well-trained firefighting resources are available within a reasonable time to respond to a worst case discharge. The individual may be the qualified individual as defined in §154.1020 and identified in the response plan or another appropriate individual located at the facility.

(l) The response plan for a facility that handles, stores, or transports Groups I through IV petroleum oils must identify equipment and required personnel available, by contract or other approved means as described in §154.1028(a) (1)–(4), to protect fish and wildlife and sensitive environments.

(1) Except as set out in paragraph (k)(2) of this section, the identified response resources must include the quantities of boom sufficient to protect fish and wildlife and sensitive environments as required by §154.1035(b)(4).

(2) The resources and response methods identified in a facility response plan must be consistent with the required resources and response methods to be used in fish and wildlife and sensitive environments, contained in the appropriate ACP. Facility owners or operators shall ensure that their response plans are in accordance with the ACP in effect 6 months prior to initial plan submission or the annual plan review required under §154.1065(a). Facility owners or operators are not required to, but may at their option, conform to an ACP which is less than 6 months old at the time of plan submission.

(m) The response plan for a facility that handles, stores, or transports Groups I through IV petroleum oils must identify an oil spill removal organization(s) with response resources that are available, by contract or other approved means as described in §154.1028(a) (1)–(4), to effect a shoreline cleanup operation commensurate with the quantity of emulsified petroleum oil to be planned for in shoreline cleanup operations.

(1) Except as required in paragraph (l)(2) of this section, the shoreline cleanup response resources required must be determined as described in appendix C of this part.

(2) The resources and response methods identified in a facility response plan must be consistent with the required shoreline cleanup resources and methods contained in the appropriate ACP. Facility owners or operators

shall ensure that their response plans are in accordance with the ACP in effect 6 months prior to initial plan submission or the annual plan review required under § 154.1065(a). Facility owners or operators are not required to, but may at their option, conform to an ACP which is less than 6 months old at the time of plan submission.

(n) Appendix C of this part describes the procedures to determine the maximum extent practicable quantity of response resources that must be identified and available, by contract or other approved means as described in § 154.1028(a) (1)–(4), for the maximum most probable discharge volume, and for each worst case discharge response tier.

(1) Included in appendix C of this part is a cap that recognizes the practical and technical limits of response capabilities that an individual facility owner or operator can be expected to contract for in advance.

(2) Table 5 in appendix C of this part lists the caps that apply in February 18, 1993, and February 18, 1998. Depending on the quantity and type of petroleum oil handled by the facility and the facility's geographic area of operations, the resource capability caps in this table may be reached. The owner or operator of a facility whose estimated recovery capacity exceeds the applicable contracting caps in Table 5 shall identify sources of additional equipment equal to twice the cap listed in Tiers 1, 2, and 3 or the amount necessary to reach the calculated planning volume, whichever is lower. The identified resources must be capable of arriving on scene not later than the Tier 1, 2, and 3 response times in this section. No contract is required. While general listings of available response equipment may be used to identify additional sources, a response plan must identify the specific sources, locations, and quantities of equipment that a facility owner or operator has considered in his or her planning. When listing Coast Guard classified oil spill removal organization(s) which have sufficient removal capacity to recover the volume above the response capability cap for the specific facility, as specified in Table 5 in appendix C of this part, it is not necessary to list specific quantities of equipment.

(o) The Coast Guard will continue to evaluate the environmental benefits, cost efficiency and practicality of increasing mechanical recovery capability requirements. This continuing evaluation is part of the Coast Guard's long term commitment to achieving and maintaining an optimum mix of oil spill response capability across the full spectrum of response modes. As best available technology demonstrates a need to evaluate or change mechanical recovery capacities, a review of cap increases and other requirements contained within this subpart may be performed. Any changes in the requirements of this section will occur through a public notice and comment process. During this review, the Coast Guard will determine if established caps remain practicable and if increased caps will provide any benefit to oil spill recovery operations. The review will include, at least, an evaluation of:

(1) Best available technologies for containment and recovery;

(2) Oil spill tracking technology;

(3) High rate response techniques;

(4) Other applicable response technologies; and

(5) Increases in the availability of private response resources.

[CGD 91–036, 61 FR 7917, Feb. 29, 1996, as amended by USCG–2001–8661, 74 FR 45024, Aug. 31, 2009]

§ 154.1047 Response plan development and evaluation criteria for facilities that handle, store, or transport Group V petroleum oils.

(a) An owner or operator of a facility that handles, stores, or transports Group V petroleum oils must provide information in his or her response plan that identifies—

(1) Procedures and strategies for responding to a worst case discharge of Group V petroleum oils to the maximum extent practicable; and

(2) Sources of the equipment and supplies necessary to locate, recover, and mitigate such a discharge.

(b) An owner or operator of a facility that handles, stores, or transports Group V petroleum oil must ensure

that any equipment identified in a response plan is capable of operating in the conditions expected in the geographic area(s) in which the facility operates using the criteria in Table 1 of appendix C of this part. When evaluating the operability of equipment, the facility owner or operator must consider limitations that are identified in the ACPs for the COTP zones in which the facility operates, including—

(1) Ice conditions;

(2) Debris;

(3) Temperature ranges; and

(4) Weather-related visibility.

(c) The owner or operator of a facility that handles, stores, or transports Group V petroleum oil must identify the response resources that are available by contract or other approved means as described in §154.1028. The equipment identified in a response plan must include—

(1) Sonar, sampling equipment, or other methods for locating the petroleum oil on the bottom or suspended in the water column;

(2) Containment boom, sorbent boom, silt curtains, or other methods for containing the petroleum oil that may remain floating on the surface or to reduce spreading on the bottom;

(3) Dredges, pumps, or other equipment necessary to recover petroleum oil from the bottom and shoreline;

(4) Equipment necessary to assess the impact of such discharges; and

(5) Other appropriate equipment necessary to respond to a discharge involving the type of petroleum oil handled, stored, or transported.

(d) Response resources identified in a response plan for a facility that handles, stores, or transports Group V petroleum oils under paragraph (c) of this section must be capable of being at the spill site within 24 hours of discovery of a discharge.

(e) A response plan for a facility that handles, stores, or transports Group V petroleum oils must identify response resources with firefighting capability. The owner or operator of a facility that does not have adequate firefighting resources located at the facility or that can not rely on sufficient local firefighting resources must identity and ensure, by contract or other approved means as described in §154.1028, the availability of adequate firefighting resources. The response plan must also identify an individual located at the facility to work with the fire department for petroleum oil fires. This individual shall also verify that sufficient well-trained firefighting resources are available within a reasonable response time to a worst case scenario. The individual may be the qualified individual as defined in §154.1020 and identified in the response plan or another appropriate individual located at the facility.

§154.1050 Training.

(a) A response plan submitted to meet the requirements of §154.1035 or §154.1040, as appropriate, must identify the training to be provided to each individual with responsibilities under the plan. A facility owner or operator must identify the method to be used for training any volunteers or casual laborers used during a response to comply with the requirements of 29 CFR 1910.120.

(b) A facility owner or operator shall ensure the maintenance of records sufficient to document training of facility personnel; and shall make them available for inspection upon request by the U.S. Coast Guard. Records for facility personnel must be maintained at the facility for 3 years.

(c) Where applicable, a facility owner or operator shall ensure that an oil spill removal organization identified in a response plan to meet the requirements of this subpart maintains records sufficient to document training for the organization's personnel and shall make them available for inspection upon request by the facility's management personnel, the qualified individual, and U.S. Coast Guard. Records must be maintained for 3 years following completion of training.

(d) The facility owner or operator remains responsible for ensuring that all private response personnel are trained to meet the Occupational Safety and Health Administration (OSHA) standards for emergency response operations in 29 CFR 1910.120.

§154.1055 Exercises.

(a) A response plan submitted by an owner or operator of an MTR facility

must include an exercise program containing both announced and unannounced exercises. The following are the minimum exercise requirements for facilities covered by this subpart:

(1) Qualified individual notification exercises (quarterly).

(2) Spill management team tabletop exercises (annually). In a 3-year period, at least one of these exercises must include a worst case discharge scenario.

(3) Equipment deployment exercises:

(i) Semiannually for facility owned and operated equipment.

(ii) Annually for oil spill removal organization equipment.

(4) Emergency procedures exercises (optional).

(5) Annually, at least one of the exercises listed in § 154.1055(a)(2) through (4) must be unannounced. Unannounced means the personnel participating in the exercise must not be advised in advance, of the exact date, time and scenario of the exercise.

(6) The facility owner or operator shall design the exercise program so that all components of the response plan are exercised at least once every 3 years. All of the components do not have to be exercised at one time; they may be exercised over the 3-year period through the required exercises or through an Area exercise.

(b) A facility owner or operator shall participate in unannounced exercises, as directed by the COTP. The objectives of the unannounced exercises will be to test notifications and equipment deployment for response to the average most probable discharge. After participating in an unannounced exercise directed by a COTP, the owner or operator will not be required to participate in another COTP initiated unannounced exercise for at least 3 years from the date of the exercise.

(c) A facility owner or operator shall participate in Area exercises as directed by the applicable On-Scene Coordinator. The Area exercises will involve equipment deployment to respond to the spill scenario developed by the Exercise Design Team, of which the facility owner or operator will be a member. After participating in an Area exercise, a facility owner or operator will not be required to participate in another Area exercise for at least 6 years.

(d) The facility owner or operator shall ensure that adequate records of all required exercises are maintained at the facility for 3 years. Records shall be made available to the Coast Guard upon request.

(e) The response plan submitted to meet the requirements of this subpart must specify the planned exercise program. The plan must detail the exercise program, including the types of exercises, frequency, scope, objectives and the scheme for exercising the entire response plan every 3 years.

(f) Compliance with the National Preparedness for Response Exercise Program (PREP) Guidelines will satisfy the facility response plan exercise requirements. These guidelines are available from the TASC DEPT Warehouse, 33141Q 75th Avenue, Landover, MD 20875 (fax: 301–386–5394, stock number USCG–X0241). Compliance with an alternative program that meets the requirements of paragraph (a) of this section and has been approved under § 154.1060 will also satisfy the facility response plan exercise requirements.

NOTE TO PARAGRAPH (f): The PREP guidelines are available online at *http://dmses.dot.gov/docimages/pdf1a/198001_web.pdf*.

[CGD 91–036, 61 FR 7917, Feb. 29, 1996, as amended by USCGD–2003–15404, 68 FR 37741, June 25, 2003]

§ 154.1057 Inspection and maintenance of response resources.

(a) A facility owner or operator required to submit a response plan under this part must ensure that—

(1) Containment booms, skimmers, vessels, and other major equipment listed or referenced in the plan are periodically inspected and maintained in good operating condition, in accordance with manufacturer's recommendations, and best commercial practices; and

(2) All inspection and maintenance is documented and that these records are maintained for 3 years.

(b) For equipment which must be inspected and maintained under this section the Coast Guard may—

(1) Verify that the equipment inventories exist as represented;

(2) Verify the existences of records required under this section;

(3) Verify that the records of inspection and maintenance reflect the actual condition of any equipment listed or referenced; and

(4) Inspect and require operational tests of equipment.

(c) This section does not apply to containment booms, skimmers, vessels, and other major equipment listed or referenced in the plan and ensured available from an oil spill removal organization through the written consent required under § 154.1028(a)(5).

§ 154.1060 Submission and approval procedures.

(a) The owner or operator of a facility to which this subpart applies shall submit one copy of a facility response plan meeting the requirements of this subpart to the COTP for initial review and, if appropriate, approval.

(b) The owner or operator of a facility to which this subpart applies shall include a statement certifying that the plan meets the applicable requirements of subparts F, G, H, and I of this part, as appropriate.

(c) For an MTR facility that is located in the inland response zone where the EPA Regional Administrator is the predesignated Federal On-Scene Coordinator, the COTP may consult with the EPA Federal On-Scene Coordinator prior to any final approval.

(d) For an MTR facility identified in § 154.1015(c) of this subpart that is also required to prepare a response plan under 40 CFR part 112, if the COTP determines that the plan meets all applicable requirements and the EPA Regional Administrator raises no objection to the response plan contents, the COTP will notify the facility owner or operator in writing that the plan is approved.

(e) The plan will be valid for a period of up to 5 years. The facility owner or operator must resubmit an updated plan every 5 years as follows:

(1) For facilities identified in only § 154.1015(b) of this subpart, the 5-year period will commence on the date the plan is submitted to the COTP.

(2) For facilities identified in § 154.1015(c) of this subpart, the 5-year period will commence on the date the COTP approves the plan.

(3) All resubmitted response plans shall be accompanied by a cover letter containing a detailed listing of all revisions to the response plan.

(f) For an MTR facility identified in § 154.1015(c)(2) the COTP will notify the facility owner or operator in writing that the plan is approved.

(g) If a COTP determines that a plan does not meet the requirements of this subpart either upon initial submission or upon 5-year resubmission, the COTP will return the plan to the facility owner or operator along with an explanation of the response plan's deficiencies. The owner or operator must correct any deficiencies in accordance with § 154.1070 and return the plan to the COTP within the time specified by the COTP in the letter describing the deficiencies.

(h) The facility owner or operator and the qualified individual and the alternative qualified individual shall each maintain a copy of the most current response plan submitted to the COTP. One copy must be maintained at the facility in a position where the plan is readily available to persons in charge of conducting transfer operations.

§ 154.1065 Plan review and revision procedures.

(a) A facility owner or operator must review his or her response plan(s) annually. This review shall incorporate any revisions to the plan, including listings of fish and wildlife and sensitive environments identified in the ACP in effect 6 months prior to plan review.

(1) For an MTR facility identified in § 154.1015(c) of this subpart as a ''significant and substantial harm facility,'' this review must occur within 1 month of the anniversary date of COTP approval of the plan. For an MTR facility identified in § 154.1015(b) of this subpart, as a ''substantial harm facility'' this review must occur within 1 month of the anniversary date of submission of the plan to the COTP.

(2) The facility owner or operator shall submit any revision(s) to the response plan to the COTP and all other holders of the response plan for information or approval, as appropriate.

(i) Along with the revisions, the facility owner or operator shall submit a cover letter containing a detailed listing of all revisions to the response plan.

(ii) If no revisions are required, the facility owner or operator shall indicate the completion of the annual review on the record of changes page.

(iii) The COTP will review the revision(s) submitted by the owner or operator and will give written notice to the owner or operator of any COTP objection(s) to the proposed revisions within 30 days of the date the revision(s) were submitted to the COTP. The revisions shall become effective not later than 30 days from their submission to the COTP unless the COTP indicates otherwise in writing as provided in this paragraph. If the COTP indicates that the revision(s) need to be modified before implementation, the owner or operator will modify the revision(s) within the time period set by the COTP.

(3) Any required revisions must be entered in the plan and noted on the record of changes page.

(b) The facility owner or operator shall submit revisions to a previously submitted or approved plan to the COTP and all other holders of the response plan for information or approval within 30 days, whenever there is—

(1) A change in the facility's configuration that significantly affects the information included in the response plan;

(2) A change in the type of oil (petroleum oil group) handled, stored, or transported that affects the required response resources;

(3) A change in the name(s) or capabilities of the oil spill removal organization required by § 154.1045;

(4) A change in the facility's emergency response procedures;

(5) A change in the facility's operating area that includes ports or geographic area(s) not covered by the previously approved plan. A facility may not operate in an area not covered in a plan previously submitted or approved, as appropriate, unless the revised plan is approved or interim operating approval is received under § 154.1025; or

(6) Any other changes that significantly affect the implementation of the plan.

(c) Except as required in paragraph (b) of this section, revisions to personnel and telephone number lists included in the response plan do not require COTP approval. The COTP and all other holders of the response plan shall be advised of these revisions and provided a copy of the revisions as they occur.

(d) The COTP may require a facility owner or operator to revise a response plan at any time as a result of a compliance inspection if the COTP determines that the response plan does not meet the requirements of this subpart or as a result of inadequacies noted in the response plan during an actual pollution incident at the facility.

(e) If required by § 154.1035(b)(3) or § 154.1045, a new or existing facility owner or operator must submit the required dispersant and aerial oil tracking resource revisions to a previously submitted or approved plan, made pursuant to § 154.1035(b)(3) or § 154.1045, to the COTP and all other holders of the response plan for information or approval no later than February 22, 2011.

[CGD 91–036, 61 FR 7917, Feb. 29, 1996, as amended by USCG–2001–8661, 74 FR 45025, Aug. 31, 2009]

§ 154.1070 Deficiencies.

(a) The cognizant COTP will notify the facility owner or operator in writing of any deficiencies noted during review of a response plan, drills observed by the Coast Guard, or inspection of equipment or records maintained in connection with this subpart.

(b) Deficiencies shall be corrected within the time period specified in the written notice provided by the COTP. The facility owner or operator who disagrees with a deficiency issued by the COTP may appeal the deficiency to the cognizant COTP within 7 days or the time specified by the COTP to correct the deficiency, whichever is less. This time commences from the date of receipt of the COTP notice. The owner or operator may request a stay from the COTP decision pending appeal in accordance with § 154.1075.

(c) If the facility owner or operator fails to correct any deficiencies or submit a written appeal, the COTP may

invoke the provisions of § 154.1025 prohibiting the facility from storing, handling, or transporting oil.

§ 154.1075 Appeal process.

(a) Any owner or operator of a facility who desires to appeal the classification that a facility could reasonably be expected to cause substantial harm or significant and substantial harm to the environment, shall submit a written request to the cognizant COTP requesting review and reclassification by the COTP. The facility owner or operator shall identify those factors to be considered by the COTP. The factors to be considered by the COTP regarding reclassification of a facility include, but are not limited to, those listed in § 154.1016(b). After considering all relevant material presented by the facility owner or operator and any additional material available to the COTP, the COTP will notify the facility owner or operator of the decision on the reclassification of the facility.

(b) Any facility owner or operator directly affected by an initial determination or action of the COTP may submit a written request to the cognizant COTP requesting review and reconsideration of the COTP's decision or action. The facility owner or operator shall identify those factors to be considered by the COTP in making his or her decision on reconsideration.

(c) Within 10 days of the COTP's decision under paragraph (b) of this section, the facility owner or operator may appeal the decision of the COTP to the District Commander. This appeal shall be made in writing via the cognizant COTP to the District Commander of the district in which the office of the COTP is located.

(d) Within 30 days of the District Commander's decision, the facility owner or operator may formally appeal the decision of the District Commander. This appeal shall be submitted in writing to Commandant (CG–535) via the District Commander.

(e) When considering an appeal, the COTP, District Commander, or Commandant may stay the effect of the decision or action being appealed pending the determination of the appeal.

[CGD 91–036, 61 FR 7930, Feb. 29, 1996, as amended by CGD 96–026, 61 FR 33666, June 28, 1996; USCG–2010–0351, 75 FR 36284, June 25, 2010]

Subpart G—Additional Response Plan Requirements for a Trans-Alaska Pipeline Authorization Act (TAPAA) Facility Operating in Prince William Sound, Alaska

SOURCE: CGD 91–036, 61 FR 7930, Feb. 29, 1996, unless otherwise noted.

§ 154.1110 Purpose and applicability.

(a) This subpart establishes oil spill response planning requirements for a facility permitted under the Tans-Alaska Pipeline Authorization Act (TAPAA), in addition to the requirements of subpart F of this part. The requirements of this subpart are intended for use in developing response plans and identifying response resources during the planning process. They are not performance standards.

(b) The information required by this subpart must be included in the Prince William Sound facility-specific appendix to the facility response plan required by subpart F of this part.

§ 154.1115 Definitions.

In addition to the definitions in this section, the definitions in §§ 154.105 and 154.1020 apply to this subpart. As used in this subpart—

Crude oil means any liquid hydrocarbon mixture occurring naturally in the earth, whether or not treated to render it suitable for transportation, and includes crude oil from which certain distillate fractions may have been removed, and crude oil to which certain distillate fractions may have been added.

Non-crude oil means any oil other than crude oil.

Prince William Sound means all State and Federal waters within Prince William Sound, Alaska, including the approach to Hinchinbrook Entrance out to and encompassing Seal Rocks.

§ 154.1120 Operating restrictions and interim operating authorization.

(a) The owner or operator of a TAPAA facility may not operate in Prince William Sound, Alaska, unless the requirements of this subpart as well as § 154.1025 have been met. The owner or operator of a TAPAA facility shall certify to the COTP that he or she has provided, through an oil spill removal organization required by § 154.1125, the necessary response resources to remove, to the maximum extend practicable, a worst case discharge or a discharge of 200,000 barrels of oil, whichever is grater, in Prince William Sound.

(b) Coast Guard approval of a TAPAA facility response plan is effective only so long as the appropriate Regional Citizens Advisory Council(s) is funded pursuant to the requirements of section 5002(k) of the Oil Pollution Act of 1990 (Pub. L. 101–380; 104 Stat. 484, 550).

§ 154.1125 Additional response plan requirements.

(a) The owner or operator of a TAPAA facility shall include the following information in the Prince William Sound appendix to the response plan required by subpart F of this part:

(1) *Oil spill removal organization*. Identification of an oil spill removal organization that shall—

(i) Perform response activities;

(ii) Provide oil spill removal and containment training, including training in the operation of prepositioned equipment for personnel, including local residents and fishermen, from the following locations in Prince William Sound:

(A) Valdez;

(B) Tatitlek;

(C) Cordova;

(D) Whittier;

(E) Chenega; and

(F) Fish hatcheries located at Port San Juan, Main Bay, Esther Island, Cannery Creek, and Solomon Gulch.

(iii) Provide a plan for training, in addition to the personnel listed in paragraph (a)(1)(ii) of this section, sufficient numbers of trained personnel to remove, to the maximum extent practicable, a worst case discharge; and

(iv) Address the responsibilities required in § 154.1035(b)(3)(iii).

(2) *Exercises*. Identification of exercise procedures that must—

(i) Provide for two exercises of the oil spill removal organization each year that test the ability of the prepositioned equipment and trained personnel required under this subpart to perform effectively;

(ii) Consist of both announced and unannounced drills; and

(iii) Include design(s) for exercises that test either the entire appendix or individual components(s).

(3) *Testing, inspection, and certification*. Identification of a testing, inspecting, and certification program for the prepositioned response equipment required in § 154.1130 that must provide for—

(i) Annual testing and equipment inspection in accordance with the manufacturer's recommended procedures, to include—

(A) Start-up and running under load all electrical motors, pumps, power packs, air compressors, internal combustion engines, and oil recovery devices; and

(B) Removal for inspection of no less than one-third of required boom from storage annually, such that all boom will have been removed and inspected within a period of 3 years; and

(ii) Records of equipment tests and inspection.

(iii) Use of an independent entity to certify that the equipment is on-site and in good operating condition and that required tests and inspection have been preformed. The independent entity must have appropriate training and expertise to provide this certification.

(4) *Prepositioned response equipment*. Identification and location of the prepositioned response equipment required in § 154.1130 including the make, model, and effective daily recovery rate of each oil recovery resource.

(b) The owner or operator of a TAPAA facility shall submit to the COTP a schedule for the training and drills required by the geographic-specific appendix for Prince William Sound for the following calendar year.

(c) All records required by this section must be available for inspection by the COTP.

§ 154.1130 Requirements for prepositioned response equipment.

The owner or operator of a TAPAA facility shall provide the following prepositioned response equipment, located within Prince William Sound, in addition to that required by § 154.1035, § 154.1045, or § 154.1050:

(a) On-water recovery equipment with a minimum effective daily recovery rate of 30,000 barrels capable of being a scene within 2 hours of notification of a discharge.

(b) On-water storage capacity of 100,000 barrels for recovered oily material capable of being on scene within 2 hours of notification of a discharge.

(c) On-water recovery equipment with a minimum effective daily recovery rate of 40,000 barrels capable of being on scene within 18 hours of notification of discharge.

(d) On-water storage capacity of 300,000 barrels for recovered oily material capable of being on scene within 12 hours of notification of a discharge.

(e) On-water recovery devices and storage equipment located in communities at strategic locations.

(f) Equipment as identified below, for the locations identified in § 154.1125(a)(1)(ii) sufficient for the protection of the environment in these locations:

(1) Boom appropriate for the specific locations.

(2) Sufficient boats to deploy boom and sorbents.

(3) Sorbent materials.

(4) Personnel protective clothing and equipment.

(5) Survival equipment.

(6) First aid supplies.

(7) Buckets, shovels, and various other tools.

(8) Decontamination equipment.

(9) Shoreline cleanup equipment.

(10) Mooring equipment.

(11) Anchored buoys at appropriate locations to facilitate the positioning of defensive boom.

(12) Other appropriate removal equipment for the protection of the environment as identified by the COTP.

§ 154.1135 Response plan development and evaluation criteria.

The following response times must be used in determining the on scene arrival time in Prince William Sound for the response resources required by § 154.1045:

	Tier 1 (hrs.)	Tier 2 (hrs.)	tier 3 (hrs.)
Prince William Sound Area	12	24	36

§ 154.1140 TAPAA facility contracting with a vessel.

The owner or operator of a TAPAA facility may contract with a vessel owner or operator to meet some of all of the requirements of subpart G of part 155 of this chapter. The extent to which these requirements are met by the contractual arrangement will be determined by the COTP.

Subpart H—Response Plans for Animal Fats and Vegetable Oils Facilities

SOURCE: CGD 91–036, 61 FR 7931, Feb. 29, 1996, unless otherwise noted.

§ 154.1210 Purpose and applicability.

(a) The requirements of this subpart are intended for use in developing response plans and identifying response resources during the planning process. They are not performance standards.

(b) This subpart establishes oil spill response planning requirements for an owner or operator of a facility that handles, stores, or transports animal fats or vegetable oils including—

(1) A fixed MTR facility capable of transferring oil in bulk, to or from a vessel with a capacity of 250 barrels or more; and

(2) A mobile MTR facility used or intended to be used to transfer oil to or from a vessel with a capacity of 250 barrels or more.

[USCG–1999–5149, 65 FR 40825, June 30, 2000]

§ 154.1216 Facility classification.

(a) The Coast Guard classifies facilities that handle, store, or transport animal fats or vegetable oils as ''substantial harm'' facilities because they may cause substantial harm to the environment by discharging oil.

(b) The COTP may change the classification of a facility that handles, stores, or transports animal fats or vegetable oils. The COTP may consider

the following factors, and any other relevant factors, before changing the classification of a facility:

(1) The type and quantity of oils handled.

(2) The spill history of the facility.

(3) The age of the facility.

(4) The public and commercial water supply intakes near the facility.

(5) The navigable waters near the facility. *Navigable waters* is defined in 33 CFR part 2.36.

(6) The fish, wildlife, and sensitive environments near the facility.

[USCG–1999–5149, 65 FR 40825, June 30, 2000, as amended by USCG–2008–0179, 73 FR 35014, June 19, 2008]

§ 154.1220 Response plan submission requirements.

(a) The owner or operator of an MTR facility identified in § 154.1216 as a substantial harm facility, shall prepare and submit to the cognizant COTP a response plan that complies with this subpart and all sections of subpart F of this part, as appropriate, except §§ 154.1015, 154.1016, 154.1017, 154.1028, 154.1045 and 154.1047.

(b) The owner or operator of an MTR facility classified by the COTP under § 154.1216(b) as a significant and substantial harm facility, shall prepare and submit for review and approval of the cognizant COTP a response plan that complies with this subpart and all sections of subpart F of this part, as appropriate, except §§ 154.1015, 154.1016, 154.1017, 154.1028, 154.1045 and 154.1047.

(c) In addition to the requirements in paragraph (a) of this section, the response plan for a mobile MTR facility must meet the requirements of § 154.1041 subpart F.

[USCG–1999–5149, 65 FR 40825, June 30, 2000]

§ 154.1225 Specific response plan development and evaluation criteria and other requirements for fixed facilities that handle, store, or transport animal fats or vegetable oils.

(a) The owner or operator of a fixed facility that handles, stores, or transports animal fats or vegetable oils must include information in the response plan that identifies—

(1) The procedures and strategies for responding to a worst case discharge and to an average most probable discharge of an animal fat or vegetable oil to the maximum extent practicable; and

(2) Sources of the equipment and supplies necessary to locate, recover, and mitigate such a discharge.

(b) The owner or operator of a fixed facility must ensure the equipment listed in the response plan will operate in the geographic area(s) where the facility operates. To determine if the equipment will operate, the owner or operator must—

(1) Use the criteria in Table 1 and Section 2 of appendix C of this part; and

(2) Consider the limitations in the area contingency plan for the COTP zone where the facility is located, including

(i) Ice conditions;

(ii) Debris;

(iii) Temperature ranges; and

(iv) Weather-related visibility.

(c) The owner or operator of a facility that handles, stores, or transports animal fats or vegetable oils must name the personnel and list the equipment, including those that are specified in § 154.1240, that are available by contract or by a method described in § 154.1228(a). The owner or operator is not required, but may at their option, refer to the tables in Environmental Protection Agency regulations, 40 CFR 112, Appendix E, Section 10.0, Tables 6 and 7, to determine necessary response resources.

(d) The owner or operator of a facility that handles, stores, or transports animal fats or vegetable oils must ensure that the response resources in paragraph (c) of this section are able to effectively respond to an incident within the amount of time indicated in the following table, unless otherwise specified in § 154.1240:

	Tier 1 (hrs.)	Tier 2	Tier 3
Higher volume port area.	6	N/A	N/A.
Great Lakes	12	N/A	N/A.
All other river and canal, inland, near-shore, and offshore areas.	12	N/A	N/A.

(e) The owner or operator of a facility that handles, stores, or transports animal fats or vegetable oils must—

(1) List in the plan the personnel and equipment that the owner or operator will use to fight fires.

(2) If there is not enough equipment or personnel located at the facility, arrange by contract or a method described in § 154.1228(a), or through a cooperative agreement with public firefighting resources, to have the necessary personnel and equipment available to fight fires.

(3) Identify an individual located at the facility who will work with the fire department on fires, involving an animal fat or vegetable oil. The individual—

(i) Verifies that there are enough trained personnel and operating equipment within a reasonable distance to the incident to fight fires.

(ii) Can be the qualified individual defined in § 154.1020 or an appropriate individual located at the facility.

(f) For a fixed facility, except for facilities that are part of a non-transportation-related fixed onshore facility with a storage capacity of less than 42,000 gallons, the owner or operator must also ensure and identify, through contract or a method described in § 154.1228, response resources for an average most probable discharge, including—

(1) At least 1,000 feet of containment boom or two times the length of the longest vessel that regularly conducts operations at the facility, whichever is greater, and the means of deploying and anchoring the boom within 1 hour of the discovery of an incident. Based on site-specific or facility-specific information, the COTP may require the facility owner or operator to make available additional quantities of containment boom within 1 hour of an incident;

(2) Adequate sorbent material located at the facility;

(3) Oil recovery devices and recovered oil storage capacity capable of being at the incident's site within 2 hours of the discovery of an incident; and

(4) Other appropriate equipment necessary to respond to an incident involving the type of oil handled.

(g) For a mobile facility or a fixed facility that is part of a non-transportation-related onshore facility with a storage capacity of less than 42,000 gallons, the owner or operator must meet the requirements of § 154.1041, and ensure and identify, through contract or a method described in § 154.1228, response resources for an average most probable discharge, including—

(1) At least 200 feet of containment boom and the means of deploying and anchoring the boom within 1 hour of the discovery of an incident. Based on site-specific or facility-specific information, the COTP may require the facility owner or operator to make available additional quantities of containment boom within 1 hour of the discovery of an incident;

(2) Adequate sorbent material capable of being at the site of an incident within 1 hour of its discovery;

(3) Oil recovery devices and recovered oil storage capacity capable of being at incident's site within 2 hours of the discovery of an incident; and

(4) Other equipment necessary to respond to an incident involving the type of oil handled.

(h) The response plan for a facility that is located in any environment with year-round preapproval for use of dispersants and that handles, stores, or transports animal fats and vegetables oils may request a credit for up to 25 percent of the worst case planning volume set forth by subpart F of this part. To receive this credit, the facility owner or operator must identify in the plan and ensure, by contract or other approved means as described in § 154.1228(a), the availability of specified resources to apply the dispersants and to monitor their effectiveness. The extent of the credit for dispersants will be based on the volumes of the dispersants available to sustain operations at the manufacturers' recommended dosage rates. Other spill mitigation techniques, including mechanical dispersal, may be identified in the response plan provided they are in accordance with the NCP and the applicable ACP. Resources identified for plan credit should be capable of being on scene within 12 hours of a discovery of a discharge. Identification of these resources does not imply that they will be authorized for use. Actual authorization for use during a spill response

will be governed by the provisions of the NCP and the applicable ACP.

[CGD 91–036, 61 FR 7931, Feb. 29, 1996, as amended by USCG–1999–5149, 65 FR 40826, June 30, 2000]

§ 154.1228 Methods of ensuring the availability of response resources by contract or other approved means.

(a) When required in this subpart, the availability of response resources must be ensured by the following methods:

(1) The identification of an oil spill removal organization with specified equipment and personnel available within stipulated response times in specified geographic areas. The organization must provide written consent to being identified in the plan;

(2) A document which—

(i) Identifies the personnel, equipment, and services capable of being provided by the oil spill removal organization within stipulated response times in the specified geographic areas;

(ii) Sets out the parties' acknowledgment that the oil spill removal organization intends to commit the resources in the event of a response;

(iii) Permits the Coast Guard to verify the availability of the identified response resources through tests, inspections, and drills;

(iv) Is referenced in the response plan;

(3) Active membership in a local or regional oil spill removal organization that has identified specified personnel and equipment required under this subpart that are available to response to a discharge within stipulated response times in the specified geographic areas;

(4) Certification by the facility owner or operator that specified personnel and equipment required under this subpart are owned, operated, or under the direct control of the facility owner or operator, and are available within stipulated response times in the specified geographic areas; or

(5) A written contractual agreement with an oil spill removal organization. The agreement must identify and ensure the availability of specified personnel and equipment required under this subpart within stipulated response times in the specified geographic areas.

(b) The contracts and documents required in paragraph (a) of this section must be retained at the facility and must be produced for review upon request by the COTP.

§ 154.1240 Specific requirements for animal fats and vegetable oils facilities that could reasonably be expected to cause substantial harm to the environment.

(a) The owner or operator of a facility, classified under § 154.1216 as a facility that could reasonably be expected to cause substantial harm to the environment, must submit a response plan that meets the requirements of § 154.1035, except as modified by this section.

(b) The plan does not need to list the facility or corporate organizational structure that the owner or operator will use to manage the response, as required by § 154.1035(b)(3)(iii).

(c) The owner or operator must ensure and identify, by contract or a method described in § 154.1228, that the response resources required under § 154.1035(b)(3)(iv) are available for a worst case discharge.

[USCG–1999–5149, 65 FR 40827, June 30, 2000]

Subpart I—Response Plans for Other Non-Petroleum Oil Facilities

SOURCE: CGD 91–036, 61 FR 7932, Feb. 29, 1996, unless otherwise noted.

§ 154.1310 Purpose and applicability.

This subpart establishes oil spill response planning requirements for an owner or operator of a facility that handles, stores, or transports other non-petroleum oils. The requirements of this subpart are intended for use in developing response plans and identifying response resources during the planning process. They are not performance standards.

§ 154.1320 Response plan submission requirements.

An owner or operator of a facility that handles, stores, or transports other non-petroleum oils shall submit a response plan in accordance with the requirements of this subpart, and with all sections of subpart F of this part,

except §§154.1045 and 154.1047, which apply to petroleum oils.

§ 154.1325 Response plan development and evaluation criteria for facilities that handle, store, or transport other non-petroleum oils.

(a) An owner or operator of a facility that handles, stores, or transports other non-petroleum oils must provide information in his or her plan that identifies—

(1) Procedures and strategies for responding to a worst case discharge of other non-petroleum oils to the maximum extent practicable; and

(2) Sources of the equipment and supplies necessary to locate, recover, and mitigate such a discharge.

(b) An owner or operator of a facility that handles, stores, or transports other non-petroleum oils must ensure that any equipment identified in a response plan is capable of operating in the conditions expected in the geographic area(s) in which the facility operates using the criteria in Table 1 of appendix C of this part. When evaluating the operability of equipment, the facility owner or operator must consider limitations that are identified in the ACPs for the COTP zone in which the facility is located, including—

(1) Ice conditions;

(2) Debris;

(3) Temperature ranges; and

(4) Weather-related visibility.

(c) The owner or operator of a facility that handles, stores, or transports other non-petroleum oils must identify the response resources that are available by contract or other approved means as described in §154.1028(a). The equipment identified in a response plan must include—

(1) Containment boom, sorbent boom, or other methods for containing oil floating on the surface or to protect shorelines from impact;

(2) Oil recovery devices appropriate for the type of other non-petroleum oils handled; and

(3) Other appropriate equipment necessary to respond to a discharge involving the type of oil handled.

(d) Response resources identified in a response plan under paragraph (c) of this section must be capable of commencing an effective on-scene response within the times specified in this paragraph for the applicable operating area:

	Tier 1 (hrs.)	Tier 2	Tier 3
Higher volume port area	6	N/A	N/A
Great Lakes	12	N/A	N/A
All other river and canal, inland, nearshore, and offshore areas	12	N/A	N/A

(e) A response plan for a facility that handles, stores, or transports other non-petroleum oils must identify response resources with firefighting capability. The owner or operator of a facility that does not have adequate firefighting resources located at the facility or that cannot rely on sufficient local firefighting resources must identify and ensure, by contract or other approved means as described in §154.1028(a), the availability of adequate firefighting resources. The response plan must also identify an individual located at the facility to work with the fire department on other non-petroleum oil fires. This individual shall also verify that sufficient well-trained firefighting resources are available within a reasonable response time to a worst case scenario. The individual may be the qualified individual as defined in §154.1020 and identified in the response plan or another appropriate individual located at the facility.

(f) The response plan for a facility that is located in any environment with year-round preapproval for use of dispersants and that handles, stores, or transports other non-petroleum oils may request a credit for up to 25 percent of the worst case planning volume set forth by subpart F of this part. To receive this credit, the facility owner or operator must identify in the plan and ensure, by contract or other approved means as described in §154.1028(a), the availability of specified resources to apply the dispersants and to monitor their effectiveness. The extent of the credit will be based on the volumes of the dispersant available to sustain operations at the manufacturers' recommended dosage rates. Identification of these resources does not imply that they will be authorized for use. Actual authorization for use during a spill response will be governed

by the provisions of the NCP and the applicable ACP.

Subparts J–O [Reserved]

Subpart P—Marine Vapor Control Systems

SOURCE: USCG–1999–5150, 78 FR 42618, July 16, 2013, unless otherwise noted.

GENERAL

§ 154.2000 Applicability.

(a) Except as specified by paragraphs (b) through (g) of this section, this subpart applies to—

(1) Each facility that controls vapors emitted to or from vessel cargo tanks;

(2) A vessel, other than a tank vessel, that has a vapor processing unit located onboard for recovery, destruction, or dispersion of vapors from a tank vessel's cargo tanks;

(3) Certifying entities that review, inspect, test, and certificate facility vapor control systems (VCSs); or

(4) A facility VCS that receives cargo vapor from a vessel when the VCS is connected to a facility's main VCS that serves plant processing areas, such as tank storage areas or tank truck or railcar loading areas, unrelated to tank vessel operations. The requirements of this subpart apply between the vessel vapor connection and the point where the VCS connects to the facility's main VCS.

(b) Each facility VCS that began operating on or after July 23, 1990, and that is certified as in compliance with 33 CFR part 154, subpart E on August 15, 2013, or each existing tank barge cleaning facility VCS that meets the safety Standards of Navigation and Vessel Inspection Circular No. 1–96, must comply with 33 CFR part 154, subpart P by August 15, 2016. Certifications, approvals of alternatives, and grants of exemption in effect on August 15, 2013, remain in effect after that date and as specified in the certification, approval, or grant.

(c) A facility with a Coast Guard-approved VCS operating prior to July 23, 1990, must comply with 33 CFR 154.2150 but otherwise need not comply with this subpart so long as it does not have any design or configuration alterations after its approval and receives cargo vapor only from the specific vessels for which it was originally approved.

(d) A facility that uses a vapor balancing system to transfer vapor from a railcar or a tank truck to a vessel cargo tank while offloading the vessel must obtain approval in writing from the Commandant and make that approval available for Coast Guard inspection upon request.

(e) A facility that transfers vapor from a facility tank to a cargo tank of a vessel which is not offloading cargo must obtain approval in writing from the Commandant and make that approval available for Coast Guard inspection upon request.

(f) A tank vessel that has a permanent or portable vapor processing unit located onboard must comply with applicable requirements of this subpart and 46 CFR part 39.

(g) This subpart does not apply to the collection of vapors of liquefied flammable gases as defined in 46 CFR 30.10–39.

(h) This subpart does not require a facility or a vessel to control vapor, or a vessel to take away vapor from facilities; however, if a facility operates a VCS to control vapor to or from vessels, the facility must comply with the requirements of this subpart.

(i) In this subpart, regulatory measurements, whether in the metric or English system, are sometimes followed by approximate equivalent measurements in parentheses, which are given solely for the reader's convenience. Regulatory compliance with the regulatory measurement is required.

§ 154.2001 Definitions.

As used in this subpart only:

Ambient temperature means the temperature of the environment in which an experiment is conducted or in which any physical or chemical event occurs.

Barge cargo connection means the point in a barge's cargo system where it connects with the hose assembly or loading arm used for cargo transfer.

Barge vapor connection means the point in a barge's piping system where it connects to a vapor collection hose or arm. This may be the same as the barge's cargo connection as it controls

vapors during barge cargo tank-cleaning operations.

Base loading means a method of inerting, enriching, or diluting such that sufficient inerting, enriching, or diluting gas, for the worst concentration of vapor coming from the vessel, is injected into the vapor line during the entire loading operation so that the vapor mixture is inerted, enriched, or diluted at the maximum loading rate. For inerting and enriching systems, ''worst concentration'' means the vapor stream contains no cargo vapor. For a diluting system, ''worst concentration'' means the vapor stream is saturated with cargo vapor.

Captain of the Port (COTP) means the Coast Guard Captain of the Port as defined in 33 CFR 154.105.

Certifying entity means an individual or organization accepted by the Commandant to review plans, data, and calculations for vapor control system designs and to conduct inspections and observe tests of vapor control system installations.

Cleaning operation means any stripping, gas-freeing, or tank-washing operation of a barge's cargo tanks conducted at a cleaning facility.

Combustible liquid means any liquid that has a flashpoint above 80 °F (as determined from an open-cup tester, as used to test burning oils) and includes Grade D and Grade E combustible liquids defined in 46 CFR 30.10–15.

Commandant means Commandant (CG–ENG), U.S. Coast Guard, 2100 2nd St. SW., Stop 7126, Washington, DC 20593–7126.

Detonation arrester means a device that is acceptable to the Commandant and includes a detonation arrester that is designed, built, and tested in accordance with Appendix A of this part or by another method acceptable to the Commandant for arresting flames and detonations.

Diluting means introducing a nonflammable, non-combustible, and nonreactive gas with the objective of reducing the hydrocarbon content of a vapor mixture to below the lower flammable limit so that it will not burn.

Drip leg means a section of piping that extends below piping grade to collect liquid passing through the vapor line and that has a diameter no more than the diameter of the pipe in which it is installed.

Elevated temperature means the temperature that exceeds 70 percent of the auto-ignition temperature, in degrees Celsius, of the vapors being collected.

Enriching means introducing a flammable gas with the objective of raising the hydrocarbon content of a vapor mixture above the upper flammable limit so that it will not burn.

Existing vapor control system means a vapor control system that satisfies the requirements of 33 CFR part 154, subpart E as certified by a certifying entity, or a tank barge cleaning facility vapor control system that meets the safety Standards of Navigation and Vessel Inspection Circular No. 1–96 as certified by a certifying entity or approved by the U.S. Coast Guard, and that began operating prior to August 15, 2013.

Facility main vapor control system means a vapor control system that primarily serves facility processing areas unrelated to tank vessel operations, such as the plant process, tank storage areas, or tank truck or railcar loading areas.

Facility operations manual means the manual required by 33 CFR 154.300, the contents of which are described in 33 CFR 154.310.

Facility vapor connection means the point in a facility's vapor collection system where it connects to a vapor collection hose or the base of a vapor collection arm and is located at the dock as close as possible to the tank vessel to minimize the length of the flexible vapor collection hose, thus reducing the hazards associated with the hose.

Fail-safe means a piece of equipment or instrument that is designed such that if any element should fail, it would go to a safe condition.

Fixed stripping line means a pipe extending to the low point of each cargo tank, welded through the deck and terminating above the deck with a valve plugged at the open end.

Flame arrester means a device that is designed, built, and tested in accordance with ASTM F 1273 or UL 525 (both incorporated by reference, see 33 CFR 154.106) for use in end-of-line applications for arresting flames.

Flame screen means a fitted single screen of corrosion-resistant wire of at least 30-by-30 mesh, or two fitted screens, both of corrosion-resistant wire, of at least 20-by-20 mesh, spaced apart not fewer than 12.7 millimeters (0.5 inch) or more than 38.1 millimeters (1.5 inches).

Flammable liquid means any liquid that gives off flammable vapors (as determined by flashpoint from an open-cup tester, as used to test burning oils) at or below a temperature of 80 °F, and includes Grades A, B, and C flammable liquids defined in 46 CFR 30.10–22.

Fluid displacement system means a system that removes vapors from a barge's cargo tanks during gas freeing through the addition of an inert gas or other medium into the cargo tank.

Fluid injection connection means the point in a fluid displacement system at which the fixed piping or hose that supplies the inert gas or other medium connects to a barge's cargo tanks or fixed piping system.

Gas freeing means the removal of vapors from a tank barge.

Grade A, B, C, D, or E means any Grade A, B, or C flammable liquid defined in 46 CFR 30.10–22 or any Grade D or E combustible liquid defined in 46 CFR 30.10–15.

High flash point cargoes means Grade E cargoes and cargoes having a closed-cup flash point higher than 60 °C (140 °F), carried at a temperature no higher than 5 °C (9 °F) below their flash points.

Inert condition or *inerted* means the oxygen content of the vapor space in a tank vessel's cargo tank is reduced to 60 percent or less by volume of the vapor's minimum oxygen concentration for combustion, or to 8 percent by volume or less for the vapor of crude oil, gasoline blends, or benzene, by addition of an inert gas, in accordance with the inert gas requirements of 46 CFR 32.53 or 46 CFR 153.500.

Inerting means introducing an inert gas into a tank and/or piping system to lower the oxygen content of a vapor mixture.

Line clearing means the transfer of residual cargo from a cargo loading line toward a cargo tank by using compressed inert gas.

Liquid knockout vessel means a device, other than a drip leg, used to separate liquid from vapor.

Maximum allowable gas-freeing rate means the maximum volumetric rate at which a barge may be gas-freed during cleaning operations.

Maximum allowable stripping rate means the maximum volumetric rate at which a barge may be stripped during cleaning operations prior to the opening of any hatch and/or fitting in the cargo tank being stripped.

Maximum allowable transfer rate means the maximum volumetric rate at which a vessel may receive cargo or ballast.

Minimum oxygen concentration for combustion or *MOCC* means the lowest level of oxygen in a vapor or a vapor mixture that will support combustion.

Multi-breasted barge-loading operations are those in which barges load side by side with the outboard barge's vapor collection system connected to a facility vapor connection through the inboard barge, as opposed to single-breasted operations involving a single barge, and may also be known as ''two barge, double-up'' loading operations.

Multiple facility vapor collection system junction means the point in the vapor collection system where two or more branch lines originating from separate facility vapor connections are connected.

New vapor control system means a vapor control system that is not an existing vapor control system.

Padding means introducing into a tank and associated piping system with an inert gas or liquid which separates the cargo from air, and maintaining the condition.

Partially inerted means the oxygen content of the vapor space in a tank is reduced to below what is normally present in the atmosphere by the addition of an inert gas such as nitrogen or carbon dioxide, but not to the concentration that meets the definition of ''inert condition or inerted'' in this section.

Pig means any device designed to maintain a tight seal within a cargo line while being propelled by compressed inert gas towards a cargo tank, for the purpose of transferring residual

cargo from the cargo loading line to the cargo tank.

Pigging means the transfer of residual cargo from a cargo loading line by using compressed inert gas to propel a ''pig'' through the line toward a cargo tank.

Pre-transfer conference means the conference required by 33 CFR 156.120(w).

Purging means introducing an inert gas into a tank and/or piping system to further reduce the existing hydrocarbon and/or oxygen content to a level below which combustion cannot be supported if air is subsequently introduced into the tank or piping system.

Stripping means the removal, to the maximum extent practicable, of cargo residue remaining in the barge's cargo tanks and associated fixed piping system after cargo transfer or during cleaning operations.

Tank barge cleaning facility or *TBCF* means a facility used or capable of being used to conduct cleaning operations on a tank barge.

Transfer facility means a facility as defined in 33 CFR 154.105, excluding tank barge cleaning or stripping facilities.

Vacuum displacement system means a system that removes vapors from a barge's cargo tanks during gas freeing by sweeping air through the cargo tank hatch openings.

Vapor balancing means the transfer of vapor displaced by incoming cargo from the tank of a vessel or facility receiving cargo into a tank of the vessel or facility delivering cargo via facility vapor collection system.

Vapor collection system means an arrangement of piping and hoses used to collect vapor emitted to or from a vessel's cargo tanks and to transport the vapor to a vapor processing unit or a tank.

Vapor control system or *VCS* means an arrangement of piping and equipment used to control vapor emissions collected to or from a vessel and includes the vapor collection system and the vapor processing unit or a tank.

Vapor destruction unit means a vapor processing unit that destroys cargo vapor by a thermal destruction method.

Vapor dispersion unit means a vapor processing unit that releases cargo vapor into the atmosphere through a venting system not located on the tank vessel.

Vapor processing unit means the components of a vapor control system that recover, destroy, or disperse vapor collected from a vessel.

Vapor recovery unit means a vapor processing unit that recovers cargo vapor by nondestructive means.

Vessel vapor connection means the point in a vessel's fixed vapor collection system where it connects to a vapor collection hose or arm.

CERTIFYING ENTITIES

§ 154.2010 Qualifications for acceptance as a certifying entity.

To qualify for acceptance as a vapor control system (VCS) certifying entity, the entity must demonstrate to the satisfaction of the Commandant that it possesses the following minimum qualifications:

(a) The ability to review and evaluate design drawings and failure analyses for compliance to this subpart;

(b) The knowledge of the applicable regulations of this subpart, including the standards incorporated by reference;

(c) The ability to monitor and evaluate test procedures and results for compliance with the operational requirements of this subpart;

(d) The ability to perform inspections and observe tests of bulk liquid cargo-handling systems;

(e) The applicant must not be controlled by an owner or operator of a vessel or facility engaged in controlling vapor emissions;

(f) The applicant must not be dependent upon Coast Guard acceptance under this section to remain in business; and

(g) The person in charge of VCS certification must be a licensed professional engineer in a U.S. State or territory by August 15, 2014.

§ 154.2011 Application for acceptance as a certifying entity.

(a) An applicant seeking Coast Guard acceptance as a certifying entity of vapor control systems (VCSs) must submit a signed, written application to the Commandant containing the information described in paragraph (b) of this section. The applicant's signature

certifies that the information in the application is true and that the applicant is not dependent upon Coast Guard acceptance under this section to remain in business and constitutes consent for the Coast Guard to verify any information contained in the application, through personal examination of persons named in the application, or otherwise. If an applicant knowingly and willfully provides any false statement or misrepresentation, or conceals a material fact in the application, the application may be denied or terminated, and the applicant may be subject to prosecution under the provisions of 18 U.S.C. 1001.

(b) An application must include the following general information:

(1) The name and address of the applicant, including subsidiaries and divisions if applicable;

(2) A description of the experience and qualifications of any person who would review or test systems on behalf of the applicant, showing that the person is familiar with or otherwise qualified to implement Coast Guard VCS regulations; and

(3) A letter from a facility owner or operator stating his or her intent to use the services of the applicant to certify VCS installations.

(c) The Commandant reviews each application and either issues a letter of acceptance as a certifying entity to the applicant, or notifies the applicant that it is not accepted, and maintains a list of currently accepted certifying entities that is available to the public at *http://homeport.uscg.mil*.

(d) The acceptance of a certifying entity may be terminated by the Commandant for failure to review, inspect, or test a system properly in accordance with this subpart.

(e) A certifying entity may not certify a facility VCS if that certifying entity was involved in the design or installation of the system. ''Design or installation'' includes, but is not limited to—

(1) Performing system design calculations;

(2) Providing chemical data;

(3) Developing plans, specifications, and drawings;

(4) Conducting failure analysis; and

(5) Installing systems or components.

(f) A certifying entity may not recertify a VCS design, configuration, or operational change if it was involved in that change, and may not conduct an operational review of a VCS if it has been involved in the design, installation, or operation of the VCS.

(g) A certifying entity may not conduct the failure analysis of a facility VCS it is certifying. The certifying entity may only point out shortcomings shown by the failure analysis and may not propose changes to correct the shortcomings.

(h) A certifying entity may not certify the VCS of any vessel or facility owner or operator that owns or has a controlling interest in the certifying entity.

CERTIFICATION, RECERTIFICATION, AND OPERATIONAL REVIEW

§ 154.2020 Certification and recertification—owner/operator responsibilities.

(a) Prior to operating, a new vapor control system (VCS) installation must be certified under 33 CFR 154.2023 by a certifying entity as meeting the requirements of this subpart.

(b) A certified VCS or a Coast Guard-approved VCS that was operating prior to July 23, 1990 must be recertified by a certifying entity under 33 CFR 154.2023 before it can—

(1) Control vapors other than those for which it was originally certified;

(2) Receive vapors from vessels other than those for which it was approved, if the VCS was in operation prior to July 23, 1990;

(3) Operate under any changed design or configuration;

(4) Operate as part of multi-breasted barge-loading operations, if the VCS was not originally approved or certified for such operations; or

(5) Be connected to a tank vessel if a pigging system is used to clear cargo in the cargo line back to the tank vessel.

(c) For a transfer facility, prior to operating a VCS to control vapor from a tank vessel during cargo loading line pigging to clear cargo in the cargo loading line back to the tank vessel, the cargo loading line pigging system must be reviewed by a certifying entity as meeting the requirements of 33 CFR 154.2104.

(d) To apply for certification, the owner or operator of a facility VCS must submit plans, calculations, specifications, and other related information, including a qualitative failure analysis, to the certifying entity. Suggested, but not mandatory, guidance for preparing a qualitative failure analysis can be found in the American Institute of Chemical Engineers publication ''Guidelines for Hazard Evaluation Procedures,'' and in Military Standard MIL–STD–882B for a quantitative failure analysis. For assistance in locating those publications, contact the Coast Guard, Office of Design and Engineering Standards (CG–ENG), 2100 2nd Street SW., Stop 7126, Washington, DC 20593–7126, telephone 202–372–1418 or via email at *Hazmatstandards@uscg.mil*. The analysis must demonstrate that—

(1) The VCS can operate continuously and safely while controlling cargo vapors to or from tankships or tank barges over the full range of transfer rates expected at the facility;

(2) The VCS has the proper alarms and automatic shutdown systems required by this subpart to prevent an unsafe operation;

(3) The VCS has sufficient automatic or passive devices to minimize damage to personnel, property, and the environment if an accident were to occur;

(4) If a quantitative failure analysis is also conducted, the level of safety attained is at least one order of magnitude greater than that calculated for operating without a VCS; and

(5) If a facility uses a cargo line pigging system to clear cargo in the cargo line back to the tank vessel with the VCS connected, the qualitative failure analysis must demonstrate that the cargo line pigging system has at least the same levels of safety required by paragraphs (d)(1), (2), and (3) of this section to prevent overpressure of the vessel's cargo tanks and account for the probability that the pig is destroyed during line-pigging operations.

(e) The VCS owner or operator must maintain at the facility—

(1) A copy of VCS design documentation, including plans, drawings, calculations, and specifications for the VCS;

(2) The facility operations manual, including the list of cargoes that the facility is approved to vapor control;

(3) Any certification or recertification letter issued under 33 CFR 154.2023; and

(4) Other records as required by 33 CFR 154.740.

§ 154.2021 Operational review—owner/operator responsibilities.

(a) Each facility vapor control system (VCS) must undergo an operational review by a certifying entity within five years of its initial certification or last operational review, to ensure its proper operation and maintenance.

(b) The VCS owner or operator must coordinate with the certifying entity and provide the entity with all necessary documentation and records to conduct the operational review.

(c) The VCS owner or operator must notify the Captain of the Port (COTP) of a scheduled operational review. The COTP, at his or her discretion, may observe the operational review.

(d) The VCS owner or operator must maintain, at the facility, the latest operational review letter issued under 33 CFR 154.2023.

§ 154.2022 Certification, recertification, or operational review—certifying entity responsibilities, generally.

Before the initial certification of a facility vapor control system (VCS), the certifying entity must perform each of the tasks specified in this section.

(a) Review all VCS design documentation, including plans, drawings, calculations, specifications, and failure analysis, to ensure that the VCS design meets the requirements of this subpart.

(b) Conduct an initial onsite inspection to ensure that the VCS installation conforms to the VCS plans, drawings, and specifications reviewed.

(c) Conduct onsite reviews and observe tests to ensure the VCS's proper operation in accordance with its design and compliance with applicable regulations and the facility's operations manual and to ensure that—

(1) Each alarm and shutdown shown on the piping and instrumentation diagrams (P&IDs) and reviewed in the hazard analysis as part of the system responds properly, through simulation of emergency conditions to activate the alarm or shutdown;

(2) Maximum vacuum cannot be exceeded at the maximum operating conditions of any vapor-moving device, through testing of the vacuum breaker;

(3) VCS shutdown occurs correctly, through the startup of the VCS and tripping of each shutdown loop while the VCS is not connected to a vessel;

(4) VCS startup, normal operation, and shutdown occur properly, through observing the relevant portions of a test loading or unloading of one vessel, or a test cleaning of one tank barge at a tank barge cleaning facility; and that

(5) The automatic liquid block valve successfully stops flow of liquid to the vessel during a system shutdown, through observing the relevant portions of a test loading or test cargo tank cleaning.

(d) Review, for each cargo vapor the VCS will control, the cargo's chemical data and the VCS design to ensure that—

(1) Each vapor-controlled chemical is either specified in writing by the Commandant or listed in 46 CFR 30.25–1, 46 CFR 151.05, or Table 1 or Table 2 of 46 CFR 153;

(2) Each chemical's maximum experimental safe gap, minimum oxygen concentration for combustion (MOCC), and upper and lower limits of flammability have been correctly determined (this may but need not be in compliance with Coast Guard guidance available at *http://homeport.uscg.mil*);

(3) Vapor properties and characteristics are addressed, including freezing point, polymerization potential, solubility, and cargo compatibility;

(4) The flash point for any cargo with a closed-cup flash point of 60 °C (140 °F) or higher is properly determined;

(5) The cargo's vapor growth rate has been correctly determined and the VCS complies with 33 CFR 154.2103(a) and (b) or 33 CFR 154.2203(a) or (b);

(6) Each detonation arrester used in the VCS is correct for each chemical's maximum experimental safe gap;

(7) Setpoints for each oxygen analyzer used in the VCS are correct for each chemical's MOCC;

(8) Setpoints for each oxygen or hydrocarbon analyzer used in the VCS are correct for each chemical's upper or lower flammability limit;

(9) The inerting, enriching, or dilution system used is adequate;

(10) Each vapor-controlled chemical is compatible with all VCS components and with other chemicals and with inerting, enriching, or diluting gases added to the VCS per 46 CFR part 150, Table I and Table II;

(11) The VCS's mechanical equipment and system are suitable;

(12) The VCS's vapor recovery or destruction unit has adequate capacity and is safe for each chemical;

(13) Any calculation to determine the duration of purging required by 33 CFR 154.2150(p) is correct; and that

(14) The VCS's failure analysis addresses any hazards presented with each chemical.

(e) Review the VCS prior to certifying it to control vapors from barge cargo tanks during multi-breasted barge loading operations, to confirm that—

(1) The overfill control system required by 33 CFR 154.2102 will process a liquid overfill condition within any one cargo tank on each barge;

(2) If multi-breasted loading is conducted using more than one liquid transfer hose from the shore facility, the facility is capable of activating the emergency shutdown system required by 33 CFR 154.550, and can automatically stop the cargo flow to each transfer hose simultaneously, in the event an upset condition occurs that closes the remotely operated cargo vapor shutoff valve required by 33 CFR 154.2101(a);

(3) The facility operations manual has been modified to include the procedures for multi-breasted barge-loading operations; and

(4) The facility operations manual describes how to make proper connections, on the facility side, between the alarm and shutdown systems of the VCS and of each barge being loaded.

(f) Review a cargo line pigging system that will be used to clear cargo in

the cargo line back to a tank vessel for compliance with 33 CFR 154.2104.

(g) Review the facility operations manual for compliance with 33 CFR 154.310(b).

(h) Review any test program used for instrument testing and calibration for compliance with 33 CFR 154.2180 and 33 CFR 154.2181.

(i) Review the facility's VCS training program for compliance with 33 CFR 154.2030 and 154.2031.

§ 154.2023 Recertification—certifying entity responsibilities, generally.

(a) Before the recertification of a facility vapor control system (VCS) the certifying entity must perform the reviews specified in 33 CFR 154.2022, except paragraphs (a) through (c).

(b) The certifying entity must review, inspect, and observe tests of a facility VCS's design or configuration alteration before recertifying a VCS that was certified or approved for operation prior to July 23, 1990, to ensure that the altered system complies with applicable regulations. In general, the certifying entity should perform the review, inspection, and observe tests as specified in 33 CFR 154.2022(a) through (c). However, depending on the extent of the alteration, the review, inspection, or test observing may not need to be as comprehensive as those for an initial certification.

§ 154.2024 Operational review—certifying entity responsibilities, generally.

In conducting an operational review the certifying entity must ensure that the vapor control system (VCS) is properly operating and maintained by performing the tasks specified in this section.

(a) Ensure the completeness, currency, and accuracy of the facility operations manual, training plans, and VCS test procedures.

(b) Confirm through training records that the current listed available facility persons in charge have been trained in compliance with 33 CFR 154.2030 or 154.2031.

(c) Confirm that recordkeeping and testing and inspection comply with 33 CFR 154.740 and 156.170.

(d) Verify that there has been no change to the VCS equipment or instrumentation since the last certification, recertification, or operational review to ensure that the certification letter is current.

(e) Verify proper marking, labeling, maintenance, and operation of VCS components, through visual inspection.

(f) Confirm that the originally certified liquid cargo transfer rate can still be attained in compliance with 33 CFR 154.2103 and 154.2107.

(g) Ensure that cargo transfer or tank-cleaning barge operational procedures are properly followed and the VCS operates properly, through observation of the initial stages of transfer or cleaning, including 24-hour pre-transfer tests required by 33 CFR 154.2150(b) or 33 CFR 154.2250(b), the pre-transfer conference, and initial system startup procedures.

§ 154.2025 Certification, recertification, or operational review—certifying entity documentation.

(a) If the certifying entity is satisfied that the facility's vapor control system (VCS) has successfully undergone the reviews, inspections, and tests required by 33 CFR 154.2022(a) for certification or recertification, and that the VCS will operate properly and safely, the certifying entity must certify or recertify the VCS by issuing a certification letter to the facility owner or operator, and by sending copies of the letter to the Captain of the Port (COTP) and the Commandant. The certification letter must refer by date to the certifying entity's letter of acceptance issued under 33 CFR 154.2011(c), and must—

(1) State that the facility complies with applicable regulations and with its operations manual, and list any exemptions to the applicable regulations that have been approved by the Coast Guard;

(2) Report on all reviews, inspections, and tests undergone by the VCS in accordance with 33 CFR 154.2022(a);

(3) List all plans and drawings that were reviewed by the certifying entity;

(4) State if the VCS may control vapors from tank barges that are required to have a shore-side, explosion-proof receptacle or an overfill control

system required by 33 CFR 154.2102(a) and (b); and

(5) List all cargoes that the certifying entity approves for control by the VCS.

(b) If the certifying entity is satisfied that the facility's VCS has successfully undergone the operational review required by 33 CFR 154.2022(b), the certifying entity must issue an operational review letter to the facility owner or operator, and send copies of the letter to the COTP and the Commandant. The operational review letter must—

(1) List each item reviewed and inspected;

(2) Describe the transfer or cleaning operation observed; and

(3) Summarize the review's results.

PERSONNEL

§ 154.2030 Transfer facilities.

(a) Personnel in charge of a transfer operation using a vapor control system (VCS) must have completed a training program covering the particular VCS installed at the facility. As part of the training program, personnel must be able to demonstrate, through drills and display of practical knowledge, the proper VCS operational procedures for normal and emergency conditions. The training program must cover the following subjects:

(1) Purpose of the VCS;

(2) Principles of the VCS;

(3) Components of the VCS;

(4) Hazards associated with the VCS;

(5) Coast Guard regulations in this subpart;

(6) Operating procedures, including:

(i) Transfer, testing, and inspection requirements;

(ii) Pre-transfer procedures;

(iii) Chemicals approved for collection;

(iv) Material safety data sheet review;

(v) Connection procedures;

(vi) Startup procedures;

(vii) Normal operating conditions and how to handle deviations from normal conditions;

(viii) Normal shutdown procedures; and

(ix) Operating procedures for cargo line clearing if a cargo line clearance system is installed in accordance with 33 CFR 154.2104; and

(7) Emergency procedures.

(b) Personnel overseeing VCS maintenance must be familiar with—

(1) Inspection of detonation arresters; and

(2) Procedures for equipment and instrumentation testing required by 33 CFR 156.170(g).

(c) Facility personnel in charge of a transfer operation using a VCS must be designated and qualified in compliance with 33 CFR 154.710 and the facility must maintain the training documentation required by 33 CFR 154.740(b).

§ 154.2031 Tank barge cleaning facilities.

(a) In addition to complying with 33 CFR 154.2030, a tank barge cleaning facility (TBCF) person-in-charge (PIC) of a barge cargo tank-cleaning operation that uses a vapor control system (VCS) must complete a training program covering the particular systems installed at the facility and on the barge. As part of the training program, personnel must be able to demonstrate, through drills and practical knowledge, the proper VCS operation procedures for normal and emergency conditions. The training program must—

(1) Satisfy the requirements of 33 CFR 154.2030(a)(1) through (7), except (a)(6)(i), (ii), and (ix), and 33 CFR 154.2030(b) and cover—

(i) Purpose, principles, components, and hazards associated with stripping and gas-freeing;

(ii) Special hazards associated with the accumulation and discharge of static electricity; and

(iii) Operating procedures, including cleaning, testing, and inspection requirements; pre-cleaning procedures; and safeguards to prevent static electricity discharge.

(b) In addition to the requirements contained in 33 CFR 154.710, no person may serve, and the facility operator may not use the services of anyone, as a facility PIC of a cleaning operation unless the person has been properly trained and certified by the facility with a minimum of 60 hours of experience in cleaning operations.

TRANSFER FACILITIES—VCS DESIGN AND INSTALLATION

§ 154.2100 Vapor control system, general.

(a) Vapor control system (VCS) design and installation must eliminate potential overpressure and vacuum hazards, overfill hazards, sources of ignition, and mechanical damage to the maximum practicable extent. Each remaining hazard source that is not eliminated must be specifically addressed in the protection system design and system operational requirements.

(b) Vapor collection system pipe and fitting components must be in accordance with ANSI B31.3 (incorporated by reference, see 33 CFR 154.106) with a maximum allowable working pressure (MAWP) of at least 150 pounds per square inch gauge (psig). Valves must be in accordance with ASME B16.34, 150 pound class (incorporated by reference, see 33 CFR 154.106). Flanges must be in accordance with ANSI B16.5 or ANSI B16.24, 150 pound class (both incorporated by reference, see 33 CFR 154.106). The following components and their associated equipment do not have a minimum specified MAWP, but must be constructed to acceptable engineering standards and have the appropriate mechanical strength to serve the intended purpose: knockout drums, liquid seals, blowers/compressors, flare stacks/incinerators, and other vapor processing units.

(c) All VCS electrical equipment must comply with NFPA 70 (2011) (incorporated by reference, see 33 CFR 154.106).

(d) Any pressure, flow, or concentration indication required by this part must provide a remote indicator on the facility where the cargo transfer system and VCS are controlled, unless the local indicator is clearly visible and readable from the operator's normal position at the control stations.

(e) Any condition requiring an alarm as specified in this part must activate an audible and visible alarm where the cargo transfer and VCSs are controlled.

(f) For a VCS installed after August 15, 2013, an alarm or shutdown must be activated if electrical continuity of an alarm or shutdown sensor required by this subpart is lost.

(g) The VCS piping surface temperature must not exceed 177 °C (350 °F) or 70 percent of the auto-ignition temperature in degrees Celsius of the vapors being transferred, whichever is lower, during normal operations. This must be achieved by either separating or insulating the entire VCS from external heat sources.

(h) The VCS must be equipped with a mechanism to eliminate any liquid condensate from the vapor collection system that carries over from the vessel or condenses as a result of an enrichment process.

(1) If a liquid knockout vessel is installed to eliminate any liquid condensate, it must have—

(i) A mechanism to indicate the level of liquid in the device;

(ii) A high liquid level sensor that activates an alarm, meeting the requirements of paragraph (e) of this section;

(iii) A high-high liquid level sensor that closes the remotely operated cargo vapor shutoff valve required by 33 CFR 154.2101(a), and shuts down any vapor-moving devices before carrying liquid over from the vessel to the vapor-moving device. One sensor with two stages may accomplish both this requirement and the requirement of paragraph (h)(1)(ii) of this section; and

(2) If a drip leg is used to eliminate any liquid condensate, it must be fitted with a mechanism to remove liquid from the low point.

(i) Vapor collection piping must be electrically grounded and must be electrically continuous.

(j) If the facility handles inerted vapors of cargoes containing sulfur, the facility must control heating from pyrophoric iron sulfide deposits in the vapor collection line.

(k) All VCS equipment and components, including piping, hoses, valves, flanges, fittings, and gaskets, must be suitable for use with the vapor in the VCS.

§ 154.2101 Requirements for facility vapor connections.

(a) A remotely operated cargo vapor shutoff valve must be installed in the vapor collection line between the facility vapor connection and the nearest point where any inerting, enriching, or diluting gas is introduced into the

vapor collection line, or where a detonation arrester is fitted. The valve must—

(1) Close within 30 seconds after detection of a shutdown condition of any component required by this subpart;

(2) Close automatically if the control signal or electrical power to the system is interrupted;

(3) Activate an alarm meeting 33 CFR 154.2100(e) when a signal to shut down is received from a component;

(4) Be capable of manual operation or manual activation;

(5) Have a local valve position indicator, or be designed so that the valve position can be readily determined from the valve handle or valve stem position; and

(6) If the valve seat is fitted with resilient material, be a Category A valve as defined by 46 CFR 56.20–15 and not allow appreciable leakage when the resilient material is damaged or destroyed.

(b) Except when a vapor collection arm is used, the first 1 meter (3.3 feet) of vapor piping downstream of the facility vapor connection must be—

(1) Painted in the sequence of red/yellow/red. The width of the red bands must be 0.1 meter (0.33 foot) and the width of the middle yellow band must be 0.8 meter (2.64 feet); and

(2) Labeled with the word ''VAPOR'' painted in black letters at least 50.8 millimeters (2 inches) high.

(c) Each facility vapor connection flange face must have a permanent stud projecting outward that is 12.7 millimeters (0.5 inch) in diameter and is at least 25.4 millimeters (1 inch) long. The stud must be located at the top of the flange face, midway between boltholes, and in line with the bolthole pattern.

(d) Each hose that transfers vapors must—

(1) Have a design burst pressure of at least 25 pounds per square inch gauge (psig);

(2) Have a maximum allowable working pressure no less than 5 psig;

(3) Be capable of withstanding at least a 2 pounds per square inch (psi) vacuum without collapsing or constricting;

(4) Be electrically continuous with a maximum resistance of 10,000 ohms;

(5) Have flanges with—

(i) A bolthole arrangement complying with the requirements for 150 pound class flanges, ANSI B16.5 (incorporated by reference, see 33 CFR 154.106); and

(ii) One or more 15.9 millimeter (0.625 inch) diameter holes in the flange face, located midway between boltholes, and in line with the bolthole pattern;

(6) Be resistant to abrasion and kinking;

(7) Be compatible with vapors being controlled; and

(8) Have the last 1 meter (3.3 feet) of each end of the vapor hose marked in accordance with paragraph (b) of this section.

(e) Vapor hoses must be adequately supported to prevent kinking, collapse, or contact with any metal of the vessel or facility to prevent unintentional electrical bypassing of the insulating flange or the single length of non-conducting hose required by paragraph (g) of this section.

(f) Fixed vapor collection arms must—

(1) Meet the requirements of paragraphs (d)(1) through (5) of this section; and

(2) Have the last 1 meter (3.3 feet) of the arm marked in accordance with paragraph (b) of this section.

(g) The facility vapor connection must be electrically insulated from the vessel vapor connection in accordance with OCIMF ISGOTT section 17.5 (incorporated by reference, see 33 CFR 154.106). In order to prevent electrical arcing during connection and disconnection of the transfer hose/arm, the transfer hose/arm must be fitted with an insulating flange or a single length of non-conducting hose to ensure electrical discontinuity between the vessel and facility. The insulating flange/hose should be inserted at the jetty end and must not be electrically bypassed. The installation, inspection, and testing of the insulating flange/hose must be in accordance with 46 CFR 35.35–4. For each vapor hose, only one insulting flange or non-conductive hose must be provided. See 46 CFR 35.35–4.

(h) A vapor collection system, fitted with a gas injection system that operates at a positive gauge pressure at the

facility vapor connection, must be fitted with a means to prevent backflow of vapor to the vessel's vapor collection system during loading.

(i) Electrical bonding between vessel and shore must be in accordance with 46 CFR 35.35–.5.

§ 154.2102 Facility requirements for vessel liquid overfill protection.

This section does not apply to facilities collecting vapors emitted from vessel cargo tanks while inerting, padding, or purging the cargo tanks with an inert gas and not loading cargo into the cargo tank.

(a) Each facility that receives cargo vapor from a tank barge that is fitted with overfill protection, in accordance with 46 CFR 39.2009(a)(1)(iii), must provide a 120-volt, 20-amp explosion-proof receptacle for the overfill protection system that meets—

(1) ANSI NEMA WD–6 (incorporated by reference, see 33 CFR 154.106);

(2) NFPA 70 (2011), Articles 406.9 and 501.145 (incorporated by reference, see 33 CFR 154.106); and

(3) 46 CFR 111.105–9.

(b) Each facility that receives cargo vapor from a tank barge that is fitted with an intrinsically safe cargo tank level sensor system complying with 46 CFR 39.2009(a)(2), as a means of overfill protection, must have an overfill control system on the dock capable of powering and receiving an alarm and shutdown signal from the cargo tank level sensor system that—

(1) Closes the remotely operated cargo vapor shutoff valve required by 33 CFR 154.2101(a) and activates the emergency shutdown system required by 33 CFR 154.550 when—

(i) A tank overfill signal is received from the barge; or

(ii) Electrical continuity of the cargo tank level sensor system is interrupted;

(2) Activates an audible and visible alarm that warns barge and facility personnel when a tank overfill signal, or an optional high-level signal corresponding to a liquid level lower than the tank overfill sensor setting, is received from the barge;

(3) Has a mechanism to test the alarms and automatic shutdown systems electrically and mechanically before operating the vapor control system (VCS);

(4) Has suitable means, such as approved intrinsic safety barriers able to accept passive devices, so that the overfill and optional alarm circuits on the barge side of the overfill control system, including cabling, normally closed switches, and pin and sleeve connectors, are intrinsically safe;

(5) Is labeled at the dock with the maximum allowable inductance (in millihenrys) and capacitance (in microfarads) to be connected to the facility overfill protection system as specified by the equipment manufacturer; and

(6) Has a female connecting plug for the tank barge level sensor system with a five-wire, 16-ampere connector body meeting IEC 60309–1 and IEC 60309–2 (both incorporated by reference, see 33 CFR 154.106), that is—

(i) Configured with pins S2 (N) and R1 (L3) for the tank overfill sensor circuit, pin G connected to the cabling shield, and pins N (L2) and T3 (L1) reserved for an optional high-level alarm connection;

(ii) Labeled ''Connector for Barge Overfill Control System''; and

(iii) Connected to the overfill control system by a shielded flexible cable.

§ 154.2103 Facility requirements for vessel vapor overpressure and vacuum protection.

In this section, the requirements of having a flame arrester or a flame screen at the opening of a pressure relief valve or a vacuum relief valve apply only to facilities collecting vapors of flammable, combustible, or non-high flash point liquid cargoes.

(a) A facility's vapor control system (VCS) must have the capacity for collecting cargo vapor at a rate of not less than the facility's maximum liquid transfer rate for cargoes that are vapor controlled plus the vapor growth for the cargoes and any inerting, diluting, or enriching gas that may be added to the system. Vapor growth must be considered as 25 percent of the cargo's saturated vapor pressure in pounds per square inch absolute (psia) at 115 °F, divided by 12.5 psia (the vapor pressure of gasoline at 115 °F), times the facility's maximum liquid transfer rate, unless there is experimental data for

actual vapor growth for turbulent transferring under the most severe conditions for vapor growth. If the cargo is transferred at temperatures above 115 °F, the cargo's true vapor pressure (in psia) at the transferring temperature must be used when determining the vapor growth.

(b) A facility VCS must be designed to prevent the pressure in a vessel's cargo tanks from going below 80 percent of the highest setting of any of the vessel's vacuum relief valves or exceeding 80 percent of the lowest setting of any of the vessel's pressure relief valves for a non-inerted tank vessel. A facility VCS also must be designed to prevent the pressure in a vessel's cargo tanks from going below 0.2 pounds per square inch gauge (psig) or exceeding 80 percent of the lowest setting of any of the vessel's pressure relief valves for an inerted tank vessel. The system must sustain the pressure in the vessel's cargo tanks within this range at any cargo transfer rate less than or equal to the maximum transfer rate determined at the pre-transfer conference.

(c) The pressure measured at the facility vapor connection must be corrected for pressure drops across the vessel's vapor collection system, vapor collection hose or arm, and vapor line up to the location of the pressure sensor.

(d) The facility vapor connection must have a pressure-sensing device that meets the installation requirements of paragraph (h) of this section, which activates an alarm that meets 33 CFR 154.2100(e) when the pressure at the facility vapor connection exceeds either—

(1) The pressure corresponding to the upper pressure determined in paragraph (b) of this section; or

(2) A lower pressure agreed upon at the pre-transfer conference.

(e) If a facility draws vapor from a vessel with a vapor-moving device, the facility vapor connection must have a pressure-sensing device, which activates an alarm meeting 33 CFR 154.2100(e) when the pressure at the facility vapor connection falls below either—

(1) The pressure corresponding to the lower pressure determined in paragraph (b) of this section; or

(2) A higher pressure agreed upon at the pre-transfer conference.

(f) The facility vapor connection must have a pressure-sensing device, independent of the device used to activate the alarm required by paragraph (d) of this section, meeting the installation requirements of paragraph (h) of this section, which activates the emergency shutdown system required by 33 CFR 154.550 when the pressure at the facility vapor connection exceeds the lower of the following:

(1) A pressure corresponding to 90 percent of the vessel's lowest pressure relief valve setting, corrected for pressure drops across the vessel's vapor collection system, the vapor collection hose or arm, and any vapor line up to the point where the pressure sensor is located;

(2) A pressure corresponding to 90 percent of the setting of the pressure relief valve at the facility vapor connection, if the facility vapor connection is installed with a pressure relief valve; or

(3) A lower pressure than the pressure in paragraphs (f)(1) and (f)(2) of this section that is agreed upon at the pre-transfer conference.

(g) If a facility draws vapors from a vessel with a vapor-moving device, the facility vapor connection must have a pressure-sensing device, independent of the device used to activate the alarm required by paragraph (e) of this section, which closes the remotely operated cargo vapor shutoff valve required by 33 CFR 154.2101(a) when the vacuum at the facility vapor connection is more than the higher (lesser vacuum) of the following:

(1) A vacuum corresponding to 90 percent of the vessel's highest vacuum relief valve setting;

(2) A vacuum corresponding to 90 percent of the setting of the vacuum relief valve at the facility vapor connection, if the facility vapor connection is installed with a vacuum relief valve; or

(3) A lesser vacuum than the vacuum in paragraphs (g)(1) and (g)(2) of this section that is agreed upon at the pre-transfer conference.

(h) The pressure-sensing devices required by paragraphs (d) and (f) of this section must be located in the vapor

collection line between the facility vapor connection and the following:

(1) Any isolation valve, unless an interlock is provided that prevents operation of the system when the isolation valve is closed; and

(2) Any components that could plug and cause a blockage in the vapor line.

(i) A pressure-indicating device must be provided that displays the pressure in the vapor collection line between the facility vapor connection and any isolation valve or any devices which could cause a blockage in the vapor line.

(j) If a facility draws vapor from the vessel with a vapor-moving device capable of drawing more than 1 pound per square inch (psi) vacuum, a vacuum relief valve must be installed in the vapor collection line between the vapor-moving device and the facility vapor connection, which—

(1) Relieves at a predetermined pressure such that the pressure at the facility vapor connection is maintained at −1.0 psig (1.0 psig vacuum) or less vacuum;

(2) Has a relieving capacity equal to or greater than the capacity of the vapor-moving device;

(3) Has a flame arrester or flame screen fitted at the vacuum relief opening; and

(4) Has been tested for relieving capacity in accordance with paragraph 1.5.1.3 of API 2000 (incorporated by reference, see 33 CFR 154.106) with a flame arrester or flame screen fitted.

(k) When a facility collects cargo vapor through an extensive length of vapor piping, such as an undersea pipeline from a vessel moored offshore, before reaching the first pressure sensor and vacuum relief valve, the vacuum relief valve may be set at a vacuum greater than 1 psi vacuum, provided the pressure controls take into account the pressure drop across the vessel's vapor collection system, any vapor collection hoses, and the vapor piping as a function of the actual transfer rate.

(l) If the pressure in the vapor collection system can exceed 1.5 psig during a malfunction of a pressure regulator or control valve in an inerting, enriching, or diluting system, a pressure relief valve must—

(1) Be located between where the inerting, enriching, or diluting gas is introduced into the vapor collection system and the facility vapor connection;

(2) Relieve at the higher of the following two pressures:

(i) A pressure such that the pressure at the facility vapor connection does not exceed 1.5 psig; or

(ii) The lowest pressure relief valve setting of vessels that control vapors at the facility;

(3) Have a relieving capacity equal to or greater than the maximum capacity of the facility inerting, enriching, or diluting gas source flowing through the failed pressure regulator or control valve, taking into account the pressure drops across any flame arrester or discharge piping fitted at the relief valve's discharge;

(4) Have a flame arrester or flame screen fitted at the discharge opening, if the design does not secure a minimum vapor discharge velocity of 30 meters (98.4 feet) per second; and

(5) Have been tested for relieving capacity in accordance with paragraph 1.5.1.3 of API 2000.

(m) The relieving capacity test required by paragraph (l)(5) of this section must be carried out with a flame screen fitted at the discharge opening if—

(1) The design of the pressure relief valve does not secure a minimum vapor discharge velocity of 30 meters (98.4 feet) per second; and

(2) The discharge is not fitted with a flame arrester.

(n) A facility that collects vapors emitted from vessel cargo tanks while inerting, padding, or purging cargo tanks must—

(1) Provide a pressure-sensing device that activates an alarm meeting 33 CFR 154.2100(e) when the pressure of the inerting, padding, or purging gas exceeds either the pressure corresponding to the higher pressure determined in paragraph (b) of this section or a lower pressure agreed upon at the pre-transfer conference;

(2) Provide a pressure-sensing device, independent of the device required by paragraph (n)(1) of this section, which automatically stops the flow of inerting, padding, or purging gas to the

vessel when the pressure of the inerting, padding, or purging gas exceeds 90 percent of the lowest setting of any pressure relief valve on the vessel; and

(3) Locate the pressure-sensing devices required by paragraphs (n)(1) and (n)(2) of this section in the inerting, padding, or purging gas piping downstream of any devices in the gas piping that could potentially isolate the vessel from the sensing devices.

§ 154.2104 Pigging system.

(a) If a pigging system is used to clear cargo in the cargo lines to the tank vessel while the vessel is connected to the facility vapor control system (VCS), the pigging system must be designed with the following safety features:

(1) A bypass loop installed in the main liquid cargo line that contains the pig-receiving device, through which all the liquid flow is channeled during pigging operations. The pig must act as a seal to separate the vessel from the compressed inert gas that is used to propel it as the pig travels from the pig launcher to the pig-receiving device;

(2) A mechanism for restricting liquid and gas flow so that the vessel, personnel, and environment are not endangered. The compressed inert gas flow capacity that this mechanism secures must not be more than 95 percent of the combined capacity of all vessel and facility VCS relief valves located upstream of the facility's remotely operated cargo vapor shutoff valve required by 33 CFR 154.2101(a);

(3) A fast-action automatic shutoff valve such as a solenoid valve, which closes on a high-pressure signal from the pressure sensor required by 33 CFR 154.2103(f), located in the liquid bypass loop downstream of the pig-receiving device;

(4) An interlock with the main cargo line manual block valve so that line-clearing operations cannot begin unless the main cargo line manual block valve is closed; and

(5) An automatic means to detect arrival of the pig at the pig-receiving device.

(b) If a cargo line clearance system without using pigging is used to clear cargo in the cargo lines to the tank vessel while the vessel is connected to the facility VCS, the cargo line clearance system must be approved by the Commandant.

§ 154.2105 Fire, explosion, and detonation protection.

This section applies only to facilities that control vapors of flammable, combustible, or non-high flash point liquid cargoes.

(a) A vapor control system (VCS) with a single facility vapor connection that receives inerted cargo vapor from a vessel and processes it with a vapor recovery unit must—

(1) Be capable of inerting the vapor collection line in accordance with 33 CFR 154.2107(a) before receiving the vessel's vapor and have at least one oxygen analyzer, which satisfies the requirements of 33 CFR 154.2107(f)(1) and (2), (g), and (h)(2) and (3), sampling the vapor concentration continuously at a point as close as practicable to the facility vapor connection. The total pipe length between the analyzer and the facility vapor connection must not exceed 6 meters (19.7 feet); or

(2) Have a detonation arrester located as close as practicable to the facility vapor connection. The total pipe length between the detonation arrester and the facility vapor connection must not exceed 18 meters (59.1 feet) and the vapor piping between the detonation arrester and the facility vapor connection must be protected from any potential internal or external ignition source.

(b) A VCS with a single facility vapor connection that receives only inerted cargo vapor from a vessel and processes it with a vapor destruction unit must—

(1) Satisfy the requirements of paragraph (a)(1) of this section and have a detonation arrester located as close as practicable to the facility vapor connection. The oxygen analyzer required by paragraph (a)(1) can be located 4 meters (13.1 feet) downstream of the detonation arrester. The total pipe length between the detonation arrester and the facility vapor connection must not exceed 18 meters (59.1 feet) and the vapor piping between the detonation

arrester and the facility vapor connection must be protected from any potential internal or external ignition source; or

(2) Have an inerting system that meets the requirements of 33 CFR 154.2107.

(c) A VCS with a single facility vapor connection that receives vapor from a vessel with cargo tanks that are not inerted or are partially inerted, and processes it with a vapor recovery unit must—

(1) Have a detonation arrester located as close as practicable to the facility vapor connection. The total pipe length between the detonation arrester and the facility vapor connection must not exceed 18 meters (59.1 feet) and the vapor piping between the detonation arrester and the facility vapor connection must be protected from any potential internal or external ignition source; or

(2) Have an inerting, enriching, or diluting system that meets the requirements of 33 CFR 154.2107.

(d) A VCS with a single facility vapor connection that receives vapor from a vessel with cargo tanks that are not inerted or are partially inerted, and processes the vapor with a vapor destruction unit must—

(1) Have a detonation arrester located as close as practicable to the facility vapor connection. The total pipe length between the detonation arrester and the facility vapor connection must not exceed 18 meters (59.1 feet) and the vapor piping between the detonation arrester and the facility vapor connection must be protected from any potential internal or external ignition source; and

(2) Have an inerting, enriching, or diluting system that satisfies the requirements of 33 CFR 154.2107.

(e) A VCS with multiple facility vapor connections that receives vapor from vessels with cargo tanks that carry inerted, partially inerted, non-inerted, or combinations of inerted, partially inerted, and non-inerted cargoes, and processes them with a vapor recovery unit, must have a detonation arrester located as close as practicable to each facility vapor connection. The total pipe length between the detonation arrester and each facility vapor connection must not exceed 18 meters (59.1 feet) and the vapor piping between the detonation arrester and the facility vapor connection must be protected from any potential internal or external ignition source.

(f) A VCS with multiple facility vapor connections that receives only inerted cargo vapor from vessels and processes it with a vapor destruction unit must—

(1) Satisfy the requirements of paragraph (a)(1) of this section for each facility vapor connection and have a detonation arrester located as close as practicable to each facility vapor connection. The oxygen analyzer required by paragraph (a)(1) can be located 4 meters (13.1 feet) downstream of the detonation arrester. The total pipe length between the detonation arrester and each facility vapor connection must not exceed 18 meters (59.1 feet) and the vapor piping between the detonation arrester and the facility vapor connection must be protected from any potential internal or external ignition source; or

(2) Have an inerting, enriching, or diluting system that meets the requirements of 33 CFR 154.2107.

(g) A VCS with multiple facility vapor connections that receives vapor from vessels with non-inerted or partially inerted cargoes, and processes the vapor with a vapor destruction unit must—

(1) Have a detonation arrester located as close as practicable to each facility vapor connection. The total pipe length between the detonation arrester and each facility vapor connection must not exceed 18 meters (59.1 feet) and the vapor piping between the detonation arrester and the facility vapor connection must be protected from any potential internal or external ignition source; and

(2) Have an inerting, enriching, or diluting system that meets the requirements of 33 CFR 154.2107.

(h) A VCS with multiple facility vapor connections that simultaneously receives vapor from vessels with inerted, partially inerted, and non-inerted cargoes, and processes the vapor with a vapor destruction unit must—

(1) Have a detonation arrester located as close as practicable to each facility vapor connection. The total pipe length between the detonation arrester and each facility vapor connection must not exceed 18 meters (59.1 feet) and the vapor piping between the detonation arrester and the facility vapor connection must be protected from any potential internal or external ignition source; and

(2) Have either an inerting, enriching, or diluting system that meets the requirements of 33 CFR 154.2107, or a base loading system that meets the requirements of 33 CFR 154.2107(m).

(i) A VCS that uses a vapor balancing system in which cargo vapor from a vessel or facility storage tank is transferred through the facility vapor collection system to facility storage tanks or a vessel must meet the requirements of 33 CFR 154.2110.

(j) Each outlet of a VCS that vents to the atmosphere, except for a discharge vent from a vapor destruction unit or relief valve installed to comply with 33 CFR 154.2103(j) and (k) or 33 CFR 154.2203(e), (k), and (l), must have one of the following located at the outlet:

(1) A detonation arrester;

(2) An end-of-line flame arrester that meets ASTM F 1273 (incorporated by reference, see 33 CFR 154.106); or

(3) An end-of-line flame arrester that meets UL 525 (incorporated by reference, see 33 CFR 154.106) if—

(i) The discharge vent stream's total flammable concentration is proven to be less than 50 percent of the lower flammable limit, or the stream's oxygen concentration is proven to be less than 70 percent by volume of the MOCC, at all times by an outlet concentration analyzer for carbon beds, proof of correct operating temperature for refrigeration systems, or proof of scrubbing medium flow for scrubbers; and

(ii) The proving devices in paragraph (j)(2)(i) of this section close the remotely operated cargo vapor shutoff valve required in 33 CFR 154.2101(a) and close the automatic liquid cargo loading valve if operating outside the conditions necessary to maintain the discharge vent non-combustible.

§ 154.2106 Detonation arresters installation.

This section applies only to facilities collecting vapors of flammable, combustible, or non-high flash point liquid cargoes.

(a) Detonation arresters must be installed in accordance with the guidelines outlined in the arrester manufacturer's acceptance letter provided by the Coast Guard.

(b) On either side of a detonation arrester, line size expansions must be in a straight pipe run and must be no closer than 120 times the pipe's diameter from the detonation arrester unless the manufacturer has test data to show the expansion can be closer.

§ 154.2107 Inerting, enriching, and diluting systems.

This section applies only to facilities that control vapors of flammable, combustible, or non-high flash point liquid cargoes.

(a) Before receiving cargo vapor, a vapor control system (VCS) that uses a gas for inerting, enriching, or diluting must be capable of inerting, enriching, or diluting the vapor collection system, at a minimum of two system volume exchanges of inerting, enriching, or diluting gas, downstream of the injection point.

(b) A VCS that uses an inerting, enriching, or diluting system must be equipped, except as permitted by 33 CFR 154.2105(a), with a gas injection and mixing arrangement located as close as practicable to the facility vapor connection and no closer than 10 meters (32.8 feet) upstream from the vapor processing unit or the vapor-moving device that is not protected by a detonation arrester required by 33 CFR 154.2108(b). The total pipe length between the arrangement and the facility vapor connection must not exceed 22 meters (72.2 feet). The arrangement must be such that it provides complete mixing of the gases within 20 pipe diameters of the injection point. The vapor piping between the arrangement and the facility vapor connection must be protected from any potential internal or external ignition source.

(c) A VCS that uses an inerting or enriching system may not be operated at

a vacuum after the injection point unless—

(1) There are no vacuum relief valves or other devices that could allow air into the vapor collection system downstream of the injection point, and pipe connections are flanged, threaded, or welded so no air can leak into the VCS; or

(2) An additional analyzer is used to monitor the vapor concentration downstream of such device and a mechanism is provided to inject additional inerting or enriching gas.

(d) A VCS that uses analyzers to control the amount of inerting, enriching, or diluting gas injected into the vapor collection line must be equipped with at least two analyzers. The analyzers must be connected so that—

(1) When two oxygen analyzers are used, the higher oxygen concentration reading controls the inerting or enriching system and activates the alarm and automatic shutdown system required by paragraph (h), (j), or (k)(2) of this section;

(2) When voting systems using more than two oxygen analyzers are used, the majority pair controls the inerting or enriching system and activates the alarm and automatic shutdown system required by paragraph (h), (j), or (k)(2) of this section;

(3) When two hydrocarbon analyzers are used, the lower hydrocarbon concentration reading controls the enriching system and activates the alarm and automatic shutdown system required by paragraph (i) of this section;

(4) When voting systems using more than two hydrocarbon analyzers are used, the majority pair controls the enriching system and activates the alarm and automatic shutdown system required by paragraph (i) of this section;

(5) When two hydrocarbon analyzers are used, the higher hydrocarbon concentration reading controls the diluting system and activates the alarm and automatic shutdown system required by paragraph (l) of this section; and

(6) When voting systems using more than two hydrocarbon analyzers are used, the majority pair controls the diluting system and activates the alarm and automatic shutdown system required by paragraph (l) of this section.

(e) A VCS that uses volumetric measurements to control the amount of inerting, enriching, or diluting gas injected into the vapor collection line must be equipped, except as permitted by paragraph (m) of this section, with at least one analyzer to activate the alarms and automatic shutdown systems required by this section.

(f) Each oxygen or hydrocarbon analyzer required by this section must—

(1) Be installed in accordance with API 550 (incorporated by reference, see 33 CFR 154.106);

(2) Have a system response time of not more than one minute from sample input to 95 percent of final stable value as tested per 33 CFR 154.2180 and 33 CFR 154.2181; and

(3) Continuously sample the vapor concentration not more than 30 pipe diameters from the gas injection point.

(g) A VCS must not use oxygen analyzers that operate at elevated temperatures (*i.e.*, zirconia oxide or thermomagnetic).

(h) An inerting system must—

(1) Supply sufficient inert gas to the vapor stream to ensure that the oxygen concentration downstream of the injection point is maintained at or below 60 percent by volume of the minimum oxygen concentration for combustion (MOCC) for the specific combination of cargo vapors and inert gas being processed, which may be determined by using Coast Guard guidance available at *http://homeport.uscg.mil*;

(2) Activate an alarm that satisfies the requirements of 33 CFR 154.2100(e) when the oxygen concentration in the vapor collection line exceeds 60 percent by volume of the MOCC for the specific combination of cargo vapors and inert gas being processed, which may be determined by using Coast Guard guidance available at *http://homeport.uscg.mil*;

(3) Close the remotely operated cargo vapor shutoff valve required by 33 CFR 154.2101(a) when the oxygen concentration in the vapor collection line exceeds 70 percent by volume of the MOCC for the specific combination of cargo vapors and inert gas being processed, which may be determined by using Coast Guard VCS guidance available at *http://homeport.uscg.mil*;

(4) Have a detonation arrester and a mechanism to prevent the backflow of flammable vapors installed between the combustion device and the inert gas injection point, if a combustion device is used to produce the inert gas; and

(5) Have an alarm value in paragraph (h)(2) of this section that is at least one percentage point less than the shutdown value in paragraph (h)(3) of this section. If the analyzers used to measure oxygen concentrations cannot accurately differentiate between the alarm value and the shutoff value, the alarm value must be lowered until the analyzers become operable.

(i) An enriching system must—

(1) Supply sufficient compatible hydrocarbon vapor to the vapor stream to make sure that the total flammable concentration downstream of the injection point is maintained either at or above 170 percent by volume of the upper flammable limit or above the upper flammable limit plus 10 percentage points, whichever is lower;

(2) Activate an alarm that satisfies the requirements of 33 CFR 154.2100(e) when the total flammable concentration in the vapor collection line either falls below 170 percent by volume of the upper flammable limit or below the upper flammable limit plus 10 percentage points, whichever is lower;

(3) Close the remotely operated cargo vapor shutoff valve required by 33 CFR 154.2101(a) when the total flammable concentration in the vapor collection line either falls below 150 percent by volume of the upper flammable limit or below the upper flammable limit plus 7.5 percentage points, whichever is lower; and

(4) Have an upper flammable limit listed in paragraphs (i)(1), (i)(2), and (i)(3) of this section which is either the cargo's upper flammable limit or the enriching gas's upper flammable limit, whichever is higher. Alternatively, the mixture's upper flammable limit, which may be determined by using methods found in Coast Guard guidance available at *http://homeport.uscg.mil*, may be used.

(j) Oxygen analyzers may be used instead of hydrocarbon analyzers in a VCS using an enriching system that receives cargo vapor only from a vessel with non-inerted cargo tanks, providing that the analyzers—

(1) Activate an alarm satisfying the requirements of 33 CFR 154.2100(e) when the oxygen concentration in the vapor collection line exceeds a level corresponding to either a total flammable concentration of 170 percent by volume of the upper flammable limit or the upper flammable limit plus 10 percentage points, whichever yields a higher oxygen concentration;

(2) Close the remotely operated cargo vapor shutoff valve required by 33 CFR 154.2101(a) when the oxygen concentration in the vapor collection line exceeds a level corresponding to either a total flammable concentration of 150 percent by volume of the upper flammable limit or the upper flammable limit plus 7.5 percentage points, whichever yields a higher oxygen concentration;

(3) Have an alarm value in paragraph (j)(1) of this section that is at least one percentage point less than the shutdown value in paragraph (j)(2) of this section. If the oxygen analyzers used to measure oxygen concentrations cannot accurately differentiate between the alarm value and the shutdown value, the alarm value must be lowered until the analyzers become operable; and

(4) Have an upper flammable limit listed in paragraphs (j)(1) and (j)(2) of this section which is either the cargo's upper flammable limit or the enriching gas's upper flammable limit, whichever is higher. Alternatively, the mixture's upper flammable limit, which may be determined by using methods found in Coast Guard VCS guidance available at *http://homeport.uscg.mil*, may be used.

(k) An enriching system may be used in a VCS that receives inerted cargo vapor from a vessel if—

(1) Hydrocarbon analyzers are used to comply with paragraphs (i)(2) and (i)(3) of this section; or

(2) Oxygen analyzers are used, in which case the analyzers must—

(i) Activate an alarm meeting 33 CFR 154.2100(e) when the oxygen concentration in the vapor collection line exceeds 60 percent by volume of the MOCC for the specific combination of cargo vapors and gases; and

(ii) Close the remotely operated cargo vapor shutoff valve required by

33 CFR 154.2101(a) when the oxygen concentration exceeds 70 percent by volume of the MOCC for the specific combination of cargo vapors and gases; and

(3) The MOCC in paragraphs (k)(2)(i) and (k)(2)(ii) of this section is either the cargo's MOCC or the enriching gas's MOCC, whichever is lower. Alternatively, the mixture's MOCC, which may be determined using Coast Guard VCS guidance available at *http://homeport.uscg.mil*, may be used.

(l) An air dilution system must—

(1) Supply a sufficient amount of additional air to the vapor stream to keep the total flammable concentration downstream of the injection point below 30 percent by volume of the lower flammable limit;

(2) Activate an alarm that satisfies the requirements of 33 CFR 154.2100(e) when the total flammable concentration in the vapor collection line exceeds 30 percent by volume of the lower flammable limit; and

(3) Close the remotely operated cargo vapor shutoff valve required by 33 CFR 154.2101(a) when the total flammable concentration in the vapor collection line exceeds 50 percent by volume of the lower flammable limit.

(m) An enriching system may use a base loading method to control the amount of enriching gas in a vapor collection system if—

(1) The flow rate of enriching gas is determined by assuming the vapor entering the facility vapor connection consists of 100 percent air;

(2) Two independent devices are used to verify the correct enriching gas volumetric flow rate. One of the two devices must be a flow meter;

(3) One of the devices activates an alarm that satisfies the requirements of 33 CFR 154.2100(e) when the amount of enriching gas added results in a total flammable concentration in the vapor collection line either below 170 percent by volume of the upper flammable limit or below the upper flammable limit plus 10 percentage points, whichever is lower;

(4) The second device activates closure of the remotely operated cargo vapor shutoff valve required by 33 CFR 154.2101(a) when the amount of enriching gas added results in a total flammable concentration in the vapor collection line either below 150 percent by volume of the upper flammable limit or below the upper flammable limit plus 7.5 percentage points, whichever is lower; and

(5) The upper flammable limit in paragraphs (m)(3) and (4) of this section is either the cargo's upper flammable limit or the enriching gas's upper flammable limit, whichever is higher. Alternatively, the mixture's upper flammable limit, which may be determined using Coast Guard guidance available at *http://homeport.uscg.mil*, may be used.

(n) For controlling vapors of different cargoes at multiple berths while using enriching gas, the highest upper flammable limit or the lowest MOCC of the cargo or enriching gas, whichever is applicable, is used to determine the analyzer alarm and shutdown setpoints. Alternatively, the mixture's upper flammable limit or MOCC, which may be determined by using Coast Guard guidance available at *http://homeport.uscg.mil*, may be used.

(o) For controlling vapors of inert and non-inert cargoes at multiple berths while using enriching gas—

(1) The lowest MOCC of the cargo or enriching gas is used to determine the analyzer alarm and shutdown setpoints at all berths. Alternatively, the mixture's MOCC, which may be determined using Coast Guard guidance available at *http://homeport.uscg.mil*, may be used; or

(2) A base loading method meeting the requirements of paragraph (m) of this section is used for all berths.

§ 154.2108 Vapor-moving devices.

(a) Paragraphs (b) and (e) of this section apply only to facilities collecting vapors of flammable, combustible, or non-high flash point liquid cargoes.

(b) Each inlet and outlet to a vapor-moving device that handles vapor that has not been inerted, enriched, or diluted in accordance with 33 CFR 154.2107 must be fitted with a detonation arrester; however, the outlet detonation arrester may be omitted if the vapor-moving device is within 50 times the pipe's diameter of the detonation arrester required by 33 CFR 154.2109(a).

(c) If the vapor is handled by a reciprocating or screw-type compressor in

the vapor collection system, the compressor must be installed with indicators and audible and visible alarms to warn against the following conditions:

(1) Excessive gas temperature at the compressor outlet;

(2) Excessive cooling water temperature;

(3) Excessive vibration;

(4) Low lube oil level;

(5) Low lube oil pressure; and

(6) Excessive shaft bearing temperature.

(d) If the vapor is handled by a liquid ring-type compressor in the vapor collection system, it must be installed with indicators and audible and visible alarms to warn against the following conditions:

(1) Low level of liquid sealing medium;

(2) Lack of flow of the liquid sealing medium;

(3) Excessive temperature of the liquid sealing medium;

(4) Low lube oil level;

(5) Low lube oil pressure, if pressurized lubricating system; and

(6) Excessive shaft bearing temperature.

(e) If the vapor is handled by a centrifugal compressor, fan, or lobe blower in the vapor collection system, construction of the blades or housing must be one of the following:

(1) Blades or housing of nonmetallic construction;

(2) Blades and housing of nonferrous material;

(3) Blades and housing of corrosion resistant steel;

(4) Ferrous blades and housing with one-half inch or more design tip clearance;

(5) Nonferrous blades and ferrous housing with one-half inch or more design tip clearance; or

(6) Blades of aluminum or magnesium alloy and a ferrous housing with a nonferrous insert sleeve at the periphery of the impeller.

§ 154.2109 Vapor recovery and vapor destruction units.

Paragraphs (a), (b), and (e) of this section apply only to facilities collecting vapors of flammable, combustible, or non-high flash point liquid cargoes.

(a) The inlet to a vapor recovery unit that receives vapor that has not been inerted, enriched, or diluted in accordance with 33 CFR 154.2107 must be fitted with a detonation arrester.

(b) The inlet to a vapor destruction unit must—

(1) Have a liquid seal that meets the requirements of paragraph (e) of this section, except as specified by paragraph (b)(3) of this section; and

(2) Have two quick-closing stop valves installed in the vapor line. One of them must be installed upstream of the detonation arrester required by paragraph (c)(2) of this section. The quick-closing stop valves must—

(i) Close within 30 seconds after detection of a condition that requires the closing of these two quick-closing stop valves by a control component required by this subpart for a vapor control system (VCS) with a vapor destruction unit;

(ii) Close automatically if the control signal is lost;

(iii) Have a local valve position indicator or be designed so that the valve position is readily determined from the valve handle or valve stem position; and

(iv) If the valve seat is fitted with resilient material, be a Category A valve as defined by 46 CFR 56.20–15 and not allow appreciable leakage when the resilient material is damaged or destroyed; and

(3) Instead of a liquid seal as required by paragraph (b)(1) of this section, have the following:

(i) An anti-flashback burner accepted by the Commandant and installed at each burner within the vapor destruction unit; and

(ii) A differential pressure sensor that activates the quick-closing stop valves as required by paragraph (b)(2) of this section upon sensing a reverse flow condition.

(c) A vapor destruction unit must—

(1) Not be within 30 meters (98.8 feet) of any tank vessel berth or mooring at the facility;

(2) Have a detonation arrester fitted in the inlet vapor line; and

(3) Activate an alarm that satisfies the requirements of 33 CFR 154.2100(e) and shut down when a flame is detected on the detonation arrester.

(d) When a vapor destruction unit shuts down or has a flame-out condition, the vapor destruction unit control system must—

(1) Activate and close the quick-closing stop valves required by paragraph (b)(2) of this section;

(2) Close the remotely operated cargo vapor shutoff valve required by 33 CFR 154.2101(a); and

(3) Automatically shut down any vapor-moving devices installed in the VCS.

(e) If a liquid seal is installed at the inlet to a vapor destruction unit, then—

(1) The liquid used in the liquid seal must be compatible with the vapors being controlled;

(2) For partially or totally soluble cargoes that can polymerize in solution, there must be an adequate amount of inhibitor in the liquid seal;

(3) The liquid seal must be compatible with the design of the VCS and must not contribute to the flammability of the vapor stream; and

(4) The liquid seal must have a low-level alarm and a low-low level shutdown.

§ 154.2110 Vapor balancing requirements.

Paragraphs (a)(2) and (4), (b), and (c) of this section apply only to facilities transferring vapors of flammable, combustible, or non-high flash point liquid cargoes.

(a) A vapor control system (VCS) that uses a vapor balancing system in which cargo vapor is transferred from a vessel cargo tank or facility storage tank through the facility vapor collection system to a facility storage tank or vessel cargo tank must—

(1) Have facility storage tank high-level alarm systems and facility storage tank overfill control systems, independent of the high-level alarm system, arranged to prevent the cargo from entering the vapor return line;

(2) Have a detonation arrester located within the storage tank containment area and a detonation arrester located as close as practicable to the facility vapor connection. The total pipe length between the detonation arrester and the facility vapor connection must not exceed 18 meters (59.1 feet) and the vapor piping between the detonation arrester and the facility vapor connection must be protected from any potential internal or external ignition source;

(3) Meet the overpressure and overvacuum protection requirements of 33 CFR 154.2103; and

(4) As an alternative to paragraph (a)(2) of this section, inert cargo systems can meet the requirements of 33 CFR 2105(a)(1).

(b) A vapor balancing system, while in operation to transfer vapor to or from a vessel cargo tank and connected by way of the facility storage tank vent to a facility's main VCS with a vapor destruction unit, must have—

(1) A means to prevent backflow of vapor from the facility's main VCS to the marine vapor line; and

(2) Two fail-safe, quick-closing valves installed in the marine vapor line at the facility storage tank that automatically close when—

(i) Flame is detected on the facility storage tank; or

(ii) The temperature of the facility storage tank's vapor space reaches 177 °C (350 °F) or 70 percent of the vapor's auto-ignition temperature in degrees Celsius, whichever is lower.

(c) Transferring vapor from a non-inerted facility storage tank to a vessel cargo tank that is required to be inerted in accordance with 46 CFR 32.53, 153.500, or Table 151.05, is prohibited.

(d) A vapor balancing system that transfers vapor to a vessel cargo tank must not use a vapor-moving device to assist vapor transfer or inject inerting, enriching, or diluting gas into the vapor line without approval from the Commandant.

§ 154.2111 Vapor control system connected to a facility's main vapor control system.

(a) When a marine vapor control system (VCS), or a marine vapor collection system, is connected to a facility's main VCS serving other facility processing areas that are not related to tank vessel operations, the marine vapor line, before the point where the marine VCS connects to the facility's main VCS, must be fitted with—

(1) A detonation arrester, unless both the marine VCS and the facility's main VCS only control vapors of cargoes that are non-flammable, non-combustible, or that have high flashpoints;

(2) Two fail-safe, quick closing valves, one on each side of any detonation arrester required by paragraph (a)(1) of this section, which automatically close when—

(i) A flame is detected on the detonation arrester;

(ii) The facility's marine VCS is not in operation; or

(iii) Vapor back flow to the marine vapor line is detected; and

(3) A means to prevent backflow of vapors to the marine vapor line.

(b) Vapors from facility processing areas unrelated to tank vessel operations must not enter the vapor line of a marine VCS before the devices required by paragraph (a) of this section.

(c) Except as specified by paragraph (d) of this section, a facility that wants to connect a facility vapor line, which collects vapor from other facility processing areas that are not related to tank vessel operations, to a marine VCS before the devices required by 33 CFR 154.2109(b)(1) and (2) and (c)(2), must receive approval in writing from the Commandant.

(d) A facility may connect a facility vapor line, which collects vapor from other facility processing areas that are not related to tank vessel operations, to a marine vapor line downstream of the devices required by 33 CFR 154.2109(b)(1) and (2) and (c)(2) to share the marine vapor destruction unit.

§ 154.2112 Vapors with potential to polymerize or freeze—Special requirements.

(a) A vapor control system (VCS) that controls vapors with the potential to polymerize at a normal ambient condition must—

(1) Be designed to prevent condensation of monomer vapor. Methods such as heat tracing and insulation are permitted if they do not result in an increased risk of polymerization;

(2) Be designed so that polymerization can be detected. Any points suspected of being sites for potential polymerization buildup must be equipped with inspection openings; and

(3) Include devices to measure the pressure drop across detonation arresters due to polymerization. The devices should activate an alarm on high pressure drop to warm of polymerization. Any device used for this purpose, including differential pressure monitors, must not have the capability of transmitting a detonation across the detonation arrester.

(b) A VCS that controls cargo vapors that potentially freeze at ambient temperature must have a design that prevents the freezing of vapors or condensate at ambient temperature or that detects and removes the liquid condensate and solids to prevent accumulation.

§ 154.2113 Alkylene oxides—Special requirements.

A vapor control system (VCS) that controls vapors of an alkylene oxide, except for carriage under 46 CFR part 151 (listed in Table 151.05 with ''Pressure'' entry in the ''Cargo identification, Pressure, b'' column), must comply with paragraphs (a) and (b) of this section.

(a)(1) The VCS's equipment, hoses, piping, and all piping components, including valves, flanges, and fittings, must be of a type and constructed out of materials suitable for use with alkylene oxide;

(2) The VCS used for collecting an alkylene oxide vapor must not be used for collecting other vapors and must be separated from any other VCS, except as specified by paragraph (b) of this section; and

(b) The VCS must be adequately cleaned in accordance with 33 CFR 154.2150(p) and either recertified by a certifying entity or approved by a marine chemist if—

(1) The VCS is used to control other vapors; or

(2) The VCS is returned to alkylene oxide service after being used to control other cargo vapors.

TRANSFER FACILITIES—OPERATIONS

§ 154.2150 General requirements.

(a) No transfer operation using a vapor control system (VCS) may be conducted unless the facility operator has a copy of the facility operations

manual, with the VCS addendum, marked by the local Coast Guard Captain of the Port (COTP) as required by 33 CFR 154.325(d).

(b) Personnel in charge of a facility must ensure that—

(1) The facility controls vapor only from cargoes that are properly authorized for vapor control in the facility's certification letter;

(2) The facility transfers vapor only to or from a vessel that has its certificate of inspection or certificate of compliance endorsed in accordance with 46 CFR 39.1013 or 46 CFR 39.1015 for each cargo intended for transfer; and

(3) If the vessel tanks to be vapor controlled contain vapor from previous cargo transfers other than the cargo or cargoes intended for transfer, the facility and vessel must be authorized to control the additional vapor from the previous cargo transfers. Any oxygen or hydrocarbon analyzer alarm and shutdown setpoints must be set to accommodate all of the cargo vapors.

(c) The facility personnel in charge must ensure that safety system testing is conducted as follows:

(1) Pressure sensors, alarms, and automatic shutdown systems required by 33 CFR 154.2103, 154.2107, and 154.2110, except as exempted by paragraph (c)(2) or specified by paragraph (c)(3) of this section, must be tested by applying altering test pressures at the sensors not more than 24 hours before each transfer;

(2) The pressure sensors required by 33 CFR 154.2103 may meet the requirements of the test program contained in 33 CFR 154.2180 and 33 CFR 154.2181 instead of the current program, which mandates tests within 24 hours before each transfer as required by paragraph (c)(1) of this section;

(3) Visible and audible alarm indicators must be tested not more than 24 hours before each transfer;

(4) The analyzers, except for flammability analyzers, required by 33 CFR 154.2105, 154.2107, and 154.2110, except as exempted by paragraph (c)(5) of this section, must be checked for calibration response by using a zero gas and a span gas not more than 24 hours before each transfer;

(5) The analyzers required by 33 CFR 154.2105, 154.2107, and 154.2110 may be checked for calibration response by use of a zero gas and a span gas as defined by the test program contained in 33 CFR 154.2180 and 33 CFR 154.2181, and comply with the minimum requirements as defined in 33 CFR 154.2180 and 33 CFR 154.2181, instead of the test required by paragraph (c)(4) of this section; and

(6) The vacuum and pressure relief valves required by 33 CFR 154.2103 must be manually checked per manufacturers' instructions to verify that the valves unseat easily and then reset to the closed position without constraint. Any required flame screens or flame arresters must also be visually checked to ensure that they are not damaged.

(d) The proper position of all valves in the vapor line between the vessel's tanks and the facility vapor collection system must be verified before the start of the transfer operation.

(e) A tank barge overfill control system that meets the requirements of 46 CFR 39.2009(a)(2) must—

(1) Not be connected to an overfill sensor circuit that exceeds the system's rated inductance and capacitance; and

(2) Be tested for proper operation after connection is made with the vessel by simulating liquid high level and overfill at each tank.

(f) When receiving vapor from a vessel with cargo tanks that are required to be inerted in accordance with 46 CFR 32.53, 46 CFR 153.500, or 46 CFR Table 151.05, the remotely operated cargo vapor shutoff valve required by 33 CFR 154.2101(a) must not be opened until the pressure at the facility vapor connection, downstream of the facility vapor connection, exceeds 0.2 pounds per square inch gauge (psig).

(g) The initial cargo transfer rate must not exceed the rate agreed upon at the pre-transfer conference and 46 CFR 39.3001(g).

(h) The cargo transfer rate must not exceed the maximum allowable transfer rate as determined by the lesser of the following:

(1) A transfer rate corresponding to the maximum vapor processing rate for the VCS, as specified in the facility operations manual; or

(2) The vessel's maximum transfer rate in accordance with 46 CFR 39.3001(d).

(i) While transferring cargo to a vessel connected to a VCS, compressed air or gas may be used to clear cargo hoses and loading arms, but must not be used to clear cargo lines. However, compressed inert gas such as nitrogen can be used to clear cargo lines if a pigging system that meets 33 CFR 154.2104 is provided.

(j) If a pigging system is used to clear cargo lines to the tank vessel while the vessel is connected to the facility VCS, the following operational requirements apply:

(1) The VCS must be in operation, with all of the high-pressure alarms and shutdowns required by 33 CFR 154.2103 active, before and during pigging operations;

(2) Personnel performing the pigging operation must be adequately trained on the specific pigging system being used. Accurate written procedures that address event sequence, equipment, safety precautions, and overpressurization hazards must be made available to all personnel involved in the pigging operations;

(3) Pigging procedures must be reviewed by both the vessel and facility personnel in charge as part of the pre-transfer conference. Topics of discussion during the pre-transfer conference must include, but need not be limited to—

(i) Event sequence;

(ii) Equipment;

(iii) Safety precautions;

(iv) Overpressurization hazards;

(v) Personnel roles;

(vi) Gas volumetric flow rates;

(vii) Gas pressures;

(viii) Volume of residual cargo in the line;

(ix) Amount of ullage space that is available for line displacement and connections;

(x) Valve alignment;

(xi) Units of measure;

(xii) Terminology; and

(xiii) Anticipated duration of the evolution;

(4) The pig must be inspected to ensure that it is of sufficient durability and condition; be of an appropriate size, type, and construction for the intended operation; and be inspected for defects before each use and replaced if necessary;

(5) Personnel performing pigging operations must monitor pig movement at all times. The facility and vessel manifold valves must be closed immediately after the pig reaches the pig-receiving device; and

(6) If the pigging system contains pressure-sensing, relieving, or alarming components in addition to those required by 33 CFR 154.2103, the components must be periodically tested in accordance with paragraphs (c) and (q) of this section.

(k) If one or more analyzers required by 33 CFR 154.2107(d) or (e) or 154.2110 become inoperable during a transfer operation, the operation may continue, provided that at least one analyzer remains operational; however, no further transfer operations may start until all inoperable analyzers are replaced or repaired.

(l) Whenever a condition results in a shutdown of the VCS, the emergency shutdown system required by 33 CFR 154.550 must be automatically activated to terminate cargo loading into tanks which are being vapor controlled.

(m) If it is suspected that a flare in the VCS has had a flashback, or if a flame is detected on a detonation arrester required by 33 CFR 154.2109(c)(2), the transfer operation must stop and cannot restart until that detonation arrester and any quick-closing stop valves downstream of the detonation arrester are inspected and found to be in satisfactory condition.

(n) Before each transfer operation, the freezing point of each cargo must be determined. If there is a possibility that the ambient air temperature during transfer operations will be at or below the freezing point of the cargo, adequate precautions must be taken to prevent freezing of vapor or condensate, or to detect and remove the frozen liquid and condensation to prevent accumulation.

(o) Before each transfer operation, the cargo vapor must be evaluated to determine its potential to polymerize, and adequate precautions must be taken to prevent and detect polymerization of the cargo vapors.

(p) Mixing of incompatible vapors is prohibited. The VCS piping, equipment, hoses, valves, and arresters must be purged between vapor control operations that involve incompatible chemical vapors in accordance with the following:

(1) Chemical compatibility must be determined by using the procedures contained in 46 CFR part 150;

(2) Purge gas must be an inert gas, air, or enriching gas, and must be adequate to reduce the level of residual vapor to a level at which reaction with the subsequent vapor cannot occur; and

(3) The required duration of purge time must be calculated and approved by the certifying entity during the certification or recertification.

(q) After each transfer operation, the VCS piping, equipment, hoses, valves, and arresters must be purged with at least two-system volume exchanges of non-reactive gas or air so the VCS is left with a safe condition.

(r) VCS equipment and instrumentation must be tested in compliance with 33 CFR 156.170(g) or (i), with the COTP or designated representative invited to observe these tests. The test procedure and a checklist must be approved by the certifying entity during the initial certification of the system and incorporated into the facility operations manual.

(s) A transfer operation that includes collection of vapor emitted to or from a vessel's cargo tanks must meet the transfer requirements of 33 CFR 156.120(aa), and a declaration of inspection meeting the requirements of 33 CFR 156.150 must be completed before each transfer.

ALTERNATIVE ANALYZER AND PRESSURE SENSOR RELIABILITY TESTING

§ 154.2180 Alternative testing program—Generally.

(a) As an alternative to complying with the vapor control system (VCS) analyzer and pressure sensor safety testing requirements provided by 33 CFR 154.2150(c) and 33 CFR 154.2250(c), the facility person in charge may administer a reliability assurance test program in accordance with this section and 33 CFR 154.2181.

(b) As used in this section—

(1) *Calibration drift* or *CD* means the difference in the analyzer output readings from the established reference value after a stated period of operation during which no unscheduled maintenance, repair, or adjustment took place;

(2) *Calibration error* or *CE* means the difference between the gas concentration exhibited by the gas analyzer and the known concentration of the cylinder gas;

(3) *Response time* or *RT* means the time interval between the start of a step change in the system input (e.g., change of calibration gas) and the time when the data recording system displays 95 percent of the final stable value; and

(4) *Sampling system bias* or *SSB* means the difference between the gas concentrations indicated by the measurement system when a known cylinder gas is introduced at or near the sampling probe and when the same gas is introduced directly to the analyzer.

(c) All analyzers used in a VCS must be tested for safety system functions, CE, CD, RT, and SSB, in accordance with 33 CFR 154.2181.

(d) All pressure sensors/switches used in a VCS must be tested for safety system functions, CE and CD, in accordance with 33 CFR 154.2181.

(e) The facility person in charge must ensure the following:

(1) Calibration of instrumentation using standard procedures provided by the manufacturer or service provider;

(2) Monitoring of all interlocks, alarms, and recording devices for proper operation while instrumentation is being calibrated;

(3) Use of a certified gas standard that is within plus or minus two (2) percent of its certified concentration to calibrate the analyzers; and

(4) Use of a certified secondary standard that is standardized against a primary standard to calibrate the pressure sensors/switches.

(f) Upon failing any test under 33 CFR 154.2181, the facility person in charge must ensure that all monthly and quarterly tests, including CE, CD, RT, and SSB, are conducted; and until all quarterly tests are completed, the person in charge must ensure that the vapor control alarms and automatic

shutdown system are tested no more than 24 hours prior to any transfer or tank barge cleaning operation.

(g) Analyzers required by 33 CFR 154.2105(a) and (j) and 154.2107(d) and (e) must be checked for calibration using a zero gas and a span gas.

(h) The facility operator must maintain and make available upon the request of the Commandant and the certifying entity that certifies the VCS the following reliability assurance test program documents for two years:

(1) All test procedures;

(2) The dates of all tests, type of tests made, and who conducted the tests;

(3) Results of the tests, including the ''as found'' and ''as left'' conditions; and

(4) A record of the date and time of repairs made.

§ 154.2181 Alternative testing program—Test requirements.

(a) The safety system function test required by 33 CFR 154.2180 must be performed once every two weeks and test for the proper operation and interaction of the analyzer or pressure sensor/switch with shutdown interlocks, and audible and visible alarm devices.

(b) The calibration error (CE) test required by 33 CFR 154.2180 must be performed once every month and documented as shown in Forms 154.2181(b)(2) and 154.2181(b)(3) of this section, to document the accuracy and linearity of the monitoring equipment for the entire measurement range.

(1) The CE test must expose the measurement system, including all monitoring components (e.g., sample lines, filters, scrubbers, conditioners, and as much of the probe as practicable), to the calibration gases, introduced through an injection port located so as to allow a check of the entire measurement system when calibration gases are introduced;

(2) The CE test must check the calibrated range of each analyzer using a lower (zero) and upper (span) reference gas standard. Three measurements must be taken against each standard and recorded as shown in Form 154.2181(b)(2) of this section, with the average of the three values in each case then used to calculate the CE according to this equation (where CE = percentage calibration error based upon span of the instrument, R = reference value of zero or high-level calibration gas introduced into the monitoring system, A = actual monitoring system response to the calibration gas, and S = span of the instrument):

$$CE = \frac{|R - A|}{S} \times 100$$

Form 154.2181(b)(2): Calibration error determination.

	Calibration value	Monitor response	Difference	
			Zero	Span
1-Zero				
1-Span				
2-Zero				
2-Span				
3-Zero				
3-Span				
Mean Difference =				
Calibration Error =			%	%

(3) The CE test must check each pressure sensor/switch for upscale (activate) and downscale (deactivate) hysteresis around the sensor/switch set pressure. The calibration error must be calculated and recorded as shown in Form 154.2181(b)(3) of this section. Test the pressure sensor/switch three times and record the desired setting and the as-found set pressure. Calculate and record the difference of the two settings. Calculate the error percentage using this equation (where CE = percentage calibration error based upon span of the instrument, R = reference setting of the instrument, A = actual response as recorded on the test instrument, and S = span of the instrument):

$$CE = \frac{|R - A|}{S} \times 100$$

Record sensor ''as-left'' setting only if an adjustment is made.

Form 154.2181(b)(3): Switch calibration error.

QUALITY ASSURANCE DATA SHEET
SWITCH DATA RECORD

DATE. _____ F.I. NO. _____

MANUFACTURER _____

MODEL NO._____ SERIAL NO. _____

SERVICE _____

CR = CLOSES ON RISE OR = OPENS ON RISE
CF = CLOSES ON FALL OF = OPENS ON FALL

TEST EQUIPMENT	MODEL NO.	SERIAL NO.

FUNCTION	DESIRED	AS FOUND	DIFFERENCE	ERROR %	AS LEFT
Test #1 Set					
Reset					
Test #2 Set					
Reset					
Test #3 Set					
Reset					

SPEC NO. _____	TEST PERFORMED BY: _____
DATE: _____	ACCEPTED BY: _____

REMARKS:
_____
_____
_____
_____
_____
_____

(c) The calibration drift (CD) test required by 33 CFR 154.2180 must be performed once every quarter and documented as shown in Form 154.2181(c)(3) of this section, to verify the ability of the instrument to conform to the established calibration.

(1) The CD measurement must be conducted once daily for 7 consecutive days without making any adjustments to the instruments.

(2) Conduct the CD test at zero level (between 0 and 20 percent of the instrument span) and at high level (between 75 and 95 percent of the instrument span).

(3) Calculate and record the CD for 7 consecutive days using the equations in paragraphs (b)(2) and (3) of this section and Form 154.2181(c)(3) of this section.

Form 154.2181(c)(3): Calibration drift determination.

Day	Day/time	Reference value (RV)	Monitor value	Difference	Percent of RV
Low-Level:					
High-Level:					

(d) The response time (RT) test required by 33 CFR 154.2180 must be performed once every quarter and documented as shown in Form 154.2181(d) of this section, to determine the RT which is the largest average response time in the upscale or downscale direction.

(1) For systems that normally operate below 20 percent of calibrated range, only a span (upscale) test is required.

(2) Record the span (upscale) value, zero (downscale) cylinder gas value, and stable, initial process-measured variable value.

(3) Determine the step change, which is equal to the average difference between the initial process-measured variable value and the average final stable cylinder gas-measured value.

(4) To determine both upscale and downscale step change intervals—

(i) Inject span (or zero) cylinder gas into the sample system as close to the sample probe as possible. Existing systems that inject the gas at the analyzer box do not need to be modified. However, the gas transit time between the analyzer box and the sample probe must be taken into account;

(ii) Allow the analyzer to stabilize and record the stabilized value. A stable reading is achieved when the concentration reading deviates less than 6 percent from the measured average concentration in 6 minutes or if it deviates less than 2 percent of the monitor's span value in 1 minute;

(iii) Stop the span (or zero) gas flow, allow the monitor to stabilize back to the measured variable value, and record the stabilized value; and

(iv) Repeat this procedure a total of three times and subtract the average final monitor reading from the average starting monitor value to determine the average upscale (or downscale) step change.

(5) Determine the response time, which is equal to the elapsed time at which 95 percent of the step change occurred.

(i) To find this value, take 5 percent of the average step change value and subtract the result from the cylinder gas analyzed value as shown in the following equation:

95% step change value = cylinder gas value − (0.05 × avg. step change)

(ii) Inject span (or zero) cylinder gas into the sample system as close to the sample probe as possible, and measure the time it takes to reach the 95 percent step change value.

(iii) Repeat the previous step (paragraph (d)(5)(ii) of this section) a total of three times each with span and zero cylinder gas to determine average upscale and downscale response times.

(iv) Compare the response times achieved for the upscale and downscale tests. The longer of these two times equals the response time for the analyzer.

Form 154.2181(d): Response time.

Date of test _____
Component/system ID#: _____
Analyzer type _____
Serial Number _____
High-level gas concentration: ___ ppm / %
Zero-level gas concentration: ___ ppm / %
Analyzer span setting: ___ ppm / %
Upscale:
Stable starting monitor value: ____, ____, ____;
Avg. ____ ppm / %
Stable ending monitor reading: ____, ____, ____;
Avg. ____ ppm / %
Step change interval: ____ ppm; 95%
Step change value: ____ ppm / %
Elapsed time: ___, ____, ____; Avg. _____ seconds
Downscale:
Stable starting monitor value: ____, ____, ____;
Avg. ____ ppm / %
Stable ending monitor reading: ____, ____, ____;
Avg. ____ ppm / %
Step change interval: ____ ppm; 95%
Step change value: ____ ppm / %
Elapsed time: ____, ____, ____;
Avg. ____ seconds

System response time = ___ seconds

(e) The sample system bias (SSB) test required by 33 CFR 154.2180 must be performed once every quarter and documented, to establish that the system has no additional influence on the measurement being made by the analyzer.

(1) Conduct a close CE test in accordance with paragraph (b) of this section, by injecting calibration gas as close as possible to the analyzer, eliminating as much of the sample system components as possible, while still simulating the normal source operating conditions.

(2) If system integrity is maintained, and it has not become contaminated, the difference between the close and standard CE tests should be the same.

(f) For CE and CD tests, analyzers and pressure sensors must meet the following minimum compliance requirements:

(1) Oxygen analyzers must not deviate from the reference value of the zero- or high-level calibration gas by more than 0.5 percent of full scale;

(2) Total hydrocarbon analyzers must not deviate from the reference value of the zero- or high-level calibration gas by more than 1 percent of full scale; and

(3) Pressure sensors/switches must not deviate from the reference value of the zero- or high-level calibration gas by more than 1.5 percent of full range.

(g) For RT tests, each oxygen or hydrocarbon analyzer must respond, in less than 1 minute, to 95 percent of the final stable value of a test span gas.

(h) For SSB tests, the analyzer system bias must be less than 5 percent of the average difference between the standard CE test and the close CE test, divided by the individual analyzer span.

TANK BARGE CLEANING FACILITIES—VCS DESIGN AND INSTALLATION

§ 154.2200 Applicable transfer facility design and installation requirements.

A tank barge cleaning facility's (TBCF's) vapor control system (VCS) must meet the following design and installation requirements of this subpart for a transfer facility's VCS:

(a) 33 CFR 154.2100(b), (c), (f), (g), (i), (j), and (k): general design and installation requirements;

(b) 33 CFR 154.2102: facility requirements for vessel liquid overfill protection, if a TBCF receives vapor from a tank barge that is required by 46 CFR 39.6001(f)(3) to be equipped with a liquid overfill protection arrangement and meet 46 CFR 39.2009;

(c) 33 CFR 154.2106: detonation arrester installation;

(d) 33 CFR 154.2107: inerting, enriching, and diluting systems;

(e) 33 CFR 154.2108: vapor-moving devices;

(f) 33 CFR 154.2109: vapor recovery and vapor destruction units;

(g) 33 CFR 154.2111: VCS connected to a facility's main VCS;

(h) 33 CFR 154.2112: special requirements for vapors with the potential to polymerize or freeze; and

(i) 33 CFR 154.2113: special requirements for alkylene oxides.

§ 154.2201 Vapor control system—general requirements.

(a) Vapor control system (VCS) design and installation must eliminate potential overpressure and vacuum hazards, sources of ignition, and mechanical damage to the maximum practicable extent. Each remaining hazard source that is not eliminated must be specifically addressed in the protection system design and system operational requirements.

(b) Any pressure, flow, or concentration indication required by this part must provide a remote indicator on the facility where the VCS is controlled, unless the local indicator is clearly visible and readable from the operator's normal position at the VCS control station.

(c) Any condition requiring an alarm as specified in this part must activate an audible and visible alarm where the VCS is controlled.

(d) A mechanism must be developed and used to eliminate any liquid from the VCS.

(e) A liquid knockout vessel must be installed between the facility vapor connection and any vapor-moving device in systems that have the potential for two-phase (vapor/liquid) flow from the barge or the potential for liquid

condensate to form as a result of the enrichment process. The liquid knockout vessel must have—

(1) A means to indicate the level of liquid in the device;

(2) A high liquid level sensor that activates an alarm that satisfies the requirements of 33 CFR 154.2100(e); and

(3) A high-high liquid level sensor that closes the remotely operated cargo vapor shutoff valve required by 33 CFR 154.2101(a) and shuts down any vapor-moving device before liquid is carried over to the vapor-moving device. One sensor with two stages may be used to meet this requirement as well as paragraph (e)(2) of this section.

§ 154.2202 Vapor line connections.

(a) 33 CFR 154.2101(a), (e), and (g) apply to a tank barge cleaning facility's (TBCF's) vapor control system (VCS).

(b) The remotely operated cargo vapor shutoff valve required by 33 CFR 154.2101(a) must be located upstream of the liquid knockout vessel required by 33 CFR 154.2201(e).

(c) A fluid displacement system must have a remotely operated shutoff valve installed in the fluid injection supply line between the point where the inert gas or other medium is generated and the fluid injection connection. The valve must comply with 33 CFR 154.2101(a)(1) through (6).

(d) Each hose used for transferring vapors must—

(1) Have a design burst pressure of at least 25 pounds per square inch gauge (psig);

(2) Have a maximum allowable working pressure (MAWP) no less than 5 psig;

(3) Be capable of withstanding at least the maximum vacuum rating of the vapor-moving device without collapsing or constricting;

(4) Be electrically continuous, with a maximum resistance of 10,000 ohms;

(5) Have flanges with a bolthole arrangement complying with the requirements for Class 150 ANSI B16.5 flanges (incorporated by reference, see 33 CFR 154.106);

(6) Be abrasion and kinking resistant; and

(7) Be compatible with vapors being transferred.

(e) Fixed vapor collection arms must meet the requirements of paragraph (d) of this section.

§ 154.2203 Facility requirements for barge vapor overpressure and vacuum protection.

In this section, the requirements of having a flame arrester or a flame screen at the opening of a pressure relief valve or a vacuum relief valve apply only to facilities collecting vapors of flammable, combustible, or non-high flash point liquid cargoes.

(a) A facility vapor collection system must have a capacity for collecting cleaning facility vapors at a rate of no less than 1.1 times the facility's maximum allowable gas-freeing rate, plus any inerting, diluting, or enriching gas that may be added to the system.

(b) A facility vapor control system (VCS) must be designed to prevent the pressure in a vessel's cargo tanks from going below 80 percent of the highest setting of any of the barge's vacuum relief valves or exceeding 80 percent of the lowest setting of any of the barge's pressure relief valves. The VCS must be capable of maintaining the pressure in the barge's cargo tanks within this range at any gas-freeing rate less than or equal to the maximum gas-freeing rate determined by the requirements in 46 CFR 39.6007(c).

(c) A fluid displacement system must provide a pressure-sensing device that activates an alarm that satisfies the requirements of 33 CFR 154.2100(e) when the pressure at the fluid injection connection exceeds either the pressure corresponding to the upper pressure determined in paragraph (b) of this section or a lower pressure agreed upon by the facility and barge persons in charge. The pressure-sensing device must be located in the fluid displacement system's piping downstream of any devices that could potentially isolate the barge's vapor collection system from the pressure-sensing device. The pressure measured by the sensing device must be corrected for pressure drops across any barge piping, hoses, or arms that are used to inject the fluid.

(d) A fluid displacement system must provide a pressure-sensing device that is independent of the device required by paragraph (c) of this section. This

pressure-sensing device must activate the fluid displacement system emergency shutdown and close the remotely operated cargo vapor shutoff valve required by 33 CFR 154.2101(a). It must also close the remotely operated shutoff valve required by 33 CFR 154.2202(c) when the pressure at the fluid injection connection reaches a corresponding 90 percent of the lowest setting of any pressure relief valve on the barge. The pressure-sensing device must be located in the fluid displacement system's piping downstream of any device that could potentially isolate the barge's VCS from the pressure-sensing device. The pressure measured by the sensing device must be corrected for pressure drops across any barge piping, hoses, or arms that are used to inject the fluid.

(e) If a vapor-moving device capable of drawing more than 0.5 pounds per square inch gauge (psig) vacuum is used to draw vapor, air, inert gas, or other medium from the barge, a vacuum relief valve must be installed on the facility's fixed vapor collection system piping between the facility vapor connection and the vapor-moving device. The vacuum relief valve must—

(1) Relieve at a pressure such that the pressure at the facility vapor connection is maintained at or above 14.2 pounds per square inch absolute (psia) (−0.5 psig);

(2) Have a relieving capacity equal to or greater than the maximum capacity of the vapor-moving device;

(3) Have a flame arrester or flame screen fitted at the vacuum relief opening;

(4) Have been tested for relieving capacity in accordance with paragraph 1.5.1.3 of API 2000 (incorporated by reference, see 33 CFR 154.106), with a flame arrester or flame screen fitted; and

(5) Be constructed of materials compatible with the vapors being gas-freed.

(f) The vacuum relief valve requirements of paragraph (e) of this section may include a valve to isolate it from the facility vapor collection piping, provided—

(1) The isolation valve must be interlocked with any vapor-moving device such that the vapor-moving device cannot activate unless the isolation valve is in the full open position (*i.e.*, the vacuum relief valve is not isolated); and

(2) The isolation valve can only be closed after the facility person in charge has acknowledged that the hatch opening required by 33 CFR 154.2250(i) is open and secured.

(g) If a vapor-moving device capable of drawing more than 0.5 psig vacuum is used to draw vapor, air, inert gas, or other medium from the barge, the facility must install portable, intrinsically safe, pressure-sensing devices on any cargo tank, or on the common vapor header, at the connection required by 46 CFR 39.6003(b) before any cleaning operation begins on the tank. A pressure-sensing device must be provided that—

(1) Activates an alarm that satisfies 33 CFR 154.2100(e) when the pressure in the cargo tank being cleaned falls below 80 percent of the highest setting of any of the barge's vacuum relief valves, or a higher pressure agreed upon by the facility and barge persons in charge; and

(2) Activates the emergency shutdown system for the vapor-moving device and closes the remotely operated cargo vapor shutoff valve described in 33 CFR 154.2101(a) when the pressure in the cargo tank being cleaned falls below 90 percent of the highest setting of any of the barge's vacuum relief valves, or a higher pressure agreed upon by the facility and barge persons in charge. This pressure-sensing device must be independent of the device used to activate an alarm required by paragraph (g)(1) of this section.

(h) The pressure-sensing devices required by paragraph (g) of this section must—

(1) Have suitable means, such as approved intrinsic safety barriers that are able to accept passive devices, so that the under-pressure alarm circuits of the barge side of the under-pressure control system, including cabling, normally closed switches, and pin and sleeve connectors, are intrinsically safe;

(2) Be connected to the under-pressure alarm system by a four-wire, 16-ampere shielded flexible cable; and

(3) Have cable shielding grounded to the under-pressure alarm system.

(i) A pressure-indicating device must be provided within 6 meters (19.7 feet) of the facility vapor connection which displays the pressure in the vapor collection line upstream of any isolation valve and any devices, such as strainers, that could cause a blockage in the vapor line.

(j) A fluid displacement system must include a pressure-indicating device that displays the pressure in the fluid displacement system injection line. This device must be within 6 meters (19.7 feet) of the fluid injection connection.

(k) If a fluid displacement system used to inject inert gas or another medium into the cargo tank of a barge being gas-freed is capable of producing a pressure greater than 2 psig, a pressure relief valve must be installed in the fluid displacement system injection line between the fluid injection source and the fluid injection connection that—

(1) Relieves at a predetermined pressure such that the pressure in the fluid displacement system at the fluid injection connection does not exceed 1.5 psig;

(2) Has a relieving capacity equal to or greater than the maximum volumetric flow capacity of the fluid displacement system;

(3) Has a flame screen or flame arrester fitted at the relief opening; and

(4) Has been tested for relieving capacity in accordance with paragraph 1.5.1.3 of API 2000, when fitted with a flame screen or flame arrester.

(l) When using the fluid displacement system, if the pressure in the facility's fixed vapor collection system can exceed 2 psig during a malfunction in an inerting, enriching, or diluting system, a pressure relief valve must—

(1) Be installed between the point where inerting, enriching, or diluting gas is added to the facility's fixed vapor collection system piping and the facility vapor connection;

(2) Relieve at a predetermined pressure such that the pressure at the facility vapor connection does not exceed 1.5 psig;

(3) Have a relieving capacity equal to or greater than the maximum capacity of the facility's inerting, enriching, or diluting gas source;

(4) Have a flame screen or flame arrester fitted at the relief opening;

(5) Have been tested for relieving capacity in accordance with paragraph 1.5.1.3 of API 2000, when fitted with a flame screen or flame arrester; and

(6) Be constructed of materials compatible with the vapors being gas-freed.

(m) For fluid displacement systems, the fluid injection connection must be electrically insulated from the fluid injection source in accordance with OCIMF ISGOTT section 17.5 (incorporated by reference, see 33 CFR 154.106).

(n) If the pressure relief valve is not designed with a minimum vapor discharge velocity of 30 meters (98.4 feet) per second, the relieving capacity test required by paragraphs (k)(4) and (l)(5) of this section must be carried out with a flame screen or flame arrester fitted at the discharge opening.

(o) A pressure indicating device must be provided by the facility for installation at the connection required by 46 CFR 39.6003(b).

§ 154.2204 Fire, explosion, and detonation protection.

This section applies to tank barge cleaning facilities (TBCFs) collecting vapors of flammable, combustible, or non-high flash point liquid cargoes.

(a) A vapor control system (VCS) with a single facility vapor connection that processes vapor with a vapor recovery unit must—

(1) Have a detonation arrester located as close as practicable to the facility vapor connection. The total pipe length between the detonation arrester and the facility vapor connection must not exceed 18 meters (59.1 feet) and the vapor piping between the detonation arrester and the facility vapor connection must be protected from any potential internal or external ignition source; or

(2) Have an inerting, enriching, or diluting system that meets the requirements of 33 CFR 154.2107.

(b) A VCS with a single facility vapor connection that processes vapor with a vapor destruction unit must—

(1) Have a detonation arrester located as close as practicable to the facility vapor connection. The total pipe length between the detonation arrester

and the facility vapor connection must not exceed 18 meters (59.1 feet) and the vapor piping between the detonation arrester and the facility vapor connection must be protected from any potential internal or external ignition source; and

(2) Have an inerting, enriching, or diluting system that meets the requirements of 33 CFR 154.2107.

(c) A VCS with multiple facility vapor connections that processes vapor with a vapor recovery unit must have a detonation arrester located as close as practicable to each facility vapor connection. The total pipe length between the detonation arrester and each facility vapor connection must not exceed 18 meters (59.1 feet) and the vapor piping between the detonation arrester and the facility vapor connection must be protected from any potential internal or external ignition source.

(d) A VCS with multiple facility vapor connections that processes vapor with a vapor destruction unit must—

(1) Have a detonation arrester located as close as practicable to each facility vapor connection. The total pipe length between the detonation arrester and each facility vapor connection must not exceed 18 meters (59.1 feet) and the vapor piping between the detonation arrester and the facility vapor connection must be protected from any potential internal or external ignition source; and

(2) Have an inerting, enriching, or diluting system that meets the requirements of 33 CFR 154.2107.

(e) 33 CFR 154.2105(j) applies to a TBCF's VCS.

TANK BARGE CLEANING FACILITIES—OPERATIONS

§ 154.2250 General requirements.

(a) No tank barge cleaning operation using a vapor control system (VCS) may be conducted unless the facility operator has a copy of the facility operations manual, with the VCS addendum, marked by the local Coast Guard Captain of the Port (COTP) as required by 33 CFR 154.325(d).

(b) The facility person in charge must ensure that a facility can receive vapors only from a barge with a VCS that has been approved by the Coast Guard Marine Safety Center as meeting the requirements of 46 CFR 39.6000.

(c) The facility person in charge must ensure that safety system tests are conducted as follows:

(1) Pressure sensors, alarms, and automatic shutdown systems required by 33 CFR 154.2203, except as exempted by paragraph (c)(2) or as specified by paragraph (c)(3) of this section, must be tested by applying altering test pressures at the sensors not more than 24 hours before each cleaning operation;

(2) The pressure sensors required by 33 CFR 154.2203 may meet the test program in accordance with 33 CFR 154.2180 and 33 CFR 154.2181 instead of the test within 24 hours before each cleaning operation as required by paragraph (c)(1) of this section;

(3) Visible and audible alarm indicators must be tested not more than 24 hours before each cleaning operation;

(4) The analyzers, except for flammability analyzers, required by 33 CFR 154.2105(j) and 154.2107, except as exempted by paragraph (c)(5) of this section, must be checked for calibration response by use of a zero gas and a span gas not more than 24 hours before each cleaning operation;

(5) The analyzers required by 33 CFR 154.2105(j) and 154.2107 may be checked for calibration response by use of a zero gas and a span gas as defined by the test program contained in 33 CFR 154.2180 and 33 CFR 154.2181, and comply with the minimum requirements as defined in 33 CFR 154.2180 and 33 CFR 154.2181, instead of as provided by paragraph (c)(4) of this section; and

(6) The vacuum and pressure relief valves required by 33 CFR 154.2203 must be manually checked per manufacturers' instructions to verify that the valves unseat easily and then reset to the closed position without constraint. Any required flame screens or flame arresters must also be visually checked to ensure that they are not damaged.

(d) The facility person in charge must verify the following before beginning cleaning operations:

(1) Each valve in the vapor collection system between the barge's cargo tank and the facility vapor collection system is correctly positioned to allow the collection of vapors;

(2) A vapor collection hose or arm is connected to the barge's vapor collection system;

(3) The electrical insulating devices required by 33 CFR 154.2101(g) and 154.2203(m) are installed;

(4) The maximum allowable gas-freeing rate as determined by the lesser of the following:

(i) A gas-freeing rate corresponding to the maximum vapor processing rate for the tank barge cleaning facility's (TBCF's) VCS, as specified in the facility operations manual; or

(ii) The barge's maximum gas-freeing rate determined in accordance with 46 CFR 39.6007(c);

(5) The gas-freeing rate will not exceed the maximum allowable gas-freeing rate as determined in paragraph (d)(4) of this section;

(6) The maximum allowable stripping rate is determined and does not exceed the volumetric capacity of the barge's vacuum relief valve at the valve's setpoint for the cargo tank being stripped;

(7) The barge's maximum and minimum operating pressures;

(8) Each vapor collection hose has no unrepaired or loose covers, kinks, bulges, soft spots, or any other defects that would permit the discharge of vapor through the hose material; and no external gouges, cuts, or slashes that penetrate the first layer of hose reinforcement;

(9) The freezing point of each cargo. If there is a possibility that the ambient air temperature during cleaning operations will be at or below the freezing point of the cargo, adequate precautions have been taken to prevent freezing of vapor or condensate, or to detect and remove the frozen liquid and condensate to prevent accumulation; and

(10) The cargo vapor is evaluated for the potential to polymerize, and adequate precautions have been taken to prevent and detect polymerization of the cargo vapors.

(e) VCS equipment and instrumentation must be tested in compliance with 33 CFR 156.170(g) or (i), with the COTP or designated representative invited to observe these tests. The test procedure and a checklist must be approved by the certifying entity during the initial certification of the system and incorporated into the facility operations manual.

(f) If one or more analyzers required by 33 CFR 154.2107(d) or (e) become inoperable during gas-freeing operations, the operation may continue, provided that at least one analyzer remains operational; however, no further gas-freeing operations may be started until all inoperable analyzers are repaired or replaced.

(g) Whenever a condition results in a shutdown of the VCS, the cleaning operations must be immediately terminated. The operation may not resume until the cause of the shutdown has been investigated and corrective action taken.

(h) If it is suspected that a flare in the VCS has had a flashback, or if a flame is detected on a detonation arrester required by 33 CFR 154.2109(c)(2), the cleaning operation must be stopped and may not resume until the detonation arrester and any quick-closing stop valves downstream of the detonation arrester have been inspected and found to be in satisfactory condition.

(i) If a vacuum displacement system is used for gas-freeing, the facility person in charge of the cleaning operation must verify the following items:

(1) The minimum amount of open area for air flow on the barge has been determined so that the pressure in the cargo tank cannot be less than 14.5 pounds per square inch absolute (psia) (−0.2 pounds per square inch gauge (psig)) at the maximum flow capacity of the vapor-moving device;

(2) Any hatch or fitting providing the minimum open area has been secured open so that accidental closure is not possible; and

(3) The hatch and/or fitting must be opened before the pressure in the cargo tank falls below 10 percent of the highest setting of any of the barge's vacuum relief valves.

(j) 33 CFR 154.2150(p) and (q) apply to a TBCF's VCS.

APPENDIX A TO PART 154—GUIDELINES FOR DETONATION FLAME ARRESTERS

This appendix contains the draft ASTM standard for detonation flame arresters. Devices meeting this standard will be accepted by the Commandant (CG–522).

1. *Scope*

1.1 This standard provides the minimum requirements for design, construction, performance and testing of detonation flame arresters.

2. *Intent*

2.1 This standard is intended for detonation flame arresters protecting systems containing vapors of flammable or combustible liquids where vapor temperatures do not exceed 60 °C. For all tests, the test media defined in 14.1.1 can be used except where detonation flame arresters protect systems handling vapors with a maximum experimental safe gap (MESG) below 0.9 millimeters. Detonation flame arresters protecting such systems must be tested with appropriate media (the same vapor or a media having a MESG no greater than the vapor). Various gases and their respective MESG are listed in attachment 1.

2.2 The tests in this standard are intended to qualify detonation flame arresters for all in-line applications independent of piping configuration provided the operating pressure is equal to or less than the maximum operating pressure limit specified in the manufacturer's certification and the diameter of the piping system in which the detonation arrester is to be installed is equal to or less than the piping diameter used in the testing.

NOTE: Detonation flame arresters meeting this standard as Type I devices, which are certified to be effective below 0 °C and which can sustain three stable detonations without being damaged or permanently deformed, also comply with the minimum requirements of the International Maritime Organization, Maritime Safety Committee Circular No. 373 (MSC/Circ. 373/Rev.1).

3. *Applicable Documents*

3.1 ASTM Standards[1]

A395 Ferritic Ductile Iron Pressure-Retaining Castings For Use At Elevated Temperatures.

F722 Welded Joints for Shipboard Piping Systems

F1155 Standard Practice for Selection and Application of Piping System Materials

3.2 ANSI Standards[2]

B16.5 Pipe Flanges and Flanged Fittings.

3.3 Other Documents

3.3.1 ASME Boiler and Pressure Vessel Code[2]

Section VIII, Division 1, Pressure Vessels

Section IX, Welding and Brazing Qualifications.

3.3.2 International Maritime Organization, Maritime Safety Committee[3]

MSC/Circ. 373/Rev. 1—Revised Standards for the Design, Testing and Locating of Devices to Prevent the Passage of Flame into Cargo Tanks in Tankers.

3.3.3 International Electrotechnical Commission[4]

Publication 79–1—Electrical Apparatus for Explosive Gas Atmospheres.

4. *Terminology*

4.1 $\Delta P/P_o$—The dimensionless ratio, for any deflagration and detonation test of 14.3, of the maximum pressure increase (the maximum pressure minus the initial pressure), as measured in the piping system on the side of the arrester where ignition begins by the device described in paragraph 14.3.3, to the initial absolute pressure in the piping system. The initial pressure should be greater than or equal to the maximum operating pressure specified in paragraph 11.1.7.

4.2 Deflagration—A combustion wave that propagates subsonically (as measured at the pressure and temperature of the flame front) by the transfer of heat and active chemical species to the unburned gas ahead of the flame front.

4.3 Detonation—A reaction in a combustion wave propagating at sonic or supersonic (as measured at the pressure and temperature of the flame front) velocity. A detonation is stable when it has a velocity equal to the speed of sound in the burnt gas or may be unstable (overdriven) with a higher velocity and pressure.

4.4 Detonation flame arrester—A device which prevents the transmission of a detonation and a deflagration.

4.5 Flame speed—The speed at which a flame propagates along a pipe or other system.

4.6 Flame Passage—The transmission of a flame through a device.

4.7 Gasoline Vapors—A non-leaded petroleum distillate consisting essentially of aliphatic hydrocarbon compounds with a boiling range approximating 65 °C/75 °C.

5. *Classification*

5.1 The two types of detonation flame arresters covered in this specification are classified as follows:

5.1.1 Type I—Detonation flame arresters acceptable for applications where stationary flames may rest on the device.

5.1.2 Type II—Detonation flame arresters acceptable for applications where stationary flames are unlikely to rest on the device, and further methods are provided to prevent flame passage when a stationary flame occurs. One example of ''further methods'' is a temperature monitor and an automatic shutoff valve.

6. *Ordering Information*

6.1 Orders for detonation flame arresters under this specification shall include the following information as applicable:

6.1.1 Type (I or II).

6.1.2 Nominal pipe size.

[1] Footnotes appear at the end of this article.

6 1.3 Each gas or vapor in the system and the corresponding MESG.

6.1.4 Inspection and tests other than specified by this standard.

6.1.5 Anticipated ambient air temperature range.

6.1.6 Purchaser's inspection requirements (see section 10.1).

6.1.7 Description of installation.

6.1.8 Materials of construction (see section 7).

6.1.9 Maximum flow rate and the maximum design pressure drop for that maximum flow rate.

6.1.10 Maximum operating pressure.

7. *Materials*

7.1 The detonation flame arrester housing, and other parts or bolting used for pressure retention, shall be constructed of materials listed in ASTM F 1155 (incorporated by reference, see §154.106), or section VIII, Division 1 of the ASME Boiler and Pressure Vessel Code. Cast and malleable iron shall not be used; however, ductile cast iron in accordance with ASTM A395 may be used.

7.1.1 Arresters, elements, gaskets, and seals must be made of materials resistant to attack by seawater and the liquids and vapors contained in the system being protected (see section 6.1.3).

7.2 Nonmetallic materials, other than gaskets and seals, shall not be used in the construction of pressure retaining components of the detonation flame arrester.

7.2.1 Nonmetallic gaskets and seals shall be non-combustible and suitable for the service intended.

7.3 Bolting materials, other than that of section 7.1, shall be at least equal to those listed in Table 1 of ANSI B16.5 (incorporated by reference, see 33 CFR 154.106).

7.4 The possibility of galvanic corrosion shall be considered in the selection of materials.

7.5 All other parts shall be constructed of materials suitable for the service intended.

8. *Other Requirements*

8.1 Detonation flame arrester housings shall be gas tight to prevent the escape of vapors.

8.2 Detonation flame arrester elements shall fit in the housing in a manner that will insure tightness of metal-to-metal contacts in such a way that flame cannot pass between the element and the housing.

8.2.1 The net free area through detonation flame arrester elements shall be at least 1.5 times the cross-sectional area of the arrester inlet.

8.3 Housings, elements, and seal gasket materials shall be capable of withstanding the maximum and minimum pressures and temperatures to which the device may be exposed under both normal and the specified fire test conditions in section 14, and shall be capable of withstanding the hydrostatic pressure test of section 9.2.3.

8.4 Threaded or flanged pipe connections shall comply with the applicable B16 standards in ASTM F 1155 (incorporated by reference, see §154.106). Welded joints shall comply with ASTM F 722 (incorporated by reference, see §154.106).

8.5 All flat joints of the housing shall be machined true and shall provide for a joint having adequate metal-to-metal contact.

8.6 Where welded construction is used for pressure retaining components, welded joint design details, welding and non-destructive testing shall be in accordance with Section VIII, Division 1, of the ASME Code and ASTM F 722 (incorporated by reference, see §154.106). Welders and weld procedures shall be qualified in accordance with section IX of the ASME Code.

8.7 The design of detonation flame arresters shall allow for ease of inspection and removal of internal elements for replacement, cleaning or repair without removal of the entire device from the system.

8.8 Detonation flame arresters shall allow for efficient drainage of condensate without impairing their efficiency to prevent the passage of flame. The housing may be fitted with one or more drain plugs for this purpose. The design of a drain plug should be such so that by cursory visual inspection it is obvious whether the drain has been left open.

8.9 All fastenings shall be protected against loosening.

8.10 Detonation flame arresters shall be designed and constructed to minimize the effect of fouling under normal operating conditions.

8.11 Detonation flame arresters shall be capable of operating over the full range of ambient air temperatures anticipated.

8.12 Detonation flame arresters shall be of first class workmanship and free from imperfections which may affect their intended purpose.

8.13 Detonation flame arresters shall be tested in accordance with section 9.

9. *Tests*

9.1 Tests shall be conducted by an independent laboratory capable of performing the tests. The manufacturer, in choosing a laboratory, accepts that it is a qualified independent laboratory by determining that it has (or has access to) the apparatus, facilities, personnel, and calibrated instruments that are necessary to test detonation flame arresters in accordance with this standard.

9.1.1 A test report shall be prepared by the laboratory which shall include:

9.1.1.1 Detailed drawings of the detonation flame arrester and its components (including a parts list identifying the materials of construction).

9.1.1.2 Types of tests conducted and results obtained. This shall include the maximum temperature reached and the length of

testing time in section 14.2 in the case of Type II detonation flame arresters.

9.1.1.3 Description of approved attachments (reference 9.2.6).

9.1.1.4 Types of gases or vapors for which the detonation flame arrester is approved.

9.1.1.5 Drawings of the test rig.

9.1.1.6 Record of all markings found on the tested detonation flame arrester.

9.1.1.7 A report number.

9.2 One of each model Type I and Type II detonation flame arrester shall be tested. Where approval of more than one size of a detonation flame arrester model is desired, only the largest and smallest sizes need be tested provided it is demonstrated by calculation and/or other testing that intermediate size devices have equal or greater strength to withstand the force of a detonation and have equivalent detonation arresting characteristics. A change of design, material, or construction which may affect the corrosion resistance, or ability to resist endurance burning, deflagrations or detonations shall be considered a change of model for the purpose of this paragraph.

9.2.1 The detonation flame arrester shall have the same dimensions, configuration, and most unfavorable clearances expected in production units.

9.2.2 A corrosion test shall be conducted. In this test, a complete detonation flame arrester, including a section of pipe similar to that to which it will be fitted, shall be exposed to a 20% sodium chloride solution spray at a temperature of 25 °C for a period of 240 hours, and allowed to dry for 48 hours. Following this exposure, all movable parts shall operate properly and there shall be no corrosion deposits which cannot be washed off.

9.2.3 The detonation flame arrester shall be subjected to a hydrostatic pressure test of at least 350 psig for ten minutes without rupturing, leaking, or showing permanent distortion.

9.2.4 Flow characteristics as declared by the manufacturer, shall be demonstrated by appropriate tests.

9.2.5 Detonation flame arresters shall be tested for endurance burn and deflagration/detonation in accordance with the test procedures in section 14. Type I detonation flame arresters shall show no flame passage when subjected to both tests. Type II detonation flame arresters shall show no evidence of flame passage during the detonation/deflagration tests in section 14.3. Type II detonation flame arresters shall be tested for endurance burn in accordance with section 14.2. From the endurance burn test of a Type II detonation flame arresters, the maximum temperature reached and the test duration shall be recorded and provided as part of the laboratory test report.

9.2.6 Where a detonation flame arrester is provided with cowls, weather hoods and deflectors, etc., it shall be tested in each configuration in which it is provided.

9.2.7 Detonation flame arresters which are provided with a heating arrangement designed to maintain the surface temperature of the device above 85 °C shall pass the required tests at the maximum heated operating temperature.

9.2.8 Each finished detonation arrester shall be pneumatically tested at 10 psig to ensure there are no defects or leakage.

10. *Inspection*

10.1 The manufacturer shall afford the purchaser's inspector all reasonable access necessary to assure that the device is being furnished in accordance with this standard. All examinations and inspections shall be made at the place of manufacture, unless otherwise agreed upon.

10.2 Each finished detonation arrester shall be visually and dimensionally checked to ensure that the device corresponds to this standard, is certified in accordance with section 11 and is marked in accordance with section 12. Special attention shall be given to the checking of welds and the proper fit-ups of joints (see sections 8.5 and 8.6).

11. *Certification*

11.1 Manufacturer's certification that a detonation flame arrester meets this standard shall be provided in an instruction manual. The manual shall include as applicable:

11.1.1 Installation instructions and a description of all configurations tested (reference paragraph 9.2.6). Installation instructions to include the device's limitations.

11.1.2 Operating instructions.

11.1.3 Maintenance requirements.

11.1.3.1 Instructions on how to determine when arrester cleaning is required and the method of cleaning.

11.1.4 Copy of test report (see section 9.1.1).

11.1.5 Flow test data, maximum temperature and time tested (Type II).

11.1.6 The ambient air temperature range over which the device will effectively prevent the passage of flame.

NOTE: Other factors such as condensation and freezing of vapors should be evaluated at the time of equipment specification.

11.1.7 The maximum operating pressure for which the device is suitable.

12. *Marking*

12.1 Each detonation flame arrester shall be permanently marked indicating:

12.1.1 Manufacturer's name or trademark.

12.1.2 Style, type, model or other manufacturer's designation for the detonation flame arrester.

12.1.3 Size of the inlet and outlet.

12.1.4 Type of device (Type I or II).

12.1.5 Direction of flow through the detonation flame arrester.

12.1.6 Test laboratory and report number.

12.1.7 Lowest MESG of gases that the detonation flame arrester is suitable for.

12.1.8 ASTM designation of this standard.

12.1.9 Ambient air operating temperature range.

12.1.10 Maximum operating pressure.

13. *Quality Assurance*

13.1 Detonation flame arresters shall be designed, manufactured and tested in a manner that ensures they meet the characteristics of the unit tested in accordance with this standard.

13.2 The detonation flame arrester manufacturer shall maintain the quality of the arresters that are designed, tested and marked in accordance with this standard. At no time shall a detonation flame arrester be sold with this standard designation that does not meet the requirements herein.

14. *Test Procedures for Detonation Arresters*

14.1 *Media/Air Mixtures*

14.1.1 For vapors from flammable or combustible liquids with a MESG greater than or equal to 0.9 mm, technical grade hexane or gasoline vapors shall be used for all tests in this section except technical grade propane may be used for the deflagration/detonation tests in section 14.3. For vapors with a MESG less than 0.9 mm, the specific vapor (or alternatively, a media with a MESG less than or equal to the MESG of the vapor) must be used as the test medium in all Section 14 tests.

14.1.2 Hexane, propane, gasoline and other test vapors shall be mixed with air to form the most easily ignitable mixture.[5]

14.2 *Endurance Burn Test Procedure*

14.2.1 An endurance burning test shall be carried out as follows:

14.2.1.1 The test rig shall consist of an apparatus producing an explosive mixture, a small tank with a diaphragm, a prototype of the detonation flame arrester and a firing source in close proximity to the test device (see Figure 1). The detonation flame arrester shall be installed so that the mixture emission is vertically upwards, or installed in the position for which it is designed and which will cause the most severe heating of the device under the prescribed endurance burn conditions. In this position the mixture shall be ignited.

14.2.1.2 Endurance burn test shall start by using the most easily ignitable test vapor/air mixture with the aid of a pilot flame or a spark igniter at the outlet. The flammable mixture may be reignited as necessary in the course of the endurance burn.

14.2.1.3 Temperature measurement will be performed on the surface of the arrester element half way between the center and its edge.

14.2.1.4 By varying the proportions of the flammable mixture and the flow rate, the detonation flame arrester shall be heated by a stable flame on the surface of the arrester until the highest obtainable temperature is reached on the ignited side or until the temperature on the side which was not ignited (protected side) rises 100 °C.

14.2.1.5 The flammable mixture proportions will then be varied again until the conditions which result in the highest temperature on the protected side are achieved. This temperature shall be maintained for a period of ten minutes, after which the flow shall be stopped and the conditions observed. The highest attainable temperature is considered to have been reached when any subsequent rise of temperature does not exceed 0.5 °C per minute over a ten minute period.

14.2.1.6 If difficulty arises in establishing the highest attainable temperature on the protected side, the following criteria shall apply. When the increase in temperature on the protected side occurs so slowly that its temperature does not rise 100 °C, the conditions which produced the highest temperature on the ignited side of the arrester will be maintained for two hours. For the condition in which the temperature on the protected side continues to rise at a rate in excess of 0.5 °C per minute for a 10 minute period, endurance burning shall be continued, using the most severe conditions of flammable mixtures and flow rate, for a period of two hours. In either of these cases, at the end of the two hour period, the flow shall be stopped and the conditions observed. The two hour interval shall be measured commencing with the setting of the conditions which produced the most severe conditions of mixture and flow rate. For Type I detonation flame arresters, flame passage shall not occur during this test. For Type II detonation flame arresters, the maximum temperature obtained, and the time elapsed from the time when the most severe conditions are set to when flame passage occurs, shall be recorded. However, for Type II detonation flame arresters the test may be terminated 15 minutes after setting the most severe conditions on the protected side.

14.3 *Deflagration/Detonation Test Procedure*

14.3.1 A detonation flame arrester shall be installed at one end of a pipe of the same diameter as the inlet of the detonation flame arrester (see Figure 2). The length and configuration of the test pipe shall develop a stable detonation[6] at the device and shall be capable, by change in its length or configuration, of developing deflagrations and unstable (overdriven) detonations as measured on the side of the pipe where ignition occurs (run-up side). For deflagration testing, two test piping arrangements shall be used on the outlet side of the detonation flame arrester (the side which is not ignited). In both of the following end arrangements, the outlet side pipe diameter shall be equal to that on the run-up side. In one arrangement, the outlet side pipe shall be at least 10 pipe diameters long with a plastic bag over the free end. (Alternate end of pipe closures are also acceptable provided they easily give way

during the course of the test, and the closure allows the required gas concentration to be maintained throughout the test piping arrangement.) In the other arrangement the outlet side pipe shall be fitted with a restriction located 0.6 meters from the outlet side arrester flange. The size of the restriction for each nominal size detonation flame arrester shall be as follows:

Nominal pipe diameter (inches)	Restriction diameter (inches)
3	½
4	½
6	1
8	1½
10	1½
12	2
18	2
24	2

The entire pipe shall be filled with the most easily ignitable vapor/air mixture to a test pressure corresponding to or greater than the upper limit of the device's maximum operating pressure (see 11.1.7). In order to obtain this test pressure, a device such as a bursting disc may be fitted on the open end of the device in place of the plastic bag. The concentration of the mixture should be verified by appropriate testing of the gas composition. The vapor/air mixture shall then be ignited.

14.3.2 Flame speeds shall be measured by optical devices capable of providing accuracy of ±5%. These devices shall be situated no more than a distance equal to 3% of the length of the run-up pipe apart with one device no more than 8 inches from the end of the test pipe to which the detonation flame arrester is attached. In addition, each outlet arrangement described in paragraph 14.3.1 shall be fitted with an optical device located no more than 8 inches from the detonation flame arrester outlet.[7]

14.3.3 Explosion pressures within the pipe shall be measured by a high frequency transducer situated in the test pipe no more than 8 inches from the run-up side of the housing of the detonation flame arrester.

14.3.4 Using the first end arrangement (10 pipe diameter outlet) described in paragraph 14.3.1, a series of tests shall be conducted to determine the test pipe length and configuration that results in the maximum unstable (overdriven) detonation having the maximum measured flame speed at the detonation flame arrester. (These tests may also be carried out using a single length of pipe with igniters spaced at varying distances from the arrester.) The flame speeds, explosion pressures and test pipe configurations shall be recorded for each of these tests. The piping configuration that resulted in the highest recorded unstable (overdriven) detonation flame speed shall be used, and the device shall be subjected to at least four additional unstable (overdriven) detonations. In the course of testing, the device shall also demonstrate its ability to withstand five stable detonations, five deflagrations (as determined by flame speed) where $\Delta P/P_o$ was less than 1 and five deflagrations (as determined by flame speed) where $\Delta P/P_o$ was greater than 1 but less than 10. Initiation of deflagrations shall be at several locations to generate a range for $\Delta P/P_o$. Deflagration tests using the restricted outlet arrangement described in paragraph 14.3.1 shall then be conducted. In these tests the device shall demonstrate its ability to stop five deflagrations (as determined by flame speed) generated by the same configurations which resulted in $\Delta P/P_o$ being less than 1 during the deflagration tests which were conducted without the restricted end arrangements, and five deflagrations (as determined by flame speed) generated by the same configurations which resulted in $\Delta P/P_o$ being greater than 1 but less than 10 during the deflagration tests which were conducted without the restricted end arrangements. No evidence of flame passage shall occur during these tests. The flame speeds and explosion pressures for each of these tests shall be recorded.

14.3.5 A device that successfully passes the tests of 14.3.4 shall be considered to be directional (suitable for arresting a detonation advancing only from the direction as tested) except;

14.3.5.1 A device may be tested according to 14.3.4 for detonations approaching from either direction, or

14.3.5.2 The design of the device is symmetrical where each end may be considered to be identical when approached by a detonation from either direction.

[1] Available from the American Society for Testing and Materials (ASTM), 100 Barr Harbor Dr., West Conshohocken, PA 19428–2959.

[2] Available from the American Society of Mechanical Engineers International, Three Park Avenue, New York, NY 10016–5990.

[3] Available from the International Maritime Organization, 4 Albert Embankment, London SE1 7SR, England.

[4] Available from the International Electrotechnical Commission, 1 rue de Varembe, Geneva, Switzerland.

[5] See IEC Publication 79–1.

[6] Some data are available for the estimation of flame speeds in horizontal pipes without detonation flame arresters. Some data indicate that the presence of small obstacles, fittings or bends in the test pipe can accelerate the flame speeds appreciably.

[7] Other pressure and/or flame speed measuring techniques may be used if effective.

FIGURE 1

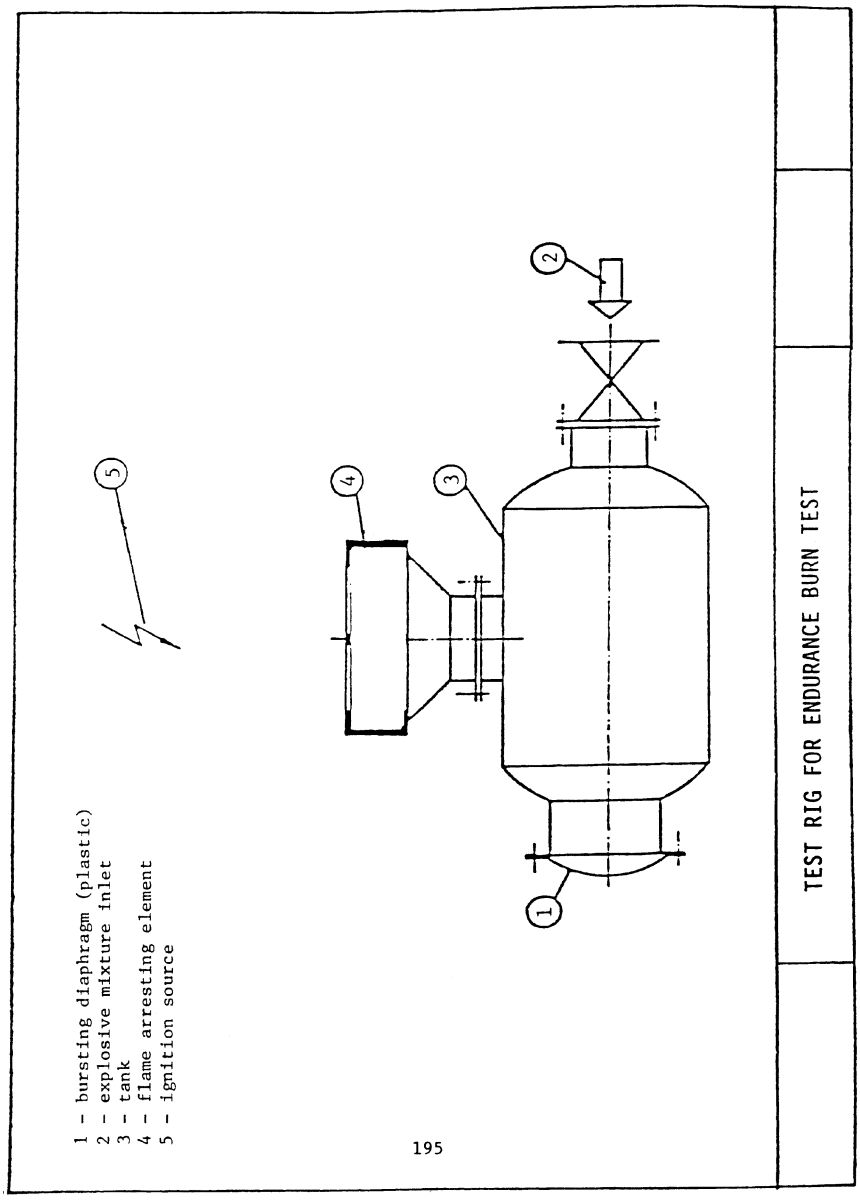
1 - bursting diaphragm (plastic)
2 - explosive mixture inlet
3 - tank
4 - flame arresting element
5 - ignition source
1
2
3
4
5
195
TEST RIG FOR ENDURANCE BURN TEST

Figure 2

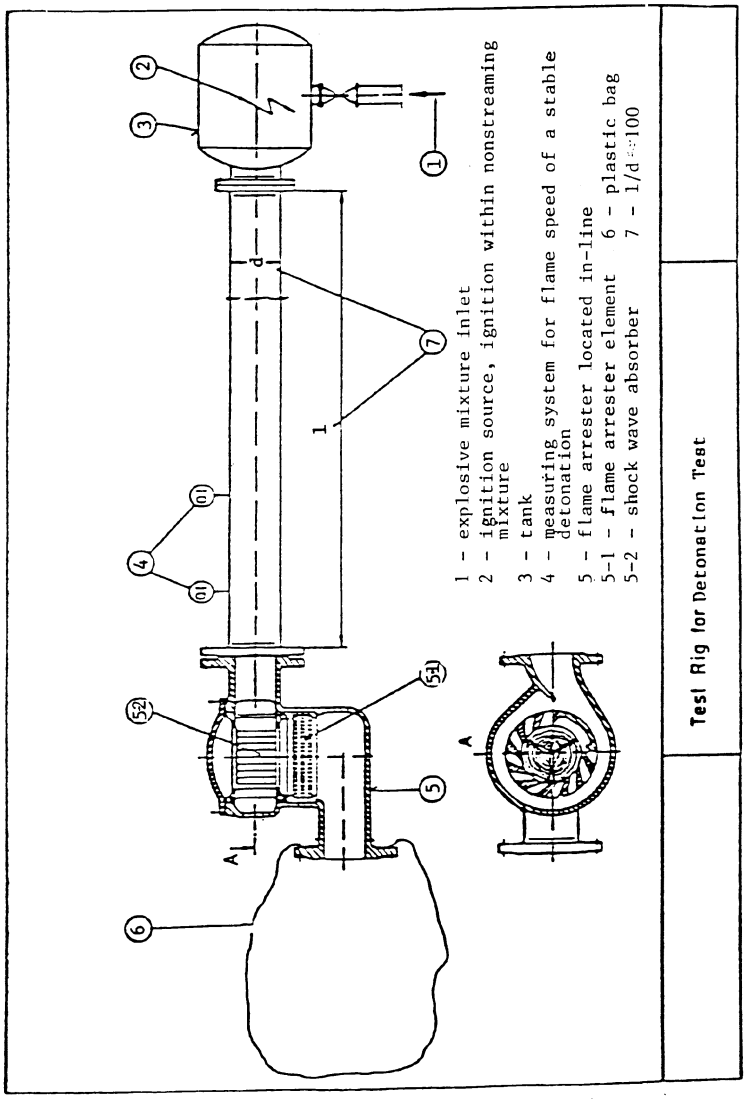
1 - explosive mixture inlet
2 - ignition source, ignition within nonstreaming mixture
3 - tank
4 - measuring system for flame speed of a stable detonation
5 - flame arrester located in-line
5-1 - flame arrester element
6 - plastic bag
5-2 - shock wave absorber
7 - 1/d=100
Test Rig for Detonation Test

196

ATTACHMENT 1

Inflammable gas or vapour	Experimental maximum safe gap	
	mm	in.
Methane	1.170	0.046
Blast furnace gas	1.193	0.047
Propane	0.965	0.038
Butane	1.066	0.042
Pentane	1.016	0.040
Hexane	0.965	0.038
Heptane	0.965	0.038
Iso-octane	1.040	0.041
Decane	1.016	0.040
Benzene	0.99	0.039
Xylene	1.066	0.042
Cyclohexane	0.94	0.037
Acetone	1.016	0.040
Ethylene	0.71	0.028
Methyl-ethyl-ketone	1.016	0.040
Carbon monoxide	0.915	0.036
Methyl-acetate	0.990	0.039
Ethyl-acetate	1.04	0.041
Propyl-acetate	1.04	0.041
Butyl-acetate	1.016	0.040
Amyl-acetate	0.99	0.039
Methyl alcohol	0.915	0.036
Ethyl alcohol	1.016	0.040
Iso-butyl-alcohol	0.965	0.038
Butyl-alcohol (Normal)	0.94	0.037
Amyl-alcohol	0.99	0.039
Ethyl-ether	0.864	0.034
Coal gas (H_2 57%)	0.482	0.019
Acetylene	≤0.025	≤0.001
Carbon disulphide	0.203	0.008
Hydrogen	0.102	0.004
Blue water gas (H_2 53% CO 47%)	0.203	0.008
Ethyl nitrate	≤0.025	≤0.001
Ammonia	[1] 3.33	[1] 0.133
Ethylene oxide	0.65	0.026
Ethyl nitrite	0.922	0.038

[1] Approximately.

[CGD 88–102, 55 FR 25435, June 21, 1990; 55 FR 39270, Sept. 26, 1990, as amended by CGD 96–026, 61 FR 33666, June 28, 1996; USCG–1999–5832, 64 FR 34715, June 29, 1999; USCG–2000–7223, 65 FR 40058, June 29, 2000; USCG–2010–0351, 75 FR 36284, June 25, 2010; USCG–1999–5150, 78 FR 42641, July 16, 2013]

APPENDIX B TO PART 154 [RESERVED]

APPENDIX C TO PART 154—GUIDELINES FOR DETERMINING AND EVALUATING REQUIRED RESPONSE RESOURCES FOR FACILITY RESPONSE PLANS

1. Purpose

1.1 The purpose of this appendix is to describe the procedures for identifying response resources to meet the requirements of subpart F of this part. These guidelines will be used by the facility owner or operator in preparing the response plan and by the Captain of the Port (COTP) when reviewing them. Response resources identified in subparts H and I of this part should be selected using the guidelines in section 2 and Table 1 of this appendix.

2. Equipment Operability and Readiness

2.1 All equipment identified in a response plan must be designed to operate in the conditions expected in the facility's geographic area. These conditions vary widely based on location and season. Therefore, it is difficult to identify a single stockpile of response equipment that will function effectively in each geographic location.

2.2 Facilities handling, storing, or transporting oil in more than one operating environment as indicated in Table 1 of this appendix must identify equipment capable of successfully functioning in each operating environment.

2.3 When identifying equipment for response plan credit, a facility owner or operator must consider the inherent limitations in the operability of equipment components and response systems. The criteria in Table 1 of this appendix should be used for evaluating the operability in a given environment. These criteria reflect the general conditions in certain operating areas.

2.3.1 The Coast Guard may require documentation that the boom identified in a response plan meets the criteria in Table 1. Absent acceptable documentation, the Coast Guard may require that the boom be tested to demonstrate that it meets the criteria in Table 1. Testing must be in accordance with ASTM F 715 (incorporated by reference, see §154.106), or other tests approved by the Coast Guard.

2.4 Table 1 of this appendix lists criteria for oil recovery devices and boom. All other equipment necessary to sustain or support response operations in the specified operating environment must be designed to function in the same conditions. For example, boats which deploy or support skimmers or boom must be capable of being safely operated in the significant wave heights listed for the applicable operating environment.

2.5 A facility owner or operator must refer to the applicable local contingency plan or ACP, as appropriate, to determine if ice, debris, and weather-related visibility are significant factors in evaluating the operability of equipment. The local contingency plan or ACP will also identify the average temperature ranges expected in the facility's operating area. All equipment identified in a response plan must be designed to operate within those conditions or ranges.

2.6 The requirements of subparts F, G, H and I of this part establish response resource mobilization and response times. The distance of the facility from the storage location of the response resources must be used to determine whether the resources can arrive on scene within the stated time. A facility owner or operator shall include the time for notification, mobilization, and travel time of response resources identified to meet the maximum most probable discharge and

Tier 1 worst case discharge response time requirements. For subparts F and G, tier 2 and 3 response resources must be notified and mobilized as necessary to meet the requirements for arrival on scene in accordance with §154.1045 or §154.1047 of subpart F, or §154.1135 of subpart G, as appropriate. An on water speed of 5 knots and a land speed of 35 miles per hour is assumed unless the facility owner or operator can demonstrate otherwise.

2.7 For subparts F and G, in identifying equipment, the facility owner or operator shall list the storage location, quantity, and manufacturer's make and model. For oil recovery devices, the effective daily recovery capacity, as determined using section 6 of this appendix must be included. For boom, the overall boom height (draft plus freeboard) should be included. A facility owner or operator is responsible for ensuring that identified boom has compatible connectors.

2.8 For subparts H and I, in identifying equipment, the facility owner or operator shall list the storage location, quantity, and manufacturer's make and model. For boom, the overall boom height (draft plus freeboard) should be included. A facility owner or operator is responsible for ensuring that identified boom has compatible connectors.

3. Determining Response Resources Required for the Average Most Probable Discharge

3.1 A facility owner or operator shall identify sufficient response resources available, through contract or other approved means as described in §154.1028(a), to respond to the average most probable discharge. The equipment must be designed to function in the operating environment at the point of expected use.

3.2 The response resources must include:

3.2.1 1,000 feet of containment boom or two times the length of the largest vessel that regularly conducts oil transfers to or from the facility, whichever is greater, and a means deploying it available at the spill site within 1 hour of the discovery of a spill.

3.2.2 Oil recovery devices with an effective daily recovery capacity equal to the amount of oil discharged in an average most probable discharge or greater available at the facility within 2 hours of the detection of an oil discharge.

3.2.3 Oil storage capacity for recovered oily material indicated in section 9.2 of this appendix.

4. Determining Response Resources Required for the Maximum Most Probable Discharge

4.1 A facility owner or operator shall identify sufficient response resources available, by contract or other approved means as described in §154.1028(a), to respond to discharges up to the maximum most probable discharge volume for that facility. This will require response resources capable of containing and collecting up to 1,200 barrels of oil or 10 percent of the worst case discharge, whichever is less. All equipment identified must be designed to operate in the applicable operating environment specified in Table 1 of this appendix.

4.2 Oil recovery devices identified to meet the applicable maximum most probable discharge volume planning criteria must be located such that they arrive on scene within 6 hours in higher volume port areas (as defined in §154.1020) and the Great Lakes and within 12 hours in all other areas.

4.3 Because rapid control, containment, and removal of oil is critical to reduce spill impact, the effective daily recovery capacity for oil recovery devices must equal 50 percent of the planning volume applicable for the facility as determined in section 4.1 of this appendix. The effective daily recovery capacity for oil recovery devices identified in the plan must be determined using the criteria in section 6 of this appendix.

4.4 In addition to oil recovery capacity, the plan must identify sufficient quantities of containment boom available, by contract or other approved means as described in §154.1028(a), to arrive within the required response times for oil collection and containment and for protection of fish and wildlife and sensitive environments. While the regulation does not set required quantities of boom for oil collection and containment, the response plan must identify and ensure, by contract or other approved means as described in §154.1028(a), the availability of the boom identified in the plan for this purpose.

4.5 The plan must indicate the availability of temporary storage capacity to meet the guidelines of section 9.2 of this appendix. If available storage capacity is insufficient to meet this level, then the effective daily recovery capacity must be derated to the limits of the available storage capacity.

4.6 The following is an example of a maximum most probable discharge volume planning calculation for equipment identification in a higher volume port area: The facility's worst case discharge volume is 20,000 barrels. Ten percent of this is 2,000 barrels. Since this is greater than 1,200 barrels, 1,200 barrels is used as the planning volume. The effective daily recovery capacity must be 50 percent of this, or 600 barrels per day. The ability of oil recovery devices to meet this capacity will be calculated using the procedures in section 6 of this appendix. Temporary storage capacity available on scene must equal twice the daily recovery rate as indicated in section 9 of this appendix, or 1,200 barrels per day. This is the information the facility owner or operator will use to identify and ensure the availability of, through contract or other approved means as

described in §154.1028(a), the required response resources. The facility owner will also need to identify how much boom is available for use.

5. Determining Response Resources Required for the Worst Case Discharge to the Maximum Extent Practicable

5.1 A facility owner or operator shall identify and ensure availability of, by contract or other approved means, as described in §154.1028(a), sufficient response resources to respond to the worst case discharge of oil to the maximum extent practicable. Section 7 of this appendix describes the method to determine the required response resources.

5.2 Oil spill response resources identified in the response plan and available through contract or other approved means, as described in §154.1028(a), to meet the applicable worst case discharge planning volume must be located such that they can arrive at the scene of a discharge within the times specified for the applicable response tiers listed in §154.1045.

5.3 The effective daily recovery capacity for oil recovery devices identified in a response plan must be determined using the criteria in section 6 of this appendix. A facility owner or operator shall identify the storage locations of all response resources that must be used to fulfill the requirements for each tier. The owner or operator of a facility whose required daily recovery capacity exceeds the applicable response capability caps in Table 5 of this appendix shall identify sources of additional equipment, their locations, and the arrangements made to obtain this equipment during a response. The owner or operator of a facility whose calculated planning volume exceeds the applicable contracting caps in Table 5 shall identify sources of additional equipment equal to twice the cap listed in Tiers 1, 2, and 3 or the amount necessary to reach the calculated planning volume, whichever is lower. The resources identified above the cap must be capable of arriving on scene not later than the Tiers 1, 2, and 3 response times in §154.1045. No contract is required. While general listings of available response equipment may be used to identify additional sources, a response plan must identify the specific sources, locations, and quantities of equipment that a facility owner or operator has considered in his or her planning. When listing Coast Guard classified oil spill removal organization(s) which have sufficient removal capacity to recover the volume above the response capability cap for the specific facility, as specified in Table 5 of this appendix, it is not necessary to list specific quantities of equipment.

5.4 A facility owner or operator shall identify the availability of temporary storage capacity to meet the requirements of section 9.2 of this appendix. If available storage capacity is insufficient to meet this requirement, then the effective daily recovery capacity must be derated to the limits of the availabile storage capacity.

5.5 When selecting response resources necessary to meet the response plan requirements, the facility owner or operator must ensure that a portion of those resources are capable of being used in close-to-shore response activities in shallow water. The following percentages of the on-water response equipment identified for the applicable geographic area must be capable of operating in waters of 6 feet or less depth:

(i) Offshore—10 percent

(ii) Nearshore/inland/Great Lakes/rivers and canals—20 percent.

5.6 In addition to oil spill recovery devices, a facility owner or operator shall identify sufficient quantities of boom that are available, by contract or other approved means as described in §154.1028(a), to arrive on scene within the required response times for oil containment and collection. The specific quantity of boom required for collection and containment will depend on the specific recovery equipment and strategies employed. A facility owner or operator shall also identify sufficient quantities of oil containment boom to protect fish and wildlife and sensitive environments for the number of days and geographic areas specified in Table 2. Sections 154.1035(b)(4)(iii) and 154.1040(a), as appropriate, shall be used to determine the amount of containment boom required, through contract or other approved means as described in §154.1028(a), to protect fish and wildlife and sensitive environments.

5.7 A facility owner or operator must also identify, through contract or other approved means as described in §154.1028(a), the availability of an oil spill removal organization capable of responding to a shoreline cleanup operation involving the calculated volume of oil and emulsified oil that might impact the affected shoreline. The volume of oil that must be planned for is calculated through the application of factors contained in Tables 2 and 3. The volume calculated from these tables is intended to assist the facility owner or operator in identifying a contractor with sufficient resources and expertise. This planning volume is not used explicitly to determine a required amount of equipment and personnel.

6. Determining Effective Daily Recovery Capacity for Oil Recovery Devices

6.1 Oil recovery devices identified by a facility owner or operator must be identified by manufacturer, model, and effective daily recovery capacity. These rates must be used to determine whether there is sufficient capacity to meet the applicable planning critieria for the average most probable discharge, maximum most probable discharge,

and worst case discharge to the maximum extent practicable.

6.2 For the purpose of determining the effective daily recovery capacity of oil recovery devices, the formula listed in section 6.2.1 of this appendix will be used. This method considers potential limitations due to available daylight, weather, sea state, and percentage of emulsified oil in the recovered material. The Coast Guard may assign a lower efficiency factor to equipment listed in a response plan if it determines that such a reduction is warranted.

6.2.1 The following formula must be used to calculate the effective daily recovery capacity:

R=T×24 hours×E

R=Effective daily recovery capacity

T=Throughout rate in barrels per hour (nameplate capacity)

E=20 percent Efficiency factor (or lower factor as determined by Coast Guard)

6.2.2 For those devices in which the pump limits the throughput of liquid, throughput rate will be calculated using the pump capacity.

6.2.3 For belt or mop type devices, the throughput rate will be calculated using the speed of the belt or mop through the device, assumed thickness of oil adhering to or collected by the device, and surface area of the belt or mop. For purposes of this calculation, the assumed thickness of oil will be ¼ inch.

6.2.4 Facility owners or operators including oil recovery devices whose throughput is not measurable using a pump capacity or belt/mop speed may provide information to support an alternative method of calculation. This information must be submitted following the procedures in paragraph 6.3.2 of this appendix.

6.3 As an alternative to 6.2, a facility owner or operator may submit adequate evidence that a different effective daily recovery capacity should be applied for a specific oil recovery device. Adequate evidence is actual verified performance data in spill conditions or tests using ASTM F 631 (incorporated by reference, see §154.106), or an equivalent test approved by the Coast Guard.

6.3.1 The following formula must be used to calculate the effective daily recovery capacity under this alternative:

R=D×U

R=Effective daily recovery capacity

D=Average Oil Recovery Rate in barrels per hour (Item 26 in ASTM F 808; Item 13.2.16 in ASTM F 631; or actual performance data)

U=Hours per day that a facility owner or operator can document capability to operate equipment under spill conditions. Ten hours per day must be used unless a facility owner or operator can demonstrate that the recovery operation can be sustained for longer periods.

6.3.2 A facility owner or operator proposing a different effective daily recovery rate for use in a response plan shall provide data for the oil recovery devices listed. The following is an example of these calculations:

A weir skimmer identified in a response plan has a manufacturer's rated throughput at the pump of 267 gallons per minute (gpm).

267 gpm=381 barrels per hour

R=381×24×.2=1829 barrels per day

After testing using ASTM procedures, the skimmer's oil recovery rate is determined to be 220 gpm. The facility owner of operator identifies sufficient response resources available to support operations 12 hours per day.

220 gpm=314 barrels per hour

R=314×12=3768 barrels per day

The facility owner or operator will be able to use the higher rate if sufficient temporary oil storage capacity is available. Determinations of alternative efficiency factors under paragraph 6.2 or alternative effective daily recovery capacities under paragraph 6.3 of this appendix will be made by Commandant, (CG–535), 2100 2nd St., SW., Stop 7363, Washington, DC 20593–7363. Response contractors or equipment manufacturers may submit required information on behalf of multiple facility owners or operators directly in lieu of including the request with the response plan submission.

7. Calculating the Worst Case Discharge Planning Volumes

7.1 The facility owner or operator shall plan for a response to a facility's worst case discharge. The planning for on-water recovery must take into account a loss of some oil to the environment due to evaporative and natural dissipation, potential increases in volume due to emulsification, and the potential for deposit of some oil on the shoreline.

7.2 The following procedures must be used to calculate the planning volume used by a facility owner or operator for determining required on water recovery capacity:

7.2.1 The following must be determined: The worst case discharge volume of oil in the facility; the appropriate group(s) for the type of oil handled, stored, or transported at the facility (non-persistent (Group I) or persistent (Groups II, III, or IV)); and the facility's specific operating area. Facilities which handle, store, or transport oil from different petroleum oil groups must calculate each group separately. This information is to be used with Table 2 of this appendix to determine the percentages of the total volume to be used for removal capacity planning. This table divides the volume into three categories: Oil lost to the environment; oil deposited on the shoreline; and oil available for on-water recovery.

7.2.2 The on-water oil recovery volume must be adjusted using the appropriate

emulsification factor found in Table 3 of this appendix. Facilities which handle, store, or transport oil from different petroleum groups must assume that the oil group resulting in the largest on-water recovery volume will be stored in the tank or tanks identified as constituting the worst case discharge.

7.2.3 The adjusted volume is multiplied by the on-water oil recovery resource mobilization favor found in Table 4 of this appendix from the appropriate operating area and response tier to determine the total on-water oil recovery capacity in barrels per day that must be identified or contracted for to arrive on-scene with the applicable time for each response tier. Three tiers are specified. For higher volume port areas, the contracted tiers of resources must be located such that they can arrive on scene within 6, 30, and 54 hours of the discovery of an oil discharge. For all other river, inland, nearshore, offshore areas, and the Great Lakes, these tiers are 12, 36, and 60 hours.

7.2.4 The resulting on-water recovery capacity in barrels per day for each tier must be used to identify response resources necessary to sustain operations in the applicable operating area. The equipment must be capable of sustaining operations for the time period specified in Table 2 of this appendix. The facility owner or operator must identify and ensure the availability, through contract or other approved means as described in §154.1028(a), of sufficient oil spill recovery devices to provide the effective daily recovery oil recovery capacity required. If the required capacity exceeds the applicable cap specified in Table 5 of this appendix, then a facility owner or operator shall ensure, by contract or other approved means as described in §154.1028(a), only for the quantity of resources required to meet the cap, but shall identify sources of additional resources as indicated in §154.1045(m). The owner or operator of a facility whose planning volume exceeds the cap for 1993 must make arrangements to identify and ensure the availability, through contract or other approved means as described in §154.1028(a), of the additional capacity in 1998 or 2003, as appropriate. For a facility that handles, stores, or transports multiple groups of oil, the required effective daily recovery capacity for each group is calculated before applying the cap.

7.3 The following procedures must be used to calculate the planning volume for identifying shoreline cleanup capacity:

7.3.1 The following must be determined: The worst case discharge volume of oil for the facility; the appropriate group(s) for the type of oil handled, stored, or transported at the facility (non-persistent (Group I) or persistent (Groups II, III, or IV)); and the operating area(s) in which the facility operates. For a facility storing oil from different groups, each group must be calculated separately. Using this information, Table 2 of this appendix must be used to determine the percentages of the total planning volume to be used for shoreline cleanup resource planning.

7.3.2 The shoreline cleanup planning volume must be adjusted to reflect an emulsification factor using the same procedure as described in section 7.2.2.

7.3.3 The resulting volume will be used to identify an oil spill removal organization with the appropriate shoreline cleanup capability.

7.3.4 The following is an example of the procedure described above: A facility receives oil from barges via a dock located on a bay and transported by piping to storage tanks. The facility handles Number 6 oil (specific gravity .96) and stores the oil in tanks where it is held prior to being burned in an electric generating plant. The MTR segment of the facility has six 18-inch diameter pipelines running one mile from the dock-side manifold to several storage tanks which are located in the non-transportation-related portion of the facility. Although the facility piping has a normal working pressure of 100 pounds per square inch, the piping has a maximum allowable working pressure (MAWP) of 150 pounds per square inch. At MAWP, the pumping system can move 10,000 barrels (bbls) of Number 6 oil every hour through each pipeline. The facility has a roving watchman who is required to drive the length of the piping every 2 hours when the facility is receiving oil from a barge. The facility operator estimates that it will take approximately 10 minutes to secure pumping operations when a discharge is discovered. Using the definition of worst case discharge provided in §154.1029(b)(ii), the following calculation is provided:

2 hrs + 0.17 hour × 10,000 bbls per hour	21,700
Piping volume = 37,322 ft^3 ÷ 5.6 ft^3/bbl	+6,664
Discharge volume per pipe	28,364
Number of pipelines	×6
Worst case discharge from MTR facility	170,184

To calculate the planning volumes for onshore recovery:

Worst case discharge: 170,184 bbls. Group IV oil

Emulsification factor (from Table 3): 1.4

Operating Area impacted: Inland

Planned percent oil onshore recovery (from Table 2): Inland 70%

Planning volumes for onshore recovery: Inland 170,184 ×.7 × 1.4 = 166,780 bbls.

Conclusion: The facility owner or operator must contract with a response resource capable of managing a 166,780 barrel shoreline cleanup.

To calculate the planning volumes for onwater recovery:

Worst case discharge: 170,184 bbls. Group IV oil

Emulsification factor (from Table 3): 1.4

Operating Area impacted: Inland

Planned percent oil on-water recovery (from Table 2): Inland 50%

Planning volumes for on-water recovery: Inland 170,184×.5×1.4 = 119,128 bbls.

To determine the required resources for on-water recovery for each tier, use the mobilization factors from Table 4:

	Tier 1	Tier 2	Tier 3
Inland = 119,128 bbls.	× .15	× .25	× .40
Barrels per day (pbd)	17,869	29,782	47,652

Conclusion: Since the requirements for all tiers for inland exceed the caps, the facility owner will only need to contract for 10,000 bpd for Tier 1, 20,000 bpd for Tier 2, and 40,000 bpd for Tier 3. Sources for the bpd on-water recovery resources above the caps for all three Tiers need only be identified in the response plan.

Twenty percent of the capability for Inland, for all tiers, must be capable of operating in water with a depth of 6 feet or less.

The facility owner or operator will also be required to identify or ensure, by contract or other approved means as described in §154.1028(a), sufficient response resources required under §§154.1035(b)(4) and 154.1045(k) to protect fish and wildlife and sensitive environments identified in the response plan for the worst case discharge from the facility.

The COTP has the discretion to accept that a facility can operate only a limited number of the total pipelines at a dock at a time. In those circumstances, the worst case discharge must include the drainage volume from the piping normally not in use in addition to the drainage volume and volume of oil discharged during discovery and shut down of the oil discharge from the operating piping.

8. Determining the Capability of High-Rate Response Methods

8.1. Calculate cumulative dispersant application capacity as follows:

8.1.1 A facility owner or operator must plan either for a dispersant capacity to respond to a facility's worst case discharge (WCD) of oil, or for the amount of the dispersant resource cap as required by §154.1045(i)(3) of this chapter, whichever is the lesser amount. When planning for the cumulative application capacity required, the calculations must account for the loss of some oil to the environment due to natural dissipation causes (primarily evaporation). The following procedure must be used to determine the cumulative application requirements:

8.1.2 Determine the WCD volume of oil in gallons and the appropriate oil group for the type of petroleum oil (persistent Groups II, III, and IV). For facilities with mixed petroleum oils, assume a total WCD volume using the group that constitutes the largest portion of the oil being handled or the group with the smallest natural dissipation factor;

8.1.3 Multiply the total WCD amount in gallons by the natural dissipation factor for the appropriate oil group as follows: Group II factor is 0.50; Group III is 0.30; and Group IV is 0.10. This represents the amount of oil that can be expected to be lost to natural dissipation in a nearshore environment. Subtract the oil amount lost to natural dissipation from the total WCD amount to determine the remaining oil available for treatment by dispersant application; and

8.1.4 Multiply the oil available for dispersant treatment by the dispersant-to-oil planning application ratio of 1 part dispersant to 20 parts oil (0.05). The resulting number represents the cumulative total dispersant-application capability that must be ensured available within the first 60 hours.

8.1.5(i) The following is an example of the procedure described in paragraphs 8.1.1 through 8.1.4 above: A facility with a 1,000,000 gallon WCD of crude oil (specific gravity 0.87) is located in an area with pre-authorization for dispersant use in the nearshore environment on the U.S. East Coast:

WCD: 1,000,000 gallons, Group III oil.

Natural dissipation factor for Group III: 30 percent.

General formula to determine oil available for dispersant treatment: (WCD) − [(WCD) × (natural dissipation factor)] = available oil.

E.g., 1,000,000 gal − (1,000,000 gal × .30) = 700,000 gallons of available oil.

Cumulative application capacity = Available oil × planning application ratio (1 gal dispersant/20 gals oil = 0.05).

E.g., 700,000 gal oil × (0.05) = 35,000 gallons cumulative dispersant-application capacity.

(ii) The requirements for cumulative dispersant-application capacity (35,000 gallons) for this facility's WCD is less than the overall dispersant capability for non-Gulf Coast waters required by §155.1045(i)(3) of this chapter. Because paragraph 8.1.1 of this appendix requires owners and operators to ensure the availability of the lesser of a facility's dispersant requirements for WCD or the amount of the dispersant cap provided for in §154.1045(i)(3), the facility in this example would be required to ensure the availability of 35,000 gallons of dispersant. More specifically, this facility would be required to meet the following tier requirements in §154.1045(i)(3), which total 35,000 gallons application:

Tier 1—4,125 gallons—Completed in 12 hours.

Tier 2—23,375 gallons—Completed in 36 hours.

Tier 3—7,500 gallons—Completed in 60 hours.

8.2 Determine Effective Daily Application Capacities (EDACs) for dispersant response systems as follows:

8.2.1 EDAC planning estimates for compliance with the dispersant application requirements in §154.1045(i)(3) are to be based on:

8.2.1.1 The spill occurring at the facility;

8.2.1.2 Specific dispersant application platform operational characteristics identified in the Dispersant Mission Planner 2 or as demonstrated by operational tests;

8.2.1.3 Locations of primary dispersant staging sites; and

8.2.1.4 Locations and quantities of dispersant stockpiles.

8.2.2 EDAC calculations with supporting documentation must be submitted to the NSFCC for classification as a Dispersant Oil Spill Removal Organization.

8.2.3(i) EDAC can also be calculated using the Dispersant Mission Planner 2 (DMP2). The DMP2 is a downloadable application that calculates EDAC for different dispersant response systems. It is located on the Internet at: *http://www.response.restoration.noaa.gov/spilltools*.

(ii) The DMP2 contains operating information for the vast majority of dispersant application platforms, including aircraft, both rotary and fixed wing, and vessels. The DMP2 produces EDAC estimates by performing calculations based on performance parameters of dispersant application platforms, locations of primary dispersant staging sites, home-based airport or port locations, and the facility location (for the spill site).

8.2.4 For each Captain of the Port zone where a dispersant response capability is required, the response plan must identify:

8.2.4.1 The type, number, and location of each dispersant-application platform intended for use to meet dispersant delivery requirements specified in §154.1045(i)(3) of this chapter;

8.2.4.2 The amount and location of available dispersant stockpiles to support each platform; and,

8.2.4.3 A primary staging site for each platform that will serve as its base of operations for the duration of the response.

8.3 In addition to the equipment and supplies required, a facility owner or operator must identify a source of support to conduct the monitoring and post-use effectiveness evaluation required by applicable regional plans and ACPs.

8.4 Identification of the resources for dispersant application does not imply that the use of this technique will be authorized. Actual authorization for use during a spill response will be governed by the provisions of the National Oil and Hazardous Substances Contingency Plan (40 CFR part 300) and the applicable Local or Area Contingency Plan.

9. Additional Equipment Necessary To Sustain Response Operations

9.1 A facility owner or operator is responsible for ensuring that sufficient numbers of trained personnel and boats, aerial spotting aircraft, containment boom, sorbent materials, boom anchoring materials, and other supplies are available to sustain response operations to completion. All such equipment must be suitable for use with the primary equipment identified in the response plan. A facility owner or operator is not required to list these response resources, but shall certify their availability.

9.2 A facility owner or operator shall evaluate the availability of adequate temporary storage capacity to sustain the effective daily recovery capacities from equipment identified in the plan. Because of the inefficiencies of oil spill recovery devices, response plans must identify daily storage capacity equivalent to twice the effective daily recovery rate required on scene. This temporary storage capacity may be reduced if a facility owner or operator can demonstrate by waste stream analysis that the efficiencies of the oil recovery devices, ability to decant waste, or the availability of alternative temporary storage or disposal locations will reduce the overall volume of oily material storage requirement.

9.3 A facility owner or operator shall ensure that his or her planning includes the capability to arrange for disposal of recovered oil products. Specific disposal procedures will be addressed in the applicable ACP.

TABLE 1—RESPONSE RESOURCE OPERATING CRITERIA OIL RECOVERY DEVICES

Operating environment	Significant wave height [1]	Sea State
Rivers and Canals	≤1 Foot	1
Inland	≤3 feet	2
Great Lakes	≤4 feet	2–3
Ocean	≤6 feet	3–4

BOOM

Boom property	Use			
	Rivers and canals	Inland	Great Lakes	Ocean
Significant Wave Height [1]	≤1	≤3	≤4	≤6
Sea State	1	2	2–3	3–4
Boom height—in. (draft plus freeboard)	6–18	18–42	18–42	≤42
Reserve Buoyancy to Weight Ratio	2:1	2:1	2:1	3:1 to 4:1
Total Tensile Strength—lbs.	4,500	15–20,000	15–20,000	≤20,000
Skirt Fabric Tensile Strength—lbs	200	300	300	500
Skirt Fabric Tear Strength—lbs	100	100	100	125

[1] Oil recovery devices and boom must be at least capable of operating in wave heights up to and including the values listed in Table 1 for each operating environment.

TABLE 2—REMOVAL CAPACITY PLANNING TABLE

Spill location	Rivers and canals			Nearshore/inland Great Lakes			Offshore		
Sustainability of on-water oil recovery	3 Days			4 Days			6 Days		
Oil group	% Natural dissipation	% Recovered floating oil	% Oil on shore	% Natural dissipation	% Recovered floating oil	% Oil on shore	% Natural dissipation	% Recovered floating oil	% Oil on shore
1 Non-persistent oils	80	10	10	80	20	10	95	5	/
2 Light crudes	40	15	45	50	50	30	75	25	5
3 Medium crudes and fuels	20	15	65	30	50	50	60	40	20
4 Heavy crudes and fuels	5	20	75	10	50	70	50	40	30

TABLE 3—EMULSIFICATION FACTORS FOR PETROLEUM OIL GROUPS

Non-Persistent Oil:	
Group I	1.0
Persistent Oil:	
Group II	1.8
Group III	2.0
Group IV	1.4

TABLE 4—ON WATER OIL RECOVERY RESOURCE MOBILIZATION FACTORS

Operating Area	Tier 1	Tier 2	Tier 3
Rivers & Canals	.30	.40	.60
Inland/Nearshore/Great Lakes	.15	.25	.40
Offshore	.10	.165	.21

Note: These mobilization factors are for total response resources mobilized, not incremental response resources.

TABLE 5—RESPONSE CAPABILITY CAPS BY OPERATING AREA

	Tier 1	Tier 2	Tier 3
February 18, 1993:			
All except rivers and canals, Great Lakes.	10K bbls/day	20K bbls/day	40K bbls/day/
Great Lakes	5K bbls/day	10K bbls/day	20K bbls/day.
Rivers and canals	1,500 bbls/day	3,000 bbls/day	6,000 bbls/day.
February 18, 1998:			
All except rivers and canals, Great Lakes.	12.5K bbls/day	25K bbls/day	50K bbls/day.
Great Lakes	6.25K bbls/day	12.3K bbls/day	25K bbls/day.
Rivers and canals	1,875 bbls/day	3,750 bbls/day	7,500 bbls/day.
February 18, 2003:			
All except rivers & canals & Great Lakes.	12.5K bbls/day	25K bbls/day	50K bbls/day.
Great Lakes	6.25K bbls/day	12.3K bbls/day	25K bbls/day.
Rivers & canals	1,875 bbls/day	3,750 bbls/day	7,500 bbls/day.

NOTE: The caps show cumulative overall effective daily recovery capacity, not incremental increases.
TBD = To be determined.

[CGD 91–036, 61 FR 7933, Feb. 29, 1996, as amended by CGD 96–026, 61 FR 33666, June 28, 1996; USCG–1999–5151, 64 FR 67175, Dec. 1, 1999; USCG–2000–7223, 65 FR 40058, June 29, 2000; USCG–2005–21531, 70 FR 36349, June 23, 2005; USCG–2001–8661, 74 FR 45025, Aug. 31, 2009; USCG–2010–0351, 75 FR 36284, June 25, 2010]

APPENDIX D TO PART 154—TRAINING ELEMENTS FOR OIL SPILL RESPONSE PLANS

1. General

1.1 The portion of the plan dealing with training is one of the key elements of a response plan. This concept is clearly expressed by the fact that Congress, in writing OPA 90, specifically included training as one of the sections required in a vessel or facility response plan. In reviewing submitted response plans, it has been noted that the plans often do not provide sufficient information in the training section of the plan for either the user or the reviewer of the plan. In some cases, plans simply state that the crew and others will be trained in their duties and responsibilities, with no other information being provided. In other plans, information is simply given that required parties will receive the necessary worker safety training (HAZWOPER).

1.2 The training section of the plan need not be a detailed course syllabus, but it must contain sufficient information to allow the user and reviewer (or evaluator) to have an understanding of those areas that are believed to be critical. Plans should identify key skill areas and the training that is required to ensure that the individual identified will be capable of performing the duties prescribed to them. It should also describe how the training will be delivered to the various personnel. Further, this section of the plan must work in harmony with those sections of the plan dealing with exercises, the spill management team, and the qualified individual.

1.3 The material in this appendix D is not all-inclusive and is provided for guidance only.

2. Elements To Be Addressed

2.1 To assist in the preparation of the training section of a facility response plan, some of the key elements that should be addressed are indicated in the following sections. Again, while it is not necessary that the comprehensive training program for the company be included in the response plan, it is necessary for the plan to convey the elements that define the program as appropriate.

2.2 An effective spill response training program should consider and address the following:

2.2.1 Notification requirements and procedures.

2.2.2 Communication system(s) used for the notifications.

2.2.3 Procedures to mitigate or prevent any discharge or a substantial threat of a discharge of oil resulting from failure of manifold, mechanical loading arm, or other transfer equipment or hoses, as appropriate;

2.2.3.1 Tank overfill;

2.2.3.2 Tank rupture;

2.2.3.3 Piping rupture;

2.2.3.4 Piping leak, both under pressure and not under pressure, if applicable;

2.2.3.5 Explosion or fire;

2.2.3.6 Equipment failure (e.g., pumping system failure, relief valve failure, or other general equipment relevant to operational activities associated with internal or external facility transfers).

2.2.4 Procedures for transferring responsibility for direction of response activities from facility personnel to the spill management team.

2.2.5 Familiarity with the operational capabilities of the contracted oil spill removal organizations and the procedures to notify the activate such organizations.

2.2.6 Familiarity with the contracting and ordering procedures to acquire oil spill removal organization resources.

2.2.7 Familiarity with the ACP(s).

2.2.8 Familiarity with the organizational structures that will be used to manage the response actions.

2.2.9 Responsibilities and duties of the spill management team members in accordance with designated job responsibilities.

2.2.10 Responsibilities and authority of the qualified individual as described in the facility response plan and company response organization.

2.2.11 Responsibilities of designated individuals to initiate a response and supervise response resources.

2.2.12 Actions to take, in accordance with designated job responsibilities, in the event of a transfer system leak, tank overflow, or suspected cargo tank or hull leak.

2.2.13 Information on the cargoes handled by the vessel or facility, including familiarity with—

2.2.13.1 Cargo material safety data sheets;

2.2.13.2 Chemical characteristic of the cargo;

2.2.13.3 Special handling procedures for the cargo;

2.2.13.4 Health and safety hazards associated with the cargo; and

2.2.13.5 Spill and firefighting procedures for cargo.

2.2.14 Occupational Safety and Health Administration requirements for worker health and safety (29 CFR 1910.120).

3. Further Considerations

In drafting the training section of the facility response plan, some further considerations are noted below (these points are raised simply as a reminder):

3.1 The training program should focus on training provided to facility personnel.

3.2 An organization is comprised of individuals, and a training program should be structured to recognize this fact by ensuring

that training is tailored to the needs of the individuals involved in the program.

3.3 An owner or operator may identify equivalent work experience which fulfills specific training requirements.

3.4 The training program should include participation in periodic announced and unannounced exercises. This participation should approximate the actual roles and responsibilities of individual specified in the plan.

3.5 Training should be conducted periodically to reinforce the required knowledge and to ensure an adequate degree of preparedness by individuals with responsibilities under the facility response plan.

3.6 Training may be delivered via a number of different means; including classroom sessions, group discussions, video tapes, self-study workbooks, resident training courses, on-the-job training, or other means as deemed appropriate to ensure proper instruction.

3.7 New employees should complete the training program prior to being assigned job responsibilities which require participation in emergency response situations.

4. Conclusion

The information in this appendix is only intended to assist response plan preparers in reviewing the content of and in modifying the training section of their response plans. It may be more comprehensive than is needed for some facilities and not comprehensive enough for others. The Coast Guard expects that plan preparers have determined the training needs of their organizations created by the development of the response plans and the actions identified as necessary to increase the preparedness of the company and its personnel to respond to actual or threatened discharges of oil from their facilities.

[CGD 91–036, 61 FR 7938, Feb. 29, 1996]

PART 155—OIL OR HAZARDOUS MATERIAL POLLUTION PREVENTION REGULATIONS FOR VESSELS

Subpart A—General

Sec.
155.100 Applicability.
155.110 Definitions.
155.120 Equivalents.
155.130 Exemptions.
155.140 Incorporation by reference.

Subpart B—Vessel Equipment

155.200 Definitions.
155.205 Discharge removal equipment for vessels 400 feet or greater in length.
155.210 Discharge removal equipment for vessels less than 400 feet in length.
155.215 Discharge removal equipment for inland oil barges.
155.220 Discharge removal equipment for vessels carrying oil as secondary cargo.
155.225 Internal cargo transfer capability.
155.230 Emergency control systems for tank barges.
155.235 Emergency towing capability for oil tankers.
155.240 Damage stability information for oil tankers and offshore oil barges.
155.245 Damage stability information for inland oil barges.
155.310 Containment of oil and hazardous material cargo discharges.
155.320 Fuel oil and bulk lubricating oil discharge containment.
155.330 Oily mixture (bilge slops)/fuel oil tank ballast water discharges on U.S. non-oceangoing ships.
155.350 Oily mixture (bilge slops)/fuel oil tank ballast water discharges on oceangoing ships of less than 400 gross tons.
155.360 Oily mixture (bilge slops) discharges on oceangoing ships of 400 gross tons and above but less than 10,000 gross tons, excluding ships that carry ballast water in their fuel oil tanks.
155.370 Oily mixture (bilge slops)/fuel oil tank ballast water discharges on oceangoing ships of 10,000 gross tons and above and oceangoing ships of 400 gross tons and above that carry ballast water in their fuel oil tanks.
155.380 Oily water separating equipment and bilge alarm approval standards.
155.400 Platform machinery space drainage on oceangoing fixed and floating drilling rigs and other platforms.
155.410 Pumping, piping and discharge requirements for U.S. non-oceangoing ships of 100 gross tons and above.
155.420 Pumping, piping and discharge requirements for oceangoing ships of 100 gross tons and above but less than 400 gross tons.
155.430 Standard discharge connections for oceangoing ships of 400 gross tons and above.
155.440 Segregation of fuel oil and ballast water on new oceangoing ships of 4,000 gross tons and above, other than oil tankers, and on new oceangoing oil tankers of 150 gross tons and above.
155.450 Placard.
155.470 Prohibited spaces.
155.480 Overfill devices.
155.490 [Reserved]

Subpart C—Transfer Personnel, Procedures, Equipment, and Records

155.700 Designation of person in charge.
155.710 Qualifications of person in charge.

155.715 Contents of letter of designation as a person-in-charge of the transfer of fuel oil.
155.720 Transfer procedures.
155.730 Compliance with transfer procedures.
155.740 Availability of transfer procedures.
155.750 Contents of transfer procedures.
155.760 Amendment of transfer procedures.
155.770 Draining into bilges.
155.775 Maximum cargo level of oil.
155.780 Emergency shutdown.
155.785 Communications.
155.790 Deck lighting.
155.800 Transfer hose.
155.805 Closure devices.
155.810 Tank vessel security.
155.815 Tank vessel integrity.
155.820 Records.

Subpart D—Tank Vessel Response Plans for Oil

155.1010 Purpose.
155.1015 Applicability.
155.1020 Definitions.
155.1025 Operating restrictions and interim operating authorization.
155.1026 Qualified individual and alternate qualified individual.
155.1030 General response plan requirements.
155.1035 Response plan requirements for manned vessels carrying oil as a primary cargo.
155.1040 Response plan requirements for unmanned tank barges carrying oil as a primary cargo.
155.1045 Response plan requirements for vessels carrying oil as a secondary cargo.
155.1050 Response plan development and evaluation criteria for vessels carrying groups I through IV petroleum oil as a primary cargo.
155.1052 Response plan development and evaluation criteria for vessels carrying group V petroleum oil as a primary cargo.
155.1055 Training.
155.1060 Exercises.
155.1062 Inspection and maintenance of response resources.
155.1065 Procedures for plan submission, approval, requests for acceptance of alternative planning criteria, and appeal.
155.1070 Procedures for plan review, revision, amendment, and appeal.

Subpart E—Additional Response Plan Requirements for Tankers Loading Cargo at a Facility Permitted Under the Trans-Alaska Pipeline Authorization Act

155.1110 Purpose and applicability.
155.1115 Definitions.
155.1120 Operating restrictions and interim operating authorization.
155.1125 Additional response plan requirements.
155.1130 Requirements for prepositioned response equipment.
155.1135 Response plan development and evaluation criteria.
155.1145 Submission and approval procedures.
155.1150 Plan revision and amendment procedures.

Subpart F—Response plan requirements for vessels carrying animal fats and vegetable oils as a primary cargo

155.1210 Purpose and applicability.
155.1225 Response plan submission requirements.
155.1230 Response plan development and evaluation criteria.

Subpart G—Response Plan Requirements for Vessels Carrying Other Non-Petroleum Oils as a Primary Cargo

155.2210 Purpose and applicability.
155.2225 Response plan submission requirements.
155.2230 Response plan development and evaluation criteria.

Subpart H [Reserved]

Subpart I—Salvage and Marine Firefighting

155.4010 Purpose of this subpart.
155.4015 Vessel owners and operators who must follow this subpart.
155.4020 Complying with this subpart.
155.4025 Definitions.
155.4030 Required salvage and marine firefighting services to list in response plans.
155.4032 Other resource provider considerations.
155.4035 Required pre-incident information and arrangements for the salvage and marine firefighting resource providers listed in response plans.
155.4040 Response times for each salvage and marine firefighting service.
155.4045 Required agreements or contracts with the salvage and marine firefighting resource providers.
155.4050 Ensuring that the salvors and marine firefighters are adequate.
155.4052 Drills and exercises.
155.4055 Temporary waivers from meeting one or more of the specified response times.

Subpart J–Nontank Vessel Response Plans

155.5010 Purpose.
155.5012 Deviation from response plan.
155.5015 Applicability.
155.5020 Definitions.

155.5021 Operating restrictions.
155.5023 Interim operating authorization.
155.5025 One-time port waiver.
155.5026 Qualified individual and alternate qualified individual.
155.5030 Nontank vessel response plan requirements: General content.
155.5035 Nontank vessel response plan requirements: Specific content.
155.5050 Response plan development and evaluation criteria for nontank vessels carrying groups I through IV petroleum oil.
155.5052 Response plan development and evaluation criteria for nontank vessels carrying group V petroleum oil.
155.5055 Training.
155.5060 Exercises.
155.5061 Alternative Training and Exercise Program.
155.5062 Inspection and maintenance of response resources.
155.5065 Procedures for plan submission and approval.
155.5067 Alternative planning criteria.
155.5070 Procedures for plan review, revision, and amendment.
155.5075 Appeal procedures.
APPENDIX A TO PART 155—SPECIFICATIONS FOR SHORE CONNECTION
APPENDIX B TO PART 155—DETERMINING AND EVALUATING REQUIRED RESPONSE RESOURCES FOR VESSEL RESPONSE PLANS
APPENDIX C TO PART 155—TRAINING ELEMENTS FOR OIL SPILL RESPONSE PLANS

AUTHORITY: 3 U.S.C. 301 through 303; 33 U.S.C. 1225, 1231, 1321(j), 1903(b), 2735; E.O. 12777, 56 FR 54757, 3 CFR, 1991 Comp., p. 351; Department of Homeland Security Delegation No. 0170.1. Section 155.480 also issued under section 4110(b) of Pub. L. 101.380.

NOTE: Additional requirements for vessels carrying oil or hazardous materials are contained in 46 CFR parts 30 through 40, 150, 151, and 153.

Subpart A—General

SOURCE: CGD 75–124a, 48 FR 45714, Oct. 6, 1983, unless otherwise noted.

§ 155.100 Applicability.

(a) Subject to the exceptions provided for in paragraph (b) and (c) of this section, this part applies to each ship that:

(1) Is operated under the authority of the United States, wherever located; or

(2) Is operated under the authority of a country other than the United States while in the navigable waters of the United States, or while at a port or terminal under the jurisdiction of the United States.

(b) This part does not apply to:

(1) A warship, naval auxiliary, or other ship owned or operated by a country when engaged in non-commercial service; or

(2) Any other ship specifically excluded by MARPOL 73/78.

(c) Section 155.480 applies to each tank vessel with a cargo capacity of 1,000 or more cubic meters (approximately 6,290 barrels), loading oil or oil reside as cargo that is operated under the authority of the United States, wherever located, or operated under the authority of a country other than the United States while in the navigable waters of the United States, or while at a port or terminal under the jurisdiction of the United States.

[CGD 75–124a, 48 FR 45714, Oct. 6, 1983, as amended by CGD 90–071a, 62 FR 48773, Sept. 17, 1997]

§ 155.110 Definitions.

Except as specifically stated in a section, the definitions in part 151 of this chapter, except for the word ''oil'', and in part 154 of this chapter, apply to this part. The following definition also applies to this part:

Merchant mariner credential or MMC means the credential issued by the Coast Guard under 46 CFR part 10. It combines the individual merchant mariner's document, license, and certificate of registry enumerated in 46 U.S.C. subtitle II part E as well as the STCW endorsement into a single credential that serves as the mariner's qualification document, certificate of identification, and certificate of service.

[USCG–2006–24371, 74 FR 11212, Mar. 16, 2009]

§ 155.120 Equivalents.

(a) For ships required to be surveyed under § 151.17 of this chapter, the Commandant may, upon receipt of a written request, allow any fitting, material, appliance or apparatus to be fitted in a ship as an alternative to that required by both MARPOL 73/78 and subpart B of this part if such fitting, material, appliance, or apparatus is at least as effective as that required by subpart B. Substitution of operational

methods to control the discharge of oil in place of those design and construction features prescribed by MARPOL 73/78 that are also prescribed by subpart B of this part is not allowed.

(b) Any equivalent to a feature prescribed by MARPOL 73/78 that is authorized for a ship having an IOPP Certificate is noted on that Certificate.

(c) For tank vessels required to have overfill devices installed under parts 155 and 156 of this chapter, the Commandant may, upon receipt of a written request, allow any fitting, material, appliance, or apparatus to be fitted in a tank vessel as an alternative to the required overfill device(s) that are specified in these parts if the proposed alternative device is at least as effective as that required in the regulations.

[CGD 75–124a, 48 FR 45714, Oct. 6, 1983, as amended by CGD 90–071a, 59 FR 53290, Oct. 21, 1994]

§ 155.130 Exemptions.

(a) The Commandant grants an exemption or partial exemption from compliance with any requirement in this part if:

(1) A ship operator submits a written request for an exemption via the COTP or OCMI thirty (30) days before operations under the exemption are proposed unless the COTP or OCMI authorizes a shorter time; and

(2) It is determined from the request that:

(i) Compliance with a specific requirement is economically or physically impractical;

(ii) No alternative procedures, methods, or equipment standards exist that would provide an equivalent level of protection from pollution; and

(iii) The likelihood of discharges occurring as a result of the exemption is minimal.

(b) If requested, the applicant must submit any appropriate information, including an environmental and economic assessment of the effects of and the reasons for the exemption and proposed procedures, methods, or equipment standards.

(c) The exemption may specify the procedures, methods, or equipment standards that will apply.

(d) An oceangoing ship is not given an exemption from the requirements of subpart B of this part unless the ship is a hydrofoil, air cushion vehicle or other new type of ship (near-surface craft, submarine craft, etc.) whose constructional features are such as to render the application of any of the provisions of subpart B relating to construction and equipment unreasonable or impractical. The construction and equipment of the ship must provide protection equivalent to that afforded by subpart B of this part against pollution, having regard to the service for which the ship is intended.

(e) An exemption is granted or denied in writing. The decision of the Commandant is a final agency action.

NOTE TO § 155.130: Additional exemptions/temporary waivers related to *salvage* and *marine firefighting* requirements can be found in § 155.4055.

[CGD 75–124a, 48 FR 45714, Oct. 6, 1983, as amended by CGD 86–034, 55 FR 36254, Sept. 4, 1990; USCG–1998–3417, 73 FR 80648, Dec. 31, 2008]

§ 155.140 Incorporation by reference.

(a) Certain material is incorporated by reference into this part with the approval of the Director of the Federal Register under 5 U.S.C. 552(a) and 1 CFR part 51. To enforce any edition other than that specified in this section, the Coast Guard must publish notice of change in the FEDERAL REGISTER and the material must be available to the public. All approved material is available for inspection at the National Archives and Records Administration (NARA). For information on the availability of this material at NARA, call 202–741–6030 or go to *http://www.archives.gov/federal_register/code_of_federal_regulations/ibr_locations.html*. Also, it is available for inspection at the Coast Guard, Office of Vessel Activities, (CG–543), 2100 2nd St., SW., Stop 7581, Washington, DC 20593–7581, 202–372–1251. Approved material is available from the sources indicated in this section.

(b) *American National Standards Institute, Inc. (ANSI)*, 25 West 43rd Street, New York, NY 10036, 212–642–4980, *http://www.ansi.org/:*

(1) ANSI A10.14, Requirements for Safety Belts, Harnesses, Lanyards and

Lifelines for Construction and Demolition Use, 1991 (''ANSI A10.14''), incorporation by reference approved for § 155.230.

(2) [Reserved]

(c) *ASTM International,* 100 Barr Harbor Drive, P.O. Box C700, West Conshohocken, PA 19428–2959, 877–909–2786, *http://www.astm.org:*

(1) ASTM F 631–93, Standard Guide for Collecting Skimmer Performance Data in Controlled Environments (''ASTM F 631–93''), incorporation by reference approved for Appendix B.

(2) ASTM F 715–95, Standard Test Methods for Coated Fabrics Used for Oil Spill Control and Storage (''ASTM F 715–95''), incorporation by reference approved for in Appendix B.

(3) [Reserved]

(4) ASTM F1413–07, Standard Guide for Oil Spill Dispersant Application Equipment: Boom and Nozzle Systems, incorporation by reference approved for § 155.1050.

(5) ASTM F1737–07, Standard Guide for Use of Oil Spill Dispersant-Application Equipment During Spill Response: Boom and Nozzle Systems, incorporation by reference approved for § 155.1050.

(6) ASTM F1779–08, Standard Practice for Reporting Visual Observations of Oil on Water, incorporation by reference approved for § 155.1050.

(d) *International Maritime Organization (IMO)*, 4 Albert Embankment, London SE1 7SR, United Kingdom, *http://www.imo.org/:*

(1) Resolution A.535(13), Recommendations on Emergency Towing Requirements for Tankers, November 17, 1983 (''Resolution A.535(13)''), incorporation by reference approved for § 155.235.

(2) Resolution A.741(18), International Management Code for the Safe Operation of Ships and for Pollution Prevention (International Safety Management (ISM) Code), adopted 4 November, 1993, incorporation by reference approved for § 155.5035.

(3) Resolution A.851(20), General Principles for Ship Reporting Systems and Ship Reporting Requirements, Including Guidelines for Reporting Incidents Involving Dangerous Goods, Harmful Substances and/or Marine Pollutants, adopted 27 November, 1997, incorporation by reference approved for § 155.5035.

(4) Resolution MSC.35(63), Adoption of Guidelines for Emergency Towing Arrangement on Tankers, May 20, 1994 (''Resolution MSC.35(63)''), incorporation by reference approved for § 155.235.

(5) Resolution MSC.104(73), Adoption of Amendments to the International Safety Management (ISM) Code, adopted 5 December, 2000, incorporation by reference approved for § 155.5035.

(e) *National Fire Protection Association (NFPA)*, 1 Batterymarch Park, Quincy, MA 02269–7471, 617–770–3000, *http://www.nfpa.org/:*

(1) NFPA 1001, Standard for Fire Fighter Professional Qualifications, 2008 Edition (''NFPA 1001''), incorporation by reference approved for § 155.4050.

(2) NFPA 1005, Standard for Professional Qualifications for Marine Fire Fighting for Land-Based Fire Fighters, 2007 Edition (''NFPA 1005''), incorporation by reference approved for § 155.4050.

(3) NFPA 1021, Standard for Fire Officer Professional Qualifications, 2003 Edition (''NFPA 1021''), incorporation by reference approved for § 155.4050.

(4) NFPA 1405, Guide for Land-Based Fire Fighters Who Respond to Marine Vessel Fires, 2006 Edition (''NFPA 1405''), incorporation by reference approved for §§ 155.4035 and 155.4050.

(5) NFPA 1561, Standard on Emergency Services Incident Management System, 2008 Edition (''NFPA 1561''), incorporation by reference approved for § 155.4050.

(f) *Oil Companies International Marine Forum (OCIMF)*, 29 Queen Anne's Gate, London, SW1H 9BU England, *http://www.ocimf.com/:*

(1) Ship to Ship Transfer Guide (Petroleum), Second Edition, 1988, incorporation by reference approved for § 155.1035.

(2) Ship to Ship Transfer Guide (Petroleum), Fourth Edition, 2005, incorporation by reference approved for § 155.5035.

[USCG–1998–3417, 73 FR 80648, Dec. 31, 2008, as amended by USCG–2001–8661, 74 FR 45026, Aug. 31, 2009; USCG–2010–0351, 75 FR 36285, June 25, 2010; USCG–2012–0866, 78 FR 13249, Feb. 27, 2013; USCG–2008–1070, 78 FR 60122, Sept. 30, 2013]

Subpart B—Vessel Equipment

SOURCE: CGD 75–124a, 48 FR 45715, Oct. 6, 1983, unless otherwise noted.

§ 155.200 Definitions.

As used in this subpart:

Inland oil barge means a tank barge carrying oil in bulk as cargo certificated by the Coast Guard under 46 CFR chapter I, subchapter D for river or canal service or lakes, bays, and sounds service.

On-deck spill means a discharge of oil on the deck of a vessel during loading, unloading, transfer, or other shipboard operations. An on-deck spill could result from a leaking fitting, an overfill, a bad connection, or similar operational mishap. The term *on-deck spill* is used to differentiate these operational discharges from those caused by collision or grounding where the hull is punctured and a tank is ruptured, resulting in an uncontrolled discharge of oil into the marine environment.

Offshore oil barge means a tank barge carrying oil in bulk as cargo, including dual-mode integrated tug-barges, certificated by the Coast Guard under 46 CFR chapter I, subchapter D, for navigation in waters outside the Boundary Lines, as defined in 46 CFR part 7, in any ocean or the Gulf of Mexico; any tank barge in Great Lakes service; or any foreign flag tank barge.

Oil tanker means a self-propelled vessel carrying oil in bulk as cargo, including integrated tug-barges designed for push-mode operation.

Vessel carrying oil as secondary cargo means a vessel carrying oil pursuant to a permit issued under 46 CFR 30.01–5, 46 CFR 70.05–30, or 46 CFR 90.05–35 or pursuant to an International Oil Pollution Prevention (IOPP) or Noxious Liquid Substance (NLS) certificate required by § 151.33 or § 151.35 of this chapter; or any uninspected vessel that carries oil in bulk as cargo.

[CGD 90–068, 58 FR 67996, Dec. 22, 1993, as amended by USCG–2001–9046, 67 FR 58524, Sept. 17, 2002; 73 FR 79316, Dec. 29, 2008]

§ 155.205 Discharge removal equipment for vessels 400 feet or greater in length.

(a) Oil tankers and offshore oil barges with an overall length of 400 feet or more must carry appropriate equipment and supplies for the containment and removal of on-deck oil cargo spills of at least 12 barrels.

(b) The equipment and supplies must include—

(1) Sorbents;

(2) Non-sparking hand scoops, shovels, and buckets;

(3) Containers suitable for holding recovered waste;

(4) Emulsifiers for deck cleaning;

(5) Protective clothing;

(6) A minimum of one non-sparking portable pump with hoses; and

(7) Scupper plugs.

(c) During cargo transfer operations, the equipment and supplies must remain ready for immediate use.

[CGD 90–068, 58 FR 67996, Dec. 22, 1993, as amended by USCG–1998–3799, 63 FR 35531, June 30, 1998]

§ 155.210 Discharge removal equipment for vessels less than 400 feet in length.

(a) Oil tankers and offshore oil barges with an overall length of less than 400 feet must carry appropriate equipment and supplies for the containment and removal of on-deck oil spills of at least 7 barrels.

(b) The equipment and supplies must include—

(1) Sorbents;

(2) Non-sparking hand scoops, shovels, and buckets;

(3) Containers suitable for holding recovered waste;

(4) Emulsifiers for deck cleaning;

(5) Protective clothing;

(6) A minimum of one non-sparking portable pump with hoses; and

(7) Scupper plugs.

(c) During cargo transfer operations, the equipment and supplies must remain ready for immediate use.

[CGD 90–068, 58 FR 67996, Dec. 22, 1993, as amended by USCG–1998–3799, 63 FR 35531, June 30, 1998]

§ 155.215 Discharge removal equipment for inland oil barges.

(a) During cargo transfer operations, inland oil barges must have appropriate equipment and supplies ready for immediate use to control and remove on-deck oil cargo spills of at least one barrel.

(b) The equipment and supplies must include—

(1) Sorbents;

(2) Non-sparking hand scoops, shovels, and buckets;

(3) Containers suitable for holding recovered waste;

(4) Emulsifiers for deck cleaning; and

(5) Protective clothing.

(c) The oil barge owner or operator may rely on equipment available at the transfer facility receiving from or discharging to the barge, provided the barge owner or operator has prearranged for the use of the equipment by contract or other means approved by the Coast Guard.

[CGD 90–068, 58 FR 67996, Dec. 22, 1993, as amended by USCG–1998–3799, 63 FR 35531, June 30, 1998]

§ 155.220 Discharge removal equipment for vessels carrying oil as secondary cargo.

(a) Vessels carrying oil as secondary cargo must carry appropriate equipment and supplies for the containment and removal of on-deck oil cargo spills of at least one-half barrel.

(b) The equipment and supplies must include—

(1) Sorbents;

(2) Non-sparking hand scoops, shovels, and buckets;

(3) Containers suitable for holding recovered waste;

(4) Emulsifiers for deck cleaning; and

(5) Protective clothing

(c) The equipment and supplies must be ready for immediate use during cargo transfer operations.

[CGD 90–068, 58 FR 67996, Dec. 22, 1993, as amended by USCG–1998–3799, 63 FR 35531, June 30, 1998]

§ 155.225 Internal cargo transfer capability.

Oil tankers and offshore oil barges must carry suitable hoses and reducers for internal transfer of cargo to tanks or other spaces within the cargo block, unless the vessel's installed cargo piping system is capable of performing this function.

[CGD 90–068, 58 FR 67996, Dec. 22, 1993, as amended by USCG–1998–3799, 63 FR 35531, June 30, 1998]

§ 155.230 Emergency control systems for tank barges.

(a) *Application.* This section does not apply to foreign vessels engaged in innocent passage (that is, neither entering nor leaving a U.S. port); it applies to tank barges and vessels towing them on the following waters:

(1) On the territorial sea of the U.S. [as defined in Presidential Proclamation 5928 of December 27, 1988, it is the belt of waters 12 nautical miles wide with its shoreward boundary the baseline of the territorial sea], unless—

(i) The barge is being pushed ahead of, or towed alongside, the towing vessel; and

(ii) The barge's coastwise route is restricted, on its certificate of inspection (COI), so the barge may operate ''in fair weather only, within 20 miles of shore,'' or with words to that effect. The Officer in Charge, Marine Inspection, may define ''fair weather'' on the COI.

(2) In Great Lakes service unless—

(i) The barge is being pushed ahead of, or towed alongside, the towing vessel; and

(ii) The barge's route is restricted, on its certificate of inspection (COI), so the barge may operate ''in fair weather only, within 5 miles of a harbor,'' or with words to that effect. The Officer in Charge, Marine Inspection, may define ''fair weather'' on the COI.

(3) On Long Island Sound. For the purposes of this section, Long Island Sound comprises the waters between the baseline of the territorial sea on the eastern end (from Watch Hill Point, Rhode Island, to Montauk Point, Long Island) and a line drawn north and south from Premium Point, New York (about 40°54.5′ N, 73°45.5′ W), to Hewlett Point, Long Island (about 40°50.5′ N, 73°45.3′ W), on the western end.

(4) In the Strait of Juan de Fuca.

(5) On the waters of Admiralty Inlet north of Marrowstone Point (approximately 48°06′ N, 122°41′ W).

(b) *Safety program.* If you are the owner or operator of a single-hull tank barge or of a vessel towing it, you must adequately man and equip either the barge or the vessel towing it so the crew can arrest the barge by employing *Measure 1,* described in paragraph (b)(1) of this section. Moreover, the crew must be able to arrest or retrieve the barge by employing either *Measure 2* or *Measure 3,* described in paragraphs (b)(2) and (3) of this section, respectively. If you are the owner or operator of a double-hull tank barge, you must adequately equip it and train its crew or, if it is unmanned, train the crew of the vessel towing it, so the crew can retrieve the barge by employing *Measure 2* described in paragraph (b)(2) of this section.

(1) *Measure 1.* Each single-hull tank barge, whether manned or unmanned, must be equipped with an operable anchoring system that conforms to 46 CFR 32.15–15; except that, for barges operating only on the West Coast of the U.S., a system comprising heavy surge gear and bridle legs may serve instead of the anchoring system. Because these systems will also serve as emergency control systems, the owner or operator must ensure that they meet the following criteria:

(i) *Operation and performance.* When the barge is underway—

(A) The system is ready for immediate use;

(B) No more than two crewmembers are needed to operate the system and anchor the barge or arrest its movement;

(C) While preparing to anchor the barge or arrest its movement, the operator of the system should confer with the master or mate of the towing vessel regarding appropriate length of cable or chain to use; and

(D) Each operator of the system should wear a safety belt or harness secured by a lanyard to a lifeline, drop line, or fixed structure such as a welded padeye, if the sea or the weather warrants this precaution. Each safety belt, harness, lanyard, lifeline, and drop line must meet the specifications of ANSI A10.14 (incorporated by reference, see § 155.140).

(ii) *Maintenance and inspections.* The owner or operator of the system shall inspect it annually. The inspection must verify that the system is ready for immediate use, and must include a visual inspection of the equipment that comprises the system in accordance with the manufacturer's recommendations. The inspection must also verify that the system is being maintained in accordance with the manufacturer's recommendations. The inspection need not include actual demonstration of the operation of the equipment or system.

(iii) *Training.* On each manned barge, every crewmember must be thoroughly familiar with the operation of the system. On each vessel towing an unmanned barge, every deck crewmember must be thoroughly familiar with the operation of the system installed on the barge. If during the last 12 months the system was not used to anchor or arrest the movement of the barge, then a drill on the use of the system must be conducted within the next month. The drill need not involve actual deployment of the system. However, it must allow every participant to demonstrate the competencies (that is, the knowledge, skills, and abilities) needed to ensure that everyone assigned a duty in anchoring or arresting the movement of the barge is ready to do his or her duty.

(2) *Measure 2.* If you are the owner or operator of a tank barge or a vessel towing it and this section applies to you by virtue of paragraph (a) of this section, you must have installed an emergency retrieval system or some other measure acceptable to the Coast Guard, as provided in paragraph (b)(3) of this section. Any such system must meet the following criteria:

(i) *Design.* The system must use an emergency towline with *at least* the same pulling strength as required of the primary towline. The emergency towline must be readily available on either the barge or the vessel towing it. The towing vessel must have on board equipment to regain control of the barge and continue towing (using the emergency towline), without having to place personnel on board the barge.

(ii) *Operation and performance.* The system must use a stowage arrangement that ensures the readiness of the emergency towline and the availability

of all retrieval equipment for immediate use in an emergency whenever the barge is being towed astern.

(iii) *Maintenance and inspection*. The owner or operator of the system shall inspect it annually. The inspection must verify that the emergency retrieval system is ready for immediate use, and must include a visual inspection of the equipment that comprises the system in accordance with the manufacturer's recommendations. The inspection must also verify that the system is being maintained in accordance with the manufacturer's recommendations. The inspection need not include actual demonstration of the operation of the equipment or system. Details concerning maintenance of towlines appear in 33 CFR 164.74(a)(3) and Navigation and Vessel Inspection Circular (NVIC) No. 5–92. Our NVICs are available online at *http://www.uscg.mil/hq/g-m/nvic/index.htm*.

(iv) *Training*. Barge-retrieval drills must take place annually, and not more than one month after a master or mate responsible for supervising barge retrieval begins employment on a vessel that tows tank barges.

(A) Each drill must allow every participant to demonstrate the competencies (that is, the knowledge, skills, and abilities) needed to ensure that everyone assigned a duty in barge retrieval is ready to do his or her part to regain control of a drifting barge.

(B) If the drill includes actual operation of a retrieval system, it must be conducted under the supervision of the master or mate responsible for retrieval, and preferably in open waters free from navigational hazards so as to minimize risk to personnel and the environment.

(3) *Measure 3*. If you are the owner or operator of a tank barge or a vessel towing it and this section applies to you by virtue of paragraph (a) of this section, you may use an alternative measure or system fit for retrieving a barge or arresting its movement as a substitute for Measure 2, described in paragraph (b)(2) of this section. Before you use such a measure or system, however, it must receive the approval of the Commandant (CG–521). It will receive this approval if it provides protection against grounding of the tank vessel comparable to that provided by one of the other two measures described in this section.

[USCG–1998–4443, 65 FR 31811, May 19, 2000, as amended by USCG–2001–8661, 74 FR 45026, Aug. 31, 2009; USCG–2010–0351, 75 FR 36285, June 25, 2010]

§ 155.235 Emergency towing capability for oil tankers.

An emergency towing arrangement shall be fitted at both ends on board all oil tankers of not less than 20,000 deadweight tons (dwt), constructed on or after September 30, 1997. For oil tankers constructed before September 30, 1997, such an arrangement shall be fitted at the first scheduled dry-docking, but not later than January 1, 1999. The design and construction of the towing arrangement shall be in accordance with IMO resolution MSC.35(63) (incorporated by reference; see § 155.140).

[USCG–2001–8661, 74 FR 45026, Aug. 31, 2009]

§ 155.240 Damage stability information for oil tankers and offshore oil barges.

(a) Owners or operators of oil tankers and offshore oil barges shall ensure that their vessels have prearranged, prompt access to computerized, shore-based damage stability and residual structural strength calculation programs.

(b) Vessel baseline strength and stability characteristics must be pre-entered into such programs and be consistent with the vessel's existing configuration.

(c) Access to the shore-based calculation program must be available 24 hours a day.

(d) At a minimum, the program must facilitate calculation of the following:

(1) Residual hull girder strength based on the reported extent of damage.

(2) Residual stability when the vessel's compartments are breached.

(3) The most favorable off-loading, ballasting, or cargo transfer sequences to improve residual stability, reduce hull girder stresses, and reduce ground-force reaction.

(4) The bending and shear stresses caused by pinnacle loads from grounding or stranding.

[CGD 90–068, 58 FR 67996, Dec. 22, 1993, as amended by USCG–1998–3799, 63 FR 35531, June 30, 1998]

§ 155.245 Damage stability information for inland oil barges.

(a) Owners or operators of inland oil barges shall ensure that the vessel plans necessary to perform salvage, stability, and residual hull strength assessments are maintained at a shore-based location.

(b) Access to the plans must be available 24 hours a day.

[CGD 90–068, 58 FR 67997, Dec. 22, 1993, as amended by USCG–1998–3799, 63 FR 35531, June 30, 1998]

§ 155.310 Containment of oil and hazardous material cargo discharges.

(a) A tank vessel with a capacity of 250 or more barrels that is carrying oil or hazardous material as cargo must have—

(1) Under or around each loading manifold and each transfer connection point, a fixed container or enclosed deck area that, in all conditions of ship list or trim encountered during the loading operation, has a capacity of at least:

(i) One half barrel if it serves one or more hoses with an inside diameter of 2 inches or less, or one or more loading arms with a nominal pipe size diameter of 2 inches or less;

(ii) One barrel if it serves one or more hoses with an inside diameter of more than 2 inches but less than 4 inches, or one or more loading arms with a nominal pipe size diameter of more than 2 inches but less than 4 inches;

(iii) Two barrels if it serves one or more hoses with an inside diameter of 4 inches or more, but less than 6 inches, or one or more loading arms with a nominal pipe size diameter of 4 inches or more, but less than 6 inches;

(iv) Three barrels if it serves one or more hoses with an inside diameter of 6 inches or more, but less than 12 inches, or one or more loading arms with a nominal pipe size diameter of 6 inches or more, but less than 12 inches; or

(v) Four barrels if it serves one or more hoses with an inside diameter of 12 inches or more, or one or more loading arms with a nominal pipe size diameter of 12 inches or more;

(2) A means of draining or removing discharged oil or hazardous material from each container or enclosed deck area without discharging the oil or hazardous material into the water; and

(3) A mechanical means of closing each drain and scupper in the container or enclosed deck area required by this section.

(b) An offshore tank barge with a cargo capacity of 250 or more barrels that is carrying hazardous material as cargo and an inland tank barge with the capacity of 250 or more barrels that is carrying oil or a hazardous material as cargo must meet paragraph (a) of this section or be equipped with—

(1) A coaming, at least 4 inches high but not more than 8 inches high, enclosing the immediate area of the cargo hatches, loading manifolds, and transfer connections, that has a capacity, in all conditions of vessel list and trim to be encountered during the loading operation, of at least one-half barrel per hatch, manifold, and connection within the enclosed area;

(2) A fixed or portable container under each loading manifold and each transfer connection within the coaming, that holds at least one-half barrel;

(3) A mechanical means of closing each drain and scupper within the coaming; and

(4) A means of draining or removing discharged oil or hazardous material from the fixed or portable container and from within the coamings without discharging the oil or hazardous material into the water.

(c) All oil tankers and offshore oil barges with a cargo capacity of 250 or more barrels must have peripheral coamings, including port and starboard coamings and forward and aft athwartships coamings, completely enclosing the cargo deck area, cargo hatches, manifolds, transfer connections, and any other openings where cargo may overflow or leak.

(1) Coamings must be at least 4 inches high except in the aft corners.

(2) In the aft corners (port and starboard) of a vessel, the coamings must be at least 8 inches high and extend—

(i) Forward at least 14 feet from each corner; and

(ii) Inboard at least 8 feet from each corner.

(3) Each area enclosed by the coaming required under this paragraph must have—

(i) A means of draining or removing oil from the enclosed deck area without discharging oil into the water; and

(ii) A mechanical means of closing each drain and scupper in the enclosed deck-area.

(4) For a tankship, as defined in 46 CFR 30.10–67, the coaming or other barrier required in 46 CFR 32.56–15 may serve as the aft athwartships coaming if the tankship is otherwise in compliance with the requirements of this section.

(d) In addition to the requirements of paragraphs (a) and (b) of this section, an offshore oil barge with a cargo capacity of 250 or more barrels must have—

(1) A fixed or portable container that holds at least one-half barrel under each oil loading manifold and each oil transfer connection within the coaming;

(2) A mechanical means of closing each drain and scupper within the coaming; and

(3) A means of draining or removing discharged oil from the fixed or portable container and from within the coaming without discharging the oil into the water.

[CGD 75–124a, 48 FR 45715, Oct. 6, 1983, as amended by CGD 86–034, 55 FR 36254, Sept. 4, 1990; CGD 90–068, 58 FR 67997, Dec. 22, 1993; USCG–1998–3799, 63 FR 35531, June 30, 1998]

§ 155.320 Fuel oil and bulk lubricating oil discharge containment.

(a) A ship of 300 gross tons or more constructed after June 30, 1974 must have a fixed container or enclosed deck area under or around each fuel oil or bulk lubricating oil tank vent, overflow, and fill pipe, that:

(1) For a ship of 300 or more but less than 1600 gross tons has a capacity of at least one-half barrel; and

(2) For a ship of 1600 or more gross tons has a capacity of one barrel.

(b) A ship of 100 gross tons or more constructed before July 1, 1974, and a ship of 100 or more but less than 300 gross tons constructed after June 30, 1974 must:

(1) Meet paragraph (a)(1) of this section; or

(2) Equip each fuel oil or bulk lubricating oil tank vent, overflow, and fill pipe during oil transfer operations with a portable container of at least a 5 U.S. gallon capacity; or

(3) If the ship has a fill fitting for which containment is impractical, use an automatic back pressure shut-off nozzle.

(c) This section does not apply to a fixed or floating drilling rig or other platform.

§ 155.330 Oily mixture (bilge slops)/fuel oil tank ballast water discharges on U.S. non-oceangoing ships.

(a) No person may operate a U.S. non-oceangoing ship in the navigable waters of the United States, unless it has the capacity to retain on board all oily mixtures and is equipped to discharge these oily mixtures to a reception facility.

(b) A U.S. non-oceangoing ship may retain all oily mixtures on board in the ship's bilges. An oil residue (sludge) tank is not required.

(c) This section does not apply to a fixed or floating drilling rig or other platform.

[CGD 75–124a, 48 FR 45715, Oct. 6, 1983, as amended by USCG–2000–7641, 66 FR 55571, Nov. 2, 2001]

§ 155.350 Oily mixture (bilge slops)/fuel oil tank ballast water discharges on oceangoing ships of less than 400 gross tons.

(a) No person may operate an oceangoing ship of less than 400 gross tons, unless it either:

(1) Has the capacity to retain on board all oily mixtures and is equipped to discharge these oily mixtures to a reception facility; or

(2) Has approved oily-water separating equipment for processing oily mixtures from bilges or fuel oil tank ballast and discharges into the sea according to § 151.10 of this chapter.

(3) For equipment installed after 2004 to be approved under paragraph (a)(2)

of this section, it must meet current standards in 46 CFR part 162, subpart 162.050 by the date set forth in paragraphs (a)(3)(i) and (a)(3)(ii) of this section, unless the equipment is installed on a ship constructed before 2005 and it would be unreasonable or impracticable to meet those current standards.

(i) A ship entering international service for the first time since 2004, must comply with the requirements of paragraph (a)(3) of this section by the date of its initial survey prior to receiving its International Oil Pollution Prevention (IOPP) certificate.

(ii) Any ship, other than a ship described in paragraph (a)(3)(i) of this section, must comply with the requirements of paragraph (a)(3) of this section by the date of the ship's first drydock after October 13, 2009.

(b) An oceangoing ship of less than 400 gross tons may retain all oily mixtures on board in the ship's bilges. An oil residue (sludge) tank is not required.

(c) This section does not apply to a barge that is not equipped with an installed bilge pumping system for discharge into the sea.

(d) This section does not apply to a fixed or floating drilling rig or other platform.

[CGD 75–124a, 48 FR 45715, Oct. 6, 1983, as amended by CGD 88–002, 54 FR 18407, Apr. 28, 1989; CGD 97–023, 62 FR 33364, June 19, 1997; USCG–1998–3799, 63 FR 35531, June 30, 1998; USCG–2000–7641, 66 FR 55571, Nov. 2, 2001; USCG–2004–18939, 74 FR 3377, Jan. 16, 2009; 74 FR 52418, Oct. 13, 2009]

§ 155.360 Oily mixture (bilge slops) discharges on oceangoing ships of 400 gross tons and above but less than 10,000 gross tons, excluding ships that carry ballast water in their fuel oil tanks.

(a)(1) No person may operate an oceangoing ship of 400 gross tons and above but less than 10,000 gross tons, excluding a ship that carries ballast water in its fuel oil tanks, unless it is fitted with approved 15 parts per million (ppm) oily-water separating equipment for the processing of oily mixtures from bilges or fuel oil tank ballast.

(2) For equipment installed after 2004 to be approved under paragraph (a)(1) of this section, it must meet current standards in 46 CFR part 162, subpart 162.050 by the date set forth in paragraphs (a)(2)(i) and (a)(2)(ii) of this section, unless the equipment is installed on a ship constructed before 2005 and it would be unreasonable or impracticable to meet those current standards.

(i) A ship entering international service for the first time since 2004, must comply with the requirements of paragraph (a)(2) of this section by the date of its initial survey prior to receiving its International Oil Pollution Prevention (IOPP) certificate.

(ii) Any ship, other than a ship described in paragraph (a)(2)(i) of this section, must comply with the requirements of paragraph (a)(2) of this section by the date of the ship's first drydock after October 13, 2009.

(b) No person may operate a ship under this section unless it is fitted with a tank or tanks of adequate capacity to receive the oil residue that cannot be dealt with otherwise.

(1) In new ships such tanks shall be designed and constructed to facilitate cleaning and the discharge of the oily residues to reception facilities. Existing ships shall comply with this requirement as far as reasonable and practicable.

(2) Tanks used for oily mixtures on ships certificated under 46 CFR Chapter I shall meet the requirements of 46 CFR 56.50–50(h) for isolation between oil and bilge systems.

(c) No person may operate a ship unless it is equipped with a pipeline to discharge oily mixtures to a reception facility.

(d) This section does not apply to a barge that is not equipped with an installed bilge pumping system for discharge into the sea.

(e) This section does not apply to a fixed or floating drilling rig or other platform, except as specified in § 155.400(a)(2).

[CGD 75–124a, 48 FR 45715, Oct. 6, 1983, as amended by USCG–1998–3799, 63 FR 35531, June 30, 1998; USCG–2000–7641, 66 FR 55571, Nov. 2, 2001; USCG–2004–18939, 74 FR 3377, Jan. 16, 2009; 74 FR 52418, Oct. 13, 2009]

§ 155.370 Oily mixture (bilge slops)/fuel oil tank ballast water discharges on oceangoing ships of 10,000 gross tons and above and oceangoing ships of 400 gross tons and above that carry ballast water in their fuel oil tanks.

(a) No person may operate an oceangoing ship of 10,000 gross tons and above, or any oceangoing ship of 400 gross tons and above, that carries ballast water in its fuel oil tanks, unless it has—

(1) Approved 15 ppm oily-water separating equipment for the processing of oily mixtures from bilges or fuel oil tank ballast;

(2) A bilge alarm; and

(3) A means for automatically stopping any discharge of oily mixture when the oil content in the effluent exceeds 15 ppm.

(4) For equipment installed after 2004 to be approved under paragraph (a) of this section, it must meet current standards in 46 CFR part 162, subpart 162.050 by the date set forth in paragraphs (a)(4)(i) and (a)(4)(ii) of this section, unless the equipment is installed on a ship constructed before 2005 and it would be unreasonable or impracticable to meet those current standards.

(i) A ship entering international service for the first time since 2004, must comply with the requirements of paragraph (a)(4) of this section by the date of its initial survey prior to receiving its International Oil Pollution Prevention (IOPP) certificate.

(ii) Any ship, other than a ship described in paragraph (a)(4)(i) of this section, must comply with the requirements of paragraph (4) of this section by the date of the ship's first drydock after October 13, 2009.

(b) No person may operate a ship under this section unless it is fitted with a tank or tanks of adequate capacity to receive the oil residue that cannot be dealt with otherwise.

(1) In new ships such tanks shall be designed and constructed to facilitate cleaning and the discharge of the oil residue to reception facilities. Existing ships shall comply with this requirement as far as reasonable and practicable.

(2) Tanks used for oily mixtures on ships certificated under 46 CFR Chapter I shall meet the requirements of 46 CFR 56.50–50(h) for isolation between oil and bilge systems.

(c) No person may operate a ship under this section unless it is equipped with a pipeline to discharge oily mixtures to a reception facility.

(d) This section does not apply to a barge that is not equipped with an installed bilge pumping system for discharge into the sea.

(e) This section does not apply to a fixed or floating drilling rig or other platform, except as specified in § 155.400(a)(2).

(Approved by the Office of Management and Budget under control number 1625–0009)

[CGD 75–124a, 48 FR 45715, Oct. 6, 1983, as amended by USCG–1998–3799, 63 FR 35531, June 30, 1998; USCG–2000–7641, 66 FR 55571, Nov. 2, 2001; USCG–2006–25150, 71 FR 39210, July 12, 2006; USCG–2004–18939, 74 FR 3377, Jan. 16, 2009; 74 FR 52418, Oct. 13, 2009]

§ 155.380 Oily water separating equipment and bilge alarm approval standards.

(a) On U.S. inspected ships, oily water separating equipment and bilge alarms must be approved under 46 CFR 162.050.

(b) On U.S. uninspected ships and foreign ships, oily water separating equipment and bilge alarms must be approved under either 46 CFR 162.050 or MARPOL 73/78 Annex I.

NOTE TO § 155.380(b): A copy of Annex I to the International Convention for the Prevention of Pollution from Ships, 1973 as modified by the Protocol of 1978 relating thereto, as amended (MARPOL 73/78) may be purchased from the International Maritime Organization, Publications Section, 4 Albert Embankment, London SE1 75R, United Kingdom, Telex 23588; see also *http://www.imo.org*.

(c) A ship that is required to have a bilge alarm may defer installment and use a previously installed bilge monitor provided the bilge monitor met Coast Guard approval requirements at the time of its installation and it does not allow more than a 15 ppm oil content in water discharge.

(d) The accuracy of the bilge alarms must be checked at IOPP Certificate renewal surveys according to the manufacturer's instructions. Alternatively, the unit may be replaced by a calibrated bilge alarm. The calibration

certificate for the bilge alarm, which certifies the date of the last calibration check, should be retained onboard for inspection purposes. The accuracy checks can only be done by the manufacturer or persons authorized by the manufacturer.

(e) Ship staff training must include familiarization in the operation and maintenance of the equipment.

(f) The routine maintenance of the oily water separating equipment and the bilge alarm must be clearly defined by the manufacturer in the associated operating and maintenance manuals. All routine and repair maintenance must be recorded.

[USCG–2004–18939, 74 FR 3377, Jan. 16, 2009]

§ 155.400 Platform machinery space drainage on oceangoing fixed and floating drilling rigs and other platforms.

(a) No person may operate an oceangoing fixed or floating drilling rig or other platform unless it either—

(1) Complies with the oily-water separating equipment requirements of a valid National Pollutant Discharge Elimination System (NPDES) permit issued in accordance with section 402 of the Clean Water Act and 40 CFR Chapter I;

(2) Complies with the oily-water separating equipment requirements for oceangoing ships of 400 gross tons and above as set forth in either § 155.360 or § 155.370; or

(3) Is not equipped with an installed bilge pumping system for discharge of oily mixtures from platform machinery spaces into the sea and has the capacity to retain on board all of these oily mixtures and is equipped to discharge these mixtures for transport to a reception facility.

(b) When an oceangoing fixed or floating drilling rig or other platform is in a special area, is not proceeding en route, or is within 12 nautical miles of the nearest land; it must either—

(1) Have the capacity to retain on board all machinery space oily mixtures from platform machinery space drainage and be equipped to discharge these mixtures for transport to a reception facility; or

(2) Discharge in accordance with § 151.10 (b)(3), (b)(4), and (b)(5) of this chapter, provided the drilling rig or platform is not within a special area.

(c) Paragraph (b) of this section does not apply to a fixed or floating drilling rig or other platform that is operating under an NPDES permit.

[CGD 75–124a, 48 FR 45715, Oct. 6, 1983, as amended by CGD 88–002, 54 FR 18407, Apr. 28, 1989; CGD 94–056, 60 FR 43378, Aug. 21, 1995; USCG–1998–3799, 63 FR 35531, June 30, 1998]

§ 155.410 Pumping, piping and discharge requirements for non-oceangoing ships of 100 gross tons and above.

(a) No person may operate a non-oceangoing ship of 100 gross tons and above that is fitted with main or auxiliary machinery spaces in the navigable waters of the United States unless:

(1) The ship has at least one pump installed to discharge oily mixtures through a fixed piping system to a reception facility;

(2) The piping system required by this section has at least one outlet that is accessible from the weather deck;

(3) Each outlet required by this section has a shore connection that is compatible with reception facilities in the ship's area of operation; and

(4) The ship has a stop valve for each outlet required by this section.

(b) Paragraph (a) of this section does not apply to a ship that has approved oily-water separating equipment for the processing of oily mixtures from bilges or fuel oil tank ballast.

(c) This section does not apply to a fixed or floating drilling rig or other platform.

[CGD 75–124a, 48 FR 45715, Oct. 6, 1983, as amended by USCG–2000–7641, 66 FR 55572, Nov. 2, 2001]

§ 155.420 Pumping, piping and discharge requirements for oceangoing ships of 100 gross tons and above but less than 400 gross tons.

(a) No person may operate an oceangoing ship of 100 gross tons and above but less than 400 gross tons that is fitted with main or auxiliary machinery spaces unless:

(1) The ship has at least one pump installed to discharge oily mixtures through a fixed piping system to a reception facility;

(2) The piping system required by this section has at least one outlet accessible from the weather deck;

(3) For a ship on an international voyage, the outlet required by this section has a shore connection that meets the specifications in § 155.430, or the ship has at least one adapter that meets the specifications in § 155.430 and fits the required outlets;

(4) For a ship not on an international voyage, the outlet required by this section has a shore connection that is compatible with reception facilities in the ship's area of operation;

(5) The ship has a means on the weather deck near the discharge outlet to stop each pump that is used to discharge oily mixtures; and

(6) The ship has a stop valve installed for each outlet required by this section.

(b) Paragraph (a) of this section does not apply to a ship that has approved oily-water separating equipment for the processing of oily mixtures from bilges or fuel oil tank ballast.

(c) This section does not apply to a fixed or floating drilling rig or other platform.

[CGD 75–124a, 48 FR 45715, Oct. 6, 1983, as amended by USCG–2000–7641, 66 FR 55572, Nov. 2, 2001]

§ 155.430 Standard discharge connections for oceangoing ships of 400 gross tons and above.

(a) All oceangoing ships of 400 gross tons and above must have a standard shore connection for reception facilities to discharge oily mixtures from machinery space bilges or ballast water containing an oily mixture from fuel oil tanks. The discharge connection must have the following dimensions:

(1) Outside diameter=215 millimeters (mm).

(2) Inner diameter=according to pipe outside diameter.

(3) Bolt circle diameter=183 mm.

(4) Slots in flange=6 holes 22 mm in diameter equidistantly placed on a bolt circle of the above diameter, slotted to the flange periphery. The slot width to be 22 mm.

(5) Flange thickness=20 mm.

(6) Bolts and nuts, quantity and number=6 each of 20 mm in diameter and of suitable length.

(b) A portable adapter that meets the specifications of paragraph (a) of this section and that fits the discharge shore connection, for the discharge of oily wastes from machinery space bilges may be substituted for the standard discharge connection requirement of paragraph (a) of this section.

(c) The flange must be designed to accept pipes up to a maximum internal diameter of 125 mm and shall be of steel or other equivalent material having a flat face. This flange, together with a gasket of oilproof material, must be suitable for a service pressure of 6 kilograms/square centimeters (kg/cm^2).

[CGD 75–124a, 48 FR 45715, Oct. 6, 1983, as amended by USCG–2000–7641, 66 FR 55572, Nov. 2, 2001]

§ 155.440 Segregation of fuel oil and ballast water on new oceangoing ships of 4,000 gross tons and above, other than oil tankers, and on new oceangoing oil tankers of 150 gross tons and above.

(a) Except as provided for in paragraph (b) of this section, in new oceangoing ships of 4,000 gross tons and above other than oil tankers, and in new oceangoing oil tankers of 150 gross tons and above, ballast water must not be carried in any fuel oil tank.

(b) Where abnormal conditions or the need to carry large quantities of fuel oil render it necessary to carry ballast water that is not a clean ballast in any fuel oil tank, that ballast water must be discharged to reception facilities or into the sea in compliance with part 151 of this chapter using the equipment specified in § 155.370, and an entry shall be made in the Oil Record Book to this effect.

(Approved by the Office of Management and Budget under control number 1625–0009)

[CGD 75–124a, 48 FR 45715, Oct. 6, 1983, as amended by USCG–2006–25150, 71 FR 39210, July 12, 2006]

§ 155.450 Placard.

(a) A ship, except a ship of less than 26 feet in length, must have a placard of at least 5 by 8 inches, made of durable material fixed in a conspicuous place in each machinery space, or at the bilge and ballast pump control station, stating the following:

DISCHARGE OF OIL PROHIBITED

The Federal Water Pollution Control Act prohibits the discharge of oil or oily waste into or upon the navigable waters of the United States, or the waters of the contiguous zone, or which may affect natural resources belonging to, appertaining to, or under the exclusive management authority of the United States, if such discharge causes a film or discoloration of the surface of the water or causes a sludge or emulsion beneath the surface of the water. Violators are subject to substantial civil penalties and/or criminal sanctions including fines and imprisonment.

(b) Existing stocks of placards may be used for the life of the placard.

(c) The placard required by paragraph (a) or (b) of this section must be printed in the language or languages understood by the crew.

[CGD 75–124a, 48 FR 45715, Oct. 6, 1983, as amended by CGD 93–054, 58 FR 62262, Nov. 26, 1993]

§ 155.470 Prohibited spaces.

(a) In a ship of 400 gross tons and above, for which the building contract is placed after January 1, 1982 or, in the absence of a building contract, the keel of which is laid or which is at a similar stage of construction after July 1, 1982, oil or hazardous material must not be carried in a forepeak tank or a tank forward of the collision bulkhead.

(b) A self-propelled ship of 300 gross tons and above, to which paragraph (a) of this section does not apply, may not carry bulk oil or hazardous material in any space forward of a collision bulkhead except:

(1) For a ship constructed after June 30, 1974, fuel oil for use on the ship may be carried in tanks forward of a collision bulkhead, if such tanks are at least 24 inches inboard of the hull structure; or

(2) For a ship constructed before July 1, 1974, fuel oil for use on the ship may be carried in tanks forward of a collision bulkhead, if such tanks were designated, installed, or constructed for fuel oil carriage before July 1, 1974.

[CGD 75–124a, 48 FR 45715, Oct. 6, 1983, as amended by CGD 86–034, 55 FR 36254, Sept. 4, 1990]

§ 155.480 Overfill devices.

(a) For the purposes of this section, ''oil'' has the same definition as provided in § 151.05 of this chapter.

(b) Each tank vessel with a cargo capacity of 1,000 or more cubic meters (approximately 6,290 barrels), loading oil or oil residue as cargo, must have one overfill device that is permanently installed on each cargo tank and meets the requirements of this section.

(1) On a tankship, each cargo tank must be equipped with an overfill device (including an independent audible alarm or visible indicator for that tank) that meets the requirements for tank overfill alarms under 46 CFR 39.20–7(b)(2) and (3), and (d)(1) through (d)(4).

(2) On a tank barge, each cargo tank must be equipped with an overfill device that—

(i) Meets the requirements of 46 CFR 39.20–7(b)(2) and (b)(3) and (d)(1) through (d)(4), and 46 CFR 39.20–9(a)(1) through (a)(3);

(ii) Is an installed automatic shutdown system that meets the requirements of 46 CFR 39.20–9(b); or

(iii) Is an installed high level indicating device that meets the requirements of 46 CFR 39.20–3(b)(1), (b)(2), and (b)(3).

(c) Each cargo tank of a U.S. flag tank vessel must have installed on it an overfill device meeting the requirements of this section at the next scheduled cargo tank internal examination performed on the vessel under 46 CFR 31.10–21.

(d) Each cargo tank of a foreign flag tank vessel must have installed on it an overfill device—

(1) At the first survey that includes dry docking, as required by the vessel's flag administration, to meet the International Convention for the Safety of Life at Sea (SOLAS), 1974, as amended, or the International Load Line Convention of 1966; or

(2) At the first cargo tank internal examination performed on the tank vessel under 46 CFR 31.10–21.

(e) This section does not apply to a tank vessel that does not meet the double hull requirements of § 157.10d of this chapter and, under 46 U.S.C. 3703a(c), may not operate in the navigable

waters or Exclusive Economic Zone of the United States after January 1, 2000.

(f) This section does not apply to tank vessels that carry asphalt, animal fat, or vegetable oil as their only cargo.

[CGD 90–071a, 59 FR 53290, Oct. 21, 1994, as amended by CGD 90–071a, 62 FR 48773, Sept. 17, 1997]

§ 155.490 [Reserved]

Subpart C—Transfer Personnel, Procedures, Equipment, and Records

§ 155.700 Designation of person in charge.

Each operator or agent of a vessel with a capacity of 250 or more barrels of fuel oil, cargo oil, hazardous material, or liquefied gas as regulated in Table 4 of 46 CFR part 154, or each person who arranges for and hires a person to be in charge of a transfer of fuel oil, of a transfer of liquid cargo in bulk, or of cargo-tank cleaning, shall designate, either by name or by position in the crew, the person in charge (PIC) of each transfer to or from the vessel and of each tank-cleaning.

[CGD 79–116, 62 FR 25126, May 8, 1997]

§ 155.710 Qualifications of person in charge.

(a) On each tankship required to be documented under the laws of the United States, the operator or agent of the vessel, or the person who arranges and hires a person to be in charge either of a transfer of liquid cargo in bulk or of cargo-tank cleaning, shall verify to his or her satisfaction that each person designated as a PIC—

(1) Has sufficient training and experience with the relevant characteristics of the vessel on which he or she is engaged—including the cargo for transfer, the cargo-containment system, the cargo system (including transfer procedures, and shipboard-emergency equipment and procedures), the control and monitoring systems, the procedures for reporting pollution incidents, and, if installed, the Crude-Oil Washing (COW), inert-gas, and vapor-control systems—to safely conduct a transfer of fuel oil, a transfer of liquid cargo in bulk, or cargo-tank cleaning;

(2) Except as provided in paragraph (g) of this section, holds a license or officer endorsement issued under 46 CFR part 10 authorizing service aboard a vessel certified for voyages beyond any Boundary Line described in 46 CFR part 7, except on tankships or self-propelled tank vessels not certified for voyages beyond the Boundary Line; and

(3) Except as provided in paragraph (g) of this section and 46 CFR 13.113 (a) or (c), holds a Tankerman-PIC endorsement issued under 46 CFR part 13 that authorizes the holder to supervise the transfer of fuel oil, the transfer of liquid cargo in bulk, or cargo-tank cleaning, as appropriate to the product.

(b) On each tank barge required to be inspected under 46 U.S.C. 3703, the operator or agent of the vessel, or the person who arranges and hires a person to be in charge of a transfer of fuel oil, of a transfer of liquid cargo in bulk, or of cargo-tank cleaning, shall verify to his or her satisfaction that each PIC—

(1) Has sufficient training and experience with the relevant characteristics of the vessel on which he or she is engaged—including the cargo for transfer, the cargo-containment system, the cargo system (including transfer procedures, and shipboard-emergency equipment and procedures), the control and monitoring systems, the procedures for reporting pollution incidents, and, if installed, the COW, inert-gas, and vapor-control systems—to safely conduct either a transfer of liquid cargo in bulk or cargo-tank cleaning; and

(2) Except as provided in paragraph (g) of this section and 46 CFR part 13.113 (a) or (c), holds a Tankerman-PIC or Tankerman-PIC (Barge) endorsement issued under 46 CFR part 13 that authorizes the holder to supervise the transfer of fuel oil, the transfer of liquid cargo in bulk, or cargo-tank cleaning, as appropriate to the product and vessel.

(c) On each foreign tankship, the operator or agent of the vessel shall verify to his or her satisfaction that each PIC either of a transfer of liquid cargo in bulk or of cargo-tank cleaning—

(1) Has sufficient training and experience with the relevant characteristics of the vessel on which he or she is engaged, including the cargo for transfer, the cargo-containment system, the cargo system (including transfer procedures, and shipboard-emergency equipment and procedures), the control and monitoring systems, the procedures for reporting pollution incidents, and, if installed, the systems for crude-oil washing, inert gas, and vapor control, to safely conduct either a transfer of liquid cargo in bulk or cargo-tank cleaning;

(2) Except as provided in paragraph (g) of this section, holds a license or other document issued by the flag state or its authorized agent authorizing service as master, mate, pilot, engineer, or operator on that vessel;

(3) Except as provided in paragraph (g) of this section, holds a Dangerous-Cargo Endorsement or Certificate issued by a flag state party to the International Convention on Standards of Training, Certification and Watchkeeping for Seafarers, 1978 (STCW), or other form of evidence acceptable to the Coast Guard, attesting the PIC's meeting the requirements of Chapter V of STCW as a PIC of the transfer of fuel oil, of the transfer of liquid cargo in bulk, or of cargo-tank cleaning;

(4) Is capable of reading, speaking, and understanding in English, or a language mutually-agreed-upon with the shoreside PIC of the transfer, all instructions needed to commence, conduct, and complete a transfer of fuel oil, a transfer of liquid cargo in bulk, or cargo-tank cleaning, except that the use of an interpreter meets this requirement if the interpreter—

(i) Fluently speaks the language spoken by each PIC;

(ii) Is immediately available to the PIC on the tankship at all times during the transfer or cargo-tank cleaning; and

(iii) Is knowledgeable about, and conversant with terminology of, ships, transfers, and cargo-tank cleaning; and

(5) Is capable of effectively communicating with all crewmembers involved in the transfer or cargo-tank cleaning, with or without an interpreter.

(d) On each foreign tank barge, the operator or agent of the vessel shall verify to his or her satisfaction that each PIC either of the transfer of liquid cargo in bulk or of cargo-tank cleaning—

(1) Has sufficient training and experience with the relevant characteristics of the vessel on which he or she is engaged—including the cargo for transfer, the cargo-containment system, the cargo system (including transfer procedures, and shipboard-emergency equipment and procedures), the control and monitoring systems, the procedures for reporting pollution incidents, and, if installed, the COW, inert-gas, and vapor-control systems—to safely conduct a transfer of fuel oil, a transfer of liquid cargo in bulk, or cargo-tank cleaning;

(2) Except as provided in paragraph (g) of this section, holds a Dangerous-Cargo Endorsement or Certificate issued by a flag state party to STCW, or other form of evidence acceptable to the Coast Guard, attesting the PIC's meeting the requirements of Chapter V of STCW as a PIC of the transfer of fuel oil, of the transfer of liquid cargo in bulk, or of cargo-tank cleaning;

(3) Is capable of reading, speaking, and understanding in English, or a language mutually-agreed-upon with the shoreside PIC of the transfer, all instructions needed to commence, conduct, and complete a transfer of fuel oil, a transfer of liquid cargo in bulk, or cargo-tank cleaning, except that the use of an interpreter meets this requirement if the interpreter—

(i) Fluently speaks the language spoken by each PIC;

(ii) Is immediately available to the PIC on the tankship at all times during the transfer or cargo-tank cleaning; and

(iii) Is knowledgeable about, and conversant with terminology of, ships, transfers, and cargo-tank cleaning; and

(4) Is capable of effectively communicating with all crewmembers involved in the transfer or cargo-tank cleaning, with or without an interpreter.

(e) The operator or agent of each vessel to which this section applies shall verify to his or her satisfaction that

the PIC of any transfer of fuel oil requiring a Declaration of Inspection—

(1) On each inspected vessel required by 46 CFR chapter I to have an officer aboard, holds a valid license or merchant mariner credential issued under 46 CFR chapter I, subchapter B, authorizing service as a master, mate, pilot, engineer, or operator aboard that vessel, or holds a valid merchant mariner's document or merchant Mariner credential endorsed as Tankerman-PIC;

(2) On each uninspected vessel, either complies with the requirements of paragraph (e)(1) of this section or carries a letter satisfying the requirements of § 155.715 and designating him or her as a PIC, unless equivalent evidence is immediately available aboard the vessel or at his or her place of employment.

(3) On each tank barge, for its own engine-driven pumps, either complies with paragraph (e)(1) or (2) of this section or has been instructed by the operator or agent of the vessel both in his or her duties and in the Federal statutes and regulations on water pollution that apply to the vessel; or

(4) On each foreign vessel, holds a license or certificate issued by a flag state party to STCW, or other form of evidence acceptable to the Coast Guard, attesting the qualifications of the PIC to act as master, mate, pilot, operator, engineer, or tankerman aboard that vessel.

(f) Except as provided in paragraph (g) of this section, the operator or agent of each self-propelled tank vessel carrying oil or hazardous material in bulk shall verify to his or her satisfaction that the PIC of the transfer of oil or hazardous material in bulk to or from a vessel, or of cargo-tank cleaning, holds a Tankerman-PIC endorsement on his or her MMD or merchant mariner credential and either a license, officer endorsement, or a Certificate issued by a flag state party to STCW authorizing service as a master, mate, pilot, engineer, or operator aboard that vessel.

(g) The PIC of a cargo-tank cleaning on a vessel at a tank-cleaning facility or shipyard need not hold any of the merchant mariner credentials, licenses, documents, certificates, or endorsements required in paragraphs (a) through (f) of this section, if he or she is a National Fire Protection Association Certificated Marine Chemist.

[CGD 79–116, 60 FR 17141, Apr. 4, 1995, as amended by CGD 79–116, 61 FR 25126, May 8, 1997; CGD 79–116, 63 FR 35826, July 1, 1998; USCG–2006–24371, 74 FR 11212, Mar. 16, 2009]

§ 155.715 Contents of letter of designation as a person-in-charge of the transfer of fuel oil.

The letter of instruction required in § 155.710(e)(2) must designate the holder as a person-in-charge of the transfer of fuel oil and state that the holder has received sufficient formal instruction from the operator or agent of the vessel to ensure his or her ability to safely and adequately carry out the duties and responsibilities of the PIC described in 33 CFR 156.120 and 156.150.

[CGD 79–116, 63 FR 35826, July 1, 1998]

§ 155.720 Transfer procedures.

The operator of a vessel with a capacity of 250 or more barrels of oil, hazardous material, or liquefied gas as regulated in Table 4 of 46 CFR part 154 shall provide transfer procedures that meet the requirements of this part and part 156 of this chapter for transferring—

(a) To or from the vessel; and

(b) From tank to tank within the vessel.

[CGD 86–034, 55 FR 36254, Sept. 4, 1990, as amended by CGD 79–116, 62 FR 25127, May 8, 1997]

§ 155.730 Compliance with transfer procedures.

The vessel operator of each vessel required by § 155.720 to have transfer procedures shall maintain them current and shall require vessel personnel to use the transfer procedures for each transfer operation.

[CGD 75–124, 45 FR 7175, Jan. 31, 1980, as amended by CGD 86–034, 55 FR 36254, Sept. 4, 1990]

§ 155.740 Availability of transfer procedures.

The transfer procedures required by § 155.720 must be:

(a) Available for inspection by the COTP or OCMI whenever the vessel is in operation;

(b) Legibly printed in a language or languages understood by personnel engaged in transfer operations; and

(c) Permanently posted or available at a place where the procedures can be easily seen and used by members of the crew when engaged in transfer operations.

[CGD 75–124, 45 FR 7175, Jan. 31, 1980, as amended by CGD 86–034, 55 FR 36254, Sept. 4, 1990]

§ 155.750 Contents of transfer procedures.

(a) The transfer procedures required by § 155.720 must contain, either in the order listed or by use of a cross-reference index page:

(1) A list of each product transferred to or from the vessel, including the following information:

(i) Generic or chemical name;

(ii) Cargo information as described in § 154.310(a)(5)(ii) of this chapter; and

(iii) Applicability of transfer procedures;

(2) A description of each transfer system on the vessel including:

(i) A line diagram of the vessel's transfer piping, including the location of each valve, pump, control device, vent, and overflow;

(ii) The location of the shutoff valve or other isolation device that separates any bilge or ballast system from the transfer system; and

(iii) A description of and procedures for emptying the discharge containment system required by §§ 155.310 and 155.320;

(3) The number of persons required to be on duty during transfer operations;

(4) The duties by title of each officer, person in charge, tankerman, deckhand, and any other person required for each transfer operation;

(5) Procedures and duty assignments for tending the vessel's moorings during the transfer of oil or hazardous material;

(6) Procedures for operating the emergency shutdown and communications means required by §§ 155.780 and 155.785, respectively;

(7) Procedures for topping off tanks;

(8) Procedures for ensuring that all valves used during the transfer operations are closed upon completion of transfer;

(9) Procedures for reporting discharges of oil or hazardous material into the water; and

(10) Procedures for closing and opening the vessel openings in § 155.815.

(11) Statements explaining that each hazardous materials transfer hose is marked with either the name of each product which may be transferred through the hose or with letters, numbers or other symbols representing all such products and the location in the transfer procedures where a chart or list of the symbols used and a list of the compatible products which may be transferred through the hose can be found for consultation before each transfer.

(b) Exemptions or alternatives granted must be placed in the front of the transfer procedures.

(c) The vessel operator shall incorporate each amendment to the transfer procedures under § 155.760 in the procedures with the related existing requirement, or at the end of the procedures if not related to an existing requirement.

(d) If a vessel is fitted with a vapor control system, the transfer procedures must contain a description of the vapor collection system on the vessel which includes:

(1) A line diagram of the vessel's vapor collection system piping, including the location of each valve, control device, pressure-vacuum relief valve, pressure indicator, flame arresters, and detonation arresters, if fitted;

(2) The location of spill valves and rupture disks, if fitted;

(3) The maximum allowable transfer rate determined in accordance with 46 CFR 39.3001(d)(1) through (3);

(4) The initial transfer rate for each tank that complies with 46 CFR 39.3001(g);

(5) A table or graph of transfer rates and corresponding vapor collection system pressure drops calculated in accordance with 46 CFR 39.3001(c);

(6) The relief settings of each spill valve, rupture disk, and pressure-vacuum relief valve; and

(7) A description of and procedures for operating the vapor collection system, including the:

(i) Pre-transfer equipment inspection requirements;

(ii) Vapor line connection;

(iii) Closed gauging system;

(iv) High level alarm system, if fitted; and

(v) Independent automatic shutdown system, if fitted.

(e) If a cargo tank of a tank vessel is fitted with an overfill device, the transfer procedures must contain a description of the overfill device, including:

(1) The tank overfill device system and specific procedures for the person in charge to—

(i) Monitor the level of cargo in the tank; and

(ii) Shut down transfer operations in time to ensure that the cargo level in each tank does not exceed the maximum amount permitted by § 155.775(b).

(2) Pre-transfer overfill device equipment inspection and test requirements.

(Approved by the Office of Management and Budget under control number 1625–0030)

[CGD 75–124, 45 FR 7175, Jan. 31, 1980, as amended by CGD 88–102, 55 FR 25445, June 21, 1990; CGD 86–034, 55 FR 36254, Sept. 4, 1990; CGD 92–027, 58 FR 39662, July 26, 1993; CGD 90–071a, 59 FR 53291, Oct. 21, 1994; USCG–2006–25150, 71 FR 39210, July 12, 2006; USCG–1999–5150, 78 FR 42641, July 16, 2013]

§ 155.760 Amendment of transfer procedures.

(a) The COTP or OCMI may require the vessel operator of any vessel that is required to have transfer procedures under § 155.720 to amend those procedures if the COTP or OCMI finds that the transfer procedures do not meet the requirements of this part.

(b) The COTP or OCMI shall notify the vessel operator in writing of any inadequacies in the oil transfer procedures. The vessel operator may submit written information, views, and arguments on and proposals for amending the procedures within 14 days from the date of the COTP or OCMI notice. After considering all relevant material presented, the COTP or OCMI shall notify the vessel operator of any amendment required or adopted, or the COTP or OCMI may rescind the notice. The amendment becomes effective 30 days after the vessel operator receives the notice, unless the vessel operator petitions the Commandant to review the COTP or OCMI notice, in which case its effective date is delayed pending a decision by the Commandant. Petitions to the Commandant must be submitted in writing via the COTP or OCMI who issued the requirement to amend.

(c) If the COTP or OCMI finds that there is a condition requiring immediate action to prevent the discharge or risk of discharge that makes the procedure in paragraph (b) of this section impractical or contrary to the public interest, he or she may issue an amendment effective on the date the vessel operator receives notice of it. In such a case, the COTP or OCMI includes a brief statement of the reasons for the findings in the notice, and the vessel operator may petition the Commandant, in any manner, to review the amendment. The petition does not postpone the amendment.

[CGD 75–124, 45 FR 7175, Jan. 31, 1980, as amended by CGD 86–034, 55 FR 36255, Sept. 4, 1990]

§ 155.770 Draining into bilges.

No person may intentionally drain oil or hazardous material from any source into the bilge of a vessel.

[CGD 86–034, 55 FR 36255, Sept. 4, 1990]

§ 155.775 Maximum cargo level of oil.

(a) For the purposes of this section, ''oil'' has the same meaning as provided in § 151.05 of this chapter.

(b) A cargo tank on a tank vessel may not be filled with oil higher than—

(1) 98.5 percent of the cargo tank volume; or

(2) The level at which the overfill alarm required by § 155.480 is set.

[CGD 90–071a, 59 FR 53291, Oct. 21, 1994]

§ 155.780 Emergency shutdown.

(a) A tank vessel with a capacity of 250 or more barrels that is carrying oil or hazardous material as cargo must have on board an emergency means to enable the person in charge of a transfer operation to a facility, to another vessel, or within the vessel to stop the flow of oil or hazardous material.

(b) The means to stop the flow may be a pump control, a quick-acting, power actuated valve, or an operating procedure. If an emergency pump control is used, it must stop the flow of oil

or hazardous material if the oil or hazardous material could siphon through the stopped pump.

(c) The means to stop the flow must be operable from the cargo deck, cargo control room, or the usual operating station of the person in charge of the transfer operation.

[CGD 86–034, 55 FR 36255, Sept. 4, 1990]

§ 155.785 Communications.

(a) During vessel to vessel transfers, each tank vessel with a capacity of 250 or more barrels of cargo that is carrying oil or hazardous material must have a means that enables continuous two-way voice communication between the persons in charge of the transfer operations on both vessels.

(b) Each vessel must have a means, which may be the communication system itself, that enables a person on board each vessel to effectively indicate his desire to use the means of communication required by paragraph (a) of this section.

(c) The means required by paragraph (a) of this section must be usable and effective in all phases of the transfer operation and all conditions of weather.

(d) Portable radio devices used to comply with paragraph (a) of this section during the transfer of flammable or combustible liquids must be intrinsically safe, as defined in 46 CFR 110.15–100(i), and meet Class I, Division I, Group D requirements as defined in 46 CFR 111.80.

[CGD 75–124, 45 FR 7175, Jan. 31, 1980; 45 FR 43705, June 30, 1980, as amended by CGD 86–034, 55 FR 36255, Sept. 4, 1990]

§ 155.790 Deck lighting.

(a) A self-propelled vessel with a capacity of 250 or more barrels of oil or hazardous material that is conducting transfer operations between sunset and sunrise must have deck lighting that adequately illuminates—

(1) Each transfer operations work area and each transfer connection point in use on the vessel; and

(2) Each transfer operations work area and each transfer connection point in use on each barge, if any, moored to the vessel to or from which oil or hazardous material is being transferred;

(b) Where the illumination is apparently inadequate the OCMI or COTP may require verification by instrument of the levels of illumination. On a horizontal plane 3 feet above the deck the illumination must measure at least:

(1) 5.0 foot candles at transfer connection points; and

(2) 1.0 foot candle in transfer operations work areas.

(c) Lighting must be located or shielded so as not to mislead or otherwise interfere with navigation on the adjacent waterways.

[CGD 75–124, 45 FR 7175, Jan. 31, 1980, as amended by CGD 86–034, 55 FR 36255, Sept. 4, 1990]

§ 155.800 Transfer hose.

Hose used to transfer oil or hazardous material must meet the requirements of § 154.500 of this chapter.

[CGD 75–124, 45 FR 7175, Jan. 31, 1980, as amended by CGD 86–034, 55 FR 36255, Sept. 4, 1990]

§ 155.805 Closure devices.

(a) Each end of each transfer hose on board which is not connected for the transfer of oil or hazardous material must be blanked off with butterfly valves, wafer-type resilient seated valves, blank flanges, or other means acceptable to the COTP or OCMI.

(b) New, unused hose is exempt from the requirement in paragraph (a) of this section.

[CGD 75–124, 45 FR 7175, Jan. 31, 1980, as amended by CGD 86–034, 55 FR 36255, Sept. 4, 1990]

§ 155.810 Tank vessel security.

Operators of tank vessels carrying more oil cargo residue than normal in any cargo tank must assign a surveillance person or persons responsible for maintaining standard vessel security.

[USCG–2000–7641, 66 FR 55572, Nov. 2, 2001]

§ 155.815 Tank vessel integrity.

(a) Except as provided in paragraph (b) of this section, a tank vessel underway or at anchor must have all closure mechanisms on the following openings properly closed:

(1) Expansion trunk hatches;

(2) Ullage openings;

(3) Sounding ports;

(4) Tank cleaning openings; and

(5) Any other tank vessel openings that maintain the seaworthy condition of the tank vessel and prevent the inadvertent release of oil or hazardous material in the event of a tank vessel accident.

(b) No person may open any of the closure mechanisms in paragraph (a) of this section while the tank vessel is underway or at anchor except when authorized and supervised by a licensed or credentialed officer or the tankerman required by 46 CFR 31.15–5(a).

[CGD 75–124, 45 FR 7175, Jan. 31, 1980, as amended by CGD 86–034, 55 FR 36255, Sept. 4, 1990; USCG–2006–24371, 74 FR 11212, Mar. 16, 2009]

§ 155.820 Records.

The vessel operator shall keep a written record available for inspection by the COTP or OCMI of:

(a) The name of each person currently designated as a person in charge of transfer operations.

(b) The date and result of the most recent test and inspection of each item tested or inspected as required by § 156.170 of this chapter;

(c) The hose information required by § 154.500(e) and (g) of this chapter unless that information is marked on the hose; and

(d) The Declaration of Inspection as required by § 156.150(f) of this chapter.

[CGD 75–124, 45 FR 7175, Jan. 31, 1980, as amended by CGD 86–034, 55 FR 36255, Sept. 4, 1990]

Subpart D—Tank Vessel Response Plans for Oil

SOURCE: CGD 91–034, 61 FR 1081, Jan. 12, 1996, unless otherwise noted.

§ 155.1010 Purpose.

The purpose of this subpart is to establish requirements for oil spill response plans for certain vessels. The planning criteria in this subpart are intended for use in response plan development and the identification of resources necessary to respond to the oil spill scenarios prescribed during the planning process. The development of a response plan prepares the vessel owner or operator and the vessel's crew to respond to an oil spill. The specific criteria for response resources and their arrival times are not performance standards. They are planning criteria based on a set of assumptions that may not exist during an actual oil spill incident.

§ 155.1015 Applicability.

(a) Except as provided in paragraph (c) of this section, this subpart applies to each vessel that is constructed or adapted to carry, or that carries, oil in bulk as cargo or oil cargo residue, and that—

(1) Is a vessel of the United States;

(2) Operates on the navigable waters of the United States; or

(3) Transfers oil in a port or place subject to the jurisdiction of the United States.

(b) This subpart also applies to vessels which engage in oil lightering operations in the marine environment beyond the baseline from which the territorial sea is measured, when the cargo lightered is destined for a port or place subject to the jurisdiction of the United States.

(c) This subpart does not apply to the following types of vessels:

(1) Public vessels and vessels deemed public vessels under 14 U.S.C. 827.

(2) Vessels that, although constructed or adapted to carry oil in bulk as cargo or oil cargo residue, are not storing or carrying oil in bulk as cargo or oil cargo residue.

(3) Dedicated response vessels when conducting response operations.

(4) Vessels of opportunity when conducting response operations in a response area.

(5) Offshore supply vessels as defined in 46 U.S.C. 2101.

(6) Fishing or fishing tender vessels as defined in 46 U.S.C. 2101 of not more than 750 gross tons when engaged only in the fishing industry.

(7) Foreign-flag vessels engaged in innocent passage through the territorial sea or transit passage through a strait used for international navigation, unless bound for or departing from a port or place of the United States.

(8) Vessels carrying oil as a secondary cargo and measuring 400 gross tons or greater.

(d) Vessels covered by this subpart that are not operating within the navigable waters or the exclusive economic zone of the United States must meet all requirements of this subpart except for—

(1) Identifying and ensuring, through contract or other approved means, the availability of response resources including the shore-based spill management team;

(2) Providing the geographic-specific appendices required in §155.1035, 155.1040, or 155.1045, as appropriate; and

(3) Identifying and designating a qualified individual and alternate qualified individual required in §155.1026.

NOTE TO §155.1015: Response plan requirements for nontank vessels are found in subpart J of this part.

[CGD 91–034, 61 FR 1081, Jan. 12, 1996, as amended by USCG–2000–7641, 66 FR 55572, Nov. 2, 2001; USCG–2008–1070, 78 FR 60122, Sept. 30, 2013]

§155.1020 Definitions.

Except as otherwise defined in this section, the definitions in §155.110 apply to this subpart and subparts F and G of this part. For the purposes of this subpart only, the term:

Adverse weather means the weather conditions that will be considered when identifying response systems and equipment in a response plan for the applicable operating environment. Factors to consider include, but are not limited to, significant wave height, ice, temperature, weather-related visibility, and currents within the Captain of the Port (COTP) zone in which the systems or equipment are intended to function.

Animal fat means a non-petroleum oil, fat, or grease derived from animals and not specifically identified elsewhere in this part.

Average most probable discharge means a discharge of the lesser of 50 barrels of oil or 1 percent of the cargo from the vessel during cargo oil transfer operations to or from the vessel.

Bulk means any volume of oil carried in an integral tank of the vessel and oil transferred to or from a marine portable tank or independent tank while on board a vessel.

Captain of the Port (COTP) Zone means a zone specified in 33 CFR part 3 and, for coastal ports, the seaward extension of that zone to the outer boundary of the exclusive economic zone (EEZ).

Cargo means oil that is transported to and off-loaded at a destination by a vessel. It does not include—

(1) Oil carried in integral tanks, marine portable tanks, or independent tanks for use by machinery, helicopters, and boats carried aboard the vessel, or for use by helicopters that are directly supporting the vessel's primary operations; or

(2) Oil transferred from a towing vessel to a vessel in its tow to operate installed machinery other than the propulsion plant.

Contract or other approved means includes—

(1) A written contractual agreement between a vessel owner or operator and an oil spill removal organization. The agreement must identify and ensure the availability of specified personnel and equipment required under this subpart within stipulated response times in the specified geographic areas;

(2) Certification by the vessel owner or operator that specified personnel and equipment required under this subpart are owned, operated, or under the direct control of the vessel owner or operator, and are available within stipulated response times in the specified geographic areas;

(3) Active membership in a local or regional oil spill removal organization that has identified specified personnel and equipment required under this subpart that are available to respond to a discharge within stipulated response times in the specified geographic areas;

(4) A document which—

(i) Identifies the personnel, equipment, and services capable of being provided by the oil spill removal organization within stipulated response times in the specified geographic areas;

(ii) Sets out the parties' acknowledgment that the oil spill removal organization intends to commit the resources in the event of a response;

(iii) Permits the Coast Guard to verify the availability of the identified

response resources through tests, inspections, and exercises; and

(iv) Is referenced in the response plan; or

(5) With the written consent of the oil spill removal organization, the identification of an oil spill removal organization with specified equipment and personnel which are available within stipulated response times in the specified geographic areas. This paragraph is an other approved means for only—

(i) A vessel carrying oil as secondary cargo to meet the requirements under § 155.1045(i)(3);

(ii) A barge operating on rivers and canals to meet the requirements for lightering capability under §§ 155.1050(j), 155.1052(g), 155.1230(g), and 155.2230(g);

(iii) A vessel to meet the salvage and firefighting requirements in §§ 155.1050(j), 155.1052(f), 155.1230(f), and 155.2230(f); and

(iv) A vessel to meet the resource requirements in § 155.1052(c), 155.1230(c), and 155.2230(c).

Dedicated response vessel means a vessel of which the service is limited exclusively to oil and hazardous substance spill response-related activities, including spill recovery and transport, tanker escorting, deployment of spill response equipment, supplies, and personnel, and spill response-related training, testing, exercises, and research.

Dispersant-application platform means the vessel or aircraft outfitted with the dispersant-application equipment acting as the delivery system for the dispersant onto the oil spill.

Dispersant Mission Planner 2 (DMP2) means an Internet-downloadable application that estimates EDAC for different dispersant response systems. The NSFCC will use DPMP2 for evaluating OSRO dispersant classification levels.

Effective daily application capacity or *EDAC* means the estimated amount of dispersant that can be applied to a discharge by an application system, given the availability of supporting dispersant stockpiles, when operated in accordance with approved standards and within acceptable environmental conditions.

Exclusive economic zone means the zone contiguous to the territorial sea of United States extending to a distance up to 200 nautical miles from the baseline from which the breadth of the territorial sea is measured.

Great Lakes means Lakes Superior, Michigan, Huron, Erie, and Ontario, their connecting and tributary waters, the Saint Lawrence River as far as Saint Regis, and adjacent port areas.

Gulf Coast means for the purposes of dispersant application requirements, the regions encompassing the following Captain of the Port Zones:

(1) Corpus Christi, TX;

(2) Houston/Galveston, TX;

(3) Port Arthur, TX;

(4) Morgan City, LA;

(5) New Orleans, LA;

(6) Mobile, AL; and

(7) St. Petersburg, FL.

Higher volume port area means the following areas, including any water area within 50 nautical miles seaward of the entrance(s) to the specified port:

(1) Boston, MA.

(2) New York, NY.

(3) Delaware Bay and River to Philadelphia, PA.

(4) St. Croix, VI.

(5) Pascagoula, MS.

(6) Mississippi River from Southwest Pass, LA to Baton Rouge, LA. Note: Vessels destined for, departing from, or offloading at the Louisiana Offshore Oil Port are not considered to be operating in this higher volume port area.

(7) Lake Charles, LA.

(8) Sabine-Neches River, TX.

(9) Galveston Bay and Houston Ship Channel, TX.

(10) Corpus Christi, TX.

(11) Los Angeles/Long Beach Harbor, CA.

(12) San Francisco Bay, San Pablo Bay, Carquinez Strait, and Suisun Bay to Antioch, CA.

(13) Strait of Juan De Fuca at Port Angeles, WA to and including Puget Sound, WA.

(14) Prince William Sound, AK.

Inland area means the area shoreward of the boundary lines defined in 46 CFR part 7, except that in the Gulf of Mexico, it means the area shoreward of the lines of demarcation (COLREG lines) as defined in §§ 80.740 through 80.850 of

this chapter. The inland area does not include the Great Lakes.

Maximum extent practicable means the planned capability to respond to a worst case discharge in adverse weather, as contained in a response plan that meets the criteria in this subpart or in a specific plan approved by the Coast Guard.

Maximum most probable discharge means a discharge of—

(1) 2,500 barrels of oil for vessels with an oil cargo capacity equal to or greater than 25,000 barrels; or

(2) 10% of the vessel's oil cargo capacity for vessels with a capacity of less than 25,000 barrels.

Nearshore area means the area extending seaward 12 miles from the boundary lines defined in 46 CFR part 7, except in the Gulf of Mexico. In the Gulf of Mexico, a nearshore area is one extending seaward 12 miles from the line of demarcation (COLREG lines) as defined in §§ 80.740 through 80.850 of this chapter.

Non-persistent or Group I oil means a petroleum-based oil that, at the time of shipment, consists of hydrocarbon fractions—

(1) At least 50% of which by volume, distill at a temperature of 340 degrees C (645 degrees F); and

(2) At least 95% of which by volume, distill at a temperature of 370 degrees C (700 degrees F).

Non-petroleum oil means oil of any kind that is not petroleum-based. It includes, but is not limited to, animal fats and vegetable oils.

Ocean means the open ocean, offshore area, and nearshore area as defined in this subpart.

Nontank vessel means a vessel meeting the description provided in 33 CFR 155.5015(a).

Offshore area means the area up to 38 nautical miles seaward of the outer boundary of the nearshore area.

Oil field waste means non-pumpable drilling fluids with possible trace amounts of metal and oil.

Oil spill removal organization (OSRO) means an entity that provides oil spill response resources.

On-scene coordinator or OSC means the Federal official predesignated by the Coast Guard or Environmental Protection Agency to coordinate and direct Federal removal efforts at the scene of an oil or hazardous substance discharge as prescribed in the National Oil and Hazardous Substances Pollution Contingency Plan (National Contingency Plan) as published in 40 CFR part 300.

Open ocean means the area from 38 nautical miles seaward of the outer boundary of the nearshore area, to the seaward boundary of the exclusive economic zone.

Operating in compliance with the plan means operating in compliance with the provisions of this subpart, including ensuring the availability of the response resources by contract or other approved means and conducting the necessary training and exercises.

Operational effectiveness monitoring means monitoring concerned primarily with determining whether the dispersant was properly applied and how the dispersant is affecting the oil.

Operator means person who is an owner, a demise charterer, or other contractor, who conducts the operation of, or who is responsible for the operation of a vessel. For the purposes of this subpart only, the operator of a towing vessel is not, per se, considered the operator of a vessel being towed.

Other non-petroleum oil means an oil of any kind that is not a petroleum oil, an animal fat, or a vegetable oil.

Owner or vessel owner means any person holding legal or equitable title to a vessel; provided, however, that a person holding legal or equitable title to a vessel solely as security is not the owner. In a case where a Certificate of Documentation has been issued, the owner is the person or persons whose name or names appear on the vessel's Certificate of Documentation provided, however, that where a Certificate of Documentation has been issued in the name of a president or secretary of an incorporated company, such incorporated company is the owner.

Persistent oil means a petroleum-based oil that does not meet the distillation criteria for a non-persistent oil. For the purposes of this subpart, persistent oils are further classified based on specific gravity as follows:

(1) Group II—specific gravity of less than .85.

(2) Group III—specific gravity equal to or greater than .85 and less than .95.

(3) Group IV—specific gravity equal to or greater than .95 and less than or equal to 1.0.

(4) Group V—specific gravity greater than 1.0.

Petroleum oil means petroleum in any form, including but not limited to, crude oil, fuel oil, sludge, oil residue, and refined products.

Pre-authorization for dispersant use means an agreement, adopted by a regional response team in coordination with area committees, that authorizes the use of dispersants at the discretion of the Federal On-Scene Coordinator without the further approval of other Federal or State authorities. These pre-authorization areas are generally limited to particular geographic areas within each region.

Primary dispersant staging site means a site designated within a Captain of the Port zone which is identified as a forward staging area for dispersant-application platforms and the loading of dispersant stockpiles. Primary staging sites would normally be the planned location where the platform would load or reload dispersants prior to departing for application at the site of the discharge and may not be the location where dispersant stockpiles are stored or application platforms are home based.

Qualified individual and alternate qualified individual means a shore-based representative of a vessel owner or operator who meets the requirements of 33 CFR 155.1026.

Response activity means the containment and removal of oil from the water and shorelines, the temporary storage and disposal of recovered oil, or the taking of other actions as necessary to minimize or mitigate damage to public health or welfare or the environment.

Response resources means the personnel, equipment, supplies, and other capability necessary to perform the response activities identified in a response plan.

Rivers and canals mean bodies of water confined within the inland area, including the Intracoastal Waterways and other waterways artificially created for navigation, that have a project depth of 12 feet or less.

Secondary Cargo (see Vessels Carrying Oil as a Secondary Cargo)

Specific gravity means the ratio of the mass of a given volume of liquid at 15 degrees C (60 degrees F) to the mass of an equal volume of pure water at the same temperature.

Spill management team means the personnel identified to staff the organizational structure identified in a response plan to manage response plan implementation.

Substantial threat of such a discharge means any incident involving a vessel that may create a significant risk of discharge of cargo oil. Such incidents include, but are not limited to, groundings, strandings, collisions, hull damage, fire, explosion, loss of propulsion, flooding, on-deck spills, or other similar occurrences.

Tanker means a self-propelled tank vessel constructed or adapted primarily to carry oil or hazardous material in bulk in the cargo spaces.

Tier means the combination of required response resources and the times within which the resources must arrive on scene. Appendix B of this part, especially Tables 5 and 6, provide specific guidance on calculating the response resources required by each tier. Sections 155.1050(g), 155.1135, 155.1230(d), and 155.2230(d) set forth the required times within which the response resources must arrive on scene. Tiers are applied in three categories:

(1) Higher volume port areas;

(2) The Great Lakes; and

(3) All other operating environments, including rivers and canals, inland, nearshore, and offshore areas.

Vegetable oil means a non-petroleum oil or fat not specifically identified elsewhere in this part that is derived from plant seeds, nuts, kernels or fruits.

Vessel of opportunity means a vessel engaged in spill response activities that is normally and substantially involved in activities other than spill response and not a vessel carrying oil as a primary cargo.

Vessels carrying oil as a primary cargo means all vessels except dedicated response vessels carrying oil in bulk as cargo or cargo residue that have a Certificate of Inspection issued under 46 CFR Chapter I, subchapter D.

Vessels carrying oil as a secondary cargo means vessels, other than vessels carrying oil as a primary cargo, carrying oil in bulk as cargo or cargo residue pursuant to a permit issued under 46 CFR 30.01–5, 70.05–30, or 90.05–35, an International Oil Pollution Prevention (IOPP) or Noxious Liquid Substance (NLS) certificate required by 33 CFR §151.33 or §151.35; or any uninspected vessel that carries oil in bulk as cargo or cargo residue.

Worst case discharge means a discharge in adverse weather conditions of a vessel's entire oil cargo.

[CGD 91–034, 61 FR 1081, Jan. 12, 1996, as amended by USCG–2000–7641, 66 FR 55572, Nov. 2, 2001; USCG–1998–3417, 73 FR 80649, Dec. 31, 2008; USCG–2001–8661, 74 FR 45026, Aug. 31, 2009; USCG–2010–0351, 75 FR 36285, June 25, 2010; USCG–2008–1070, 78 FR 60122, Sept. 30, 2013]

§155.1025 Operating restrictions and interim operating authorization.

(a) Vessels subject to this subpart may not perform the following functions, unless operating in compliance with a plan approved under §155.1065:

(1) Handling, storing, or transporting oil on the navigable waters of the United States; or

(2) Transferring oil in any other port or place subject to U.S. jurisdiction.

(b) Vessels subject to this subpart may not transfer oil in a port or place subject to the jurisdiction of the United States, where the oil to be transferred was received from another vessel subject to this subpart during a lightering operation referred to in §155.1015(b), unless both vessels engaged in the lightering operation were operating at the time in compliance with a plan approved under §155.1065.

(c)(1) Notwithstanding the requirements of paragraph (a) of this section, a vessel may continue to handle, store, transport, transfer, or lighter oil for 2 years after the date of submission of a response plan pending approval of that plan, if the vessel owner or operator has received written authorization for continued operations from the Coast Guard.

(2) To receive this authorization, the vessel owner or operator must certify in writing to the Coast Guard that the owner or operator has identified and ensured the availability of, through contract or other approved means, the necessary private response resources to respond, to the maximum extent practicable, to a worst case discharge or substantial threat of such a discharge from their vessel as described in §155.1050, §155.1052, §155.1230, or §155.2230, as appropriate.

(d) With respect to paragraph (b) of this section, a vessel may not continue to handle, store, transport, transfer, or lighter oil if—

(1) The Coast Guard determines that the response resources identified in the vessel's certification statement do not meet the requirements of this subpart;

(2) The contracts or agreements cited in the vessel's certification statement are no longer valid;

(3) The vessel is not operating in compliance with the submitted plan; or

(4) The period of this authorization expires.

(e) An owner or operator of a vessel may be authorized by the applicable COTP to have that vessel make one voyage to transport or handle oil in a geographic specific area not covered by the vessel's response plan. All requirements of this subpart must be met for any subsequent voyages to that geographic specific area. To be authorized, the vessel owner or operator shall certify to the COTP in writing, prior to the vessel's entry into the COTP zone, that—

(1) A response plan meeting the requirements of this subpart (except for the applicable geographic specific appendix) or a shipboard oil pollution emergency plan approved by the flag state that meets the requirements of Regulation 37 of Annex I to the International Convention for the Prevention of Pollution from Ships, 1973 as modified by the Protocol of 1978 relating thereto, as amended (MARPOL 73/78);

(2) The approved response plan or the required plan section(s) is aboard the vessel;

(3) The vessel owner or operator has identified and informed the vessel master and the COTP of the designated qualified individual prior to the vessel's entry into the COTP zone; and

(4) The vessel owner or operator has identified and ensured the availability of, through contract or other approved

means, the private response resources necessary to respond, to the maximum extent practicable under the criteria in § 155.1050, § 155.1052, § 155.1230, or § 155.2230, as appropriate, to a worst case discharge or substantial threat of discharge from the vessel in the applicable COTP zone.

[CGD 91–034, 61 FR 1081, Jan. 12, 1996, as amended by USCG–2008–0179, 73 FR 35015, June 19, 2008]

§ 155.1026 Qualified individual and alternate qualified individual.

(a) The response plan must identify a qualified individual and at least one alternate who meet the requirements of this section. The qualified individual or alternate qualified individual must be available on a 24-hour basis.

(b) The qualified individual and alternate must—

(1) Speak fluent English;

(2) Except as set out in paragraph (c) of this section, be located in the United States;

(3) Be familiar with the implementation of the vessel response plan; and

(4) Be trained in the responsibilities of the qualified individual under the response plan.

(c) For Canadian flag vessels while operating on the Great Lakes or the Strait of Juan de Fuca and Puget Sound, WA, the qualified individual may be located in Canada if he or she meets all other requirements in paragraph (b) of this section.

(d) The owner operator shall provide each qualified individual and alternate qualified individual identified in the plan with a document designating them as a qualified individual and specifying their full authority to—

(1) Activate and engage in contracting with oil spill removal organization(s) and other response related resources identified in the plan;

(2) Act as a liaison with the predesignated Federal On-Scene Coordinator (OCS); and

(3) Obligate funds required to carry out response activities.

(e) The owner or operator of a vessel may designate an organization to fulfill the role of the qualified individual and alternate qualified individual. The organization must then identify a qualified individual and at least one alternate qualified individual who meet the requirements of this section. The vessel owner or operator is required to list in the response plan the organization, the person identified as the qualified individual, and the person or persons identified as the alternate qualified individual(s).

(f) The qualified individual is not responsible for—

(1) The adequacy of response plans prepared by the owner or operator; or

(2) Contracting or obligating funds for response resources beyond the full authority contained in their designation from the owner or operator of the vessel.

(g) The liability of a qualified individual is considered to be in accordance with the provisions of 33 U.S.C. 1321(c)(4).

§ 155.1030 General response plan requirements.

(a) The plan must cover all geographic areas of the United States in which the vessel intends to handle, store, or transport oil, including port areas and offshore transit areas.

(b) The plan must be written in English and, if applicable, in a language that is understood by the crew members with responsibilities under the plan.

(c) A vessel response plan must be divided into the following sections:

(1) General information and introduction.

(2) Notification procedures.

(3) Shipboard spill mitigation procedures.

(4) Shore-based response activities.

(5) List of contacts.

(6) Training procedures.

(7) Exercise procedures.

(8) Plan review and update procedures.

(9) On board notification checklist and emergency procedures (unmanned tank barges only).

(10) Geographic-specific appendix for each COTP zone in which the vessel or vessels operate.

(11) An appendix for vessel-specific information for the vessel or vessels covered by the plan.

(d) A vessel owner or operator with multiple vessels may submit one plan for each class of vessel (*i.e.*, manned

vessels carrying oil as primary cargo, unmanned vessels carrying oil as primary cargo, and vessels carrying oil as secondary cargo) with a separate vessel-specific appendix for each vessel covered by the plan and a separate geographic-specific appendix for each COTP zone in which the vessel(s) will operate.

(e) The required contents for each section of the plan are contained in §§ 155.1035, 155.1040, and 155.1045, as applicable to the type or service of the vessel.

(f) The response plan for a barge carrying nonhazardous oil field waste may follow the same format as that for a vessel carrying oil as a secondary cargo under § 155.1045 in lieu of the plan required under § 155.1035 or § 155.1040.

(g) A response plan must be divided into the sections described in paragraph (c) of this section unless the plan is supplemented with a cross-reference table to identify the location of the information required by this subpart.

(h) The information contained in a response plan must be consistent with the—

(1) National Oil and Hazardous Substances Pollution Contingency Plan (NCP) (40 CFR part 300) and the Area Contingency Plan(s) (ACP) in effect on the date 6 months prior to the submission date of the response plan; or

(2) More recent NCP and ACP(s).

(i) Copies of the submitted and approved response plan must be available as follows:

(1) The vessel owner or operator must ensure that they maintain one English language copy of the VRP, at a minimum the contents listed in paragraph (c)(1), (2), (3), (5), (6), (7), (9), and (10) of this section and a copy of the Coast Guard approval letter, onboard the vessel. In lieu of paper format, the vessel owner or operator may keep an electronic copy of the VRP and approval letter onboard the vessel. If applicable, additional copies of the required VRP sections must be in the language understood by crew members with responsibilities under the VRP and maintained onboard the vessel.

(2) The owner or operator of all unmanned tank barges shall ensure that one English language copy of the plan section listed in paragraph (c)(9) of this section and the Coast Guard approval letter is maintained aboard the barge. An electronic copy of the VRP is authorized.

(3) The vessel owner or operator must maintain a current copy of the entire plan, and ensure that each person identified as a qualified individual and alternate qualified individual in the plan has a current copy of the entire plan. An electronic copy of the VRP is authorized.

(j) If an owner or operator of a United States flag vessel informs the Coast Guard in writing at the time of the plan submission according to the procedures of § 155.1065, the owner or operator may address the provisions of Regulation 37 of MARPOL 73/78 if the owner or operator—

(1) Develops a vessel response plan under § 155.1030 and § 155.1035, § 155.1040, or § 155.1045, as applicable;

(2) Expands the plan to cover discharges of all oils defined under MARPOL, including fuel oil (bunker) carried on board. The owner or operator is not required to include these additional oils in calculating the planning volumes that are used to determine the quantity of response resources that the owner or operator must ensure through contract or other approved means;

(3) Provides the information on authorities or persons to be contacted in the event of an oil pollution incident as required by Regulation 37 of MARPOL 73/78. This information must include—

(i) An appendix containing coastal State contacts for those coastal States the exclusive economic zone of which the vessel regularly transits. The appendix should list those agencies or officials of administrations responsible for receiving and processing pollution incident reports; and

(ii) An appendix of port contacts for those ports at which the vessel regularly calls; and

(4) Expands the plan to include the procedures and point of contact on the ship for coordinating shipboard activities with national and local authorities in combating an oil spill incident. The plan should address the need to contact

the coastal State to advise them of action(s) being implemented and determine what authorization(s), if any, are needed.

(5) Provides a cross reference section to identify the location of the information required by § 155.1030(j).

(k) A vessel carrying oil as a secondary cargo may comply with the requirements of § 155.1045 by having a response plan approved under Regulation 37 of MARPOL 73/78 with the addition of the following—

(1) Identification of the qualified individual and alternate that meets the requirements of § 155.1026;

(2) A geographic specific appendix meeting the requirements of § 155.1045(i), including the identification of a contracted oil spill removal organization;

(3) Identification of a spill management team;

(4) An appendix containing the training procedures required by 155.1045(f); and

(5) An appendix containing the exercise procedures required by 155.1045(g).

(l) For plans submitted prior to the effective date of this final rule, the owner or operator of each vessel may elect to comply with any or all of the provisions of this final rule by amending or revising the appropriate section of the previously submitted plan.

[CGD 91–034, 61 FR 1081, Jan. 12, 1996, as amended by USCG–2008–0179, 73 FR 35015, June 19, 2008; USCG–2008–1070, 78 FR 60122, Sept. 30, 2013]

§ 155.1035 Response plan requirements for manned vessels carrying oil as a primary cargo.

(a) *General information and introduction*. This section of the response plan must include—

(1) The vessel's name, country of registry, call sign, official number, and International Maritime Organization (IMO) international number (if applicable). If the plan covers multiple vessels, this information must be provided for each vessel;

(2) The name, address, and procedures for contacting the vessel's owner or operator on a 24-hour basis;

(3) A list of the COTP zones in which the vessel intends to handle, store, or transport oil;

(4) A table of contents or index of sufficient detail to permit personnel with responsibilities under the response plan to locate the specific sections of the plan; and

(5) A record of change(s) page to record information on plan reviews, updates or revisions.

(b) *Notification procedures*. This section of the response plan must include the following notification information:

(1) A checklist with all notifications, including telephone or other contact numbers, in order of priority to be made by shipboard or shore-based personnel and the information required for those notifications. Notifications must include those required by—

(i) MARPOL 73/78 and 33 CFR part 153; and

(ii) Any applicable State.

(2) Identification of the person(s) to be notified of a discharge or substantial threat of a discharge of oil. If the notifications vary due to vessel location, the persons to be notified also must be identified in a geographic-specific appendix. This section must separately identify—

(i) The individual(s) or organization(s) to be notified by shipboard personnel; and

(ii) The individual(s) or organization(s) to be notified by shore-based personnel.

(3) The procedures for notifying the qualified individual(s) designated by the vessel's owner or operator.

(4) Descriptions of the primary and, if available, secondary communications methods by which the notifications will be made that should be consistent with the regulations in § 155.1035(b)(1).

(5) The information that is to be provided in the initial and any follow up notifications required by paragraph (b)(1) of this section.

(i) The initial notification may be submitted in accordance with IMO Resolution A648(16) ''General Principles for Ship Reporting Systems and Ship Reporting Requirements'' which is available through the Office of Operating and Environmental Standards (CG–522), U.S. Coast Guard Headquarters, 2100 2nd St., SW., Stop 7126, Washington, DC 20593–7126. It must include at least the following information:

(A) Vessel name, country of registry, call sign, and official number (if any);

(B) Date and time of the incident;

(C) Location of the incident;

(D) Course, speed, and intended track of vessel;

(E) Radio station(s) and frequencies guarded;

(F) Date and time of next report;

(G) Type and quantity of oil on board;

(H) Nature and detail of defects, deficiencies, and damage (e.g. grounding, collision, hull failure, etc.);

(I) Details of pollution, including estimate of oil discharged or threat of discharge;

(J) Weather and sea conditions on scene;

(K) Ship size and type;

(L) Actions taken or planned by persons on scene;

(M) Current conditions of the vessel; and

(N) Number of crew and details of injuries, if any.

(ii) After the transmission of the initial notification, as much as possible of the information essential for the protection of the marine environment as is appropriate to the incident must be reported to the appropriate on-scene coordinator in a follow-up report. This information must include—

(A) Additional details on the type of cargo on board;

(B) Additional details on the condition of the vessel and ability to transfer cargo, ballast, and fuel;

(C) Additional details on the quantity, extent and movement of the pollution and whether the discharge is continuing;

(D) Any changes in the on-scene weather or sea conditions; and

(E) Actions being taken with regard to the discharge and the movement of the ship.

(6) Identification of the person(s) to be notified of a vessel casualty potentially affecting the seaworthiness of a vessel and the information to be provided by the vessel's crew to shore-based personnel to facilitate the assessment of damage stability and stress.

(c) *Shipboard spill mitigation procedures*. This section of the response plan must include—

(1) Procedures for the crew to mitigate or prevent any discharge or a substantial threat of such discharge of oil resulting from shipboard operational activities associated with internal or external cargo transfers. Responsibilities of vessel personnel should be identified by job title. These procedures must address personnel actions in the event of a—

(i) Transfer system leak;

(ii) Tank overflow; or

(iii) Suspected cargo tank or hull leak;

(2) Procedures in the order of priority for the crew to mitigate or prevent any discharge or a substantial threat of such a discharge in the event of the following casualties or emergencies:

(i) Grounding or stranding.

(ii) Collision.

(iii) Explosion or fire, or both.

(iv) Hull failure.

(v) Excessive list.

(vi) Equipment failure (e.g. main propulsion, steering gear, etc.);

(3) Procedures for the crew to deploy discharge removal equipment as required under subpart B of this part;

(4) The procedures for internal transfers of cargo in an emergency;

(5) The procedures for ship-to-ship transfers of cargo in an emergency:

(i) The format and content of the ship-to-ship transfer procedures must be consistent with the Ship to Ship Transfer Guide (Petroleum) (incorporated by reference; see §155.140) published jointly by the International Chamber of Shipping and the Oil Companies International Marine Forum (OCIMF).

(ii) The procedures must identify the response resources necessary to carry out the transfers, including—

(A) Fendering equipment (ship-to-ship only);

(B) Transfer hoses and connection equipment;

(C) Portable pumps and ancillary equipment;

(D) Lightering and mooring masters (ship-to-ship only); and

(E) Vessel and barge brokers (ship-to-ship only).

(iii) Reference can be made to a separate oil transfer procedure and

lightering plan carried aboard the vessel, provided that safety considerations are summarized in the response plan.

(iv) The location of all equipment and fittings, if any, carried aboard the vessel to perform such transfers must be identified;

(6) The procedures and arrangements for emergency towing, including the rigging and operation of any emergency towing equipment, including that required by subpart B of this part, aboard the vessel;

(7) The location, crew responsibilities, and procedures for use of shipboard equipment which may be carried to mitigate an oil discharge;

(8) The crew responsibilities, if any, for recordkeeping and sampling of spilled oil. Any requirements for sampling must address safety procedures to be followed by the crew;

(9) The crew's responsibilities, if any, to initiate a response and supervise shore-based response resources;

(10) Damage stability and hull stress considerations when performing shipboard mitigation measures. This section must identify and describe—

(i) Activities in which the crew is trained and qualified to execute absent shore-based support or advice; and

(ii) The information to be collected by the vessel's crew to facilitate shore-based assistance; and

(11)(i) Location of vessel plans necessary to perform salvage, stability, and hull stress assessments. A copy of these plans must be maintained ashore by either the vessel owner or operator or the vessel's recognized classification society unless the vessel has prearranged for a shore-based damage stability and residual strength calculation program with the vessel's baseline strength and stability characteristics pre-entered. The response plan must indicate the shore location and 24-hour access procedures of the calculation program or the following plans:

(A) General arrangement plan.

(B) Midship section plan.

(C) Lines plan or table of offsets.

(D) Tank tables.

(E) Load line assignment.

(F) Light ship characteristics.

(ii) The plan must identify the shore location and 24-hour access procedures for the computerized, shore-based damage stability and residual structural strength calculation programs required by § 155.240.

(d) *Shore-based response activities.* This section of the response plan must include the following information:

(1) The qualified individual's responsibilities and authority, including immediate communication with the Federal on-scene coordinator and notification of the oil spill removal organization(s) identified in the plan.

(2) If applicable, procedures for transferring responsibility for direction of response activities from vessel personnel to the shore-based spill management team.

(3) The procedures for coordinating the actions of the vessel owner or operator or qualified individual with the predesignated Federal on-scene coordinator responsible for overseeing or directing those actions.

(4) The organizational structure that will be used to manage the response actions. This structure must include the following functional areas and must further include information for key components within each functional area:

(i) Command and control;

(ii) Public information;

(iii) Safety;

(iv) Liaison with government agencies;

(v) Spill response operations;

(vi) Planning;

(vii) Logistics support; and

(viii) Finance.

(5) The responsibilities of, duties of, and functional job descriptions for each oil spill management team position within the organizational structure identified in paragraph (d)(4) of this section.

(e) *List of contacts.* The name, location, and 24-hour contact information for the following key individuals and organizations must be included in this section of the response plan or, if more appropriate, in a geographic-specific appendix and referenced in this section of the response plan:

(1) Vessel owner or operator.

(2) Qualified individual and alternate qualified individual for the vessel's area of operation.

(3) Applicable insurance provider, representative, or surveyor for the vessel's area of operation.

(4) The vessel's local agent(s) for the vessel's area of operation or a reference to the 24-hour point of contact as listed on the vessel's notice of arrival.

(5) Person(s) within the oil spill removal organization to notify for activation of that oil spill removal organization for the three spill scenarios identified in paragraph (i)(5) of this section for the vessel's area of operation.

(6) Person(s) within the identified response organization to notify for activating that organization to provide:

(i) The required emergency lightering required by §155.1050(j), §155.1052(g), §155.1230(g), or §155.2230(g), as applicable to the type of service of the vessel; and

(ii) The required salvage and firefighting required by §155.1050(j), §155.1052(e), §155.1230(e), and §155.2230(e), as applicable to the type of service of the vessel.

(7) Person(s) to notify for activation of the spill management team for the spill response scenarios identified in paragraph (i)(5) of this section for the vessel's area of operation.

(f) *Training procedures*. This section of the response plan must address the training procedures and programs of the vessel owner or operator to meet the requirements in §155.1055.

(g) *Exercise procedures*. This section of the response plan must address the exercise program to be carried out by the vessel owner or operator to meet the requirements in §155.1060.

(h) *Plan review, update, revision, amendment, and appeal procedure*. This section of the response plan must address—

(1) The procedures to be followed by the vessel owner or operator to meet the requirements of §155.1070; and

(2) The procedures to be followed for any post-discharge review of the plan to evaluate and validate its effectiveness.

(i) *Geographic-specific appendices for each COTP zone in which a vessel operates*. A geographic-specific appendix must be included for each COTP zone identified. The appendices must include the following information or identify the location of such information within the plan:

(1) A list of the geographic areas (port areas, rivers and canals, Great Lakes, inland, nearshore, offshore, and open ocean areas) in which the vessel intends to handle, store, or transport oil within the applicable COTP zone.

(2) The volume and group of oil on which the required level of response resources are calculated.

(3) Required Federal or State notifications applicable to the geographic areas in which a vessel operates.

(4) Identification of the qualified individuals.

(5) Identification of the oil spill removal organization(s) that are identified and ensured available, through contract or other approved means, and the spill management team to respond to the following spill scenarios:

(i) Average most probable discharge.

(ii) Maximum most probable discharge.

(iii) Worst case discharge.

(6) The organization(s) identified to meet the requirements of paragraph (i)(5) of this section must be capable of providing the equipment and supplies necessary to meet the requirements of §§155.1050, 155.1052, 155.1230, and 155.2230, as appropriate, and sources of trained personnel to continue operation of the equipment and staff the oil spill removal organization(s) and spill management team identified for the first 7 days of the response.

(7) The appendix must list the response resources and related information required under §§155.1050, 155.1052, 155.1230, 155.2230, and Appendix B of this part, as appropriate.

(8) If an oil spill removal organization(s) has been evaluated by the Coast Guard and their capability has been determined to equal or exceed the response capability needed by the vessel, the appendix may identify only the organization and their applicable classification and not the information required in paragraph (i)(7) of this section.

(9) For vessels that handle, store, or transport Group I through Group V petroleum oils, the appendix must also separately list the resource providers identified to provide the salvage, vessel

firefighting, and lightering capabilities required in this subpart.

(10) For vessels that handle, store, or transport Group II through Group IV petroleum oils, and that operate in waters where dispersant use pre-authorization agreements exist, the appendix must also separately list the resource providers and specific resources, including appropriately trained dispersant-application personnel, necessary to provide, if appropriate, the dispersant capabilities required in this subpart. All resource providers and resources must be available by contract or other approved means. The dispersant resources to be listed within this section must include the following:

(i) Identification of each primary dispersant staging site to be used by each dispersant-application platform to meet the requirements of §155.1050(k) of this chapter;

(ii) Identification of the platform type, resource provider, location, and dispersant payload for each dispersant-application platform identified. Location data must identify the distance between the platform's home base and the identified primary dispersant-staging site(s) for this section.

(iii) For each unit of dispersant stockpile required to support the effective daily application capacity (EDAC) of each dispersant-application platform necessary to sustain each intended response tier of operation, identify the dispersant product resource provider, location, and volume. Location data must include the distance from the stockpile to the primary staging sites where the stockpile would be loaded onto the corresponding platforms. If an oil spill removal organization has been evaluated by the Coast Guard and its capability has been determined to meet the response capability needed by the owner or operator, the section may identify the oil spill removal organization only, and not the information required in paragraphs (i)(10)(i) through (i)(10)(iii) of this section.

(11) The appendix must also separately list the resource providers and specific resources necessary to provide oil-tracking capabilities required in this subpart. The oil tracking resources to be listed within this section must include the following:

(i) The identification of a resource provider; and

(ii) The type and location of aerial surveillance aircraft that have been ensured available, through contract or other approved means, to meet the oil tracking requirements of §155.1050(l) of this chapter.

(j) *Appendices for vessel-specific information*. This section must include for each vessel covered by the plan the following information:

(1) List of the vessel's principal characteristics.

(2) Capacities of all cargo, fuel, lube oil, ballast, and fresh water tanks.

(3) The total volume and cargo groups of oil cargo that would be involved in the—

(i) Maximum most probable discharge; and

(ii) Worst case discharge.

(4) Diagrams showing location of all tanks.

(5) General arrangement plan (can be maintained separately aboard the vessel providing the response plan identifies the location).

(6) Midships section plan (can be maintained separately aboard the vessel providing the response plan identifies the location).

(7) Cargo and fuel piping diagrams and pumping plan, as applicable (can be maintained separately aboard the vessel providing the response plan identifies the location).

(8) Damage stability data (can be maintained separately providing the response plan identifies the location).

(9) Location of cargo and fuel stowage plan for vessel (normally maintained separately aboard the vessel).

(10) Location of information on the name, description, physical and chemical characteristics, health and safety hazards, and spill and firefighting procedures for the oil cargo aboard the vessel. A material safety data sheet meeting the requirements of 29 CFR 1910.1200, cargo information required by 33 CFR 154.310, or equivalent will meet

this requirement. This information can be maintained separately.

[CGD 91–034, 61 FR 1081, Jan. 12, 1996, as amended by CGD 96–026, 61 FR 33666, June 28, 1996; USCG–2005–21531, 70 FR 36349, June 23, 2005; USCG–2008–0179, 73 FR 35015, June 19, 2008; USCG–2001–8661, 74 FR 45027, Aug. 31, 2009; USCG–2010–0351, 75 FR 36285, June 25, 2010; USCG–2008–1070, 78 FR 60122, Sept. 30, 2013]

§ 155.1040 Response plan requirements for unmanned tank barges carrying oil as a primary cargo.

(a) *General information and introduction.* This section of the response plan must include—

(1) A list of tank barges covered by the plan, which must include the country of registry, call sign, IMO international numbers (if applicable), and official numbers of the listed tank barges;

(2) The name, address, and procedures for contacting the barge's owner or operator on a 24-hour basis;

(3) A list of the COTP zones in which the tank barges covered by the plan intend to handle, store, or transport oil;

(4) A table of contents or index of sufficient detail to permit personnel with responsibilities under the response plan to locate the specific sections of the plan; and

(5) A record of change(s) page used to record information on plan reviews, updates or revisions.

(b) *Notification procedures.* This section of the response plan must include the following notification information:

(1) A checklist with all notifications. The checklist must include notifications required by MARPOL 73/78, 33 CFR part 153, and any applicable State, including telephone or other contact numbers, in the order of priority and the information required for those notifications to be made by the—

(i) Towing vessel;

(ii) Vessel owner or operator; or

(iii) Qualified individual.

(2) Identification of the person(s) to be notified of a discharge or substantial threat of a discharge of oil. If the notifications vary due to the location of the barge, the persons to be notified also must be identified in a geographic-specific appendix. This section must separately identify—

(i) The individual(s) or organization(s) to be notified by the towing vessel; and

(ii) The individual(s) or organization(s) to be notified by shore-based personnel.

(3) The procedures for notifying the qualified individuals designated by the barge's owner or operator.

(4) Identification of the primary and, if available, secondary communications methods by which the notifications will be made, consistent with the requirements of paragraph (b)(1) of this section.

(5) The information that is to be provided in the initial and any follow-up notifications required by paragraph (b)(1) of this section.

(i) The initial notification information must include at least the following information:

(A) Towing vessel name (if applicable);

(B) Tank barge name, country of registry, and official number;

(C) Date and time of the incident;

(D) Location of the incident;

(E) Course, speed, and intended track of towing vessel (if applicable);

(F) Radio station(s) frequencies guarded by towing vessel (if applicable);

(G) Date and time of next report;

(H) Type and quantity of oil on board;

(I) Nature and details of defects, deficiencies, and damage (e.g., grounding, collision, hull failure, etc.);

(J) Details of pollution, including estimate of oil discharged or threat of discharge;

(K) Weather and sea conditions on scene;

(L) Barge size and type;

(M) Actions taken or planned by persons on scene;

(N) Current condition of the barge; and

(O) Details of injuries, if any.

(ii) After the transmission of the initial notification, as much as possible of the information essential for the protection of the marine environment as is appropriate to the incident must be reported to the appropriate on-scene coordinator in a follow-up report. This information must include—

(A) Additional detail on the type of cargo on board;

(B) Additional details on the condition of the barge and ability to transfer cargo, ballast, and fuel;

(C) Additional details on the quantity, extent and movement of the pollution and whether the discharge is continuing;

(D) Any changes in the on-scene weather or sea conditions; and

(E) Actions being taken with regard to the discharge and the movement of the vessel.

(6) Identification of the person(s) to be notified of a vessel casualty potentially affecting the seaworthiness of a vessel and the information to be provided by the towing vessel personnel or tankermen, as applicable, to shore-based personnel to facilitate the assessment of damage stability and stress.

(c) *Shipboard spill mitigation procedures*. This section of the response plan must include—

(1) Procedures to be followed by the tankerman, as defined in 46 CFR 35.35–1, to mitigate or prevent any discharge or a substantial threat of such a discharge of oil resulting from operational activities and casualties. These procedures must address personnel actions in the event of a—

(i) Transfer system leak;

(ii) Tank overflow; or

(iii) Suspected cargo tank or hull leak;

(2) Procedures in the order of priority for the towing vessel or barge owner or operator to mitigate or prevent any discharge or a substantial threat of such a discharge of oil in the event of the following casualties or emergencies:

(i) Grounding or stranding;

(ii) Collision;

(iii) Explosion or fire, or both;

(iv) Hull failure;

(v) Excessive list; and

(3) Procedures for tankermen or towing vessel crew to employ discharge removal equipment required by subpart B of this part;

(4) The procedures for the internal transfer of cargo in an emergency;

(5) The procedures for ship-to-ship transfers of cargo in an emergency:

(i) The procedures must identify the response resources necessary to carry out the transfers, including—

(A) Fendering equipment (ship-to-ship only);

(B) Transfer hoses and connection equipment;

(C) Portable pumps and ancillary equipment; and

(D) Lightering vessels (ship-to-ship only).

(ii) Reference can be made to separate oil transfer procedures or a lightering plan provided that safety considerations are summarized in the response plan.

(iii) The location of all equipment and fittings, if any, to perform such transfers must be identified;

(6) The procedures and arrangements for emergency towing, including the rigging and operation of any emergency towing equipment, including that required by subpart B of this part aboard the barge;

(7) The location and procedures for use of equipment stowed aboard either the barge or towing vessel to mitigate an oil discharge;

(8) The responsibilities of the towing vessel crew and facility or fleeting area personnel, if any, to initiate a response and supervise shore-based response resources;

(9) Damage stability, if applicable, and hull stress considerations when performing on board mitigation measures. This section must identify and describe—

(i) Activities in which the towing vessel crew or tankerman is trained and qualified to execute absent shore-based support or advice;

(ii) The individuals who shall be notified of a casualty potentially affecting the seaworthiness of the barge; and

(iii) The information that must be provided by the towing vessel to facilitate the assessment of damage stability and stress; and

(10)(i) Location of barge plans necessary to perform salvage, stability, and hull stress assessments. A copy of these barge plans must be maintained ashore by either the barge owner or operator or the vessel's recognized classification society. The response plan must indicate the shore location and

24-hour access procedures of the following plans:

(A) General arrangement plan.

(B) Midship section plan.

(C) Lines plan or table of offsets, as available.

(D) Tank tables; and

(ii) Plans for offshore oil barges must identify the shore location and 24-hour access procedures for the computerized shore-based damage stability and residual structural strength calculation programs required by § 155.240.

(d) *Shore-based response activities.* This section of the response plan must include the following information:

(1) The qualified individual's responsibilities and authority, including immediate communication with the Federal on-scene coordinator and notification of the oil spill removal organization(s) identified in the plan.

(2) If applicable, procedures for transferring responsibility for direction of response activities from towing vessel personnel or tankermen to the shore-based spill management team.

(3) The procedures for coordinating the actions of the barge owner or operator of qualified individual with the action of the predesignated Federal on-scene coordinator responsible for overseeing or directing those actions.

(4) The organizational structure that will manage the barge owner or operator's response actions. This structure must include the following functional areas and must further include information for key components within each functional area:

(i) Command and control;

(ii) Public information;

(iii) Safety;

(iv) Liaison with government agencies;

(v) Spill response operations;

(vi) Planning;

(vii) Logistics support; and

(viii) Finance.

(5) The responsibilities of, duties of, and functional job descriptions for each oil spill management team position within the organizational structure identified in paragraph (d)(4) of this section.

(e) *List of contacts.* The name, location, and 24-hour contact information for the following key individuals and organizations must be included in this section or, if more appropriate, in a geographic-specific appendix and referenced in this section:

(1) Barge owner or operator.

(2) Qualified individual and alternate qualified individual for the tank barge's area of operation.

(3) Applicable insurance representatives or surveyors for the barge's area(s) of operation.

(4) Person(s) within the oil spill removal organization to notify for activation of that oil spill removal organization for the spill scenarios identified in paragraph (j)(5) of this section for the barges's area(s) of operation.

(5) Person(s) within the identified response organization to notify for activating that organization to provide:

(i) The required emergency lightering required by §§ 155.1050(j), 155.1052(g), 155.1230(g), and 155.2230(g), as applicable to the type of service of the barge(s); and

(ii) The required salvage and fire fighting required by §§ 155.1050(j), 155.1052(e), 155.1230(e), and 155.2230(e), as applicable to the type of service of the barge(s).

(6) Person(s) to notify for activation of the spill management team for the spill response scenarios identified in paragraph (j)(5) of this section for the vessel's area of operation.

(f) *Training procedures.* This section of the response plan must address the training procedures and programs of the barge owner or operator to meet the requirements in § 155.1055.

(g) *Exercise procedures.* This section of the response plan must address the exercise program carried out by the barge owner or operator to meet the requirements in § 155.1060.

(h) *Plan review, update, revisions amendment, and appeal procedure.* This section of the response plan must address—

(1) The procedures to be followed by the barge owner or operator to meet the requirements of § 155.1070; and

(2) The procedures to be followed for any post-discharge review of the plan to evaluate and validate its effectiveness.

(i) *On board notification checklist and emergency procedures.* This portion of the response plan must be maintained in the documentation container aboard

the unmanned barge. The owner or operator of an unmanned tank barge subject to this section shall provide the personnel of the towing vessel, fleeting area, or facility that the barge may be moored at with the information required by this paragraph and the responsibilities that the plan indicates will be carried out by these personnel. The on board notification checklist and emergency procedures must include—

(1) The toll-free number of the National Response Center;

(2) The name and procedures for contacting a primary qualified individual and at least one alternate on a 24-hour basis;

(3) The name, address, and procedure for contacting the vessel's owner or operator on a 24-hour basis;

(4) The list of information to be provided in the notification by the reporting personnel;

(5) A statement of responsibilities of and actions to be taken by reporting personnel after an oil discharge or substantial threat of such discharge; and

(6) The information contained in paragraph (c)(1) of this section.

(j) *Geographic-specific appendices for each COTP zone in which a tank barge operates.* A geographic-specific appendix must be included for each COTP zone identified. The appendices must include the following information or identify the location of such information within the plan:

(1) A list of the geographic areas (port areas, rivers and canals, Great Lakes, inland, nearshore, offshore, and open ocean areas) in which the barge intends to handle, store, or transport oil within the applicable COTP zone.

(2) The volume and group of oil on which the required level of response resources are calculated.

(3) Required Federal or State notifications applicable to the geographic areas in which the barge operates.

(4) Identification of the qualified individuals.

(5) Identification of the oil spill removal organization(s) that are identified and ensured available, through contract or other approved means and the spill management team to provide the response resources necessary to respond to the following spill scenarios:

(i) An average most probable discharge.

(ii) A maximum most probable discharge.

(iii) A worst case discharge to the maximum extent practicable.

(6) The organization(s) identified to meet the provisions of paragraph (j)(5) of this section must be capable of providing the equipment and supplies necessary to meet the provisions of §§ 155.1050, 155.1052, 155.1230, and 155.2230, as appropriate, and sources of trained personnel to continue operation of the equipment and staff the oil spill removal organization(s) and spill management team identified for the first seven days of the response.

(7) The appendix must list the response resources and related information required under §§ 155.1050, 155.1052, 155.1230, 155.2230, and Appendix B of this part, as appropriate.

(8) If the oil spill removal organization(s) providing the necessary response resources has been evaluated by the Coast Guard and their capability has been determined to equal or exceed the response capability needed by the vessel, the appendix may identify only the organization and their applicable classification and not the information required in paragraph (j)(7) of this section.

(9) The appendix must include a separate listing of the resource providers identified to provide the salvage, vessel firefighting, and lightering capabilities required in this subpart.

(10) The appendix must include a separate listing of the resource providers and specific resources necessary to provide, if appropriate, the dispersant capabilities required in this subpart. The dispersant resources to be listed within this section must include:

(i) Identification of a primary dispersant-staging site or sites to be used by each dispersant-application platform that is ensured available, through contract or other approved means, to meet the requirements of § 155.1050(k);

(ii) Identification of the type, resource provider, location, and dispersant payload for each dispersant-application platform identified and ensured available. Location data must identify the distance between the platform's home base and the identified primary

dispersant staging sites for this section; and,

(iii) For each unit of dispersant stockpile required to support the effective daily application capacity (EDAC) of each dispersant-application platform necessary to sustain each intended response tier of operation, identification of the dispersant product resource provider, location, and volume. Location data must include the stockpile's distance to the primary staging sites where it will be loaded onto the corresponding platforms. If an oil spill removal organization has been evaluated by the Coast Guard and its capability has been determined to equal or exceed the response capability needed by the owner or operator, the appendix may identify only the oil spill removal organization, and not the information required in paragraphs (j)(10)(i) through (j)(10)(iii) of this section.

(11) The appendix must include a separate listing of the resource providers and specific resources necessary to provide oil-tracking capabilities required in this subpart. The oil tracking resources listed within this section must include:

(i) The identification of a resource provider; and,

(ii) The type and location of aerial surveillance aircraft that have been ensured available, through contract or other approved means, to meet the oil tracking requirements of § 155.1050(l) of this chapter.

(k) *Appendices for barge-specific information.* Because many of the tank barges covered by a response plan may be of the same design, this information does not need to be repeated provided the plan identifies the tank barges to which the same information would apply. The information must be part of the response plan unless specifically noted. This section must include for each barge covered by the plan the following information:

(1) List of the principal characteristics of the vessel.

(2) Capacities of all cargo, fuel, lube oil, and ballast tanks.

(3) The total volumes and cargo group(s) of oil cargo that would be involved in the—

(i) Maximum most probable discharge; and

(ii) Worst case discharge.

(4) Diagrams showing location of all tanks aboard the barge.

(5) General arrangement plan (can be maintained separately providing that the location is identified).

(6) Midships section plan (can be maintained separately providing that the location is identified).

(7) Cargo and fuel piping diagrams and pumping plan, as applicable (can be maintained separately providing that the location is identified).

(8) Damage stability data, if applicable.

(9) Location of cargo and fuel stowage plan for barge(s) (normally maintained separately).

(10) Location of information on the name, description, physical and chemical characteristics, health and safety hazards, and spill and firefighting procedures for the oil cargo aboard the barge. A material safety data sheet meeting the requirements of 29 CFR 1910.1200, cargo information required by 33 CFR 154.310, or equivalent will meet this requirement. This information can be maintained separately.

[CGD 91–034, 61 FR 1081, Jan. 12, 1996, as amended by USCG–2001–8661, 74 FR 45027, Aug. 31, 2009; USCG–2010–0351, 75 FR 36285, June 25, 2010]

§ 155.1045 Response plan requirements for vessels carrying oil as a secondary cargo.

(a) *General information and introduction.* This section of the response plan must include—

(1) The vessel's name, country of registry, call sign, official number, and IMO international number (if applicable). If the plan covers multiple vessels, this information must be provided for each vessel;

(2) The name, address, and procedures for contacting the vessel's owner or operator on a 24-hour basis;

(3) A list of COTP zones in which the vessel intends to handle, store, or transport oil;

(4) A table of contents or index of sufficient detail to permit personnel with responsibilities under the response plan to locate the specific sections of the plan; and

(5) A record of change(s) page used to record information on plan updates or revisions.

(6) As required in paragraph (c) of this section, the vessel owner or operator must list in his or her plan the total volume of oil carried in bulk as cargo.

(i) For vessels that transfer a portion of their fuel as cargo, 25 percent of the fuel capacity of the vessel plus the capacity of any oil cargo tank(s) will be assumed to be the cargo volume for determining applicable response plan requirements unless the vessel owner or operator indicates otherwise.

(ii) A vessel owner or operator can use a volume less than 25 percent if he or she submits historical data with the plan that substantiates the transfer of a lower percentage of its fuel capacity between refuelings.

(b) *Notification procedures.* This section of the response plan must include the following notification information:

(1) A checklist with all notifications, including telephone or other contact numbers, in the order of priority to be made by shipboard or shore-based personnel and the information required for those notifications. Notifications must include those required by—

(i) MARPOL 73/78 and 33 CFR part 153; and

(ii) Any applicable State.

(2) Identification of the person(s) to be notified of a discharge or substantial threat of discharge of oil. If notifications vary due to vessel location, the person(s) to be notified also must be identified in a geographic-specific appendix. This section must separately identify—

(i) The individual(s) or organization(s) to be notified by shipboard personnel; and

(ii) The individual(s) or organization(s) to be notified by shore-based personnel.

(3) The procedures for notifying the qualified individual and alternate qualified individual.

(4) Descriptions of the primary and, if available, secondary communication methods by which the notifications will be made, consistent with the requirements in paragraph (b)(1) of this section.

(5) The information that is to be provided in the initial and any follow-up notifications required by paragraph (b)(1) of this section.

(i) The initial notification may be submitted in accordance with IMO Resolution A648(16) ''General Principles for Ship Reporting Systems and Ship Reporting Requirements.'' It must include at least the following information:

(A) Vessel name, country of registry, call sign, IMO international number (if applicable), and official number (if any);

(B) Date and time of the incident;

(C) Location of the incident;

(D) Course, speed, and intended track of vessel;

(E) Radio station(s) and frequencies guarded;

(F) Date and time of next report;

(G) Type and quantity of oil on board;

(H) Nature and detail of defects, deficiencies, and damage (e.g., grounding, collision, hull failure, etc.);

(I) Details of pollution, including estimate of oil discharged or threat of discharge;

(J) Weather and sea conditions on scene;

(K) Ship size and type;

(L) Actions taken or planned by persons on scene;

(M) Current conditions of the vessel; and

(N) Number of crew and details of injuries, if any.

(ii) After the transmission of the initial notification, as much as possible of the information essential for the protection of the marine environment as is appropriate to the incident must be reported to the appropriate on-scene coordinator in a follow-up report. This information must include—

(A) Additional details on the type of cargo on board;

(B) Additional details on the condition of the vessel and ability to transfer cargo, ballast, and fuel;

(C) Additional details on the quantity, extent and movement of the pollution and whether the discharge is continuing;

(D) Any changes in the on-scene weather or sea conditions; and

(E) Actions being taken with regard to the discharge and the movement of the ship.

(c) *Shipboard spill mitigation procedures.* This section of the response plan must identify the vessel's total volumes of oil carried in bulk as cargo and meet the applicable requirements of this paragraph as in paragraph (a)(6) of this section.

(1) For vessels carrying 100 barrels or less of oil in bulk as cargo, the plan must include a basic emergency action checklist for vessel personnel including notification and actions to be taken to prevent or mitigate any discharge or substantial threat of such a discharge of oil from the vessel.

(2) For vessels carrying over 100 barrels of oil but not exceeding 5,000 barrels of oil in bulk as cargo, the plan must include—

(i) Detailed information on actions to be taken by vessel personnel to prevent or mitigate any discharge or substantial threat of such a discharge of oil from the vessel due to operational activities or casualties;

(ii) Detailed information on damage control procedures to be followed by vessel personnel;

(iii) Detailed procedures for internal or external transfer of oil in bulk as cargo in an emergency; and

(iv) Procedures for use of any equipment carried aboard the vessel for spill mitigation.

(3) For vessels carrying over 5,000 barrels of oil as a secondary cargo, the plan must provide the information required by §155.1035(c) for shipboard spill mitigation procedures.

(4) For all vessels, the plan must include responsibilities and actions to be taken by vessel personnel, if any, to initiate a response and supervise shore-based response resources.

(d) *Shore-based response activities.* This section of the response plan must include the following information:

(1) The qualified individual's responsibilities and authority, including immediate communication with the Federal on-scene coordinator and notification of the oil spill removal organization(s) identified in the plan.

(2) If applicable, procedures for transferring responsibility for direction of response activities from vessel personnel to the shore-based spill management team.

(3) The procedures for coordinating the actions of the vessel owner or operator with the actions of the predesignated Federal on-scene coordinator responsible for overseeing or directing those actions.

(4) The organizational structure that will be used to manage the response actions. This structure must include the following functional areas and must further include information for key components within each functional area:

(i) Command and control;

(ii) Public information;

(iii) Safety;

(iv) Liaison with government agencies;

(v) Spill response operations;

(vi) Planning;

(vii) Logistics support; and

(viii) Finance.

(5) The responsibilities, duties, and functional job description for each oil spill management team member within the organizational structure identified in paragraph (d)(4) of this section.

(e) *List of contacts.* The name, location, and 24-hour contact information for the following key individuals or organizations must be included in this section or, if more appropriate, in a geographic-specific appendix and referenced in this section:

(1) Vessel owner or operator, and if applicable, charterer.

(2) Qualified individual and alternate qualified individual for the vessel's area of operation.

(3) Vessel's local agent(s), if applicable, for the vessel's area of operation.

(4) Applicable insurance representatives or surveyors for the vessel's area of operation.

(5) Person(s) within the identified oil spill removal organization(s) to notify for activation of the oil spill removal organization(s) identified under paragraph (i)(3) of this section for the vessel's area of operation.

(6) Person(s) to notify for activation of the spill management team.

(f) *Training procedures.* (1) This section of the response plan must address the training procedures and programs of the vessel owner or operator. The

vessel owner or operator shall ensure that—

(i) All personnel with responsibilities under the plan receive training in their assignments and refresher training as necessary, and participate in exercises required under paragraph (g) of this section. Documented work experience can be used instead of training; and

(ii) Records of this training are maintained aboard the vessel, at the U.S. location of the spill management team, or with the qualified individual. The plan must specify where the records are located.

(2) Nothing in this section relieves the vessel owner or operator from responsibility to ensure that all private shore-based response personnel are trained to meet the Occupational Safety and Health Administration (OSHA) standards for emergency response operations in 29 CFR 1910.120.

(g) *Exercise procedures.* This section of the response plan must address the exercise program carried out by the vessel owner or operator to evaluate the ability of vessel and shore-based personnel to perform their identified functions in the plan. The required exercise frequency for each category of vessel is as follows:

(1) For vessels carrying 100 barrels or less of oil as cargo—

(i) On board spill mitigation procedures and qualified individual notification exercises must be conducted annually; and

(ii) Shore-based oil spill removal organization exercises must be conducted biennially.

(2) For vessels carrying over 100 barrels and up to 5,000 barrels of oil in bulk as cargo—

(i) On board emergency procedures and qualified individual notification exercises must be conducted quarterly; and

(ii) Shore-based oil spill removal organization exercises must be conducted annually.

(3) Vessels carrying over 5,000 barrels of oil in bulk as cargo must meet the exercise requirement of § 155.1060.

(h) *Plan review, update, revision, amendment, and appeal procedures.* This section of the response plan must address—

(1) The procedures to be followed by the vessel owner or operator to meet the requirement of § 155.1070; and

(2) The procedures to be followed for any post-discharge review of the plan to evaluate and validate its effectiveness

(i) *Geographic-specific appendices for each COTP zone in which a vessel operates.* A geographic-specific appendix must be included for each COTP zone identified. The appendix must include the following information or identify the location of such information within the plan:

(1) Required Federal or State notifications applicable to the geographic areas in which a vessel operates.

(2) Identification of the qualified individuals.

(3) A list of the oil spill removal organization(s) and the spill management team(s) available to respond to the vessel's worst case oil discharge in each COTP zone in which a vessel operates. The oil spill removal organization(s) identified must be capable of commencing oil spill containment and on-water recovery within the response times listed for Tier 1 in § 155.1050(g); providing temporary storage of recovered oil; and conducting shoreline protection and cleanup operations. An oil spill removal organization may not be identified in the plan unless the organization has provided written consent to being identified in the plan as an available resource.

(j) *Appendices for vessel-specific information.* This section must include for each vessel covered by the plan the following information:

(1) List of the vessel's principal characteristics (*i.e.*, length, beam, gross tonnage, etc.).

(2) Capacities of all cargo, fuel, lube oil, ballast, and fresh water tanks.

(3) The total volume and cargo groups of oil cargo that would be involved in the—

(i) Maximum most probable discharge; and

(ii) Worst case discharge.

(4) Diagrams showing location of all tanks.

(5) Cargo and fuel piping diagrams and pumping plan as applicable. These diagrams and plans can be maintained separately aboard the vessel providing

the response plan identifies the location.

(6) Location of information on the name, description, physical and chemical characteristics, health and safety hazards, and spill and firefighting procedures for the oil cargo aboard the vessel. A material safety data sheet meeting the requirements of 29 CFR 1910.1200, cargo information required by 33 CFR 154.310, or the equivalent, will meet this requirement. This information can be maintained separately on board the vessel, providing the response plan identifies the location.

§ 155.1050 Response plan development and evaluation criteria for vessels carrying groups I through IV petroleum oil as a primary cargo.

(a) The following criteria must be used to evaluate the operability of response resources identified in the response plan for the specified operating environment:

(1) Table 1 of appendix B of this part.

(i) The criteria in table 1 of appendix B of this part are to be used solely for identification of appropriate equipment in a response plan.

(ii) These criteria reflect conditions used for planning purposes to select mechanical response equipment and are not conditions that would limit response actions or affect normal vessel operations.

(2) Limitations that are identified in the Area Contingency Plans for the COTP zones in which the vessel operates, including—

(i) Ice conditions;

(ii) Debris;

(iii) Temperature ranges; and

(iv) Weather-related visibility.

(b) The COTP may reclassify a specific body of water or location within the COTP zone. Any reclassifications will be identified in the applicable Area Contingency Plan. Reclassifications may be to—

(1) A more stringent operating environment if the prevailing wave conditions exceed the significant wave height criteria during more than 35 percent of the year; or

(2) A less stringent operating environment if the prevailing wave conditions do not exceed the significant wave height criteria for the less stringent operating environment during more than 35 percent of the year.

(c) Response equipment must—

(1) Meet or exceed the criteria listed in table 1 of appendix B of this part;

(2) Be capable of functioning in the applicable operating environment; and

(3) Be appropriate for the petroleum oil carried.

(d) The owner or operator of a vessel that carries groups I through IV petroleum oil as a primary cargo shall identify in the response plan and ensure the availability of, through contract or other approved means, the response resources that will respond to a discharge up to the vessel's average most probable discharge.

(1) For a vessel that carries groups I through IV petroleum oil as its primary cargo, the response resources must include—

(i) Containment boom in a quantity equal to twice the length of the largest vessel involved in the transfer and capable of being deployed at the site of oil transfer operations—

(A) Within 1 hour of detection of a spill, when the transfer is conducted between 0 and 12 miles from the nearest shoreline; or

(B) Within 1 hour plus travel time from the nearest shoreline, based on an on-water speed of 5 knots, when the transfer is conducted over 12 miles up to 200 miles from the nearest shoreline; and

(ii) Oil recovery devices and recovered oil storage capacity capable of being at the transfer site—

(A) Within 2 hours of the detection of a spill during transfer operations, when the transfer is conducted between 0 and 12 miles from the nearest shoreline; or

(B) Within 1 hour plus travel time from the nearest shoreline, based on an on-water speed of 5 knots, when the transfer is conducted over 12 miles up to 200 miles from the nearest shoreline.

(2) For locations of multiple vessel transfer operations, a vessel may identify the same equipment as identified by other vessels, provided that each vessel has ensured access to the equipment through contract or other approved means. Under these circumstances, prior approval by the Coast Guard is not required for temporary changes in the contracted oil

spill removal organization under § 155.1070(c)(5).

(3) The owner or operator of a vessel conducting transfer operations at a facility required to submit a response plan under 33 CFR 154.1017 is required to plan for and identify the response resources required in paragraph (d)(1) of this section. However, the owner or operator is not required to ensure by contract or other means the availability of such resources.

(e) The owner or operator of a vessel carrying groups I through IV petroleum oil as a primary cargo must identify in the response plan and ensure the availability of, through contract or other approved means, the response resources necessary to respond to a discharge up to the vessel's maximum most probable discharge volume.

(1) These resources must be positioned such that they can arrive at the scene of a discharge within—

(i) 12 hours of the discovery of a discharge in higher volume port areas and the Great Lakes;

(ii) 24 hours of the discovery of a discharge in all rivers and canals, inland, nearshore and offshore areas; and

(iii) 24 hours of the discovery of a discharge plus travel time from shore for open ocean areas.

(2) The necessary response resources include sufficient containment boom, oil recovery devices, and storage capacity for any recovery of up to the maximum most probable discharge planning volume.

(3) The response plan must identify the storage location, make, model, and effective daily recovery capacity of each oil recovery device that is identified for plan credit.

(4) The response resources identified for responding to a maximum most probable discharge must be positioned to be capable of meeting the planned arrival times in this paragraph. The COTP with jurisdiction over the area in which the vessel is operating must be notified whenever the identified response resources are not capable of meeting the planned arrival times.

(f) The owner or operator of a vessel carrying groups I through IV petroleum oil as a primary cargo must identify in the response plan and ensure the availability of, through contract or other approved means, the response resources necessary to respond to discharges up to the worst case discharge volume of the oil cargo to the maximum extent practicable.

(1) The location of these resources must be suitable to meet the response times identified for the applicable geographic area(s) of operation and response tier.

(2) The response resources must be appropriate for—

(i) The capacity of the vessel;

(ii) Group(s) of petroleum oil carried as cargo; and

(iii) The geographic area(s) of vessel operation.

(3) The resources must include sufficient boom, oil recovery devices, and storage capacity to recover the planning volumes.

(4) The response plan must identify the storage location, make, model, and effective daily recovery capacity of each oil recovery device that is identified for plan credit.

(5) The guidelines in appendix B of this part must be used for calculating the quantity of response resources required to respond at each tier to the worst case discharge to the maximum extent practicable.

(6) When determining response resources necessary to meet the requirements of this paragraph (f)(6), a portion of those resources must be capable of use in close-to-shore response activities in shallow water. The following percentages of the response equipment identified for the applicable geographic area must be capable of operating in waters of 6 feet or less depth:

(i) Open ocean—none.

(ii) Offshore—10 percent.

(iii) Nearshore, inland, Great Lakes, and rivers and canals—20 percent.

(7) Response resources identified to meet the requirements of paragraph (f)(6) of this section are exempt from the significant wave height planning requirements of table 1 of appendix B of this part.

(g) Response equipment identified to respond to a worst case discharge must be capable of arriving on scene within the times specified in this paragraph for the applicable response tier in a higher volume port area, Great Lakes, and in other areas. Response times for

these tiers from the time of discovery of a discharge are—

	Tier 1	Tier 2	Tier 3
Higher volume port area (except tankers in Prince William Sound covered by § 155.1135).	12 hrs	36 hrs	60 hrs
Great Lakes	18 hrs	42 hrs	66 hrs
All other rivers & canals, inland, nearshore, and offshore areas.	24 hrs	48 hrs	72 hrs
Open ocean (plus travel time from shore).	24 hrs+	48 hrs+	72 hrs+

(h) For the purposes of arranging for response resources through contract or other approved means, response equipment identified for Tier 1 plan credit must be capable of being mobilized and enroute to the scene of a discharge within 2 hours of notification. The notification procedures identified in the plan must provide for notification and authorization for mobilization of identified Tier 1 response resources—

(1) Either directly or through the qualified individual; and

(2) Within 30 minutes of a discovery of a discharge or substantial threat of discharge.

(i) Response resources identified for Tier 2 and Tier 3 plan credit must be capable of arriving on scene within the time listed for the applicable tier.

(j) *Salvage* (including lightering) and *marine firefighting* requirements are found in subpart I of this part.

(k) The owner or operator of a vessel carrying groups II through IV petroleum oil as a primary cargo that operates in any inland, nearshore, or offshore area with pre-authorization for dispersant use must identify in their response plan, and ensure availability through contract or other approved means, of response resources capable of conducting dispersant operations within those areas.

(1) Dispersant response resources must be capable of commencing dispersant-application operations at the site of a discharge within 7 hours of the decision by the Federal On-Scene Coordinator to use dispersants.

(2) Dispersant response resources must include all of the following:

(i) Sufficient dispersant capability for application as required by paragraph (k)(3) of this section. Any dispersants identified in a response plan must be of a type listed on the National Oil and Hazardous Substances Pollution Contingency Plan Product Schedule (contained in 40 CFR part 300, and available online from the U.S. Government Printing Office).

(ii) Dispersant-application platforms capable of delivering and applying dispersant in the amounts required by paragraph (k)(3) of this section. At least 50 percent of each effective daily application capacity (EDAC) tier requirement must be achieved through the use of fixed wing aircraft-based application platforms. The adequacy of dispersant-application platforms not detailed within the Dispersant Mission Planner 2 must be documented by presentation of independent evaluation materials (e.g., field tests and reports of actual use).

(iii) Dispersant-application personnel trained in and capable of applying dispersants within the performance criteria in ASTM F1413–07 (incorporated by reference, see § 155.140). The adequacy of dispersant-application systems not fully covered by ASTM F1413–07, such as fire monitor-type applicators, must be documented by presentation of independent evaluation materials (e.g., laboratory tests, field tests, and reports of actual use).

(iv) Dispersant-application systems ensured to be available, including trained personnel, that are capable of applying dispersants in accordance with the recommended procedures in ASTM F1737–07 (incorporated by reference, see § 155.140).

TABLE 155.1050(k)—TIERS FOR EFFECTIVE DAILY APPLICATION CAPABILITY

	Response time for completed application	Dispersant application dispersant: oil treated in gallons (Gulf Coast)	Dispersant application dispersant: oil treated in gallons All other U.S.
Tier 1	12	8,250:165,000	4,125:82,500
Tier 2	36	23,375:467,000	23,375:467,000

TABLE 155.1050(k)—TIERS FOR EFFECTIVE DAILY APPLICATION CAPABILITY—Continued

	Response time for completed application	Dispersant application dispersant: oil treated in gallons (Gulf Coast)	Dispersant application dispersant: oil treated in gallons All other U.S.
Tier 3	60	23,375:467,000	23,375:467,000
Total	60	55,000:1,100,000	50,875:1,017,500

NOTE: Gulf Coast Tier 1 is higher due to greater potential spill size and frequency in that area, and it is assumed that dispersant stockpiles would be centralized in the Gulf area. Alternative application ratios may be considered based on submission to Coast Guard Headquarters, Office of Incident Management & Preparedness (CG–533) of peer-reviewed scientific evidence of improved capability.

(3) Dispersant stockpiles, application platforms, and other supporting resources must be ensured available in a quantity and type sufficient to treat a vessel's worst case discharge (as determined by using the criteria in Section 8 of appendix B), or in quantities sufficient to meet the requirements in Table 155.1050(k), whichever is the lesser amount.

(l) The owner or operator of a vessel carrying groups I through IV petroleum oil as a primary cargo must identify in the response plan, and ensure their availability through contract or other approved means, response resources necessary to provide aerial oil tracking to support oil spill assessment and cleanup activities. Vessels operating on inland rivers are not required to comply with this paragraph.

(1) Aerial oil tracking resources must be capable of arriving at the site of a discharge in advance of the arrival of response resources identified in the plan for tiers 1, 2, and 3 Worst Case Discharge response times, and for a distance up to 50 nautical miles from shore (excluding inland rivers).

(2) Aerial oil tracking resources must include the following:

(i) Appropriately located aircraft and personnel capable of meeting the response time requirement for oil tracking in § 155.1050(l)(1) of this section;

(ii) Sufficient numbers of aircraft, pilots, and trained observation personnel to support oil spill operations, commencing upon initial assessment, and capable of coordinating on-scene cleanup operations, including dispersant, insitu burning, and mechanical recovery operations;

(iii) Observation personnel must be trained in the protocols of oil spill reporting and assessment, including estimation of slick size, thickness, and quantity. Observation personnel must be trained in the use of assessment techniques in ASTM F1779–08 (incorporated by reference, see § 155.140), and familiar with the use of pertinent guides, including, but not limited to, NOAA's ''Open Water Oil Identification Job Aid for Aerial Observation'' and the ''Characteristic Coastal Habitats'' guide; and

(iv) The capability of supporting oil spill removal operations continuously for three 10-hour operational periods during the initial 72 hours of the discharge.

(m) [Reserved]

(n) The owner or operator of a vessel carrying groups I through IV petroleum oil as a primary cargo must identify in the response plan and ensure the availability of, through contract or other approved means, response resources necessary to perform shoreline protection operations.

(1) The response resources must include the quantities of boom listed in table 2 of appendix B of this part, based on the areas in which the vessel operates.

(2) Vessels that intend to offload their cargo at the Louisiana Offshore Oil Port (LOOP) marine terminal are not required to comply with the requirements of this paragraph when they are within the offshore area and under one of the following conditions:

(i) Approaching or departing the LOOP marine terminal within the LOOP Shipping Safety Fairway, as defined in 33 CFR 166.200.

(ii) Moored at the LOOP marine terminal for the purposes of cargo transfer operations or anchored in the designated anchorage area awaiting discharge.

(o) The owner or operator of a vessel carrying groups I through IV petroleum oil as a primary cargo must identify in the response plan and ensure the availability of, through contract or other approved means, an oil spill removal organization capable of effecting a shoreline cleanup operation commensurate with the quantity of emulsified petroleum oil to be planned for in shoreline cleanup operations.

(1) The shoreline cleanup resources required must be determined as described in appendix B of this part.

(2) Vessels that intend to offload their cargo at the Louisiana Offshore Oil Port (LOOP) marine terminal are not required to comply with the requirements of this paragraph when they are within the offshore area and under one of the following conditions:

(i) Approaching or departing the LOOP marine terminal within the LOOP Shipping Safety Fairway as defined in 33 CFR 166.200.

(ii) Moored at the LOOP marine terminal for the purposes of cargo transfer operations or anchored in the designated anchorage area awaiting discharge.

(p) Appendix B of this part sets out caps that recognize the practical and technical limits of response capabilities for which an individual vessel owner or operator can contract in advance. Table 6 in appendix B lists the contracting caps that are applicable, as of February 18, 1993, and that are slated to apply on February 18, 1998. The owner or operator of a vessel carrying groups I through IV petroleum oil as a primary cargo, whose required daily recovery capacity exceeds the applicable contracting caps in table 6, shall identify commercial sources of additional equipment equal to twice the cap listed for each tier or the amount necessary to reach the calculated planning volume, whichever is lower, to the extent that this equipment is available. The equipment so identified must be capable of arriving on scene no later than the applicable tier response times contained in §155.1050(g) or as quickly as the nearest available resource permits. A response plan must identify the specific sources, locations, and quantities of this additional equipment. No contract is required.

(q) The Coast Guard will continue to evaluate the environmental benefits, cost efficiency and practicality of increasing mechanical recovery capability requirements. This continuing evaluation is part of the Coast Guard's long term commitment to achieving and maintaining an optimum mix of oil spill response capability across the full spectrum of response modes. As best available technology demonstrates a need to evaluate or change mechanical recovery capacities, a review of cap increases and other requirements contained within this subpart may be performed. Any changes in the requirements of this section will occur through a public notice and comment process. During this review, the Coast Guard will determine if established caps remain practicable and if increased caps will provide any benefit to oil spill recovery operations. The review will include and evaluation of:

(1) Best available technologies for containment and recovery;

(2) Oil spill tracking technology;

(3) High rate response techniques;

(4) Other applicable response technologies; and

(5) Increases in the availability of private response resources.

[CGD 91–034, 61 FR 1081, Jan. 12, 1996, as amended by USCG–2008–0179, 73 FR 35015, June 19, 2008; USCG–1998–3417, 73 FR 80649, Dec. 31, 2008; USCG–2001–8661, 74 FR 45028, Aug. 31, 2009]

§ 155.1052 Response plan development and evaluation criteria for vessels carrying group V petroleum oil as a primary cargo.

(a) Owners and operators of vessels that carry group V petroleum oil as a primary cargo must provide information in their plan that identifies—

(1) Procedures and strategies for responding to discharges up to a worst case discharge of group V petroleum oils to the maximum extent practicable; and

(2) Sources of the equipment and supplies necessary to locate, recover, and mitigate such a discharge.

(b) Using the criteria in Table 1 of Appendix B of this part, an owner or operator of a vessel carrying group V petroleum oil as a primary cargo must ensure that any equipment identified in a response plan is capable of operating in the conditions expected in the geographic area(s) in which the vessel operates. When evaluating the operability of equipment, the vessel owner or operator must consider limitations that are identified in the Area Contingency Plans for the COTP zones in which the vessel operates, including—

(1) Ice conditions;

(2) Debris;

(3) Temperature ranges; and

(4) Weather-related visibility.

(c) The owner or operator of a vessel carrying group V petroleum oil as a primary cargo must identify in the response plan and ensure, through contract or other approved means, the availability of required equipment, including—

(1) Sonar, sampling equipment, or other methods for locating the oil on the bottom or suspended in the water column;

(2) Containment boom, sorbent boom, silt curtains, or other methods for containing oil that may remain floating on the surface or to reduce spreading on the bottom;

(3) Dredges, pumps, or other equipment necessary to recover oil from the bottom and shoreline; and

(4) Other appropriate equipment necessary to respond to a discharge involving the type of oil carried.

(d) Response resources identified in a response plan under paragraph (c) of this section must be capable of being deployed within 24 hours of discovery of a discharge to the port nearest the area where the vessel is operating. An oil spill removal organization may not be listed in the plan unless the oil spill removal organization has provided written consent to be listed in the plan as an available resource.

(e) The owner or operator of a vessel carrying group V petroleum oil as a primary cargo shall identify in the response plan and ensure the availability of the following resources through contract or other approved means—

(1) A salvage company with appropriate expertise and equipment; and

(2) A company with vessel firefighting capability that will respond to casualties in the area(s) in which the vessel is operating.

(f) Vessel owners or operators must identify intended sources of the resources required under paragraph (e) of this section capable of being deployed to the areas in which the vessel will operate. A company may not be listed in the plan unless the company has provided written consent to be listed in the plan as an available resource. To meet this requirement in a response plan submitted for approval or reapproval on or after February 18, 1998, the vessel owner or operator must identify both the intended sources of this capability and demonstrate that the resources are capable of being deployed to the port nearest to the area where the vessel operates within 24 hours of discovery of a discharge.

(g) The owner or operator of a vessel carrying group V petroleum oil as a primary cargo shall identify in the response plan and ensure the availability of certain resources required by §§155.1035(c)(5)(ii) and 155.1040(c)(5)(i), as applicable, through contract or other approved means.

(1) Resources must include—

(i) Fendering equipment;

(ii) Transfer hoses and connection equipment; and

(iii) Portable pumps and ancillary equipment necessary to offload the vessel's largest cargo tank in 24 hours of continuous operation.

(2) Resources must be capable of reaching the locations in which the vessel operates within the stated times following notification:

(i) Inland, nearshore, and Great Lakes waters—12 hours.

(ii) Offshore waters and rivers and canals—18 hours.

(iii) Open ocean waters—36 hours.

(3) For barges operating in rivers and canals as defined in this subpart, the requirements of this paragraph (g)(3) may be met by listing resources capable of being deployed in an area within the response times in paragraph (g)(2) of this section. A vessel owner or operator may not identify such resources in a plan unless the response organization has provided written consent to be

identified in a plan as an available resource.

§ 155.1055 Training.

(a) A response plan submitted to meet the requirements of § 155.1035 or § 155.5035 must identify the training to be provided to persons having responsibilities under the plan, including members of the vessel crew, the qualified individual, and the spill management team. A response plan submitted to meet the requirements of § 155.1040 must identify the training to be provided to the spill management team, the qualified individual, and other personnel in § 155.1040 with specific responsibilities under the plan including tankermen and members of the towing vessel crew. The training program must differentiate between that training provided to vessel personnel and that training provided to shore-based personnel. Appendix C of this part provides additional guidance regarding training.

(b) A vessel owner or operator shall ensure the maintenance of records sufficient to document this training and make them available for inspection upon request by the Coast Guard. Records must be maintained for 3 years following completion of training. The response plan must identify the location of training records, which must be—

(1) On board the vessel;

(2) With the qualified individual; or

(3) At a U.S. location of the spill management team.

(c) A vessel owner or operator may identify equivalent work experience which fulfills specific training requirements.

(d) The vessel owner or operator shall ensure that any oil spill removal organization identified in a response plan to meet the requirements of this part maintains records sufficient to document training for the organization's personnel. These records must be available for inspection upon request by the Coast Guard. Records must be maintained for 3 years following completion of training.

(e) Nothing in this section relieves the vessel owner or operator from the responsibility to ensure that all private shore-based response personnel are trained to meet the Occupational Safety and Health Administration (OSHA) standards for emergency response operations in 29 CFR 1910.120.

(f) A training plan may be prepared in accordance with Training Elements for Oil Spill Response to satisfy the requirements of this section.

[CGD 91–034, 61 FR 1081, Jan. 12, 1996, as amended by USCG–2008–1070, 78 FR 60123, Sept. 30, 2013]

§ 155.1060 Exercises.

(a) A vessel owner or operator required by § 155.1035, § 155.1040, or § 155.5035 to have a response plan shall conduct exercise as necessary to ensure that the plan will function in an emergency. Both announced and unannounced exercises must be included. The following are the minimum exercise requirements for vessels covered by this subpart:

(1) Qualified individual notification exercises, which must be conducted quarterly;

(2) Emergency procedures exercises, which must be conducted quarterly;

(3) Shore-based spill management team tabletop exercises, which must be conducted annually. In a triennial period, at least one of these exercises must include a worst case discharge scenario;

(4) Oil spill removal organization equipment deployment exercises, which must be conducted annually; and

(5) An exercise of the entire response plan, which must be conducted every 3 years. The vessel owner or operator shall design the exercise program so that all components of the response plan are exercised at least once every 3 years. All of the components do not have to be exercised at one time; they may be exercised over the 3-year period through the required exercises or through an area exercise.

(b) Annually, at least one of the exercises listed in § 155.1060(a) (2) and (4) must be unannounced. An unannounced exercise is one in which the personnel participating in the exercise have not been advised in advance of the exact date, time, and scenario of the exercise.

(c) A vessel owner or operator shall participate in unannounced exercises, as directed by the Coast Guard COTP.

The objectives of the unannounced exercises will be to evaluate notifications and equipment deployment for responses to average most probable discharge spill scenarios outlined in vessel response plans. The unannounced exercises will be limited to four per area per year, an area being that geographic area for which a separate and distinct Area Contingency Plan has been prepared, as described in the Oil Pollution Act of 1990. After participating in an unannounced exercise directed by a COTP, the owner or operator will not be required to participate in another unannounced exercise for at least 3 years from the date of the exercise.

(d) A vessel owner or operator shall participate in area exercises as directed by the applicable on-scene coordinator. The area exercises will involve equipment deployment to respond to the spill scenario developed by the exercise design team, of which the vessel owner or operator will be a member. After participating in an area exercise, a vessel owner or operator will not be required to participate in another area exercise for at least 6 years.

(e) The vessel owner or operator shall ensure that adequate exercise records are maintained. The following records are required:

(1) On board the vessel, records of the qualified individual notification exercises and the emergency procedures exercises. These exercises may be documented in the ship's log or may be kept in a separate exercise log.

(2) At the United States' location of either the qualified individual, spill management team, the vessel owner or operator, or the oil spill removal organization, records of exercises conducted off the vessel. Response plans must indicate the location of these records.

(f) Records described in paragraph (e) of this section must be maintained and available to the Coast Guard for 3 years following completion of the exercises.

(g) The response plan submitted to meet the requirements of this subpart must specify the planned exercise program. The plan shall detail the exercise program, including the types of exercises, frequencies, scopes, objectives, and the scheme for exercising the entire response plan every 3 years.

(h) Compliance with the National Preparedness for Response Exercise Program (PREP) Guidelines will satisfy the vessel response plan exercise requirements. These guidelines are available from the TASC DEPT Warehouse, 33141Q 75th Avenue, Landover, MD 20875 (fax: 301–386–5394, stock number USCG-X0241). Compliance with an alternative program that meets the requirements of paragraph (a) of this section and has been approved under § 155.1065 will also satisfy the vessel response plan exercise requirements.

NOTE TO PARAGRAPH (h): The PREP guidelines are available online at *http://www.uscg.mil/hq/g-m/nmc/response/msprep.pdf*.

[CGD 91–034, 61 FR 1081, Jan. 12, 1996, as amended by 68 FR 37741, June 25, 2003; USCG–2008–0179, 73 FR 35015, June 19, 2008; USCG–2008–1070, 78 FR 60123, Sept. 30, 2013]

§ 155.1062 Inspection and maintenance of response resources.

(a) The owner or operator of a vessel required to submit a response plan under this part must ensure that—

(1) Containment booms, skimmers, vessels, and other major equipment listed or referenced in the plan are periodically inspected and maintained in good operating condition, in accordance with manufacturer's recommendations and best commercial practices; and

(2) All inspections and maintenance are documented and that these records are maintained for 3 years.

(b) For equipment which must be inspected and maintained under this section the Coast Guard may—

(1) Verify that the equipment inventories exist as represented;

(2) Verify the existence of records required under this section;

(3) Verify that the records of inspection and maintenance reflect the actual condition of any equipment listed or referenced; and

(4) Inspect and require operational tests of equipment.

(c) This section does not apply to containment booms, skimmers, vessels, and other major equipment listed or referenced in the plan and ensured available through the written consent of an oil spill removal organization, as

described in the definition of ''contract or other approved means'' at § 155.1020.

§ 155.1065 Procedures for plan submission, approval, requests for acceptance of alternative planning criteria, and appeal.

(a) An owner or operator of a vessel to which this subpart applies shall submit one complete English language copy of a vessel response plan to Commandant electronically by using the Vessel Response Plan Electronic Submission Tool available at *http://evrp.uscg.mil* or by mail to Commandant (CG–5431), Coast Guard, 2100 2nd St., SW., Stop 7581, Washington, DC 20593–7581 or *vrp@uscg.mil*. The plan must be submitted at least 60 days before the vessel intends to handle, store, transport, transfer, or lighter oil in areas subject to the jurisdiction of the United States.

(b) The owner or operator shall include a statement certifying that the plan meets the applicable requirements of subparts D, E, F, G, and J of this part and shall include a statement indicating whether the vessel(s) covered by the plan are manned vessels carrying oil as a primary cargo, unmanned vessels carrying oil as a primary cargo, or vessels carrying oil as a secondary cargo. For plans submitted in paper format, CG Form ''Application for Approval/Revision of Vessel Pollution Response Plans'' (CG–6083) located at: *http://www.uscg.mil/forms/CG/CG_6083.pdf* meets the requirement for a vessel response plan certification statement as required by this paragraph.

(c) If the Coast Guard determines that the plan meets all requirements of this subpart, the Coast Guard will notify the vessel owner or operator with an approval letter. The plan will be valid for a period of up to 5 years from the date of approval.

(d) If the Coast Guard reviews the plan and determines that it does not meet all of the requirements, the Coast Guard will notify the vessel owner or operator of the response plan's deficiencies. The vessel owner or operator must then resubmit the revised plan, or corrected portions of the plan, within the time period specified in the written notice provided by the Coast Guard.

(e) For those vessels temporarily authorized under § 155.1025 to operate without an approved plan pending formal Coast Guard approval, the deficiency provisions of § 155.1070(c), (d), and (e) will also apply.

(f) When the owner or operator of a vessel believes that national planning criteria contained elsewhere in this part are inappropriate to the vessel for the areas in which it is intended to operate, the owner or operator may request acceptance of alternative planning criteria by the Coast Guard. Submission of a request must be made 90 days before the vessel intends to operate under the proposed alternative and must be forwarded to the COTP for the geographic area(s) affected.

(g) An owner or operator of a United States flag vessel may meet the response plan requirements of Regulation 37 of MARPOL 73/78 and subparts D, E, F, and G of this part by stating in writing, according to the provisions of § 155.1030(j), that the plan submitted is intended to address the requirements of both Regulation 37 of MARPOL 73/78 and the requirements of subparts D, E, F, and G of this part.

(h) Within 21 days of notification that a plan is not approved, the vessel owner or operator may appeal that determination to the Prevention Policy Directorate for Marine Safety, Security, and Stewardship (CG–54). This appeal must be submitted in writing to Commandant (CG–54), Coast Guard, 2100 2nd St., SW., Stop 7581, Washington, DC 20593–7581.

[CGD 91–034, 61 FR 1081, Jan. 12, 1996, as amended by CGD 96–026, 61 FR 33666, June 28, 1996; CGD 97–023, 62 FR 33364, June 19, 1997; USCG–2002–12471, 67 FR 41333, June 18, 2002; USCG–2008–0179, 73 FR 35015, June 19, 2008; USCG–2010–0351, 75 FR 36285, June 25, 2010; USCG–2008–1070, 78 FR 60123, Sept. 30, 2013]

§ 155.1070 Procedures for plan review, revision, amendment, and appeal.

(a) A vessel response plan must be reviewed annually by the owner or operator.

(1) This review must occur within 1 month of the anniversary date of Coast Guard approval of the plan.

(2) The owner or operator shall submit any plan amendments to the Coast Guard for information or approval. Revisions to a plan must include a cover page that provides a summary of the changes being made and the pages being affected. Revised pages must further include the number of the revision and date of that revision. Although plans should be submitted electronically, for plans submitted in paper format, CG Form ''Application for Approval/Revision of Vessel Pollution Response Plans'' (CG–6083) located at: *http://www.uscg.mil/forms/CG/CG_6083.pdf* should be used in lieu of a cover letter to request the required resubmission, plan amendment, or revision and to document the annual review required by this paragraph (a).

(3) Any required changes must be entered in the plan and noted on the record of changes page. The completion of the annual review must also be noted on the record of changes page.

(b) The vessel owner or operator subject to subparts D, E, F, G, or J of this part must resubmit the entire plan to the Coast Guard for approval—

(1) Six months before the end of the Coast Guard approval period identified in § 155.1065(c) or § 155.5065(c); and

(2) Whenever there is a change in the vessel owner or operator, if the previous vessel owner or operator provided the certifying statement required by § 155.1065(b) or § 155.5065(b), then the new vessel owner or operator must submit a new statement certifying that the plan continues to meet the applicable requirements of subparts D, E, F, G, or J of this part.

(c) Revisions or amendments to an approved response plan must be submitted for approval by the vessel's owner or operator whenever there is—

(1) A change in the vessel owner or operator, if that vessel owner or operator is not the one who provided the certifying statement required by § 155.1065(b) or § 155.5065(b);

(2) A change in the vessel's operating area that includes ports or geographic area(s) not covered by the previously approved plan. A vessel may operate in an area not covered in a previously approved plan upon receipt of written acknowledgment by the Coast Guard that a new geographic-specific appendix has been submitted for approval by the vessel's owner or operator and the certification required in § 155.1025(c)(2) or § 155.5023(b) has been provided;

(3) A significant change in the vessel's configuration that affects the information included in the response plan;

(4) A change in the type of oil carried onboard (oil group) that affects the required response resources, except as authorized by the COTP for purposes of assisting in an oil spill response activity;

(5) A change in the identification of the oil spill removal organization(s) or other response-related resource required by § 155.1050, § 155.1052, § 155.1230, § 155.2230, § 155.5050, or § 155.5052 as appropriate, except an oil spill removal organization required by § 155.1050(d) or § 155.5050(d) that may be changed on a case-by-case basis for an oil spill removal organization previously classified by the Coast Guard, which has been ensured to be available by contract or other approved means;

(6) A significant change in the vessel's emergency response procedures;

(7) A change in the qualified individual;

(8) The addition of a vessel to the plan. This change must include the vessel-specific appendix required by this subpart and the vessel owner or operator's certification required in § 155.1025(c) or § 155.5023(b); or

(9) Any other significant changes that affect the implementation of the plan.

(d) Thirty days in advance of operation, the vessel owner or operator must submit any revision or amendments identified in paragraph (c) of this section. The certification required in § 155.1065(b) or § 155.5065(b) must be submitted along with the revisions or amendments.

(e) The Coast Guard may require a vessel owner or operator to revise a response plan at any time if it is determined that the response plan does not meet the requirements of this subpart. The Coast Guard will notify the vessel owner or operator in writing of any deficiencies and any operating restrictions. Deficiencies must be corrected and submitted for acceptance within the time period specified in the written

notice provided by the Coast Guard or the plan will be declared invalid and any further storage, transfer, handling, transporting or lightering of oil in areas subject to the jurisdiction of the United States will be in violation of section 311(j)(5)(E) of the Federal Water Pollution Control Act (FWPCA) (33 U.S.C. 1321(j)(5)(E)).

(f) A vessel owner or operator who disagrees with a deficiency determination may submit a petition for reconsideration to Office of Commercial Vessel Compliance (CG–CVC), Coast Guard Headquarters, 2100 2nd St., SW., Stop 7581, Washington, DC 20593–7581 or *vrp@uscg.mil* within the time period required for compliance or within 7 days from the date of receipt of the Coast Guard notice of a deficiency determination, whichever is less. After considering all relevant material presented, the Coast Guard will notify the vessel owner or operator of the final decision.

(1) Unless the vessel owner or operator petitions for reconsideration of the Coast Guard's decision, the vessel's owner or operator must correct the response plan deficiencies within the period specified in the Coast Guard's initial determination.

(2) If the vessel owner or operator petitions the Coast Guard for reconsideration, the effective date of the Coast Guard notice of deficiency determination may be delayed pending a decision by the Coast Guard. Petitions to the Coast Guard must be submitted in writing, via the Coast Guard official who issued the requirement to amend the response plan, within 5 days of receipt of the notice.

(g) Within 21 days of notification that a plan is not approved, the vessel owner or operator may appeal that determination to the Director of Inspections and Compliance (CG–5PC). This appeal must be submitted in writing to Commandant (CG–5PC), Director of Inspections and Compliance, U.S. Coast Guard, 2100 2nd St. SW Stop 7581, Washington, DC 20593–7581.

(h) Except as required in paragraph (c) of this section, amendments to personnel and telephone number lists included in the response plan do not require prior Coast Guard approval.

(i) The Coast Guard and all other holders of the response plan shall be advised of any revisions to personnel and telephone numbers and provided a copy of these revisions as they occur.

[CGD 91–034, 61 FR 1081, Jan. 12, 1996, as amended by CGD 96–026, 61 FR 33666, June 28, 1996; CGD 97–023, 62 FR 33364, June 19, 1997; USCG–2002–12471, 67 FR 41333, June 18, 2002; USCG–2008–0179, 73 FR 35015, June 19, 2008; USCG–2001–8661, 74 FR 45029, Aug. 31, 2009; USCG–2010–0351, 75 FR 36285, June 25, 2010; USCG–2008–1070, 78 FR 60123, Sept. 30, 2013]

Subpart E—Additional Response Plan Requirements for Tankers Loading Cargo at a Facility Permitted Under the Trans-Alaska Pipeline Authorization Act

SOURCE: CGD 91–034, 61 FR 1097, Jan. 12, 1996, unless otherwise noted.

§ 155.1110 Purpose and applicability.

(a) This subpart establishes oil spill response planning requirements for an owner or operator of a tanker loading cargo at a facility permitted under the Trans-Alaska Pipeline Authorization Act (TAPAA) (43 U.S.C. 1651 *et seq.*) in Prince William Sound, Alaska, in addition to the requirements of subpart D of this part. The requirements of this subpart are intended for use in developing response plans and identifying response resources during the planning process, they are not performance standards.

(b) The information required in this subpart must be included in a Prince William Sound geographic-specific appendix to the vessel response plan required by subpart D of this part.

§ 155.1115 Definitions.

Except as provided in this section, the definitions in § 155.1020 apply to this subpart.

Prince William Sound means all State and Federal waters within Prince William Sound, Alaska, including the approach to Hinchinbrook Entrance out to and encompassing Seal Rock.

§ 155.1120 Operating restrictions and interim operating authorization.

The owner or operator of a tanker to which this subpart applies may not load cargo at a facility permitted under the Trans-Alaska Pipeline Authorization Act unless the requirements of this subpart and § 155.1025 have been met. The owner or operator of such a tanker shall certify to the Coast Guard that they have provided, through an oil spill removal organization required by § 155.1125, the necessary response resources to remove, to the maximum extent practicable, a worst case discharge or a discharge of 200,000 barrels of oil, whichever is greater, in Prince William Sound, AK.

§ 155.1125 Additional response plan requirements.

(a) The owner or operator of a tanker subject to this subpart shall include the requirements of this section in the Prince William Sound geographic-specific appendix required by subpart D of this part.

(1) The response plan must include identification of an oil spill removal organization that shall—

(i) Perform response activities;

(ii) Provide oil spill removal and containment training, including training in the operation of prepositioned equipment, for personnel, including local residents and fishermen, from the following locations in Prince William Sound—

(A) Valdez;

(B) Tatitlek;

(C) Cordova;

(D) Whittier;

(E) Chenega; and

(F) Fish hatcheries located at Port San Juan, Main Bay, Esther Island, Cannery Creek, and Solomon Gulch.

(iii) Consist of sufficient numbers of trained personnel with the necessary technical skills to remove, to the maximum extent practicable, a worst case discharge or a discharge of 200,000 barrels of oil, whichever is greater;

(iv) Provide a plan for training sufficient numbers of additional personnel to remove, to the maximum extent practicable, a worst case discharge or a discharge of 200,000 barrels of oil, whichever is greater; and

(v) Address the responsibilities required in § 155.1035(d)(4).

(2) The response plan must include exercise procedures that must—

(i) Provide two exercises of the oil spill removal organization each year to ensure prepositioned equipment and trained personnel required under this subpart perform effectively;

(ii) Provide for both announced and unannounced exercises; and

(iii) Provide for exercises that test either the entire appendix or individual components.

(3) The response plan must identify a testing, inspection, and certification program for the prepositioned response equipment required in § 155.1130 that must provide for—

(i) Annual testing and equipment inspection in accordance with the manufacturer's recommended procedures, to include—

(A) Start-up and running under load of all electrical motors, pumps, power packs, air compressors, internal combustion engines, and oil recovery devices; and

(B) Removal of no less than one-third of required boom from storage annually, such that all boom will have been removed and examined within a period of 3 years;

(ii) Records of equipment tests and inspection; and

(iii) Use of an independent entity to certify that the equipment is on-site and in good operating condition and that required tests and inspections have been performed. The independent entity must have appropriate training and expertise to provide this certification.

(4) The response plan must identify and give the location of the prepositioned response equipment required in § 155.1130 including the make, model, and effective daily recovery rate of each oil recovery resource.

(b) The owner or operator shall submit to the COTP for approval, no later than September 30th of each calendar year, a schedule for the training and exercises required by the geographic-specific appendix for Prince William Sound for the following calendar year.

(c) All records required by this section must be available for inspection

by the Coast Guard and must be maintained for a period of 3 years.

§ 155.1130 Requirements for prepositioned response equipment.

The owner or operator of a tanker subject to this subpart shall provide the following prepositioned response equipment, located within Prince William Sound, in addition to that required by § 155.1035:

(a) On-water recovery equipment with a minimum effective daily recovery capacity of 30,000 barrels, capable of being on scene within 6 hours of notification of a discharge.

(b) On-water storage capacity of 100,000 barrels, capable of being on scene within 6 hours of notification of a discharge.

(c) Additional on-water recovery equipment with a minimum effective daily recovery capacity of 40,000 barrels capable of being on scene within 18 hours of notification of a discharge.

(d) On-water storage capacity of 300,000 barrels for recovered oily material, capable of being on scene within 24 hours of notification of a discharge.

(e) On-water oil recovery devices and storage equipment located in communities and at strategic locations.

(f) For sufficient protection of the environment in the locations identified in § 155.1125(a)(1)(ii)—

(1) Boom appropriate for the specific locations;

(2) Sufficient boats to deploy boom and sorbents;

(3) Sorbents including booms, sweeps, pads, blankets, drums and plastic bags;

(4) Personnel protective clothing and equipment;

(5) Survival equipment;

(6) First aid supplies;

(7) Buckets, shovels, and various other tools;

(8) Decontamination equipment;

(9) Shoreline cleanup equipment;

(10) Mooring equipment;

(11) Anchored buoys at appropriate locations to facilitate the positioning of defensive boom; and

(12) Other appropriate removal equipment for the protection of the environment as identified by the COTP.

(g) For each oil-laden tanker, an escorting response vessel which is fitted with skimming and on board storage capabilities practicable for the initial oil recovery planned for a cleanup operation, as identified by the oil spill removal organization.

(h) Lightering resources required in subpart I of this part capable of arriving on scene within 6 hours of notification of a discharge.

[CGD 91–034, 61 FR 1097, Jan. 12, 1996, as amended by USCG–2009–0416, 74 FR 27441, June 10, 2009]

§ 155.1135 Response plan development and evaluation criteria.

For tankers subject to this subpart, the following response times must be used in determining the on-scene arrival time in Prince William Sound, for the response resources required by § 155.1050:

	Tier 1	Tier 2	Tier 3
Prince William Sound.	12 hrs	24 hrs	36 hrs

§ 155.1145 Submission and approval procedures.

An appendix prepared under this subpart must be submitted and approved in accordance with § 155.1065.

§ 155.1150 Plan revision and amendment procedures.

An appendix prepared and submitted under this subpart must be revised and amended, as necessary, in accordance with § 155.1070.

Subpart F—Response plan requirements for vessels carrying animal fats and vegetable oils as a primary cargo

SOURCE: CGD 91–034, 61 FR 1098, Jan. 12, 1996, unless otherwise noted.

§ 155.1210 Purpose and applicability.

This subpart establishes oil spill response planning requirements for an owner or operator of a vessel carrying animal fats and vegetable oils as a primary cargo. The requirements of this subpart are intended for use in developing response plans and identifying response resources during the planning process. They are not performance standards.

§ 155.1225 Response plan submission requirements.

An owner or operator of a vessel carrying animal fats and vegetable oils as a primary cargo shall submit a response plan in accordance with the requirements of this subpart, and with all sections of subpart D of this part, except §§ 155.1050 and 155.1052.

§ 155.1230 Response plan development and evaluation criteria.

(a) Owners and operators of vessels that carry animal fats or vegetable oils as a primary cargo must provide information in their plan that identifies—

(1) Procedures and strategies for responding to a worst case discharge of animal fats or vegetable oils to the maximum extent practicable; and

(2) Sources of the equipment and supplies necessary to contain, recover, and mitigate such a discharge.

(b) An owner or operator of a vessel carrying animal fats or vegetable oils as a primary cargo must ensure that any equipment identified in a response plan is capable of operating in the conditions expected in the geographic area(s) in which the vessel operates using the criteria in Table 1 of Appendix B of this part. When evaluating the operability of equipment, the vessel owner or operator must consider limitations that are identified in the Area Contingency Plans for the COTP zones in which the vessel operates, including—

(1) Ice conditions;

(2) Debris;

(3) Temperature ranges; and

(4) Weather-related visibility.

(c) The owner or operator of a vessel carrying animal fats or vegetable oils as a primary cargo must identify in the response plan and ensure, through contract or other approved means, the availability of required equipment including—

(1) Containment boom, sorbent boom, or other methods for containing oil floating on the surface or to protect shorelines from impact;

(2) Oil recovery devices appropriate for the type of animal fats or vegetable oils carried; and

(3) Other appropriate equipment necessary to respond to a discharge involving the type of animal fats or vegetable oils carried.

(d) Response resources identified in a response plan under paragraph (c) of this section must be capable of arriving on-scene within the applicable Tier 1 response times specified in this paragraph. An oil spill removal organization may not be listed in the plan unless the organization has provided written consent to be listed in the plan as an available resource. Response times from the time of discovery of a discharge are as follows:

	Tier 1	Tier 2	Tier 3
Higher volume port area.	12 hrs	N/A	N/A
Great Lakes	18 hrs	N/A	N/A
All other rivers and canals, inland, nearshore, and offshore areaas.	24 hrs	N/A	N/A
Open ocean (plus travel time from shore).	24 hrs+	N/A	N/A

(e) The owner or operator of a vessel carrying animal fats or vegetable oils as a primary cargo must identify in the response plan and ensure the availability of the following resources through contract or other approved means:

(1) A salvage company with appropriate expertise and equipment.

(2) A company with vessel firefighting capability that will respond to casualties in the area(s) in which the vessel is operating.

(f) Vessel owners or operators must identify intended sources of the resources required under paragraph (e) of this section capable of being deployed to the areas in which the vessel will operate. A company may not be listed in the plan unless the company has provided written consent to be listed in the plan as an available resource. To meet this requirement in a response plan submitted for approval or reapproval on or after February 18, 1998, the vessel owner or operator must identify both the intended sources of this capability and demonstrate that the resources are capable of being deployed to the port nearest to the area where the vessel operates within 24 hours of discovery of a discharge.

(g) The owner or operator of a vessel carrying animal fats or vegetable oils

as a primary cargo must identify in the response plan, and ensure the availability of, through contract or other approved means, certain resources required by subpart D, § 155.1035(c)(5)(ii) and § 155.1040(c)(5)(i), as applicable.

(1) Resources must include—

(i) Fendering equipment;

(ii) Transfer hoses and connection equipment; and

(iii) Portable pumps and ancillary equipment necessary to offload the vessel's largest cargo tank in 24 hours of continuous operation.

(2) Resources must be capable of reaching the locations in which the vessel operates within the stated times following notification:

(i) Inland, nearshore, and Great Lakes waters—12 hours.

(ii) Offshore waters and rivers and canals—18 hours.

(iii) Open ocean waters—36 hours.

(3) For barges operating in rivers and canals as defined in this subpart, the requirements of this paragraph (g)(3) may be met by listing resources capable of being deployed in an area within the response times in paragraph (g)(2) of this section. A vessel owner or operator may not identify such resources in a plan unless the response organization has provided written consent to be identified in a plan as an available resource.

(h) The response plan for a vessel that is located in any environment with year-round preapproval for use of dispersants suitable for animal fats and vegetable oils and that handles, stores, or transports animal fats or vegetable oils may request a credit for up to 25 percent of the worst case planning volume set forth by subpart D of this part. To receive this credit, the vessel owner or operator must identify in the plan and ensure, by contract or other approved means, the availability of specified resources to apply the dispersants and to monitor their effectiveness. To extent of the credit will be based on the volumes of the dispersant available to sustain operations at the manufacturers' recommended dosage rates. Other spill mitigation techniques, including mechanical dispersal, may be identified in the response plan, provided they are in accordance with the NCP and the applicable ACP. Resources identified for plan credit should be capable of being on scene within 12 hours of a discovery of a discharge. Identification of these resources does not imply that they will be authorized for use. Actual authorization for use during the spill response will be governed by the provisions of the NCP and the applicable ACP.

Subpart G—Response Plan Requirements for Vessels Carrying Other Non-Petroleum Oils as a Primary Cargo

SOURCE: CGD 91–034, 61 FR 1099, Jan. 12, 1996, unless otherwise noted.

§ 155.2210 Purpose and applicability.

This subpart establishes oil spill response planning requirements for an owner or operator of a vessel carrying other non-petroleum oils as a primary cargo. The requirements of this subpart are intended for use in developing response plans and identifying response resources during the planning process. They are not performance standards.

§ 155.2225 Response plan submission requirements.

An owner or operator of a vessel carrying other non-petroleum oils as a primary cargo shall submit a response plan in accordance with the requirements of this subpart, and with all sections of subpart D of this part, except §§ 155.1050 and 155.1052.

§ 155.2230 Response plan development and evaluation criteria.

(a) Owners and operators of vessels that carry other non-petroleum oil as a primary cargo must provide information in their plan that identifies—

(1) Procedures and strategies for responding to a worst case discharge of other non-petroleum oils to the maximum extent practicable; and

(2) Sources of the equipment and supplies necessary to contain, recover, and mitigate such a discharge.

(b) An owner or operator of a vessel carrying other non-petroleum oil as a primary cargo must ensure that any equipment identified in a response plan is capable of operating in the conditions expected in the geographic

area(s) in which the vessel operates using the criteria in Table 1 of Appendix B of this part. When evaluating the operability of equipment, the vessel owner or operator must consider limitations that are identified in the Area Contingency Plans for the COTP zones in which the vessel operates, including—

(1) Ice conditions;

(2) Debris;

(3) Temperature ranges; and

(4) Weather-related visibility.

(c) The owner or operator of a vessel carrying other non-petroleum oil as a primary cargo must identify in the response plan and ensure, through contract or other approved means, the availability of required equipment including—

(1) Containment boom, sorbent boom, or other methods for containing oil floating on the surface or to protect shorelines from impact;

(2) Oil recovery devices appropriate for the type of other non-petroleum oil carried; and

(3) Other appropriate equipment necessary to respond to a discharge involving the type of other non-petroleum oil carried.

(d) Response resources identified in a response plan under paragraph (c) of this section must be capable of arriving on-scene within the applicable Tier 1 response times specified in this paragraph. An oil spill removal organization may not be listed in the plan unless the organization has provided written consent to be listed in the plan as an available resource. Response times from the time of discovery of a discharge are as follow:

	Tier 1	Tier 2	Tier 3
Higher volume port area.	12 hrs	N/A	N/A
Great Lakes	18 hrs	N/A	N/A
All other rivers and canals, inland, nearshore, and offshore areas.	24 hrs	N/A	N/A
Open ocean (plus travel time from shore).	24 hrs+	N/A	N/A

(e) The owner or operator of a vessel carrying other non-petroleum oil as a primary cargo must identify in the response plan and ensure the availability of the following resources through contract or other approved means:

(1) A salvage company with appropriate expertise and equipment.

(2) A company with vessel firefighting capability that will respond to casualties in the area(s) in which the vessel is operating.

(f) Vessel owners or operators must identify intended sources of the resources required under paragraph (e) of this section capable of being deployed to the areas in which the vessel will operate. A company may not be listed in the plan unless the company has provided written consent to be listed in the plan as an available resource. To meet this requirement in a response plan submitted for approval or reapproval on or after February 18, 1998, the vessel owner or operator must identify both the intended sources of this capability and demonstrate that the resources are capable of being deployed to the port nearest to the area where the vessel operates within 24 hours of discovery of a discharge.

(g) The owner or operator of a vessel carrying other non-petroleum oil as a primary cargo must identify in the response plan, and ensure the availability of, through contract or other approved means, certain resources required by subpart D of this part, § 155.1035(c)(5)(ii) and § 155.1040(c)(5)(i) of this part, as applicable.

(1) Resources must include—

(i) Fendering equipment;

(ii) Transfer hoses and connection equipment; and

(iii) Portable pumps and ancillary equipment necessary to offload the vessel's largest cargo tank in 24 hours of continuous operation.

(2) Resources must be capable of reaching the locations in which the vessel operates within the stated times following notification:

(i) Inland, nearshore, and Great Lakes waters—12 hours.

(ii) Offshore waters and rivers and canals—18 hours.

(iii) Open ocean waters—36 hours.

(3) For barges operating in rivers and canals as defined in this subpart, the requirements of this paragraph (g)(3) may be met by listing resources capable of being deployed in an area within the response times in paragraph (g)(2)

of this section. A vessel owner or operator may not identify such resources in a plan unless the response organization has provided written consent to be identified in a plan as an available resource.

(h) The response plan for a vessel that is located in any environment with year-round preapproval for use of dispersants and that handles, stores, or transports other non-petroleum oils may request a credit for up to 25 percent of the worst case planning volume set forth by subpart D of this part. To receive this credit, the vessel owner or operator must identify in the plan and ensure, by contract or other approved means, the availability of specified resources to apply the dispersants and to monitor their effectiveness. The extent of the credit will be based on the volumes of the dispersant available to sustain operations at the manufacturers' recommended dosage rates. Identification of these resources does not imply that they will be authorized for use. Actual authorization for use during a spill response will be governed by the provisions of the NCP and the applicable ACP.

Subpart H [Reserved]

Subpart I—Salvage and Marine Firefighting

SOURCE: USCG–1998–3417, 73 FR 80649, Dec. 31, 2008, unless otherwise noted.

§ 155.4010 Purpose of this subpart.

(a) The purpose of this subpart is to establish vessel response plan *salvage* and *marine firefighting* requirements for vessels, that are carrying group I–IV oils, and that are required by §§ 155.1015 and 155.5015 to have a vessel response plan.

(b) *Salvage* and *marine firefighting* actions can save lives and property, and prevent the escalation of potential oil spills to worst case discharge scenarios.

(c) A planholder must ensure by *contract or other approved means* that response resources are available to respond. However, the response criteria specified in the regulations (e.g., quantities of response resources and their arrival times) are planning criteria, not performance standards, and are based on assumptions that may not exist during an actual incident, as stated in 33 CFR 155.1010. Compliance with the regulations is based upon whether a covered response plan ensures that adequate response resources are available, not on whether the actual performance of those response resources after an incident meets specified arrival times or other planning criteria. Failure to meet specified criteria during an actual spill response does not necessarily mean that the planning requirements of the Federal Water Pollution Control Act (FWPCA) (33 U.S.C. 1251–1376) and regulations were not met. The Coast Guard will exercise its enforcement discretion in light of all facts and circumstances.

[USCG–1998–3417, 73 FR 80649, Dec. 31, 2008, as amended by USCG–2008–1070, 78 FR 60123, Sept. 30, 2013]

§ 155.4015 Vessel owners and operators who must follow this subpart.

You must follow this subpart if your vessel carries group I–IV oils, and is required by § 155.1015 or § 155.5015 to have a vessel response plan.

[USCG–1998–3417, 73 FR 80649, Dec. 31, 2008, as amended by USCG–2008–1070, 78 FR 60123, Sept. 30, 2013]

§ 155.4020 Complying with this subpart.

(a)(1) If you have an existing approved vessel response plan required by § 155.1015, you must have your vessel response plan updated and submitted to the Coast Guard by February 22, 2011.

(2) All new or existing vessels operating on the navigable waters of the United States or transferring oil in a port or place subject to the jurisdiction of the United States, that meet the applicability requirements of § 155.1015, that do not have an approved vessel response plan, must comply with § 155.1065.

(3) Your vessel may not conduct oil transport or transfer operations if—

(i) You have not submitted a plan to the Coast Guard in accordance with § 155.1065 prior to February 22, 2011;

(ii) The Coast Guard determines that the response resources referenced in

your plan do not meet the requirements of this subpart;

(iii) The contracts or agreements cited in your plan have lapsed or are otherwise no longer valid;

(iv) You are not operating in accordance with your plan; or

(v) The plan's approval has expired.

(b) If § 155.5015 requires that you have a vessel response plan, you must have your vessel response plan submitted to the Coast Guard by January 30, 2014.

[USCG–1998–3417, 73 FR 80649, Dec. 31, 2008, as amended by USCG–2001–8661, 74 FR 45029, Aug. 31, 2009; USCG–2008–1070, 78 FR 60123, Sept. 30, 2013]

§ 155.4025 Definitions.

For the purposes of this subpart, the following definitions apply:

Assessment of structural stability means completion of a vessel's stability and structural integrity assessment through the use of a salvage software program. The data used for the calculations would include information collected by the on-scene salvage professional. The assessment is intended to allow sound decisions to be made for subsequent salvage efforts. In addition, the assessment must be consistent with the conditions set forth in 33 CFR 155.240 and 155.245, as applicable.

Boundary lines are lines drawn following the general trend of the seaward, highwater shorelines and lines continuing the general trend of the seaward, highwater shorelines across entrances to small bays, inlets and rivers as defined in 46 CFR 7.5(c).

Captain of the Port (COTP) city means the city which is the geographical location of the COTP office. COTP city locations are listed in 33 CFR part 3.

Continental United States (CONUS) means the contiguous 48 States and the District of Columbia.

Contract or other approved means is any one of the following:

(1)(i) A written contractual agreement between a vessel owner or operator and resource provider. This agreement must expressly provide that the resource provider is capable of, and intends to commit to, meeting the plan requirements.

(ii) A written certification that the personnel, equipment, and capabilities required by this subpart are available and under the vessel owner or operator's direct control. If the planholder has personnel, equipment and capabilities under their direct control, they need not contract those items with a resource provider.

(iii) An alternative approved by the Coast Guard (Commandant, Director of Prevention Policy (CG–54)) and submitted in accordance with 33 CFR 155.1065(f) and 155.5067(a).

(2) As part of the contract or other approved means you must develop and sign, with your resource provider, a written funding agreement. This funding agreement is to ensure that salvage and marine firefighting responses are not delayed due to funding negotiations. The funding agreement must include a statement of how long the agreement remains in effect, and must be provided to the Coast Guard for VRP approval. In addition any written agreement with a public resource provider must be included in the planholder's Vessel Response Plan (VRP).

Diving services support means divers and their equipment to support salvage operations. This support may include, but not be limited to, underwater repairs, welding, placing lifting slings, or performing damage assessments.

Emergency lightering is the process of transferring oil between two ships or other floating or land-based receptacles in an emergency situation and may require pumping equipment, transfer hoses, fenders, portable barges, shore based portable tanks, or other equipment that circumstances may dictate.

Emergency towing, also referred to as rescue towing, means the use of towing vessels that can pull, push or make-up alongside a vessel. This is to ensure that a vessel can be stabilized, controlled or removed from a grounded position. Towing vessels must have the proper horsepower or bollard pull compatible with the size and tonnage of the vessel to be assisted.

External emergency transfer operations means the use of external pumping equipment placed on board a vessel to move oil from one tank to another, when the vessel's own transfer equipment is not working.

External firefighting teams means trained firefighting personnel, aside from the crew, with the capability of boarding and combating a fire on a vessel.

External vessel firefighting systems mean firefighting resources (personnel and equipment) that are capable of combating a fire from other than on board the vessel. These resources include, but are not limited to, fire tugs, portable fire pumps, airplanes, helicopters, or shore side fire trucks.

Funding agreement is a written agreement between a resource provider and a planholder that identifies agreed upon rates for specific equipment and services to be made available by the resource provider under the agreement. The funding agreement is to ensure that salvage and marine firefighting responses are not delayed due to funding negotiations. This agreement must be part of the contract or other approved means and must be submitted for review along with the VRP.

Great Lakes means Lakes Superior, Michigan, Huron, Erie, and Ontario, their connecting and tributary waters, the Saint Lawrence River as far as Saint Regis, and adjacent port areas.

Heavy lift means the use of a salvage crane, A-frames, hydraulic jacks, winches, or other equipment for lifting, righting, or stabilizing a vessel.

Inland area means the area shoreward of the boundary lines defined in 46 CFR part 7, except that in the Gulf of Mexico, it means the area shoreward of the lines of demarcation (COLREG lines) as defined in §§ 80.740 through 80.850 of this chapter. The inland area does not include the Great Lakes.

Making temporary repairs means action to temporarily repair a vessel to enable it to safely move to a shipyard or other location for permanent repairs. These services include, but are not limited to, shoring, patching, drill stopping, or structural reinforcement.

Marine firefighting means any firefighting related act undertaken to assist a vessel with a potential or actual fire, to prevent loss of life, damage or destruction of the vessel, or damage to the marine environment.

Marine firefighting pre-fire plan means a plan that outlines the responsibilities and actions during a marine fire incident. The principle purpose is to explain the resource provider's role, and the support which can be provided, during marine firefighting incidents. Policies, responsibilities and procedures for coordination of on-scene forces are provided in the plan. It should be designed for use in conjunction with other state, regional and local contingency and resource mobilization plans.

Nearshore area means the area extending seaward 12 miles from the boundary lines defined in 46 CFR part 7, except in the Gulf of Mexico. In the Gulf of Mexico, a nearshore area is one extending seaward 12 miles from the line of demarcation (COLREG lines) as defined in §§ 80.740 through 80.850 of this chapter.

Offshore area means the area up to 38 nautical miles seaward of the outer boundary of the nearshore area.

On-site fire assessment means that a marine firefighting professional is on scene, at a safe distance from the vessel or on the vessel, who can determine the steps needed to control and extinguish a marine fire in accordance with a vessel's stability and structural integrity assessment if necessary.

On-site salvage assessment means that a salvage professional is on scene, at a safe distance from the vessel or on the vessel, who has the ability to assess the vessel's stability and structural integrity. The data collected during this assessment will be used in the salvage software calculations and to determine necessary steps to salve the vessel.

Other refloating methods means those techniques for refloating a vessel aside from using pumps. These services include, but are not limited to, the use of pontoons, air bags or compressed air.

Outside continental United States (OCONUS) means Alaska, Hawaii, the Commonwealth of Puerto Rico, Guam, American Samoa, the United States Virgin Islands, the Commonwealth of the Northern Marianas, and any other territory or possession of the United States.

Primary resource provider means a resource provider listed in the vessel response plan as the principal entity contracted for providing specific salvage and/or marine firefighting services and resources, when multiple resource providers are listed for that service, for

each of the COTP zones in which a vessel operates. The primary resource provider will be the point of contact for the planholder, the Federal On Scene Coordinator (FOSC) and the Unified Command, in matters related to specific resources and services, as required in § 155.4030(a).

Remote assessment and consultation means contacting the salvage and/or marine firefighting resource providers, by phone or other means of communications to discuss and assess the situation. The person contacted must be competent to consult on a determination of the appropriate course of action and initiation of a response plan.

Resource provider means an entity that provides personnel, equipment, supplies, and other capabilities necessary to perform salvage and/or marine firefighting services identified in the response plan, and has been arranged by contract or other approved means. The resource provider must be selected in accordance with § 155.4050. For marine firefighting services, resource providers can include public firefighting resources as long as they are able, in accordance with the requirements of § 155.4045(d), and willing to provide the services needed.

Salvage means any act undertaken to assist a vessel in potential or actual danger, to prevent loss of life, damage or destruction of the vessel and release of its contents into the marine environment.

Salvage plan means a plan developed to guide salvage operations except those identified as specialized salvage operations.

Special salvage operations plan means a salvage plan developed to carry out a specialized salvage operation, including heavy lift and/or subsurface product removal.

Subsurface product removal means the safe removal of oil from a vessel that has sunk or is partially submerged underwater. These actions can include pumping or other means to transfer the oil to a storage device.

Underwater vessel and bottom survey means having salvage resources on scene that can perform examination and analysis of the vessel's hull and equipment below the water surface. These resources also include the ability to determine the bottom configuration and type for the body of water. This service can be accomplished through the use of equipment such as sonar, magnetometers, remotely operated vehicles or divers. When divers are used to perform these services, the time requirements for this service apply and not those of diving services support.

[USCG–1998–3417, 73 FR 80649, Dec. 31, 2008, as amended by USCG–2008–1070, 78 FR 60124, Sept. 30, 2013]

§ 155.4030 Required salvage and marine firefighting services to list in response plans.

(a) You must identify, in the geographical-specific appendices of your VRP, the *salvage* and *marine firefighting* services listed in Table 155.4030(b)—Salvage and Marine Firefighting Services and Response Timeframes. Additionally, you must list those *resource providers* that you have contracted to provide these services. You may list multiple *resource providers* for each service, but you must identify which one is your primary *resource provider* for each Captain of the Port (COTP) zone in which you operate. A method of contact, consistent with the requirements in §§ 155.1035(e)(6)(ii), 155.1040(e)(5)(ii), and 155.5035(e)(6)(ii) must also be listed, in the geographical-specific appendices of your VRP, adjacent to the name of the *resource provider*.

(b) Table 155.4030(b) lists the required *salvage* and *marine firefighting* services and response timeframes.

TABLE 155.4030(b)—SALVAGE AND MARINE FIREFIGHTING SERVICES AND RESPONSE TIMEFRAMES

Service	Location of incident response activity timeframe	
(1) Salvage	CONUS: nearshore area; inland waters; Great Lakes; and OCONUS: <or = 12 miles from COTP city (hours)	CONUS: offshore area; and OCONUS: <or = 50 miles from COTP city (hours)

TABLE 155.4030(b)—SALVAGE AND MARINE FIREFIGHTING SERVICES AND RESPONSE TIMEFRAMES—Continued

(i) *Assessment & Survey:*			
(A) Remote assessment and consultation		1	1
(B) Begin assessment of structural stability		3	3
(C) On-site salvage assessment		6	12
(D) Assessment of structural stability		12	18
(E) Hull and bottom survey		12	18
(ii) *Stabilization:*			
(A) Emergency towing		12	18
(B) Salvage plan		16	22
(C) External emergency transfer operations		18	24
(D) Emergency lightering		18	24
(E) Other refloating methods		18	24
(F) Making temporary repairs		18	24
(G) Diving services support		18	24
(iii) *Specialized Salvage Operations:*			
(A) Special salvage operations plan		18	24
(B) Subsurface product removal		72	84
(C) Heavy lift [1]		Estimated	Estimated
(2) Marine firefighting	At pier (hours)	CONUS: Nearshore area; inland waters; Great Lakes; and OCONUS: <or = 12 miles from COTP city (hours)	CONUS: Offshore area; and OCONUS: <or = 50 miles from COTP city (hours)
(i) *Assessment & Planning:*			
(A) Remote assessment and consultation	1	1	1
(B) On-site fire assessment	2	6	12
(ii) *Fire Suppression:*			
(A) External firefighting teams	4	8	12
(B) External vessel firefighting systems	4	12	18

[1] Heavy lift services are not required to have definite hours for a response time. The planholder must still contract for heavy lift services, provide a description of the heavy lift response and an estimated response time when these services are required, however, none of the timeframes listed in the table in § 155.4030(b) will apply to these services.

(c) *Integration into the response organization*. You must ensure that all *salvage* and *marine firefighting resource providers* are integrated into the response organizations listed in your plans. The response organization must be consistent with the requirements set forth in §§ 155.1035(d), 155.1040(d), 155.1045(d), and 155.5035(d).

(d) *Coordination with other response resource providers, response organizations and OSROs*. Your plan must include provisions on how the salvage and marine firefighting resource providers will coordinate with other response resources, response organizations, and OSROs. For example, you will need to identify how salvage and marine firefighting assessment personnel will coordinate response activity with oil spill removal organizations. For services that, by law, require public assistance, there must be clear guidelines on how service providers will interact with those organizations. The information contained in the response plan must be consistent with applicable Area Contingency Plans (ACPs) and the National Oil and Hazardous Substances Pollution Contingency Plan as found in §§ 155.1030(h) and 155.5030(f).

(e) *Ensuring the proper emergency towing vessels are listed in your VRP*. Your VRP must identify towing vessels with the proper characteristics, horsepower, and bollard pull to tow your vessel(s). These towing vessels must be capable of operating in environments where the winds are up to 40 knots.

(f) *Ensuring the proper type and amount of transfer equipment is listed in your VRP*. Your salvage resource provider must be able to bring on scene a pumping capability that can offload the vessel's largest cargo or fuel tank, whichever is greater, in 24 hours of continuous operation. This is required for both emergency transfer and lightering operations.

(g) *Ensuring firefighting equipment is compatible with your vessel*. Your plan must list the proper type and amount of extinguishing agent needed to combat an oil fire involving your vessel's

cargo fuel, other contents, and superstructure. If your primary extinguishing agent is foam or water, you must identify resources in your plan that are able to pump, for a minimum of 20 minutes, at least 0.016 gallons per minute per square foot of the deck area of your vessel, or an appropriate rate for spaces that this rate is not suitable for and if needed, an adequate source of foam. These resources described are to be supplied by the resource provider, external to the vessel's own firefighting system.

(h) *Ensuring the proper subsurface product removal.* You must have subsurface product removal capability if your vessel(s) operates in waters of 40 feet or more. Your resource provider must have the capability of removing bulk liquid cargo and fuel from your sunken vessel to a depth equal to the maximum your vessel operates in up to 150 feet.

[USCG–1998–3417, 73 FR 80649, Dec. 31, 2008; 74 FR 7648, Feb. 19, 2009; USCG–2010–0351, 75 FR 36285, June 25, 2010; USCG–2008–1070, 78 FR 60124, Sept. 30, 2013]

§ 155.4032 Other resource provider considerations.

(a) *Use of resource providers not listed in the VRP.* If another resource provider, not listed in the approved plan for the specific service required, is to be contracted for a specific response, justification for the selection of that resource provider needs to be provided to, and approved by, the FOSC. Only under exceptional circumstances will the FOSC authorize deviation from the resource provider listed in the approved vessel response plan in instances where that would best affect a more successful response.

(b) *Worker health and safety.* Your resource providers must have the capability to implement the necessary engineering, administrative, and personal protective equipment controls to safeguard their workers when providing salvage and marine firefighting services, as found in 33 CFR 155.1055(e) and 29 CFR 1910.120(q).

§ 155.4035 Required pre-incident information and arrangements for the salvage and marine firefighting resource providers listed in response plans.

(a) You must provide the information listed in §§155.1035(c), 155.1040(c), and 155.5035(c) to your salvage and marine firefighting resource providers.

(b) *Marine firefighting pre-fire plan.* (1) You must prepare a vessel pre-fire plan in accordance with NFPA 1405, Guide for Land-Based Firefighters Who Respond to Marine Vessel Fires, Chapter 9 (Incorporation by reference, *see* §155.140). If the planholder's vessel prefire plan is one that meets another regulation, such as SOLAS Chapter II–2, Regulation 15, or international standard, a copy of that specific fire plan must also be given to the resource provider(s) instead of the NFPA 1405 prefire plan, and be attached to the VRP.

(2) The marine firefighting resource provider(s) you are required to identify in your plan must be given a copy of the plan. Additionally, they must certify in writing to you that they find the plan acceptable and agree to implement it to mitigate a potential or actual fire.

(3) If a marine firefighting resource provider subcontracts to other organizations, each subcontracted organization must also receive a copy of the vessel pre-fire plan.

[USCG–1998–3417, 73 FR 80649, Dec. 31, 2008, as amended by USCG–2010–0351, 75 FR 36285, June 25, 2010; USCG–2008–1070, 78 FR 60124, Sept. 30, 2013]

§ 155.4040 Response times for each salvage and marine firefighting service.

(a) You must ensure, by contract or other approved means, that your resource provider(s) is capable of providing the services within the required timeframes.

(1) If your vessel is at the pier or transiting a COTP zone within the continental United States (CONUS), the timeframes in Table 155.4030(b) apply as listed.

(2) If your vessel is at the pier or transiting a COTP zone outside the continental United States (OCONUS), the timeframes in Table 155.4030(b) apply as follows:

(i) Inland waters and nearshore area timeframes apply from the COTP city out to and including the 12 mile point.

(ii) Offshore area timeframes apply from 12 to 50 miles outside the COTP city.

(3) If your vessel transits within an OCONUS COTP zone that is outside the areas described in paragraph (a)(2) of this section, but within the inland waters or the nearshore or offshore area, you must submit in writing, in your plan, the steps you will take to address salvage and marine firefighting needs in the event these services are required.

(b) The timeframe starts when anyone in your response organization receives notification of a potential or actual incident. It ends when the service reaches the ship, the outer limit of the nearshore area, the outer limit of the offshore area, the 12 or 50-mile point from the COTP city, or a point identified in your response plan for areas OCONUS.

(c) Table 155.4040(c) provides additional amplifying information for vessels transiting within the nearshore and offshore areas of CONUS or within 50 miles of an OCONUS COTP city.

TABLE 155.4040(c)—RESPONSE TIMEFRAME END POINTS

Service	Response timeframe ends when
(1) Salvage:	
(i) Remote assessment and consultation.	Salvor is in voice contact with Qualified Individual (QI)/Master/Operator.
(ii) Begin assessment of structural stability.	A structural assessment of the vessel has been initiated.
(iii) On-site salvage assessment ..	Salvor on board vessel.
(iv) Assessment of structural stability.	Initial analysis is completed. This is a continual process, but at the time specified an analysis needs to be completed.
(v) Hull and bottom survey	Survey completed.
(vi) Emergency towing	Towing vessel on scene.
vii) Salvage plan	Plan completed and submitted to Incident Commander/Unified Command.
(viii) External emergency transfer operations.	External pumps on board vessel.
(ix) Emergency lightering	Lightering equipment on scene and alongside.
(x) Other refloating methods	Salvage plan approved & resources on vessel.
(xi) Making temporary repairs	Repair equipment on board vessel.
(xii) Diving services support	Required support equipment & personnel on scene.
(xiii) Special salvage operations plan.	Plan completed and submitted to Incident Commander/Unified Command.
(xiv) Subsurface product removal	Resources on scene.
(xv) Heavy lift [1]	Estimated.
(2) Marine Firefighting:	
(i) Remote assessment and consultation.	Firefighter in voice contact with QI/Master/Operator.
(ii) On-site fire assessment	Firefighter representative on site.
(iii) External firefighting teams	Team and equipment on scene.
(iv) External vessel firefighting systems.	Personnel and equipment on scene.

[1] Heavy lift services are not required to have definite hours for a response time. The planholder must still contract for heavy lift services, provide a description of the heavy lift response and an estimated response time when these services are required, however, none of the timeframes listed in the table in § 155.4030(b) will apply to these services.

(d) *How to apply the timeframes to your particular situation.* To apply the timeframes to your vessel's situation, follow these procedures:

(1) Identify if your vessel operates CONUS or OCONUS.

(2) If your vessel is calling at any CONUS pier or an OCONUS pier within 50 miles of a COTP city, you must list the pier location by facility name or city and ensure that the marine firefighting resource provider can reach the locations within the specified response times in Table 155.4030(b).

(3) If your vessel is transiting within CONUS inland waters, nearshore or offshore areas or the Great Lakes, you must ensure the listed salvage and marine firefighting services are capable of reaching your vessel within the appropriate response times listed in Table 155.4030(b).

(4) If your vessel is transiting within 12 miles or less from an OCONUS COTP

city, you must ensure the listed salvage and marine firefighting services are capable of reaching a point 12 miles from the harbor of the COTP city within the nearshore area response times listed in Table 155.4030(b).

(5) If your vessel is transiting between 12 and 50 miles from an OCONUS COTP city, you must ensure the listed salvage and marine firefighting services are capable of reaching a point 50 miles from the harbor of the COTP city within the offshore area response times listed in Table 155.4030(b).

(6) If your vessel transits inland waters or the nearshore or offshore areas OCONUS, but is more than 50 miles from a COTP city, you must still contract for salvage and marine firefighting services and provide a description of how you intend to respond and an estimated response time when these services are required, however, none of the time limits listed in Table 155.4030(b) will apply to these services.

§ 155.4045 Required agreements or contracts with the salvage and marine firefighting resource providers.

(a) You may only list resource providers in your plan that have been arranged by contract or other approved means.

(b) You must obtain written consent from the resource provider stating that they agree to be listed in your plan. This consent must state that the resource provider agrees to provide the services that are listed in §§ 155.4030(a) through 155.4030(h), and that these services are capable of arriving within the response times listed in Table 155.4030(b). This consent may be included in the contract with the resource provider or in a separate document.

(c) This written consent must be available to the Coast Guard for inspection. The response plan must identify the location of this written consent, which must be:

(1) On board the vessel; or

(2) With a qualified individual located in the United States.

(d) Public marine firefighters may only be listed out to the maximum extent of the public resource's jurisdiction, unless other agreements are in place. A public marine firefighting resource may agree to respond beyond their jurisdictional limits, but the Coast Guard considers it unreasonable to expect public marine firefighting resources to do this.

§ 155.4050 Ensuring that the salvors and marine firefighters are adequate.

(a) You are responsible for determining the adequacy of the resource providers you intend to include in your plan.

(b) When determining adequacy of the resource provider, you must select a resource provider that meets the following selection criteria to the maximum extent possible:

(1) *Resource provider* is currently working in response service needed.

(2) *Resource provider* has documented history of participation in successful salvage and/or marine firefighting operations, including equipment deployment.

(3) *Resource provider* owns or has contracts for equipment needed to perform response services.

(4) *Resource provider* has personnel with documented training certification and degree experience (Naval Architecture, Fire Science, etc.).

(5) *Resource provider* has 24-hour availability of personnel and equipment, and history of response times compatible with the time requirements in the regulation.

(6) *Resource provider* has on-going continuous training program. For marine firefighting providers, they meet the training guidelines in NFPA 1001, 1005, 1021, 1405, and 1561 (Incorporation by reference, see § 155.140), show equivalent training, or demonstrate qualification through experience.

(7) *Resource provider* has successful record of participation in drills and exercises.

(8) *Resource provider* has salvage or marine firefighting plans used and approved during real incidents.

(9) *Resource provider* has membership in relevant national and/or international organizations.

(10) *Resource provider* has insurance that covers the salvage and/or marine firefighting services which they intend to provide.

(11) *Resource provider* has sufficient up front capital to support an operation.

(12) *Resource provider* has equipment and experience to work in the specific regional geographic environment(s) that the vessel operates in (e.g., bottom type, water turbidity, water depth, sea state and temperature extremes).

(13) *Resource provider* has the logistical and transportation support capability required to sustain operations for extended periods of time in arduous sea states and conditions.

(14) *Resource provider* has the capability to implement the necessary engineering, administrative, and personal protective equipment controls to safeguard the health and safety of their workers when providing salvage and marine firefighting services.

(15) *Resource provider* has familiarity with the salvage and marine firefighting protocol contained in the local ACPs for each COTP area for which they are contracted.

(c) A *resource provider* need not meet all of the selection criteria in order for you to choose them as a provider. They must, however, be selected on the basis of meeting the criteria to the maximum extent possible.

(d) You must certify in your plan that these factors were considered when you chose your resource provider.

§ 155.4052 Drills and exercises.

(a) A vessel owner or operator required by §§ 155.1035, 155.1040, 155.5035 to have a response plan shall conduct exercises as necessary to ensure that the plan will function in an emergency. Both announced and unannounced exercises must be included.

(b) The following are the minimum exercise requirements for vessels covered by this subpart:

(1) Remote assessment and consultation exercises, which must be conducted quarterly;

(2) Emergency procedures exercises, which must be conducted quarterly;

(3) Shore-based salvage and shore-based marine firefighting management team tabletop exercises, which must be conducted annually;

(4) Response provider equipment deployment exercises, which must be conducted annually;

(5) An exercise of the entire response plan, which must be conducted every three years. The vessel owner or operator shall design the exercise program so that all components of the response plan are exercised at least once every three years. All of the components do not have to be exercised at one time; they may be exercised over the 3-year period through the required exercises or through an area exercise; and

(6) Annually, at least one of the exercises listed in § 155.4052(b)(2) and (4) must be unannounced. An unannounced exercise is one in which the personnel participating in the exercise have not been advised in advance of the exact date, time, or scenario of the exercise.

(7) Compliance with the National Preparedness for Response Exercise Program (PREP) Guidelines will satisfy the vessel response plan exercise requirements. These guidelines are available on the Internet at *https://Homeport.uscg.mil/exercises*. Once on that Web site, select the link for ''Preparedness for Response Exercise Program (PREP)'' and then select ''Preparedness for Response Exercise Program (PREP) Guidelines''. Compliance with an alternate program that meets the requirements of 33 CFR 155.1060(a) and 155.5061, and has been approved under 33 CFR 155.1065 and 155.5065 will also satisfy the vessel response plan exercise requirements.

[USCG–1998–3417, 73 FR 80649, Dec. 31, 2008, as amended by USCG–2008–1070, 78 FR 60124, Sept. 30, 2013]

§ 155.4055 Temporary waivers from meeting one or more of the specified response times.

(a) You may submit a request for a temporary waiver of a specific response time requirement, if you are unable to identify a resource provider who can meet the response time.

(b) Your request must be specific as to the COTP zone, operating environment, salvage or marine firefighting service, and response time.

(c) Emergency lightering requirements set forth in § 155.4030(b) will not be subject to the waiver provisions of this subpart.

(d) You must submit your request to the Commandant, Director of Prevention Policy (CG–54), via the local COTP

for final approval. The local COTP will evaluate and comment on the waiver before forwarding the waiver request, via the District to the Commandant (CG–54) for final approval.

(e) Your request must include the reason why you are unable to meet the time requirements. It must also include how you intend to correct the shortfall, the time it will take to do so, and what arrangements have been made to provide the required response resources and their estimated response times.

(f) Commandant, Director of Prevention Policy (CG–54), will only approve waiver requests up to a specified time period, depending on the service addressed in the waiver request, the operating environment, and other relevant factors. These time periods are listed in Table 155.4055(g).

(g) Table 155.4055(g) lists the service waiver time periods.

TABLE 155.4055(g)—SERVICE WAIVER TIME PERIODS

Service	Maximum waiver time period (years)
(1) Remote salvage assessment & consultation	0
(2) Remote firefighting assessment & consultation	0
(3) On-site salvage & firefighting assessment	1
(4) Hull and bottom survey	2
(5) Salvage stabilization services	3
(6) Fire suppression services	4
(7) Specialized salvage operations	5

(h) You must submit your waiver request 30 days prior to any plan submission deadlines identified in this or any other subpart of part 155 in order for your vessel to continue oil transport or transfer operations.

Subpart J—Nontank Vessel Response Plans

SOURCE: USCG–2013–0070, 78 FR 60124, Sept. 30, 2013, unless otherwise noted.

§ 155.5010 Purpose.

The purpose of this subpart is to establish requirements for oil spill response plans for nontank vessels. The planning criteria in this subpart are intended for use in nontank vessel oil spill response plan development and the identification of resources necessary to respond to a nontank vessel's worst case discharge or substantial threat of such a discharge. The development of a nontank vessel response plan prepares the vessel's crew and ship management to respond to an oil spill. The specific criteria for response resources and their arrival times are not performance standards. They are planning criteria based upon a set of assumptions that may not exist during an actual oil spill incident. Note to § 155.5010: For nontank vessels that are mobile offshore drilling units (MODUs), additional oil spill planning standards are found in 30 CFR part 254.

§ 155.5012 Deviation from response plan.

The owner or operator of a nontank vessel required to have a vessel response plan (VRP) under this subpart may not deviate from the approved VRP unless the President or Federal On-Scene Coordinator determines that the deviation from the VRP would provide for a more expeditious or effective response to the spill or mitigation of its environmental effects.

§ 155.5015 Applicability.

(a) Except as provided in paragraph (d) of this section, this subpart applies to each self-propelled vessel that—

(1) Carries oil of any kind as fuel for main propulsion;

(2) Is not a tank vessel or is not certificated as a tank vessel;

(3) Operates upon the navigable waters of the United States, as defined in 46 U.S.C. 2101(17a); and

(4) Is 400 gross tons or more as measured under the convention measurement system in 46 U.S.C. 14302 or the regulatory measurement system of 46 U.S.C. 14502 for vessels not measured under 46 U.S.C. 14302.

(b) This subpart also applies to vessels carrying oil as secondary cargo and that meet the requirements of paragraph (a) of this section.

(c) For Integrated Tug Barge (ITB) units that are not certificated as tank vessels, the tonnage used to determine applicability of these regulations is the aggregate tonnage of the ITB combination, and the oil capacity used to determine the worst case discharge volume

is the aggregate oil capacity of the ITB combination.

(d) This subpart does not apply to the following types of vessels—

(1) Public vessels;

(2) Foreign-flag vessels engaged in innocent passage through the territorial sea or transit passage through a strait used for international navigation, unless bound for or departing from a port or place of the United States;

(3) Vessels that carry oil as a primary cargo and are required to submit a vessel response plan (VRP) in accordance with 33 CFR part 155, subpart D;

(4) Vessels constructed or operated in such a manner that no oil in any form can be carried onboard as fuel for propulsion or cargo;

(5) Permanently moored craft; and

(6) Inactive vessels.

Note to § 155.5015: VRP requirements for tank vessels are found in subpart D of this part.

§ 155.5020 Definitions.

Except as otherwise defined in this section, the definitions in §§ 155.110 and 155.1020 apply to this subpart. For the purposes of this subpart only, the term—

Cargo means oil, not carried as fuel, which is carried in bulk, and that is transported to and off-loaded at a port or place by a vessel. It does not include—

(1) Oil carried in integral tanks, marine portable tanks, or independent tanks for use by machinery, helicopters, and boats carried onboard the vessel, or for use by helicopters that are directly supporting the vessel's primary operations;

(2) Oil transferred from a towing vessel to a vessel in its tow to operate installed machinery other than the propulsion plant; or

(3) Oil recovered during oil spill response operations.

Contract or other approved means includes—

(1) A written contractual agreement between a vessel owner or operator and a required response resource provider. The agreement must identify and ensure the availability of specified personnel and equipment required under this subpart within stipulated response times in the applicable Captain of the Port (COTP) zone or specified geographic areas;

(2) Certification by the vessel owner or operator that specified personnel and equipment required under this subpart are owned, operated, or under the direct control of the vessel owner or operator, and are available within stipulated response times in the applicable COTP zone or specified geographic areas;

(3) Active membership with a local or regional required response resource provider that has identified specific personnel and equipment required under this subpart that are available to respond to a discharge within stipulated response times in the COTP zone or specified geographic areas;

(4) A document that—

(i) Identifies the personnel, equipment, and services capable of being provided by the required response resource provider within stipulated response times in the COTP zone or specified geographic areas;

(ii) Sets out the parties' acknowledgment that the required response resource provider intends to commit the resources in the event of a response;

(iii) Permits the Coast Guard to verify the availability of the identified response resources through tests, inspections, and exercises; and

(iv) Is referenced in the vessel response plan; or

(5) With the written consent of the required response resource provider, the identification of a required response resource provider with specified equipment and personnel that are available within stipulated response times in the COTP zone, port area, or specified geographic area. This paragraph is ''other approved means'' for only—

(i) Nontank vessels with a fuel and cargo oil capacity of less than 250 barrels for maximum most probable discharge oil spill removal response resource requirements per 33 CFR 155.5050(e);

(ii) Nontank vessels that carry group I through group IV petroleum oils as fuel or cargo with a capacity of 250 barrels or greater, but less than 2,500 barrels, for salvage, emergency lightering, and marine firefighting response resources per 33 CFR 155.5050(i)(2);

(iii) Nontank vessels that carry group I through group IV petroleum oils as fuel or cargo with a capacity less than 250 barrels for salvage response resources in 33 CFR 155.5050(i)(3);

(iv) Nontank vessels that carry group II through group IV petroleum oils as fuel or cargo with a capacity of 250 barrels or greater, but less than 2,500 barrels, for dispersant response resources per 33 CFR 155.5035(i)(7) and 33 CFR 155.5050(j); and

(v) Nontank vessels that carry groups I through IV petroleum oils as fuel or cargo with a capacity of 250 barrels or greater, but less than 2,500 barrels, for aerial oil spill tracking to support oil spill assessment and cleanup activities per 33 CFR 155.5050(k).

Fuel means all oils of any kind, which may be used to supply power or lubrication for primary or auxiliary purposes onboard the vessel in which it is carried.

Inactive vessel means a vessel that is out of service or laid up and has emptied its tanks of fuel except for the minimum amount of fuel necessary for the maintenance of the vessel's material condition. Such a vessel is considered not to be operating on the navigable waters of the United States for the purposes of 33 U.S.C. 1321(j)(5), unless the cognizant COTP determines that it poses an unacceptable risk to the marine environment due to the amount of oil carried for maintenance. A vessel would not be considered inactive if it carried oil as a cargo or cargo residue.

Integrated Tug Barge or *ITB* means any tug barge combination in which a specially designed propulsion unit (tug) is mated to a cargo unit (barge) of a compatible special design or where a propulsion unit (tug) is mated to a cargo unit (barge) with a specially designed connection system such that the combined unit has operating characteristics and seakeeping capabilities that exceed, under all anticipated weather conditions, those of a tug and barge, where the tug is secured in the barge notch or on fenders by means such as wire rope, chains, lines, or other tackle now commonly used in offshore towing.

Maximum most probable discharge or *MMPD* means a discharge of—

(1) Two thousand five hundred (2,500) barrels of oil, for vessels with a fuel and cargo capacity equal to or greater than 25,000 barrels; or

(2) Ten percent of the vessel's fuel and cargo capacity, for vessels with a fuel and cargo capacity of less than 25,000 barrels.

Navigable waters of the United States means navigable waters of the United States as defined in 33 CFR 2.36(b)(1), including the waters in 46 U.S.C. 2101(17a).

Nontank vessel means a vessel meeting the description provided in 33 CFR 155.5015(a).

Oil spill removal organization or *OSRO* means any person or persons who own(s) or otherwise control(s) oil spill removal resources that are designed for, or are capable of, removing oil from the water or shoreline. Control of such resources through means other than ownership includes leasing or subcontracting of equipment or, in the case of trained personnel, by having contracts, evidence of employment, or consulting agreements. OSROs provide response equipment and services, individually or in combination with subcontractors or associated contractors, under contract or other approved means, directly to a vessel owner or operator of a vessel or a facility required to have a response plan under 33 U.S.C. 1321(j)(5). OSROs are able to mobilize and deploy equipment or trained personnel and remove, store, and transfer recovered oil. Persons such as sales and marketing organizations (e.g., distributorships and manufacturer's representatives) that warehouse or store equipment for sale are not OSROs.

P&I Club means a protection and indemnity insurance group that provides liability insurance cover for the vessel owner or operator that would respond to an oil discharge or substantial threat of such a discharge by the vessel.

Permanently moored craft means a watercraft that is not considered to be a vessel under the rule of construction in 1 U.S.C. 3, because it is not practically (as opposed to theoretically) used or capable of being used as a means of transportation on the water.

Public vessel means a vessel owned or bareboat-chartered and operated by the

United States, or by a State or political subdivision thereof, or by a foreign nation, except when such vessel is engaged in commerce.

Qualified individual or *QI* and *alternate qualified individual* means a shore-based representative of a vessel owner or operator who meets the requirements of 33 CFR 155.5026.

Substantial threat of such a discharge means any incident involving a vessel that may create a significant risk of discharge of fuel or cargo oil. Such incidents include, but are not limited to, groundings, allisions, strandings, collisions, hull damage, fires, explosions, loss of propulsion, floodings, on-deck spills, or other similar occurrences.

Tier means the combination of required response resources and the times within which the resources must arrive on scene. Appendix B of this part, especially Tables 5 and 6, provide specific guidance on calculating the response resources required by a respective tier. Section 155.5050(g) sets forth the required times within which the response resources must arrive on scene. Tiers are applied to three categories of areas—

(1) Higher volume port areas;

(2) The Great Lakes; and

(3) All other operating environments, including rivers and canals, inland, nearshore, offshore, and open ocean areas.

Transfer means any movement of oil to or from a vessel by means of pumping, gravitation, or displacement. A transfer is considered to begin when the person in charge of the transferring vessel or facility and the person in charge of the receiving facility or vessel first meet to begin completing the declaration of inspection required by 33 CFR 156.150. A transfer is considered to be complete when all the connections for the transfer have been uncoupled and secured with blanks or other closure devices and both of the persons in charge have completed the declaration of inspection to include the date and time they complete the transfer.

Worst case discharge or *WCD* means a discharge in adverse weather conditions of a vessel's entire fuel or cargo oil, whichever is greater.

§ 155.5021 Operating restrictions.

Nontank vessels subject to this subpart may not—

(a) Operate upon the navigable waters of the United States unless in compliance with a vessel response plan (VRP) approved under § 155.5065.

(b) Continue to operate on the navigable waters of the United States if—

(1) The Coast Guard determines that the response resources identified in the vessel's certification statement do not meet the requirements of this subpart;

(2) The contracts or agreements required in §§ 155.5050 and 155.5052 and the vessel's certification statement are no longer valid;

(3) The vessel is not operating in compliance with the submitted VRP; or

(4) The period of the VRP authorization has expired.

§ 155.5023 Interim operating authorization.

(a) Notwithstanding the requirements of § 155.5021 of this subpart, a vessel may continue to operate for up to 2 years after the date of submission of a vessel response plan (VRP) pending approval of that VRP, if the vessel has received written authorization for continued operations from the Coast Guard.

(b) To receive this authorization, the vessel owner or operator must certify in writing with an original or electronic signature to the Coast Guard that the vessel owner or operator has identified and has ensured, by contract or other approved means, the availability of the necessary private response resources to respond, to the maximum extent practicable, to a worst case discharge or substantial threat of such a discharge from their vessel.

(c) Those nontank vessels temporarily authorized to operate under the provisions provided in this section must comply with 33 CFR 155.1070(c), (d), and (e).

§ 155.5025 One-time port waiver.

(a) If the vessel owner or operator seeks a one-time port waiver, they must certify in writing or using electronic signatures acceptable to the Coast Guard, prior to the vessel's entry

into the Captain of the Port (COTP) zone, that they have met the requirements of—

(1) 33 CFR 155.1025(e)(1) through (3); and

(2) The vessel owner or operator has identified and ensured the availability of, through contract or other approved means, the private response resources necessary to respond, to the maximum extent practicable under the criteria in § 155.5050 to a worst case discharge or substantial threat of discharge from the vessel in the applicable COTP zone.

(b) Once the vessel owner or operator satisfies the requirements of paragraph (a) of this section, the cognizant U.S. Coast Guard COTP may grant written authorization for that nontank vessel to make one voyage in the respective geographic-specific area not covered by the vessel response plan.

(c) All requirements of this subpart must be met by a nontank vessel that received a one-time port waiver, for any subsequent voyage to the same geographic-specific area.

§ 155.5026 Qualified individual and alternate qualified individual.

The vessel response plan must identify a qualified individual and at least one alternate who meet the requirements of 33 CFR 155.1026. The qualified individual or alternate qualified individual must be available on a 24-hour basis.

§ 155.5030 Nontank vessel response plan requirements: General content.

(a) The entire vessel response plan (VRP) must be written in English and, if applicable, in a language that is understood by the crew members with responsibilities under the VRP.

(b) The VRP must cover all geographic areas of the United States in which the vessel intends to handle, store, or transport oil, including port areas and offshore transit areas.

(c) The VRP must be divided into the following sections—

(1) General information and introduction;

(2) Notification procedures;

(3) Shipboard spill mitigation procedures;

(4) Shore-based response activities;

(5) List of contacts;

(6) Training procedures;

(7) Exercise procedures;

(8) Plan review and update procedures;

(9) Geographic-specific appendix (GSA) for each Captain of the Port (COTP) zone in which the vessel or vessels operate; and

(10) An appendix for vessel-specific information for the vessel or vessels covered by the VRP.

(d) A vessel owner or operator with multiple vessels may submit one plan for all classes of vessels (*i.e.*, subpart D-Manned vessels carrying oil as primary cargo and unmanned vessels carrying oil as primary cargo; subpart E– Tankers loading cargo at a facility permitted under the Trans-Alaska Pipeline Authorization Act; subpart F— Vessels carrying animal fats and vegetable oils as primary cargo; and subpart G— Vessels carrying other non-petroleum oils as a primary cargo) with a separate vessel-specific appendix for each vessel covered by the plan and a separate GSA for each COTP zone in which the vessel(s) will operate.

(e) A VRP must be divided into the sections described in paragraph (c) of this section unless the VRP is supplemented with a cross-reference table to identify the location of the information required by this subpart.

(f) The information contained in a VRP must be consistent with—

(1) The National Oil and Hazardous Substances Pollution Contingency Plan (NCP) (40 CFR part 300) and the Area Contingency Plan(s) (ACP) in effect on the date 6 months prior to the submission date of the VRP; or

(2) Most recent NCP and ACP(s).

Note to § 155.5030(f)(1): See diagram of ''Relationship of Plans'' at 40 CFR 300.210.

(g) Copies of the submitted and approved VRP must be available as follows—

(1) The vessel owner or operator must ensure that they maintain one English language copy of the VRP, at a minimum the contents listed in paragraph (c)(1), (2), (3), (5), (6), (7), (9) and (10) of this section and a copy of the Coast Guard approval letter, onboard the vessel. In lieu of paper format, the vessel

owner or operator may keep an electronic copy of the VRP and approval letter onboard the vessel. If applicable, additional copies of the required VRP sections must be in the language understood by crew members with responsibilities under the VRP and maintained onboard the vessel; and

(2) The vessel owner or operator must also maintain a current copy of the entire VRP and ensure that each person identified as a qualified individual and alternate qualified individual in the VRP has a current copy of the entire VRP. An electronic copy of the VRP is authorized.

(h) Compliance with this subpart will also constitute compliance for a U.S.-flag nontank vessel required to submit a Shipboard Oil Pollution Emergency Plan (SOPEP) pursuant to 33 CFR 151.09(c) and Regulation 37 of MARPOL 73/78 Annex I as long as the additional requirements listed in § 155.5035(k) are met. A U.S.-flag nontank vessel holding a valid Certificate of Inspection endorsed for Coastwise or Oceans operating routes with authorization to engage on an international voyage must maintain a U.S. Coast Guard SOPEP approval letter per 33 CFR 151.27(e). A separate SOPEP is not required.

§ 155.5035 Nontank vessel response plan requirements: Specific content.

(a) *General information and introduction section*. This section of the vessel response plan (VRP) must include—

(1) The vessel's name, country of registry, call sign, official number, and International Maritime Organization (IMO) international number (if applicable). If the VRP covers multiple vessels, this information should be provided for each vessel;

(2) The name, mailing address, email address, telephone number, and facsimile number, and procedures for contacting the vessel's owner or operator on a 24-hour basis;

(3) A list of the Captain of the Port (COTP) zones, ports, and offshore transit areas in which the vessel intends to operate;

(4) A table of contents or index of sufficient detail to permit personnel with responsibilities under the VRP to locate the specific sections of the VRP; and

(5) A record of change(s) page to record information on VRP reviews, updates, or revisions.

(b) *Notification procedures section*. This section of the VRP must include the following information—

(1) A checklist with all notifications, including telephone or other contact numbers, in order of priority to be made by shipboard or shore-based personnel and the information needed for those notifications. Notifications should include those required by—

(i) International Convention for the Prevention of Pollution from Ships (MARPOL) 73/78 (as set forth in 33 CFR 151.26 and 33 CFR part 153); and

(ii) Any applicable State;

(2) Identification of the person(s) to be notified of a discharge or substantial threat of a discharge of oil. If the notifications vary due to vessel location, the persons to be notified also should be identified in a geographic-specific appendix (GSA). This section should separately identify—

(i) The individual(s) or organization(s) to be notified by shipboard personnel; and

(ii) The individual(s) or organization(s) to be notified by shore-based personnel;

(3) The procedures for notifying the qualified individual(s) designated by the vessel's owner or operator;

(4) Descriptions of the primary and, if available, secondary communications methods by which the notifications would be made. These should be consistent with those in paragraph (b)(1) of this section;

(5) The information that is to be provided in the initial and any follow-up notifications under paragraph (b)(1) of this section;

(i) The initial notification may be submitted in accordance with IMO Resolution A.851(20), ''General Principles for Ship Reporting Systems and Ship Reporting Requirements, Including Guidelines for Reporting Incidents Involving Dangerous Goods, Harmful Substances and/or Marine Pollutants'' (incorporated by reference, see § 155.140). However, the VRP must specify that the notification includes at least the following information—

(A) Vessel name, country of registry, call sign, and official number (if any);

(B) Date and time of the incident;

(C) Location of the incident;

(D) Course, speed, and intended track of vessel;

(E) Radio station(s) and frequencies guarded;

(F) Date and time of next report;

(G) Type and quantity of oil onboard;

(H) Nature and detail of defects, deficiencies, and damage (e.g., overfill of tanks, grounding, collision, hull failure, etc.);

(I) Details of pollution, including estimate of amount of oil discharged or threat of discharge;

(J) Weather and sea conditions on scene;

(K) Ship size and type;

(L) Actions taken or planned by persons on scene;

(M) Current conditions of the vessel;

(N) Number of crew and details of injuries, if any; and

(O) Details of Protection and Indemnity (P&I) Club and Local Correspondent, as applicable.

(ii) The VRP must state that after transmission of the initial notification, as much information as possible that is essential for the protection of the marine environment will be reported to the appropriate on-scene coordinator in follow-up reports. This information must include—

(A) Additional details on the type of oil onboard;

(B) Additional details on the condition of the vessel and the ability to offload cargo and transfer ballast and fuel;

(C) Additional details on the quantity, extent, and movement of the pollution and whether the discharge is continuing;

(D) Any changes in the on-scene weather or sea conditions; and

(E) Actions being taken with regard to the discharge and the movement of the ship; and

(6) Identification of the person(s) to be notified of a vessel casualty potentially affecting the seaworthiness of a vessel and the information to be provided by the vessel's crew to shore-based personnel to facilitate the assessment of damage stability and stress.

(c) *Shipboard spill mitigation procedures section*. This section of the VRP must include—

(1) Procedures for the crew to mitigate or prevent any discharge or a substantial threat of a discharge of oil resulting from shipboard operational activities associated with internal or external oil transfers. Responsibilities of vessel personnel should be identified by job title and licensed/unlicensed position, if applicable. These procedures should address personnel actions in reference to—

(i) Internal transfer system leaks;

(ii) Fuel tank overflows;

(iii) Suspected tank or hull leaks;

(iv) Assessment and monitoring activities;

(v) Personnel protection issues;

(vi) Protective equipment;

(vii) Threats to health and safety;

(viii) Containment and other response techniques;

(ix) Isolation procedures;

(x) Decontamination of personnel; and

(xi) Disposal of removed oil and clean-up materials;

(2) Procedures in the order of priority for the crew to mitigate or prevent any discharge or a substantial threat of a discharge in the event of a casualty or emergency as listed in paragraphs (c)(2)(i) through (x) of this section. These procedures should be listed separately and reference specific vessel checklists required by the International Ship Management (ISM) Code, Section 8 (Resolution A.741(18), as amended by Resolution MSC.104(73)) (incorporated by reference, see §155.140), or other means that will ensure consideration of all appropriate factors when addressing a specific casualty. In addition to the checklists, specific personnel assignments for anticipated tasks must be identified. Reference to existing fire control plans and muster lists is sufficient to identify personnel responsibilities in the following scenarios—

(i) Grounding or stranding;

(ii) Explosion or fire, or both;

(iii) Collision or allision;

(iv) Hull failure;

(v) Excessive list;

(vi) Containment system failure;

(vii) Submerged and foundered;

(viii) Wrecked and stranded;

(ix) Hazardous vapor release; and

(x) Equipment failure (e.g., main propulsion, steering gear, etc.);

(3) Procedures for the crew to deploy discharge removal equipment if the vessel is equipped with such equipment;

(4) The procedures for internal transfers of fuel in an emergency;

(5) The procedures for ship-to-ship transfers of fuel in an emergency—

(i) The format and content of the ship-to-ship transfer procedures should be consistent with the ''Ship to Ship Transfer Guide (Petroleum),'' published jointly by the International Chamber of Shipping and the Oil Companies International Marine Forum (OCIMF) (incorporated by reference, see § 155.140);

(ii) The procedures should identify the specific response resources necessary to carry out the internal or external transfers, including—

(A) Fendering equipment (ship-to-ship only);

(B) Transfer hoses and connection equipment;

(C) Portable pumps and ancillary equipment;

(D) Lightering or fuel removal and mooring masters (ship-to-ship only); and

(E) Vessel and barge brokers (ship-to-ship only);

(iii) Reference may be made to a separate fuel oil transfer procedure and lightering plan carried onboard the vessel, if safety considerations are summarized in the plan; and

(iv) The location of all equipment and fittings, if any, carried onboard the vessel to perform the transfers should be identified;

(6) The procedures and arrangements for emergency towing, including the rigging and operation of any emergency towing equipment, if any, carried onboard the vessel;

(7) The location, crew responsibilities, and procedures for use of shipboard equipment that might be carried to mitigate an oil discharge;

(8) The crew's responsibility, if any, for recordkeeping and sampling of spilled oil. Any requirements for sampling must address safety procedures to be followed by the crew;

(9) The crew's responsibilities, if any, to initiate a response and supervise shore-based response resources;

(10) Damage stability and hull stress considerations when performing shipboard mitigation measures. This section of the VRP should identify and describe—

(i) Activities in which the crew is trained and qualified to execute absent shore-based support or advice; and

(ii) The information to be collected by the vessel's crew to facilitate shore-based assistance;

(11) Location of vessel plans necessary to perform salvage, stability, and hull stress assessments—

(i) The vessel owner or operator should ensure that a copy of these plans is maintained ashore by either the vessel owner or operator or the vessel's recognized classification society, unless the vessel has prearranged for a shore-based damage stability and residual strength calculation program with the vessel's baseline strength and stability characteristics pre-entered. The VRP should indicate the shore location and 24-hour access procedures of the calculation program for the following plans, where available—

(A) General arrangement plan;

(B) Midship section plan;

(C) Lines plan or table of offsets;

(D) Tank tables;

(E) Load line assignment; and

(F) Light ship characteristics; and

(ii) The VRP should identify the shore location and 24-hour access procedures for the computerized, shore-based damage stability and residual structural strength calculation programs, if available; and

(12) Procedures for implementing personnel safety mitigation strategies for all personnel involved. These procedures may contain more, but must address the following—

(i) Assessment and monitoring activities;

(ii) Personnel protection issues;

(iii) Protective equipment;

(iv) Threats to health and safety;

(v) Containment and other response techniques;

(vi) Isolation procedures;

(vii) Decontamination of personnel; and

(viii) Disposal of removed oil and clean-up materials.

(d) *Shore-based response activities section.* This section of the VRP should include the following information—

(1) The qualified individual's (QI) responsibilities and authority, including immediate communication with the Federal On-Scene Coordinator (FOSC) and notification of the oil spill removal organization(s) identified in the VRP;

(2) If applicable, procedures for transferring responsibility for direction of response activities from vessel personnel to the shore-based spill management team;

(3) The procedures for coordinating the actions of the vessel owner or operator or qualified individual with the predesignated FOSC responsible for overseeing or directing those actions;

(4) The organizational structure that would be used to manage the response actions. This structure should include the following functional areas and information for key components within each functional area—

(i) Command and control;

(ii) Public information;

(iii) Safety;

(iv) Liaison with government agencies;

(v) Spill response operations;

(vi) Planning;

(vii) Logistics support; and

(viii) Finance; and

(5) The responsibilities and duties of, and functional job descriptions for each oil spill management team position within the organizational structure identified in paragraph (d)(4) of this section.

(e) *List of contacts section.* The name, location, and 24-hour contact information for the following key individuals and organizations must be included in this section of the VRP or, if more appropriate, in a GSA, and referenced in this section of the VRP—

(1) Vessel owner or operator;

(2) Qualified individual and alternate qualified individual for the vessel's area of operation;

(3) Applicable insurance provider, representative, or surveyor for the vessel's area of operation;

(4) The vessel's local agent(s) for the vessel's area of operation, or a reference to the 24-hour point of contact as listed on the vessel's notice of arrival;

(5) Person(s) within the oil spill removal organization to notify for activation of that oil spill removal organization for the three spill scenarios identified in paragraph (i)(1)(v) of this section for the vessel's area of operation;

(6) Person(s) within the identified response organization to notify for activating the organizations to provide—

(i) The required emergency lightering and fuel offloading required by §§ 155.5050(i) and 155.5052 as applicable;

(ii) The required salvage and marine firefighting required by §§ 155.5050(i) and 155.5052 as applicable;

(iii) The required dispersant response equipment required by § 155.5050(j), as applicable; and

(iv) The required aerial oil spill tracking and observation resources required by § 155.5050(k), as applicable; and

(7) Person(s) to notify for activation of the spill management team for the spill response scenarios identified in paragraph (i)(5) of this section for the vessel's area of operation.

(f) *Training procedures section.* This section of the VRP must address the training procedures and programs of the vessel owner or operator to meet the requirements in § 155.5055.

(g) *Exercise procedures section.* This section of the VRP must address the exercise program to be carried out by the vessel owner or operator to meet the requirements in § 155.5060.

(h) *Plan review, update, revision, amendment, and appeal procedure section.* This section of the VRP must address the procedures the vessel owner or operator must follow—

(1) To meet the requirements of §§ 155.5070 and 155.5075; and

(2) For any post-discharge review of the VRP to evaluate and validate its effectiveness.

(i) *GSAs for each COTP zone in which a vessel operates section.* A GSA must be included for each COTP zone identified.

(1) The appendices must include the following information or identify the location of such information within the VRP—

(i) A list of the geographic areas (port areas, rivers and canals, Great

Lakes, inland, nearshore, offshore, and open ocean areas) in which the vessel intends to handle, store, or transport oil as fuel or cargo within the applicable COTP zone;

(ii) The volume and group of oil on which the required level of response resources are calculated;

(iii) Required Federal or State notifications applicable to the geographic areas in which a vessel operates;

(iv) Identification of the QI; and

(v) Identification of the oil spill removal organization(s) (OSRO) that are identified and ensured available, through contract or other approved means, and the spill management team to respond to the following spill scenarios, as applicable—

(A) Average most probable discharge;

(B) Maximum most probable discharge; and

(C) Worst case discharge.

(2) Nontank vessels with a capacity less than 250 barrels must plan for and identify maximum most probable discharge response resources in the VRP but do not have to ensure these resources are available by contract. Submission of a written consent for plan listing from the recognized response resource provider must accompany the VRP for approval or revision. This is considered an acceptable ''other approved means.'' See 33 CFR 155.5020, paragraph (5) of the definition of ''Contract or other approved means.''

(3) The organization(s) identified to meet the requirements of paragraph (i)(1)(v) of this section must be capable of providing the equipment and supplies necessary to meet the requirements of §§155.5050 and 155.5052, as appropriate, and sources of trained personnel to continue operation of the equipment and staff the OSRO(s) and spill management team identified for the first 7 days of the response.

(4) The GSA must list the response resources and related information required under §§155.5050, 155.5052, and appendix B of this part, as appropriate.

(5) If the Coast Guard has evaluated an OSRO and has determined the OSROs capability is equal to or exceeds the response capability needed by the vessel, the GSA may identify only the OSRO and their applicable classification and not the information required in paragraph (i)(4) of this section. This information is subject to Coast Guard verification at any time during the validity of the VRP.

(6) The GSA must also separately list the companies identified to provide the salvage, emergency lightering, and marine firefighting resources required in this subpart. The GSA must list the response resources and related information required in paragraph (i)(4) of this section. This information is subject to Coast Guard verification at any time during the validity of the VRP.

(i) Nontank vessels with a capacity less than 2,500 barrels, but greater than or equal to 250 barrels, need only plan for and identify salvage, emergency lightering, and marine firefighting response resources, as required by subpart I, in the VRP but do not have to ensure these resources are available by contract. Submission of a written consent for plan listing from the recognized response resource provider must accompany the VRP for approval or revision. This is considered an acceptable ''other approved means.'' See 33 CFR 155.5020, paragraph (5) of the definition of ''Contract or other approved means.''

(ii) Nontank vessels with a capacity less than 250 barrels need only plan for and identify salvage response resources in the VRP but do not have to ensure these resources are available by contract. Submission of a written consent for plan listing from the recognized response resource provider must accompany the VRP for approval or revision. This is considered an acceptable ''other approved means.'' See 33 CFR 155.5020, paragraph (5) of the definition of ''Contract or other approved means.''

(7) For nontank vessels with a capacity of 2,500 barrels or greater that carry group II through group IV petroleum oils as fuel or cargo and that operate in waters where dispersant use pre-authorization agreements exist, the GSA must also separately list the resource providers and specific resources, including appropriately trained dispersant-application personnel, necessary to provide, if appropriate, the dispersant capabilities required in this subpart. All resource providers and resources must be available by contract or other

approved means. The dispersant resources to be listed within this section must include the following—

(i) Identification of each primary dispersant staging site to be used by each dispersant-application platform to meet the requirements of §155.5050(j) of this chapter; and

(ii) Identification of the platform type, resource provider, location, and dispersant payload for each dispersant-application platform identified. Location data must identify the distance between the platform's home base and the identified primary dispersant-staging site(s) for this section.

(8) For each unit of dispersant stockpile required to support the effective daily application capacity of each dispersant-application platform necessary to sustain each intended response tier of operation, identify the dispersant product resource provider, location, and volume. Location data must include the distance from the stockpile to the primary staging sites where the stockpile would be loaded on to the corresponding platforms. If the Coast Guard has evaluated an OSRO and has determined its capability meets the response capability needed by the vessel owner or operator, the section may identify the OSRO only, and not the information required in paragraphs (i)(7)(i), (i)(7)(ii), and (i)(8) of this section.

(9) Nontank vessels with an oil capacity of 250 barrels or greater, but less than 2,500 barrels, that carry group II through group IV petroleum oils as fuel or cargo and that operate in waters where dispersant use pre-authorization agreements exist, need only plan for and identify dispersant response resources but not ensure their availability by contract. Submission of a written consent from the dispersant response resource provider must accompany the VRP for approval or revision. This is considered an acceptable ''other approved means.'' See 33 CFR 155.5020, paragraph (5) of the definition of ''Contract or other approved means.''

(10) For nontank vessels with a fuel and cargo capacity of 2,500 barrels or greater not operating exclusively on the inland areas of the United States, the GSA must also separately list the resource providers and specific resources necessary to provide oil spill tracking capabilities required in this subpart. The oil spill tracking resources to be listed within this section must include the following—

(i) The identification of a resource provider; and

(ii) The type and location of aerial surveillance aircraft that have been ensured available, through contract or other approved means, to meet the oil spill tracking requirements of §155.1050(k) of this part.

(11) Nontank vessels with a capacity of 250 barrels or greater, but less than 2,500 barrels, need only plan for and identify aerial oil spill tracking response resources in the VRP, but do not have to ensure these resources are available by contract. Submission of a written consent for plan listing from the recognized response resource provider must accompany the VRP for approval or revision. This is considered an acceptable ''other approved means.'' See 33 CFR 155.5020, ''Contract or other approved means'', paragraph (5).

(j) *Appendices for vessel-specific information section*. This section of the VRP must include for each vessel covered by the VRP the following information, as applicable—

(1) List of the vessel's principal characteristics;

(2) Capacities of all cargo, fuel, lube oil, ballast, and fresh water tanks;

(3) The total volume and groups of oil that would be involved in a—

(i) Maximum most probable discharge; and

(ii) Worst case discharge;

(4) Diagrams showing location of all cargo, fuel, lube oil, and slop tanks, as applicable;

(5) General arrangement plan (can be maintained separately onboard the vessel providing the VRP identifies the specific location);

(6) Midships section plan (can be maintained separately onboard the vessel providing the VRP identifies the specific location);

(7) Cargo and fuel piping diagrams and pumping plan, as applicable (can be maintained separately onboard the vessel providing the VRP identifies the specific location);

(8) Damage stability data (can be maintained separately, providing the VRP identifies the specific location);

(9) Location of cargo and fuel stowage plan for vessel; and

(10) Location of information on the name, description, physical and chemical characteristics, health and safety hazards, and spill and firefighting procedures for the fuel and cargo oil onboard the vessel. A material safety data sheet meeting the requirements of 29 CFR 1910.1200, cargo information required by 33 CFR 154.310, or equivalent, will meet this requirement. This information can be maintained separately.

(k) *Required appendices for MARPOL 73/78 Annex I, Regulation 37, Shipboard Oil Pollution Emergency Plan (SOPEP) information*. U.S.-flag vessels not certificated for coastwise or oceans operating routes and foreign-flag vessels that are in compliance with Regulation 37 of MARPOL 73/78 Annex I are not required to comply with this paragraph. A vessel owner or operator of a U.S.-flag vessel constructed or certificated for coastwise or oceans operating routes, but that does not engage in international voyages, may request to be exempted from compliance with this paragraph through submission of a certified statement, attesting same, to Commandant (CG–CVC), Office of Commercial Vessel Compliance, which must accompany the new nontank vessel response submission or resubmission. U.S.-flag vessels that must comply with this paragraph must label the cover of their VRP as a MARPOL 73/78 Annex I, Regulation 37 Shipboard Oil Pollution Emergency Plan (SOPEP) and Coast Guard Nontank Vessel Response Plan. The following information must be submitted consistent with Regulation 37 of MARPOL 73/78 Annex I as set forth in 33 CFR 151.26—

(1) The introductory text required by 33 CFR 151.26(b)(1);

(2) The preamble statement regarding the purpose of the plans and how the plan relates to other shore-related plans as required by 33 CFR 151.26(b)(2);

(3) The information on authorities or persons to be contacted in the event of an oil pollution incident as required 33 CFR 151.26(b)(3)(iii). This information must also clearly specify who will be responsible for informing the necessary parties from the coastal State contacts, the port contacts, and the ship interest contacts. This information must include—

(i) An appendix containing coastal State contacts for those coastal States in which the vessel regularly transits the exclusive economic zone. The appendix should list those agencies or officials of administrations responsible for receiving and processing pollution incident reports;

(ii) An appendix of port contacts for those ports at which the vessel regularly calls; and

(iii) For Antarctica, reports must also be directed to any Antarctic station that may be affected in accordance with 33 CFR 151.26(b)(3)(iii)(C);

(4) Include the procedures and point of contact on the ship for coordinating shipboard activities with national and local authorities in combating an oil spill incident in accordance with 33 CFR 151.26(b)(5). The plan should address the need to contact the coastal State to advise them of action(s) being implemented and determine what authorization(s), if any, are needed; and

(5) Required information lists in separate appendices per 33 CFR 151.26(b)(6)(ii).

§ 155.5050 Response plan development and evaluation criteria for nontank vessels carrying groups I through IV petroleum oil.

(a) *Criteria for evaluating operability of response resources*. The criteria used to evaluate the operability of response resources identified in a vessel response plan (VRP) for specified operating environments must be in accordance with 33 CFR 155.1050(a).

(b) *Operating environment reclassification of specific bodies of water*. Captain of the Port (COTP) reclassification of a specific body of water or location within the COTP zone must be in accordance with 33 CFR 155.1050(b).

(c) *Criteria for response equipment*. Response equipment must—

(1) Meet or exceed the criteria listed in Table 1 of appendix B of this part;

(2) Be capable of functioning in the applicable operating environment; and

(3) Be appropriate for the amount of oil capable of being carried.

(d) *Average most probable discharge*. (1) The owner or operator of a nontank

vessel that carries groups I through IV petroleum oil as cargo must identify in the VRP and ensure the availability of, through contract or other approved means, the response resources that will respond to a discharge up to the vessel's average most probable discharge (AMPD). Nontank vessels that carry oil as cargo must meet the requirements for AMPD coverage, as applicable, per 33 CFR 155.1050(d).

(2) Nontank vessels that only carry groups I through IV petroleum oil as fuel do not have to ensure the availability of AMPD resources by contract or other approved means, but must plan for and identify response resources required in §155.1050(d)(1) and list this information in the applicable geographic-specific appendix for bunkering or fueling operations. Permission or acknowledgement from the listed resource providers is not required.

(e) *Maximum most probable discharge.* (1) The owner or operator of a nontank vessel with a capacity of 250 barrels or greater carrying groups I through IV petroleum oil as fuel or cargo must identify in the VRP and ensure the availability of, through contract or other approved means, the response resources necessary to respond to a discharge up to the vessel's maximum most probable discharge (MMPD) volume. For the purposes of meeting the requirements of this paragraph, vessel owners or operators must meet 33 CFR 155.1050(e).

(2) The owner or operator of a nontank vessel with a capacity less than 250 barrels must plan for and identify MMPD response resources in the VRP but do not have to ensure these resources are available by contract. Submission of a written consent for plan listing from the recognized response resource provider must accompany the VRP for approval or revision. This is considered an acceptable ''other approved means.'' See 33 CFR 155.5020, paragraph (5) of the definition of ''Contract or other approved means.''

(f) *Worst case discharge.* The owner or operator of a nontank vessel with a capacity of 2,500 barrels or greater carrying groups I through IV petroleum oil as fuel or cargo must identify in the VRP and ensure the availability of, through contract or other approved means, the response resources necessary to respond to discharges up to the worst case discharge (WCD) volume of the oil to the maximum extent practicable. For the purposes of meeting the requirements of this paragraph, vessel owners or operators must meet 33 CFR 155.1050(f). Nontank vessels need only plan for Tier 1 response resources.

(g) *Tier 1 response times.* Response equipment identified to respond to a WCD should be capable of arriving on scene within the times specified in this paragraph for the applicable response in a higher volume port area, Great Lakes, or in other areas. Table 155.5050(g) details response times for this tier, from the time of discovery of a discharge.

TABLE 155.5050(g)—RESPONSE TIMES FOR TIER 1

Tier 1	
Higher volume port area	12 hrs.
Great Lakes	18 hrs.
All other operating environments, including rivers and canals, inland, nearshore, offshore, and open ocean areas.	24 hrs.

(h) *Planning standards for the mobilization and response times for required MMPD and WCD response resources.* For the purposes of arranging for MMPD or WCD response resources through contract or other approved means, response equipment identified for plan credit should be capable of being mobilized and en route to the scene of a discharge within 2 hours of notification. The notification procedures identified in the VRP should provide for notification and authorization for mobilization of response resources—

(1) Either directly or through the qualified individual; and

(2) Within 30 minutes of a discovery of a discharge or substantial threat of discharge.

(i) *Salvage, emergency lightering, and marine firefighting requirements.* The owner or operator of a nontank vessel carrying groups I through IV petroleum oil as fuel or cargo must plan for salvage, emergency lightering, and marine firefighting response resources, as applicable.

(1) Nontank vessels with a capacity of 2,500 barrels or greater must meet the salvage, emergency lightering, and marine firefighting requirements found in subpart I of this part.

(2) Nontank vessels with a capacity less than 2,500 barrels, but greater than or equal to 250 barrels, need to plan for and identify salvage, emergency lightering, and marine firefighting response resources found in subpart I in the VRP but do not have to ensure these resources are available by contract. Submission of a written consent for plan listing from the recognized response resource provider must accompany the VRP for approval or revision. This is considered an acceptable ''other approved means.'' See 33 CFR 155.5020, paragraph (5) of the definition of ''Contract or other approved means.''

(3) Nontank vessels with a capacity less than 250 barrels need to plan for and identify salvage response resources found in subpart I in the VRP but do not have to ensure these resources are available by contract. Submission of a written consent for plan listing from the recognized response resource provider must accompany the VRP for approval or revision. This is considered an acceptable ''other approved means.'' See 33 CFR 155.5020, paragraph (5) of the definition of ''Contract or other approved means.''

(j) *Dispersants.* (1) The owner or operator of a nontank vessel carrying groups II through IV petroleum oil as fuel or cargo with a capacity of 2,500 barrels or greater that operates in any area pre-authorized for dispersant use must identify in their VRP, and ensure the availability of, through contract or other approved means, response resources capable of conducting dispersant operations within those areas. Vessel owners or operators must meet 33 CFR 155.1050(k). These nontank vessels must meet Tier 1 for dispersant effective daily application capability.

(2) The owner or operator of a nontank vessel with a capacity less than 2,500 barrels, but greater than or equal to 250 barrels, needs to plan for and identify dispersant response resources in the VRP but do not have to ensure these resources are available by contract. Submission of a written consent for plan listing from the recognized response resource provider must accompany the VRP for approval or revision. This is considered an acceptable ''other approved means.'' See 33 CFR 155.5020, paragraph (5) of the definition of ''Contract or other approved means.''

(k) *Aerial oil spill tracking and observation response resources.* (1) The owner or operator of a nontank vessel carrying groups I through IV petroleum oil as fuel or cargo with a capacity of—

(i) 2,500 barrels or greater must identify in the VRP, and ensure availability of, through contract or other approved means, the response resources necessary to provide aerial oil spill tracking to support oil spill assessment and cleanup activities. Vessel owners or operators of these vessels must meet 33 CFR 155.1050(l).

(ii) Less than 2,500 barrels, but greater than 250 barrels, need to plan for and identify aerial oil tracking response resources in the VRP but do not have to ensure these resources are available by contract. Submission of a written consent for plan listing from the recognized response resource provider must accompany the VRP for approval or revision. This is considered an acceptable ''other approved means.'' See 33 CFR 155.5020, ''Contract or other approved means'', paragraph (5).

(2) Nontank vessels operating exclusively on the inland areas of the United States are not required to comply with paragraph (k) of this section.

(l) *Response resources necessary to perform shoreline protection operations.* The owner or operator of a nontank vessel carrying groups I through IV petroleum oil as fuel or cargo with a capacity of 250 barrels or greater must identify in the VRP, and ensure the availability of, through contract or other approved means, the response resources necessary to perform shoreline protection operations. The response resources must include the quantities of boom listed in Table 2 of appendix B of this part, based upon the specific COTP zones in which the vessel operates.

(m) *Shoreline cleanup operations.* The owner or operator of a nontank vessel

carrying groups I through IV petroleum oil as fuel or cargo with a capacity of 250 barrels or greater must identify in the VRP, and ensure the availability of, through contract or other approved means, an oil spill removal organization capable of effecting a shoreline cleanup operation commensurate with the quantity of emulsified petroleum oil to be planned for in shoreline cleanup operations. The shoreline cleanup resources required must be determined as described in appendix B of this part.

(n) *Practical and technical limits of response capabilities.* Appendix B of this part sets out response capability capacities (caps) that recognize the practical and technical limits of response capabilities for which an individual vessel owner or operator can contract in advance. Table 6 in appendix B lists the contracting caps that are applicable. The owner or operator of a nontank vessel carrying groups I through IV petroleum oil as fuel or cargo, with a capacity of 2,500 barrels or greater, whose required daily recovery capacity exceeds the applicable contracting caps in Table 6, must identify commercial sources of additional equipment equal to twice the cap listed for each tier or the amount necessary to reach the calculated planning volume, whichever is lower, to the extent that this equipment is available. The equipment so identified must be capable of arriving on scene no later than the applicable tier response times contained in § 155.5050(g) or as quickly as the nearest available resource permits. A VRP must identify the specific sources, locations, and quantities of this additional equipment. No contract is required.

(o) *Review of response capability limits.* The Coast Guard will continue to evaluate the environmental benefits, cost efficiency, and practicality of increasing mechanical recovery capability requirements. This continuing evaluation is part of the Coast Guard's long term commitment to achieving and maintaining an optimum mix of oil spill response capability across the full spectrum of response modes. As best available technology demonstrates a need to evaluate or change mechanical recovery capacities, a review of cap increases and other requirements contained within this subpart may be performed. Any changes in the requirements of this section will occur through a rulemaking process. During this review, the Coast Guard will determine if established caps remain practicable and if increased caps will provide any benefit to oil spill recovery operations. The review will include, at least, an evaluation of—

(1) Best available technologies for containment and recovery;

(2) Oil spill tracking technology;

(3) High rate response techniques;

(4) Other applicable response technologies; and

(5) Increases in the availability of private response resources.

(p) *Nontank vessel response plan required response resources matrix.* Table 155.5050(p) summarizes the VRP required response resources.

TABLE 155.5050(p)—NONTANK VESSEL RESPONSE PLAN REQUIRED RESPONSE RESOURCES MATRIX

Nontank vessel's fuel and cargo oil capacity	AMPD	MMPD	WCD	Salvage	Emergency lightering	Fire fighting	Dispersant [3]	Aerial tracking [4]	Shoreline protection	Shore line cleanup
2,500 barrels or greater	NO [1]	YES	YES	YES	YES	YES	YES	YES	YES	YES.
Less than 2,500 barrels, but greater than or equal to 250 barrels.	NO [1]	YES	NO	YES [2]	YES [2]	YES [2]	YES [2]	YES [2]	YES	YES.
Less than 250 barrels	NO [1]	YES [2]	NO	YES [2]	NO	NO	NO	NO	NO	NO.

[1]—For nontank vessels carrying oil as fuel only. Nontank vessels carrying oil as cargo must meet AMPD response resources in 33 CFR 155.5050(d)(1) as applicable.

[2]—The indicated response resources that must be located within the stipulated response times in the specified geographic areas need only be identified and planned for in the VRP, but not ensured available by contract. Submission of a written consent from the response resource provider must accompany the VRP for approval. This is considered an acceptable ''other approved means.'' See 33 CFR 155.5020, ''Contract or other approved means'', paragraph (5).

[3]—Dispersant response resources are only required for waters where dispersant pre-authorization has been authorized IAW the Area Contingency Plan. See 33 CFR 155.5050(j).

[4]—Aerial oil spill tracking response resources are not required for inland areas.

§ 155.5052 Response plan development and evaluation criteria for nontank vessels carrying group V petroleum oil.

Owners or operators of nontank vessels that carry group V petroleum oil as fuel or cargo must meet the requirements of 33 CFR 155.1052.

§ 155.5055 Training.

(a) For nontank vessels with an oil capacity of 250 barrels or greater—

(1) A vessel response plan (VRP) submitted to meet the requirements of § 155.5035 must identify the training to be provided to persons having responsibilities under the VRP, including members of the vessel crew, the qualified individual, and the spill management team. The training program must differentiate between that training provided to vessel personnel and that training provided to shore-based personnel. Appendix C of this part provides additional guidance regarding training; and

(2) A vessel owner or operator must comply with the vessel response plan training requirements of 33 CFR 155.1055.

(b) For nontank vessels with an oil capacity of less than 250 barrels, a vessel owner or operator must comply with the VRP training requirements of paragraph (a) of this section or the Alternative Training and Exercise Program requirements of § 155.5061.

§ 155.5060 Exercises.

(a) For nontank vessels with an oil capacity of 250 barrels or greater—

(1) A vessel owner or operator required by § 155.5035 to have a vessel response plan (VRP) must conduct exercises as necessary to ensure that the VRP will function in an emergency. Vessel owners or operators must include both announced and unannounced exercises; and

(2) A vessel owner or operator must comply with the VRP exercise requirements of 33 CFR 155.1060.

(b) For nontank vessels with an oil capacity of less than 250 barrels, a vessel owner or operator must comply with the VRP exercise requirements of paragraph (a) of this section or the Alternative Training and Exercise Program requirements of § 155.5061.

§ 155.5061 Alternative Training and Exercise Program.

(a) Owners or operators of nontank vessels with an oil capacity of less than 250 barrels, in lieu of the training and exercise requirements of §§ 155.5055 and 155.5060, may meet an Alternative Training and Exercise Program that has been approved by the Commandant (CG–CVC) for meeting the requirements of this section.

(b) Vessel owners or operators must make available to the Coast Guard, upon request, any information related to implementation of an approved Alternative Training and Exercise Program.

(c) For approval of an Alternative Training and Exercise Program the vessel owners or operators must submit to the Commandant (CG–CVC) for review and approval: The Alternative Training and Exercise Program and the following information to assess the adequacy of the proposed Alternative Training and Exercise Program—

(1) A list of the vessels to which the Alternative Training and Exercise Program is intended to apply;

(2) An explanation of how the Alternative Training and Exercise Program addresses the requirements of 33 CFR 155.1055(b) through (f) and 33 CFR 155.1060; and

(3) An explanation of how vessel owners or operators must implement the Alternative Training and Exercise Program in its entirety, including performing verification of implementation.

(d) Amendments to the Alternative Training and Exercise Program approved under this section may be initiated by the submitter of an Alternative Training and Exercise Program.

(e) Approval of the Alternative Training and Exercise Program is required before a vessel may receive a nontank vessel response plan approval letter.

(f) The Commandant (CG–CVC) will examine each submission for compliance with this section and—

(1) If the submission meets all the requirements, the Coast Guard will consider the training and exercise program requirements under this section to be satisfactory; or

(2) If the Coast Guard determines that the submission does not meet all of the requirements, the submitter will be notified of the deficiencies. The submitter may then resubmit a revised request within the time period specified.

§ 155.5062 Inspection and maintenance of response resources.

The owner or operator of a nontank vessel required to submit a vessel response plan under this part must comply with the response resource inspection and maintenance requirements of 33 CFR 155.1062.

§ 155.5065 Procedures for plan submission and approval.

(a) An owner or operator of a nontank vessel, to which this subpart applies, must submit one complete English language copy of a vessel response plan (VRP) to Commandant (CG–CVC), Office of Commercial Vessel Compliance, U.S. Coast Guard, 2100 2nd St. SW. Stop 7581, Washington, DC 20593–7581, Attn: Vessel Response Plan Review Team. The VRP must be submitted at least 60 days before the vessel intends to operate upon the navigable waters of the United States.

(b) The owner or operator of a nontank vessel must include a statement certifying that the VRP meets the applicable requirements of this subpart and the requirements of subparts D, E, F, and G, if applicable. The vessel owner or operator must also include a statement certifying that the vessel owner or operator has ensured the availability of, through contract or other approved means, the necessary private response resources to respond, to the maximum extent practicable, to a worst case discharge or substantial threat of such a discharge from their vessel as required under this subpart. VRPs should be submitted electronically by using the Vessel Response Plan Electronic Submission Tool available at *https://homeport.uscg.mil/vrpexpress*. If vessel owners or operators submit VRPs in paper format, CG Form ''Application for Approval/Revision of Vessel Pollution Response Plans'' (CG–6083) located at: *http://www.uscg.mil/forms/CG/CG__6083.pdf* meets the requirement for a VRP certification statement as required by this paragraph.

(c) If the Coast Guard determines that the VRP meets all requirements of this subpart, the Coast Guard will notify the vessel owner or operator with an approval letter. The VRP will be valid for a period of 5 years from the date of approval, conditional upon satisfactory annual updates.

(d) If the Coast Guard reviews the VRP and determines that it does not meet all of the requirements of this subpart, the Coast Guard will notify the vessel owner or operator of the VRP deficiencies. The vessel owner or operator must then resubmit a copy of the revised VRP or corrected portions of the VRP, within the time period specified in the written notice provided by the Coast Guard.

§ 155.5067 Alternative planning criteria.

(a) When the owner or operator of a nontank vessel believes that national planning criteria contained elsewhere in this part are inappropriate for the areas in which the vessel intends to operate, the vessel owner or operator may submit an alternative planning criteria request to the Coast Guard. Alternative planning criteria requests must be submitted 90 days before the vessel intends to operate under the proposed alternative, or as soon as is practicable. The alternative planning criteria request must be endorsed by the Captain of the Port (COTP) with jurisdiction over the geographic area(s) affected before being considered by Commandant (CG–CVC), Office of Commercial Vessel Compliance, for the review and approval of the respective vessel response plan (VRP). In any case, the request must be received by Commandant (CG–CVC) with an endorsement by the respective COTP no later than 21 days before the vessel intends to operate under the alternative planning criteria.

(b) The alternative planning criteria request should detail all elements of the VRP where deviations from the requirements in this subpart are being proposed or have not been met. Response equipment, techniques, or procedures identified in the alternative planning criteria request should be

submitted in accordance with the evaluation criteria of appendix B of this part. The request should contain at a minimum—

(1) Reason(s) and supporting information for the alternative planning criteria request;

(2) Identification of regulations necessitating the alternative planning criteria request;

(3) Proposals for alternative procedures, methods, or equipment standards, where applicable, to provide for an equivalent level of planning, response, or pollution mitigation strategies;

(4) Prevention and mitigation strategies that ensure low risk of spills and adequate response measures as a result of the alternative planning criteria; and

(5) Environmental and economic impact assessments of the effects.

(c) The determination of an alternative planning criteria request will be conducted by Commandant (CG–CVC), Office of Commercial Vessel Compliance.

§ 155.5070 Procedures for plan review, revision, and amendment.

(a) The owner or operator of a nontank vessel must review the vessel response plan (VRP) annually. This review must occur within 1 month of the anniversary date of Coast Guard approval of the VRP.

(b) A VRP prepared and submitted under this subpart must be revised and amended, as necessary, in accordance with § 155.1070.

§ 155.5075 Appeal procedures.

(a) A vessel owner or operator who disagrees with a deficiency determination may submit a petition for reconsideration to the Commandant (CG–5PC), Director of Inspections and Compliance, U.S. Coast Guard, 2100 2nd St. SW Stop 7581, Washington, DC 20593–7581 or *vrp@uscg.mil* within the time period required for compliance or within 7 days from the date of receipt of the Coast Guard notice of a deficiency determination, whichever is less. After considering all relevant material presented, the Coast Guard will notify the vessel owner or operator of the final decision.

(1) Unless the vessel owner or operator petitions for reconsideration of the Coast Guard's decision, the vessel's owner or operator must correct the vessel response plan (VRP) deficiencies within the period specified in the Coast Guard's initial determination.

(2) If the vessel owner or operator petitions the Coast Guard for reconsideration, the effective date of the Coast Guard notice of deficiency determination may be delayed pending a decision by the Coast Guard. Petitions to the Coast Guard must be submitted in writing, via the Coast Guard official who issued the requirement to amend the VRP, within 5 days of receipt of the notice.

(b) Within 21 days of notification that a VRP is not approved, the vessel owner or operator may appeal that determination to the Director of Inspections and Compliance. This appeal must be submitted in writing to Commandant (CG–5PC), Director of Inspections and Compliance, U.S. Coast Guard, 2100 2nd St. SW. Stop 7581, Washington, DC 20593–7581.

APPENDIX A TO PART 155—SPECIFICATIONS FOR SHORE CONNECTION

[See §§ 340, 350, 370 and 380 of this part]

Item	Description	Dimension
1	Outside diameter.	215 mm. (8 in.).
2	Inside diameter	According to pipe outside diameter.
3	Bolt circle diameter.	183 mm. (7 3/16 in.).
4	Slots in flange	6 holes 22 mm. (7/8 in.) in diameter shall be equidistantly placed on a bolt circle of the above diameter, slotted to the flange periphery. The slot width is to be 22 mm. (7/8 in.).
5	Flange thickness.	20 mm. (3/4 in.).
6	Bolts and nuts	6, each of 20 mm. (3/4 in.) in diameter and of suitable length.

The flange must be of steel having a flat face, with a gasket of oilproof material, and must be suitable for a service pressure of 6 kg./cm.2 (85 p.s.i.).

The steel materials used must meet the material specifications of standard B16.5, Steel Pipe Flanges and Flanged Fittings of the American National Standards Institute. (See § 154.106 of this chapter.)

[CGD 75–124, 45 FR 7176, Jan. 31, 1980]

APPENDIX B TO PART 155—DETERMINING AND EVALUATING REQUIRED RESPONSE RESOURCES FOR VESSEL RESPONSE PLANS

1. Purpose

1.1 The purpose of this appendix is to describe the procedures for identifying response resources to meet the requirements of subparts D, E, F, G, and J of this part. These guidelines will be used by the vessel owner or operator in preparing the response plan and by the Coast Guard to review vessel response plans. Response plans submitted under subparts F and G of this part will be evaluated under the guidelines in section 2 and Table 1 of this appendix.

2. Equipment Operability and Readiness

2.1 All equipment identified in a response plan must be capable of operating in the conditions expected in the geographic area in which a vessel operates. These conditions vary widely based on the location and season. Therefore, it is difficult to identify a single stockpile of response equipment that will function effectively in every geographic location.

2.2 Vessels storing, handling, or transporting oil in more than one operating environment as indicated in Table 1 must identify equipment capable of successfully functioning in each operating environment. For example, vessels moving from the ocean to a river port must identify appropriate equipment designed to meet the criteria for transiting oceans, inland waterways, rivers, and canals. This equipment may be designed to operate in all of these environments or, more likely, different equipment may be designed for use in each area.

2.3 When identifying equipment for response plan credit, a vessel owner or operator must consider the inherent limitations in the operability of equipment components and response systems. The criteria in Table 1 of this appendix must be used for evaluating the operability in a given environment. These criteria reflect the general conditions in certain operating areas.

2.4 Table 1 of this appendix lists criteria for oil recovery devices and boom. All other equipment necessary to sustain or support response operations in a geographic area must be designed to function in the same conditions. For example, boats which deploy or support skimmers or boom must be capable of being safely operated in the significant wave heights listed for the applicable operating environment. The Coast Guard may require documentation that the boom identified in a response plan meets the criteria in Table 1 of this appendix. Absent acceptable documentation, the Coast Guard may require that the boom be tested to demonstrate that it meets the criteria in Table 1 of this appendix. Testing must be in accordance with certain American Society for Testing Materials (ASTM) standards [ASTM F 715 (incorporated by reference, see §155.140) Standard Methods of Testing Spill Control Barrier Membrane Materials], or other tests approved by the Coast Guard.

2.5 A vessel owner or operator must refer to the applicable Area Contingency Plan to determine if ice, debris, and weather-related visibility are significant factors in evaluating the operability of equipment. The Area Contingency Plan will also identify the average temperature ranges expected in a geographic area in which a vessel operates. All equipment identified in a response plan must be designed to operate within those conditions or ranges.

2.6 The requirements of subparts D, E, F, G, and J of this part establish response resource mobilization and response times. The location where the vessel operates farthest from the storage location of the response resources must be used to determine whether the resources are capable of arriving on scene within the time required. A vessel owner or operator must include the time for notification, mobilization, and travel time of resources identified to meet the maximum most probable discharge and Tier 1 worst case discharge requirements. For subparts D and E of this part, Tier 2 and 3 resources must be notified and mobilized as necessary to meet the requirements for arrival on scene. An on-water speed of 5 knots and a land speed of 35 miles per hour is assumed, unless the vessel owner or operator can demonstrate otherwise.

2.7 For subparts D, E, and J of this part, in identifying equipment, the vessel owner or operator must list the storage location, quantity, and manufacturer's make and model, unless the oil spill removal organization(s) providing the necessary response resources have been evaluated by the Coast Guard, and their capability has been determined to equal or exceed the response capability needed by the vessel. For oil recovery devices, the effective daily recovery capacity, as determined using section 6 of this appendix, must be included. For boom, the overall boom height (draft plus freeboard) must be included. A vessel owner or operator must ensure that identified boom has compatible connectors.

2.8 For subparts F and G of this part, in identifying equipment, the vessel owner or operator shall list the storage location, quantity, and manufacturer's make and model, unless the oil spill removal organization(s) providing the necessary response resources have been evaluated by the Coast Guard, and their capability has been determined to equal or exceed the response capability needed by the vessel. For boom, the overall boom height (draft plus freeboard) must be included. A vessel owner of operator

is responsible for ensuring that identified boom has compatible connectors.

3. Determining Response Resources Required for the Average Most Probable Discharge

3.1 A vessel owner or operator must identify and ensure, by contract or other approved means, that sufficient response resources are available to respond to the 50-barrel average most probable discharge at the point of an oil transfer involving a vessel that carries oil as a primary cargo or a nontank vessel carrying oil as cargo. The equipment must be designed to function in the operating environment at the point of oil transfer. These resources must include—

3.1.1 Containment boom in a quantity equal to twice the length of the largest vessel involved in the transfer capable of being deployed within 1 hour of the detection of a spill at the site of oil transfer operations. If the transfer operation is more than 12 miles from shore, the containment boom must be deployed within 1 hour plus the travel time from the nearest shoreline at a speed of 5 knots.

3.1.2 Oil recovery devices with an effective daily recovery capacity of 50 barrels or greater available at the transfer site within 2 hours of the detection of an oil discharge.

3.1.3 Oil storage capacity for recovered oily material indicated in section 9.2 of this appendix.

4. Determining Response Resources Required for the Maximum Most Probable Discharge

4.1 A vessel owner or operator shall identify and ensure, by contract or other approved means, that sufficient response resources are available to respond to discharges up to the maximum most probable discharge volume for that vessel. The resources should be capable of containing and collecting up to 2,500 barrels of oil. All equipment identified must be designed to operate in the applicable operating environment specified in table 1 of this appendix.

4.2 To determine the maximum most probable discharge volume to be used for planning, use the lesser of—

4.2.1 2500 barrels; or

4.2.2 Ten percent of the total oil capacity.

4.3 Oil recovery devices necessary to meet the applicable maximum most probable discharge volume planning criteria must be located such that they arrive on scene within 12 hours of the discovery of a discharge in higher volume port areas and the Great Lakes, 24 hours in all other rivers and canals, inland, nearshore, and offshore areas, and 24 hours plus travel time from shore in all open ocean areas.

4.3.1 Because rapid control, containment, and removal of oil is critical to reduce spill impact, the effective daily recovery capacity for oil recovery devices must equal 50% of the planning volume applicable for the vessel as determined in section 4.2 of this appendix. The effective daily recovery capacity for oil recovery devices identified in the plan must be determined using the criteria in section 6 of this appendix.

4.4 In addition to oil recovery capacity, the vessel owner or operator must identify in the response plan and ensure the availability of, through contract or other approved means, sufficient boom available within the required response times for oil connection and containment, and for protection of shoreline areas. While the regulation does not set required quantities of boom for oil collection and containment, the owner or operator of a vessel must still identify in a response plan and ensure, through contract or other approved means, the availability of the boom identified in the plan for this purpose.

4.5 The plan must indicate the availability of temporary storage capacity to meet the requirements of section 9.2 of this appendix. If available storage capacity is insufficient to meet this requirement, the effective daily recovery capacity must be downgraded to the limits of the available storage capacity.

4.6 The following is an example of a maximum most probable discharge volume planning calculation for equipment identification in a higher volume port area:

The vessel's cargo capacity is 10,000 barrels, thus the planning volume is 10 percent or 1,000 barrels. The effective daily recovery capacity must be 50 percent of the planning volume, for 500 barrels per day. The ability of oil recovery devices to meet this capacity will be calculated using the procedures in section 6 of this appendix. Temporary storage capacity available on scene must equal twice the daily recovery capacity as indicated in section 9 of this appendix, or 1000 barrels per day. This figure would represent the information the vessel owner or operator would use to identify and ensure the availability of, through contract or other approved means, the required response resources. The vessel owner would also need to identify how much boom was available for use.

5. Determining Response Resources Required for the Worst Case Discharge to the Maximum Extent Practicable

5.1 A vessel owner or operator, as applicable under the regulations prescribed in this part, must identify and ensure, by contract or other approved means, that sufficient response resources are available to respond to the worst case discharge of oil to the maximum extent practicable. Section 7 of this appendix describes the method to determine the required response resources.

5.2 Oil spill recovery devices identified to meet the applicable worst case discharge planning volume must be located such that

they can arrive at the scene of a discharge within the time specified for the applicable response tier listed in §§155.1050(g) and 155.5050(g).

5.3 The effective daily recovery capacity for oil recovery devices identified in a response plan must be determined using the criteria in section 6 of this appendix. A vessel owner or operator, as applicable under the regulations prescribed in this part, must identify the storage locations of all equipment that must be used to fulfill the requirements for each tier.

5.4 A vessel owner or operator, as applicable under the regulations prescribed in this part, must identify the availability of temporary storage capacity to meet the requirements of section 9.2 of this appendix. If available storage capacity is insufficient to meet this requirement, then the effective daily recovery capacity must be downgraded to the limits of the available storage capacity.

5.5 When selecting response resources necessary to meet the response plan requirements, the vessel owner or operator, as applicable under the regulations prescribed in this part, must ensure that a portion of those resources are capable of being used in close-to-shore response activities in shallow water. The following percentages of the on-water response equipment identified for the applicable geographic area must be capable of operating in waters of 6 feet or less depth:

(i) Open ocean—none.

(ii) Offshore—10 percent.

(iii) Nearshore, inland, Great Lakes, and rivers and canals—20 percent.

5.6 In addition to oil spill recovery devices and temporary storage capacity, a vessel owner or operator, as applicable under the regulations prescribed in this part, must identify in the response plan and ensure the availability of, through contract or other approved means, sufficient boom that can arrive on scene within the required response times for oil containment and collection. The specific quantity of boom required for collection and containment will depend on the specific recovery equipment and strategies employed. Table 2 of this appendix lists the minimum quantities of additional boom required for shoreline protection that a vessel owner or operator must identify in the response plan and ensure the availability of, through contract or other approved means.

5.7 A vessel owner or operator, as applicable under the regulations prescribed in this part, must also identify in the response plan and ensure, by contract or other approved means, the availability of an oil spill removal organization capable of responding to a shoreline cleanup operation involving the calculated volume of emulsified oil that might impact the affected shoreline. The volume of oil for which a vessel owner or operator should plan for should be calculated through the application of factors contained in Tables 3 and 4 of this appendix. The volume calculated from these tables is intended to assist the vessel owner or operator in identifying a contractor with sufficient resources. This planning volume is not used explicitly to determine a required amount of equipment and personnel.

6. Determining Effective Daily Recovery Capacity for Oil Recovery Devices

6.1 Oil recovery devices identified by a vessel owner or operator must be identified by manufacturer, model, and effective daily recovery capacity. These capacities must be to meet the applicable planning criteria for the average most probable discharge; maximum most probable discharge; and worst case discharge to the maximum extent practicable.

6.2 For the purposes of determining the effective daily recovery capacity of oil recovery devices, the following method will be used. This method considers potential limitations due to available daylight, weather, sea state, and percentage of emulsified oil in the recovered material. The Coast Guard may assign a lower efficiency factor to equipment listed in a response plan if it determines that such a reduction is warranted.

6.2.1 The following formula must be used to calculate the effective daily recovery capacity:

$$R=T\times 24\times E$$

R—Effective daily recovery capacity

T—Throughput rate in barrels per hour (nameplate capacity)

E—20% efficiency factor (or lower factor as determined by the Coast Guard)

6.2.2 For those devices in which the pump limits the throughput of liquid, throughput rate will be calculated using the pump capacity.

6.2.3 For belt or mop type devices, the throughput rate will be calculated using data provided by the manufacturer on the nameplate rated capacity for the device.

6.2.4 Vessel owners or operators including in the response plan oil recovery devices whose throughput is not measurable using a pump capacity or belt or mop capacity may provide information to support an alternative method of calculation. This information must be submitted following the procedures in section 6.5 of this appendix.

6.3 As an alternative to section 6.2 of this appendix, a vessel owner or operator may submit adequate evidence that a different effective daily recovery capacity should be applied for a specific oil recovery device. Adequate evidence is actual verified performance data in spill conditions or test using certain ASTM standards [ASTM F 631 (incorporated by reference, see §155.140) Standard Method for Testing Full Scale Advancing Spill Removal Devices], or an equivalent test approved by the Coast Guard.

6.3.1 The following formula must be used to calculate the effective daily recovery capacity under this alternative:

R=D×U

R—Effective daily recovery capacity

D—Average Oil Recovery Rate in barrels per hour (Item 13.2.16 in ASTM F 631; or actual performance data)

U—Hours per day that a vessel owner or operator can document capability to operate equipment under spill conditions. Ten hours per day must be used unless a vessel owner or operator can demonstrate that the recovery operation can be sustained for longer periods.

6.4 A vessel owner or operator submitting a response plan shall provide data that supports the effective daily recovery capacities for the oil recovery devices listed. The following is an example of these calculations:

A weir skimmer identified in a response plan has a manufacturer's rated throughput at the pump of 267 gallons per minute (gpm).

267 gpm=381 barrels per hour

R=381×24×.2=1,829 barrels per day

After testing using ASTM procedures, the skimmer's oil recovery rate is determined to be 220 gpm. The vessel owner or operator identifies sufficient resources available to support operations 12 hours per day.

220 gpm=314 barrels per hour

R=314×12=3,768 barrels per day

A vessel owner or operator will be able to use the higher capacity if sufficient temporary oil storage capacity is available.

6.5 Determinations of alternative efficiency factors under section 6.2 or alternative effective daily recovery capacities under section 6.3 of this appendix will be made by Commandant (CG–5431), Coast Guard Headquarters, 2100 2nd St.,SW., Stop 7581, Washington, DC 20593–7581 or *vrp@uscg.mil*. Oil spill removal organizations or equipment manufacturers may submit required information on behalf of multiple vessel owners or operators.

7. Calculating the Worst Case Discharge Planning Volumes

7.1 A vessel owner or operator, as applicable under the regulations prescribed in this part, must plan for a response to a vessel's worst case discharge oil planning volume. The planning for on-water recovery must take into account a loss of some oil to the environment due to evaporation and natural dissipation, potential increases in volume due to emulsification, and the potential for deposit of some oil on the shoreline.

7.2 The following procedures must be used to calculate the planning volume used by a vessel owner or operator, as applicable under the regulations prescribed in this part, for determining required on-water recovery capacity:

7.2.1 The following must be determined: the total volume of oil cargo carried; the appropriate cargo group for the type of petroleum oil carried [persistent (groups II, III, and IV) or non-persistent (group I)]; and the geographic area(s) in which the vessel operates. For vessels carrying mixed cargoes from different petroleum oil groups, each group must be calculated separately. This information is to be used with Table 3 of this appendix to determine the percentages of the total cargo volume to be used for removal capacity planning. This table divides the cargo volume into three categories: oil lost to the environment; oil deposited on the shoreline; and oil available for on-water recovery.

7.2.2 The on-water oil recovery volume must be adjusted using the appropriate emulsification factor found in Table 4 of this appendix.

7.2.3 The adjusted volume is multiplied by the on-water oil recovery resource mobilization factor found in Table 5 of this appendix from the appropriate operating area and response tier to determine the total on-water oil recovery capacity in barrels per day that must be identified or contracted for to arrive on scene within the applicable time for each response tier. Table 5 specifies three tiers. For higher volume port areas, the contracted tiers of resources must be located such that they can arrive on scene within 12, 36, and 60 hours of the discovery of an oil discharge. For the Great Lakes, these tiers are 18, 42, and 66 hours. For rivers and canals, inland, nearshore, and offshore, these tiers are 24, 48, and 72 hours. For the open ocean area, these tiers are 24, 48, and 72 hours with an additional travel time allowance of 1 hour for every additional 5 nautical miles from shore. For nontank vessels, only Tier 1 is specified.

7.2.4 The resulting on-water recovery capacity in barrels per day for each tier is used to identify response resources necessary to sustain operations in the applicable geographic area. The equipment must be capable of sustaining operations for the time period specified in Table 3 of this appendix. A vessel owner or operator, as applicable under the regulations prescribed in this part, must identify and ensure the availability of, through contract or other approved means, sufficient oil spill recovery devices to provide the effective daily oil recovery capacity required. If the required capacity exceeds the applicable cap described in Table 6 of this appendix, then a vessel owner or operator must contract only for the quantity of resources required to meet the cap, but must identify sources of additional resources as indicated in §155.1050(p). For a vessel that carries multiple groups of oil, the required effective daily recovery capacity for each group is calculated and summed before applying the cap.

7.3 The following procedures must be used to calculate the planning volume for identifying shoreline cleanup capacity:

7.3.1 The following must be determined: The total volume of oil carried; the appropriate group for the type of petroleum oil carried [persistent (groups II, III, and IV) or non-persistent (group I)]; and the geographic area(s) in which the vessel operates. For a vessel carrying different oil groups, each group must be calculated separately. Using this information, Table 3 of this appendix must be used to determine the percentages of the total oil volume to be used for shoreline cleanup resource planning.

7.3.2 The shoreline cleanup planning volume must be adjusted to reflect an emulsification factor using the same procedure as described in section 7.2.2 of this appendix.

7.3.3 The resulting volume will be used to identify an oil spill removal organization with the appropriate shoreline cleanup capability.

7.4 The following is an example of the procedure described above:

A vessel with a 100,000 barrel capacity for #6 oil (specific gravity .96) will move from a higher volume port area to another area. The vessel's route will be 70 miles from shore.

Cargo carried: 100,000 bbls. Group IV oil Emulsification factor (from Table 4 of this appendix): 1.4 Areas transited: Inland, Nearshore, Offshore, Open ocean

Planned % on-water recovery (from Table 3 of this appendix):

Inland 50%
Nearshore 50%
Offshore 40%
Open ocean 20%

Planned % oil onshore recovery (from Table 3 of this appendix):

Inland 70%
Nearshore 70%
Offshore 30%
Open ocean 30%

General formula to determine planning volume:

(planning volume)=(capacity)×(% from Table 3 of this appendix)×(emulsification factor from Table 4 of this appendix)

Planning volumes for on-water recovery:

Inland 100,000×.5×1.4=70,000 bbls
Nearshore 100,000×.5×1.4=70,000 bbls
Offshore 100,000×.4×1.4=56,000 bbls
Open ocean 100,000×.2×1.4=28,000 bbls

Planning volumes for on shore recovery:

Inland 100,000×.7×1.4=98,000 bbls
Nearshore 100,000×.7×1.4=98,000 bbls
Offshore 100,000×.3×1.4=42,000 bbls

The vessel owner or operator must contract with a response resource capable of managing a 98,000-barrel shoreline cleanup in those areas where the vessel comes closer than 50 miles to shore.

Determining required resources for on-water recovery for each tier using mobilization factors: (barrel per day on-water recovery requirements)=(on-water planning volume as calculated above)×(mobilization factor from Table 5 of this appendix).

		Tier 1	Tier 2	Tier 3
Inland/Nearshore 70,000	×	.15	.25	.40
Offshore 56,000	×	.10	.165	.21
Open ocean 28,000	×	.06	.10	.12
equals (barrels per day)				
Inland/Nearshore		10,500	17,500	28,000
Offshore		5,600	9,240	11,760
Open ocean		1,680	2,800	3,360

Since the requirements for Tier 1 for inland and nearshore exceed the caps, the vessel owner would only need to contract for 10,000 barrels per day for Tier 1. No additional equipment would be required to be identified because the required Tier 3 resources are below the Tier 3 caps.

10% of the on-water recovery capability for offshore, and 20% of the capability for inland/nearshore, for all tiers, must be capable of operating in water with a depth of 6 feet or less.

The vessel owner or operator would also be required to identify or contract for quantities of boom identified in Table 2 of this appendix for the areas in which the vessel operates.

8. Determining the Capability of High-Rate Response Methods

8.1 Calculate cumulative dispersant application capacity requirements as follows:

8.1.1 A vessel owner or operator, as applicable under the regulations prescribed in this part, must plan either for a dispersant capacity to respond to a vessel's worst case discharge of oil, or for the amount of the dispersant resource capability as required by §155.1050(k)(3) of this subchapter, whichever is the lesser amount. When planning for the cumulative application capacity that is required, the calculations should account for the loss of some oil to the environment due to natural dissipation causes (primarily evaporation). The following procedure should be used to determine the cumulative application requirements:

8.1.2 Determine the WCD volume of oil carried in gallons, and the appropriate oil group for the type of petroleum oil carried (Groups II, III, IV). For vessels carrying different oil groups, assume a WCD using the oil group that constitutes the largest portion of the oil being carried, or the oil group with the smallest natural dissipation factor;

8.1.3 Multiply the WCD in gallons by the natural dissipation factor for the appropriate oil group as follows: Group II factor is 0.50; Group III factor is 0.30; and Group IV factor is 0.10. This represents the amount of oil that can be expected to be lost to natural dissipation. Subtract the WCD lost to natural dissipation from the total oil amount carried to determine the remaining oil available for treatment by dispersant-application; and

8.1.4 Multiply the oil available for dispersant treatment by the dispersant to oil planning application ratio of 1 part dispersant to 20 parts oil (0.05). The resulting number represents the cumulative total dispersant-application capability that must be ensured available within the first 60 hours.

8.1.5(i) The following is an example of the procedure described in paragraphs 8.1.1 through 8.1.4 above: A vessel with a 1,000,000 gallons capacity of crude oil (specific gravity 0.87) will transit through an area with pre-authorization for dispersant use in the near-shore environment on the U.S. East Coast.

WCD: 1,000,000 gallons, Group III oil.

Natural Dissipation Factor for Group III: 30 percent.

General formula to determine oil available for dispersant treatment: ((WCD)—[(WCD) × (natural dissipation factor)] = available oil.

E.g., 1,000,000 gal − (1,000,000 gal × 0.30) = 700,000 gallons of available oil.

Cumulative application capacity = Available oil × planning application ratio (1 gal dispersant/20 gals oil = 0.05).

E.g., 700,000 gal oil × (0.05) = 35,000 gallons cumulative dispersant-application capacity.

(ii) The requirements for cumulative dispersant-application capacity (35,000) for this vessel's WCD is less than the overall dispersant capability cap for non-Gulf Coast waters required by §155.1050(k) of this chapter. Because paragraph 8.1.1 of this appendix requires owners and operators to ensure the availability of the lesser of a vessel's dispersant requirements for WCD or the amount of the dispersant cap provided for in §155.1050(k)(3), the vessel in this example would be required to ensure the availability of 35,000 gallons of dispersant. More specifically, this vessel would be required to meet the following tier requirements in §155.1050(k), which total 35,000 gallons application:

Tier—1 4,125 gallons—Completed in 12 hours.

Tier—2 23,375 gallons—Completed in 36 hours.

Tier—3 7,500 gallons—Completed in 60 hours.

8.2 Determining Effective Daily Application Capacities ''EDACs'' for dispersant response systems as follows:

8.2.1 EDAC planning estimates for compliance with the dispersant application requirements in §155.1050(k)(3) are to be based on:

8.2.1.1 The spill occurring at sites 50 nautical miles off shore furthest from the primary dispersant staging site(s);

8.2.1.2 Specific dispersant application platform operational characteristics identified in the Dispersant Mission Planner 2 or as demonstrated by operational tests;

8.2.1.3 Locations of primary dispersant staging sites; and

8.2.1.4 Locations and quantities of dispersant stockpiles.

8.2.2 EDAC calculations with supporting documentation must be submitted to the NSFCC for classification as a Dispersant Oil Spill Removal Organization.

8.2.3(i) EDAC can also be calculated using the Dispersant Mission Planner 2 (DMP2). The DMP2 is a downloadable application that calculates EDAC for different dispersant response systems. It is located on the Internet at: *http://www.response.restoration.noaa.gov/spilltools*

(ii) The DMP2 contains operating information for the vast majority of dispersant application platforms, to include aircraft, both rotary and fixed wing, and vessels. The DMP2 produces EDAC estimates by performing calculations that are based on performance parameters of dispersant application platforms, locations of primary dispersant staging sites, home based airport or port locations, and for planning purposes, a 50 mile from shore dispersant application site. The 50 mile offshore site used in the DMP2 would be the location furthest from the primary dispersant staging site identified in the vessel response plan.

8.2.4 For each Captain of the Port Zone where a dispersant response capability is required, the response plan must identify the following:

8.2.4.1 The type, number, and location of each dispersant application platform intended for use in meeting dispersant delivery requirements specified in §155.1050(k)(3) of this chapter;

8.2.4.2 The amount and location of available dispersant stockpiles to support each platform; and

8.2.4.3 A primary staging site for each platform that will serve as its base of operations for the duration of the response.

8.3 In addition to the equipment and supplies required, a vessel owner or operator must identify a source of support to conduct the monitoring and post-use effectiveness evaluation required by applicable Local and Area Contingency Plans.

8.4 Identification of the resources for dispersant application does not imply that the use of this technique will be authorized. Actual authorization for use during a spill response will be governed by the provisions of the National Oil and Hazardous Substances Contingency Plan (40 CFR part 300) and the applicable Local or Area Contingency Plan.

9. Additional Equipment Necessary To Sustain Response Operations

9.1 A vessel owner or operator is responsible for ensuring that sufficient numbers of trained personnel, boats, aerial spotting aircraft, sorbent materials, boom anchoring materials, and other resources are available to sustain response operations to completion. All such equipment must be suitable for use with the primary equipment identified in the response plan. A vessel owner or operator is not required to list these resources in the response plan, but shall certify their availability.

9.2 A vessel owner or operator shall evaluate the availability of adequate temporary storage capacity to sustain the effective daily recovery capacities from equipment identified in the plan. Because of the inefficiencies of oil spill recovery devices, response plans must identify daily storage capacity equivalent to twice the effective daily recovery capacity required on scene. This temporary storage capacity may be reduced if a vessel owner or operator can demonstrate by waste stream analysis that the efficiencies of the oil recovery devices, ability to decant water, or the availability of alternative temporary storage or disposal locations in the area(s) the vessel will operate will reduce the overall volume of oily material storage requirements.

9.3 A vessel owner or operator shall ensure that their planning includes the capability to arrange for disposal of recovered oil products. Specific disposal procedures will be addressed in the applicable Area Contingency Plan.

TABLE 1—RESPONSE RESOURCE OPERATING CRITERIA

[Oil Recovery Devices]

Operating Environment	Significant Wave Height [1] (feet)	Sea State
Rivers & Canals	≤1	1
Inland	≤3	2
Great Lakes	≤4	2–3
Ocean	≤6	3–4

[Boom]

Boom Property	Use			
	Rivers & Canals	Inland	Great Lakes	Ocean
Significant Wave [1] [2] Height (feet)	≤1	≤3	≤4	≤6
Sea State	1	2	2–3	3–4
Boom height—in. (draft plus freeboard)	6–18	18–42	18–42	≥42
Reserve Buoyancy to Weight Ratio	2:1	2:1	2:1	3:1 to 4:1
Total Tensile Strength—lbs.	4,500	15–20,000	15–20,000	>20,000
Skirt Fabric Tensile Strength—lbs.	200	300	300	500
Skirt Fabric Tear Strength—lbs.	100	100	100	125

[1] Oil recovery devices and boom must be at least capable of operating in wave heights up to and including the values listed in Table 1 for each operating environment.

[2] Equipment identified as capable of operating in waters of 6 feet or less depth are exempt from the significant wave height planning requirement.

TABLE 2—SHORELINE PROTECTION REQUIREMENTS

Location	Boom	Availability hours	
	Ensured by contract or other approved means (ft.)	Higher volume port area	Other areas
Persistent Oils			
Open Ocean	.....	.....	.....
Offshore	15,000	24	48
Nearshore/Inland/Great Lakes	30,000	12	24

TABLE 2—SHORELINE PROTECTION REQUIREMENTS—Continued

Location	Boom	Availability hours	
	Ensured by contract or other approved means (ft.)	Higher volume port area	Other areas
Rivers & Canals	25,000	12	24
Non-Persistent Oils			
Open Ocean	.....	.....	.....
Offshore	.....	.....	.....
Nearshore/Inland/Great Lakes	10,000	12	24
Rivers & Canals	15,000	12	24

Spill Location	Nearshore/Inland/ Great Lakes			River		
Sustainability of on–water oil recovery	4 days			3 days		
Oil Group	% Natural Dissipation	% Recovered Floating oil	% Oil on shore	% Natural Dissipation	% Recovered Floating oil	% Oil on shore
I Non–persistent oils	80	20	10	80	10	10
II Light crudes and fuels	50	50	30	40	15	45
III Medium crudes and fuels	30	50	50	20	15	65
IV Heavy crudes /residual fuels	10	50	70	5	20	75

Note: Percentage may not sum to 100; reflects enhanced on–water recovery capacity

Table 3 Removal Capacity Planning Table

Spill Location	Open ocean			Offshore		
Sustainability of on-water oil recovery	10 days			6 days		
Oil Group	% Natural Dissipation	% Recovered Floating oil	% Oil on shore	% Natural Dissipation	% Recovered Floating oil	% Oil on shore
I Non-persistent oils	100	/	/	95	[5]*	/
II Light crudes	90	10	/	75	25	5
III Medium crudes and fuels	75	20	[5]*	60	40	20
IV Heavy crudes /residual fuels	50	20	[30]*	50	40	30

* Included in table for continuity; no planning required.

Table 3 Removal Capacity Planning Table

TABLE 4—EMULSIFICATION FACTORS FOR PETROLEUM OIL CARGO GROUPS

Non-persistent oil 72 G:	
Group I	1.0
Persistent oil:	
Group II	1.8
Group III	2.0
Group IV	1.4

TABLE 5—ON-WATER OIL RECOVERY RESOURCE MOBILIZATION FACTORS

Area	Tier 1	Tier 2	Tier 3
Rivers and Canals	.30	.40	.60
Inland/Nearshore/Great Lakes	.15	.25	.40
Offshore	.10	.165	.21
Ocean	.06	.10	.12

Note: These mobilization factors are for total resources mobilized, not incremental resources.

TABLE 6—RESPONSE CAPABILITY CAPS BY GEOGRAPHIC AREA

	Tier 1	Tier 2	Tier 3
As of February 18, 1993:			
All except rivers & canals & Great Lakes	10K bbls/day	20K bbls/day	40K bbls/day.
Great Lakes	5K bbls/day	10K bbls/day	20K bbls/day.
Rivers & canals	1,500 bbls/day	3,000 bbls/day	6,000 bbls/day.
February 18, 1998:			
All except rivers & canals & Great Lakes	12.5K bbls/day	25K bbls/day	50K bbls/day.
Great Lakes	6.35K bbls/day	12.5K bbls/day	25K bbls/day.
Rivers & canals	1,875 bbls/day	3,750 bbls/day	7,500 bbls/day.
February 18, 2003			
All except rivers & canals & Great Lakes	12.5K bbls/day	25K bbls/day	50K bbls/day.
Great Lakes	6.25K bbls/day	12.3K bbls/day	25K bbls/day.
Rivers & canals	1,875 bbls/day	3,750 bbls/day	7,500 bbls/day.

Note: The caps show cumulative overall effective daily recovery capacity, not incremental increases.
K = Thousand
bbls = Barrels
TBD = To be determined

[CGD 91–034, 61 FR 1100, Jan. 12, 1996, as amended by CGD 96–026, 61 FR 33666, June 28, 1996; USCG–1999–5151, 64 FR 67176, Dec. 1, 1999; USCG–2005–21531, 70 FR 36349, June 23, 2005; USCG–2008–0179, 73 FR 35015, June 19, 2008; USCG–2001–8661, 74 FR 45029, Aug. 31, 2009; USCG–2010–0351, 75 FR 36285, June 25, 2010; USCG–2008–1070, 78 FR 60134, Sept. 30, 2013]

APPENDIX C TO PART 155—TRAINING ELEMENTS FOR OIL SPILL RESPONSE PLANS

1. General

1.1 The portion of the plan dealing with training is one of the key elements of a response plan. This concept is clearly expressed by the fact that Congress, in writing the Oil Pollution Act of 1990, specifically included training as one of the sections required in a vessel or facility response plan. In reviewing submitted response plans, it has been noted that the plans often do not provide sufficient information in the training section of the plan for either the user or the reviewer of the plan. In some cases, plans simply state that the crew and others will be training in their duties and responsibilities, with no other information being provided. In other plans, information is simply given that required parties will receive the necessary worker safety training (HAZWOPER).

1.2 The training section of the plan need not be a detailed course syllabus, but it must contain sufficient information to allow the user and reviewer (or evaluator) to have an understanding of those areas that are believed to be critical. Plans should identify key skill areas and the training that is required to ensure that the individual identified will be capable of performing the duties prescribed to them. It should also describe how the training will be delivered to the various personnel. Further, this section of the plan must work in harmony with those sections of the plan dealing with exercises, the spill management team, and the qualified individual.

1.3 The material in this appendix C is not all-inclusive and is provided for guidance only.

2. Elements To Be Addressed

2.1 To assist in the preparation of the training section of a vessel response plan, some of the key elements that should be addressed are indicated in the following sections. Again, while it is not necessary that the comprehensive training program for the company be included in the response plan, it is necessary for the plan to convey the elements that define the program as appropriate.

2.2 An effective spill response training program should consider and address the following:

2.2.1 Notification requirements and procedures.

2.2.2 Communication system(s) used for the notifications.

2.2.3 Procedures to mitigate or prevent any discharge or a substantial threat of a discharge of oil resulting from—

2.2.3.1 Operational activities associated with internal or external fuel and cargo transfers;

2.2.3.2 Grounding or stranding;

2.2.3.3 Collision;

2.2.3.4 Explosion or fire;

2.2.3.5 Hull failure;

2.2.3.6 Excessive list; or

2.2.3.7 Equipment failure.

2.2.4 Procedures and arrangements for emergency towing.

2.2.5 When performing shipboard mitigation measures—

2.2.5.1 Ship salvage procedures;

2.2.5.2 Damage stability; and

2.2.5.3 Hull stress considerations.

2.2.6 Procedures for transferring responsibility for direction of response activities from vessel and facility personnel to the spill management team.

2.2.7 Familiarity with the operational capabilities of the contracted oil spill removal organizations and the procedures to notify and activate such organizations.

2.2.8 Familiarity with the contracting and ordering procedures to acquire oil spill removal organization resources.

2.2.9 Familiarity with the Area Contingency Plans.

2.2.10 Familiarity with the organizational structures that will be used to manage the response actions.

2.2.11 Responsibilities and duties of the spill management team members in accordance with designated job responsibilities.

2.2.12 Responsibilities and authority of the qualified individual as described in the vessel response plan and company response organization.

2.2.13 Responsibilities of designated individuals to initiate a response and supervise shore-based response resources.

2.2.14 Actions to take, in accordance with designated job responsibilities, in the event of a transfer system leak, tank overflow, or suspected fuel or cargo tank or hull leak.

2.2.15 Information on the oil handled by the vessel or facility, including familiarity with—

2.2.15.1 Cargo material safety data sheets (including oil carried as fuel);

2.2.15.2 Chemical characteristics of all oils carried as fuel or cargo;

2.2.15.3 Special handling procedures for all oils carried as fuel or cargo;

2.2.15.4 Health and safety hazards associated with all oils carried as fuel or cargo; and

2.2.15.5 Spill and firefighting procedures for all oils carried as fuel or cargo.

2.2.16 Occupational Safety and Health Administration requirements for worker health and safety (29 CFR 1910.120).

3. Further Considerations

In drafting the training section of the response plan, some further considerations are noted below (these points are raised simply as a reminder):

3.1 The training program should focus on training provided to vessel personnel.

3.2 An organization is comprised of individuals, and a training program should be structured to recognize this fact by ensuring that training is tailored to the needs of the individuals involved in the program.

3.3 An owner or operator may identify equivalent work experience which fulfills specific training requirements.

3.4 The training program should include participation in periodic announced and unannounced exercises. This participation should approximate the actual roles and responsibilities of individuals as specified in the response plan.

3.5 Training should be conducted periodically to reinforce the required knowledge and to ensure an adequate degree of preparedness by individuals with responsibilities under the vessel response plan.

3.6 Training may be delivered via a number of different means; including classroom sessions, group discussions, video tapes, self study workbooks, resident training courses, on-the-job training, or other means as deemed appropriate to ensure proper instruction.

3.7 New employees should complete the training program prior to being assigned job responsibilities which require participation in emergency response situations.

4. Conclusion

The information in this appendix is only intended to assist response plan preparers in reviewing the content of and in modifying the training section of their response plans. It may be more comprehensive than is needed for some vessels and not comprehensive enough for others. The Coast Guard expects that plan preparers have determined the training needs of their organizations created by the development of the response plans and the actions identified as necessary to increase the preparedness of the company and its personnel to respond to actual or threatened discharges of oil from their vessels.

[CGD 91–034, 61 FR 1107, Jan. 12, 1996, as amended by USCG–2008–1070, 78 FR 60135, Sept. 30, 2013]

PART 156—OIL AND HAZARDOUS MATERIAL TRANSFER OPERATIONS

Subpart A—Oil and Hazardous Material Transfer Operations

Sec.

156.100 Applicability.

156.105 Definitions.
156.107 Alternatives.
156.110 Exemptions.
156.111 Incorporation by reference.
156.112 Suspension order.
156.113 Compliance with suspension order.
156.115 Person in charge: Limitations.
156.118 Advance notice of transfer.
156.120 Requirements for transfer.
156.125 Discharge cleanup.
156.130 Connection.
156.150 Declaration of inspection.
156.160 Supervision by person in charge.
156.170 Equipment tests and inspections.

Subpart B—Special Requirements for Lightering of Oil and Hazardous Material Cargoes

156.200 Applicability.
156.205 Definitions.
156.210 General.
156.215 Pre-arrival notices.
156.220 Reporting of incidents.
156.225 Designation of lightering zones.
156.230 Factors considered in designating lightering zones.

Subpart C—Lightering Zones and Operational Requirements for the Gulf of Mexico

156.300 Designated lightering zones.
156.310 Prohibited areas.
156.320 Maximum operating conditions.
156.330 Operations.

AUTHORITY: 33 U.S.C. 1225, 1231, 1321(j); 46 U.S.C. 3703, 3703a, 3715; E.O. 11735, 3 CFR 1971–1975 Comp., p. 793; Department of Homeland Security Delegation No. 0170.1.

Subpart A—Oil and Hazardous Material Transfer Operations

§ 156.100 Applicability.

This subpart applies to the transfer of oil or hazardous material on the navigable waters or contiguous zone of the United States to, from, or within each vessel with a capacity of 250 barrels or more; except that, this subpart does not apply to transfer operations within a public vessel.

[CGD 86–034, 55 FR 36255, Sept. 4, 1990]

§ 156.105 Definitions.

Except as specifically stated in a section, the definitions in § 154.105 of this chapter apply to this subpart.

[CGD 90–071a, 59 FR 53291, Oct. 21, 1994]

§ 156.107 Alternatives.

(a) The COTP may consider and approve alternative procedures, methods, or equipment standards to be used by a vessel or facility operator in lieu of any requirements in this part if:

(1) Compliance with the requirement is economically or physically impractical;

(2) The vessel or facility operator submits a written request for the alternative at least 30 days before operations under the alternative are proposed, unless the COTP authorizes a shorter time; and

(3) The alternative provides an equivalent level of safety and protection from pollution by oil or hazardous material, which is documented in the request.

(b) The COTP takes final approval or disapproval action on any alternative requested, in writing, within 30 days of receipt of the request.

[CGD 75–124, 45 FR 7177, Jan. 31, 1980, as amended by CGD 86–034, 55 FR 36255, Sept. 4, 1990]

§ 156.110 Exemptions.

(a) The Assistant Commandant for Marine Safety, Security and Environmental Protection, acting for the Commandant, may grant an exemption or partial exemption from compliance with any requirement in this part, and the District Commander may grant an exemption or partial exemption from compliance with any operating condition or requirement in subpart C of this part, if:

(1) The vessel or facility operator submits an application for exemption via the COTP at least 30 days before operations under the exemption are proposed, unless the COTP authorizes a shorter time; and

(2) It is determined, from the application, that:

(i) Compliance with a specific requirement is economically or physically impractical;

(ii) No alternative procedures, methods, or equipment standards exist that would provide an equivalent level of safety and protection from pollution by oil or hazardous material; and

(iii) The likelihood of oil or hazardous material being discharged as a result of the exemption is minimal.

(b) If requested, the applicant must submit any appropriate information, including an environmental and economic assessment of the effects of and reasons for the exemption and proposed procedures, methods or equipment standards.

(c) The exemption may specify the procedures, methods, or equipment standards that will apply.

(d) An exemption is granted or denied in writing. The decision of the Assistant Commandant for Marine Safety, Security and Environmental Protection is a final agency action.

[CGD 75–124, 45 FR 7177, Jan. 31, 1980, as amended by CGD 88–052, 53 FR 25122, July 1, 1988; CGD 86–034, 55 FR 36255, Sept. 4, 1990; CGD 93–081, 60 FR 45017, Aug. 29, 1995; CGD 96–026, 61 FR 33666, June 28, 1996; CGD 93–056, 61 FR 41461, Aug. 8, 1996; CGD0 97–023, 62 FR 33364, June 19, 1997; USCG–2002–12471, 67 FR 41333, June 18, 2002]

§ 156.111 Incorporation by reference.

(a) Certain material is incorporated by reference into this part with the approval of the Director of the Federal Register under 5 U.S.C. 552(a) and 1 CFR part 51. To enforce any edition other than that specified in paragraph (b) of this section, the Coast Guard must publish notice of the change in the FEDERAL REGISTER; and the material must be available to the public. All approved material is available for inspection at the U.S. Coast Guard, Office of Compliance (CG–543), 2100 2nd St. SW., Stop 7581, Washington, DC 20593–7581 and at the National Archives and Records Administration (NARA). For information on the availability of this material at NARA, call 202–741–6030, or go to: *http://www.archives.gov/federal_register/code_of_federal_regulations/ibr_locations.html*. All approved material is available from the sources indicated in paragraph (b) of this section.

(b) The material approved for incorporation by reference in this part and the sections affected are as follows:

Oil Companies International Marine Forum (OCIMF)

15th Floor, 96 Victoria Street, London SW1E 5JW, England.

Ship to Ship Transfer Guide (Petroleum), Second Edition, 1988—156.330.

International Chamber of Shipping

12 Carthusian Street, London EC1M 6EB, England.

Guide to Helicopter/Ship Operations, Third Edition, 1989—156.330.

[CGD 93–081, 60 FR 45017, Aug. 29, 1995, as amended by CGD 96–026, 61 FR 33666, June 28, 1996; 69 FR 18803, Apr. 9, 2004; USCG–2008–0179, 73 FR 35015, June 19, 2008; USCG–2010–0351, 75 FR 36285, June 25, 2010]

§ 156.112 Suspension order.

The COTP or OCMI may issue a suspension order to suspend transfer operations to the vessel or facility operator when the COTP or OCMI finds there is a condition requiring action to prevent the discharge or threat of discharge of oil or hazardous material, or when the COTP or OCMI is unable to verify compliance with the regulations through an inspection. A suspension order:

(a) May be effective immediately;

(b) Is issued in writing unless it is effective immediately and then it may be issued orally and followed up in writing;

(c) Includes a statement of each condition requiring correction to—

(1) Prevent the discharge of oil or hazardous material; or

(2) Comply with § 154.735 of this chapter; and

(d) Is withdrawn when the COTP, OCMI, or District Commander, as applicable, determines that the condition requiring action to prevent the discharge or threat of discharge of oil or hazardous material has been corrected or no longer exists.

[CGD 75–124, 45 FR 7177, Jan. 31, 1980, as amended by CGD 86–034, 55 FR 36255, Sept. 4, 1990]

§ 156.113 Compliance with suspension order.

(a) No vessel or facility operator to whom a suspension order has been issued may conduct transfer operations from the time the order is effective until that order is withdrawn by the applicable COTP, OCMI, or by the District Commander.

(b) The vessel or facility operator may request reconsideration of the suspension order either orally or in writing to the COTP or OCMI who issued it. The request may contain supporting

documentation and evidence that the vessel or facility operator wishes to have considered.

(c) Any person not satisfied with a ruling made under the procedure contained in paragraph (b) of this section may appeal that ruling in writing, except as allowed under paragraph (e) of this section, to the Coast Guard District Commander of the district in which the suspension order was issued. The appeal may contain supporting documentation and evidence that the appellant wishes to have considered. The appeal does not stay the effect of the suspension order while the COTP or OCMI ruling is being reviewed. The District Commander issues a ruling after reviewing the appeal.

(d) The ruling by the District Commander is final agency action.

(e) If the delay in presenting a written appeal under paragraph (c) of this section would have a significant adverse impact on the appellant, the appeal may initially be presented orally. If an initial presentation of the appeal is made orally, the appellant must submit the appeal in writing within five days of the oral presentation to the District Commander to whom the oral appeal was made, containing, at a minimum the basis for the appeal and a summary of the material presented orally.

[CGD 75–124, 45 FR 7177, Jan. 31, 1980, as amended by CGD 86–034, 55 FR 36255, Sept. 4, 1990]

§ 156.115 Person in charge: Limitations.

(a) No person may serve as the person in charge of transfer operations on more than one vessel at a time during transfers between vessels or between two or more vessels and a facility unless authorized by the COTP.

(b) No person may serve as the person in charge of both a vessel and a facility during transfer operations unless authorized by the COTP.

[CGD 75–124, 45 FR 7177, Jan. 31, 1980, as amended by CGD 86–034, 55 FR 36255, Sept. 4, 1990]

§ 156.118 Advance notice of transfer.

(a) The COTP may require a facility operator to notify the COTP of the time and place of each transfer operation at least 4 hours before it begins for facilities that:

(1) Are mobile;

(2) Are in a remote location;

(3) Have a prior history of oil or hazardous material spills; or

(4) Conduct infrequent transfer operations.

(b) In the case of a vessel to vessel transfer, the COTP may require a vessel operator of a lightering or fueling vessel to notify the COTP of the time and place of each transfer operation, as specified by the COTP, at least 4 hours before it begins.

(c) No person may conduct such transfer operations until advance notice has been given as specified by the COTP.

NOTE: The notification may be accomplished by submitting a written schedule, periodically updated to be current.

[CGD 75–124, 45 FR 7177, Jan. 31, 1980, as amended by CGD 86–034, 55 FR 36255, Sept. 4, 1990]

§ 156.120 Requirements for transfer.

A transfer is considered to begin when the person in charge on the transferring vessel or facility and the person in charge on the receiving facility or vessel first meet to begin completing the declaration of inspection, as required by § 156.150 of this part. No person shall conduct an oil or hazardous material transfer operation unless:

(a) The vessel's moorings are strong enough to hold during all expected conditions of surge, current, and weather and are long enough to allow adjustment for changes in draft, drift, and tide during the transfer operation;

(b) Transfer hoses and loading arms are long enough to allow the vessel to move to the limits of its moorings without placing strain on the hose, loading arm, or transfer piping system;

(c) Each hose is supported to prevent kinking or other damage to the hose and strain on its coupling.

(d) Each part of the transfer system is aligned to allow the flow of oil or hazardous material;

(e) Each part of the transfer system not necessary for the transfer operation is securely blanked or shut off;

(f) The end of each hose and loading arm that is not connected for the

transfer of oil or hazardous material is blanked off using the closure devices required by §§ 154.520 and 155.805 of this chapter;

(g) The transfer system is attached to a fixed connection on the vessel and the facility except that when a vessel is receiving fuel, an automatic back pressure shutoff nozzle may be used;

(h) Each overboard discharge or sea suction valve that is connected to the vessel's transfer or cargo tank system is sealed or lashed in the closed position; except when used to receive or discharge ballast in compliance with 33 CFR Part 157;

(i) Each transfer hose has no unrepaired loose covers, kinks, bulges, soft spots, or any other defect which would permit the discharge of oil or hazardous material through the hose material and no gouges, cuts, or slashes that penetrate the first layer of hose reinforcement (''reinforcement'' means the strength members of the hose, consisting of fabric, cord and/or metal);

(j) Each hose or loading arm in use meets §§ 154.500 and 154.510 of this chapter, respectively;

(k) Each connection meets § 156.130;

(l) Any monitoring devices required by § 154.525 of this chapter are installed and operating properly;

(m) The discharge containment equipment required by § 154.545 of this chapter is readily accessible or deployed as applicable;

(n) The discharge containment required by §§ 154.530, 155.310, and 155.320 of this chapter, as applicable, is in place and periodically drained to provide the required capacity;

(o) Each drain and scupper is closed by the mechanical means required by § 155.310;

(p) All connections in the transfer system are leak free except that a component in the transfer system, such as the packing glands of a pump, may leak at a rate that does not exceed the capacity of the discharge containment provided during the transfer operation;

(q) The communications required by §§ 154.560 and 155.785 of this chapter are operable for the transfer operation;

(r) The emergency means of shutdown required by §§ 154.550 and 155.780 of this chapter, as applicable, is in position and operable;

(s) There is a person in charge on the transferring vessel or facility and the receiving vessel or facility except as otherwise authorized under § 156.115;

(t) Each person in charge required by paragraph (s) of this section:

(1) Is at the site of the transfer operation and immediately available to the transfer personnel;

(2) Has in his or her possession a copy of the facility operations manual or vessel transfer procedures, as appropriate; and

(3) Conducts the transfer operation in accordance with the facility operations manual or vessel transfer procedures, as appropriate;

(u) The personnel required, under the facility operations manual and the vessel transfer procedures, to conduct the transfer operation:

(1) Are on duty; and

(2) Conduct the transfer operation in accordance with the facility operations manual or vessel transfer procedures, as appropriate;

(v) At least one person is at the site of the transfer operation who fluently speaks the language or languages spoken by both persons in charge;

(w) The person in charge of the transfer on the transferring vessel or facility and the person in charge of it on the receiving vessel or facility have held a conference, to ensure that each person in charge understands—

(1) The identity of the product to be transferred;

(2) The sequence of transfer operations;

(3) The transfer rate;

(4) The name or title and location of each person participating in the transfer operation;

(5) Details of the transferring and receiving systems including procedures to ensure that the transfer pressure does not exceed the maximum allowable working pressure (MAWP) for each hose assembly, loading arm and/or transfer pipe system;

(6) Critical stages of the transfer operation;

(7) Federal, state, and local rules that apply to the transfer of oil or hazardous material;

(8) Emergency procedures;

(9) Discharge containment procedures;

(10) Discharge reporting procedures;

(11) Watch or shift arrangement;

(12) Transfer shutdown procedures; and,

(13) If the persons use radios, a predetermined frequency for communications during the transfer, agreed upon by both.

(x) The person in charge of transfer operations on the transferring vessel or facility and the person in charge of transfer operations on the receiving vessel or facility agree to begin the transfer operation;

(y) Between sunset and sunrise the lighting required by §§154.570 and 155.790 of this chapter is provided; and

(z) For transfer operations between tank barges from sunset to sunrise, lighting is provided as described in §155.790 of this chapter.

(aa) A transfer operation which includes collection of vapor emitted to or from a vessel's cargo tanks through a vapor control system (VCS) not located on the vessel must have the following verified by the person in charge:

(1) Each manual valve in the vapor collection system is correctly positioned to allow the collection of cargo vapor;

(2) A vapor collection hose or arm is connected to the vessel's vapor connection;

(3) The electrical insulating device required by §154.810(g) of this chapter or 46 CFR 39.40–3(c) is fitted between the facility vapor connection and the vessel vapor connection;

(4) The initial transfer rate and the maximum transfer rate are determined;

(5) The maximum and minimum operating pressures at the facility vapor connection are determined;

(6) The tank barge overfill control system, if installed, is connected to the facility, tested, and operating properly;

(7) The following have been performed not more than 24 hours prior to the start of the transfer operation or in accordance with 33 CFR 154.2150(b):

(i) Each alarm and automatic shutdown system required by subpart E of part 154 of this chapter and 46 CFR part 39 has been tested and found to be operating properly, and

(ii) Analyzers required by 33 CFR 154.2105(a) and (j) and 154.2107(d) and (e) or 46 CFR 39.40–3(a) have been checked for calibration by use of a span gas;

(8) Each vapor recovery hose has no unrepaired loose covers, kinks, bulges, soft spots, or any other defect which would permit the discharge of vapor through the hose material, and no external gouges, cuts, or slashes that penetrate the first layer of hose reinforcement; and

(9) The oxygen content in the vapor space of each of the vessel's cargo tanks connected to the vapor collection system, if inerted, is—

(i) At or below 60 percent by volume of the cargo's minimum oxygen concentration for combustion; or

(ii) At or below 8 percent by volume, at the start of cargo transfer, for vapor of crude oil, gasoline blends, or benzene;

(10) The freezing point of each cargo has been determined. If there is a possibility that the ambient air temperature during transfer operations will be at or below the freezing point of the cargo, adequate precautions have been taken to prevent freezing of vapor or condensate, or to detect and remove the liquid condensate and solids to prevent accumulation;

(11) If the cargo has the potential to polymerize, adequate precautions have been taken to prevent and detect polymerization of the cargo vapors; and

(12) The VCS has been cleaned, in accordance with 33 CFR 154.2150(p), between transfers of incompatible cargoes.

(bb) If the transfer operation involves loading oil, as defined in §151.05 of this chapter, into a cargo tank, the overfill device required by §155.480 of this chapter is installed and operating properly.

(cc) Smoking is not permitted in the facilities marine transfer area except in designated smoking areas.

(dd) Welding, hot work operations and smoking are prohibited on vessels during the transfer of flammable or combustible materials, except that

smoking may be permitted in accommodation areas designated by the master.

(Approved by the Office of Management and Budget under control number 1625–0039)

[CGD 75–124, 45 FR 7177, Jan. 31, 1980, as amended by CGD 88–102, 55 FR 25445, June 21, 1990; CGD 86–034, 55 FR 36255, Sept. 4, 1990; CGD 90–071a, 59 FR 53291, Oct. 21, 1994; CGD 93–056, 61 FR 41461, Aug. 8, 1996; CGD 79–116, 62 FR 25127, May 8, 1997; USCG–2001–9046, 67 FR 58524, Sept. 17, 2002; USCG–2006–25150, 71 FR 39210, July 12, 2006; 73 FR 79316, Dec. 29, 2008; USCG–1999–5150, 78 FR 42641, July 16, 2013]

§ 156.125 Discharge cleanup.

(a) Each person conducting the transfer operation shall stop the transfer operation whenever oil or hazardous material from any source is discharged:

(1) In the transfer operation work area; or

(2) Into the water or upon the adjoining shoreline in the transfer area.

(b) Except as permitted under paragraph (c) of this section, no person may resume the transfer operation after it has been stopped under paragraph (a) of this section, unless:

(1) Oil or hazardous material discharged in the transfer operation work area is cleaned up; and

(2) Oil or hazardous material discharged into the water or upon the adjoining shoreline is cleaned up, or is contained and being cleaned up.

(c) The COTP may authorize resuming the transfer operation if it is deemed appropriate.

[CGD 75–124, 45 FR 7177, Jan. 31, 1980, as amended by CGD 86–034, 55 FR 36255, Sept. 4, 1990]

§ 156.130 Connection.

(a) Each person who makes a connection for transfer operations shall:

(1) Use suitable material in joints and couplings to ensure a leak-free seal;

(2) Use a bolt in at least every other hole, and in no case less than four bolts, in each temporary bolted connection that uses a flange that meets American National Standards Institute (ANSI) standard flange requirements under § 154.500(d)(2) of this chapter;

(3) Use a bolt in each hole in each temporary bolted connection that uses a flange other than one that meets ANSI standards;

(4) Use a bolt in each hole of each permanently connected flange;

(5) Use bolts of the correct size in each bolted connection; and

(6) Tighten each bolt and nut uniformly to distribute the load and sufficiently to ensure a leak free seal.

(b) A person who makes a connection for transfer operations must not use any bolt that shows signs of strain or is elongated or deteriorated.

(c) Except as provided in paragraph (d) of this section, no person may use a connection for transfer operations unless it is:

(1) A bolted or full threaded connection; or

(2) A quick-connect coupling acceptable to the Commandant.

(d) No person may transfer oil or hazardous material to a vessel that has a fill pipe for which containment cannot practically be provided unless an automatic back pressure shutoff nozzle is used.

[CGD 75–124, 45 FR 7177, Jan. 31, 1980, as amended by CGD 86–034, 55 FR 36256, Sept. 4, 1990]

§ 156.150 Declaration of inspection.

(a) No person may transfer oil or hazardous material to or from a vessel unless each person in charge, designated under §§ 154.710 and 155.700 of this chapter, has filled out and signed the declaration of inspection form described in paragraph (c) of this section.

(b) No person in charge may sign the declaration of inspection unless he or she has determined by inspection, and indicated by initialling in the appropriate space on the declaration of inspection form, that the facility or vessel, as appropriate, meets § 156.120.

(c) The declaration of inspection may be in any form but must contain at least:

(1) The name or other identification of the transferring vessel or facility and the receiving vessel or facility;

(2) The address of the facility or location of the transfer operation if not at a facility;

(3) The date and time the transfer operation is started;

(4) A list of the requirements in § 156.120 with spaces on the form following each requirement for the person in charge of the vessel or facility to indicate by initialling that the requirement is met for the transfer operation; and

(5) A space for the date, time of signing, signature, and title of each person in charge during transfer operations on the transferring vessel or facility and a space for the date, time of signing, signature, and title of each person in charge during transfer operations on the receiving facility or vessel certifying that all tests and inspections have been completed and that they are both ready to begin transferring product; and

(6) The date and time the transfer operation is completed.

(d) The form for the declaration of inspection may incorporate the declaration-of-inspection requirements under 46 CFR 35.35–30.

(e) The vessel and facility persons in charge shall each have a signed copy of the declaration of inspection available for inspection by the COTP during the transfer operation.

(f) The operators of each vessel and facility engaged in the transfer operation shall retain a signed copy of the declaration of inspection on board the vessel or at the facility for at least 1 month from the date of signature.

[CGD 75–124, 45 FR 7177, Jan. 31, 1980, as amended by CGD 86–034, 55 FR 36256, Sept. 4, 1990; CGD 93–056, 61 FR 41461, Aug. 8, 1996]

§ 156.160 Supervision by person in charge.

(a) No person may connect or disconnect a hose, top off a tank, or engage in any other critical procedures during the transfer operation unless the person in charge, required by § 156.120(s), supervises that procedure.

(b) No person may start the flow of oil or hazardous material to or from a vessel unless instructed to do so by either person in charge.

(c) No person may transfer oil or hazardous material to or from a vessel unless each person in charge is in the immediate vicinity and immediately available to the transfer personnel.

[CGD 75–124, 45 FR 7177, Jan. 31, 1980, as amended by CGD 86–034, 55 FR 36256, Sept. 4, 1990]

§ 156.170 Equipment tests and inspections.

(a) Except as provided in paragraph (d) of this section, no person may use any equipment listed in paragraph (c) of this section for transfer operations unless the vessel or facility operator, as appropriate, tests and inspects the equipment in accordance with paragraphs (b), (c) and (f) of this section and the equipment is in the condition specified in paragraph (c) of this section.

(b) During any test or inspection required by this section, the entire external surface of the hose must be accessible.

(c) For the purpose of paragraph (a) of this section:

(1) Each nonmetallic transfer hose must:

(i) Have no unrepaired loose covers, kinks, bulges, soft spots or any other defect which would permit the discharge of oil or hazardous material through the hose material, and no gouges, cuts or slashes that penetrate the first layer of hose reinforcement as defined in § 156.120(i).

(ii) Have no external deterioration and, to the extent internal inspection is possible with both ends of the hose open, no internal deterioration;

(iii) Not burst, bulge, leak, or abnormally distort under static liquid pressure at least 1½ times the maximum allowable working pressure; and

(iv) Hoses not meeting the requirements of paragraph (c)(1)(i) of this section may be acceptable after a static liquid pressure test is successfully completed in the presence of the COTP. The test medium is not required to be water.

(2) Each transfer system relief valve must open at or below the pressure at which it is set to open;

(3) Each pressure gauge must show pressure within 10 percent of the actual pressure;

(4) Each loading arm and each transfer pipe system, including each metallic hose, must not leak under static liquid pressure at least 1½ times the maximum allowable working pressure; and

(5) Each item of remote operating or indicating equipment, such as a remotely operated valve, tank level alarm, or emergency shutdown device, must perform its intended function.

(d) No person may use any hose in underwater service for transfer operations unless the operator of the vessel or facility has tested and inspected it in accordance with paragraph (c)(1) or (c)(4) of this section, as applicable.

(e) The test fluid used for the testing required by this section is limited to liquids that are compatible with the hose tube as recommended by the hose manufacturer.

(f) The frequency of the tests and inspections required by this section must be:

(1) For facilities, annually or not less than 30 days prior to the first transfer conducted past one year from the date of the last tests and inspections;

(2) For a facility in caretaker status, not less than 30 days prior to the first transfer after the facility is removed from caretaker status; and

(3) For vessels, annually or as part of the biennial and mid-period inspections.

(g) If a facility or vessel collects vapor emitted to or from a vessel cargo tank with a vapor control system, the system must not be used unless the following tests and inspections are satisfactorily completed:

(1) Each vapor hose, vapor collection arm, pressure or vacuum relief valve, and pressure sensor is tested and inspected in accordance with paragraphs (b), (c), and (f) of this section;

(2) Each remote operating or indicating device is tested for proper operation in accordance with paragraph (f) of this section;

(3) Each detonation arrester required by 33 CFR 154.2105, 154.2108(b), 154.2109, 154.2110, 154.2111, and 154.2204, or 46 CFR 39.4003, and each flame arrester required by 33 CFR 154.2103, 154.2105(j), and 154.2203 has been inspected internally within the last year, or sooner if operational experience has shown that frequent clogging or rapid deterioration is likely; and

(4) Each hydrocarbon and oxygen analyzer required by 33 CFR 154.2105(a) and (j), 154.2107(d) and (e), and 154.2110 or 46 CFR 39.4003 is calibrated:

(i) Within the previous two weeks, or

(ii) Within 24 hours prior to operation when the vapor control system is operated less frequently than once a week.

(h) Upon the request of the owner or operator, the COTP may approve alternative methods of compliance to the testing requirements of paragraph (c) of this section if the COTP determines that the alternative methods provide an equal level of protection.

(i) Notwithstanding the general provisions of 33 CFR 156.107(a) relating to the authority of the Captain of the Port to approve alternatives, the owner or operator may request the written approval of the Commandant (CG–ENG), U.S. Coast Guard, 2100 2nd St. SW., Stop 7126, Washington, DC 20593–7126, for alternative methods of compliance to the testing and inspection requirements of paragraph (g)(3) of this section. The Commandant (CG–ENG) will grant that written approval upon determination that the alternative methods provide an equivalent level of safety and protection from fire, explosion, and detonation. Criteria to consider when evaluating requests for alternative methods may include, but are not limited to: operating and inspection history, type of equipment, new technology, and site-specific conditions that support the requested alternative.

(Approved by the Office of Management and Budget under control number 1625–0095)

[CGD 75–124, 45 FR 7177, Jan. 31, 1980, as amended by CGD 88–102, 55 FR 25445, June 21, 1990; CGD 86–034, 55 FR 36256, Sept. 4, 1990; CGD 93–056, 61 FR 41461, Aug. 8, 1996; USCG–2006–25150, 71 FR 39210, July 12, 2006; USCG–1999–5150, 78 FR 42641, July 16, 2013]

Subpart B—Special Requirements for Lightering of Oil and Hazardous Material Cargoes

SOURCE: CGD 78–180, 49 FR 11172, Mar. 26, 1984, unless otherwise noted.

§ 156.200 Applicability.

This subpart applies to each vessel to be lightered and each service vessel engaged in a lightering operation in the marine environment beyond the baseline from which the territorial sea is measured when the oil or hazardous material lightered is destined for a port or place subject to the jurisdiction of the U.S. This subpart does not apply to lightering operations involving public vessels, or to the dedicated response vessels and vessels of opportunity in accordance with the National Contingency Plan (40 CFR parts 9 and 300) when conducting response activities. These rules are in addition to the rules of subpart A of this part, as well as the rules in the applicable sections of parts 151, 153, 155, 156, and 157 of this chapter.

[CGD 93–081, 60 FR 45017, Aug. 29, 1995]

§ 156.205 Definitions.

(a) In addition to the terms defined in this section, the definitions in § 154.105 of this chapter apply to this subpart and to subpart C.

(b) As used in this subpart and subpart C:

Lightering or *Lightering operation* means the transfer of a cargo of oil or a hazardous material in bulk from one vessel to another, including all phases of the operation from the beginning of the mooring operation to the departure of the service vessel from the vessel to be lightered, except when that cargo is intended only for use as fuel or lubricant aboard the receiving vessel.

Marine environment means—

(1) The navigable waters of the United States;

(2) The waters of an area over which the United States asserts exclusive fishery management authority; and

(3) The waters superadjacent to the Outer Continental Shelf of the United States.

Service vessel means the vessel which receives a cargo of oil or a hazardous material from another vessel in a lightering operation.

Vessel to be lightered means the vessel which transports a cargo of oil or a hazardous material to a place within the marine environment for transfer of that cargo to another vessel for further transport to a port or place subject to the jurisdiction of the United States. The term ''vessel to be lightered'' does not include drilling rigs, or offshore supply vessels transferring cargo intended for use as fuel or lubricant aboard the receiving vessel.

Work includes any administrative duties associated with the vessel whether performed on board the vessel or onshore.

[CGD 78–180, 49 FR 11172, Mar. 26, 1984, as amended by CGD 86–034, 55 FR 36256, Sept. 4, 1990; CGD 90–052, 58 FR 48436, Sept. 15, 1993; CGD 93–081, 60 FR 45017, Aug. 29, 1995]

§ 156.210 General.

(a) No vessel may transfer oil or hazardous materials in a port or place subject to the jurisdiction of the United States, if the cargo has been lightered from another vessel, unless:

(1) The regulations in this subpart have been complied with;

(2) Both the vessel to be lightered and service vessel have, on board, at the time of transfer, a valid Certificate of Inspection, Certificate of Compliance, or a Tank Vessel Examination Letter, as would have been required under 46 U.S.C. 3710 or 3711, had the transfer taken place in a port or place subject to the jurisdiction of the United States;

(3) The delivering and receiving vessels have on board at the time of transfer, evidence that each vessel is operating in compliance with section 311(j) of the Federal Water Pollution Control Act (33 U.S.C. 1321(j)) and applicable regulations issued under the authority of section 311(j) in the form of a Declaration of Inspection as required by § 156.150 and a vessel response plan if required under part 155 of this chapter; and

NOTE: Under 46 U.S.C. 3715, the delivering and receiving vessels must have on board at the time of transfer, a Certificate of Financial Responsibility that would be required if the transfer had taken place in a location subject to the jurisdiction of the U.S. Regulations concerning Certificates of Financial Responsibility for vessels using the navigable waters of the U.S. are in part 130 of this chapter.

(4) The vessel to be lightered has on board, at the time of transfer, an International Oil Pollution Prevention

(IOPP) Certificate or equivalent documentation of compliance with Annex I of the International Convention for the Prevention of Pollution from Ships, 1973, as modified by the Protocol of 1978 relating thereto (MARPOL 73/78), as would be required by part 151 of this chapter for vessels in navigable waters of the United States. The IOPP Certificate or documentation of compliance shall be that prescribed by §§ 151.19 and 151.21 of this chapter, and shall be effective under the same timetable as specified in § 151.19.

(b) Lightering operations involving hazardous materials, other than oil, may be conducted only with the specific approval of the Commandant. A request to lighter hazardous materials, other than oil, must be submitted to Commandant (CG–5) prior to the planned beginning of lightering operations. The request must include the information described in § 156.215(a) to the extent known, for the initial transfer, and the estimated frequency of subsequent lightering operations. After the entry into force of Annex II to MARPOL 73/78, vessels lightering hazardous materials shall carry an International Pollution Prevention Certificate for the Carriage of Noxious Liquid Substances in Bulk (1973), if required by Annex II to MARPOL 73/78, or equivalent documentation of compliance with the annex.

(c) In an emergency, the COTP, upon request, may authorize a deviation from any rule in this part if the COTP determines that its application will endanger persons, property, or the environment.

(d) On vessels conducting lightering operations in a designated lightering zone, an officer or seaman may not work, except in an emergency or a drill, more than 15 hours in any 24-hour period, or more than 36 hours in any 72-hour period, including the 24-hour and 72-hour periods prior to commencing lightering operations.

[CGD 78–180, 49 FR 11172, Mar. 29, 1984, as amended by CGD 88–052, 53 FR 25122, July 1, 1988; CGD 90–052, 58 FR 48436, Sept. 15, 1993; CGD 93–081, 60 FR 45017, Aug. 29, 1995; USCG–2002–12471, 67 FR 41333, June 18, 2002; USCG–2006–24371, 74 FR 11212, Mar. 16, 2009; USCG–2010–0351, 75 FR 36285, June 25, 2010]

§ 156.215 Pre-arrival notices.

(a) The master, owner or agent of each vessel to be lightered must give at least 24 hours advance notice to the Captain of the Port nearest the lightering location or zone, prior to arrival in the lightering location or zone. This advance notice must include:

(1) The vessel's name, call sign or official number, and registry:

(2) The cargo type (if oil) or shipping name (if hazardous material) and approximate amount on board;

(3) The number of transfers expected and the amount of cargo expected to be transferred during each transfer;

(4) The lightering location or zone to be used;

(5) The estimated time of arrival in the lightering location or zone;

(6) The estimated duration of transfer operations; and

(7) The name and destination of service vessel(s).

(b) In the event the estimated time of arrival in the lightering location or zone changes by more than six hours, the Master, owner or agent of each vessel to be lightered must advise the Captain of the Port of this change as soon as possible.

(c) Where lightering is conducted as a result of collision, grounding, tank rupture or any similar emergency, immediate notice must be given to the Captain of the Port.

(d) In addition to the other requirements in this section, the master, owner, or agent of a vessel that requires a Tank Vessel Examination (TVE) or other special Coast Guard inspection in order to lighter in a designated lightering zone must request the TVE or other inspection from the cognizant Captain of the Port at least 72 hours prior to commencement of lightering operations.

[CGD 78–180, 49 FR 11172, Mar. 26, 1984, as amended by CGD 90–052, 58 FR 48437, Sept. 15, 1993; CGD 93–081, 60 FR 45017, Aug. 29, 1995]

§ 156.220 Reporting of incidents.

(a) An immediate report must be made to the nearest Captain of the Port, by the service vessel, if fire, explosion, collision, grounding or any similar emergency, which poses a threat to the vessels involved, occurs during lightering.

(b) Any discharge of oil or hazardous material into the water shall be reported, by the service vessel, in accordance with the procedures specified in § 151.15 of this chapter.

§ 156.225 Designation of lightering zones.

The District Commander is delegated the authority to designate lightering zones and their operating requirements, where they are necessary for safety or environmental protection. When a lightering zone has been designated, lightering operations in a given geographic area may only be conducted within the designated lightering zone.

§ 156.230 Factors considered in designating lightering zones.

The following factors are considered in designating a lightering zone:

(a) The findings of the environmental analysis or, if prepared, the Environmental Impact Statement;

(b) The proximity of the zone to:

(1) Shipping lanes;

(2) Vessel traffic schemes or vessel separation systems;

(3) Anchorages;

(4) Fixed structures;

(5) Designated marine sanctuaries;

(6) Commercial and recreational fishing areas;

(7) Environmentally sensitive areas; and

(8) Designated units of the National Park System, National Wild and Scenic Rivers System, National Wilderness Preservation System, properties included on the National Register of Historic Places and National Registry of Natural Landmarks, and National Wildlife Refuge System.

(c) The traditional use of areas for lightering operations;

(d) The normal weather and sea conditions in the areas, and their effect on lightering operations, and the fate of possible cargo discharges;

(e) The depth of water and underwater obstructions that may adversely impact anchorages and clearance of vessels;

(f) Other relevant safety, environmental, or economic data.

Subpart C—Lightering Zones and Operational Requirements for the Gulf of Mexico

SOURCE: CGD 93–081, 60 FR 45017, Aug. 29, 1995, unless otherwise noted.

§ 156.300 Designated lightering zones.

The following lightering zones are designated in the Gulf of Mexico and are more than 60 miles from the baseline from which the territorial sea is measured:

(a) *Southtex—lightering zone.* This lightering zone and the geographic area for this zone are coterminous and consist of the waters bounded by a line connecting the following points beginning at:

Latitude N.	*Longitude W.*
27°40′00″,	93°00′00″, thence to
27°40′00″,	94°35′00″, thence to
28°06′30″,	94°35′00″, thence to
27°21′00″,	96°00′00″, thence to
26°30′00″,	96°00′00″, thence to
26°30′00″,	93°00′00″, and thence to the point of beginning.

(NAD 83)

(b) *Gulfmex No. 2—lightering zone.* This lightering zone and the geographic area for this zone are coterminous and consist of the waters bounded by a line connecting the following points beginning at:

Latitude N.	*Longitude W.*
27°53′00″,	89°00′00″, thence to
27°53′00″,	91°30′00″, thence to
26°30′00″,	91°30′00″, thence to
26°30′00″,	89°00′00″, and thence to the point of beginning.

(NAD 83)

(c) *Offshore Pascagoula No. 2—lightering zone.* This lightering zone and the geographic area for this zone are coterminous and consist of the waters bounded by a line connecting the following points beginning at:

Latitude N.	*Longitude W.*
29°20′00″,	87°00′00″, thence to
29°12′00″,	87°45′00″, thence to
28°39′00″,	88°00′00″, thence to
28°00′00″,	88°00′00″, thence to
28°00′00″,	87°00′00″, and thence to the point of beginning.

(NAD 83)

(d) *South Sabine Point—lightering zone.* This lightering zone and the geographic area for this zone are coterminous and consist of the waters bounded by a line connecting the following points beginning at:

Latitude N.	*Longitude W.*
28°30′00″,	92°38′00″, thence to
28°44′00″,	93°24′00″, thence to
28°33′00″,	94°00′00″, thence to
28°18′00″,	94°00′00″, thence to
28°18′00″,	92°38′00″, and thence to the point of beginning.

(NAD 83)

§ 156.310 Prohibited areas.

Lightering operations are prohibited within the following areas in the Gulf of Mexico:

(a) *Claypile—prohibited area.* This prohibited area consists of the waters bounded by a line connecting the following points beginning at:

Latitude N.	*Longitude W.*
28°15′00″,	94°35′00″, thence to
27°40′00″,	94°35′00″, thence to
27°40′00″,	94°00′00″, thence to
28°33′00″,	94°00′00″, and thence to the point of beginning.

(NAD 83)

(b) *Flower Garden—prohibited area.* This prohibited area consists of the waters bounded by a line connecting the following points beginning at:

Latitude N.	*Longitude W.*
27°40′00″,	94°00′00″, thence to
28°18′00″,	94°00′00″, thence to
28°18′00″,	92°38′00″, thence to
28°30′00″,	92°38′00″, thence to
28°15′00″,	91°30′00″, thence to
27°40′00″,	91°30′00″, and thence to the point of beginning.

(NAD 83)

(c) *Ewing—prohibited area.* This prohibited area consists of the waters bounded by a line connecting the following points beginning at:

Latitude N.	*Longitude W.*
27°53′00″,	91°30′00″, thence to
28°15′00″,	91°30′00″, thence to
28°15′00″,	90°10′00″, thence to
27°53′00″,	90°10′00″, and thence to the point of beginning.

(NAD 83)

§ 156.320 Maximum operating conditions.

Unless otherwise specified, the maximum operating conditions in this section apply to tank vessels operating within the lightering zones designated in this subpart.

(a) A tank vessel shall not attempt to moor alongside another vessel when either of the following conditions exist:

(1) The wind velocity is 56 km/hr (30 knots) or more; or

(2) The wave height is 3 meters (10 feet) or more.

(b) Cargo transfer operations shall cease and transfer hoses shall be drained when—

(1) The wind velocity exceeds 82 km/hr (44 knots); or

(2) Wave heights exceed 5 meters (16 feet).

§ 156.330 Operations.

(a) Unless otherwise specified in this subpart, or when otherwise authorized by the cognizant Captain of the Port (COTP) or District Commander, the master of a vessel lightering in a zone designated in this subpart shall ensure that all officers and appropriate members of the crew are familiar with the guidelines in paragraphs (b) and (c) of this section and that the requirements of paragraphs (d) through (l) of this section are complied with.

(b) Lightering operations should be conducted in accordance with the Oil Companies International Marine Forum Ship to Ship Transfer Guide (Petroleum), Second Edition, 1988, to the maximum extent practicable.

(c) Helicopter operations should be conducted in accordance with the International Chamber of Shipping Guide to Helicopter/Ship Operations, Third Edition, 1989, to the maximum extent practicable.

(d) The vessel to be lightered shall make a voice warning prior to the commencement of lightering activities via channel 13 VHF and 2182 Khz. The voice warning shall include:

(1) The names of the vessels involved;

(2) The vessels' geographical positions and general headings;

(3) A description of the operations;

(4) The expected time of commencement and duration of the operation; and

(5) Request for wide berth.

(e) In the event of a communications failure between the lightering vessels or the respective persons-in-charge of the transfer, or an equipment failure affecting the vessel's cargo handling capability or ship's maneuverability, the affected vessel shall suspend lightering activities and shall sound at least five short, rapid blasts on the vessel's whistle. Lightering activities shall remain suspended until corrective action has been completed.

(f) No vessel involved in a lightering operation may open its cargo system until the servicing vessel is securely moored alongside the vessel to be lightered.

(g) If any vessel not involved in the lightering operation or support activities approaches within 100 meters of vessels engaged in lightering, the vessel engaged in lightering shall warn the approaching vessel by sounding a loud hailer, ship's whistle, or any other appropriate means.

(h) Only a lightering tender, a supply boat, or a crew boat, equipped with a spark arrestor on its exhaust, or a tank vessel providing bunkers, may moor alongside a vessel engaged in lightering operations.

(i) Lightering operations shall not be conducted within 1 nautical mile of offshore structures or mobile offshore drilling units.

(j) No vessel engaged in lightering activities may anchor over charted pipelines, artificial reefs, or historical resources.

(k) All vessels engaged in lightering activities shall be able to immediately maneuver at all times while inside a designated lightering zone. The main propulsion system must not be disabled at any time.

(l) In preparing to moor alongside the vessel to be lightered, a service vessel shall not approach the vessel to be lightered closer than 1000 meters unless the service vessel is positioned broad on the quarter of the vessel to be lightered. The service vessel must transition to a nearly parallel heading prior to closing to within 50 meters of the vessel to be lightered.

PART 157—RULES FOR THE PROTECTION OF THE MARINE ENVIRONMENT RELATING TO TANK VESSELS CARRYING OIL IN BULK

Subpart A—General

Sec.
157.01 Applicability.
157.02 Incorporation by reference: Where can I get a copy of the publications mentioned in this part?
157.03 Definitions.
157.04 Authorization of classification societies.
157.05 Performing calculations for this part.
157.06 Appeals.
157.07 Equivalents.

Subpart B—Design, Equipment, and Installation

157.08 Applicability of subpart B.
157.09 Segregated ballast.
157.10 Segregated ballast tanks and crude oil washing systems for certain new vessels.
157.10a Segregated ballast tanks, crude oil washing systems, and dedicated clean ballast tanks for certain new and existing vessels of 40,000 DWT or more.
157.10b Segregated ballast tanks, dedicated clean ballast tanks, and special ballast arrangements for tank vessels transporting Outer Continental Shelf oil.
157.10c Segregated ballast tanks, crude oil washing systems, and dedicated clean ballast tanks for certain new and existing tankships of 20,000 to 40,000 DWT.
157.10d Double hulls on tank vessels.
157.11 Pumping, piping and discharge arrangements.
157.12 Oil discharge monitoring and control system.
157.12a Definitions.
157.12b Implementation requirements.
157.12c Construction, maintenance, security, calibration, and training.
157.12d Technical specifications.
157.12e Certificate of approval.
157.12f Workshop functional test requirements.
157.12g Plan approval requirements.
157.13 Designated observation area.
157.15 Slop tanks in tank vessels.
157.17 Oil residue (sludge) tank.
157.19 Cargo tank arrangement and size.
157.21 Subdivision and stability.
157.22 Intact stability requirements.
157.23 Cargo and ballast system information.

157.24 Submission of calculations, plans, and specifications.
157.24a Submission of calculations, plans, and specifications for existing vessels installing segregated ballast tanks.

Subpart C—Vessel Operation

157.25 Applicability of subpart C.
157.26 Operation of a tank vessel in violation of regulations.
157.27 Discharges: Tank vessels carrying oil exclusively on rivers, lakes, bays, sounds, and the Great Lakes, and seagoing tank vessels of less than 150 gross tons.
157.28 Discharges from tank barges exempted from certain design requirements.
157.29 Discharges: Seagoing tank vessels of 150 gross tons or more.
157.31 Discharges: Chemical additives.
157.33 Water ballast in fuel oil tanks.
157.35 Ballast added to cargo tanks.
157.37 Discharge of oily mixtures from oil cargoes.
157.39 Machinery space bilges.
157.41 Emergencies.
157.43 Discharges of clean and segregated ballast: Seagoing tank vessels of 150 gross tons or more.
157.45 Valves in cargo or ballast piping system.
157.47 Information for master.
157.49 Instruction manual.

Subpart D—Crude Oil Washing (COW) System on Tank Vessels

GENERAL

157.100 Plans for U.S. tank vessels: Submission.
157.102 Plans for foreign tank vessels: Submission.
157.104 Scale models.
157.106 Letter of acceptance.
157.108 Crude Oil Washing Operations and Equipment Manual for U.S. tank vessels: Submission.
157.110 Crude Oil Washing Operations and Equipment Manual for foreign tank vessels: Submission.
157.112 Approved Crude Oil Washing Operations and Equipment Manual.
157.114 Crude Oil Washing Operations and Equipment Manual: Not approved.
157.116 Required documents: U.S. tank vessels.
157.118 Required documents: Foreign tank vessels.
157.120 Waiver of required documents.

DESIGN, EQUIPMENT, AND INSTALLATION

157.122 Piping, valves, and fittings.
157.124 COW tank washing machines.
157.126 Pumps.
157.128 Stripping system.
157.130 Crude oil washing with more than one grade of crude oil.
157.132 Cargo tanks: Hydrocarbon vapor emissions.
157.134 Cargo tank drainage.
157.136 Two-way voice communications.
157.138 Crude Oil Washing Operations and Equipment Manual.

INSPECTIONS

157.140 Tank vessel inspections.
157.142 Letter of acceptance: Inspections.
157.144 Tank vessels of the same class: Inspections.
157.146 Similar tank design: Inspections on U.S. tank vessels.
157.147 Similar tank design: Inspections on foreign tank vessels.
157.148 COW system: Evidence for inspections.
157.150 Crude Oil Washing Operations and Equipment Manual: Recording information after inspections.

PERSONNEL

157.152 Person in charge of COW operations.
157.154 Assistant personnel.

COW OPERATIONS

157.155 COW operations: General.
157.156 COW operations: Meeting manual requirements.
157.158 COW operations: Changed characteristics.
157.160 Tanks: Ballasting and crude oil washing.
157.162 Crude oil washing during a voyage.
157.164 Use of inert gas system.
157.166 Hydrocarbon emissions.
157.168 Crew member: Main deck watch.
157.170 COW equipment: Removal.
157.172 Limitations on grades of crude oil carried.

Subpart E—Dedicated Clean Ballast Tanks on Tank Vessels

GENERAL

157.200 Plans for U.S. tank vessels: Submission.
157.202 Plans and documents for foreign tank vessels: Submission.
157.204 Letter of acceptance.
157.206 Dedicated Clean Ballast Tanks Operations Manual for U.S. tank vessels: Submission.
157.208 Dedicated Clean Ballast Tanks Operations Manual for foreign tank vessels: Submission.
157.210 Approved Dedicated Clean Ballast Tanks Operations Manual.
157.212 Dedicated Clean Ballast Tanks Operations Manual: Not approved.
157.214 Required documents: U.S. tank vessels.

157.216 Required documents: Foreign tank vessels.
157.218 Dedicated clean ballast tanks: Alterations.

DESIGN AND EQUIPMENT

157.220 Dedicated clean ballast tanks: Standards.
157.222 Pump and piping arrangements.
157.224 Dedicated Clean Ballast Tanks Operations Manual.

DEDICATED CLEAN BALLAST TANKS OPERATIONS

157.225 Dedicated clean ballast tanks operations: General.
157.226 Dedicated Clean Ballast Tanks Operations Manual: Procedures to be followed.
157.228 Isolating Valves: Closed during a voyage.

Subpart F—Exemption From § 157.10a or § 157.10c

157.300 Qualifications for exemptions under this part.
157.302 Applying for an exemption or requesting modification of an exemption.
157.304 Shore-based reception facility: standards.
157.306 Granting, denying, or modifying an exemption.
157.308 Revocation of exemption: procedure and appeals.
157.310 Exempted vessels: operations.

Subpart G—Interim Measures for Certain Tank Vessels Without Double Hulls Carrying Petroleum Oils

157.400 Purpose and applicability.
157.410 Emergency lightering requirements for oil tankers.
157.415 Bridge resource management policy and procedures.
157.420 Vessel specific watch policy and procedures.
157.430 Enhanced survey requirements.
157.435 Vital systems surveys.
157.440 Autopilot alarm or indicator.
157.445 Maneuvering performance capability.
157.450 Maneuvering and vessel status information.
157.455 Minimum under-keel clearance.
157.460 Additional operational requirements for tank barges.

Subpart H—Interim Measures for Certain Tank Vessels Without Double Hulls Carrying Animal Fat or Vegetable Oil

157.500 Purpose and applicability.
157.510 Operational measures.

Subpart I—Interim Measures for Certain Tank Vessels Without Double Hulls Carrying Other Non-Petroleum Oil

157.600 Purpose and applicability.
157.610 Operational measures.

APPENDIX A TO PART 157—DAMAGE ASSUMPTIONS, HYPOTHETICAL OUTFLOWS, AND CARGO TANK SIZE AND ARRANGEMENTS
APPENDIX B TO PART 157—SUBDIVISION AND STABILITY ASSUMPTIONS
APPENDIX C TO PART 157—PROCEDURE FOR DETERMINING DISTRIBUTION OF SEGREGATED BALLAST TANKS TO PROVIDE PROTECTION AGAINST OIL OUTFLOW IN THE EVENT OF GROUNDING, RAMMING, OR COLLISION
APPENDIX D TO PART 157—EXAMPLE OF A PROCEDURE FOR DEDICATED CLEAN BALLAST TANKS OPERATIONS
APPENDIX E TO PART 157—SPECIFICATIONS FOR THE DESIGN, INSTALLATION AND OPERATION OF A PART FLOW SYSTEM FOR CONTROL OF OVERBOARD DISCHARGES
APPENDIX F TO PART 157 [RESERVED]
APPENDIX G TO PART 157—TIMETABLES FOR APPLICATION OF DOUBLE HULL REQUIREMENTS

AUTHORITY: 33 U.S.C. 1903; 46 U.S.C. 3703, 3703a (note); Department of Homeland Security Delegation No. 0170.1. Subparts G, H, and I are also issued under section 4115(b), Pub. L. 101–380, 104 Stat. 520; Pub. L. 104–55, 109 Stat. 546.

SOURCE: CGD 74–32, 40 FR 48283, Oct. 14, 1975, unless otherwise noted.

EDITORIAL NOTE: Nomenclature changes to part 157 appear by USCG–2008–0179, 73 FR 35015, June 19, 2008.

Subpart A—General

§ 157.01 Applicability.

(a) Unless otherwise indicated, this part applies to each vessel that carries oil in bulk as cargo and that is:

(1) Documented under the laws of the United States (a U.S. vessel); or

(2) Any other vessel that enters or operates in the navigable waters of the United States, or that operates, conducts ligtering under 46 U.S.C. 3715, or receives cargo from or transfers cargo to a deepwater port under 33 U.S.C. 1501 *et seq.*, in the United States Exclusive Economic Zone, as defined in 33 U.S.C. 2701(8).

(b) This part does not apply to a vessel exempted under 46 U.S.C. 2109 or 46 U.S.C. 3702.

[CGD 90–051, 57 FR 36238, Aug. 12, 1992, as amended by CGD 91–045, 61 FR 39788, July 30, 1996]

§ 157.02 Incorporation by reference: Where can I get a copy of the publications mentioned in this part?

(a) Certain material is incorporated by reference into this part with the approval of the Director of the Federal Register under 5 U.S.C. 552(a) and 1 CFR part 51. To enforce any edition other than that specified in this section, the Coast Guard must publish notice of change in the FEDERAL REGISTER and the material must be available to the public. All approved material is available for inspection at the National Archives and Records Administration (NARA). For information on the availability of this material at NARA, call 202–741–6030 or go to *http://www.archives.gov/federal_register/code_of_federal_regulations/ibr_locations.html*. Also, it is available for inspection at the Coast Guard, Systems Engineering Division (CG–5213), Office of Design and Engineering Standards, U.S. Coast Guard, 2100 2nd St. SW., Stop 7126, Washington, DC 20593–7126, telephone 202–372–1379, and is available from the sources indicated in this section.

(b) *International Maritime Organization (IMO)*—4 Albert Embankment, London SE1 7SR, United Kingdom.

(1) IMCO Assembly Resolution A.393(X), adopted on 14 November 1977, Recommendation on International Performance and Test Specifications For Oily Water Separating Equipment and Oil Content Meters (''A.393(x)''), incorporation by reference approved for § 157.12.

(2) IMO Assembly Resolution A.496(XII), Adopted on 19 November 1981, Agenda Item 11, Guidelines and Specifications for Oil Discharge Monitoring and Control Systems for Oil Tankers (''A.496(XII)''), incorporation by reference approved for § 157.12.

(3) IMO Assembly Resolution A.586(14), Adopted on 20 November 1985, Agenda item 12, Revised Guidelines and Specifications for Oil Discharge Monitoring and Control Systems for Oil Tankers (''A.586(14)''), incorporation by reference approved for § 157.12.

(4) IMO Marine Environment Protection Committee Resolution MEPC.13(19), adopted on 9 December 1983, Guidelines for Plan Approval and Installation Survey of Oil Discharge Monitoring and Control Systems for Oil Tankers and Environmental Testing of Control Sections Thereof (''MEPC.13(19)''), incorporation by reference approved for § 157.12.

(5) IMO Marine Environment Protection Committee Resolution MEPC.108(49), Adopted on 18 July 2003, Revised Guidelines and Specifications for Oil Discharge Monitoring and Control Systems for Oil Tankers (''MEPC.108(49)''), incorporation by reference approved for § 157.12.

(6) IMO Assembly Resolution A.601(15), Provision and Display of Manoeuvring Information on Board Ships, Annex sections 1.1, 2.3, 3.1, and 3.2 with appendices, adopted on 19 November 1987 (''A.601(15)''), incorporation by reference approved for § 157.450.

(7) IMO Assembly Resolution A.744(18), Guidelines on the Enhanced Programme of Inspections During Surveys of Bulk Carriers and Oil Tankers, Annex B sections 1.1.3–1.1.4, 1.2–1.3, 2.1, 2.3–2.6, 3–8, and Annexes 1–10 with appendices, adopted 4 November 1993 (''A.744(18)''), incorporation by reference approved for § 157.430.

(8) IMO Assembly Resolution A.751(18), Interim Standards for Ship Manoeuvrability, Annex sections 1.2, 2.3–2.4, 3–4.2, and 5, adopted 4 November 1993 with Explanatory Notes in MSC/Circ. 644 dated 6 June 1994 (''A.751(18)''), incorporation by reference approved for § 157.445.

(c) *Oil Companies International Marine Forum (OCIMF)* 27 Queen Anne's Gate, London, SW1H 9BU, England].

(1) International Safety Guide for Oil Tankers and Terminals, Fourth Edition, Chapters 6, 7, and 10, 1996, incorporation by reference approved for § 157.435.

(2) [Reserved]

[USCG–2004–18939, 74 FR 3378, Jan. 16, 2009, as amended by USCG–2010–0351, 75 FR 36286, June 25, 2010]

§ 157.03 Definitions.

Except as otherwise stated in a subpart:

Amidships means the middle of the length.

Animal fat means a non-petroleum oil, fat, or grease derived from animals and not specifically identified elsewhere in this part.

Ballast voyage means the voyage that a tank vessel engages in after it leaves the port of final cargo discharge.

Breadth or *B* means the maximum molded breadth of a vessel in meters.

Cargo tank length means the length from the forward bulkhead of the forwardmost cargo tanks, to the after bulkhead of the aftermost cargo tanks.

Center tank means any tank inboard of a longitudinal bulkhead.

Clean ballast means ballast which:

(1) If discharged from a vessel that is stationary into clean, calm water on a clear day, would not—

(i) Produce visible traces of oil on the surface of the water or on adjoining shore lines; or

(ii) Cause a sludge or emulsion to be deposited beneath the surface of the water or upon adjoining shore lines; or

(2) If verified by an approved oil discharge monitoring and control system, has an oil content that does not exceed 15 p.m.

Combination carrier means a vessel designed to carry oil or solid cargoes in bulk.

Crude oil means any liquid hydrocarbon mixture occurring naturally in the earth, whether or not treated to render it suitable for transportation, and includes crude oil from which certain distillate fractions may have been removed, and crude oil to which certain distillate fractions may have been added.

Deadweight or *DWT* means the difference in metric tons between the lightweight displacement and the total displacement of a vessel measured in water of specific gravity 1.025 at the load waterline corresponding to the assigned summer freeboard.

Dedicated clean ballast tank means a cargo tank that is allocated solely for the carriage of clean ballast.

Domestic trade means trade between ports or places within the United States, its territories and possessions, either directly or via a foreign port including trade on the navigable rivers, lakes, and inland waters.

Double bottom means watertight protective spaces that do not carry any oil and which separate the bottom of tanks that hold any oil within the cargo tank length from the outer skin of the vessel.

Double hull means watertight protective spaces that do not carry any oil and which separate the sides, bottom, forward end, and aft end of tanks that hold any oil within the cargo tank length from the outer skin of the vessel as prescribed in § 157.10d.

Doubles sides means watertight protective spaces that do not carry any oil and which separate the sides of tanks that hold any oil within the cargo tank length from the outer skin of the vessel.

Existing vessel means any vessel that is not a new vessel.

Fleeting or assist towing vessel means any commercial vessel engaged in towing astern, alongside, or pushing ahead, used solely within a limited geographic area, such as a particular barge fleeting area or commercial facility, and used solely for restricted service, such as making up or breaking up larger tows.

Foreign trade means any trade that is not domestic trade.

From the nearest land means from the baseline from which the territorial sea of the United States is established in accordance with international law.

Fuel oil means any oil used as fuel for machinery in the vessel in which it is carried.

Inland vessel means a vessel that is not oceangoing and that does not operate on the Great Lakes.

Instantaneous rate of discharge of oil content means the rate of discharge of oil in liters per hour at any instant, divided by the speed of the vessel in knots at the same instant.

Integrated tug barge means a tug and a tank barge with a mechanical system that allows the connection of the propulsion unit (the tug) to the stern of the cargo carrying unit (the tank barge) so that the two vessels function as a single self-propelled vessel.

Large primary structural member includes any of the following:

(1) Web frames.
(2) Girders.
(3) Webs.
(4) Main brackets.
(5) Transverses.
(6) Stringers.
(7) Struts in transverse web frames when there are 3 or more struts and the depth of each is more than 1/15 of the total depth of the tank.

Length or *L* means the distance in meters from the fore side of the stem to the axis of the rudder stock on a waterline at 85 percent of the least molded depth measured from the molded baseline, or 96 percent of the total length on that waterline, whichever is greater. In vessels designed with drag, the waterline is measured parallel to the designed waterline.

Lightweight means the displacement of a vessel in metric tons without cargo, fuel oil, lubricating oil, ballast water, fresh water, and feedwater in tanks, consumable stores, and any persons and their effects.

Major conversion means a conversion of an existing vessel that:

(1) Substantially alters the dimensions or carrying capacity of the vessel, except a conversion that includes only the installation of segregated ballast tanks, dedicated clean ballast tanks, a crude oil washing system, double sides, a double bottom, or a double hull;

(2) Changes the type of vessel;

(3) Substantially prolongs the vessel's service life; or

(4) Otherwise so changes the vessel that it is essentially a new vessel, as determined by the Commandant (CG–543).

MARPOL 73/78 means the International Convention for the Prevention of Pollution from Ships, 1973, as modified by the Protocol of 1978 relating to that Convention. A copy of MARPOL 73/78 is available from the International Maritime Organization, 4 Albert Embankment, London, SE1

New vessel means:

(1) A U.S. vessel in domestic trade that:

(i) Is constructed under a contract awarded after December 31, 1974;

(ii) In the absence of a building contract, has the keel laid or is at a similar stage of construction after June 30, 1975;

(iii) Is delivered after December 31, 1977; or

(iv) Has undergone a major conversion for which:

(A) The contract is awarded after December 31, 1974;

(B) In the absence of a contract, conversion is begun after June 30, 1975; or

(C) Conversion is completed after December 31, 1977; and

(2) A foreign vessel or a U.S. vessel in foreign trade that:

(i) Is constructed under a contract awarded after December 31, 1975;

(ii) In the absence of a building contract, has the keel laid or is at a similar stage of construction after June 30, 1976;

(iii) Is delivered after December 31, 1979; or

(iv) Has undergone a major conversion for which:

(A) The contract is awarded after December 31, 1975;

(B) In the absence of a contract, conversion is begun after June 30, 1976; or

(C) Conversion is completed after December 31, 1979.

Non-petroleum oil means oil of any kind that is not petroleum-based. It includes, but is not limited to, animal fat and vegetable oil.

Oceangoing has the same meaning as defined in § 151.05 of this chapter.

Officer in charge of a navigational watch means any officer employed or engaged to be responsible for navigating or maneuvering the vessel and for maintaining a continuous vigilant watch during his or her periods of duty and following guidance set out by the master, international or national regulations, and company policies.

Oil means oil of any kind or in any form including, but not limited to, petroleum, fuel oil, sludge, oil refuse, and oil mixed with wastes other than dredged spoil. This includes liquid hydrocarbons as well as animal and vegetable oils.

Oil cargo residue means any residue of oil cargo whether in solid, semi-solid, emulsified, or liquid form from cargo tanks and cargo pump room bilges, including but not limited to, drainages, leakages, exhausted oil, muck, clingage, sludge, bottoms, paraffin

(wax), and any constituent component of oil. The term ''oil cargo residue'' is also known as ''cargo oil residue.''

Oil residue means—

(1) Oil cargo residue; and

(2) Other residue of oil whether in solid, semi-solid, emulsified, or liquid form, resulting from drainages, leakages, exhausted oil, and other similar occurrences from machinery spaces.

Oil spill response vessel means a vessel that is exclusively dedicated to operations to prevent or mitigate environmental damage due to an actual or impending accidental oil spill. This includes a vessel that performs routine service as an escort for a tank vessel, but excludes a vessel that engages in any other commercial activity, such as the carriage of any type of cargo.

Oil tanker means a vessel that is constructed or adapted primarily to carry crude oil or products in bulk as cargo. This includes a tank barge, a tankship, and a combination carrier, as well as a vessel that is constructed or adapted primarily to carry noxious liquid substances in bulk as cargo and which also carries crude oil or products in bulk as cargo.

Oily mixture means a mixture, in any form, with any oil content. ''Oily mixture'' includes, but is not limited to—

(1) Slops from bilges;

(2) Slops from oil cargoes (such as cargo tank washings, oily waste, and oily refuse);

(3) Oil residue; and

(4) Oily ballast water from cargo or fuel oil tanks, including any oil cargo residue.

Oily mixture means a mixture with any oil content.

Other non-petroleum oil means an oil of any kind that is not petroleum oil, an animal fat, or a vegetable oil.

Permeability of a space means the ratio of the volume within a space that is assumed to be occupied by water to the total volume of that space.

Petroleum oil means petroleum in any form, including but not limited to, crude oil, fuel oil, sludge, oil residue, and refined products.

Primary towing vessel means any vessel engaged in towing astern, alongside, or pushing ahead and includes the tug in an integrated tug barge. It does not include fleeting or assist towing vessels.

Product means any liquid hydrocarbon mixture in any form, except crude oil, petrochemicals, and liquefied gases.

Segregated ballast means the ballast water introduced into a tank that is completely separated from the cargo oil and fuel oil system and that is permanently allocated to the carriage of ballast.

Slop tank means a tank specifically designated for the collection of cargo drainings, washings, and other oily mixtures.

Tank means an enclosed space that is formed by the permanent structure of a vessel, and designed for the carriage of liquid in bulk.

Tank barge means a tank vessel not equipped with a means of self-propulsion.

Tank vessel means a vessel that is constructed or adapted primarily to carry, or that carries, oil or hazardous material in bulk as cargo or cargo residue, and that—

(1) Is a vessel of the United States;

(2) Operates on the navigable waters of the United States; or

(3) Transfers oil or hazardous material in a port or place subject to the jurisdiction of the United States. This does not include an offshore supply vessel, or a fishing vessel or fish tender vessel of not more than 750 gross tons when engaged only in the fishing industry.

Tankship means a tank vessel propelled by mechanical power or sail.

Vegetable oil means a non-petroleum oil or fat not specifically identified elsewhere in this part that is derived from plant seeds, nuts, kernels, or fruits.

Wing tank means a tank that is located adjacent to the side shell plating.

[CGD 96–026, 61 FR 33666, June 28, 1996; 61 FR 36786, July 12, 1996, as amended by CGD 91–045, 61 FR 39788, July 30, 1996; USCG–2000–7641, 66 FR 55572, Nov. 2, 2001; USCG–2004–18939, 74 FR 3378, Jan. 16, 2009]

§ 157.04

societies.

(a) The Coast Guard may authorize any classification society (CS) to perform certain plan reviews, certifications, and inspections required by

this part on vessels classed by that CS, except that only U.S. classification societies may be authorized to perform those plan reviews, inspections, and certifications for U.S. vessels.

(b) If a CS desires authorization to perform the plan reviews, certifications, and inspections required under this part, it must submit to the Commandant (CG–543), U.S. Coast Guard, 2100 2nd St. SW., Stop 7581, Washington, DC 20593–7581, evidence from the governments concerned showing that they have authorized the CS to inspect and certify vessels on their behalf under the MARPOL 73/78.

(c) The Coast Guard notifies the CS in writing whether or not it is accepted as an authorized CS. If authorization is refused, reasons for the refusal are included.

(d) Acceptance as an authorized CS terminates unless the following are met:

(1) The authorized CS must have each Coast Guard regulation that is applicable to foreign vessels on the navigable waters of the United States.

(2) Each issue concerning equivalents to the regulations in this part must be referred to the Coast Guard for determination.

(3) Copies of any plans, calculations, records of inspections, or other documents relating to any plan review, inspection, or certification performed to meet this part must be made available to the Coast Guard.

(4) Each document certified under §§ 157.116(a)(2), 157.118(b)(1)(ii), and 157.216(b)(1)(ii) must be marked with the name or seal of the authorized CS.

(5) A copy of the final documentation that is issued to each vessel that is certified under this part must be referred to the Commandant (CG–543), U.S. Coast Guard, 2100 2nd St. SW., Stop 7581, Washington, DC 20593–7581.

(Reporting and Recordkeeping requirements approved by the Office of Management and Budget under control number 1625–0036)

[CGD 82–28, 50 FR 11625, and 11630, Mar. 22, 1985, as amended by CGD 88–052, 53 FR 25122, July 1, 1988; CGD 96–026, 61 FR 33668, June 28, 1996; USCG–2000–7641, 66 FR 55573, Nov. 2, 2001; USCG–2006–25150, 71 FR 39210, July 12, 2006; USCG–2010–0351, 75 FR 36286, June 25, 2010]

§ 157.05 Performing calculations for this part.

In this part, unless the context requires otherwise:

(a) Formulas are in the International System of Units (SI);

(b) Values used in those formulas must be in the International System of Units; and

(c) Forward and after perpendiculars are located at the forward end and at the after end of the length. The forward perpendicular coincides with the foreside of the stem on the waterline on which the length of the vessel is measured.

§ 157.06 Appeals.

(a) Any person directly affected by an action taken under this part may request reconsideration by the Coast Guard official who is responsible for that action.

(b) Any person not satisfied with a ruling made under the procedure contained in paragraph (a) of this section may appeal that ruling in writing, except as allowed under paragraph (e) of this section, to the Coast Guard District Commander of the district in which the action was taken. The appeal may contain supporting documentation and evidence that the appellant wishes to have considered. If requested, the District Commander may stay the effect of the action being appealed while the ruling is being reviewed. The District Commander issues a ruling after reviewing the appeal submitted under this paragraph.

(c) Any person not satisfied with a ruling made under the procedure contained in paragraph (b) of this section may appeal that ruling in writing, except as allowed under paragraph (e) of this section, to the Assistant Commandant for Marine Safety, Security, and Stewardship (CG–5), U.S. Coast Guard, 2100 2nd St. SW., Stop 7355, Washington, DC 20593–7355. The appeal may contain supporting documentation and evidence that the appellant wishes to have considered. If requested, the Assistant Commandant for Marine Safety, Security and Stewardship (CG–5) may stay the effect of the action being appealed while the ruling is being reviewed. The Chief, Marine Safety, Security and Environmental

Protection issues a ruling after reviewing the appeal submitted under this paragraph.

(d) Any decision made by the Assistant Commandant for Marine Safety, Security, and Stewardship (CG–5) under the procedure contained in paragraph (c) of this section is final agency action.

(e) If the delay in presenting a written appeal would have a significant adverse impact on the appellant, the appeal under paragraph (b) or (c) of this section may initially be presented orally. If an initial presentation of the appeal is made orally, the appellant must submit the appeal in writing within five days of the oral presentation to the Coast Guard official to whom the oral presentation was made. The written appeal must contain, at a minimum the basis for the appeal and a summary of the material presented orally.

[CGD 77–058b, 45 FR 43706, June 30, 1980, as amended by CGD 88–052, 53 FR 25122, July 1, 1988; CGD 96–026, 61 FR 33667, 33668, June 28, 1996; CGD 97–023, 62 FR 33364, June 19, 1997; USCG–2002–12471, 67 FR 41333, June 18, 2002; USCG–2008–0179, 73 FR 35015, June 19, 2008; USCG–2010–0351, 75 FR 36286, June 25, 2010]

§ 157.07 Equivalents.

The Coast Guard may accept an equivalent, in accordance with the procedure in 46 CFR 30.15–1, of a design or an equipment to fulfill a requirement in this part, except an operational method may not be substituted for a design or equipment requirement that is also required under the MARPOL 73/78.

[CGD 82–28, 50 FR 11625, Mar. 22, 1985, as amended by CGD 97–023, 62 FR 33364, June 19, 1997; USCG–2000–7641, 66 FR 55573, Nov. 2, 2001]

Subpart B—Design, Equipment, and Installation

§ 157.08 Applicability of subpart B.

NOTE: An ''oil tanker'' as defined in § 157.03 includes barges as well as self-propelled vessels.

(a) Sections 157.10d and 157.11(g) apply to each vessel to which this part applies.

(b) Sections 157.11 (a) through (f), 157.12, 157.15, 157.19(b)(3), 157.33, and 157.37 apply to each vessel to which this part applies that carries 200 cubic meters or more of crude oil or products in bulk as cargo, as well as to each oceangoing oil tanker to which this part applies of 150 gross tons or more. These sections do not apply to a foreign vessel which remains beyond the navigable waters of the United States and does not transfer oil cargo at a port or place subject to the jurisdiction of the United States.

(c) Section 157.21 applies to each oil tanker to which this part applies of 150 gross tons or more that is oceangoing or that operates on the Great Lakes. This section does not apply to a foreign vessel which remains beyond the navigable waters of the United States and does not transfer oil cargo at a port or place subject to the jurisdiction of the United States.

(d) Sections in subpart B of 33 CFR part 157 that are not specified in paragraphs (a) through (c) of this section apply to each oceangoing oil tanker to which this part applies of 150 gross tons or more, unless otherwise indicated in paragraphs (e) through (m) of this section. These sections do not apply to a foreign vessel which remains beyond the navigable waters of the United States and does not transfer oil cargo at a port or place subject to the jurisdiction of the United States.

(e) Sections 157.11 (a) through (f), 157.12, and 157.15 do not apply to a vessel, except an oil tanker, that carries less than 1,000 cubic meters of crude oil or products in bulk as cargo and which retains oily mixtures on board and discharges them to a reception facility.

(f) Sections 157.11 (a) through (f), 157.12, 157.13, and 157.15 do not apply to a tank vessel that carries only asphalt, carbon black feedstock, or other products with similar physical properties, such as specific gravity and cohesive and adhesive characteristics, that inhibit effective product/water separation and monitoring.

(g) Sections 157.11 (a) through (f), 157.12, 157.13, 157.15, and 157.23 do not apply to a tank barge that cannot ballast cargo tanks or wash cargo tanks while underway.

(h) Sections 157.19 and 157.21 do not apply to a tank barge that is certificated by the Coast Guard for limited

short protected coastwise routes if the barge is otherwise constructed and certificated for service exclusively on inland routes.

(i) Section 157.09(d) does not apply to any:

(1) U.S. vessel in domestic trade that is constructed under a contract awarded before January 8, 1976;

(2) U.S. vessel in foreign trade that is constructed under a contract awarded before April 1, 1977; or

(3) Foreign vessel that is constructed under a contract awarded before April 1, 1977.

(j) Sections 157.09 and 157.10a do not apply to a new vessel that:

(1) Is constructed under a building contract awarded after June 1, 1979;

(2) In the absence of a building contract, has the keel laid or is at a similar stage of construction after January 1, 1980;

(3) Is delivered after June 1, 1982; or

(4) Has undergone a major conversion for which:

(i) The contract is awarded after June 1, 1979;

(ii) In the absence of a contract, conversion is begun after January 1, 1980; or

(iii) Conversion is completed after June 1, 1982.

(k) Sections 157.09(b)(3), 157.10(c)(3), 157.10a(d)(3), and 157.10b(b)(3) do not apply to tank barges.

(l) Section 157.10b does not apply to tank barges if they do not carry ballast while they are engaged in trade involving the transfer of crude oil from an offshore oil exploitation or production facility on the Outer Continental Shelf of the United States.

(m) Section 157.12 does not apply to a U.S. vessel that:

(1) Is granted an exemption under Subpart F of this part; or

(2) Is engaged solely in voyages that are:

(i) Between ports or places within the United States, its territories or possessions;

(ii) Of less than 72 hours in length; and

(iii) At all times within 50 nautical miles of the nearest land.

(n) Section 157.10d does not apply to:

(1) A vessel that operates exclusively beyond the navigable waters of the United States and the United States Exclusive Economic Zone, as defined in 33 U.S.C. 2701(8);

(2) An oil spill response vessel;

(3) Before January 1, 2015—

(i) A vessel unloading oil in bulk as cargo at a deepwater port licensed under the Deepwater Port Act of 1974 (33 U.S.C. 1501 *et seq.*); or

(ii) A delivering vessel that is offloading oil in bulk as cargo in lightering activities—

(A) Within a lightering zone established under 46 U.S.C. 3715(b)(5); and

(B) More than 60 miles from the territorial sea base line, as defined in 33 CFR 2.20.

(4) A vessel documented under 46 U.S.C., Chapter 121, that was equipped with a double hull before August 12, 1992;

(5) A barge of less than 1,500 gross tons as measured under 46 U.S.C., Chapter 145, carrying refined petroleum in bulk as cargo in or adjacent to waters of the Bering Sea, Chukchi Sea, and Arctic Ocean and waters tributary thereto and in the waters of the Aleutian Islands and the Alaskan Peninsula west of 155 degrees west longitude; or

(6) A vessel in the National Defense Reserve Fleet pursuant to 50 App. U.S.C. 1744.

[CGD 75–240, 41 FR 54179, Dec. 13, 1976, as amended by CGD 77–058b, 45 FR 43707, June 30, 1980; CGD 79–152, 45 FR 82249, Dec. 15, 1980; CGD 76–088b, 48 FR 45720, Oct. 6, 1983; CGD 90–051, 57 FR 36239, Aug. 12, 1992; 57 FR 40494, Sept. 3, 1992; CGD 97–023, 62 FR 33364, June 19, 1997; USCG–2008–0179, 73 FR 35015, June 19, 2008]

§ 157.09 Segregated ballast.

(a) A new vessel of 70,000 tons DWT or more must have segregated ballast tanks that have a total capacity to allow the vessel to meet the draft and trim requirements in paragraph (b) of this section without recourse to the use of oil tanks for water ballast.

(b) In any ballast condition during any part of a voyage, including that of lightweight with only segregated ballast, the vessel's drafts and trim must have the capability of meeting each of the following requirements:

(1) The molded draft amidship (dm) in meters without taking into account vessel deformation must not be less

than dm in the following mathematical relationship:

dm=2.0+0.02L

(2) The drafts at the forward and after perpendiculars must correspond to those determined by the draft amidship as specified in paragraph (b)(1) of this section, in association with the trim by the stern of no more than 0.015L.

(3) The minimum allowable draft at the after perpendicular is that which is necessary to obtain full immersion of the propeller.

(c) The vessel may be designed to carry ballast water in cargo tanks during the condition described in § 157.35.

(d) Segregated ballast spaces, voids, and other noncargo-carrying spaces for a vessel of conventional form must be distributed:

(1) So that the mathematical average of the hypothetical collision (O_c) and the hypothetical stranding (O_s) outflows as determined by the application of the procedures in § 157.19 and appendix B is 80 percent or less of the maximum allowable outflow (O_A) as determined by § 157.19(b)(1); and

(2) To protect at least 45 percent of the sum of the side and bottom shell areas, based upon projected molded dimensions, within the cargo tank length. When the vessel design configuration does not provide for the spaces to be distributed to protect at least 45 percent of the side and bottom shell areas, the spaces must be distributed so that the mathematical average of the hypothetical collision (O_c) and the hypothetical stranding (O_s) outflows, determined by application of the procedures in § 157.19 and appendix B, is a further 2 percent less than the maximum allowable outflow (O_a) for each 1 percent by which the shell area protection coverage required is not achieved.

(e) A ballast space, void or other noncargo-carrying space used to meet requirements in paragraph (d) of this section must separate the cargo tank boundaries from the shell plating of the vessel by at least 2 meters.

(f) A vessel of conventional form for application of this section has:

(1) A block coefficient of .80 or greater,

(2) A length to depth ratio between 12 and 16, and

(3) A breadth to depth ratio between 1.5 and 3.5.

(g) Segregated ballast spaces, voids, and other noncargo-carrying spaces for a vessel not of conventional form must be distributed in a configuration acceptable to the Coast Guard.

[CGD 74–32, 40 FR 48283, Oct. 14, 1975, as amended by CGD 74–32, 40 FR 49328, Oct. 22, 1975; CGD 75–201, 41 FR 1482, Jan. 8, 1976]

§ 157.10 Segregated ballast tanks and crude oil washing systems for certain new vessels.

(a) This section applies to a new vessel that:

(1) Is constructed under a building contract awarded after June 1, 1979;

(2) In the absence of a building contract, has the keel laid or is at a similar stage of construction after January 1, 1980;

(3) Is delivered after June 1, 1982; or

(4) Has undergone a major conversion for which:

(i) The contract is awarded after June 1, 1979;

(ii) In the absence of a contract, conversion is begun after January 1, 1980; or

(iii) Conversion is completed after June 1, 1982.

(b) Each tank vessel under this section of 20,000 DWT or more that carries crude oil and of 30,000 DWT or more that carries products must have segregated ballast tanks that have a total capacity to allow the vessel to meet the draft and trim requirements in paragraph (c) of this section without recourse to the use of cargo tanks for water ballast.

(c) In any ballast condition during any part of a voyage, including that of lightweight with only segregated ballast, each tank vessel under paragraph (b) of this section must have the capability of meeting each of the following:

(1) The molded draft amidship (dm) in meters, without taking into account vessel deformation, must not be less than dm in the following mathematical relationship:

dm = 2.0 + 0.02L

(2) The drafts at the forward and after perpendiculars must correspond to those determined by the draft amidship under paragraph (c)(1) of this

section, in association with a trim by the stern of no more than 0.015L.

(3) The minimum draft at the after perpendicular is that which is necessary to obtain full immersion of the propeller.

(d) Segregated ballast tanks required in paragraph (b) of this section, voids, and other spaces that do not carry cargo must be distributed:

(1) For a vessel to which § 157.10d applies, in accordance with § 157.10d(c)(4); or,

(2) For a vessel to which § 157.10d does not apply, in accordance with the procedure contained in appendix C to this part.

(e) Each tank vessel under this section of 20,000 DWT or more that carries crude oil must have a crude oil washing system that meets the design, equipment, and installation requirements in subpart D of this part.

(f) Each tank vessel under this section may be designed to carry ballast water in cargo tanks as allowed under § 157.35.

[CGD 77–058b, 45 FR 43707, June 30, 1980, as amended by CGD 90–051, 57 FR 36239, Aug. 12, 1992]

§ 157.10a Segregated ballast tanks, crude oil washing systems, and dedicated clean ballast tanks for certain new and existing vessels of 40,000 DWT or more.

(a) An existing vessel of 40,000 DWT or more that carries crude oil and a new vessel of 40,000 DWT or more but less than 70,000 DWT that carries crude oil must have:

(1) Segregated ballast tanks with a total capacity to meet the draft and trim requirements in paragraph (d) of this section; or

(2) A crude oil washing system that meets the design, equipment, and installation requirements of subpart D of this part.

(b) [Reserved]

(c) An existing vessel of 40,000 DWT or more that carries products and a new vessel of 40,000 DWT or more but less than 70,000 DWT that carries products must have:

(1) Segregated ballast tanks with a total capacity to meet the draft and trim requirements in paragraph (d) of this section; or

(2) Dedicated clean ballast tanks that have a total capacity to meet the draft and trim requirements in paragraph (d) of this section and that meet the design and equipment requirements under subpart E of this part.

(d) In any ballast condition during any part of a voyage, including that of lightweight with either segregated ballast in segregated ballast tanks or clean ballast in dedicated clean ballast tanks, each tank vessel under paragraph (a)(1), or (c) of this section must have the capability of meeting each of the following without recourse to the use of cargo tanks for water ballast:

(1) The molded draft amidship (dm) in meters, without taking into account vessel deformation, must not be less than dm in the following mathematical relationship:

$$dm=2.0+0.02L$$

(2) The drafts at the forward and after perpendiculars must correspond to those determined by the draft amidship under paragraph (d)(1) of this section, in association with a trim by the stern of no more than 0.015L.

(3) The minimum draft at the after perpendicular is that which is necessary to obtain full immersion of the propeller.

(e) Each tank vessel that meets paragraph (a)(1), or (c) of this section may be designed to carry ballast water in cargo tanks as allowed under § 157.35.

NOTE: Segregated ballast tanks located in wing tanks provide protection against oil outflow in the event of a collision, ramming, or grounding.

[CGD 77–058b, 45 FR 43707, June 30, 1980, as amended by CGD 82–28, 50 FR 11626, Mar. 22, 1985; USCG–1998–3799, 63 FR 35531, June 30, 1998]

§ 157.10b Segregated ballast tanks, dedicated clean ballast tanks, and special ballast arrangements for tank vessels transporting Outer Continental Shelf oil.

(a) Each tank vessel that is engaged in the transfer of crude oil from an offshore oil exploitation or production facility on the Outer Continental Shelf of the United States on or after June 1, 1980 must, if segregated ballast tanks or dedicated clean ballast tanks are not required under § 157.09, § 157.10 or § 157.10a, have one of the following:

(1) Segregated ballast tanks with a total capacity to meet the draft and trim requirements in paragraph (b) of this section.

(2) Dedicated clean ballast tanks having a total capacity to meet the draft and trim requirements in paragraph (b) of this section and meeting the design and equipment requirements under subpart E of this part.

(3) Special ballast arrangements acceptable to the Coast Guard.

(b) In any ballast condition during any part of a voyage, including that of lightweight with either segregated ballast in segregated ballast tanks or clean ballast in dedicated clean ballast tanks, each vessel under paragraph (a)(1) or (a)(2) of this section must have the capability of meeting each of the following:

(1) The molded draft amidship (dm), in meters, without taking into account vessel deformation, must not be less than ''dm'' in the following mathematical relationship:

dm=2.00+0.020L for vessels of 150 meters or more in length

dm=1.25+0.025L for vessels less than 150 meters in length

(2) The drafts, in meters, at the forward and after perpendiculars must correspond to those determined by the draft amidship under paragraph (b)(1) of this section, in association with a trim, in meters, by the stern (t) of no more than ''t'' in the following mathematical relationship:

t=0.015L for vessels of 150 meters or more in length

t=1.5+0.005L for vessels less than 150 meters in length

(3) The minimum draft at the after perpendicular is that which is necessary to obtain full immersion of the propeller.

(c) Special ballast arrangements are accepted under the procedures in paragraph (d) of this section if:

(1) The vessel is dedicated to one specific route;

(2) Each offshore transfer facility on the route is less than 50 miles from shore;

(3) The duration of the ballast voyage is less than 10 hours;

(4) They prevent the mixing of ballast water and oil; and

(5) They provide suitable draft and trim to allow for the safe navigation of the vessel on the intended route.

(d) The owner or operator of a vessel that meets paragraph (c) of this section must apply for acceptance of the special ballast arrangement, in writing, to the Officer in Charge, Marine Inspection, of the zone in which the vessel operates. The application must contain:

(1) The specific route on which the vessel would operate;

(2) The type of ballast to be carried;

(3) The location of the ballast on the vessel;

(4) Calculations of draft and trim for maximum ballast conditions; and

(5) The associated operating requirements or limitations necessary to ensure safe navigation of the vessel.

NOTE: Operating requirements or limitations necessary to ensure safe navigation of the vessel could include (but are not limited to) weather conditions under which the vessel would not operate and weather conditions under which cargo would be carried in certain cargo tanks on the ballast voyage.

(e) The Coast Guard will inform each applicant for special ballast arrangements under paragraph (d) of this section whether or not the arrangements are accepted. If they are not accepted, the reasons why they are not accepted will be stated.

(f) Each tank vessel under this section may be designed to carry ballast water in cargo tanks, as allowed under § 157.35.

[CGD 79–152, 45 FR 82249, Dec. 15, 1980]

§ 157.10c Segregated ballast tanks, crude oil washing systems, and dedicated clean ballast tanks for certain new and existing tankships of 20,000 to 40,000 DWT.

(a) This section applies to each tankship of 20,000 DWT or more, but less then 40,000 DWT, except each one that—

(1) Is constructed under a building contract awarded after June 1, 1979;

(2) In the absence of a building contract, has the keel laid or is at a similar stage of construction after January 1, 1980;

(3) Is delivered after June 1, 1982; or

(4) Has undergone a major conversion, for which—

(i) The contract is awarded after June 1, 1979; or

(ii) Conversion is completed after June 1, 1982.

(b) On January 1, 1986, or 15 years after the date it was delivered to the original owner or 15 years after the completion of a major conversion, whichever is later, a vessel under this section that carries crude oil must have—

(1) Segregated ballast tanks that have a total capacity to allow the vessel to meet the draft and trim requirements in § 157.09(b); or

(2) A crude oil washing system that meets the design, equipment, and installation requirements of §§ 157.122 through 157.138.

(c) On January 1, 1986, or 15 years after the date it was delivered to the original owner or 15 years after the completion of a major conversion, whichever is later, a vessel under this section that carries product must have—

(1) Segregated ballast tanks that have total capacity to allow the vessel to meet the draft and trim requirements in § 157.09(b); or

(2) Dedicated clean ballast tanks that meet the design and equipment requirements under §§ 157.220, 157.222, and 157.224 and have total capacity to allow the vessel to meet the draft and trim requirements in § 157.09(b).

(d) If the arrangement of tanks on a vessel under this section is such that, when using the tankage necessary to comply with the draft and trim requirements in § 157.09(b), the draft amidships exceeds the minimum required draft by more the 10 percent, or the arrangement results in the propeller being fully immersed by more than 10 percent of its diameter, alternative arrangements may be accepted provided—

(1) At least 80 percent of the propeller diameter is immersed; and

(2) The moulded draft amidships is at least 80 percent of that required under § 157.09(b)(1).

[CGD 82–28, 50 FR 11626, Mar. 22, 1985; 50 FR 12800, Apr. 1, 1985]

§ 157.10d Double hulls on tank vessels.

(a) With the exceptions stated in § 157.08(n), this section applies to a tank vessel—

(1) For which the building contract is awarded after June 30, 1990;

(2) That is delivered after December 31, 1993;

(3) That undergoes a major conversion for which;

(i) The contract is awarded after June 30, 1990; or

(ii) Conversion is completed after December 31, 1993; or

(4) That is otherwise required to have a double hull by 46 U.S.C. 3703a(c).

NOTE: The double hull compliance dates of 46 U.S.C. 3703a(c) are set out in appendix G to this part. To determine a tank vessel's double hull compliance date under OPA 90, use the vessel's hull configuration (*i.e.*, single hull; single hull with double sides; or single hull with double bottom) on August 18, 1990.

(b) Each vessel to which this section applies must be fitted with:

(1) A double hull in accordance with this section; and

(2) If § 157.10 applies, segregated ballast tanks and a crude oil washing system in accordance with that section.

(c) Except on a vessel to which § 157.10d(d) applies, tanks within the cargo tank length that carry any oil must be protected by double sides and a double bottom as follows:

(1) Double sides must extend for the full depth of the vessel's side or from the uppermost deck, disregarding a rounded gunwale where fitted, to the top of the double bottom. At any cross section, the molded width of the double side, measured at right angles to the side shell plating, from the side of tanks containing oil to the side shell plating, must not be less than the distance w as shown in Figure 157.10d(c) and specified as follows:

(i) For a vessel of 5,000 DWT and above: w=[0.5+(DWT/20,000)] meters; or, w=2.0 meters (79 in.), whichever is less, but in no case less than 1.0 meter (39 in.).

(ii) For a vessel of less than 5,000 DWT: w=[0.4+(2.4)(DWT/20,000)] meters, but in no case less than 0.76 meter (30 in.).

(iii) For a vessel to which paragraph (a)(4) of this section applies: w=0.76 meter (30 in.), provided that the double

side was fitted under a construction or conversion contract awarded prior to June 30, 1990.

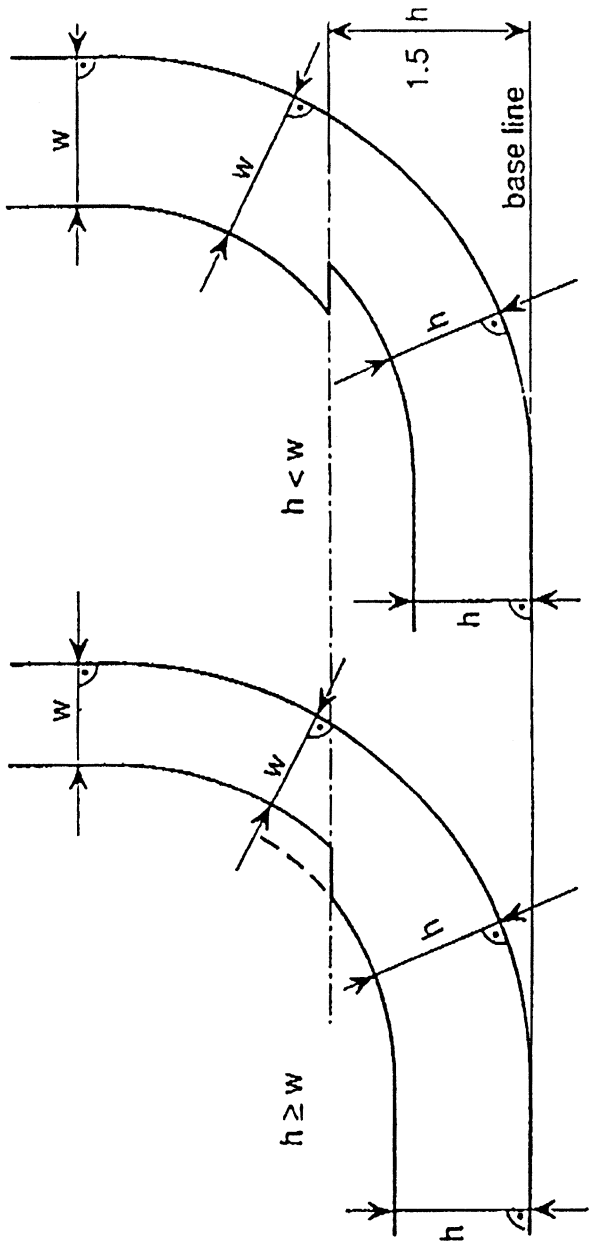

FIGURE 157.10d(c) Minimum Double Hull Dimensions

(2) At any cross section, the molded depth of the double bottom, measured at right angles to the bottom shell plating, from the bottom of tanks containing oil to the bottom shell plating, must not be less than the distance *h* as shown in Figure 157.10d(c) and specified as follows:

(i) For a vessel of 5,000 DWT and above: *h*=B/15; or, *h*=2.0 meters (79 in.), whichever is less, but in no case less than 1.0 meter (39 in.).

(ii) For a vessel of less than 5,000 DWT: *h*=B/15, but in no case less than 0.76 meter (30 in.).

(iii) For a vessel to which paragraph (a)(4) of this section applies: *h*=B/15; or, *h*=2.0 meters (79 in.), whichever is the lesser, but in no case less than 0.76 meter (30 in.), provided that the double bottom was fitted under a construction or conversion contract awarded prior to June 30, 1990.

(3) For a vessel built under a contract awarded after September 11, 1992, within the turn of the bilge or at cross sections where the turn of the bilge is not clearly defined, tanks containing oil must be located inboard of the outer shell—

(i) For a vessel of 5,000 DWT and above: At levels up to 1.5*h* above the base line, not less than the distance *h*, as shown in Figure 157.10d(c) and specified in paragraph (c)(2) of this section. At levels greater than 1.5*h* above the base line, not less than the distance *w*, as shown in Figure 157.10d(c) and specified in paragraph (c)(1) of this section.

(ii) For a vessel of less than 5,000 DWT: Not less than the distance *h* above the line of the mid-ship flat bottom, as shown in Figure 157.10d(c)(3)(ii) and specified in paragraph (c)(2) of this section. At levels greater than *h* above the line of the mid-ship flat bottom, not less than the distance *w*, as shown in Figure 157.10d(c)(3)(ii) and specified in paragraph (c)(1) of this section.

Figure 157.10d(c)(3)(ii) - Minimum Double Hull Dimensions Within the Turn of the Bilge of Vessels Under 5,000 DWT

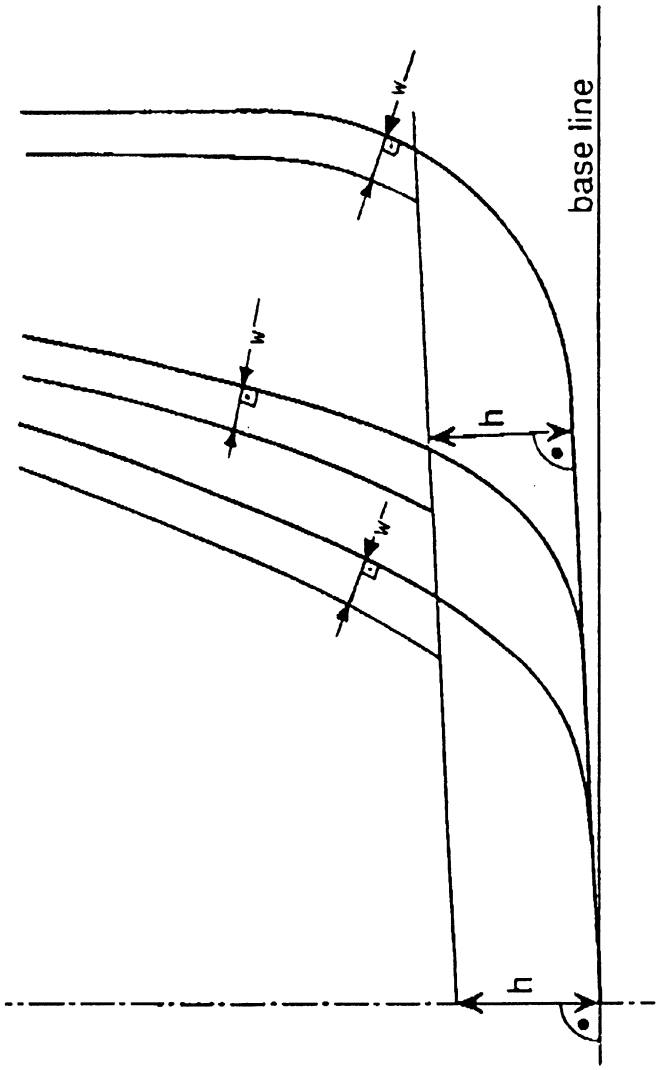

(4) For a vessel to which § 157.10(b) applies that is built under a contract awarded after September 11, 1992.

(i) The aggregate volume of the double sides, double bottom, forepeak tanks, and afterpeak tanks must not be less than the capacity of segregated

ballast tanks required under § 157.10(b). Segregated ballast tanks that may be provided in addition to those required under § 157.10(b) may be located anywhere within the vessel.

(ii) Double side and double bottom tanks used to meet the requirements of § 157.10(b) must be located as uniformly as practicable along the cargo tank length. Large inboard extensions of individual double side and double bottom tanks, which result in a reduction of overall side or bottom protection, must be avoided.

(d) A vessel of less than 10,000 DWT that is constructed and certificated for service exclusively on inland or limited short protected coastwise routes must be fitted with double sides and a double bottom as follows:

(1) A minimum of 61 cm. (2 ft.) from the inboard side of the side shell plate, extending the full depth of the side or from the main deck to the top of the double bottom, measured at right angles to the side shell; and

(2) A minimum of 61 cm. (2 ft.) from the top of the bottom shell plating, along the full breadth of the vessel's bottom, measured at right angles to the bottom shell.

(3) For a vessel to which paragraph (a)(4) of this section applies, the width of the double sides and the depth of the double bottom may be 38 cm. (15 in.), in lieu of the dimensions specified in paragraphs (d)(1) and (d)(2) of this section, provided that the double side and double bottom tanks were fitted under a construction or conversion contract awarded prior to June 30, 1990.

(4) For a vessel built under a contract awarded after September 11, 1992, a minimum 46 cm. (18 in.) clearance for passage between framing must be maintained throughout the double sides and double bottom.

(e) Except as provided in paragraph (e)(3) of this section, a vessel must not carry any oil in any tank extending forward of:

(1) The collision bulkhead; or

(2) In the absence of a collision bulkhead, the transverse plane perpendicular to the centerline through a point located:

(i) The lesser of 10 meters (32.8 ft.) or 5 percent of the vessel length, but in no case less than 1 meter (39 in.), aft of the forward perpendicular;

(ii) On a vessel of less than 10,000 DWT tons that is constructed and certificated for service exclusively on inland or limited short protected coastwise routes, the lesser of 7.62 meters (25 ft.) or 5 percent of the vessel length, but in no case less than 61 cm. (2 ft.), aft of the headlog or stem at the freeboard deck; or

(iii) On each vessel which operates exclusively as a box or trail barge, 61 cm. (2 ft.) aft of the headlog.

(3) This paragraph does not apply to independent fuel oil tanks that must be located on or above the main deck within the areas described in paragraphs (e)(1) and (e)(2) of this section to serve adjacent deck equipment that cannot be located further aft. Such tanks must be as small and as far aft as is practicable.

(f) On each vessel, the cargo tank length must not extend aft to any point closer to the stern than the distance equal to the required width of the double side, as prescribed in § 157.10d(c)(1) or § 157.10d(d)(1).

[CGD 90–051, 57 FR 36239, Aug. 12, 1992, as amended by USCG–1999–6164, 65 FR 39262, June 23, 2000]

§ 157.11 Pumping, piping and discharge arrangements.

(a) Each tank vessel must have a fixed piping system for transferring oily mixtures from cargo tanks to slop tanks and for discharging oily mixtures to the sea and to reception facilities. On a vessel that has two or more independent piping arrangements, the arrangements collectively form the fixed piping system required by this paragraph.

(b) Each fixed piping system required by paragraph (a) of this section must have:

(1) At least two manifolds on the weather deck for transferring oily mixtures to reception facilities, one of which is on the port side of the vessel and one of which is on the starboard side; and

(2) Except as provided in paragraph (c) of this section, at least one discharge point that:

(i) Is used for discharges to the sea;

(ii) Is on a port or starboard weather deck or on the vessel's side above the waterline of its deepest ballast condition; and

(iii) Has an automatic stop valve that is actuated by an oil content meter signal, except that manual valves may be provided on new vessels of less than 4,000 tons deadweight and on existing vessels.

(c) An above waterline discharge point is not required on an existing vessel if its fixed piping system meets paragraphs 3 and 4 of appendix E of this part.

(d) Each tank vessel under § 157.09, § 157.10a, or § 157.10b that carries crude oil must have:

(1) Equipment that drains each cargo pump and oil piping line of oil residue;

(2) Oil piping lines for the draining of oil residue from cargo pumps and other oil piping lines to a cargo tank or a slop tank; and

(3) An oil piping line that meets paragraph (f) of this section and is connected to the cargo discharge piping on the outboard side of the manifold valves for the draining of oil residue from cargo pumps and other oil piping lines to a receptacle on the shore.

(e) Each tank vessel under § 157.10 must have:

(1) Oil piping lines that are designed and installed to minimize oil retention in those lines;

(2) Equipment that drains each cargo pump and oil piping line of oil residue;

(3) Oil piping lines for the draining of oil residue from cargo pumps and other oil piping lines to a cargo tank or slop tank; and

(4) An oil piping line that meets paragraph (f) of this section and is connected to the cargo discharge piping on the outboard side of the manifold valves for the draining of oil residue from cargo pumps and other oil piping lines to a receptacle on the shore.

(f) Each oil piping line under paragraph (d)(3) or (e)(4) of this section must have a cross-sectional area of 10 percent or less of the cross-sectional area of the main cargo discharge piping line, except if the oil piping line under paragraph (d)(3) of this section is installed before January 1, 1980, that piping line may have a cross-sectional area of 25 percent or less of the cross-sectional area of the main cargo discharge piping line.

(g) Each tank vessel to which § 157.10d applies that is built under a contract awarded after September 11, 1992 must be arranged so that:

(1) Except for short lengths of completely welded (or equivalent) piping,

(i) Ballast piping and other piping to ballast tanks, such as sounding and vent piping, do not pass through cargo tanks, and

(ii) Cargo piping and other piping to cargo tanks do not pass through ballast tanks;

(2) Suction wells in cargo tanks that protrude into the double bottom are as small as practicable and extend no closer to the bottom shell plating than $0.5h$, as specified in § 157.10d(c)(2) or § 157.10d(d)(2), as applicable; and

(3) On a vessel that is constructed and certificated for service exclusively on inland, Great Lakes, or limited short protected coastwise routes, any oil piping that is located within double hull spaces must be placed as far from the outer shell as is practicable and must be fitted with valves at the point of connection to the tank served, to prevent oil outflow in the event of damage to the piping. Such valves must be closed whenever the vessel is underway with any oil in tanks served by the associated piping, except as necessary during transfer operations.

NOTE: Piping location requirements for an oceangoing vessel are in § 157.19(d). Related operating requirements are in § 157.45.

[CGD 74–32, 40 FR 48283, Oct. 14, 1975, as amended by CGD 80–78, 45 FR 43704, June 30, 1980; CGD 77–058b, 45 FR 43708, June 30, 1980; CGD 79–152, 45 FR 82250, Dec. 15, 1980; CGD 76–088b, 48 FR 45720, Oct. 6, 1983; CGD 90–051, 57 FR 36244, Aug. 12, 1992; USCG–2000–7641, 66 FR 55573, Nov. 2, 2001; USCG–2004–18939, 74 FR 3378, Jan. 16, 2009]

§ 157.12 Oil discharge monitoring and control system.

(a) Each vessel must have an oil discharge monitoring and control system (monitoring system) that is designed for use with each type of cargo oil that the vessel carries.

(b) Each oil content meter component of the monitoring system installed on a U.S. vessel must be approved under 46 CFR part 162, subpart

162.050. Each oil content meter component of the monitoring system installed on a foreign vessel must be approved:

(1) Under 46 CFR part 162, subpart 162.050; or

(2) As meeting IMO Marine Environment Protection Committee resolution MEPC.108(49) by a country that has ratified the MARPOL 73/78. Paragraph 1.2.2 of MEPC.108(49) provides, as to equipment installed in ''oil tankers the keels of which are laid, or which are at a similar stage of construction, before January 1, 2005,'' for alternative compliance with IMO resolutions A.393(X), A.496(XII), MEPC.13(19), and A.586(14). These five resolutions are incorporated by reference (*see* § 157.02).

(c) Each oil discharge monitoring and control system on a U.S. vessel must be installed in accordance with §§ 157.12b through 157.12g of this part.

[USCG–2004–18939, 74 FR 3378, Jan. 16, 2009]

§ 157.12a Definitions.

As used in §§ 157.12a through 157.12g—

Control section means a unit in a monitoring system composed of the items specified in § 157.12d(a)(4)(viii).

Control unit means a device that receives automatic signals of oil content of the effluent ppm, flow rate of discharge m^3/hour, ship's speed in knots, ship's position-latitude and longitude, date and time (GMT, Greenwich Mean Time), and status of the overboard discharge control. The control unit makes automatic recordings of data as specified in § 157.12d(h)(2).

Oil discharge monitoring and control system or *monitoring system* means a system that monitors the discharge into the sea of oily ballast or other oil-contaminated water from the cargo tank areas and comprises the items specified in § 157.12d(a)(4).

Overboard discharge control means a device that automatically initiates the sequence to stop the overboard discharge of the effluent in alarm conditions and prevents the discharge throughout the period the alarm condition prevails. The device may be arranged to close the overboard valves or to stop the relevant pumps, as appropriate.

PPM means parts of oil per million parts of water by volume.

Starting interlock means a facility that prevents the initiation of the opening of the discharge valve or the operation of other equivalent arrangements before the monitoring system is fully operational when use of the monitoring system is required by the Convention.

[USCG–2004–18939, 74 FR 3379, Jan. 16, 2009]

§ 157.12b Implementation requirements.

Oil discharge monitoring and control systems must be fitted to oil tankers to which this subpart applies. A monitoring and control system must employ a control unit and be fitted with a starting interlock and overboard discharge control.

[USCG–2004–18939, 74 FR 3379, Jan. 16, 2009]

§ 157.12c Construction, maintenance, security, calibration, and training.

(a) The oil discharge monitoring and control system must be designed to ensure that user access is restricted to essential controls. Access beyond these controls must be available for emergency maintenance and temporary repair but must require the breaking of security seals or activation of another device, which indicates an entry to the equipment.

(b) The seals must be of a design that only the manufacturer or the manufacturer's agent can replace the seals or reset the system following inspection and permanent repairs to the equipment.

(c) The accuracy of the monitoring system must be verified during International Oil Pollution Prevention certificate renewal surveys. The calibration certificate certifying date of last calibration check must be retained on board for inspection purposes.

(d) The monitoring system may have several scales as appropriate for its intended use. The recording device fitted to a meter which has more than one scale must indicate the scale which is in use.

(e) Simple means must be provided aboard ship to check on instrument drift, repeatability of the instrument reading, and the ability to re-zero the instrument.

(f) Ship staff training must include familiarization in the operation and the maintenance of the equipment.

(g) The routine maintenance of the monitoring system and trouble-shooting procedures must be clearly defined in the Operating and Maintenance Manual. All routine maintenance and repairs must be recorded.

[USCG–2004–18939, 74 FR 3379, Jan. 16, 2009]

§ 157.12d Technical specifications.

(a) *Oil discharge monitoring and control system.* (1) The monitoring system must be capable of effectively monitoring and controlling the discharge of any effluent into the sea through those overboard discharge outlets permitted by § 157.11 that are necessary to fulfill the operational requirements of the oil tanker.

(2) The discharge of dirty ballast water or other oil-contaminated water from the cargo tank areas into the sea through outlets, which are not controlled by the monitoring system is prohibited.

(3) The monitoring system must function effectively under all environmental conditions normally encountered by oil tankers, and must be designed and constructed to satisfy the specifications for approval in 46 CFR subpart 162.050. Moreover—

(i) The system must be designed so a discharge of dirty-ballast or other oil-contaminated water from the cargo tank areas cannot take place unless the monitoring system is in the normal operating mode and the relevant sampling point has been selected;

(ii) The system should sample the effluent discharge from a minimum number of discharge outlets and be arranged so that discharge overboard can take place via only one outlet at a time;

(iii) Where it is intended that more than one line be used for simultaneous discharging purposes, one oil content meter, together with a flow meter, must be installed in each discharge line. These instruments must be connected to a common processor; and

(iv) To avoid alarms because of short-term high-oil-concentration signals (spikes) causing indications of high instantaneous rates of discharge, the short-term high ppm signal may be suppressed for a maximum of 10 seconds. Alternatively, the instantaneous rate of discharge may be continuously averaged during the preceding 20 seconds or less as computed from instantaneous ppm values of the oil content meter readings received at intervals not exceeding 5 seconds.

(4) The monitoring system must comprise—

(i) An oil content meter to measure the oil content of the effluent in ppm. The meter must be approved in accordance with the provisions contained in 46 CFR subpart 162.050 and certified to take into account the range of cargoes carried;

(ii) A flow rate indicating system to measure the rate of effluent being discharged into the sea;

(iii) A ship speed indicating device to give the ship's speed in knots;

(iv) A ship position indicating device to give the ship's position-latitude and longitude;

(v) A sampling system to convey a representative sample of the effluent to the oil content meter;

(vi) An overboard discharge control to stop the overboard discharge;

(vii) A starting interlock to prevent the discharge overboard of any effluent unless the monitoring system is fully operational; and

(viii) A control section comprising—

(A) A processor that accepts signals of oil content in the effluent, the effluent flow rate, and the ship's speed, and computes these values into liters of oil discharged per nautical mile and the total quantity of oil discharged;

(B) A means to provide alarms and command signals to the overboard discharge control;

(C) A recording device to provide a record of data required under § 157.12d(h)(2);

(D) A data display to exhibit the current operational data required under § 157.12d(i);

(E) A manual override system to be used in the event of failure of the monitoring system;

(F) A means to provide signals to the starting interlock to prevent the discharge of any effluent before the monitoring system is fully operational; and

(G) The control section of the monitoring system must be tested in accordance with the vibration testing requirements described in 46 CFR 162.050–37.

(5) Each main component of the monitoring system must be fitted with a name plate, properly identifying the component by assembly drawing number, type or model number, and serial number, as appropriate.

(6) The electrical components of the monitoring system that are to be installed in an explosive atmosphere must be in compliance with 46 CFR 162.050–25.

(7) Each main component of the monitoring system must be designed in accordance with the applicable requirements contained in subchapters F and J.

(b) *Sampling system.* (1) Sampling points must be located so relevant samples can be obtained from those outlets used for operational discharges in accordance with paragraph (a) of this section. The sampling probes located in the overboard discharge lines and the piping system connecting the sampling probes to the oil content meter must meet the requirements of this paragraph.

(2) The piping and probes must be—

(i) Of a material resistant to fire, corrosion, and oil; and

(ii) Of adequate strength and properly jointed and supported.

(3) The system must have a stop-valve fitted adjacent to each probe, except that, where the probe is mounted in a cargo line, two stop-valves must be fitted, in series, in the sample line. One of these may be the remote controlled sample selector valve.

(4) Sampling probes must be arranged for easy withdrawal and must, as far as practicable, be mounted at an accessible location in a vertical section of the discharge line. Should it be necessary to fit sampling probes in a horizontal section of the discharge line it must be ascertained, during the installation survey, that the pipe runs full of liquid at all times during the discharge of the effluent. Sampling probes must normally penetrate inside the discharge pipe to a distance of one quarter the diameter of that pipe.

(5) Means must be provided for cleaning the probes and piping system by the provision of permanent clean water flushing arrangements or an equivalent method. The design of the probes and piping must be such as to minimize their clogging by oil, oily residue, and other matter.

(6) The velocity of the fluid in the piping must be such that, taking into consideration the length of the piping, the overall response time must be as short as possible between an alteration in the mixture being pumped and the alteration in the oil content meter reading. In no case should the response time, including the response time of the oil content meter, be more than 40 seconds.

(7) The location of sampling probes in relation to any point of flow diversion to a slop tank must be selected with regard to the need for sampling the oily water in the recirculation mode.

(8) The arrangements for driving the sampling pump or any other pumps used in the system must account for the safety requirements of the space in which the pump is located. Any bulkhead penetration between a hazardous and a non-hazardous area must be of a design meeting the requirements of 46 CFR 32.60–20 and 46 CFR subpart 111.105.

(9) The flushing arrangement must be such that where necessary it can be utilized for test-running and stabilizing the oil content meter and correcting for zero setting.

(10) Sample water returning to the slop tank must not be allowed to free-fall into the tank. In tankers equipped with an inert gas system, a water seal meeting the requirements of 46 CFR 32.53–10(b) must be arranged in the piping leading to a slop tank.

(11) A valve must be provided for the manual collection of samples from the inlet piping to the oil content meter at a point downstream of any sampling pump.

(c) *Flow rate indicating system.* (1) A flow meter for measuring the rate of discharge must be installed in a vertical section of a discharge line or in any other section of a discharge line as appropriate, so as to be always filled with the liquid being discharged.

(2) A flow meter must employ an operating principle which is suitable for shipboard use and, where relevant, can be used in large diameter pipes.

(3) A flow meter must be suitable for the full range of flow rates that may be encountered during normal operation. Alternatively, arrangements such as the use of two flow meters of different ranges or a restriction of the operational flow rate range may be employed if necessary to meet this requirement.

(4) The flow meter, as installed, must have an accuracy of ±10 percent, or better, of the instantaneous rate of discharge throughout the operating range for discharging the effluent.

(5) Any component part of the flow meter in contact with the effluent should be of corrosion-resistant and oil-resistant material of adequate strength.

(6) The design of the flow metering arrangements must account for the safety requirements of the space in which such metering arrangements are located.

(d) *Ship's speed indicating system.* The automatic speed signal required for a monitoring system must be obtained from the ship's speed indicating device by means of a repeater signal. The speed information used may be either speed over the ground or speed through the water, depending upon the speed measuring equipment installed on board.

NOTE TO PARAGRAPH (d): See ''Recommendation on Performance Standards for Devices to Indicate Speed and Distance,'' Annex to resolution A.824(19) as amended by resolution MSC.96(72).

(e) *Ship position indicating device.* The ship position indicating device must consist of a receiver for a global navigation satellite system, a terrestrial radio navigation system, or other means suitable for use at all times throughout the intended voyage to establish and update the ship's position by automatic means.

(f) *Overboard discharge control management.* The overboard discharge control must be able to stop the discharge of the effluent into the sea automatically by either closing all relevant overboard discharge valves or stopping all relevant pumps. The discharge control arrangement must be fail-safe so that all effluent discharge is stopped when the monitoring system is not in operation, at alarm conditions, or when the monitoring system fails to function.

(g) *Processor and transmitting device.* (1) The processor of a control section must receive signals from the oil content meter, the flow rate indicating system and the ship's speed indicating system at time intervals not exceeding 5 seconds and must automatically compute the following:

(i) Instantaneous rate of discharge of oil in liters per nautical mile; and

(ii) Total quantity of oil discharged during the voyage in cubic meters or liters.

(2) When the limits imposed by §157.37(a)(3) and (4) are exceeded, the processor must provide alarms and provide command signals to the overboard discharge control arrangement, which will cause the discharge of effluent into the sea to stop.

(3) The processor must normally include a device for the continuous generation of time and date information. Alternative arrangements that ensure the automatic and continuous reception of time and date information from an external source may be approved by the Marine Safety Center.

(4) In the event of power failure the processor must retain its memory in respect to computation of the total quantity of oil discharged, time, and date. A printout of data must be obtained when the monitoring system is operating with manual override, but the printout of data is not required if, when the power fails, the monitoring system activates the overboard discharge control to stop the discharge of effluent.

(h) *Recording devices.* (1) The recording device of a control section must include a digital printer, which may be formatted electronically. The recorded parameters must be explicitly identified on the printout. The printout must be legible and must remain so once removed from the recording device and must be retained for at least 3 years.

(2) The data to be automatically recorded must include at least the following:

(i) Instantaneous rate of discharge of oil (liters per nautical mile);

(ii) Instantaneous oil content (ppm);

(iii) The total quantity of oil discharged (cubic meters or liters);

(iv) Time and date (GMT, Greenwich Mean Time);

(v) Ship's speed in knots;

(vi) Ship's position—latitude and longitude;

(vii) Effluent flow rate;

(viii) Status of the overboard discharge control or arrangement;

(ix) Oil type selector setting, where applicable;

(x) Alarm condition;

(xi) Failure, including, but not limited to, fault or no flow; and

(xii) Override action, including, but not limited to, manual override, flushing, and calibration. Any information inserted manually as a result of an override action must be identified as such on the printout.

(3) Data required in paragraph (h)(2) of this section must be printed out or may be stored electronically with printout capability, with the following minimum frequency:

(i) When the discharge is started;

(ii) When the discharge is stopped;

(iii) At intervals of not more than 10 minutes (except when the system is in stand-by mode);

(iv) When an alarm condition develops;

(v) When normal conditions are restored;

(vi) Whenever the computed rate of discharge varies by 10 liters per nautical mile;

(vii) When zero-setting or calibration modes are selected; and

(viii) On manual command.

(4) The recording device must be located in a position easily accessible to the person in charge of the overboard discharge operation.

(i) *Data display*. (1) In addition to the recorded printout, the current data must be visibly displayed and at a minimum contain the following:

(i) Instantaneous rate of discharge of oil (liters per nautical mile);

(ii) Total quantity of oil discharged (cubic meters or liters);

(iii) Instantaneous oil content (ppm);

(iv) Flow rate;

(v) Ship's speed; and

(vi) Status of the overboard discharge control or arrangement.

(2) The data display must be located in a position easily observed by the person in charge of the overboard discharge operation.

(j) *Manually operated alternatives in the event of equipment malfunction*. Acceptable alternative means of obtaining information in the event of a failure in the monitoring system include the following:

(1) Oil content meter or sampling system: Visual observation of the surface of the water adjacent to the effluent discharge;

(2) Flow meter: Pump discharge characteristics;

(3) Ship's speed indicating device: Main engine rpm;

(4) Processor: Manual calculation and manual recording; and

(5) Overboard discharge control: manual operation of pumps and valves.

(k) *Alarm conditions resulting in the stopping of discharge*. Audio-visual alarms must be activated for any of the following conditions and the monitoring system must be so arranged that the discharge of effluent into the sea is stopped:

(1) Whenever the instantaneous rate of discharge of oil exceeds 30 liters per nautical mile;

(2) When the total quantity of oil discharged reaches 1/30,000 of the previous cargo for new vessels and 1/15,000 for existing vessels; or

(3) In the event of failure of the system's operation, such as:

(i) Power failure;

(ii) Loss of sample;

(iii) Significant failure of the measuring or recording system; or

(iv) When the input of any sensor exceeds the effective capacity of the system.

(l) *Location of alarm indicator*. The alarm indicator of the system must be installed in the cargo control room, where provided, and/or in other places where it will attract immediate attention and action.

[USCG–2004–18939, 74 FR 3379, Jan. 16, 2009]

§ 157.12e Certificate of approval.

(a) A copy of the certificate of approval for the oil content meters must be carried aboard an oil tanker fitted with such equipment at all times.

(b) A certificate of type approval must be issued for the specific application for which the oil content meter is approved, that is, for crude oil, ''black'' products, ''white'' products, or other products or applications as listed on the certificate.

[USCG–2004–18939, 74 FR 3379, Jan. 16, 2009]

§ 157.12f Workshop functional test requirements.

(a) Each oil content meter and each control section of a monitoring system must be subjected to a functional test on a suitable test bench prior to delivery. The detailed program for a functional test of such equipment must be developed by the manufacturer, taking into account the features and functions of the specific design of equipment. A completed workshop certificate including the delivery test protocol must be received with each unit delivered.

(b) A functional test conducted on an oil content meter must include the following operations:

(1) A check of flow rate, pressure drop, or an equivalent parameter as appropriate;

(2) A check of all alarm functions built into the meter;

(3) A check of all switching functions interconnecting with other parts of the system; and

(4) A check for correct reading at several ppm values on all measurement scales when operated on an oil appropriate for the application of the oil content meter or by an equivalent method.

(c) A functional check conducted on a control section of a monitoring system must include the following operations:

(1) A check of all alarm functions;

(2) A check of the correct function of the signal processor and the recording equipment when simulated input signals of ppm, flow rate, and speed are varied;

(3) A check that the alarm is activated when the input signals are varied to exceed the discharge limits contained in § 157.37(a)(3) and (4);

(4) A check that a signal is given to the overboard discharge control when alarm conditions are reached; and

(5) A check that the alarm is activated when each one of the input signals is varied to exceed the capacity of the system.

[USCG–2004–18939, 74 FR 3379, Jan. 16, 2009]

§ 157.12g Plan approval requirements.

Adequate documentation must be prepared well in advance of the intended installation of a monitoring system and must be submitted to the Marine Safety Center for approval. The following documentation must be submitted:

(a) *A description of the monitoring system.* The description must include a diagram of the pumping and piping arrangements identifying the operational outlets for dirty ballast and oil-contaminated water from the cargo-tank area and compatible with the operational requirements set out in the oil tanker's cargo and ballast handling manuals. Special considerations will be given to installations in oil tankers, which have unusual pumping and piping arrangements.

(b) Equipment manuals, supplied by manufacturers, which must contain details of the major components of the monitoring system.

(c) An operations and technical manual for the complete monitoring system which is proposed to be installed in the oil tanker. This manual must cover the arrangements and operation of the system as a whole and must specifically describe parts of the system, which are not covered by the manufacturer's equipment manuals.

(d) The operations section of the manual must include normal operational procedures and procedures for the discharge of oily water in the event of malfunction of the equipment.

(e) The technical section of the manual must include adequate information (description and diagram of the pumping and piping arrangements of the monitoring system and electrical/electronic wiring diagrams) to enable fault finding and must include instructions for keeping a maintenance record.

(f) A technical installation specification defining, among other things, the location and mounting of components, arrangements for maintaining the integrity of the boundary between safe and hazardous spaces, and the arrangement of the sample piping, including calculation of the sample response

time referred to in § 157.12d(b)(6). The installation must comply with manufacturer's specific installation criteria.

(g) A copy of the certificate of type approval for the oil content meter.

(h) Technical documentation relevant to other main components of the monitoring system. This documentation must include the vibration report for the control section of the monitoring section.

(i) A recommended test and checkout procedure specific to the monitoring system installed. This procedure must specify all the checks to be carried out in a functional test by the installation contractor and must provide guidance for the surveyor when carrying out the onboard survey of the monitoring system and confirming the installation reflects the manufacturer's specific installation criteria.

[USCG–2004–18939, 74 FR 3379, Jan. 16, 2009]

§ 157.13 Designated observation area.

Each new vessel must have a designated observation area on the weather deck or above that is:

(a) Located where the effluent from each discharge point and manifold described in § 157.11 can be visually observed; and

(b) Equipped with:

(1) A means to directly stop the discharge of effluent into the sea; or

(2) A positive communication system, such as a telephone or a radio, between the observation area and the discharge control position.

[CGD 74–32, 40 FR 48283, Oct. 14, 1975, as amended by CGD 76–088b, 48 FR 45720, Oct. 6, 1983]

§ 157.15 Slop tanks in tank vessels.

(a) *Number*. A tank vessel must have the following number of slop tanks that comply with the requirements of this section:

(1) A new vessel of less than 70,000 tons DWT and an existing vessel must have at least one slop tank.

(2) A new vessel of 70,000 tons DWT or more must have at least two slop tanks.

(b) *Capacity*. Slop tanks must have the total capacity to retain oily mixtures from cargo tank washings, oil residue, and ballast water containing an oily mixture of 3 percent or more of the oil carrying capacity. Two percent capacity is allowed if there are—

(1) Segregated ballast tanks that meet the requirements in § 157.09, § 157.10, § 157.10a, or § 157.10b; or

(2) No eductors arrangements that use water in addition to the washing water.

(c) *Design*. A slop tank required in this section:

(1) Must minimize turbulence, entrainment of oil, and the creation of an emulsion by the use of separate inlet and outlet connections; and

(2) May carry bulk oil when not being used as a slop tank.

[CGD 74–32, 40 FR 48283, Oct. 14, 1975]

EDITORIAL NOTE: For FEDERAL REGISTER citations affecting § 157.15, see the List of CFR Sections Affected, which appears in the Finding Aids section of the printed volume and at *www.fdsys.gov*.

§ 157.17 Oil residue (sludge) tank.

(a) A tank vessel of 400 gross tons or more must have a tank that receives and holds oil residue resulting from purification of fuel and lubricating oil and from oil leakages in machinery spaces.

(b) Each oil residue (sludge) tank required in paragraph (a) of this section must have an adequate capacity that is determined by the:

(1) Type of machinery installed on the vessel; and

(2) Maximum fuel oil capacity.

(c) Each oil residue (sludge) tank on a new vessel must be designed to facilitate:

(1) Cleaning; and

(2) Discharging to a reception facility.

[CGD 74–32, 40 FR 48283, Oct. 14, 1975, as amended by CGD 80–78, 45 FR 43704, June 30, 1980; USCG–2000–7641, 66 FR 55573, Nov. 2, 2001]

§ 157.19 Cargo tank arrangement and size.

(a) This section applies to:

(1) A U.S. or foreign vessel that is delivered after January 1, 1977;

(2) A U.S. vessel that is delivered before January 1, 1977, for which the building contract is awarded after January 1, 1972, or, if there is no building contract, the keel is laid or the vessel

is at a similar stage of construction after June 30, 1972; and

(3) A foreign vessel that is delivered before January 1, 1977, for which the building contract is awarded after January 1, 1974, or, if there is no building contract, the keel is laid or the vessel is at a similar stage of construction after June 30, 1974.

(b) As determined in accordance with the procedures contained in appendix A of this part, each cargo tank must be of such size and arrangement that:

(1) The hypothetical outflow for side damage (O_c) or for bottom damage (O_s) anywhere within the length of the vessel must not exceed O_A (30,000 cubic meters or $(400)\times(3\sqrt{\ }\ DWT)$ whichever is greater, limited to a maximum of 40,000 cubic meters);

(2) The volume of each wing tank and center tank is less than the allowable volume of a wing tank (VOL_W) and the allowable volume of a center tank (VOL_C) respectively; and

(3) The length of a tank is less than the allowable length of a tank (l_a).

(c) If a cargo transfer system interconnects two or more cargo tanks, the system must have valves to segregate the tanks from each other.

(d) If a line of piping that runs through a cargo tank in a position less than t_c from the vessel's side or less than v_s from the vessel's bottom as defined in appendix A of this part, has a branch, that branch must have a stop valve:

(1) Within each cargo tank into which the branch opens; or

(2) Outside each tank into which the branch opens in a location that is immediately adjacent to the point at which the branch enters the tank.

(e) If piping that serves suction wells is installed within a double bottom, that piping must be:

(1) Fitted with valves located at the point of connection to the tank served to prevent oil outflow in the event of damage to the piping; and

(2) Designed to be installed as high from the bottom shell as possible.

[CGD 74–32, 40 FR 48283, Oct. 14, 1975, as amended by CGD 75–240, 41 FR 54180, Dec. 13, 1976; CGD 76–088b, 48 FR 45720, Oct. 6, 1983; USCG–2000–7223, 65 FR 40058, June 29, 2000]

§ 157.21 Subdivision and stability.

A new vessel that is a U.S. vessel must meet the following subdivision and damage stability criteria after assuming side and bottom damages, as defined in appendix B of this part. A U.S. vessel that meets the requirements in this section is considered by the Coast Guard as meeting 46 CFR 42.20–5.

(a) The final waterline, taking into account sinkage, heel, and trim, must be below the lower edge of an opening through which progressive flooding may take place, such as an air pipe, or any opening that is closed by means of a weathertight door or hatch cover. This opening does not include an opening closed by a:

(1) Watertight manhole cover;

(2) Flush scuttle;

(3) Small watertight cargo tank hatch cover that maintains the high integrity of the deck;

(4) Remotely operated watertight sliding door; or

(5) Side scuttle of the non-opening type.

(b) In the final stage of flooding, the angle of heel due to unsymmetrical flooding must not exceed 25 degrees, except that this angle may be increased to 30 degrees if no deck edge immersion occurs.

(c) For acceptable stability in the final stage of flooding, the righting lever curve must have a range of at least 20 degrees beyond the position of equilibrium in association with a maximum residual righting lever of at least 0.1 meter. For the calculations required in this section, weathertight openings or openings fitted with automatic closures (e.g., a vent fitted with a ball check valve), need not be considered as points of downflooding within the range of residual stability, but other openings must be accounted for in the calculation.

[CGD 74–32, 40 FR 48283, Oct. 14, 1975, as amended by CGD 75–240, 41 FR 54180, Dec. 13, 1976]

§ 157.22 Intact stability requirements.

All tank ships of 5,000 DWT and above contracted after December 3, 2001 must comply with the intact stability

requirements of Regulation 27, Annex I MARPOL 73/78.

[USCG–2000–7641, 66 FR 55573, Nov. 2, 2001, as amended by USCG–2009–0416, 74 FR 27441, June 10, 2009]

§ 157.23 Cargo and ballast system information.

(a) Each tank vessel to which this part applies must have an instruction manual that describes the automatic and manual operation of the cargo and ballast system in the vessel.

(b) The format and information contained in the instruction manual required in paragraph (a) of this section must be similar to the manual entitled ''Clean Seas Guide for Oil Tankers'' which can be obtained from the International Chamber of Shipping, 30–32 St. Mary Axe, London, England, EC3A 8ET.

§ 157.24 Submission of calculations, plans, and specifications.

The owner, builder or designer of a new vessel to which this part applies shall submit the documentation specified in this section to the Coast Guard before that vessel enters the navigable waters of the United States. The owner, builder, or designer of a vessel that must comply with § 157.10d shall submit the documentation specified in this section to the Coast Guard before that vessel enters the navigable waters of the United States or the U.S. Exclusive Economic Zone.

(a) Calculations to substantiate compliance with the tank arrangement and size requirements under § 157.19, or a letter from the government of the vessel's flag state that certifies compliance with:

(1) Section 157.19; or

(2) Regulations 24 of Annex I of the International Convention for the Prevention of Pollution from Ships, 1973.

(b) Except for a new vessel that is a foreign vessel, calculations to substantiate compliance with subdivisions and damage stability requirements under § 157.21.

(c) Plans and calculations to substantiate compliance with the applicable segregated ballast and double hull requirements in § 157.09, § 157.10, § 157.10a, § 157.10b, or § 157.10d, or certification from the government of the vessel's flag state that the vessel complies with the segregated ballast and double hull requirements in:

(1) Sections 157.09, 157.10, 157.10a, 157.10b, or 157.10d, as applicable; or

(2) For a vessel to which § 157.10d does not apply, Regulations 13 and 13E of the MARPOL 73/78.

(d) Plans and specifications for the vessel that include:

(1) Design characteristics;

(2) A lines plan;

(3) Curves of form (hydrostatic curves) or hydrostatic tables;

(4) A general arrangement plan of each deck and level;

(5) Inboard and outboard profile plans showing oiltight and watertight bulkheads;

(6) A midship section plan;

(7) A capacity plan showing the capacity and the vertical and longitudinal centers of gravity of each cargo space, tank, and similar space;

(8) Tank sounding tables or tank capacity tables;

(9) Draft mark locations;

(10) Detailed plans of watertight doors; and

(11) Detailed plans of vents.

[CGD 75–240, 41 FR 54180, Dec. 13, 1976, as amended by CGD 77–058b, 45 FR 43708, June 30, 1980; CGD 79–152, 45 FR 82250, Dec. 15, 1980; CGD 90–051, 57 FR 36244, Aug. 12, 1992; USCG–2000–7641, 66 FR 55573, Nov. 2, 2001]

§ 157.24a Submission of calculations, plans, and specifications for existing vessels installing segregated ballast tanks.

(a) Before modifications are made to a U.S. tank vessel to meet § 157.10a(a)(1), § 157.10a(c)(1), § 157.10c(b)(1), or § 157.10c(c)(1), the vessel's owner or operator must submit the following to the Officer in Charge, Marine Inspection, of the zone where the modification will be made or to the appropriate Coast Guard technical office listed in 157.100(b):

(1) A drawing or diagram of the pumping and piping system for the segregated ballast tanks.

(2) A drawing of the segregated ballast tank arrangement.

(3) Documentation, calculations, or revised stability information to show that the vessel, with the addition of the segregated ballast tanks, meets the stability standards for load line assignment in 46 CFR Part 42.

(4) Documentation, calculations, or a revised loading manual to show that the vessel, with the addition of the segregated ballast tanks, meets the structural standards in 46 CFR Part 32.

(5) Plans and calculations to show that the vessel, as modified, complies with the segregated ballast capacity and distribution requirements in § 157.10a.

(b) Before each foreign vessel under § 157.10a(a)(1) or § 157.10a(c)(1) enters the navigable waters of the United States, the owner or operator of that vessel must—

(1) Submit to the Commandant (CG–543), U.S. Coast Guard, Washington, D.C. 20593–0001—

(i) A letter from the authority that assigns the load line to the vessel finding that the location of the segregated ballast tanks is acceptable; and

(ii) Plans and calculations to substantiate compliance with the segregated ballast capacity requirements in § 157.09(b); or

(2) Submit to the Officer in Charge, Marine Inspection, of the zone in which the first U.S. port call is made, a letter or document from the government of vessel's flag state certifying that the vessel complies with the segregated ballast capacity requirements in § 157.09(b) or Regulation 13 of the MARPOL 73/78.

(c) On January 1, 1986, or 15 years after the date it was delivered to the original owner, or 15 years after the completion of a major conversion, whichever is later, before that vessel enters the navigable waters of the United States, the owner or operator of an existing foreign vessel under § 157.10c(b)(1) or § 157.10c(c)(1) must—

(1) Submit to the Commandant (CG–543), U.S. Coast Guard, Washington, D.C. 20593–0001—

(i) A letter from the authority that assigns the load line to the vessel finding that the location of the segregated ballast tanks is acceptable; and

(ii) Plans and calculations to substantiate compliance with the applicable segregated ballast capacity requirements in § 157.09(b) or § 157.10c(d); or

(2) Submit to the Officer in Charge, Marine Inspection, of the zone in which the first U.S. port call is made a letter from an authorized CS or the government of the vessel's flag state certifying that the vessel complies with the segregated ballast capacity requirements in § 157.09(b) or § 157.10c(d).

(Reporting and Recordkeeping requirements approved by the Office of Management and Budget under control number 1625–0036)

[CGD 82–28, 50 FR 11626 and 11630, Mar. 22, 1985, as amended by CGD 88–052, 53 FR 25122, July 1, 1988; CGD 96–026, 61 FR 33668, June 28, 1996; USCG–2000–7641, 66 FR 55573, Nov. 2, 2001; USCG–2006–25150, 71 FR 39210, July 12, 2006]

Subpart C—Vessel Operation

§ 157.25 Applicability of subpart C.

(a) This subpart applies to each vessel to which this part applies of 150 gross tons or more, unless otherwise indicated, that carries crude oil or products in bulk as cargo. This subpart does not apply to a foreign vessel which remains beyond the navigable waters of the United States and does not transfer oil cargo at a port or place subject to the jurisdiction of the United States.

(b) Sections 157.29, 157.31, 157.37(a)(5), 157.37(a)(6) and 157.43 apply to foreign vessels when they discharge into the navigable waters of the United States.

(c) Sections 157.35, 157.37, except paragraphs (a)(5) and (a)(6), 157.39, 157.45, and 157.47 do not apply to foreign vessels.

[CGD 76–088b, 48 FR 45720, Oct. 6, 1983, as amended by CGD 90–051, 57 FR 36244, Aug. 12, 1992]

§ 157.26 Operation of a tank vessel in violation of regulations.

No person may cause or authorize the operation of a tank vessel in violation of the regulations in this part.

[CGD 77–058b, 45 FR 43708, June 30, 1980]

§ 157.27 Discharges: Tank vessels carrying oil exclusively on rivers, lakes, bays, sounds, and the Great Lakes, and seagoing tank vessels of less than 150 gross tons.

Unless a tank vessel carrying oil exclusively on rivers, lakes, bays, sounds, and the Great Lakes, or a seagoing tank vessel of less than 150 gross tons discharges clean ballast or segregated ballast, the vessel must:

(a) Retain on board any oily mixture; or

(b) Transfer an oily mixture to a reception facility.

§ 157.28 Discharges from tank barges exempted from certain design requirements.

The person in charge of a tank barge exempted under § 157.08(g) from the requirements in §§ 157.11, 157.13, 157.15, and 157.23 shall ensure that while the barge is proceeding en route:

(a) Cargo tanks are not ballasted or washed; and

(b) Oil or oily mixtures are not discharged.

[CGD 74–32, 40 FR 48283, Oct. 14, 1975, as amended by CGD 76–088b, 48 FR 45721, Oct. 6, 1983; CGD 90–051, 57 FR 36244, Aug. 12, 1992]

§ 157.29 Discharges: Seagoing tank vessels of 150 gross tons or more.

Unless a seagoing tank vessel of 150 gross tons or more discharges an oily mixture in compliance with the requirements in § 157.37, § 157.39, or § 157.43, the vessel must:

(a) Retain the mixture; or

(b) Transfer the mixture to a reception facility.

§ 157.31 Discharges: Chemical additives.

No person may use a chemical additive to circumvent the discharge requirements in §§ 157.27, 157.29, 157.37, 157.39, and 157.43.

§ 157.33 Water ballast in fuel oil tanks.

A new vessel may not carry ballast water in a fuel oil tank.

[CGD 74–32, 40 FR 48283, Oct. 14, 1975, as amended by USCG–2000–7641, 66 FR 55573, Nov. 2, 2001]

§ 157.35 Ballast added to cargo tanks.

The master of a tank vessel with segregated ballast tanks or dedicated clean ballast tanks under § 157.09, § 157.10, § 157.10a(a)(1), § 157.10a(b), § 157.10a(c), § 157.10b(a), § 157.10c(b)(1), or § 157.10c(c) shall ensure that ballast water is carried in a cargo tank only if—

(a) The vessel encounters abnormally severe weather conditions;

(b) More ballast water than can be carried in segregated ballast tanks or dedicated clean ballast tanks is necessary for the safety of the vessel;

(c) The ballast water is processed and discharged in compliance with § 157.37; and

(d) On a new vessel under § 157.10 that carries crude oil, the ballast water is only carried in a cargo tank that is crude oil washed in accordance with Subpart D of this part during or after the most recent discharge of crude oil from that tank.

[CGD 77–058b, 45 FR 43708, June 30, 1980, as amended by CGD 82–28, 50 FR 11626, Mar. 22, 1985]

§ 157.37 Discharge of oily mixtures from oil cargoes.

(a) A tank vessel may not discharge an oily mixture into the sea from a cargo tank, slop tank, or cargo pump room bilge unless the vessel:

(1) Is more than 50 nautical miles from the nearest land;

(2) Is proceeding en route;

(3) Is discharging at an instantaneous rate of oil content not exceeding 30 liters per nautical mile;

(4) Is an existing vessel and the total quantity of oil discharged into the sea does not exceed 1/15,000 of the total quantity of the cargo that the discharge formed a part, or is a new vessel and the total quantity of oil discharged into the sea does not exceed 1/30,000 of the total quantity of the cargo that the discharge formed a part;

(5) Discharges:

(i) Through the above waterline discharge point described in § 157.11(b)(2);

(ii) In accordance with paragraph 5 of appendix E to this part, if the vessel is an existing vessel with a Part Flow System meeting that appendix; or

(iii) Below the waterline in accordance with paragraph (e) of this section;

(6) Has in operation an oil discharge monitoring and control system required by § 157.12 that is designed for use with the oily mixture being discharged, except that the system may be operated manually if:

(i) The automatic system fails during a ballast voyage;

(ii) The failure is recorded in the Oil Record Book;

(iii) The master ensures that the discharge is constantly monitored visually and promptly terminated when oil is detected in the discharge; and

(iv) The system is operated manually only until the ballast voyage is completed; and

(7) Is outside the ''Special Areas'' defined in Regulation 1.11 of Annex I to the MARPOL 73/78.

(b) A seagoing tank vessel of 150 gross tons or more that carries asphalt or other products whose physical properties inhibit effective product/water separation and monitoring must transfer all oil cargo residues and tank washings from such cargoes to a reception facility.

(c) Each oil discharge monitoring and control system must be maintained and operated in accordance with its instructions manual.

(d) All discharge data recorded by an oil discharge monitoring and control system must be retained for at least three years. The data for the most recent year must be retained on board the vessel.

(e) Ballast water containing an oily mixture may be discharged below the waterline at sea by gravity if—

(1) The ballast is not from a slop tank;

(2) Examination with an oil-water interface detector shows that oil-water separation has taken place; and

(3) The oil layer is high enough in the tank so that it will not be discharged.

(The information collection requirement contained in paragraph (d) of this section was approved by the Office of Management and Budget under control number 1625–0041)

[CGD 74–32, 40 FR 48283, Oct. 14, 1975, as amended by CGD 76–088b, 48 FR 45721, Oct. 6, 1983; USCG–2000–7641, 66 FR 55573, Nov. 2, 2001; USCG–2006–25150, 71 FR 39210, July 12, 2006; USCG–2008–0179, 73 FR 35015, June 19, 2008; USCG–2004–18939, 74 FR 3382, Jan. 16, 2009]

§ 157.39 Machinery space bilges.

(a) A tank vessel may discharge an oily mixture from a machinery space bilge that is combined with an oil cargo residue if the vessel discharges in compliance with § 157.37.

(b) A tank vessel may discharge an oily mixture from a machinery space bilge that is not combined with an oil cargo residue if the vessel:

(1) Is proceeding en route;

(2) Is discharging an effluent with an oil content of less than 15 parts per million; and

(3) Has in operation an oil discharge monitoring and control system in compliance with § 157.12 and oil separating equipment in compliance with 33 CFR 155.380.

[CGD 74–32, 40 FR 48283, Oct. 14, 1975, as amended by USCG–2000–7641, 66 FR 55573, Nov. 2, 2001; USCG–2004–18939, 74 FR 3382, Jan. 16, 2009]

§ 157.41 Emergencies.

Sections 157.27, 157.29, 157.37, and 157.39 do not apply to a tank vessel that discharges into the sea oil or oily mixtures:

(a) For the purpose of securing the safety of the vessel or for saving life at sea; or

(b) As a result of damage to the vessel or its equipment if:

(1) Reasonable precautions are taken after the occurrence of the damage or discovery of the discharge for the purpose of preventing or minimizing the discharge; and

(2) The owner, master or person in charge did not intend to cause damage, or did not act recklessly and with knowledge that damage of the environment would probably result.

§ 157.43 Discharges of clean and segregated ballast: Seagoing tank vessels of 150 gross tons or more.

(a) Clean ballast may not be discharged overboard unless the discharge is verified as clean ballast through use of an approved oil discharge monitoring and control system or, if discharged before the required oil discharge monitoring and control system installation date, by visual examination of the ballast contents immediately before discharge. This paragraph applies to discharges of clean ballast:

(1) From dedicated clean ballast tanks; and

(2) Into the navigable waters of the United States from any other tank.

(b) Segregated ballast may not be discharged overboard unless a visual examination, or a test of the ballast

contents with an oil/water interface detector, immediately before the discharge shows that there is no oily mixture in the ballast. Use of an oil discharge monitoring and control system is not required. This paragraph applies to discharges of segregated ballast:

(1) Into the navigable waters of the United States; and

(2) Below the waterline at sea from an existing vessel that does not have an above the waterline discharge point for segregated ballast.

(c) All discharges of clean ballast and segregated ballast must be through an above waterline discharge point described in § 157.11(b)(2), except that:

(1) A vessel may discharge clean ballast and segregated ballast below the waterline when in port or at an offshore terminal.

(2) A vessel may discharge clean ballast and segregated ballast at sea by gravity below the waterline.

(3) An existing vessel that does not have above waterline discharge points for dedicated clean ballast tanks may discharge clean ballast from those tanks below the waterline at sea.

(4) An existing vessel that does not have above waterline discharge points for segregated ballast tanks may discharge segregated ballast below the waterline at sea.

(d) This section applies only to seagoing tank vessels of 150 gross tons or more.

[CGD 76–088b, 48 FR 45721, Oct. 6, 1983; 48 FR 46985, Oct. 17, 1983; USCG–2000–7641, 66 FR 55573, Nov. 2, 2001; USCG–2004–18939, 74 FR 3382, Jan. 16, 2009]

§ 157.45 Valves in cargo or ballast piping system.

When a tank vessel is at sea and the tanks contain oil, valves and closing devices in the cargo or ballast piping system or in the transfer system must be kept closed except they may be opened for cargo or ballast transfer to trim the vessel.

§ 157.47 Information for master.

A master or person in charge of a new vessel shall operate the vessel in accordance with the information required in 46 CFR 31.10–30(d) that includes the following:

(a) Stability information.

(b) Damage stability information determined in accordance with the criteria contained in appendix B of this part.

(c) Loading and distribution of cargo information determined in compliance with the damage stability criteria required in appendix B of this part.

[CGD 74–32, 40 FR 48283, Oct. 14, 1976, as amended by CGD 75–240, 41 FR 54180, Dec. 13, 1976]

§ 157.49 Instruction manual.

The master of a tank vessel shall ensure that the instruction manual under § 157.23 is available and used when the cargo or ballast systems are operated.

Subpart D—Crude Oil Washing (COW) System on Tank Vessels

SOURCE: CGD 77–058b, 45 FR 43709, June 30, 1980, unless otherwise noted.

GENERAL

§ 157.100 Plans for U.S. tank vessels: Submission.

(a) Before each U.S. tank vessel having a COW system under § 157.10(e), § 157.10a(a)(2), or § 157.10c(b)(2) is inspected under § 157.140, the owner or operator of that vessel must submit to the Coast Guard plans that include—

(1) A drawing or diagram of the COW pumping and piping system that meets 46 CFR 56.01–10(d);

(2) The design of each COW machine;

(3) The arrangement, location, and installation of the COW machines; and

(4) Except as allowed in § 157.104, the projected direct impingement pattern of crude oil from the nozzles of the COW machines on the surfaces of each tank, showing the surface areas not reached by direct impingement.

(b) Plans under paragraph (a) of this section must be submitted to the Officer in Charge, Marine Inspection, of the zone in which the COW system is installed or to the Commanding Officer, U.S. Coast Guard Marine Safety

Center, 2100 2nd St. SW., Stop 7102, Washington, DC 20593–7102.

(Reporting and Recordkeeping requirements approved by the Office of Management and Budget under control number 1625–0036)

[CGD 77–058b, 45 FR 43709, June 30, 1980, as amended by CGD 82–28, 50 FR 11626 and 11630, Mar. 22, 1985; CDG 85–048a, 51 FR 15481, Apr. 24, 1986; USCG–1998–3799, 63 FR 35531, June 30, 1998; USCG–2006–25150, 71 FR 39210, July 12, 2006; USCG–2008–0179, 73 FR 35015, June 19, 2008; USCG–2010–0351, 75 FR 36286, June 25, 2010]

§ 157.102 Plans for foreign tank vessels: Submission.

If the owner or operator of a foreign tank vessel having a COW system under § 157.10(e), § 157.10a(a)(2), or § 157.10c(b)(2), desires the letter from the Coast Guard under § 157.106 accepting the plans submitted under this paragraph, the owner or operator must submit to the Commandant (CG–543), U.S. Coast Guard, 2100 2nd St. SW., Stop 7581, Washington, DC 20593–7581, plans that include—

(a) A drawing or diagram of the COW pumping and piping system that meets 46 CFR 56.01–10(d);

(b) The design of each COW machine;

(c) The arrangement, location, and installation of the COW machines; and

(d) Except as allowed in § 157.104, the projected direct impingement pattern of crude oil from the nozzles of the COW machines on the surfaces of each tank, showing the surface areas not reached by direct impingement.

(Reporting and Recordkeeping requirements approved by the Office of Management and Budget under control number 1625–0036)

[CGD 77–058b, 45 FR 43709, June 30, 1980, as amended by CGD 82–28, 50 FR 11627 and 11630, Mar. 22, 1985; CGD 88–052, 53 FR 25122, July 1, 1988; CGD 96–026, 61 FR 33668, June 28, 1996; USCG–2006–25150, 71 FR 39210, July 12, 2006; USCG–2010–0351, 75 FR 36286, June 25, 2010]

§ 157.104 Scale models.

If the pattern under § 157.100(a)(4) or § 157.102(d) cannot be shown on a plan, a scale model of each tank must be built for Coast Guard inspection to simulate, by a pinpoint of light, the projected direct impingement pattern on the surfaces of the tank.

§ 157.106 Letter of acceptance.

The Coast Guard informs the submitter by letter that the plans submitted under § 157.100 or § 157.102 are accepted if:

(a) The plans submitted show that the COW system meets this subpart; or

(b) The plans submitted and the scale model under § 157.104 show that the COW system meets this subpart.

§ 157.108 Crude Oil Washing Operations and Equipment Manual for U.S. tank vessels: Submission.

Before each U.S. tank vessel having a COW system under § 157.10(e), § 157.10a(a)(2), or § 157.10c(b)(2) is inspected under § 157.140, the owner or operator of that vessel must submit two copies of a manual that meets § 157.138, to the Officer in Charge, Marine Inspection, of the zone in which the COW system is installed or to the appropriate Coast Guard field technical office listed in § 157.100(b).

(Reporting and Recordkeeping requirements approved by the Office of Management and Budget under control number 1625–0036)

[CGD 82–28, 50 FR 11627, 11630, Mar. 22, 1985, as amended by USCG–2006–25150, 71 FR 39210, July 12, 2006]

§ 157.110 Crude Oil Washing Operations and Equipment Manual for foreign tank vessels: Submission.

If the owner or operator of a foreign tank vessel having a COW system under § 157.10(e), § 157.10a(a)(2), or § 157.10c(b)(2) desires a Coast Guard approved *Crude Oil Washing Operations and Equipment Manual* under § 157.112, the owner or operator must submit two copies of a manual that meets § 157.138 to the Commandant (CG–543), U.S. Coast Guard, Washington, DC 20593–1000.

(Reporting and Recordkeeping requirements approved by the Office of Management and Budget under control number 1625–0036)

[CGD 82–28, 50 FR 11627 and 11630, Mar. 22, 1985, as amended by CGD 88–052, 53 FR 25122, July 1, 1988; CGD 96–026, 61 FR 33668, June 28, 1996; USCG–2006–25150, 71 FR 39210, July 12, 2006]

§ 157.112 Approved Crude Oil Washing Operations and Equipment Manual.

If the manuals submitted under § 157.108 or § 157.110 meet § 157.138, the

Coast Guard approves the manuals and forwards one of the approved manuals to the submitter.

§ 157.114 Crude Oil Washing Operations and Equipment Manual: Not approved.

If the manuals submitted under § 157.108 or § 157.110 are not approved, the Coast Guard forwards a letter to the submitter with the reasons why the manuals were not approved.

§ 157.116 Required documents: U.S. tank vessels.

The owner, operator, and master of a U.S. tank vessel having a COW system under § 157.10(e), § 157.10a(a)(2), or § 157.10c(b)(2) shall ensure that the vessel does not engage in a voyage unless the vessel has on board the following:

(a) The *Crude Oil Washing Operations and Equipment Manual* that—

(1) Is approved under § 157.112; or

(2) Bears a certification by an authorized CS that the manual contains the information required under § 157.138.

(b) Evidence of acceptance of the tank vessel's COW system consisting of—

(1) A document from an authorized CS that certifies the vessel meets § 157.10c(b)(2) and each amending letter by the authorized CS approving changes in the design, equipment, or installation; or

(2) The letter of acceptance under § 157.106 and each amending letter issued under § 157.158(c).

(c) Evidence that the COW system passed the required inspections by—

(1) A document from an authorized CS that the vessel has passed the inspections under § 157.140; or

(2) The letter of acceptance under § 157.142 after passing the inspection under § 157.140.

(Reporting and Recordkeeping requirements approved by the Office of Management and Budget under control number 1625–0036)

[CGD 82–28, 50 FR 11627 and 11630, Mar. 22, 1985, as amended by USCG–2006–25150, 71 FR 39210, July 12, 2006]

§ 157.118 Required documents: Foreign tank vessels.

(a) The owner, operator, and master of a foreign tank vessel under § 157.10(e) or § 157.10a(a)(2) shall ensure that the vessel does not enter the navigable waters of the United States or transfer cargo at a port or place subject to the jurisdiction of the United States unless the vessel has on board—

(1) The *Crude Oil Washing Operations and Equipment Manual* that—

(i) Is approved under § 157.112; or

(ii) Meets the manual standards in Resolution 15 of the MARPOL 73/78 and bears the approval of the government of the vessel's flag state; and

(2) Either—

(i) A document from the government of the vessel's flag state that certifies that the vessel complies with Resolution 15 of the MARPOL 73/78; or

(ii) The following letters issued by the Coast Guard:

(A) The letter of acceptance issued under § 157.106.

(B) The letter of acceptance issued under § 157.142.

(C) Each amending letter issued under § 157.158(c).

(b) On January 1, 1986, or 15 years after the date it was delivered to the original owner or 15 years after the completion of a major conversion, whichever is later, the owner, operator, and master of a foreign vessel having a COW system under § 157.10c(b)(2) shall ensure that the vessel does not enter the navigable waters of the United States or transfer cargo at a port or place subject to the jurisdiction of the United States unless the vessel has on board—

(1) The *Crude Oil Washing Operations and Equipment Manual* that—

(i) Is approved under § 157.112; or

(ii) Bears a certification by an authorized CS or the government of the vessel's flag state that the manual contains the information required under § 157.138;

(2) Evidence that the COW system passed the required inspections by—

(i) A document from an authorized CS or the government of the vessel's flag state certifying that the vessel passed the inspections under § 157.140; or

(ii) The letter of acceptance under § 157.142 after passing the inspection under § 157.140; and

(3) Either—

(i) A document from an authorized CS or the government of the vessel's flag state certifying that the vessel complies with the design, equipment and installation standards in §§ 157.122 through 157.136 and any amending letters approving changed COW system characteristics; or

(ii) The letter of acceptance under § 157.106 and any amending letters issued under § 157.158(c).

(Reporting and Recordkeeping requirements approved by the Office of Management and Budget under control number 1625–0036)

[CGD 82–28, 50 FR 11627 and 11630, Mar. 22, 1985, as amended by USCG–2000–7641, 66 FR 55573, Nov. 2, 2001; USCG–2006–25150, 71 FR 39210, July 12, 2006]

§ 157.120 Waiver of required documents.

The Coast Guard waives the requirement for the letter under § 157.116(b), if a U.S. tank vessel engages in a voyage, or under § 157.118(b)(2)(ii), if a foreign tank vessel enters the navigable waters of the United States or transfers cargo at a port or place subject to the jurisdiction of the United States, for the purpose of being inspected under § 157.140.

DESIGN, EQUIPMENT, AND INSTALLATION

§ 157.122 Piping, valves, and fittings.

(a) Except as allowed in paragraph (o) of this section, the piping, valves, and fittings of each COW system must:

(1) Meet 46 CFR Part 56; and

(2) Be of steel or an equivalent material accepted by the Commandant.

(b) The piping of each COW system must be permanently installed.

(c) The piping of each COW system must be separate from other piping systems on the vessel, except that the vessel's cargo piping may be a part of the COW piping if the cargo piping meets this section.

(d) The piping of each COW system must have overpressure relief valves or other means accepted by the Commandant to prevent overpressure in the piping of the COW system, unless the maximum allowable working pressure of that system is greater than the shut-off head of each pump that meets § 157.126(b).

(e) Each overpressure relief valve must discharge into the suction side of a pump that meets § 157.126(b).

(f) The piping and equipment of a COW system may not be in machinery spaces.

(g) Each hydrant valve for water washing in the piping of a COW system must:

(1) Have adequate strength to meet 46 CFR Part 56 for the working pressure for which the system is designed; and

(2) Be capable of being blanked off.

(h) Each sensing instrument must have an isolating valve at its connection to the piping of the COW system, unless the opening to that connection is 0.055 inches (1.4 millimeters) or smaller.

(i) If the washing system for cargo tanks has a steam heater used when water washing, it must be located outside the engine room and must be capable of being isolated from the piping of the COW system by:

(1) At least two shut-off valves in the inlet piping and at least two shut-off valves in the outlet piping; or

(2) Blank flanges identifiable as being closed (e.g., spectacle flanges).

(j) If the COW system has a common piping system for oil washing and water washing, that piping system must be designed to drain the crude oil into a slop tank or a cargo tank.

(k) The piping of a COW system must be securely attached to the tank vessel's structure with pipe anchors.

(l) When COW machines are used as pipe anchors, there must be other means available for anchoring the piping if these machines are removed.

(m) There must be a means to allow movement of the COW system piping as a result of thermal expansion and flexing of the tank vessel.

(n) The supply piping attached to each deck mounted COW machine and each COW machine that is audio inspected under § 157.155(a)(4)(ii) must have a shut-off valve.

(o) On combination carriers, piping of the COW system installed between each COW machine located in a cargo tank hatch cover and an adjacent location just outside the hatch coaming, may be flexible hose with flanged connections that is acceptable by the Commandant.

§ 157.124 COW tank washing machines.

(a) COW machines must be permanently mounted in each cargo tank.

(b) The COW machines in each tank must have sufficient nozzles with the proper diameter, working pressure, movement, and timing to allow the tank vessel to pass the inspections under § 157.140.

(c) Each COW machine and its supply piping must be supported to withstand vibration and pressure surges.

(d) There must be one portable drive unit available on board the vessel for every three COW machines that use portable drive units during COW operations required by § 157.160 before each ballast voyage.

(e) Except as allowed in paragraph (f) of this section, each cargo tank must have COW machines located to wash all horizontal and vertical areas of the tank by direct impingement, jet deflection, or splashing to allow the tank vessel to pass the inspections under § 157.140. The following areas in each tank must not be shielded from direct impingement by large primary structural members or any other structural member determined to be equivalent to a large primary structural member by the Commandant when reviewing the plans submitted under § 157.100 or § 157.102:

(1) 90 percent or more of the total horizontal area of the:

(i) Tank bottom;

(ii) Upper surfaces of large primary structural members; and

(iii) Upper surfaces of any other structural member determined to be equivalent to a large primary structural member by the Commandant.

(2) 85 percent or more of the total vertical area of the tank sides and swash bulkheads.

(f) Each cargo tank on a vessel having a COW system under § 157.10a(a)(2) or § 157.10c(b)(2) with complicated internal structural members does not have to meet paragraph (e) of this section if the following areas of each cargo tank are washed by direct impingement and the tank vessel can pass the inspections under § 157.140:

(1) 90 percent or more of the total horizontal area of all the:

(i) Tank bottoms;

(ii) Upper surfaces of large primary structural members; and

(iii) Upper surfaces of any other structural member determined to be equivalent to a large primary structural member by the Commandant.

(2) 85 percent or more of the total vertical area of all the tank sides and swash bulkheads.

(g) Each single nozzle COW machine that is mounted to the deck must have a means located outside of the cargo tank that indicates the arc and rotation of the movement of the COW machine during COW operations.

(h) Each multi-nozzle COW machine that is mounted to the deck must have a means located outside of the cargo tank that indicates the movement of the COW machine during COW operations.

(i) Each COW machine mounted to or close to the bottom of a tank without a means located outside of the cargo tank that indicates movement of the machine must not be programmable.

NOTES: 1. In the calculations to meet § 157.124 (e) or (f), areas that are shielded from direct impingement by structural members other than large primary structural members or swash bulkheads can be calculated as areas being washed by direct impingement.

2. One or more types of COW machines could be used to meet § 157.124 (e) or (f).

[CGD 77–058b, 45 FR 43709, June 30, 1980, as amended by CGD 82–28, 50 FR 11627, Mar. 22, 1985]

§ 157.126 Pumps.

(a) Crude oil must be supplied to the COW machines by COW system pumps or cargo pumps.

(b) The pumps under paragraph (a) of this section must be designed and arranged with sufficient capacity to meet the following:

(1) A sufficient pressure and flow is supplied to allow the simultaneous operation of those COW machines designed to operate simultaneously.

(2) If an eductor is used for tank stripping, enough driving fluid is provided by the pumps to allow the eductor to meet § 157.128(a).

(c) There must be means on the tank vessel to maintain the pressure under paragraph (b) of this section when shore terminal back pressure is less

than the pressure under paragraph (b) of this section.

(d) The COW system must have two or more pumps that are capable of supplying oil to the COW machines.

(e) The COW system must be designed to meet the requirements of this subpart with any one pump not operating.

§ 157.128 Stripping system.

(a) Each tank vessel having a COW system under § 157.10(e), § 157.10a(a)(2), or § 157.10c(b)(2) must have a stripping system that is designed to remove crude oil from—

(1) Each cargo tank at 1.25 times the rate at which all the COW machines that are designed to simultaneously wash the bottom of the tank, are operating; and

(2) The bottom of each tank to allow the tank vessel to pass the inspection under § 157.140(a)(2).

(b) Each cargo tank must be designed to allow the level of crude oil in the tank to be determined by:

(1) Hand dipping at the aftermost portion of the tank and three other locations; or

(2) Any other means accepted by the Commandant.

(c) Each stripping system must have at least one of the following devices for stripping oil from each cargo tank:

(1) A positive displacement pump.

(2) A self-priming centrifugal pump.

(3) An eductor

(4) Any other device accepted by the Commandant.

(d) There must be a means in the stripping system piping between the device under paragraph (c) of this section and each cargo tank to isolate each tank from the device.

(e) If the stripping system has a positive displacement pump or a self-priming centrifugal pump, the stripping system must have the following:

(1) In the stripping system piping:

(i) A pressure gauge at the inlet connection to the pump; and

(ii) A pressure gauge at the discharge connection to the pump.

(2) At least one of the following monitoring devices to indicate operation of the pump.

(i) Flow indicator.

(ii) Stroke counter.

(iii) Revolution counter.

(f) If the stripping system has an eductor, the stripping system must have:

(1) A pressure gauge at each driving fluid intake and at each discharge; and

(2) A pressure/vacuum gauge at each suction intake.

(g) The equipment required under paragraphs (e) and (f) of this section must have indicating devices in the cargo control room or another location that is accepted by the Commandant.

[CGD 77–058b, 45 FR 43709, June 30, 1980, as amended by CGD 82–28, 50 FR 11627, Mar. 22, 1985]

§ 157.130 Crude oil washing with more than one grade of crude oil.

If a tank vessel having a COW system under § 157.10(e), § 157.10a(a)(2), or § 157.10c(b)(2) carries more than one grade of crude oil, the COW system must be capable of washing the cargo tanks with the grades of crude oil that the vessel carries.

[CGD 82–28, 50 FR 11627, Mar. 22, 1985]

§ 157.132 Cargo tanks: Hydrocarbon vapor emissions.

Each tank vessel having a COW system under § 157.10a(a)(2) or § 157.10c(b)(2) without sufficient segregated ballast tanks or dedicated clean ballast tanks to allow the vessel to depart from any port in the United States without ballasting cargo tanks must have—

(a) A means to discharge hydrocarbon vapors from each cargo tank that is ballasted to a cargo tank that is discharging crude oil; or

(b) Any other means accepted by the Commandant that prevents hydrocarbon vapor emissions when the cargo tanks are ballasted in port.

[CGD 77–058b, 45 FR 43709, June 30, 1980, as amended by CGD 82–28, 50 FR 11628, Mar. 22, 1985]

§ 157.134 Cargo tank drainage.

Each cargo tank must be designed for longitudinal and transverse drainage of crude oil to allow the tank vessel to pass the inspections under § 157.140.

§ 157.136 Two-way voice communications.

Each tank vessel having a COW system under § 157.10(e), § 157.10a(a)(2), or

§ 157.10c(b)(2) must have a means that enables two-way voice communications between the main deck watch required under § 157.168 and each cargo discharge control station.

[CGD 82–28, 50 FR 11628, Mar. 22, 1985]

§ 157.138 Crude Oil Washing Operations and Equipment Manual.

(a) Each *Crude Oil Washing Operations and Equipment Manual* must include the following information:

(1) The text of the Annex of Resolution 15 of the MARPOL 73/78.

(2) A line drawing of the tank vessel's COW system showing the locations of pumps, piping, and COW machines.

(3) A description of the COW system.

(4) The procedure for the inspection of the COW system during COW operations.

(5) Design characteristic information of the COW system that includes the following:

(i) Pressure and flow of the crude oil pumped to the COW machines.

(ii) Revolutions, number of cycles, and length of cycles of each COW machine.

(iii) Pressure and flow of the stripping suction device.

(iv) Number and location of COW machines operating simultaneously in each cargo tank.

(6) The design oxygen content of the gas or mixture of gases that is supplied by the inert gas system to each cargo tank.

(7) The results of the inspections recorded when passing the inspections under § 157.140.

(8) Characteristics of the COW system recorded during the COW operations when passing the inspections under § 157.140 that includes the following:

(i) Pressure and flow of the crude oil pumped to the COW machines.

(ii) Revolutions, number of cycles, and length of cycles of each COW machine.

(iii) Pressure and flow of the stripping device.

(iv) Number and location of COW machines operating simultaneously in each cargo tank.

(9) The oxygen content of the gas or mixture of gases that is supplied by the inert gas system to each cargo tank recorded during COW operations when passing the inspections under § 157.140.

(10) The volume of water used for water rinsing recorded during COW operations when passing the inspections under § 157.140.

(11) The trim conditions of the tank vessel recorded during COW operations when passing the inspections under § 157.140.

(12) The procedure for stripping cargo tanks of crude oil.

(13) The procedure for draining and stripping the pumps and piping of the COW system, cargo system, and stripping system after each crude oil cargo discharge.

(14) The procedure for crude oil washing cargo tanks that includes the following:

(i) The tanks to be crude oil washed to meet § 157.160.

(ii) The order in which those tanks are washed.

(iii) The single-stage or multi-stage method of washing each tank.

(iv) The number of COW machines that operate simultaneously in each tank.

(v) The duration of the crude oil wash and water rinse.

(vi) The volume of water to be used for water rinse in each tank.

(15) The procedures and equipment needed to prevent leakage of crude oil from the COW system.

(16) The procedures and equipment needed if leakage of crude oil from the COW system occurs.

(17) The procedures for testing and inspecting the COW system for leakage of crude oil before operating the system.

(18) The procedures and equipment needed to prevent leakage of crude oil from the steam heater under § 157.122(i) to the engine room.

(19) The number of crew members needed to conduct the following:

(i) The discharge of cargo.

(ii) The crude oil washing of cargo tanks.

(iii) The simultaneous operations in paragraphs (a)(19) (i) and (ii) of this section.

(20) A description of the duties of each crew member under paragraph (a)(19) of this section.

(21) The procedures for ballasting and deballasting cargo tanks.

(22) The step by step procedure for the inspection of the COW system by vessel personnel before COW operations begin that includes the procedure for inspecting and calibrating each instrument. (Operational Checklist)

(23) The intervals for on board inspection and maintenance of the COW equipment. Informational references to technical manuals supplied by the manufacturers may be included in this part of the manual.

(24) A list of crude oils that are not to be used in COW operations.

(25) The procedure to meet § 157.155(a)(4).

(b) In addition to meeting paragraph (a) of this section, each *Crude Oil Washing Operations and Equipment Manual* on a tank vessel having a COW system under § 157.10a(a)(2) or § 157.10c(b)(2) must include the following:

(1) The procedure to meet § 157.166.

(2) The procedures to meet § 157.155(b).

[CGD 77–058b, 45 FR 43709, June 30, 1980, as amended by CGD 82–28, 50 FR 11628, Mar. 22, 1985; USCG–2000–7641, 66 FR 55573, Nov. 2, 2001]

INSPECTIONS

§ 157.140 Tank vessel inspections.

(a) Before issuing a letter under § 157.142, the Coast Guard makes an initial inspection of each U.S. tank vessel having a COW system under § 157.10(e), § 157.10(a)(2), or § 157.10c(b)(2) and each foreign tank vessel whose owner or operator submitted the plans under § 157.102 to determine whether or not, when entering a port, the cargo tanks that carry crude oil meet the following:

(1) After each tank is crude oil washed but not water rinsed, except the bottom of the tank may be flushed with water and stripped, each tank is essentially free of oil residues to a degree acceptable to the Coast Guard inspector.

(2) After the tanks that are to be used as ballast tanks when leaving the port are crude oil washed and stripped but not water rinsed or bottom flushed, they are filled with water and the total volume of crude oil floating on top of the water in these tanks is 0.085 percent or less of the total volume of these tanks.

(b) Except on a tank vessel under § 157.10(e), if the initial inspection under paragraph (a) of this section has been passed and the vessel arrives at the first cargo loading port after completing a ballast voyage, the Coast Guard monitors the discharge of effluent from those tanks that have been crude oil washed, water rinsed, stripped, and filled with ballast water to determine whether or not the oil content of the effluent is 15 ppm or less.

[CGD 77–058b, 45 FR 43709, June 30, 1980, as amended by CGD 82–28, 50 FR 11628, Mar. 22, 1985; USCG–2000–7641, 66 FR 55573, Nov. 2, 2001]

§ 157.142 Letter of acceptance: Inspections.

If the inspections under § 157.140 are passed, the Coast Guard issues to the tank vessel a letter that states that the vessel complies with this subpart.

§ 157.144 Tank vessels of the same class: Inspections.

(a) If more than one tank vessel is constructed from the same plans, the owner or operator may submit a written request to the Commandant (CG–543), U.S. Coast Guard, 2100 2nd St. SW., Stop 7581, Washington, DC 20593–7581, for only one of those tank vessels to be inspected under § 157.140.

(b) Only one tank vessel of the class is inspected under § 157.140, if the Commandant accepts the request submitted under paragraph (a) of this section.

[CGD 77–058b, 45 FR 43709, June 30, 1980, as amended by CGD 82–28, 50 FR 11630, Mar. 22, 1985; CGD 88–052, 53 FR 25122, July 1, 1988; CGD 96–026, 61 FR 33668, June 28, 1996; USCG–2010–0351, 75 FR 36286, June 25, 2010]

§ 157.146 Similar tank design: Inspections on U.S. tank vessels.

(a) If a U.S. tank vessel has tanks similar in dimensions and internal structure, the owner or operator may submit a written request to the Officer in Charge, Marine Inspection, of the zone in which the COW system is inspected, for only one of those tanks to be inspected under § 157.140(a)(1).

(b) Only one tank of a group of tanks similar in dimensions and internal structure is inspected under § 157.140(a)(1), if the Officer in Charge, Marine Inspection, accepts the request submitted under paragraph (a) of this section.

§ 157.147 Similar tank design: Inspections on foreign tank vessels.

(a) If a foreign tank vessel has tanks similar in dimensions and internal structure, the owner or operator may submit a written request to the Commandant (CG–543), U.S. Coast Guard, 2100 2nd St. SW., Stop 7581, Washington, DC 20593–7581, for only one of those tanks to be inspected under § 157.140(a)(1).

(b) Only one tank of a group of tanks similar in dimensions and internal structure is inspected under § 157.140(a)(1), if the Commandant accepts the request submitted under paragraph (a) of this section.

[CGD 77–058b, 45 FR 43709, June 30, 1980, as amended by CGD 82–28, 50 FR 11630, Mar. 22, 1985; CGD 88–052, 53 FR 25122, July 1, 1988; CGD 96–026, 61 FR 33668, June 28, 1996; USCG–2010–0351, 75 FR 36286, June 25, 2010]

§ 157.148 COW system: Evidence for inspections.

(a) Before the inspections under § 157.140 are conducted by the Coast Guard, the owner or operator of a foreign tank vessel that is to be inspected must submit to the Coast Guard inspector evidence that the COW system has been installed in accordance with the plans accepted under § 157.106.

(b) Before the inspections under § 157.140 are conducted by the Coast Guard, the owner or operator of a tank vessel that is to be inspected must submit to the Coast Guard inspector evidence that the COW piping system has passed a test of 1½ times the design working pressure.

§ 157.150 Crude Oil Washing Operations and Equipment Manual: Recording information after inspections.

After passing the inspections under § 157.140, the owner, operator, and master shall ensure that the following are recorded in the *Crude Oil Washing Operations and Equipment Manual* approved under § 157.112:

(a) The results of the inspections under § 157.140.

(b) The following characteristics used to pass the inspections under § 157.140:

(1) Pressure and flow of the crude oil pumped to the COW machines.

(2) Revolutions, number of cycles, and length of cycles of each COW machine.

(3) Pressure and flow of the stripping suction device.

(4) Number and location of COW machines operating simultaneously in each cargo tank.

(5) Volume of water used for water rinsing.

(6) Trim conditions of the tank vessel.

PERSONNEL

§ 157.152 Person in charge of COW operations.

The owner, operator, and master of a tank vessel having a COW system under § 157.10(e), § 157.10(a)(2), or § 157.10c(b)(2) shall ensure that the person designated as the person in charge of COW operations—

(a) Knows the contents in the *Crude Oil Washing Operations and Equipment Manual* approved by the Coast Guard under § 157.112 or by the government of the vessel's flag state;

(b) On at least two occasions, has participated in crude oil washing of cargo tanks, one of those occasions occurring on:

(1) The tank vessel on which the person assumes duties as the person in charge of COW operations; or

(2) A tank vessel that is similar in tank design and which has COW equipment similar to that used on the tank vessel on which the person assumes duties as the person in charge of COW operations; and

(c) Has one year or more of tank vessel duty that includes oil cargo discharge operations and:

(1) Crude oil washing of cargo tanks; or

(2) Has completed a training program in crude oil washing operations that is approved by the Coast Guard or the government of the vessel's flag state.

NOTE: Standards of a Coast Guard approved training program are to be developed.

[CGD 77–058b, 45 FR 43709, June 30, 1980, as amended by CGD 82–28, 50 FR 11628, Mar. 22, 1985]

§ 157.154 Assistant personnel.

The owner, operator, and master of a tank vessel having a COW system under § 157.10(e), § 157.10a(a)(2), or § 157.10c(b)(2) shall ensure that each member of the crew that has a designated responsibility during COW operations—

(a) Has six months or more of tank vessel duty that includes oil cargo discharge operations;

(b) Has been instructed in the COW operation of the tank vessel; and

(c) Is familiar with the contents of the *Crude Oil Washing Operations and Equipment Manual* approved by the Coast Guard under § 157.112 or by the government of the vessel's flag state.

[CGD 77–058b, 45 FR 43709, June 30, 1980, as amended by CGD 82–28, 50 FR 11628, Mar. 22, 1985]

COW OPERATIONS

§ 157.155 COW operations: General.

(a) The master of a tank vessel having a COW system under § 157.10(e), § 157.10a(a)(2), or 157.10c(b)(2) shall ensure that—

(1) Before crude oil washing a cargo tank, the level in each tank with crude oil that is used as a source for crude oil washing is lowered at least one meter;

(2) A tank used as a slop tank is not used as a source for crude oil washing until:

(i) Its contents are discharged ashore or to another tank; and

(ii) The tank contains only crude oil;

(3) During COW operations:

(i) The valves under § 157.122(i)(1) are shut; or

(ii) The blanks under § 157.122(i)(2) are installed;

(4) The rotation of each COW machine mounted to or close to the bottom of each cargo tank is verified by:

(i) A visual inspection of a means located outside of the cargo tank that indicates movement of the machine during COW operations;

(ii) An audio inspection during COW operations; or

(iii) An inspection on a ballast voyage, with water as the fluid flowing through the machine;

(5) During the audio inspection under paragraph (a)(4)(ii) of this section, the COW machine being inspected is the only one operating in that tank;

(6) Before the inspection under paragraph (a)(4)(iii) of this section, the tank that has the COW machine being inspected in it, is gas freed;

(7) Each COW machine that is inspected under paragraph (a)(4)(iii) of this section is inspected at least once after every sixth COW operation of that machine, but no less that once every 12 months;

(8) After each stripping operation is completed, each tank:

(i) Is sounded by a means under § 157.128(b); and

(ii) Contains no oil except a minimal quantity near the stripping suction;

(9) Before the tank vessel begins each ballast voyage, each cargo tank and each cargo main, stripping, and COW piping is stripped of crude oil and the strippings are conveyed ashore through the piping under § 157.11(d)(3) or § 157.11(e)(4);

(10) Before water washing the cargo tanks, the piping of the COW system is drained of crude oil;

(11) When the cargo tanks are not being water washed, the hydrant valves under § 157.122(g) are blanked off;

(12) If COW machines that are used as anchors for the piping of the COW system are removed, the means available under § 157.122(l) for anchoring the piping are installed;

(13) The fire main is not connected to the COW system; and

(14) On combination carriers, if flexible hoses under § 157.122(o) are used, those hoses are protectively stowed when not installed in the COW piping system.

(b) In addition to meeting paragraph (a) of this section, the master of a tank vessel having a COW system under § 157.10a(a)(2) or § 157.10c(b)(2) shall ensure that—

(1) Before ballasting cargo tanks upon leaving a port, each cargo pump, manifold, and piping that is used for ballasting the cargo tanks is drained of all crude oil; and

(2) Before ballasting or deballasting cargo tanks, except when ballasting cargo tanks to leave a port, the cargo piping that is used for ballasting or deballasting the cargo tanks is water washed.

[CGD 77–058b, 45 FR 43709, June 30, 1980, as amended by CGD 82–28, 50 FR 11628, Mar. 22, 1985]

§ 157.156 COW operations: Meeting manual requirements.

Except as allowed in § 157.158, the master of a foreign tank vessel having a COW system under § 157.10(e), § 157.10a(a)(2), or § 157.10c(b)(2) that has the *Crude Oil Washing Operations and Equipment Manual* approved under § 157.112 and is operating in the navigable waters of the United States or transferring cargo at a port or place subject to the jurisdiction of the United States and the master of a U.S. tank vessel having a COW system under § 157.10(e), § 157.10a(a)(2), or § 157.10c(b)(2) shall ensure that during each COW operation—

(a) The procedures listed in the *Crude Oil Washing Operations and Equipment Manual* are followed; and

(b) The characteristics recorded in the *Crude Oil Washing Operations and Equipment Manual* under § 157.150(b) are met.

[CGD 77–058b, 45 FR 43709, June 30, 1980, as amended by CGD 82–28, 50 FR 11628, Mar. 22, 1985]

§ 157.158 COW operations: Changed characteristics.

The COW system may be operated with characteristics that do not meet those recorded under § 157.150(b) only if:

(a) The tank vessel passes the inspections under § 157.140 using the changed characteristics;

(b) The changed characteristics used to pass the inspections under § 157.140 are recorded in the *Crude Oil Washing Operations and Equipment Manual* approved under § 157.112; and

(c) The Coast Guard issues to the tank vessel an amending letter stating that the tank vessel complies with this subpart with these characteristics.

§ 157.160 Tanks: Ballasting and crude oil washing.

(a) The owner, operator, and master of a tank vessel under § 157.10(e) shall ensure that:

(1) Ballast water is carried in a cargo tank only as allowed under § 157.35;

(2) For oil cargo residue control, at least 25 percent of the cargo tanks are crude oil washed before each ballast voyage and that each cargo tank is crude oil washed at least once every fourth time crude oil is discharged from the tank, but no tank need be crude oil washed more than once during each 120 day period;

(3) Ballast water in a cargo tank that is crude oil washed but not water rinsed during or after the most recent discharge of crude oil from that tank is discharged in accordance with § 157.37(a); and

(4) Cargo tanks are not crude oil washed during a ballast voyage.

(b) The owner, operator, and master of a tank vessel having a COW system under § 157.10a(a)(2) or § 157.10c(b)(2) shall ensure that—

(1) Ballast water is carried only in a cargo tank that is crude oil washed during or after the most recent discharge of crude oil from that tank;

(2) Before each ballast voyage a sufficient number of cargo tanks have been crude oil washed during or after the most recent discharge of crude oil from those tanks to allow ballast water to be carried in cargo tanks:

(i) With a total capacity to meet the draft and trim requirements in § 157.10a(d); and

(ii) For the vessel's trading pattern and expected weather conditions;

(3) For oil cargo residue control, at least 25 percent of the cargo tanks not used for carrying ballast water under paragraph (b)(2)(i) of this section are crude oil washed before each ballast voyage, and that each cargo tank is crude oil washed at least once every fourth time crude oil is discharged from the tank, but no tank need be crude oil washed more than once during each 120 day period;

(4) Cargo tanks are not crude oil washed during a ballast voyage; and

(5) Ballast water in a cargo tank that is crude oil washed but not water rinsed during or after the most recent

discharge of crude oil from that tank is discharged in accordance with § 157.37(a).

[CGD 77–058b, 45 FR 43709, June 30, 1980, as amended by CGD 82–28, 50 FR 11628, Mar. 22, 1985; USCG–2000–7641, 66 FR 55573, Nov. 2, 2001]

§ 157.162 Crude oil washing during a voyage.

The master of a tank vessel having a COW system under § 157.10(e), § 157.10a(a)(2), or § 157.10c(b)(2) shall ensure that each cargo tank that is crude oil washed during a voyage other than a ballast voyage—

(a) Remains empty so that the tank may be inspected upon arrival at the next discharge port; and

(b) If it is to be used as a ballast tank when leaving the discharge port, is ballasted before the vessel departs from that discharge port so that the tank may be inspected under § 157.140(a)(2).

[CGD 77–058b, 45 FR 43709, June 30, 1980, as amended by CGD 82–28, 50 FR 11628, Mar. 22, 1985]

§ 157.164 Use of inert gas system.

(a) The master of a tank vessel having a COW system under § 157.10(e), § 157.10a(a)(2), or § 157.10c(b)(2) shall ensure the following:

(1) Before each cargo tank is crude oil washed, the oxygen content in the tank is measured at each of the following locations in the tank:

(i) One meter from the deck.

(ii) In the center of the ullage space.

(2) Before each cargo tank with partial bulkheads is crude oil washed, each area of that tank formed by each partial bulkhead is measured in accordance with paragraph (a)(1) of this section.

(3) Before each cargo tank is crude oil washed, the oxygen content in that tank is 8 percent or less by volume at the locations under paragraph (a)(1) of this section.

(4) During COW operations, the following are maintained in each cargo tank being crude oil washed:

(i) A gas or a mixture of gases with an oxygen content of 8 percent or less by volume.

(ii) A positive atmospheric pressure.

(5) During COW operations, a crew member monitors the instrumentation under 46 CFR 32.53–60(a)(1), except if that instrumentation has an alarm that sounds in the cargo control room when the oxygen content exceeds 8 percent by volume.

(b) Crude oil washing of the cargo tanks must be terminated when paragraph (a)(4) of this section is not met and crude oil washing of that tank may not be resumed until the requirements of paragraph (a)(4) of this section are met.

[CGD 77–058b, 45 FR 43709, June 30, 1980, as amended by CGD 82–28, 50 FR 11628, Mar. 22, 1985]

§ 157.166 Hydrocarbon emissions.

If the tank vessel having a COW system under § 157.10a(a)(2) or § 157.10c(b)(2) transfers cargo at a port in the United States that is in an area designated in 40 CFR Part 81 as an area that does not meet the national primary ambient air quality ozone standard under 40 CFR Part 50, issued under the Clean Air Act, as amended (42 U.S.C. 1857), the master of the vessel shall ensure that when cargo tanks are ballasted in that port the hydrocarbon vapors in each tank are contained by a means under § 157.132.

NOTE: Questions relating to whether or not a particular port is located in an area designated in 40 CFR Part 81 as an area that does not meet the national primary ambient air quality standard under 40 CFR Part 50 should be directed to the Plans Analysis Section of the Environmental Protection Agency at (919) 541–5665.

[CGD 82–28, 50 FR 11628, Mar. 22, 1985]

§ 157.168 Crew member: Main deck watch.

During COW operations, the master shall ensure that at least one member of the crew with a designated responsibility for monitoring COW operations is on the main deck at all times.

§ 157.170 COW equipment: Removal.

(a) Whenever a deck mounted COW machine is removed from the tank, the master shall ensure that:

(1) The supply piping to that machine is blanked off; and

(2) The tank opening is sealed by a secured plate made of steel or an equivalent material accepted by the Commandant.

(b) If the equipment for the COW system is removed from a cargo tank for the carriage of cargoes other than crude oil and then reinstalled, the master shall ensure that, before COW operations are conducted, the system has no crude oil leakage.

§ 157.172 Limitations on grades of crude oil carried.

If a tank vessel having a COW system meeting § 157.10a(a)(2) or § 157.10c(b)(2) does not have segregated ballast tanks or dedicated clean ballast tanks that meet § 157.10c(c)(2), the owner, operator, and master shall ensure that the vessel carries only the grades of crude oil that can be used for crude oil washing.

[CGD 82–28, 50 FR 11628, Mar. 22, 1985]

Subpart E—Dedicated Clean Ballast Tanks on Tank Vessels

SOURCE: CGD 77–058b, 45 FR 43714, June 30, 1980, unless otherwise noted.

GENERAL

§ 157.200 Plans for U.S. tank vessels: Submission.

(a) Before modifications are made to a U.S. vessel to meet § 157.10a(b), § 157.10b(a)(2), § 157.10a(c)(2), or § 157.10c(c)(2), the owner or operator must submit to the Coast Guard plans or documents that include the following:

(1) The dedicated clean ballast tank arrangement.

(2) Documentation, calculations, or revised stability information to show that the vessel, with the addition of the dedicated clean ballast tanks, meets the stability standards for load line assignment in 46 CFR Part 42.

(3) Documentation, calculations, or a loading manual to show that the vessel, with the addition of the dedicated clean ballast tanks, meets the structural standards in 46 CFR Part 32.

(4) A drawing or diagram of the pumping and piping system for the dedicated clean ballast tanks.

(b) Plans under paragraph (a) of this section must be submitted to the Officer in Charge, Marine Inspection, of the zone in which the dedicated clean ballast tank system is installed or to the Commanding Officer, U.S. Coast Guard Marine Safety Center, 2100 2nd St. SW., Stop 7102, Washington, DC 20593–7102.

(Reporting and Recordkeeping requirements approved by the Office of Management and Budget under control number 1625–0036)

[CGD 77–058b, 45 FR 43714, June 30, 1980, as amended by CGD 79–152, 45 FR 82250, Dec. 15, 1980; CGD 82–28, 50 FR 11628, and 11630, Mar. 22, 1985; CGD 85–048a, 51 FR 15481, Apr. 24, 1986; USCG–1998–3799, 63 FR 35531, June 30, 1998; USCG–2006–25150, 71 FR 39210, July 12, 2006; USCG–2008–0179, 73 FR 35015, June 19, 2008; USCG–2010–0351, 75 FR 36286, June 25, 2010]

§ 157.202 Plans and documents for foreign tank vessels: Submission.

The owner or operator of a foreign tank vessel under § 150.10a(b), § 157.10a(c)(2), or § 157.10b(a)(2) who desires the letter from the Coast Guard under § 157.204 accepting the plans submitted under this paragraph, and the owner or operator of a foreign tank vessel under § 150.10c(c)(2) must submit to the Commandant (CG–543), U.S. Coast Guard, Washington, D.C. 20593–0001—

(a) Plans that include:

(1) The dedicated clean ballast tank arrangement; and

(2) A drawing or diagram of the pumping and piping system for the dedicated clean ballast tanks; and

(b) Documentation from the authority that assigned the load line to the tank vessel that states that the location of the dedicated clean ballast tanks is acceptable to that authority.

[CGD 77–058b, 45 FR 43714, June 30, 1980, as amended by CGD 82–28, 50 FR 11629, Mar. 22, 1985; CGD 88–052, 53 FR 25122, July 1, 1988; CGD 96–026, 61 FR 33668, June 28, 1996]

§ 157.204 Letter of acceptance.

The Coast Guard informs the submitter by letter that the plans submitted under § 157.200 or the plans and documents submitted under § 157.202 are accepted, if the plans submitted under § 157.200 or the plans and documents submitted under § 157.202 show

that the dedicated clean ballast tank system meets this subpart.

§ 157.206 Dedicated Clean Ballast Tanks Operations Manual for U.S. tank vessels: Submission.

The owner or operator of a U.S. tank vessel meeting §157.10a(b), §157.10a(c)(2), §157.10b(a)(2), or §157.10c(c)(2) must submit two copies of a manual that meets §157.224 to the Officer in Charge, Marine Inspection, of the zone in which the dedicated clean ballast tank system is installed or to the appropriate Coast Guard field technical office listed in §157.200(b).

(Reporting and Recordkeeping requirements approved by the Office of Management and Budget under control number 1625–0036)

[CGD 82–28, 50 FR 11629, and 11630, Mar. 22, 1985, as amended by USCG–2006–25150, 71 FR 39210, July 12, 2006]

§ 157.208 Dedicated Clean Ballast Tanks Operations Manual for foreign tank vessels: Submission.

If the owner or operator of a foreign tank vessel meeting §157.10a(b), §157.10a(c)(2), §157.10b(a)(2), or §157.10c(c)(2) desires a Coast Guard approved *Dedicated Clean Ballast Tanks Operations Manual* under §157.210, the owner or operator must submit two copies of a manual that meets §157.224 to the Commandant (CG–543), U.S. Coast Guard, 2100 2nd St. SW., Stop 7581, Washington, DC 20593–7581.

(Reporting and Recordkeeping requirements approved by the Office of Management and Budget under control number 1625–0036)

[CGD 82–28, 50 FR 11629, and 11630, Mar. 22, 1985, as amended by CGD 88–052, 53 FR 25122, July 1, 1988; CGD 96–026, 61 FR 33668, June 28, 1996; USCG–2006–25150, 71 FR 39210, July 12, 2006; USCG–2010–0351, 75 FR 36286, June 25, 2010]

§ 157.210 Approved Dedicated Clean Ballast Tanks Operations Manual.

If the manuals submitted under §157.206 or §157.208 meet §157.224, the Coast Guard approves the manuals and forwards one of the approved manuals to the submitter.

§ 157.212 Dedicated Clean Ballast Tanks Operations Manual: Not approved.

If the *Dedicated Clean Ballast Tanks Operations Manual* submitted under §157.206 or §157.208 is not approved, the Coast Guard forwards a letter to the submitter with the reasons why the manual was not approved.

§ 157.214 Required documents: U.S. tank vessels.

The owner, operator, and master of a U.S. tank vessel meeting §157.10a(b), §157.10a(c)(2), §157.10b(a)(2), or §157.10c(c)(2) shall ensure that the vessel does not engage in a voyage unless the vessel has on board—

(a) The letter under §157.204 accepting the dedicated clean ballast tank system plans;

(b) The Coast Guard approved *Dedicated Clean Ballast Tanks Operations Manual* under §157.210; and

(c) Any amending letters issued under §157.218 approving alterations.

(Reporting and Recordkeeping requirements approved by the Office of Management and Budget under control number 1625–0036)

[CGD 77–058b, 45 FR 43714, June 30, 1980, as amended by CGD 82–28, 50 FR 11629, and 11630, Mar. 22, 1985; USCG–2006–25150, 71 FR 39211, July 12, 2006]

§ 157.216 Required documents: Foreign tank vessels.

(a) The owner, operator, and master of a foreign tank vessel meeting §157.10a(b), §157.10a(c)(2), §157.10b(a)(2), or §157.10c(c)(2) shall ensure that the vessel does not enter the navigable waters of the United States or transfer cargo at a port or place subject to the jurisdiction of the United States unless the vessel has on board—

(1) The *Dedicated Clean Ballast Tank Operations Manual* that—

(i) Is approved under §157.210; or

(ii) Is certified by the government of the vessel's flag state because it meets the manual standards in Resolution 14 of the MARPOL 73/78; and

(2) Either of the following:

(i) A letter from the government of the vessel's flag state that certifies that the vessel complies with Resolution 14 of the MARPOL 73/78.

(ii) The letter of acceptance under § 157.204 and each amending letter issued under § 157.218(c).

(b) On January 1, 1986, or 15 years after the date it was delivered to the original owner or 15 years after the completion of a major conversion, whichever is later, the owner, operator, and master of a foreign tank vessel under § 157.10c(c)(2) shall ensure that the vessel does not enter the navigable waters of the United States or transfer cargo at a port or place subject to the jurisdiction of the United States unless the vessel has on board—

(1) The *Dedicated Clean Ballast Tank Operations Manual* that—

(i) Is approved under § 157.210; or

(ii) Bears a certification by an authorized CS or the government of the vessel's flag state that the manual meets § 157.224; and

(2) Either of the following:

(i) A letter from an authorized CS or the government of the vessel's flag state certifying the vessel complies with §§ 157.220 and 157.222, and any amending letters issued approviding alterations.

(ii) The letter of acceptance under § 157.204 and each amending letter issued under § 157.218.

(Reporting and Recordkeeping requirements approved by the Office of Management and Budget under control number 1625–0036)

[CGD 82–28, 50 FR 11629, and 11630, Mar. 22, 1985; USCG–2000–7641, 66 FR 55573, Nov. 2, 2001; USCG–2006–25150, 71 FR 39211, July 12, 2006]

§ 157.218 Dedicated clean ballast tanks: Alterations.

The dedicated clean ballast tanks or equipment on a tank vessel that has a letter issued under § 157.204 may not be altered so that they no longer meet the plans accepted under that section unless:

(a) The owner or operator of that vessel submits plans that show the alterations to the Coast Guard official to which the plans were submitted under § 157.200 or § 157.202;

(b) The owner or operator of that vessel submits changes to the manual under § 157.224 that show and describe the alterations to the Coast Guard official to which the manuals were submitted under § 157.206 or § 157.208; and

(c) The Coast Guard issues to the tank vessel an amending letter stating that the vessel, as altered, complies with this subpart.

DESIGN AND EQUIPMENT

§ 157.220 Dedicated clean ballast tanks: Standards.

(a) Cargo tanks that are designated as dedicated clean ballast tanks must allow the tank vessel to meet the draft and trim requirements under §§ 157.10a(d) and 157.10b(b).

(b) Each tank under paragraph (a) of this section must be:

(1) A wing tank; or

(2) Any other tank that is accepted by the Commandant.

[CGD 77–058b, 45 FR 43714, June 30, 1980, as amended by CGD 79–152, 45 FR 82250, Dec. 15, 1980]

§ 157.222 Pump and piping arrangements.

(a) Dedicated clean ballast tanks must be connected to the least practicable:

(1) Number of pumps; and

(2) Amount of piping.

(b) Each piping system that is arranged to convey clean ballast and cargo must be designed to be flushed to the slop tank with water.

(c) The piping system of each dedicated clean ballast tank must be arranged so that oily water does not enter any dedicated clean ballast tank when the piping system is flushed.

(d) The piping system of each dedicated clean ballast tank must have at least two valves that isolate that tank from each cargo tank.

(e) The piping system of the dedicated clean ballast tanks must have a sample point that is located in a vertical section of discharge piping.

NOTE: An example of a sample point is shown in 46 CFR Figure 162.050–17(e).

§ 157.224 Dedicated Clean Ballast Tanks Operations Manual.

Each *Dedicated Clean Ballast Tanks Operations Manual* must include the following information:

(a) The text of the Annex of Resolution 14 of the MARPOL 73/78.

(b) A description of the dedicated clean ballast tanks system.

(c) A procedure for dedicated clean ballast tanks operations.

NOTE: Appendix D is an example of such a procedure.

[CGD 77–058b, 45 FR 43714, June 30, 1980, as amended by USCG–2000–7641, 66 FR 55573, Nov. 2, 2001]

DEDICATED CLEAN BALLAST TANKS OPERATIONS

§ 157.225 Dedicated clean ballast tanks operations: General.

The master of a tank vessel meeting § 157.10a(b), § 157.10a(c)(2), § 157.10b(a)(2), or § 157.10c(c)(2) shall ensure that—

(a) Before clean ballast in any dedicated clean ballast tank is discharged or transferred, the pump and piping system for conveying the clean ballast are flushed with water;

(b) Before any dedicated clean ballast tank is ballasted, the pump and piping system for conveying the ballast are flushed with water;

(c) Before the pump and piping system of the dedicated clean ballast tanks are used for cargo transfer:

(1) If water in the dedicated clean ballast tanks is used for flushing the pump and piping system, the volume of water for flushing is equal to at least 10 times the volume of the piping to be flushed;

(2) The piping system is drained of fluid; and

(3) The valves under § 157.222(d) are closed;

(d) Flushing water is pumped from a sea chest or a dedicated clean ballast tank through the pump and piping system of the dedicated clean ballast tanks and then to a slop tank;

(e) Clean ballast from each dedicated clean ballast tank is discharged in accordance with § 157.43;

(f) When the pump and piping system are being flushed:

(1) The oil content of the flushing water in the piping system is monitored; and

(2) The pump and piping system are flushed until the oil content of the flushing water in the piping stabilizes; and

(g) If any pump or piping system that is flushed to meet paragraph (f) of this section is used to convey cargo during an emergency, that pump or piping system is flushed again to meet paragraph (f) of this section before being used to convey clean ballast.

[CGD 77–058b, 45 FR 43714, June 30, 1980, as amended by CGD 82–28, 50 FR 11629, Mar. 22, 1985]

§ 157.226 Dedicated Clean Ballast Tanks Operations Manual: Procedures to be followed.

The master of a foreign tank vessel meeting § 157.10a(b), § 157.10a(c)(2), § 157.10b(a)(2), or § 157.10c(c)(2) that has the *Dedicated Clean Ballast Tanks Operations Manual* approved under § 157.210 and is operating in the navigable waters of the United States or transferring cargo at a port or place subject to the jurisdiction of the United States and the master of a U.S. tank vessel meeting § 157.10a(b), § 157.10a(c)(2), § 157.10b(a), or § 157.10c(c)(1) shall ensure that the procedure listed in the *Dedicated Clean Ballast Tanks Operations Manual* are followed.

[CGD 82–28, 50 FR 11629, Mar. 22, 1985]

§ 157.228 Isolating Valves: Closed during a voyage.

(a) The master of each U.S. tank vessel under § 157.10a(b), § 157.10a(c)(2), § 157.10b(a)(2), or § 157.10c(c)(2) shall ensure that the valves under § 157.222(d) remain closed during each voyage.

(b) The master of each foreign tank vessel meeting § 157.10a(b), § 157.10a(c)(2), § 157.10b(a)(2), or § 157.10c(c)(2) shall ensure that the valves under § 157.222(d) remain closed when the vessel is on a voyage in the navigable waters of the United States.

[CGD 82–28, 50 FR 11629, Mar. 22, 1985]

Subpart F—Exemption From § 157.10a or § 157.10c

SOURCE: CGD 79–126, 46 FR 3513, Jan. 15, 1981, unless otherwise noted.

§ 157.300 Qualifications for exemptions under this part.

(a) Each vessel under § 157.10a or § 157.10c of this part may qualify for an exemption from the requirements of § 157.10a or § 157.10c of this part if—

(1) The vessel loads and discharges cargo only at ports or places within the

United States, its territories, or its possessions; and

(2) The application for exemption meets § 157.302.

(b) Except where the owner can show good cause, a vessel is not granted an exemption under this subpart if a previous exemption for the vessel has been revoked by the Coast Guard under § 157.308(a)(1) or § 157.308 (a)(2).

[CGD 79–126, 46 FR 3513, Jan. 15, 1981, as amended by CGD 82–28, 50 FR 11630, Mar. 22, 1985]

§ 157.302 Applying for an exemption or requesting modification of an exemption.

(a) Each application for an exemption or modification must be in writing and submitted to the Commandant (CG–543), U.S. Coast Guard, 2100 2nd St. SW., Stop 7581, Washington, DC 20593–7581.

(b) Each application for exemption must include the following: (1) The name and official number of the vessel for which the exemption is requested.

(2) A list of each port or place where the vessel would load cargo.

(3) The name, address, and telephone number for each shore-based reception facility at each port listed under paragraph (b)(2) of this section where the vessel would discharge its ballast water and oil cargo residues, including:

(i) The name or title of the person at each facility who should be contacted for information concerning the operation of the reception facility; and

(ii) A statement from the facility owner disclosing whether or not, based on current operating conditions, the facility has the capability of processing the anticipated volume and type of discharges from the vessel without adversely affecting the service of the facility to current users.

(4) The number of the permit under the National Pollutant Discharge Elimination System (NPDES permit) issued to each listed shore-based reception facility.

(5) A list of each type of oil cargo that the vessel would load.

(6) A description of the method by which the vessel would discharge ballast water and oil cargo residues to each listed shore based reception facility.

(c) Each request for modification to an exemption must include the following:

(1) The name and official number of the vessel for which the modification to the exemption is requested.

(2) The reason for requesting modification of the exemption.

(3) Any additional information which is pertinent to the modification.

[CGD 79–126, 46 FR 3513, Jan. 15, 1981, as amended by CGD 82–28, 50 FR 11630, Mar. 22, 1985; CGD 88–052, 53 FR 25122, July 1, 1988; CGD 96–026, 61 FR 33668, June 28, 1996; USCG–2000–7641, 66 FR 55573, Nov. 2, 2001; USCG–2010–0351, 75 FR 36286, June 25, 2010]

§ 157.304 Shore-based reception facility: standards.

No shore-based reception facility may be listed to meet § 157.302(b)(3) unless that reception facility has:

(a) A valid NPDES permit which allows it to process the ballast water and oil cargo residues of the vessel for which the exemption is being requested; and

(b) The capacity to receive and store a volume of dirty ballast water equivalent to 30 percent of the deadweight, less the segregated ballast volume, of the vessel for which the exemption is being requested.

[CGD 79–126, 46 FR 3513, Jan. 15, 1981, as amended by USCG–2000–7641, 66 FR 55573, Nov. 2, 2001]

§ 157.306 Granting, denying, or modifying an exemption.

(a) The Assistant Commandant for Marine Safety, Security and Environmental Protection issues a written decision concerning the grant or denial of each exemption or modification requested under § 157.302.

(b) If the exemption or request for modification is denied, the decision under paragraph (a) of this section includes the reasons for the denial.

(c) Any person directly affected by, and not satisfied with, a decision made under paragraph (a) of this section may appeal that decision, in writing, to the Commandant (CG–543), U.S Coast Guard, 2100 2nd St. SW., Stop 7581, Washington, DC 20593–7581. The appeal may contain any supporting documentation or evidence that the appellant wishes to have considered.

(d) The Commandant, U.S. Coast Guard issues a ruling after reviewing the appeal submitted under paragraph (c) of this section. This ruling is final agency action.

[CGD 79–126,46 FR 3513, Jan. 15, 1981, as amended by CGD 88–052, 53 FR 25122, July 1, 1988; CGD 96–026, 61 FR 33668, June 28, 1996; CGD 97–023, 62 FR 33364, June 19, 1997; USCG–2002–12471, 67 FR 41333, June 18, 2002; USCG–2010–0351, 75 FR 36286, June 25, 2010]

§ 157.308 Revocation of exemption: procedure and appeals.

(a) The Officer in Charge, Marine Inspection may consider the revocation of the exemption granted under this subpart when:

(1) Requested by the vessel's owner;

(2) There is evidence that the vessel's owner, operator, or master has failed to comply with the requirements of this subpart; or

(3) There have been changes to the NPDES permit of a reception facility listed to meet § 157.304(b)(3) that would adversely affect the ability of that facility to process the vessel's discharges.

(b) The Officer in Charge, Marine Inspection, of the zone in which an occurrence under paragraph (a)(2) or (a)(3) of this section takes place notifies the owner, operator, and master of the exempted vessel of the specific reasons for considering the revocation of the exemption.

(c) Evidence or arguments for the retention of the exemption that are submitted to the Officer in Charge, Marine Inspection within thirty days of receipt of the notice under paragraph (b) of this section will be considered before a ruling is made.

(d) If the owner is not satisfied with the ruling made under this section by the Officer in Charge, Marine Inspection, that ruling may be appealed under the procedure in § 157.06 of this part.

§ 157.310 Exempted vessels: operations.

The owner, operator, and master of each vessel that has been granted an exemption under this subpart must ensure that:

(a) The vessel trades only between ports or places within the United States, its territories or possessions;

(b) The vessel loads cargo only at ports or places listed in the exemption;

(c) Except as allowed under § 157.41 (a) and (b) of this part, any ballast water, except segregated ballast discharged in accordance with § 157.43(b) of this part, and any tank washing or oil cargo residues are:

(1) Retained on board; or

(2) Transferred to a shore-based reception facility that is listed in the application for exemption, or in the case of an emergency or a shipyard entry, an alternative acceptable to the cognizant Officer in Charge, Marine Inspection;

(d) The vessel loads only those cargoes listed in the exemption; and

(e) The letter under § 157.306 that grants the exemption is on board the vessel; or

(f) The certificate of inspection bearing the following endorsement is on board the vessel:

Exempted under 33 CFR 157.306 from the requirements of (*33 CFR 157.10a or 157.10c, whichever is appropriate, will be inserted*). This vessel may not discharge cargo in any foreign port, nor may it load cargo in a port other than the following: (*a list of ports contained in the application that is accepted by the Coast Guard for the exempted vessel will be inserted here*).

[CGD 79–126, 46 FR 3513, Jan. 15, 1981, as amended by CGD 82–28, 50 FR 11630, Mar. 22, 1985; USCG–2000–7641, 66 FR 55573, Nov. 2, 2001]

Subpart G—Interim Measures for Certain Tank Vessels Without Double Hulls Carrying Petroleum Oils

SOURCE: CGD 91–045, 59 FR 40188, Aug. 5, 1994, unless otherwise noted.

§ 157.400 Purpose and applicability.

(a) The purpose of this subpart is to establish mandatory safety and operational requirements to reduce environmental damage resulting from petroleum oil spills.

(b) This subpart applies to each tank vessel specified in § 157.01 of this part that—

(1) Is 5,000 gross tons or more;

(2) Carries petroleum oil in bulk as cargo or oil cargo residue; and

(3) Is not equipped with a double hull meeting § 157.10d of this part, or an equivalent to the requirements of § 157.10d, but required to be equipped with a double hull at a date set forth in 46 U.S.C. 3703a (b)(3) and (c)(3).

[CGD 91–045, 61 FR 39788, July 30, 1996, as amended by USCG–2000–7641, 66 FR 55573, Nov. 2, 2001]

§ 157.410 Emergency lightering requirements for oil tankers.

Each oil tanker, to which this subpart applies, shall carry the equipment listed in paragraphs (a), (b), and (c) of this section. This equipment shall be located on the main deck, in the cargo control room, in the pump room, or in the forecastle locker. This equipment must be protected from the weather and must be stored in one separate and marked location which is as convenient to the cargo manifold, as is practicable.

(a) Reducers, adapters, bolts, washers, nuts, and gaskets to allow at least two simultaneous transfer connections to be made from the vessel's cargo manifold to 15-centimeter (6-inch), 20-centimeter (8-inch), and 25-centimeter (10-inch) cargo hoses. All reducers must be permanently marked with sizes.

(b) One extra set of adapters, bolts, washers, nuts, and gaskets per reducer set must be carried as spares.

(c) Reducers, bolts, and gaskets must meet the requirements of 46 CFR 56.25. Cast iron and malleable iron must not be used.

[CGD 91–045, 59 FR 40188, Aug. 5, 1994, as amended by CGD 91–045, 61 FR 39789, July 30, 1996; USCG–1998–3799, 63 FR 35531, June 30, 1998]

§ 157.415 Bridge resource management policy and procedures.

(a) Not later than February 1, 1997, a tankship owner or operator shall provide written policy and procedures to masters and officers in charge of the navigational watch concerning the need for continuously reassessing how bridge-watch resources are being allocated and used, based on bridge resource management principles. This written policy and procedures must include vessel and crew specific examples that address the following:

(1) The number of qualified individuals that should be on watch to ensure that all duties can be performed effectively.

(2) The appropriate qualifications of all members of the navigational watch, the importance of confirming that all members of the watch are fit for duty, and the need to ensure that all members of the navigational watch are not impaired by fatigue.

(3) The need to take into account any known limitation in qualifications or fitness of individuals when making navigational and operational decisions.

(4) The need to be clear and unambiguous in assigning duties and the need to establish that the individual understands his or her responsibilities.

(5) The need to perform tasks in a clear order of priority and to adjust the priority of tasks as circumstances may require.

(6) The importance of assigning and reassigning members of the watch to locations where they can perform their duties most effectively.

(7) Conditions that warrant task reassignment among members of the watch.

(8) The instruments and equipment necessary for the effective performance of each task and appropriate actions if the instruments and equipment are not available or not functioning properly.

(9) The need for, and examples of, clear, immediate, reliable, and relevant communication among members of the navigational watch.

(10) The action to be taken to suppress, remove, and avoid nonessential activity and distractions on the bridge.

(11) The importance of collecting, processing, and interpreting all essential information and making it conveniently available to other members of the navigational watch and the pilot, as necessary to perform their duties.

(12) The need to ensure that nonessential materials are not placed on the bridge.

(13) The need to ensure that members of the navigational watch are prepared to respond at all times efficiently and

effectively to changes in circumstances.

(b) Beginning not later than February 1, 1997, a tank barge owner or operator shall not permit the barge to be towed unless those individuals assigned to duties that are similar to the duties of the officer in charge of a navigational watch on the primary towing vessel have been provided written bridge resource management policy and procedures as specified in paragraph (a) of this section.

[CGD 91–045, 61 FR 39789, July 30, 1996]

§ 157.420 Vessel specific watch policy and procedures.

(a) Not later than February 1, 1997, the owner or operator of a tankship shall provide written policy and procedures to masters concerning the need for each individual who is newly employed on board the vessel to have a reasonable opportunity to become familiar with the shipboard equipment, operating procedures, and other arrangements needed for the proper performance of their duties, before being assigned to such duties. This written policy and procedures shall be followed by the master and shall include the following:

(1) Allocation of a reasonable and appropriate time period for each newly employed individual to allow him or her the opportunity to become acquainted with the following:

(i) The specific equipment the individual will be using or operating; and

(ii) The vessel specific watchkeeping, safety, environmental protection, and emergency procedures and arrangements the individual needs to know to perform the assigned duties properly.

(2) Designation of a knowledgeable crew member who will be responsible for ensuring that an opportunity is provided to each newly employed individual to receive essential information in a language the individual understands.

(b) Beginning not later than February 1, 1997, a tank barge owner or operator shall not permit the barge to be towed unless those individuals assigned to duties as master or operator on the primary towing vessel have been provided written policy and procedures as specified in paragraph (a) of this section.

[CGD 91–045, 61 FR 39789, July 30, 1996]

§ 157.430 Enhanced survey requirements.

Beginning at each tank vessel's next regularly scheduled drydock examination and continuing as required under 46 CFR part 31, or, for each foreign flagged tank vessel, beginning at the next drydock and continuing as required under the foreign vessel's flag administration, a tank vessel owner or operator shall—

(a) Implement an enhanced survey program that complies with the standards of IMO Resolution A.744(18), Annex B sections 1.1.3–1.1.4, 1.2–1.3, 2.1, 2.3–2.6, 3–8, and Annexes 1–10 with appendices;

(b) Implement a vessel specific survey program that provides a level of protection equivalent to the requirements in paragraph (a)(1) of this section and is approved by the Commandant (CG–543). A written request for program equivalency under this paragraph must be submitted to the Commandant (CG–543); or

(c) For a tankship of less than 20,000 deadweight tons (dwt) carrying crude oil, a tankship of less than 30,000 dwt carrying product, or a tank barge, implement an enhanced survey program that—

(1) Includes oversight of the program by the Coast Guard, the vessel's flag administration, an authorized classification society as described in § 157.04 of this part, or a licensed professional engineer;

(2) Has the frequency of survey which is no less than the inspections required by 46 CFR subpart 31.10;

(3) Has survey scope and recordkeeping requirements that are comparable to the requirements of paragraph (a)(1) of this section; and

(4) Includes keeping a copy of the most recent survey on board the vessel or, upon request by the Coast Guard, making the surveys available within 24 hours for examination.

[CGD 91–045, 61 FR 39789, July 30, 1996]

§ 157.435 Vital systems surveys.

(a) A tank vessel owner or operator shall ensure that surveys of the following systems are conducted:

(1) *Cargo systems*. The survey must include the examination and testing of the items listed in chapters 6, 7, and 10 of the International Safety Guide for Oil Tankers and Terminals, if applicable, prior to cargo transfer operations.

(2) *Mooring systems*. The survey must include a visual examination of the emergency towline, the anchor releasing mechanism, and mooring lines prior to entering the port or place of destination, if weather permits, or prior to getting underway.

(b) Surveys must be conducted by company management personnel, company designated individuals, or vessel officers knowledgeable about the equipment operating parameters and having the authority, capability, and responsibility to initiate corrective action when the equipment is not functioning properly.

(c) The results of the survey required in paragraph (a) of this section, including the material condition of each system, must be recorded in the tank vessel's deck log or other onboard documentation.

[CGD 91–045, 61 FR 39789, July 30, 1996; 61 FR 41685, Aug. 9, 1996]

§ 157.440 Autopilot alarm or indicator.

(a) A tankship owner or operator shall ensure that each installed autopilot unit without automatic manual override has an audible and visual alarm, which is distinct from other required bridge alarms, that will activate if the helm is manually moved while the autopilot is engaged.

(b) A tank barge owner or operator shall ensure that each autopilot unit without automatic manual override installed on the primary towing vessel has a means to clearly indicate the autopilot status and warns personnel of the requirement to disengage the autopilot if positive rudder control is needed.

[CGD 91–045, 61 FR 39790, July 30, 1996]

§ 157.445 Maneuvering performance capability.

(a) A tankship owner or operator shall ensure that maneuvering tests in accordance with IMO Resolution A.751(18), sections 1.2, 2.3–2.4, 3–4.2, and 5 (with Explanatory Notes in MSC/Circ.644) have been conducted by July 29, 1997. Completion of maneuvering performance tests must be shown by—

(1) For a foreign flag tankship, a letter from the flag administration or an authorized classification society, as described in § 157.04 of this part, stating the requirements in paragraph (a) of this section have been met; or

(2) For a U.S. flag tankship, results from the vessel owner confirming the completion of the tests or a letter from an authorized classification society, as described in § 157.04 of this part, stating the requirements in paragraph (a) of this section have been met.

(b) If a tankship undergoes a major conversion or alteration affecting the control systems, control surfaces, propulsion system, or other areas which may be expected to alter maneuvering performance, the tankship owner or operator shall ensure that new maneuvering tests are conducted as required by paragraph (a) of this section.

(c) If a tankship is one of a class of vessels with identical propulsion, steering, hydrodynamic, and other relevant design characteristics, maneuvering performance test results for any tankship in the class may be used to satisfy the requirements of paragraph (a) of this section.

(d) The tankship owner or operator shall ensure that the performance test results, recorded in the format of Appendix 6 of the Explanatory Notes in MSC/Circ.644, are prominently displayed in the wheelhouse.

(e) Prior to entering the port or place of destination and prior to getting underway, the tankship master shall discuss the results of the performance tests with the pilot while reviewing the anticipated transit and the possible impact of the tankship's maneuvering capability on the transit.

[CGD 91–045, 61 FR 39790, July 30, 1996; 61 FR 41685, Aug. 9, 1996]

§ 157.450 Maneuvering and vessel status information.

A tankship owner, master, or operator shall comply with IMO Resolution A.601(15), Annex sections 1.1, 2.3, 3.1, and 3.2, with appendices.

[CGD 91–045, 61 FR 39790, July 30, 1996]

§ 157.455 Minimum under-keel clearance.

(a) The owner or operator of a tankship, that is not fitted with a double bottom that covers the entire cargo tank length, shall provide the tankship master with written under-keel clearance guidance that includes—

(1) Factors to consider when calculating the ship's deepest navigational draft;

(2) Factors to consider when calculating the anticipated controlling depth;

(3) Consideration of weather or environmental conditions; and

(4) Conditions which mandate when the tankship owner or operator shall be contacted prior to port entry or getting underway; if no such conditions exist, the guidance must contain a statement to that effect.

(b) Prior to entering the port or place of destination and prior to getting underway, the master of a tankship that is not fitted with the double bottom that covers the entire cargo tank length shall plan the ship's passage using guidance issued under paragraph (a) of this section and estimate the anticipated under-keel clearance. The tankship master and the pilot shall discuss the ship's planned transit including the anticipated under-keel clearance. An entry must be made in the tankship's official log or in other onboard documentation reflecting discussion of the ship's anticipated passage.

(c) The owner or operator of a tank barge, that is not fitted with a double bottom that covers the entire cargo tank length, shall not permit the barge to be towed unless the primary towing vessel master or operator has been provided with written under-keel clearance guidance that includes—

(1) Factors to consider when calculating the tank barge's deepest navigational draft;

(2) Factors to consider when calculating the anticipated controlling depth;

(3) Consideration of weather or environmental conditions; and

(4) Conditions which mandate when the tank barge owner or operator shall be contacted prior to port entry or getting underway; if no such conditions exist, the guidance must contain a statement to that effect.

[CGD 91–045, 62 FR 49608, Sept. 23, 1997]

§ 157.460 Additional operational requirements for tank barges.

(a) *Emergency steering capability*. The owner or operator of each tank barge shall not permit the barge to be towed unless, by November 27, 1997, the primary towing vessel has—

(1) A steering gear system with a main power unit, an alternative power unit, and two remote steering gear control systems, except that separate steering wheels or steering levers are not required. The steering gear control systems must be arranged so that if the system in operation fails, the other system can be brought into immediate operation from a position on the navigating bridge; or

(2) Twin screw propulsion with separate control systems for each propeller.

(b) *Fendering system*. An owner or operator of a tank barge shall not permit the barge to be towed unless the primary towing vessel and any fleeting or assist towing vessels have a fendering system that is of substantial size and composition to prevent metal to metal contact between the towing vessel and the barge during maneuvering operations.

[CGD 91–045, 61 FR 39790, July 30, 1996; 61 FR 41685, Aug. 9, 1996]

Subpart H—Interim Measures for Certain Tank Vessels Without Double Hulls Carrying Animal Fat or Vegetable Oil

SOURCE: CGD 91–045, 61 FR 39791, July 30, 1996, unless otherwise noted.

§ 157.500 Purpose and applicability.

(a) The purpose of this subpart is to establish mandatory safety and operational requirements to reduce environmental damage resulting from the discharge of animal fat or vegetable oil.

(b) This subpart applies to each tank vessel specified in § 157.01 of this part that—

(1) Is 5,000 gross tons or more;

(2) Carries animal fat or vegetable oil in bulk as cargo or cargo residue; and

(3) Is not equipped with a double hull meeting § 157.10d of this part, or an equivalent to the requirements of § 157.10d, but required to be equipped with a double hull at a date set forth in 46 U.S.C. 3703a (b)(3) and (c)(3).

§ 157.510 Operational measures.

An owner or operator of a tank vessel that carries animal fat or vegetable oil in bulk as cargo or cargo residue shall comply with the requirements in all sections of subpart G of this part.

Subpart I—Interim Measures for Certain Tank Vessels Without Double Hulls Carrying Other Non-Petroleum Oil

SOURCE: CGD 91–045, 61 FR 39791, July 30, 1996, unless otherwise noted.

§ 157.600 Purpose and applicability.

(a) The purpose of this subpart is to establish mandatory safety and operational requirements to reduce environmental damage resulting from the discharge of other non-petroleum oil.

(b) This subpart applies to each tank vessel specified in § 157.01 of this part that—

(1) Is 5,000 gross tons or more;

(2) Carries other non-petroleum oil in bulk as cargo or cargo residue; and

(3) Is not equipped with a double hull meeting § 157.10d of this part, or an equivalent to the requirements of § 157.10d, but required to be equipped with a double hull at a date set forth in 46 U.S.C. 3703a (b)(3) and (c)(3).

§ 157.610 Operational measures.

An owner or operator of a tank vessel that carries other non-petroleum oil in bulk as cargo or cargo residue shall comply with the requirements in all sections of subpart G of this part.

APPENDIX A TO PART 157—DAMAGE ASSUMPTIONS, HYPOTHETICAL OUTFLOWS, AND CARGO TANK SIZE AND ARRANGEMENTS

1. *Source*. The procedures for the damage assumption calculations contained in this Appendix conform to Regulations 24, 25, and 26 of Annex I of the International Convention for the Prevention of the Pollution from Ships, 1973, done at London, November 2, 1973.

2. *Assumptions*. For the purpose of calculating hypothetical outflow from tank vessels, three dimensions of the extent of damage of a parallelepiped on the side and bottom of the vessel are assumed.

(a) For side damage, the conditions are as follows:

Damage	Conditions
(1) Longitudinal extent l_c	⅓ $L^{2/3}$ or 14.5 m, whichever is less.
(2) Transverse extent (t_c) (inboard from the vessel's side at right angles to the centerline at the level corresponding to the assigned summer freeboard).	$B/5$ —or 11.5 m, whichever is less.
(3) Vertical extent (v_c)	From the base line upwards without limit.

(b) For bottom damage, two conditions to be applied individually to the stated portions of the vessel, as follows:

Damage	Conditions	
	For 0.3L from the forward perpendicular of ship	Any other part of ship
(1) Longitudinal extent (l_s)	$L/10$	$L/10$ or 5 meters, whichever is less.
(2) Transverse extent (t_s)	$B/6$ or 10 meters, whichever is less but not less than 5 meters.	5 meters.
(3) Vertical extent from the base line (v_s).	$B/15$ or 6 meters, whichever is less	$B/15$ or 6 meters, whichever is less.

3. *Hypothetical Outflow of Oil*. (a) The hypothetical outflow of oil in the case of side damage (O_c) and bottom damage (O_s) is calculated by the following formula with respect to compartments breached by damage to all conceivable locations along the length

of the vessel to the extent as defined in section 2 of this Appendix.

(1) For side damages: Formula

$O_c = \Sigma W_i + \Sigma K_i C_i$

(2) For bottom damage: Formula II

$O_s = \frac{1}{3}(\Sigma Z_i W_i + \Sigma Z_i C_i)$

Where:

W_i = Volume of a wing tank assumed to be breached by the damage as specified in section 2 of this Appendix; W_i for a segregated ballast tank may be taken equal to zero;

C_i = Volume of a center tank assumed to be breached by the damage as specified in section 2 of this Appendix; C_i for a segregated ballast tank may be taken equal to zero;

$$K_i = 1 - \frac{b_i}{t_c}$$

when b_i is equal to or greater than t_c, K_i is equal to zero;

$$Z_i = 1 - \frac{h_i}{v_s}$$

when h_i is equal to or greater than v_s, Z_i is equal to zero;

b_i = Minimum width of wing tank under consideration measured inboard from the vessel's side at right angles to the centerline at the level corresponding to the assigned summer freeboard; and

h_i = Minimum depth of the double bottom under consideration; where no double bottom is fitted, h_i is equal to zero.

(b) If a void space or segregated ballast tank of a length less than l_c is located between wing oil tanks, O_c in formula I of this section may be calculated on the basis of volume W_i being the actual volume of one such tank (where they are of equal capacity) or the smaller of the two tanks (if they differ in capacity), adjacent to such space, multiplied by S_i as defined below and taking for all other wing tanks involved in such a collision the value of the actual full volume.

$$S_i = 1 - \frac{l_i}{l_c}$$

Where l_i = length of void space or segregated ballast tank under consideration.

(c) Credit is only given in respect to double bottom tanks which are either empty or carrying clean water when cargo is carried in the tanks above.

(1) If the double bottom does not extend for the full length and width of the tank involved, the double bottom is considered nonexistent and the volume of the tanks above the area of the bottom damage must be included in formula II of this section even if the tank is not considered breached because of the installation of such a partial double bottom.

(2) Suction wells may be neglected in the determination of the value h_i if such wells are not excessive in area and extend below the tank for a minimum distance and in no case more than half the height of the double bottom. If the depth of such a well exceeds half the height of the double bottom, h_i is taken equal to the double bottom height minus the well height.

(d) In the case where bottom damage simultaneously involves four center tanks, the value of O_s may be calculated according to formula III as follows:

$O_s = \frac{1}{4}(\Sigma Z_i W_i + \Sigma Z_i C_i)$

(e) Credit for reduced oil outflow from bottom damage may be applied to formula III for an installed emergency high suction cargo transfer system that:

(1) transfers within two hours oil equal to one half of the volume of the largest tank involved;

(2) has sufficient ballast or cargo tankage available to receive the transferred oil; and

(3) has the high suction piping installed at a height not less than the vertical extent of bottom damage (v_s).

4. *Allowable volumes of cargo tanks.*

(a) The allowable volume of a wing cargo tank (VOL_w) is equal to seventy-five percent of O_A. In a segregated ballast tank vessel VOL_w may equal O_A for a wing cargo oil tank located between two segregated ballast tanks each of length greater than l_c and width greater than t_c.

(b) The allowable volume of a center cargo tank (VOL_c) is 50,000 cubic meters.

5. *Allowable length of cargo tanks.*

The length of each cargo tank (*1* a) must not exceed 10 meters or the distance calculated from (a), (b), or (c), as appropriate, whichever is greater:

(a) Where no longitudinal bulkhead is provided inside the cargo tanks: *1* a=[0.5(bi/B)+0.1] L, but not to exceed 0.2L.

(b) Where a centerline longitudinal bulkhead is provided inside the cargo tanks: *1* a=[0.25(bi/B)+0.15] L, but not to exceed 0.2L.

(c) Where two or more longitudinal bulkheads are provided inside the cargo tanks:

(1) For wing cargo tanks: *1* a = 0.2L.

(2) For center cargo tanks:

(i) If (bi/B) is equal to or greater than 0.2, *1* a = 0.2L.

(ii) If (bi/B) is less than 0.2:

(A) Where no centerline longitudinal bulkhead is provided, *1* a = [0.5(bi/B) + 0.1] L.

(B) Where a centerline longitudinal bulkhead is provided, *1* a = [0.25(bi/B) + 0.15] L.

(d) ''bi'' is the minimum distance from the ship's side to the outer longitudinal bulkhead of the tank in question, measured inboard at right angles to the centerline at the

level corresponding to the assigned summer freeboard.

[CGD 74–32, 40 FR 48283, Oct. 14, 1975, as amended by CGD 74–32, 40 FR 49328, Oct. 22, 1975; CGD 90–051, 57 FR 36245, Aug. 12, 1992; USCG–2008–0179, 73 FR 35015, June 19, 2008; USCG–2010–0351, 75 FR 36286, June 25, 2010]

APPENDIX B TO PART 157—SUBDIVISION AND STABILITY ASSUMPTIONS

1. *Source*. The procedures for the loading assumption calculations contained in this Appendix conform to Regulation 28 of Annex I of the International Convention for the Prevention of the Pollution from Ships, 1973, done at London, November 2, 1973.

2. *Loading Assumptions*. For the purpose of calculating subdivision and damage stability for a tank vessel, the operating drafts must reflect actual partial or full load conditions consistent with trim and strength of the vessel. Ballast conditions need not be considered if the tank vessel is not carrying oil in cargo tanks excluding oily residues. Loading condition must reflect the specific gravities of the cargo.

3. *Damage Assumptions*.

(a) Damage is applied to all conceivable locations along the length of the vessel as follows:

(1) For a vessel of more than 225 meters in length, anywhere in the vessel's length.

(2) For a vessel of more than 150 meters, but not exceeding 225 meters in length, anywhere in the vessel's length except where the after or forward bulkhead bounding a machinery space located aft is involved in the damage assumption. The machinery space is calculated as a single floodable compartment.

(3) For a vessel 150 meters or less in length, anywhere in the vessel's length between adjacent transverse bulkheads except the machinery space.

(b) The extent and the character of the assumed side or bottom damage, as defined in section 2 of Appendix A of this part, must be applied except longitudinal bottom damage within 0.3L from the forward perpendicular must be assumed to be the same as that for side damage. If any damage of lesser extent results in a more severe condition, such damage must be assumed.

(c) If damage involves transverse bulkheads as specified in paragraphs (a)(1) and (2) of this section, transverse watertight bulkheads must be spaced at least at a distance equal to the longitudinal extent of the assumed damage specified in paragraph (b) of this section in order to be considered effective. Where transverse bulkheads are spaced at a lesser distance, one or more of these bulkheads within such extent of damage must be assumed as nonexistent for the purpose of determining flooded compartments.

(d) If the damages between adjacent transverse watertight bulkheads is within the definition contained in paragraph (a)(3) of this section, no main transverse bulkhead or a transverse bulkhead bounding side tanks or double bottom tanks is to be assumed damaged, unless:

(1) the spacing of the adjacent bulkheads is less than the longitudinal extent of assumed damage defined in paragraph (b) of this section; or

(2) there is a step or a recess in a transverse bulkhead of more than 3.05 meters in length, located within the extent of penetrations of assumed damage. The step formed by the after peak bulkhead and after peak tank top is not regarded as a step for these calculations.

(e) If pipes, ducts, or tunnels are situated within the assumed extent of damage, there must be arrangements so that progressive flooding may not thereby extend to compartments other than those assumed to be floodable for each case of damage.

(f) For oil tankers of 20,000 DWT and above, the damage assumptions must be supplemented by the following assumed bottom raking damage:

(1) Longitudinal extent:

(i) For ships of 75,000 DWT and above, 0.6L measured from the forward perpendicular.

(ii) For ships of less than 75,000 DWT, 0.4L measured from the forward perpendicular.

(2) Transverse extent: B/3 anywhere in the bottom.

(3) Vertical extent: Breach of the outer hull.

4. *Characteristic and Condition Assumption for Calculations*.

(a) Account must be taken of any empty or partially filled tanks, the specific gravity of cargoes carried, and any outflow of liquids from damaged compartments.

(b) The permeabilities are assumed as follows:

Intended space use	Permeability
Stores	0.60
Accommodation	0.95
Machinery	0.85
Voids	0.95
Consumable liquids	[1] 0 or 0.95
Other liquids	[2] 10 or 0.95

[1] Whichever results in the more severe requirements.
[2] The permeability of partially filled compartments must be consistent with actual density and the amount of liquid carried.

(c) The buoyancy of any superstructure directly above the side damage is to be disregarded. The unflooded parts of superstructures beyond the extent of damage may be taken into consideration if they are separated from the damaged space by watertight bulkheads and no progressive flooding of these intact spaces takes place. Class I doors are allowed in watertight bulkheads in the superstructure.

(d) The free surface effect is to be calculated:

(1) at an angle of heel of 5 degrees for each individual compartment; or

(2) by assessing the shift of liquids by moment of transference calculations.

(e) In calculating the effect of free surfaces of consumable liquids, it is to be assumed that, for each type of liquid, at least one transverse pair or a single centerline tank has a free surface and the tank or combination of tanks to be taken into account is to be those where the effect of free surface is the greatest.

[CGD 74–32, 40 FR 48283, Oct. 14, 1975, as amended by USCG–2000–7641, 66 FR 55573, Nov. 2, 2001; USCG–2008–0179, 73 FR 35015, June 19, 2008]

APPENDIX C TO PART 157—PROCEDURE FOR DETERMINING DISTRIBUTION OF SEGREGATED BALLAST TANKS TO PROVIDE PROTECTION AGAINST OIL OUTFLOW IN THE EVENT OF GROUNDING, RAMMING, OR COLLISION

1. *Source*. The procedure for determining the distribution of segregated ballast tanks contained in this appendix conforms to Regulation 18, paragraphs 12–15 of the MARPOL Protocol.

2. *Procedure*. Protective location of segregated ballast tanks, voids, and other spaces that do not carry cargo which are within the cargo tank length is determined from the following:

$\Sigma PA_c + \Sigma PA_s = J[L_t(B + 2D)]$

Where:

PA_c=the side shell area in square meters based on projected molded dimensions for each segregated ballast tank, void, or other space that does not carry cargo and which complies with paragraph 2(b) of this appendix;

PA_s=the bottom shell area in square meters based on projected molded dimensions for each segregated ballast tank, void, or other space that does not carry cargo and which complies with paragraph 2(b) of this appendix;

L_t=the length in meters between the forward and after extremities of the cargo tanks;

B=the maximum breadth of the ship in meters measured amidship to the molded line of the frame; and

D=the molded depth in meters measured vertically from the top of the keel plate to the top of the freeboard deck beam at the side amidships. In tank vessels having rounded gunwales, the molded depth is measured from the top of the keel plate to the point of intersection of the molded lines of the deck and side shell plating, the lines being extended as though the gunwale were of angular design.

(a) *Method of determining a value for J*.

(1) For tank vessels for 20,000 DWT, J=0.45.

(2) For tank vessels of 200,000 DWT or more:

(i) J=0.30; or

(ii) J=the greater of 0.20, or

$$0.30 - \left[a - \frac{(O_c + O_s)}{40_A} \right] ,$$

where:

a=0.25 for tank vessels of 200,000 DWT.
a=0.40 for tank vessels of 300,000 DWT.
a=0.50 for tank vessels of 420,000 DWT.

For values of DWT between 200,000 and 300,000 DWT, 300,000 and 420,000 DWT, and greater than 420,000 DWT, the value of ''a'' is determined by linear interpolation.

O_c = as calculated in Appendix A of this part.
O_s = as calculated in Appendix A of this part.
O_A = the allowable oil outflow meeting § 157.19(b)(1) of this part.

(3) For values of DWT between 20,000 and 200,000 DWT, the value of ''J'' is determined by linear interpolation between 0.45 and 0.30 respectively.

(b) PA_c and PA_s: *Criteria for determining the segregated ballast tanks, voids, and other spaces that do not carry cargo*.

The following criteria are to be met for a segregated ballast tank, void, or space that does not carry cargo, to be used in determining PA_c and PA_s:

(1) The minimum width of each wing tank or space, either of which extends for the full depth of the vessel's side or from the main deck to the top of the double bottoms is 2 meters or more. The width is measured inboard from the vessel's side shell plating at right angles to the vessel's center line. If a wing tank or space has a width anywhere within it that is less than 2 meters, that wing tank or space is not used when calculating PA_c.

(2) The minimum vertical depth of each double bottom tank or space is B/15 or 2 meters, whichever is smaller. If a double bottom tank or space has a depth less than B/15 or 2 meters, whichever is smaller, anywhere within it, the double bottom or space is not to be used when calculating PA_s.

(3) The minimum width of a wing tank or space is not measured in the way of—

(i) the turn of the bilge area; or

(ii) a rounded gunwale area.

(4) The minimum depth of a double bottom tank or space is not measured in the way of the turn of the bilge area.

[CGD 77–058b, 45 FR 43716, June 30, 1980, as amended by USCG–2008–0179, 73 FR 35015, June 19, 2008]

APPENDIX D TO PART 157—EXAMPLE OF A PROCEDURE FOR DEDICATED CLEAN BALLAST TANKS OPERATIONS

1. *Source*. The example procedure for dedicated clean ballast tanks operation contained in this appendix conforms to the Annex of Resolution 14 of the MARPOL Protocol.

2. *Example Procedure*. Dedicated clean ballast tanks operational procedure:

(a) Before arrival at the loading port:

(1) Transfer all remaining oily mixtures to a cargo tank.

(2) Ensure that the pumping and piping designated for clean ballast operation have been properly cleaned to accommodate simultaneous discharge of clean ballast while loading.

(3) Ensure that all valves to the slop tank and the cargo tanks are closed.

(4) Perform visual inspection of all dedicated clean ballast tanks and their contents, if any, for signs of contamination.

(5) Discharge a sufficient amount of clean ballast water to ensure that remaining ballast water and cargo to be loaded will not exceed the permissible deadweight or draft. Leave a sufficient amount of water for flushing the piping, and as a minimum, a quantity equal to 10 times the volume of the affected piping.

(6) Ensure that all valves to the dedicated clean ballast tanks are closed.

(7) If no further ballast discharge is anticipated, drain the clean ballast piping.

(b) In the loading port:

(1) Perform normal loading operations of cargo tanks.

(2) Ensure sufficient slop tank capacity is available for subsequent reception of cargo pump and piping flushings.

(3) When applicable, discharge remaining clean ballast before entire piping system is used for loading. Leave the required minimum quantity of flushing water in ballast tanks.

(4) Ensure that all valves to the dedicated clean ballast tanks are closed.

(5) Ensure that all valves to the cargo tank are closed upon completion of loading.

(c) After departure from the loading port:

(1) Flush appropriate pumping and piping with sufficient water from dedicated clean ballast tanks into a slop tank.

(2) Ensure that valves to the slop tank are closed before pumping the remaining clean water overboard and monitoring oil content of the water.

(3) Ensure that all valves in the dedicated clean ballast tanks are closed.

(d) Before arrival at the unloading port:

(1) Ensure that all valves to the slop tank and cargo tanks are closed.

(2) Recheck that the pumping and piping designated for clean ballast operation have been properly cleaned.

(3) Ballast through clean cargo pumps and piping, considering the port's draft requirements.

(4) Ensure that all valves in the dedicated clean ballast tanks are closed.

(e) In the unloading port:

(1) Allocate pumping and piping intended for clean ballast operation.

(2) Perform normal unloading operations.

(3) As soon as draft conditions permit, complete ballasting to departure conditions.

(4) Ensure that all valves to the dedicated clean ballast tanks are closed.

(5) Complete unloading.

(f) After departure from the unloading port:

(1) Flush pumps and piping servicing the dedicated clean ballast tanks into the slop tank.

(2) Top up dedicated clean ballast tanks.

(3) Process the slop tank content in accordance with load on top (LOT) procedures.

[CGD 77–058b, 45 FR 43717, June 30, 1980, as amended by USCG–2000–7641, 66 FR 55573, Nov. 2, 2001]

APPENDIX E TO PART 157—SPECIFICATIONS FOR THE DESIGN, INSTALLATION AND OPERATION OF A PART FLOW SYSTEM FOR CONTROL OF OVERBOARD DISCHARGES

Source. Appendix 2 to Annex 5 of IMO's Marine Environment Protection Committee document MEPC/Circ. 97. Paragraphs 1 and 2 are printed for information. Paragraphs 3, 4, and 5 are incorporated into §§157.11 and 157.37.

NOTE: Information in square brackets on Figure 1 has been added by the Coast Guard for clarity.

1 *Purpose*

The purpose of these Specifications is to provide specific design criteria and installation and operational requirements for the part flow system referred to in Regulation 18(6)(e) of Annex I of the International Convention for the Prevention of Pollution from Ships, 1973 as modified by the Protocol of 1978 relating thereto.

2 *Application*

2.1 Existing oil tankers may, in accordance with Regulation 18(6)(e) of Annex I of MARPOL 73/78, discharge dirty ballast water and oil contaminated water from cargo tank areas below the waterline, provided part of the flow is led through permanent piping to a readily accessible location on the upper deck or above where it may be visually observed during the discharge operation and provided that the arrangements comply with the requirements established by the Administration and which shall at least contain all the provisions of these Specifications.

2.2 The part flow concept is based on the principle that the observation of a representative part flow of the overboard effluent is equivalent to observing the entire effluent stream. These specifications provide the details of the design installation, and operation of a part flow system.

3 *General Provisions*

3.1 The part flow system shall be so fitted that it can effectively provide a representative sample of the overboard effluent for visual display under all normal operating conditions.

3.2 The part flow system is in many respects similar to the sampling system for an oil discharge monitoring and control system but shall have pumping and piping arrangements separate from such a system, or combined equivalent arrangements acceptable to the Administration.

3.3 The display of the part flow shall be arranged in a sheltered and readily accessible location on the upper deck or above, approved by the Administration (e.g. the entrance to the pump room). Regard should be given to effective communication between the location of the part flow display and the discharge control position.

3.4 Samples shall be taken from relevant sections of the overboard discharge piping and be passed to the display arrangement through a permanent piping system.

3.5 The part flow system shall include the following components:

.1 Sampling probes;

.2 Sample water piping system;

.3 Sample feed pump(s);

.4 Display arrangement;

.5 Sample discharge arrangement; and, subject to the diameter of the sample piping:

.6 Flushing arrangement.

.3.6 The part flow system shall comply with the applicable safety requirements.

4 *System Arrangement*

4.1 Sampling points.

4.1.1 Sampling point locations:

.1 Sampling points shall be so located that relevant samples can be obtained of the effluent being discharged through outlets below the waterline which are being used for operational discharges.

.2 Sampling points shall as far as practicable be located in pipe sections where a turbulent flow is normally encountered.

.3 Sampling points shall as far as practicable be arranged in accessible locations in vertical sections of the discharge piping.

4.1.2 Sampling probes:

.1 Sampling probes shall be arranged to protrude into the pipe a distance of about one fourth of the pipe diameter.

.2 Sampling probes shall be arranged for easy withdrawal for cleaning.

.3 The part flow system shall have a stop valve fitted adjacent to each probe, except that were the probe is mounted in a cargo line, two stop valves shall be fitted in series, in the sample line.

.4 Sampling probes should be of corrosion resistant and oil resistant material, of adequate strength, properly jointed and supported.

.5 Sampling probes shall have a shape that is not prone to becoming clogged by particle contaminants and should not generate high hydrodynamic pressures at the sampling probe tip. Figure 1 is an example of one suitable shape of a sampling probe.

.6 Sampling probes shall have the same nominal bore as the sample piping.

4.2 Sample piping:

.1 The sample piping shall be arranged as straight as possible between the sampling points and the display arrangement. Sharp bends and pockets where settled oil or sediment may accumulate should be avoided.

.2 The sample piping shall be so arranged that sample water is conveyed to the display arrangement within 20 seconds. The flow velocity in the piping should not be less than 2 metres per second.

.3 The diameter of the piping shall not be less than 40 millimetres if no fixed flushing arrangement is provided and shall not be less than 25 millimetres if a pressurized flushing arrangement as detailed in paragraph 4.4 is installed.

.4 The sample piping should be of corrosion-resistant and oil-resistant material, of adequate strength, properly jointed and supported.

.5 Where several sampling points are installed the piping shall be connected to a valve chest at the suction side of the sample feed pump.

4.3 Sample feed pump:

.1 The sample feed pump capacity shall be suitable to allow the flow rate of the sample water to comply with 4.2.2.

4.4 Flushing arrangement:

.1 If the diameter of sample piping is less than 40 millimetres, a fixed connexion from a pressurized sea or fresh water piping system shall be installed to enable flushing of the sample piping system.

4.5 Display arrangement:

.1 The display arrangement shall consist of a display chamber provided with a sight glass. The chamber should be of a size that will allow a free fall stream of the sample water to be clearly visible over a length of at least 200 millimetres. The Administration may approve equivalent arrangements.

.2 The display arrangement shall incorporate valves and piping in order to allow a part of the sample water to bypass the display chamber to obtain a laminar flow for display in the chamber.

.3 The display arrangement shall be designed to be easily opened and cleaned.

.4 The internal of the display chamber shall be white except for the background wall which shall be so coloured in order to facilitate the observation of any change in the quality of the sample water.

.5 The lower part of the display chamber shall be shaped as a funnel for collection of the sample water.

.6 A test cock for taking a grab sample shall be provided in order that a sample of the water can be examined independent of that in the chamber.

.7 The display arrangement shall be adequately lighted to facilitate visual observation of the sample water.

4.6 Sample discharge arrangement:

.1 The sample water leaving the display chamber shall be routed to the sea or to a slop tank through piping of adequate diameter.

5 *Operation*

5.1 When a discharge of dirty ballast water or other oil contaminated water from the cargo tank area is taking place through an outlet below the waterline, the part flow system shall provide sample water from the relevant discharge outlet at all times.

5.2 The sample water should be observed particularly during those phases of the discharge operation when the greatest possibility of oil contamination occurs. The discharge shall be stopped whenever any traces of oil are visible in the flow and when the oil content meter reading indicates oil content exceeds permissible limits.

5.3 On those systems that are fitted with flushing arrangements, the sample piping should be flushed after contamination has been observed and additionally it is recommended that the sample piping be flushed after each period of usage.

5.4 The ship's cargo and ballast handling manuals and, where applicable, those manuals required for crude oil washing systems or dedicated clean ballast tanks operation shall clearly describe the use of the part flow system in conjunction with the ballast discharge and the slop tank decanting procedures.

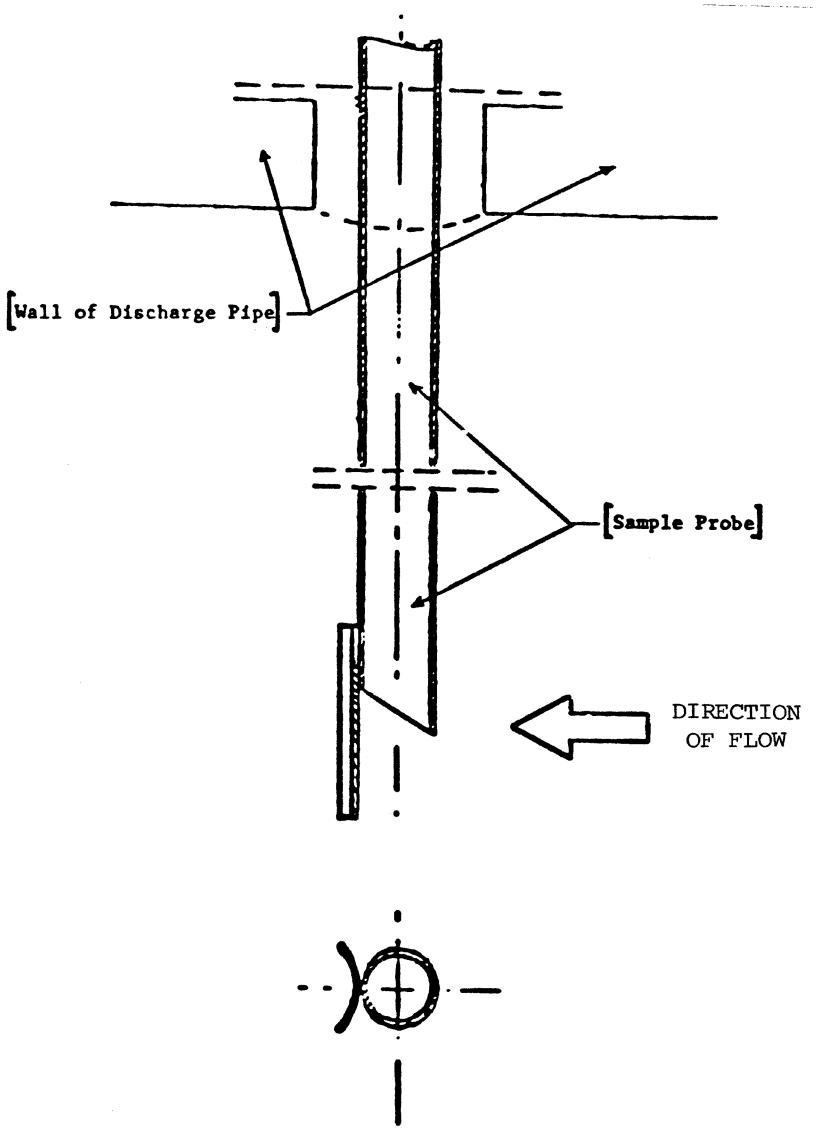

FIGURE 1

SAMPLING PROBE FOR A PART FLOW DISPLAY SYSTEM

[CGD 75–124a, 48 FR 45721, Oct. 6, 1983]

APPENDIX F TO PART 157 [RESERVED]

APPENDIX G TO PART 157—TIMETABLES FOR APPLICATION OF DOUBLE HULL REQUIREMENTS

1. *Source.* These timetables conform to 46 U.S.C. 3703a(c).

2. *Timetables.*

(a) In this section, the age of a vessel is determined from the later of the date on which the vessel is—

(1) Delivered after original construction;

(2) Delivered after completion of a major conversion; or

(3) Qualified for documentation under section 4136 of the Revised Statutes of the United States (46 U.S.C. app. 14).

(b) A vessel of less than 5,000 gross tons for which a building contract or contract for major conversion was placed before June 30, 1990, and that is delivered under that contract before January 1, 1994, and a vessel that had its appraised salvage value determined by the Coast Guard before June 30, 1990, and that qualifies for documentation under section 4136 of the Revised Statutes of the United States (46 U.S.C. app. 14) before January 1, 1994, may not operate in the navigable waters or the Exclusive Economic Zone of the United States after January 1, 2015, unless equipped with a double hull or with a double containment system determined by the Coast Guard to be as effective as a double hull for the prevention of a discharge of oil.

(c) A vessel for which a building contract or contract for major conversion was placed before June 30, 1990, and that is delivered under that contract before January 1, 1994, and a vessel that had its appraised salvage determined by the Coast Guard before June 30, 1990, and that qualifies for documentation under 46 CFR subpart 67.19 before January 1, 1994, may not operate in the navigable waters or Exclusive Economic Zone of the United States unless equipped with a double hull—

(1) In the case of vessel of at least 5,000 gross tons but less than 15,000 gross tons—

(i) After January 1, 1995, if the vessel is 40 years old or older and has a single hull, or is 45 years old or older and has a double bottom or double sides;

(ii) After January 1, 1996, if the vessel is 39 years old or older and has a single hull, or is 44 years old or older and has a double bottom or double sides;

(iii) After January 1, 1997, if the vessel is 38 years old or older and has a single hull, or is 43 years old or older and has a double bottom or double sides;

(iv) After Janaury 1, 1998, is the vessel is 37 years old or older and has a single hull, or is 42 years old or older and has a double bottom or double sides;

(v) After January 1, 1999, if the vessel is 36 years old or older and has a single hull, or is 41 years old or older and has a double bottom or double sides;

(vi) After January 1, 2000, if the vessel is 35 years old or older and has a single hull, or is 40 years old or older and has a double bottom or double sides;

(vii) After January 1, 2005, if the vessel is 25 years old or older and has a single hull, or is 30 years old or older and has a double bottom or double sides;

(2) In the case of a vessel of at least 15,000 gross tons but less than 30,000 gross tons—

(i) After January 1, 1995, if the vessel is 40 years old or older and has a single hull, or is 45 years old or older and has a double bottom or double sides;

(ii) After January 1, 1996, if the vessel is 38 years old or older and has a single hull, or is 43 years old or older and has a double bottom or double sides;

(iii) After January 1, 1997, if the vessel is 36 years old or older and has a single hull, or is 41 years old or older and has a double bottom or double side;

(iv) After January 1, 1998, if the vessel is 34 years old or older and has a single hull, or is 39 years old or older and has a double bottom or double sides;

(v) After January 1, 1999, if the vessel is 32 years old or older and has a single hull, or is 37 years old or older and has a double bottom or double sides;

(vi) After January 1, 2000, if the vessel is 30 years old or older and has a single hull, or is 35 years old or older and has a double bottom or double sides;

(vii) After January 1, 2001, if the vessel is 29 years old or older and has a single hull, or is 34 years old or older and has a double bottom or double sides;

(viii) After January 1, 2002, if the vessel is 28 years old or older and has a single hull, or is 33 years old or older and has a double bottom or double sides;

(ix) After January 1, 2003, if the vessel is 27 years old or older and has a single hull, or is 32 years old or older and has a double bottom or double sides;

(x) After Janaury 1, 2004, if the vessel is 26 years old or older and has a single hull, or is 31 years old or older and has a double bottom or double sides;

(xi) After January 1, 2005, if the vessel is 25 years old or older and has a single hull, or is 30 years old or older and has a double bottom or double sides; and

(3) In the case of a vessel of at least 30,000 gross tons—

(i) After January 1, 1995, if the vessel is 28 years old or older and has a single hull, or is 33 years old or older and has a double bottom or double sides;

(ii) After January 1, 1996, if the vessel is 27 years old or older and has a single hull, or is

32 years old or older and has a double bottom or double sides;

(iii) After January 1, 1997, if the vessel is 26 years old or older and has a single hull, or is 31 years old or older and has a double bottom or double sides;

(iv) After January 1, 1998, if the vessel is 25 years old or older and has a single hull, or is 30 years old or older and has a double bottom or double sides;

(v) After January 1, 1999, if the vessel is 24 years old or older and has a single hull, or is 29 years old or older and has a double bottom or double sides;

(vi) After January 1, 2000, if the vessel is 23 years old or older and has a single hull, or is 28 years old or older and has a double bottom or double sides;

(d) Except as provided in paragraph (b) of this section—

(1) A vessel that has a single hull may not operate after January 1, 2010, and

(2) A vessel that has a double bottom or double sides may not operate after January 1, 2015.

NOTE: Double sides and double bottoms must meet the requirements in §157.10d(c) or (d), as appropriate. A vessel will be considered to have a single hull if it does not have double sides and a double bottom that meet the requirements in §157.10d(c) and §157.10d(d). To determine a tank vessel's double hull compliance date under OPA 90, use the vessel's hull configuration (*i.e.*, single hull; single hull with double sides; or single hull with double bottom) on August 18, 1990. The conversion of a single hull tank vessel to include only double sides or only a double bottom after August 18, 1990, will not result in a change of the vessel's originally scheduled phase-out date. The conversion of a single hull tank vessel to a double hull tank vessel meeting the requirements of §157.10d complies with OPA 90.

[CGD 90–051, 57 FR 36245, Aug. 12, 1992, as amended by USCG–1999–6164, 65 FR 39262, June 23, 2000]

PART 158—RECEPTION FACILITIES FOR OIL, NOXIOUS LIQUID SUBSTANCES, AND GARBAGE

Subpart A—General

Sec.
158.100 Purpose.
158.110 Applicability.
158.115 Penalties for violation.
158.120 Definitions.
158.130 Delegations.
158.133 Which ports and terminals must provide reception facilities?
158.135 Which ports and terminals must have Certificates of Adequacy?
158.140 Applying for a Certificate of Adequacy.
158.150 Waivers and alternatives.
158.160 Issuance and termination of a Certificate of Adequacy.
158.163 Reception facility operations.
158.165 Certificate of Adequacy: Change of information.
158.167 Reporting inadequate reception facilities.

SUSPENSION, REVOCATION, AND APPEALS

158.170 Grounds for suspension.
158.172 Notification of a suspension order.
158.174 Suspension of a Certificate of Adequacy: Procedure.
158.176 Effect of suspension of a Certificate of Adequacy.
158.178 Actions during a suspension.
158.180 Certificate of Adequacy: Procedures after revocation or the part no longer applies.
158.190 Appeals.

Subpart B—Criteria for Reception Facilities: Oily Mixtures

158.200 General.
158.210 Ports and terminals loading crude oil.
158.220 Ports and terminals loading more than 1,000 metric tons of oil other than crude oil or bunker oil.
158.230 Ports and terminals other than ports and terminals under §§158.210, 158.220, and 158.240.
158.240 Ship repair yards.
158.250 Standard discharge connection.

Subpart C—Criteria for Certifying That a Port's or Terminal's Facilities Are Adequate for Receiving NLS Residue

158.300 Purpose.
158.310 Reception facilities: General.
158.320 Reception facilities: Capacity, and exceptions.
158.330 Ports and terminals: Equipment.

Subpart D—Criteria for Adequacy of Reception Facilities: Garbage

158.400 Purpose.
158.410 Reception facilities: General.
158.420 Reception facilities: Capacity and exceptions.

Subpart E—Port and Terminal Operations

158.500 Draining cargo area and piping systems.
158.520 Following the instruction manual.

AUTHORITY: 33 U.S.C. 1903(b), 1905(c); 49 CFR 1.46.

Subpart A—General

SOURCE: CGD 85–010, 52 FR 7761, Mar. 12, 1987, unless otherwise noted.

§ 158.100 Purpose.

This part establishes the following:

(a) Criteria for determining the adequacy of reception facilities.

(b) Procedures for certifying that reception facilities are adequate for receiving—

(1) Oily mixtures from oceangoing tankers and any other oceangoing ships of 400 gross tons or more;

(2) NLS residue from oceangoing ships; or

(3) Garbage from ships.

(c) Standards for ports and terminals to reduce NLS residue.

[CGD 85–010, 52 FR 7761, Mar. 12, 1987, as amended by CGD 88–002, 54 FR 18407, Apr. 28, 1989; USCG–2000–7641, 66 FR 55573, Nov. 2, 2001]

§ 158.110 Applicability.

(a) Subparts B, C, and E apply to each port and each terminal located in the United States or subject to the jurisdiction of the United States that is—

(1) Used by oceangoing tankers, or any other oceangoing ships of 400 gross tons or more, carrying oily mixtures, or by oceangoing ships to transfer NLSs, except those ports and terminals that are used only by—

(i) Tank barges that are not configured and are not equipped to ballast or wash cargo tanks while proceeding enroute;

(ii) Ships carrying NLS operating under waivers under 46 CFR 153.491(b); or

(2) A ship repair yard that services oceangoing ships carrying oil or NLS residue.

(b) Subpart D applies to each port and terminal located in the United States or subject to the jurisdiction of the United States.

[CGD 88–002, 54 FR 18407, Apr. 28, 1989, as amended by USCG–2000–7641, 66 FR 55574, Nov. 2, 2001]

§ 158.115 Penalties for violation.

(a) A person who violates MARPOL 73/78, the Act, or the regulations of this part is liable for a civil penalty not to exceed $25,000 for each violation, as provided by 33 U.S.C. 1908(b)(1). Each day of a continuing violation constitutes a separate violation.

(b) A person who makes a false, fictitious statement or fraudulent representation in any matter in which a statement or representation is required to be made to the Coast Guard under MARPOL 73/78, the Act, or the regulations of this part, is liable for a civil penalty not to exceed $5,000 for each statement or representation, as provided by 33 U.S.C. 1908(b)(2).

(c) A person who knowingly violates MARPOL 73/78, the Act, or the regulations of this part is liable for a fine for each violation, of not more than $50,000 dollars, or imprisonment for not more than 5 years, or both, as provided by 33 U.S.C. 1908(a).

[CGD 88–002, 54 FR 18407, Apr. 28, 1989]

§ 158.120 Definitions.

As used in this part:

Bunker oil means oil loaded into bunker tanks for use as fuel.

Captain of the Port (COTP) means the Coast Guard officer commanding a Captain of the Port Zone described in part 3 of this chapter.

Certificate of Adequacy means a document issued by the Coast Guard or other authorized agency that certifies a port or terminal meets the requirements of this part with respect to reception facilities required under the Act and MARPOL 73/78, and has Form A, Form B, or Form C attached.

Clean ballast has the same meaning as in § 157.03(e) of this chapter.

Commandant means Commandant, U.S. Coast Guard.

Commercial fishing facility means docks, piers, processing houses, or other facilities which receive commercial fishery products from ships.

Daily vessel average means the total number of oceangoing tankers, or any other oceangoing ships of 400 gross tons or more, carrying residues and mixtures containing oil, serviced over a typical continuous 12 month period, divided by 365.

Form A means the application for a reception facility Certificate of Adequacy for oil, Coast Guard form USCG-CG-5401A (9–85).

Form B means the application for a reception facility Certificate of Adequacy for NLS, Coast Guard form USCG-CG-5401B(2–87).

Form C means the application for a Certificate of Adequacy for a Reception Facility for Garbage, Coast Guard form USCG-CG-5401C. ''Garbage'' means all kinds of victual, domestic, and operational waste, excluding fresh fish and parts thereof, generated during the normal operation of the ship and liable to be disposed of continuously or periodically, except dishwater, graywater, and those substances that are defined or listed in other annexes to MARPOL 73/78. ''Harmful substance'' means any substance which, if introduced into the sea, is liable to create hazards to human health, harm living resources and marine life, damage amenities or interfere with other legitimate uses of the sea, and includes any substance subject to control by MARPOL 73/78.

High viscosity NLS includes Category A NLSs having a viscosity of at least 25 mPa.s at 20 °C and of at least 25 mPa.s at the time they are unloaded, high viscosity Category B NLSs, and high viscosity Category C NLSs.

High viscosity Category B NLS means any Category B NLS having a viscosity of at least 25 mPa.s at 20 °C and at least 25 mPa.s at the time it is unloaded.

High viscosity Category C NLS means any Category C NLS having a viscosity of at least 60 mPa.s at 20 °C and at least 60 mPa.s at the time it is unloaded.

MARPOL 73/78 means the International Convention for the Prevention of Pollution from Ships, 1973, as modified by the Protocol of 1978 relating to that Convention. A copy of MARPOL 73/78 is available from the International Maritime Organization, 4 Albert Embankment, London, SE1 7SR, England.

Medical waste means isolation wastes, infectious agents, human blood and blood products, pathological wastes, sharps, body parts, contaminated bedding, surgical wastes and potentially contaminated laboratory wastes, dialysis wastes, and such additional medical items as prescribed by the Administrator of the EPA by regulation. ''Mineral and oil industry shorebase'' means a place or onshore structure or facility which is a base of operations for ships serving the mineral and oil industry.

Noxious liquid substance (NLS) means—

(1) Each substance listed in § 151.47 or § 151.49 of this chapter;

(2) Each substance having an ''A'', ''B'', ''C'', or ''D'' beside it's name in the column headed ''Pollution Category'' in table 1 of 46 CFR Part 153; and

(3) Each substance that is identified as an NLS in a written permission issued under 46 CFR 153.900(d).

Oceangoing ship means a ship that—

(1) Is operated under the authority of the United States and engages in international voyages;

(2) Is operated under the authority of the United States and is certificated for ocean service;

(3) Is operated under the authority of the United States and is certificated for coastwise service beyond three miles from land;

(4) Is operated under the authority of the United States and operates at any time seaward of the outermost boundary of the territorial sea of the United States as defined in § 2.22 of this chapter; or

(5) Is operated under the authority of a country other than the United States.

NOTE: A Canadian or U.S. ship being operated exclusively on the Great Lakes of North America or their connecting and tributary waters, or exclusively on the internal waters of the United States and Canada, is not an ''oceangoing ship.''

Oil means petroleum whether in solid, semi-solid, emulsified, or liquid form, including but not limited to, crude oil, fuel oil, sludge, oil refuse, oil residue, and refined products, and, without limiting the generality of the foregoing, includes the substances listed in Appendix I of Annex I of MARPOL 73/78. ''Oil'' does not include animal and vegetable based oil or noxious liquid substances (NLS) designated under Annex II of MARPOL 73/78.

Oil cargo residue means any residue of oil cargo whether in solid, semi-solid, emulsified, or liquid form from cargo tanks and cargo pump room bilges, including but not limited to, drainages,

leakages, exhausted oil, muck, clingage, sludge, bottoms, paraffin (wax), and any constituent component of oil. The term ''oil cargo residue'' is also known as ''cargo oil residue.''

Oil residue means—

(1) Oil cargo residue; and

(2) Other residue of oil resulting from drainages, leakages, exhausted oil, and other similar occurrences from machinery spaces.

Oily mixture means a mixture, in any form, with any oil content. ''Oily mixture'' includes, but is not limited to—

(1) Slops from bilges;

(2) Slops from oil cargoes (such as cargo tank washings, oily waste, and oily refuse);

(3) Oil residue; and

(4) Oily ballast water from cargo or fuel oil tanks.

Person has the same meaning as in §151.05(n) of this chapter.

Person in charge means an owner, operator, or a person authorized to act on behalf of a port or terminal.

NOTE: The ''person in charge'' under this part is not necessarily the same person as the ''person in charge'' referred to in parts 151, 154, 155, and 156 of this chapter (as defined in §154.105 of this chapter.)

Prewash means a tank washing operation that meets the procedure in 46 CFR 153.1120.

Port means—

(1) A group of terminals that combines to act as a unit and be considered a port for the purposes of this part;

(2) A port authority or other organization that chooses to be considered a port for the purposes of this part; or

(3) A place or facility that has been specifically designated as a port by the COTP.

Reception facility means anything capable of receiving shipboard oily mixtures or NLS residue, or receiving garbage, including, but not limited to—

(1) Fixed piping that conveys residues and mixtures from the ship to a storage or treatment system;

(2) Tank barges, railroad cars, tank trucks, or other mobile facilities;

(3) Containers or other receptacles that are used as temporary storage for garbage; or

(4) Any combination of fixed and mobile facilities. ''Recreational boating facility'' means a facility that is capable of providing wharfage or other services for 10 or more recreational vessels. It includes, but is not limited to, marinas, boatyards, and yacht clubs, but does not include a place or facility containing only an unattended launching ramp.

Regulated NLS cargo includes each Category A or high viscosity or solidifying Category B or C NLS cargo listed in table 1 of 46 CFR Part 153 that contains a reference to §153.908(a) or §153.908(b) in the ''Special Requirements'' column of that table and is unloaded at the port or terminal within a typical continuous 12 month period either before or after application is made for a Certificate of Adequacy.

Residues and mixtures containing NLSs (NLS residue) means—

(1) Any Category A, B, C, or D NLS cargo retained on the ship because it fails to meet consignee specifications;

(2) Any part of a Category A, B, C or D NLS cargo remaining on the ship after the NLS is discharged to the consignee, including but not limited to puddles on the tank bottom and in sumps, clingage in the tanks, and substance remaining in the pipes; or

(3) Any material contaminated with Category A, B, C, or D NLS cargo, including but not limited to bilge slops, ballast, hose drip pan contents, and tank wash water.

Segregated ballast has the same meaning as contained in §157.03(r) of this chapter.

Ship means a vessel of any type whatsoever, operating in the marine environment. This includes hydrofoils, air cushion vehicles, submersibles, floating craft whether self-propelled or not, and fixed or floating drilling rigs or other platforms.

Solidifying NLS means a Category A, B, or C NLS that has a melting point—

(1) Greater than 0 °C but less than 15 °C and a temperature, measured under the procedure in 46 CFR 153.908(d), that is less than 5 °C above its melting point at the time it is unloaded; or

(2) 15 °C or greater and has a temperature, measured under the procedure in 46 CFR 153.908(d), that is less than 10 °C above its melting point at the time it is unloaded.

Tank barge has the same meaning as contained in 46 CFR 30.10–65.

Tanker means a ship constructed or adapted primarily to carry oil in bulk in the cargo spaces.

Terminal means an onshore facility or an offshore structure located in the navigable waters of the United States or subject to the jurisdiction of the United States and used, or intended to be used, as a port or facility for the transfer or other handling of a harmful substance.

NOTE: The Coast Guard interprets commercial fishing facilities, recreational boating facilities, and mineral and oil industry shorebases to be terminals for the purposes of Annex V of MARPOL 73/78, since these facilities normally provide wharfage and other services, including garbage handling, for ships. ''The Act'' means the Act to Prevent Pollution from Ships, as amended, (33 U.S.C. 1901–1911).

The Act means the Act to Prevent Pollution from Ships (94 Stat. 2297, 33 U.S.C. 1901 *et seq*).

[CGD 85–010, 52 FR 7761, Mar. 12, 1987, as amended by CGD 88–002, 54 FR 18407, Apr. 28, 1989; USCG–2000–7641, 66 FR 55574, Nov. 2, 2001; USCG–2008–0179, 73 FR 35015, June 19, 2008]

§ 158.130 Delegations.

Each COTP is delegated the authority to—

(a) Conduct inspections at ports and terminals required to have reception facilities under this part;

(b) Issue Certificates of Adequacy;

(c) Grant waivers under § 158.150;

(d) Designate ports; and

(e) Deny entry of ships to any port or terminal, except when a ship is entering under force majeure, that does not have—

(1) A Certificate of Adequacy if required under § 158.135; or

(2) Reception facilities for garbage required under subpart D of this part.

[CGD 88–002, 54 FR 18408, Apr. 28, 1989]

§ 158.133 Which ports and terminals must provide reception facilities?

(a) A port or terminal which receives oceangoing tankers, or any other oceangoing ship of 400 gross tons or more, carrying oily mixtures, must have a reception facility which meets subpart B of this part.

(b) A port or terminal which receives oceangoing ships carrying NLSs must have a reception facility which meets subpart C of this part.

(c) All ports and terminals under the jurisdiction of the United States, including commercial fishing facilities, mineral and oil shorebases, and recreational boating facilities, must have a reception facility which meets subpart D of this part.

[CGD 88–002, 54 FR 18408, Apr. 28, 1989, as amended by USCG–2000–7641, 66 FR 55574, Nov. 2, 2001]

§ 158.135 Which ports and terminals must have Certificates of Adequacy?

To continue to receive ships, a port or terminal must hold one or more Certificates of Adequacy to show compliance with—

(a) Subpart B of this part if it receives oceangoing tankers, or any other oceangoing ship of 400 gross tons or more, carrying oily mixtures.

(b) Subpart C of this part if it receives oceangoing ships carrying NLSs.

(c) Subpart D of this part if it receives—

(1) The ships under paragraph (a) or (b) of this section; or

(2) Fishing vessels which offload more than 500,000 pounds of commercial fishery products from all ships during a calendar year.

[CGD 88–002, 54 FR 18408, Apr. 28, 1989, as amended by USCG–2000–7641, 66 FR 55574, Nov. 2, 2001]

§ 158.140 Applying for a Certificate of Adequacy.

(a) To continue to receive ships at a port or terminal required by § 158.135 to have a Certificate of Adequacy for its reception facilities, the person in charge must apply to the Coast Guard for a certificate as follows:

(1) Applicants for a Certificate of Adequacy required by § 158.135(a) or (b) must apply to the COTP of the Zone in which the port or terminal is located using Form A or Form B, respectively.

(2) An applicant for a Certificate of Adequacy required by section 158.135(c) must apply on Form C to the COTP of the Zone in which the port or terminal is located.

(b) Applications for Certificates of Adequacy, Forms A, B, or C, may be

obtained from the local Coast Guard COTP.

[CGD 88–002, 54 FR 18408, Apr. 28, 1989, as amended by CGD 96–026, 61 FR 33668, June 28, 1996; 61 FR 36629, July 12, 1996]

§ 158.150 Waivers and alternatives.

(a) If the person in charge believes that a requirement in this part is unreasonable or impracticable for the port's or terminal's operations, the person in charge may submit a request for a waiver to the COTP. This application must—

(1) Be in writing; and

(2) Include the—

(i) Reasons why the requirement is unreasonable or impracticable;

(ii) Proposed alternatives that meet MARPOL 73/78; and

(iii) Additional information requested by the COTP.

(b) If the COTP allows the alternative proposed under paragraph (a)(2)(ii) of this section, the waiver—

(1) Is in writing; and

(2) States each alternative that applies and the requirement under this part for which the alternative is substituted.

(c) The person in charge shall ensure that each waiver issued under paragraph (b) of this section is attached to the Certificate of Adequacy issued for the port or terminal.

§ 158.160 Issuance and termination of a Certificate of Adequacy.

(a) After reviewing an application made under § 158.140(a)(1), the COTP determines by inspection the following:

(1) When the application is made on Form A, whether or not the reception facility meets Subpart B of this part.

(2) When the application is made on Form B, whether or not the reception facility and the port, or the reception facility and the terminal, meet Subpart C of this part.

NOTE: If in the instruction manual required by § 158.330(b) there is a certification by a registered professional engineer licensed by a state or the District of Columbia that the backpressure requirements under § 158.330(a) are met, the COTP determines whether or not to accept this finding.

(b) After the inspections under paragraph (a) are conducted, and after consulting with the Administrator of the Environmental Protection Agency (EPA) or his or her designee, the COTP.

(1) Issues a Certificate of Adequacy to the person in charge for the port or terminal; or

(2) Denies the application and informs the person in charge in writing of the reasons for the denial.

(c) After reviewing an application made under § 158.140(a)(2), the COTP—

(1) Issues a Certificate of Adequacy to the person in charge for the port or terminal; or

(2) Denies the application and informs the person in charge in writing of the reasons for the denial.

(d) In order to remain valid, the Certificate of Adequacy must have attached to it any waivers that are granted under § 158.150 when the Certificate of Adequacy is issued.

(e) Each Certificate of Adequacy remains valid for a period of five years or until—

(1) Suspended;

(2) Revoked; or

(3) This part no longer applies to the port or terminal.

[CGD 88–002, 54 FR 18408, Apr. 28, 1989, as amended by CGD 96–026, 61 FR 33668, June 28, 1996; USCG–2010–0351, 75 FR 36286, June 25, 2010]

§ 158.163 Reception facility operations.

(a) Each person in charge and each person who is in charge of a reception facility shall ensure that the reception facility does not operate in a manner that violates any requirement under this part.

(b) A copy of the Certificate of Adequacy issued for the port or terminal must be—

(1) At each port and terminal under this part; and

(2) Available for inspection by the COTP and the master, operator, person who is in charge of a ship, or agent for a ship.

(c) Ports and terminals required to have an Operations Manual under this chapter or 46 CFR Chapter 1 must have a copy of the Certificate of Adequacy issued for the port or terminal, including any waivers, attached to that Operations Manual.

[CGD 85–010, 52 FR 7761, Mar. 12, 1987, as amended by CGD 88–002, 54 FR 18409, Apr. 28, 1989]

§ 158.165 Certificate of Adequacy: Change of information.

(a) Except as required in paragraph (b) of this section, the person in charge shall notify the COTP in writing within 10 days after any information required in section 2, 3A, 3G, or 3H, of Form A or section 2, 5A, or 5C of Form B changes.

(b) The person in charge shall notify the COTP in writing within 30 days after any information required in the following is changed:

(1) Form A, sections 1, 3B, 3C, 3E, 3F, 3I, or 3J.

(2) Form B, sections 1, 3, 4, 5B, 5D, 5E, 5F or 5G.

(3) Form C, sections A1, B1, B2, or D4.

(c) The person in charge shall maintain at the port or terminal a copy of the information submitted under paragraphs (a) and (b) of this section, until a corrected Certificate of Adequacy is received from the COTP.

[CGD 85–010, 52 FR 7761, Mar. 12, 1987, as amended by CGD 88–002, 54 FR 18409, Apr. 28, 1989; 55 FR 35988, Sept. 4, 1990]

§ 158.167 Reporting inadequate reception facilities.

Any person may report to the local Coast Guard COTP that reception facilities required by these regulations or MARPOL 73/78 are inadequate. Reports of inadequate reception facilities may be made orally, in writing or by telephone.

[CGD 88–002, 54 FR 18409, Apr. 28, 1989]

SUSPENSION, REVOCATION, AND APPEALS

§ 158.170 Grounds for suspension.

The COTP may suspend a Certificate of Adequacy if—

(a) Deficiencies recur or significantly affect the adequacy of the reception facility;

(b) Continued operations will result in undue delay to ships calling at the port or terminal;

(c) There is a failure to accept NLS residue from a ship after it's cargo tanks are prewashed in accordance with 46 CFR 153.1120; or

(d) There is a substantial threat of discharge of oil or NLS into or upon the navigable waters of the United States or adjoining shorelines.

§ 158.172 Notification of a suspension order.

(a) If the COTP has grounds for an immediate suspension of or is considering suspending a Certificate of Adequacy, the COTP notifies the person in charge of the intended action. Each notification of a suspension order, whether oral or written, includes—

(1) The grounds for the suspension;

(2) The date when the suspension becomes effective; and

(3) Information on how the suspension may be withdrawn, including all corrective actions required.

(b) If the suspension order is made orally, the COTP issues a suspension order in writing within five days after the initial notification.

§ 158.174 Suspension of a Certificate of Adequacy: Procedure.

(a) If no evidence or arguments are submitted in response to a notification of a suspension order, the suspension is effective on the date stated in the order.

(b) If any petition for withdrawing a suspension order is submitted in response to a notification of a suspension order, the COTP considers the evidence or arguments and notifies the person in charge of any action taken including—

(1) Denial of the petition for withdrawing a suspension order;

(2) Initiation of civil or criminal penalty action under subpart 1.07 of part 1 of this chapter; or

(3) Withdrawing the suspension order.

§ 158.176 Effect of suspension of a Certificate of Adequacy.

After the COTP notifies the person in charge and places a suspension order in effect, the COTP denies entry of ships to the port or terminal while the Certificate of Adequacy is suspended.

§ 158.178 Actions during a suspension.

(a) If a Certificate of Adequacy is suspended for longer than a five day period, the person in charge shall return it to the COTP within five days after the suspension becomes effective.

(b) After the suspension is in effect, the COTP may—

(1) Terminate the suspension order after receiving information from the

person in charge that corrective action has been taken; or

(2) Revoke the Certificate of Adequacy if no significant action is undertaken by the person in charge to meet any measures ordered by the COTP.

§ 158.180 Certificate of Adequacy: Procedures after revocation or the part no longer applies.

(a) If a Certificate of Adequacy is revoked, the person in charge shall return it to the COTP within five days after the revocation becomes effective.

(b) When this part no longer applies to the port or terminal, the person in charge shall return the Certificate of Adequacy to the COTP within 30 days after this part no longer applies.

(c) After the Certificate of Adequacy has been returned to the COTP under paragraph (a) or (b) of this section, an application for a new Certificate of Adequacy may be submitted under § 158.140.

§ 158.190 Appeals.

(a) Any person directly affected by an action taken under this part may request reconsideration by the Coast Guard officer responsible for that action.

(b) Except as provided under paragraph (e) of this section, the person affected who is not satisfied with a ruling after having it reconsidered under paragraph (a) of this section may—

(1) Appeal that ruling in writing within 30 days after the ruling to the Coast Guard District Commander of the district in which the action was taken; and

(2) Supply supporting documentation and evidence that the appellant wishes to have considered.

(c) The District Commander issues a ruling after reviewing the appeal submitted under paragraph (b) of this section. Except as provided under paragraph (e) of this section, the person affected who is not satisfied with this ruling may—

(1) Appeal that ruling in writing within 30 days after the ruling to the Assistant Commandant for Marine Safety, Security and Environmental Protection, U.S. Coast Guard, (CG–5), 2100 2nd St. SW., Stop 7355, Washington, DC 20593–7355; and

(2) Supply supporting documentation and evidence that the appellant wishes to have considered.

(d) After reviewing the appeal submitted under paragraph (c) of this section, the Assistant Commandant for Marine Safety, Security and Environmental Protection issues a ruling which is final agency action.

(e) If the delay in presenting a written appeal has an adverse impact on the operations of the appellant, the appeal under paragraph (b) or (c) of this section—

(1) May be presented orally; and

(2) Must be submitted in writing within five days after the oral presentation—

(i) With the basis for the appeal and a summary of the material presented orally; and

(ii) To the same Coast Guard official who heard the oral presentation.

[CGD 85–010, 52 FR 7761, Mar. 12, 1987, as amended by CGD 96–026, 61 FR 33668, June 28, 1996; CGD 97–023, 62 FR 33364, June 19, 1997; USCG–2002–12471, 67 FR 41333, June 18, 2002; USCG–2010–0351, 75 FR 36286, June 25, 2010]

Subpart B—Criteria for Reception Facilities: Oily Mixtures

SOURCE: CGD 78–035, 50 FR 36793, Sept. 9, 1985, unless otherwise noted.

§ 158.200 General.

(a) Except as allowed in paragraph (b) of this section, the facility used to meet Regulation 12 of Annex I to MARPOL 73/78 must—

(1) Be a reception facility as defined under § 158.120 that is available at the port or terminal;

(2) Hold each Federal, State, and local permit and license required by environmental laws and regulations concerning oily mixtures; and

(3) Be capable of—

(i) Receiving oily mixtures from oceangoing ships within 24 hours after notice by that ship;

(ii) Completing the reception of ballast water containing oily mixtures from the ship in less than 10 hours after waste transfer operations begin; and

(iii) Completing the reception of other oily mixtures in less than 4 hours after the transfer operation begins.

(b) Reception facilities for ship repair yards do not have to meet paragraphs (a)(3)(i) through (a)(3)(iii) of this section, but must be capable of completing transfer of oily mixtures from each oceangoing ship before the ship departs from the ship repair yard.

[CGD 78–035, 50 FR 36793, Sept. 9, 1985, as amended by CGD 85–010, 52 FR 7764, Mar. 12, 1987; USCG–2000–7641, 66 FR 55574, Nov. 2, 2001]

§ 158.210 Ports and terminals loading crude oil.

The reception facility for a crude oil loading port or terminal must have the capacity for receiving—

(a) Oil residue from on-board fuel and lubricating oil processing in the amount of 10 metric tons (11 short tons);

(b) Bilge water containing oily mixtures in the amount of 10 metric tons (11 short tons) or 2 metric tons (2.2 short tons) multiplied by the daily vessel average, whichever quantity is greater; and

(c) Ballast water containing oily mixtures in the amount of 30% of the deadweight tonnage of the largest of the oceangoing tankers loading crude oil at the port or terminal that do not have clean ballast tanks (CBT), segregated ballast tanks (SBT), or crude oil washing (COW) meeting part 157 of this subchapter, multiplied by one or the daily vessel average, whichever quantity is greater.

[CGD 78–035, 50 FR 36793, Sept. 9, 1985, as amended by CGD 85–010, 52 FR 7764, Mar. 12, 1987; USCG–2000–7641, 66 FR 55574, Nov. 2, 2001]

§ 158.220 Ports and terminals loading more than 1,000 metric tons of oil other than crude oil or bunker oil.

The reception facility for an oil loading port or terminal that loads a daily average of more than 1,000 metric tons (1,100 short tons) of oil other than crude oil or bunker oil to oceangoing tankers must have the capacity for receiving—

(a) Oil residue from on-board fuel and lubricating oil processing in the amount of 10 metric tons (11 short tons);

(b) Bilge water containing oily mixtures in the amount of 10 metric tons (11 short tons) or 2 metric tons (2.2 short tons) multiplied by the daily vessel average, whichever quantity is greater;

(c) Ballast water containing oily mixtures in the amount of 30% of the deadweight tonnage of the largest of the oceangoing tankers loading oil other than crude oil or bunker oil, at the port or terminal, that do not have CBT or SBT meeting part 157 of this chapter, multiplied by one or the daily vessel average, whichever quantity is greater; and

(d) Oil cargo residue in the amount of 0.2% of the total cargo capacity of the largest of the oceangoing tankers loading oil other than crude oil or bunker oil, at the port or terminal, multiplied by one or the daily vessel average, whichever quantity is greater.

[CGD 78–035, 50 FR 36793, Sept. 9, 1985, as amended by CGD 85–010, 52 FR 7764, Mar. 12, 1987; USCG–2000–7641, 66 FR 55574, Nov. 2, 2001]

§ 158.230 Ports and terminals other than ports and terminals under §§ 158.210, 158.220, and 158.240.

Reception facilities for ports and terminals other than those under §§ 158.210, 158.220, and 158.240 of this subpart and those that are used exclusively by non-self-propelled tank barges, must have the capacity for receiving—

(a) Oil residue from on-board fuel and lubricating oil processing in the amount of 10 metric tons (11 short tons), or 1 metric ton (1.1 short tons) multiplied by the daily vessel average, whichever quantity is greater; and

(b) Bilge water containing oily mixtures in the amount of 10 metric tons (11 short tons) or 2 metric tons (2.2 short tons) multiplied by the daily vessel average, whichever quantity is greater.

[CGD 78–035, 50 FR 36793, Sept. 9, 1985, as amended by CGD 85–010, 52 FR 7764, Mar. 12, 1987; USCG–2000–7641, 66 FR 55574, Nov. 2, 2001]

§ 158.240 Ship repair yards.

The reception facility that services oceangoing ships using a ship repair yard must have a capacity for receiving—

(a) An amount of ballast from bunker tanks, and the wash water and oil residue from the cleaning of bunker tanks and oil residue (sludge) tanks, equal to 8 percent of the bunker capacity of the largest oceangoing ship serviced;

(b) An amount of solid oil cargo residues from cargo tanks equal to 0.1 percent of the deadweight tonnage of the largest oceangoing tanker serviced;

(c) An amount of ballast water containing oily mixtures and wash water from in-port tank washing equal to—

(1) 1,500 metric tons (1,650 short tons), or;

(2) 4½% of the deadweight tonnage of the largest oceangoing tanker serviced; and

(d) An amount of liquid oil cargo residue based on the following percentages of deadweight tonnage of the largest oceangoing tanker serviced:

(1) For crude oil oceangoing tankers, 1%.

(2) For black product oceangoing tankers, 0.5%

(3) For white product oceangoing tankers, 0.2%

[CGD 78–035, 50 FR 36793, Sept. 9, 1985, as amended by USCG–2000–7641, 66 FR 55574, Nov. 2, 2001]

§ 158.250 Standard discharge connection.

Each reception facility that received bilge water containing oily mixtures must have a standard discharge connection that—

(a) Meets § 155.430 of this subchapter; and

(b) Attaches to each hose or pipe that removes bilge water containing oily mixtures from oceangoing ships.

[CGD 78–035, 50 FR 36793, Sept. 9, 1985, as amended by USCG–2000–7641, 66 FR 55574, Nov. 2, 2001]

Subpart C—Criteria for Certifying That a Port's or Terminal's Facilities Are Adequate for Receiving NLS Residue

SOURCE: CGD 85–010, 52 FR 7764, Mar. 12, 1987, unless otherwise noted.

§ 158.300 Purpose.

The purpose of this subpart is to supply the criteria needed for ports and terminals under § 158.110 used by oceangoing ships carrying NLS cargo or NLS residue to meet Regulation 7 of Annex II to MARPOL 73/78.

§ 158.310 Reception facilities: General.

(a) Except as allowed in paragraph (b) of this section, each reception facility, in order to pass the inspection under § 158.160, must—

(1) Be a reception facility as defined under § 158.120;

(2) Be available at the port or terminal;

(3) Meet the requirements of § 158.320;

(4) Hold each Federal, State, and local permit and license required by environmental laws and regulations concerning NLS residue;

(5) Be capable of receiving NLS residue from an oceangoing ship within 24 hours after notice by that ship of the need for reception facilities; and

(6) Be capable of completing the transfer of NLS residue within 10 hours after the transfer of NLS residue begins.

(b) A reception facility for a ship repair yard does not have to meet the requirements of paragraphs (a)(5) and (a)(6) of this section if it is capable of completing transfer of NLS residue from an oceangoing ship before the ship departs from the yard.

§ 158.320 Reception facilities: Capacity, and exceptions.

(a) Except as allowed in paragraph (b) of this section, each day the port or terminal is in operation, the port or terminal must have a reception facility that is capable of receiving—

(1) 75 cubic meters (19,810 gallons) of NLS residue for each regulated NLS cargo that is a solidifying Category A NLS; or

(2) 50 cubic meters (13,210 gallons) of NLS residue for each regulated NLS cargo that is not a solidifying Category A.

(b) The port or terminal need only meet § 158.330 if it is used by ships that only transfer Category B or C NLS cargoes that are not high viscosity or solidifying Category B or C NLSs.

(c) For each category of NLS cargo carried on a ship, each day a ship repair yard is in operation and being used

by a ship that must discharge NLS residue in order to proceed with repair work, the ship repair yard must have a reception facility that is capable of receiving—

(1) 50 cubic meters (13,210 gallons) of NLS residue that contains a—

(i) Category A NLS that is not a solidifying NLS;

(ii) Category B NLS; or

(iii) Category C NLS; or

(iv) Category D NLS; or

(2) 75 cubic meters (19,810 gallons) of NLS residue that contains a Category A NLS that is a solidifying NLS cargo.

§ 158.330 Ports and terminals: Equipment.

Each port and terminal except ship repair yards, in order to pass the inspection under § 158.160, must—

(a) At mean low tide and with the ship's manifold 10 feet above the surface of the water, be capable of receiving Category B or C NLS cargo during the stripping operations at an average flow rate of 6 cubic meters (1584 gallons) per hour without the backpressure at the ship's manifold exceeding 101.6 kPa (14.7 pounds per square inch gauge) pressure; and

(b) Have an instruction manual that lists the equipment and procedures for meeting paragraph (a) of this section. The instruction manual may be made part of the operations manual that is required under § 154.300 of this chapter.

Subpart D—Criteria for Adequacy of Reception Facilities: Garbage

SOURCE: CGD 88–002, 54 FR 18409, Apr. 28, 1989, unless otherwise noted.

§ 158.400 Purpose.

The purpose of this subpart is to supply the criteria for determining the adequacy of reception facilities for garbage at ports and terminals that receive ships and to comply with the Act and Regulation 7 of Annex V to MARPOL 73/78.

§ 158.410 Reception facilities: General.

(a) Except as allowed in paragraph (b) of this section, the person in charge of a port or terminal shall ensure that each port or terminal's reception facility.

(1) Is capable after August 28, 1989 of receiving APHIS regulated garbage at a port or terminal no later than 24 hours after notice under § 151.65 of this chapter is given to the port or terminal, unless it only receives ships that—

(i) Operate exclusively within the navigable waters of the United States;

(ii) Operate exclusively between ports or terminals in the continental United States; or

(iii) Operate exclusively between continental United States ports or terminals and Canadian ports or terminals.

(2) Is capable of receiving medical wastes or hazardous wastes defined in 40 CFR 261.3, unless the port or terminal operator can provide to the master, operator, or person in charge of a ship, a list of persons authorized by federal, state, or local law or regulation to transport and treat such wastes;

(3) Is arranged so that it does not interfere with port or terminal operations;

(4) Is conveniently located so that mariners unfamiliar with the port or terminal can find it easily and so that it's use will not be discouraged;

(5) Is situated so that garbage from ships which has been placed in it cannot readily enter the water; and

(6) Holds each federal, state, and local permit or license required by environmental and public health laws and regulations concerning garbage handling.

(b) A reception facility for a ship repair yard does not have to meet the requirements of paragraph (a)(1) of this section if it is capable of handling the transfer of garbage from a ship before the ship departs from the yard.

NOTE: The U.S. Department of Agriculture's Animal and Plant Health Inspection Service (APHIS) requires victual wastes or garbage contaminated by victual wastes, except from vessels that operate only between the continental United States and Canadian ports, to be incinerated or sterilized in accordance with their regulations in 7 CFR 330.400 and 9 CFR 94.5.

§ 158.420 Reception facilities: Capacity and exceptions.

Each day a port or terminal is in operation, the person in charge of a port or terminal must provide, or ensure the

availability of, a reception facility that is capable of receiving all garbage that the master or person who is in charge of a ship desires to discharge, except—

(a) Large quantities of spoiled or damaged cargoes not usually discharged by a ship; or

(b) Garbage from ships not having commercial transactions with that port or terminal.

Subpart E—Port and Terminal Operations

SOURCE: CGD 85–010, 52 FR 7765, Mar. 12, 1987, unless otherwise noted. Redesignated by CGD 88–002, 54 FR 18409, Apr. 28, 1989.

§ 158.500 Draining cargo area and piping systems.

The person in charge shall ensure that each cargo hose and each piping system containing NLS received from each oceangoing ship carrying NLS cargo is not drained back into the ship.

§ 158.520 Following the instruction manual.

The person in charge shall ensure that the instruction manual under § 158.330(b) is followed during the transfer of any NLS.

PART 159—MARINE SANITATION DEVICES

Subpart A—General

Sec.
159.1 Purpose.
159.3 Definitions.
159.4 Incorporation by reference.
159.5 Requirements for vessel manufacturers.
159.7 Requirements for vessel operators.

Subpart B—Certification Procedures

159.11 Purpose.
159.12 Regulations for certification of existing devices.
159.12a Certification of certain Type III devices.
159.14 Application for certification.
159.15 Certification.
159.16 Authorization to label devices.
159.17 Changes to certified devices.
159.19 Testing equivalency.

Subpart C—Design, Construction, and Testing

159.51 Purpose and scope.
159.53 General requirements.
159.55 Identification.
159.57 Installation, operation, and maintenance instructions.
159.59 Placard.
159.61 Vents.
159.63 Access to parts.
159.65 Chemical level indicator.
159.67 Electrical component ratings.
159.69 Motor ratings.
159.71 Electrical controls and conductors.
159.73 Conductors.
159.75 Overcurrent protection.
159.79 Terminals.
159.81 Baffles.
159.83 Level indicator.
159.85 Sewage removal.
159.87 Removal fittings.
159.89 Power interruption: Type I and II devices.
159.93 Independent supporting.
159.95 Safety.
159.97 Safety: inspected vessels.
159.101 Testing: general.
159.103 Vibration test.
159.105 Shock test.
159.107 Rolling test.
159.109 Pressure test.
159.111 Pressure and vacuum pulse test.
159.115 Temperature range test.
159.117 Chemical resistance test.
159.119 Operability test; temperature range.
159.121 Sewage processing test.
159.123 Coliform test: Type I devices.
159.125 Visible floating solids: Type I devices.
159.126 Coliform test: Type II devices.
159.126a Suspended solids test: Type II devices.
159.127 Safety coliform count: Recirculating devices.
159.129 Safety: Ignition prevention test.
159.131 Safety: Incinerating device.

Subpart D—Recognition of Facilities

159.201 Recognition of facilities.

Subpart E—Discharge of Effluents in Certain Alaskan Waters by Cruise Vessel Operations

159.301 Purpose.
159.303 Applicability.
159.305 Definitions.
159.307 Untreated sewage.
159.309 Limitations on discharge of treated sewage or graywater.
159.311 Safety exception.
159.313 Inspection for compliance and enforcement.
159.315 Sewage and graywater discharge record book.

159.317 Sampling and reporting.
159.319 Fecal coliform and total suspended solids standards.
159.321 Enforcement.

AUTHORITY: 33 U.S.C. 1322(b)(1); 49 CFR 1.45(b). Subpart E also issued under authority of sec. 1(a)(4), Pub. L. 106–554, 114 Stat. 2763; Department of Homeland Security Delegation No. 0170.1.

SOURCE: CGD 73–83, 40 FR 4624, Jan. 30, 1975, unless otherwise noted.

EDITORIAL NOTE: Nomenclature changes to part 159 appear by USCG–2008–0179, 73 FR 35015, June 19, 2008.

Subpart A—General

§ 159.1 Purpose.

This part prescribes regulations governing the design and construction of marine sanitation devices and procedures for certifying that marine sanitation devices meet the regulations and the standards of the Environmental Protection Agency promulgated under section 312 of the Federal Water Pollution Control Act (33 U.S.C. 1322), to eliminate the discharge of untreated sewage from vessels into the waters of the United States, including the territorial seas. Subpart A of this part contains regulations governing the manufacture and operation of vessels equipped with marine sanitation devices.

§ 159.3 Definitions.

In this part:

Coast Guard means the Commandant or his authorized representative.

Discharge includes, but is not limited to, any spilling, leaking, pouring, pumping, emitting, emptying, or dumping.

Existing vessel includes any vessel, the construction of which was initiated before January 30, 1975.

Fecal coliform bacteria are those organisms associated with the intestine of warm-blooded animals that are commonly used to indicate the presence of fecal material and the potential presence of organisms capable of causing human disease.

Inspected vessel means any vessel that is required to be inspected under 46 CFR Ch. I.

Length means a straight line measurement of the overall length from the foremost part of the vessel to the aftermost part of the vessel, measured parallel to the centerline. Bow sprits, bumpkins, rudders, outboard motor brackets, and similar fittings or attachments are not to be included in the measurement.

Manufacturer means any person engaged in manufacturing, assembling, or importing of marine sanitation devices or of vessels subject to the standards and regulations promulgated under section 312 of the Federal Water Pollution Control Act.

Marine sanitation device and *device* includes any equipment for installation on board a vessel which is designed to receive, retain, treat, or discharge sewage, and any process to treat such sewage.

New vessel includes any vessel, the construction of which is initiated on or after January 30, 1975.

Person means an individual, partnership, firm, corporation, or association, but does not include an individual on board a public vessel.

Public vessel means a vessel owned or bare-boat chartered and operated by the United States, by a State or political subdivision thereof, or by a foreign nation, except when such vessel is engaged in commerce.

Recognized facility means any laboratory or facility listed by the Coast Guard as a recognized facility under this part.

Sewage means human body wastes and the wastes from toilets and other receptacles intended to receive or retain body waste.

Territorial seas means the belt of the seas measured from the line of ordinary low water along that portion of the coast which is in direct contact with the open sea and the line marking the seaward limit of inland waters, and extending seaward a distance of 3 miles.

Type I marine sanitation device means a device that, under the test conditions described in §§ 159.123 and 159.125, produces an effluent having a fecal coliform bacteria count not greater than 1,000 per 100 milliliters and no visible floating solids.

Type II marine sanitation device means a device that, under the test conditions

described in §§ 159.126 and 159.126a, produces an effluent having a fecal coliform bacteria count not greater than 200 per 100 milliliters and suspended solids not greater than 150 milligrams per liter.

Type III marine sanitation device means a device that is designed to prevent the overboard discharge of treated or untreated sewage or any waste derived from sewage.

Uninspected vessel means any vessel that is not required to be inspected under 46 CFR Chapter I.

United States includes the States, the District of Columbia, the Commonwealth of Puerto Rico, the Virgin Islands, Guam, American Samoa, the Canal Zone, and the Trust Territory of the Pacific Islands.

Vessel includes every description of watercraft or other artificial contrivance used, or capable of being used, as a means of transportation on the waters of the United States.

[CGD 96–026, 61 FR 33668, June 28, 1996, as amended by CGD 95–028, 62 FR 51194, Sept. 30, 1997]

§ 159.4 Incorporation by reference.

(a) Certain material is incorporated by reference into this part with the approval of the Director of the Federal Register under 5 U.S.C. 552(a) and 1 CFR part 51. To enforce any edition other than that specified in paragraph (b) of this section, the Coast Guard must publish notice of change in the FEDERAL REGISTER; and the material must be available to the public. All approved material is available for inspection at the Engineering Division, U.S. Coast Guard Marine Safety Center, 2100 2nd St. SW., Stop 7102, Washington, DC 20593–7102, and at the National Archives and Records Administration (NARA). For information on the availability of this material at NARA, call 202–741–6030, or go to: *http://www.archives.gov/federal_register/code_of_federal_regulations/ibr_locations.html*. All approved material is available from the sources indicated in paragraph (b) of this section.

(b) The material approved for incorporation by reference in this part, and the sections affected, are as follows:

American Society for Testing and Materials (ASTM)

100 Barr Harbor Drive, West Conshohocken, PA 19428–2959.

ASTM E 11–95, Standard Specification for Wire Cloth and Sieves for Testing Purposes—159.125

[USCG–1999–5151, 64 FR 67176, Dec. 1, 1999, as amended by USCG–2001–9286, 66 FR 33641, June 25, 2001; 69 FR 18803, Apr. 9, 2004; USCG–2010–0351, 75 FR 36286, June 25, 2010]

§ 159.5 Requirements for vessel manufacturers.

No manufacturer may manufacture for sale, sell, offer for sale, or distribute for sale or resale any vessel equipped with installed toilet facilities unless it is equipped with:

(a) An operable Type II or III device that has a label on it under § 159.16 or that is certified under § 159.12 or § 159.12a; or

(b) An operable Type I device that has a label on it under § 159.16 or that is certified under § 159.12, if the vessel is 19.7 meters (65 feet) or less in length.

[CGD 95–028, 62 FR 51194, Sept. 30, 1997]

§ 159.7 Requirements for vessel operators.

(a) No person may operate any vessel equipped with installed toilet facilities unless it is equipped with:

(1) An operable Type II or III device that has a label on it under § 159.16 or that is certified under § 159.12 or § 159.12a; or

(2) An operable Type I device that has a label on it under § 159.16 or that is certified under § 159.12, if the vessel is 19.7 meters (65 feet) or less in length.

(b) When operating a vessel on a body of water where the discharge of treated or untreated sewage is prohibited by the Environmental Protection Agency under 40 CFR 140.3 or 140.4, the operator must secure each Type I or Type II device in a manner which prevents discharge of treated or untreated sewage. Acceptable methods of securing the device include—

(1) Closing the seacock and removing the handle;

(2) Padlocking the seacock in the closed position;

(3) Using a non-releasable wire-tie to hold the seacock in the closed position; or

(4) Locking the door to the space enclosing the toilets with a padlock or door handle key lock.

(c) When operating a vessel on a body of water where the discharge of untreated sewage is prohibited by the Environmental Protection Agency under 40 CFR 140.3, the operator must secure each Type III device in a manner which prevents discharge of sewage. Acceptable methods of securing the device include—

(1) Closing each valve leading to an overboard discharge and removing the handle;

(2) Padlocking each valve leading to an overboard discharge in the closed position; or

(3) Using a non-releasable wire-tie to hold each valve leading to an overboard discharge in the closed position.

[CGH 95–028, 62 FR 51194, Sept. 30, 1997]

Subpart B—Certification Procedures

§ 159.11 Purpose.

This subpart prescribes procedures for certification of marine sanitation devices and authorization for labels on certified devices.

§ 159.12 Regulations for certification of existing devices.

(a) The purpose of this section is to provide regulations for certification of existing devices until manufacturers can design and manufacture devices that comply with this part and recognized facilities are prepared to perform the testing required by this part.

(b) Any Type III device that was installed on an existing vessel before January 30, 1975, is considered certified.

(c) Any person may apply to the Commanding Officer, USCG Marine Safety Center, 2100 2nd St. SW., Stop 7102, Washington, DC 20593–7102 for certification of a marine sanitation device manufactured before January 30, 1976. The Coast Guard will issue a letter certifying the device if the applicant shows that the device meets § 159.53 by:

(1) Evidence that the device meets State standards at least equal to the standards in § 159.53, or

(2) Test conducted under this part by a recognized laboratory, or

(3) Evidence that the device is substantially equivalent to a device certified under this section, or

(4) A Coast Guard field test if considered necessary by the Coast Guard.

(d) The Coast Guard will maintain and make available a list that identifies each device certified under this section.

(e) Devices certified under this section in compliance with § 159.53 need not meet the other regulations in this part and may not be labeled under § 159.16.

[CGD 73–83, 40 FR 4624, Jan. 30, 1975, as amended by CGD 75–213, 41 FR 15325, Apr. 12, 1976; CGD 82–063a, 48 FR 4776, Feb. 3, 1983; CGD 88–052, 53 FR 25122, July 1, 1988; CGD 96–026, 61 FR 33668, June 28, 1996; USCG–2001–9286, 66 FR 33641, June 25, 2001; USCG–2010–0351, 75 FR 36286, June 25, 2010]

§ 159.12a Certification of certain Type III devices.

(a) The purpose of this section is to provide regulations for certification of certain Type III devices.

(b) Any Type III device is considered certified under this section if:

(1) It is used solely for the storage of sewage and flushwater at ambient air pressure and temperature; and

(2) It is in compliance with § 159.53(c).

(c) Any device certified under this section need not comply with the other regulations in this part except as required in paragraphs (b)(2) and (d) of this section and may not be labeled under § 159.16.

(d) Each device certified under this section which is installed aboard an inspected vessel must comply with § 159.97.

[CGD 76–145, 42 FR 11, Jan. 3, 1977]

§ 159.14 Application for certification.

(a) Any manufacturer may apply to any recognized facility for certification of a marine sanitation device. The application for certification must indicate whether the device will be used aboard all vessels or only aboard uninspected vessels and to which standard in § 159.53 the manufacturer requests the device to be tested.

(b) An application may be in any format but must be in writing and must

be signed by an authorized representative of the manufacturer and include or be accompanied by:

(1) A complete description of the manufacturer's production quality control and inspection methods, record keeping systems pertaining to the manufacture of marine sanitation devices, and testing procedures;

(2) The design for the device, including drawings, specifications and other information that describes the materials, construction and operation of the device;

(3) The installation, operation, and maintenance instructions for the device; and

(4) The name and address of the applicant and the manufacturing facility.

(c) The manufacturer must furnish the recognized facility one device of each model for which certification is requested and samples of each material from which the device is constructed, that must be tested destructively under § 159.117. The device furnished is for the testing required by this part except that, for devices that are not suited for unit testing, the manufacturer may submit the design so that the recognized facility may determine the components of the device and materials to be submitted for testing and the tests to be performed at a place other than the facility. The Coast Guard must review and accept all such determinations before testing is begun.

(d) At the time of submittal of an application to a recognized facility the manufacturer must notify the Coast Guard of the type and model of the device, the name of the recognized facility to which application is being made, and the name and address of the manufacturer, and submit a signed statement of the times when the manufacturer will permit designated officers and employees of the Coast Guard to have access to the manufacturer's facilities and all records required by this part.

[CGD 73–83, 40 FR 4624, Jan. 30, 1975, as amended by CGD 75–213, 41 FR 15325, Apr. 12, 1976]

§ 159.15 Certification.

(a) The recognized facility must evaluate the information that is submitted by the manufacturer in accordance with § 159.14(b) (1), (2), and (3), evaluate the device for compliance with §§ 159.53 through 159.95, test the device in accordance with § 159.101 and submit to the Commanding Officer, USCG Marine Safety Center, 2100 2nd St. SW., Stop 7102, Washington, DC 20593–7102 the following:

(1) The information that is required under § 159.14(b);

(2) A report on compliance evaluation;

(3) A description of each test;

(4) Test results; and

(5) A statement, that is signed by the person in charge of testing, that the test results are accurate and complete.

(b) The Coast Guard certifies a test device, on the design of the device, if it determines, after consideration of the information that is required under paragraph (a) of this section, that the device meets the requirements in Subpart C of this part.

(c) The Coast Guard notifies the manufacturer and recognized facility of its determination under paragraph (b) of this section. If the device is certified, the Coast Guard includes a certification number for the device. If certification is denied, the Coast Guard notifies the manufacturer and recognized facility of the requirements of this part that are not met. The manufacturer may appeal a denial to the Commanding Officer, USCG Marine Safety Center, 2100 2nd St. SW., Stop 7102, Washington, DC 20593–7102.

(d) If upon re-examination of the test device, the Coast Guard determines that the device does not in fact comply with the requirements of Subpart C of this part, it may terminate the certification.

[CGD 73–83, 40 FR 4624, Jan. 30, 1975, as amended by CGD 75–213, 41 FR 15326, Apr. 12, 1976; CGD 82–063a, 48 FR 4776, Feb. 3, 1983; CGD 88–052, 53 FR 25122, July 1, 1988; CGD 96–026, 61 FR 33668, June 28, 1996; USCG–2001–9286, 66 FR 33641, June 25, 2001; USCG–2010–0351, 75 FR 36286, June 25, 2010]

§ 159.16 Authorization to label devices.

(a) When a test device is certified under § 159.15(b), the Coast Guard will issue a letter that authorizes the manufacturer to label each device that he manufactures with the manufacturer's certification that the device is in all

material respects substantially the same as a test device certified by the U.S. Coast Guard pursuant to section 312 of the Federal Water Pollution Control Act Amendments of 1972.

(b) Certification placed on a device by its manufacturer under this section is the certification required by section 312(h)(4) of the Federal Water Pollution Control Act Amendments of 1972, which makes it unlawful for a vessel that is subject to the standards and regulations promulgated under the Act to operate on the navigable waters of the United States, if such vessel is not equipped with an operable marine sanitation device certified pursuant to section 312 of the Act.

(c) Letters of authorization issued under this section are valid for 5 years, unless sooner suspended, withdrawn, or terminated and may be reissued upon written request of the manufacturer to whom the letter was issued.

(d) The Coast Guard, in accordance with the procedure in 46 CFR 2.75, may suspend, withdraw, or terminate any letter of authorization issued under this section if the Coast Guard finds that the manufacturer is engaged in the manufacture of devices labeled under this part that are not in all material respects substantially the same as a test device certified pursuant to this part.

§ 159.17 Changes to certified devices.

(a) The manufacturer of a device that is certified under this part shall notify the Commanding Officer, USCG Marine Safety Center, 2100 2nd St. SW., Stop 7102, Washington, DC 20593–7102 in writing of any change in the design of the device.

(b) A manufacturer shall include with a notice under paragraph (a) of this section a description of the change, its advantages, and the recommendation of the recognized facility as to whether the device remains in all material respects substantially the same as the original test device.

(c) After notice under paragraph (a) of this section, the Coast Guard notifies the manufacturer and the recognized facility in writing of any tests that must be made for certification of the device or for any change in the letter of authorization. The manufacturer may appeal this determination to the Commandant (CG–52), 2100 2nd St. SW., Stop 7126, Washington, DC 20593–7126.

[CGD 73–83, 40 FR 4624, Jan. 30, 1975, as amended by CGD 82–063a, 48 FR 4776, Feb. 3, 1983; CGD 88–052, 53 FR 25122, July 1, 1988; CGD 96–026, 61 FR 33668, June 28, 1996; USCG–2001–9286, 66 FR 33641, June 25, 2001; USCG–2010–0351, 75 FR 36286, June 25, 2010]

§ 159.19 Testing equivalency.

(a) If a test required by this part may not be practicable or necessary, a manufacturer may apply to the Commanding Officer, USCG Marine Safety Center, 2100 2nd St. SW., Stop 7102, Washington, DC 20593–7102 for deletion or approval of an alternative test as equivalent to the test requirements in this part. The application must include the manufacturer's justification for deletion or the alternative test and any alternative test data.

(b) The Coast Guard notifies the manufacturer of its determination under paragraph (a) of this section and that determination is final.

[CGD 73–83, 40 FR 4624, Jan. 30, 1975, as amended by CGD 82–063a, 48 FR 4776, Feb. 3, 1983; CGD 88–052, 53 FR 25122, July 1, 1988; CGD 96–026, 61 FR 33668, June 28, 1996; USCG–2001–9286, 66 FR 33641, June 25, 2001; USCG–2010–0351, 75 FR 36286, June 25, 2010]

Subpart C—Design, Construction, and Testing

§ 159.51 Purpose and scope.

(a) This subpart prescribes regulations governing the design and construction of marine sanitation devices.

(b) Unless otherwise authorized by the Coast Guard each device for which certification under this part is requested must meet the requirements of this subpart.

§ 159.53 General requirements.

A device must:

(a) Under the test conditions described in §§ 159.123 and 159.125, produce an effluent having a fecal coliform bacteria count not greater than 1,000 per 100 milliliters and no visible floating solids (Type I),

(b) Under the test conditions described in §§ 159.126 and 159.126a, produce an effluent having a fecal coliform bacteria count not greater than

200 per 100 milliliters and suspended solids not greater than 150 milligrams per liter (Type II), or

(c) Be designed to prevent the overboard discharge of treated or untreated sewage or any waste derived from sewage (Type III).

[CGD 73–83, 40 FR 4624, Jan. 30, 1975, as amended by CGD 75–213, 41 FR 15325, Apr. 12, 1976]

§ 159.55 Identification.

(a) Each production device must be legibly marked in accordance with paragraph (b) of this section with the following information:

(1) The name of the manufacturer.

(2) The name and model number of the device.

(3) The month and year of completion of manufacture.

(4) Serial number.

(5) Whether the device is certified for use on an inspected or an uninspected vessel.

(6) Whether the device is Type I, II, or III.

(b) The information required by paragraph (a) of this section must appear on a nameplate attached to the device or in lettering on the device. The nameplate or lettering stamped on the device must be capable of withstanding without loss of legibility the combined effects of normal wear and tear and exposure to water, salt spray, direct sunlight, heat, cold, and any substance listed in § 159.117(b) and (c). The nameplate and lettering must be designed to resist efforts to remove them from the device or efforts to alter the information stamped on the nameplate or the device without leaving some obvious evidence of the attempted removal or alteration.

[CGD 73–83, 40 FR 4624, Jan. 30, 1975, as amended by CGD 75–213, 41 FR 15325, Apr. 12, 1976]

§ 159.57 Installation, operation, and maintenance instructions.

(a) The instructions supplied by the manufacturer must contain directions for each of the following:

(1) Installation of the device in a manner that will permit ready access to all parts of the device requiring routine service and that will provide any flue clearance necessary for fire safety.

(2) Safe operation and servicing of the device so that any discharge meets the applicable requirements of § 159.53.

(3) Cleaning, winter layup, and ash or sludge removal.

(4) Installation of a vent or flue pipe.

(5) The type and quantity of chemicals that are required to operate the device, including instructions on the proper handling, storage and use of these chemicals.

(6) Recommended methods of making required plumbing and electrical connections including fuel connections and supply circuit overcurrent protection.

(b) The instructions supplied by the manufacturer must include the following information:

(1) The name of the manufacturer.

(2) The name and model number of the device.

(3) Whether the device is certified for use on an inspected, or uninspected vessel.

(4) A complete parts list.

(5) A schematic diagram showing the relative location of each part.

(6) A wiring diagram.

(7) A description of the service that may be performed by the user without coming into contact with sewage or chemicals.

(8) Average and peak capacity of the device for the flow rate, volume, or number of persons that the device is capable of serving and the period of time the device is rated to operate at peak capacity.

(9) The power requirements, including voltage and current.

(10) The type and quantity of fuel required.

(11) The duration of the operating cycle for unitized incinerating devices.

(12) The maximum angles of pitch and roll at which the device operates in accordance with the applicable requirements of § 159.53.

(13) Whether the device is designed to operate in salt, fresh, or brackish water.

(14) The maximum hydrostatic pressure at which a pressurized sewage retention tank meets the requirements of § 159.111.

(15) The maximum operating level of liquid retention components.

(16) Whether the device is Type I, II, or III.

(17) A statement as follows:

NOTE: The EPA standards state that in freshwater lakes, freshwater reservoirs or other freshwater impoundments whose inlets or outlets are such as to prevent the ingress or egress by vessel traffic subject to this regulation, or in rivers not capable of navigation by interstate vessel traffic subject to this regulation, marine sanitation devices certified by the U.S. Coast Guard installed on all vessels shall be designed and operated to prevent the overboard discharge of sewage, treated or untreated, or of any waste derived from sewage. The EPA standards further state that this shall not be construed to prohibit the carriage of Coast Guard-certified flow-through treatment devices which have been secured so as to prevent such discharges. They also state that waters where a Coast Guard-certified marine sanitation device permitting discharge is allowed include coastal waters and estuaries, the Great Lakes and interconnected waterways, freshwater lakes and impoundments accessible through locks, and other flowing waters that are navigable interstate by vessels subject to this regulation (40 CFR 140.3).

[CGD 73–83, 40 FR 4624, Jan. 30, 1975, as amended by CGD 75–213, 41 FR 15325, Apr. 12, 1976]

§ 159.59 Placard.

Each device must have a placard suitable for posting on which is printed the operating instructions, safety precautions, and warnings pertinent to the device. The size of the letters printed on the placard must be one-eighth of an inch or larger.

§ 159.61 Vents.

Vents must be designed and constructed to minimize clogging by either the contents of the tank or climatic conditions such as snow or ice.

§ 159.63 Access to parts.

Each part of the device that is required by the manufacturer's instructions to be serviced routinely must be readily accessible in the installed position of the device recommended by the manufacturer.

§ 159.65 Chemical level indicator.

The device must be equipped with one of the following:

(a) A means of indicating the amount in the device of any chemical that is necessary for its effective operation.

(b) A means of indicating when chemicals must be added for the proper continued operation of the device.

§ 159.67 Electrical component ratings.

Electrical components must have current and voltage ratings equal to or greater than the maximum load they may carry.

§ 159.69 Motor ratings.

Motors must be rated to operate at 50 °C ambient temperature.

§ 159.71 Electrical controls and conductors.

Electrical controls and conductors must be installed in accordance with good marine practice. Wire must be copper and must be stranded. Electrical controls and conductors must be protected from exposure to chemicals and sewage.

§ 159.73 Conductors.

Current carrying conductors must be electrically insulated from non-current carrying metal parts.

§ 159.75 Overcurrent protection.

Overcurrent protection must be provided within the unit to protect subcomponents of the device if the manufacturer's recommended supply circuit overcurrent protection is not adequate for these subcomponents.

§ 159.79 Terminals.

Terminals must be solderless lugs with ring type or captive spade ends, must have provisions for being locked against movement from vibration, and must be marked for identification on the wiring diagram required in § 159.57. Terminal blocks must be nonabsorbent and securely mounted. Terminal blocks must be provided with barrier insulation that prevents contact between adjacent terminals or metal surfaces.

§ 159.81 Baffles.

Baffles in sewage retention tanks, if any, must have openings to allow liquid and vapor to flow freely across the top and bottom of the tank.

§ 159.83 Level indicator.

Each sewage retention device must have a means of indicating when the device is more than ¾ full by volume.

§ 159.85 Sewage removal.

The device must be designed for efficient removal of nearly all of the liquid and solids in the sewage retention tank.

§ 159.87 Removal fittings.

If sewage removal fittings or adapters are provided with the device, they must be of either 1½″ or 4″ nominal pipe size.

§ 159.89 Power interruption: Type I and II devices.

A discharge device must be designed so that a momentary loss of power during operation of the device does not allow a discharge that does not meet the requirements in § 159.53.

[CGD 73–83, 40 FR 4624, Jan. 30, 1975, as amended by CGD 75–213, 41 FR 15326, Apr. 12, 1976]

§ 159.93 Independent supporting.

The device must have provisions for supporting that are independent from connecting pipes.

§ 159.95 Safety.

(a) Each device must—

(1) Be free of design defects such as rough or sharp edges that may cause bodily injuries or that would allow toxic substances to escape to the interior of the vessel;

(2) Be vented or provided with a means to prevent an explosion or over pressurization as a result of an accumulation of gases; and

(3) Meet all other safety requirements of the regulations applicable to the type of vessel for which it is certified.

(b) A chemical that is specified or provided by the manufacturer for use in the operation of a device and is defined as a hazardous material in 46 CFR Part 146 must be certified by the procedures in 46 CFR Part 147.

(c) Current carrying components must be protected from accidental contact by personnel operating or routinely servicing the device. All current carrying components must as a minimum be of drip-proof construction or be enclosed within a drip-proof compartment.

§ 159.97 Safety: inspected vessels.

The Commanding Officer, USCG Marine Safety Center, approves the design and construction of devices to be certified for installation and operation on board inspected vessels on the basis of tests and reports of inspection under the applicable marine engineering requirements in subchapter F of Title 46, Code of Federal Regulations, and under the applicable electrical engineering requirements in subchapter J of Title 46 Code of Federal Regulations.

[CGD 73–83, 40 FR 4624, Jan. 30, 1975, as amended by CGD 75–213, 41 FR 15326, Apr. 12, 1976; USCG–2001–9286, 66 FR 33641, June 25, 2001]

§ 159.101 Testing: general.

Unless otherwise authorized by the Coast Guard, a recognized facility must perform each test described in §§ 159.103 through 159.131. The same device must be used for each test and tested in the order in which the tests are described. There must be no cracking, softening, deterioration, displacement, breakage, leakage or damage of components or materials that affects the operation or safety of the device after each test described in §§ 159.103 through 159.117 and § 159.121, and the device must remain operable after the test described in § 159.119. The device must be set up in a manner simulating installation on a vessel in accordance with the manufacturer's instructions with respect to mounting, water supply, and discharge fittings.

[CGD 73–83, 40 FR 4624, Jan. 30, 1975, as amended by CGD 75–213, 41 FR 15326, Apr. 12, 1976]

§ 159.103 Vibration test.

The device, with liquid retention components, if any, filled with water to one-half of their volume, must be subjected to a sinusoidal vibration for a period of 12 hours, 4 hours in each of the x, y, and z planes, at the resonant frequency of the device (or at 55 cycles per second if there is no resonant frequency between 10 to 60 hertz) and with

a peak amplitude of 0.019 to 0.021 inches.

§ 159.105 Shock test.

The device, with liquid retention components, if any, filled with water to half of their volume, must be subjected to 1,000 vertical shocks that are ten times the force of gravity (10g) and have a duration of 20–25 milliseconds measured at the base of the half-sine shock envelope.

§ 159.107 Rolling test.

(a) The device, with liquid retention components, if any, filled with water to half of their volume, must be subjected to 100 cycles with the axis of rotation 4 feet from the centerline of the device, no more than 6 inches below the plane of the bottom of the device, and parallel to any tank baffles. The device must then be rotated 90 degrees on its vertical axis and subjected to another 100 cycles. This testing must be repeated with the liquid retention components filled to the maximum operating level as specified by the manufacturer in § 159.57.

(b) Eighty percent of the rolling action must be approximately 15 degrees on either side of the vertical and at a cyclic rate of 3 to 4 seconds. Twenty percent motions must be approximately 30 degrees, or the maximum angle specified by the manufacturer under § 159.57, whichever is greater, on either side of the vertical at a cyclic rate of 6 to 8 seconds.

§ 159.109 Pressure test.

Any sewage retention tank that is designed to operate under pressure must be pressurized hydrostatically at a pressure head of 7 feet or to 150 percent of the maximum pressure specified by the manufacturer for operation of the tank, whichever is greater. The tank must hold the water at this pressure for 1 hour with no evidence of leaking.

§ 159.111 Pressure and vacuum pulse test.

Liquid retention components of the device with manufacturer specified venting installed must be subjected to 50 fillings of water at a pressure head of 7 feet or the maximum pressure specified by the manufacturer for operation of the device, whichever is greater, and then emptied with a 45 gallon per minute or larger positive displacement pump that remains in operation 30 seconds after emptying the tank at the end of each cycle.

§ 159.115 Temperature range test.

(a) The device must be held at a temperature of 60 °C or higher for a period of 16 hours.

(b) The device must be held at a temperature of −40 °C or less for a period of 16 hours following winterization in accordance with manufacturers' instructions.

§ 159.117 Chemical resistance test.

(a) In each case where the recognized facility doubts the ability of a material to withstand exposure to the substances listed in paragraphs (b) and (c) of this section a sample of the material must be tested.

(b) A sample referred to in paragraph (a) of this section must be partially submerged in each of the following substances for 100 hours at an ambient temperature of 22 °C.

(1) Sewage.

(2) Any disinfectant that is required in the operation of the device.

(3) Any chemical compound in solid, liquid or gaseous form, used, emitted or produced in the operation of the device.

(4) Fresh or salt (3.5 percent Sodium Chloride) flush water.

(5) Toilet bowl cleaners.

(6) Engine Oil (SAE/30).

(7) Ethylene Glycol.

(8) Detergents (household and bilge cleaning type).

(c) A sample of the material must be doused 20 times, with a 1 hour drying period between dousings, in each of the following substances:

(1) Gasoline.

(2) Diesel fuel.

(3) Mineral spirits.

(4) Turpentine.

(5) Methyl alcohol.

§ 159.119 Operability test; temperature range.

The device must operate in an ambient temperature of 5 °C with inlet operating fluid temperature varying from 2

°C to 32 °C and in an ambient temperature of 50 °C with inlet operating fluid temperature varying from 2 °C to 32 °C.

§ 159.121 Sewage processing test.

(a) The device must process human sewage in the manner for which it is designed when tested in accordance with this section. There must be no sewage or sewage-treating chemicals remaining on surfaces or in crevices that could come in contact with a person using the device or servicing the device in accordance with the instructions supplied under § 159.57(b)(7).

(b) During the test the device must be operated and maintained in accordance with the manufacturer's instructions. Any initial start-up time specified by the manufacturer must be allowed before test periods begin. For 1 hour of each 8-hour test period, the device must be tilted to the maximum angles specified by the manufacturer under §§ 159.55 and 159.57.

(c) Except for devices described in paragraph (d) of this section, the devices must process and discharge or store human sewage over at least an 8-consecutive hour period on at least 10 days within a 20-day period. The device must receive human sewage consisting of fecal matter, urine, and toilet paper in a ratio of four urinations to one defecation with at least one defecation per person per day. Devices must be tested at their average rate of capacity as specified in § 159.57. In addition, during three periods of each day the system must process sewage at the peak capacity for the period of time it is rated at peak capacity.

(d) A device that processes and discharges continuously between individual use periods or a large device, as determined by the Coast Guard, must process and discharge sewage over at least 10-consecutive days at the average daily capacity specified by the manufacturer. During three periods of each day the system must process sewage at the peak capacity for the period of time it is rated at peak capacity. The sewage for this test must be fresh, domestic sewage to which primary sludge has been added, as necessary, to create a test sewage with a minimum of 500 milligrams of suspended solids per liter.

[CGD 73–83, 40 FR 4624, Jan. 30, 1975, as amended by USCG–2002–12471, 67 FR 41333, June 18, 2002]

§ 159.123 Coliform test: Type I devices.

(a) The arithmetic mean of the fecal coliform bacteria in 38 of 40 samples of effluent discharged from a Type I device during the test described in § 159.121 must be less than 1000 per 100 milliliters when tested in accordance with 40 CFR Part 136.

(b) The 40 samples must be taken from the device as follows: During each of the 10-test days, one sample must be taken at the beginning, middle, and end of an 8-consecutive hour period with one additional sample taken immediately following the peak capacity processing period.

[CGD 73–83, 40 FR 4624, Jan. 30, 1975, as amended by CGD 75–213, 41 FR 15326, Apr. 12, 1976]

§ 159.125 Visible floating solids: Type I devices.

During the sewage processing test (§ 159.121) 40 effluent samples of approximately 1 liter each shall be taken from a Type I device at the same time as samples taken in § 159.123 and passed expeditiously through a U.S. Sieve No. 12 as specified in ASTM E 11 (incorporated by reference, see § 159.4). The weight of the material retained on the screen after it has been dried to a constant weight in an oven at 103 °C. must be divided by the volume of the sample and expressed as milligrams per liter. This value must be 10 percent or less of the total suspended solids as determined in accordance with 40 CFR Part 136 or at least 38 of the 40 samples.

NOTE: 33 U.S.C. 1321(b)(3) prohibits discharge of harmful quantities of oil into or upon the navigable waters of the United States or adjoining shorelines or into or upon the waters of the contiguous zone. Under 40 CFR 110.3 and 110.4 such discharges of oil include discharges which:

(a) Violate applicable water quality standards, or

(b) Cause a film or sheen upon or discoloration of the surface of the water or adjoining shorelines or cause a sludge or emulsion to be deposited beneath the surface of the water or upon adjoining shorelines. If a sample contains a quantity of oil determined to be

harmful, the Coast Guard will not certify the device.

[CGD 73–83, 40 FR 4624, Jan. 30, 1975, as amended by CGD 75–213, 41 FR 15326, Apr. 12, 1976; USCG–1999–5151, 64 FR 67176, Dec. 1, 1999]

§ 159.126 Coliform test: Type II devices.

(a) The arithmetic mean of the fecal coliform bacteria in 38 of 40 samples of effluent from a Type II device during the test described in § 159.121 must be 200 per 100 milliliters or less when tested in accordance with 40 CFR Part 136.

(b) The 40 samples must be taken from the device as follows: During each of the 10 test days, one sample must be taken at the beginning, middle and end of an 8-consecutive hour period with one additional sample taken immediately following the peak capacity processing period.

[CGD 75–213, 41 FR 15326, Apr. 12, 1976]

§ 159.126a Suspended solids test: Type II devices.

During the sewage processing test (§ 159.121) 40 effluent samples must be taken at the same time as samples are taken for § 159.126 and they must be analyzed for total suspended solids in accordance with 40 CFR Part 136. The arithmetic mean of the total suspended solids in 38 of 40 of these samples must be less than or equal to 150 milligrams per liter.

[CGD 75–213, 41 FR 15326, Apr. 12, 1976]

§ 159.127 Safety coliform count: Recirculating devices.

Thirty-eight of forty samples of flush fluid from a recirculating device must have less than 240 fecal coliform bacteria per 100 milliliters. These samples must be collected in accordance with § 159.123(b) and tested in accordance with 40 CFR Part 136.

[CGD 73–83, 40 FR 4624, Jan. 30, 1975, as amended by CGD 75–213, 41 FR 15326, Apr. 12, 1976]

§ 159.129 Safety: Ignition prevention test.

(a) Components of a device that are a potential ignition source in an explosive atmosphere must pass the test in paragraph (b) or (c) of this section or meet the requirements of paragraph (d) or have a specific warning in the instruction manual required by § 159.57 that the device should not be installed in an explosive atmosphere.

(b) Components protected by vapor exclusion must be placed in a chamber filled with a rich mixture of gasoline or propane in air with the pressure being varied from 0 to 2 psig once an hour for 8 hours. Vapor readings must be taken in the void being protected and must indicate a leakage less than 20 percent of the lower explosive limit of the mixture in the chamber.

(c) Components providing ignition protection by means other than vapor exclusion must be fitted with an ignition source, such as a spark plug, and a means of injecting an explosive mixture of gasoline or propane and air into the void that protects the component. Connections must be made so as to minimize any additional volume added to the protected void by the apparatus delivering the explosive mixture. The component must be placed in a chamber filled with an explosive mixture and there must be no ignition of the explosive mixture surrounding the component when the following tests are conducted:

(1) Using any overload protection that is part of the device, the potential ignition source must be operated for one half hour at 110 percent of its rated voltage, one half hour at 50 percent of its rated voltage and one half hour at 100 percent of its rated voltage with the motor or armature locked, if the potential ignition source is a motor or part of a motor's electrical circuit.

(2) With the explosive mixture in the protected void, the test installed ignition source must be activated 50 times.

(3) The tests paragraphs (c) (1) and (2) of this section must be repeated with any plugs removed.

(d) Components that are certified as being intrinsically safe in accordance with the Instrument Society of America (RP 12.2) or explosion proof in accordance with the Underwriters Laboratories STD 698 in Class I, Group D hazardous locations (46 CFR 111.80–5(a)) need not be subjected to this testing.

§ 159.131 Safety: Incinerating device.

An incinerating device must not incinerate unless the combustion chamber is closed, must purge the combustion chamber of combustible fuel vapors before and after incineration must secure automatically if the burner does not ignite, must not allow an accumulation of fuel, and must neither produce a temperature on surfaces adjacent to the incineration chamber higher than 67 °C nor produce a temperature on surfaces in normal body contact higher than 41 °C when operating in an ambient temperature of 25 °C. Unitized incineration devices must completely burn to a dry, inert ash, a simultaneous defecation and urination and must not discharge fly ash, malodors, or toxic substances.

Subpart D—Recognition of Facilities

§ 159.201 Recognition of facilities.

A recognized facility is an independent laboratory accepted by the Coast Guard under 46 CFR 159.010 to perform the tests and inspections required under this part. A list of accepted laboratories is available from the Commandant (CG–5213).

[CGD 95–028, 62 FR 51194, Sept. 30, 1997, as amended by USCG–1999–5832, 64 FR 34715, June 29, 1999; USCG–2008–0179, 73 FR 35016, June 19, 2008]

Subpart E—Discharge of Effluents in Certain Alaskan Waters by Cruise Vessel Operations

SOURCE: 66 FR 38930, July 26, 2001, unless otherwise noted.

§ 159.301 Purpose.

The purpose of this subpart is to implement ''Title XIV—Certain Alaskan Cruise Ship Operations'' contained in section 1(a)(4) of Pub. L. 106–554, enacted on December 21, 2000, by prescribing regulations governing the discharges of sewage and graywater from cruise vessels, require sampling and testing of sewage and graywater discharges, and establish reporting and record keeping requirements.

§ 159.303 Applicability.

This subpart applies to each cruise vessel authorized to carry 500 or more passengers operating in the waters of the Alexander Archipelago and the navigable waters of the United States within the State of Alaska and within the Kachemak Bay National Estuarine Research Reserve.

§ 159.305 Definitions.

In this subpart:

Administrator—means the Administrator of the United States Environmental Protection Agency.

Applicable Waters of Alaska—means the waters of the Alexander Archipelago and the navigable waters of the United States within the State of Alaska and within the Kachemak Bay National Estuarine Research Reserve.

Captain of the Port—means the Captain of the Port as defined in Subpart 3.85 of this chapter.

Conventional Pollutants—means the list of pollutants listed in 40 CFR 401.16.

Cruise Vessel—means a passenger vessel as defined in section 2101(22) of Title 46, United States Code. The term does not include a vessel of the United States operated by the federal government or a vessel owned and operated by the government of a State.

Discharge—means a release, however caused, from a cruise vessel, and includes, any escape, disposal, spilling, leaking, pumping, emitting or emptying.

Environmental Compliance Records—includes the Sewage and Graywater Discharge Record Book, all discharge reports, all discharge sampling test results, as well as any other records that must be kept under this subpart.

Graywater—means only galley, dishwasher, bath, and laundry waste water. The term does not include other wastes or waste streams.

Navigable Waters—has the same meaning as in section 502 of the Federal Water Pollution Control Act, as amended.

Person—means an individual, corporation, partnership, limited liability company, association, state, municipality, commission or political subdivision of a state, or any federally recognized Indian tribal government.

Priority Pollutant—means the list of toxic pollutants listed in 40 CFR 401.15.

Sewage—means human body wastes and the wastes from toilets and other receptacles intended to receive or retain body waste.

Treated Sewage—means sewage meeting all applicable effluent limitation standards and processing requirements of the Federal Water Pollution Control Act, as amended and of Title XIV of Public Law 106–554 ''Certain Alaskan Cruise Ship Operations'', and regulations promulgated under either.

Untreated Sewage—means sewage that is not treated sewage.

Waters Of The Alexander Archipelago—means all waters under the sovereignty of the United States within or near Southeast Alaska as follows:

(1) Beginning at a point 58°11–44 N, 136°39–25 W [near Cape Spencer Light], thence southeasterly along a line three nautical miles seaward of the baseline from which the breadth of the territorial sea is measured in the Pacific Ocean and the Dixon Entrance, except where this line intersects geodesics connecting the following five pairs of points:

58°05–17 N, 136°33–49 W and 58°11–41 N, 136°39–25 W [Cross Sound]
56°09–40 N, 134°40–00 W and 55°49–15 N, 134°17–40 W [Chatham Strait]
55°49–15 N, 134°17–40 W and 55°50–30 N, 133°54–15 W [Sumner Strait]
54°41–30 N, 132°01–00 W and 54°51–30 N, 131°20–45 W [Clarence Strait]
54°51–30 N, 131°20–45 W and 54°46–15 N, 130°52–00 W [Revillagigedo Channel]

(2) The portion of each such geodesic in paragraph (1) of this definition situated beyond 3 nautical miles from the baseline from which the breadth of the territorial seas is measured from the outer limit of the waters of the Alexander Archipelago in those five locations.

§ 159.307 Untreated sewage.

No person shall discharge any untreated sewage from a cruise vessel into the applicable waters of Alaska.

§ 159.309 Limitations on discharge of treated sewage or graywater.

(a) No person shall discharge treated sewage or graywater from a cruise vessel into the applicable waters of Alaska unless:

(1) The cruise vessel is underway and proceeding at a speed of not less than six knots;

(2) The cruise vessel is not less than one nautical mile from the nearest shore, except in areas designated by the Coast Guard in consultation with the State of Alaska;

(3) The discharge complies with all applicable cruise vessel effluent standards established pursuant to Pub. L. 106–554 and any other applicable law, and

(4) The cruise vessel is not in an area where the discharge of treated sewage or graywater is prohibited.

(b) Until such time as the Administrator promulgates regulations addressing effluent quality standards for cruise vessels operating in the applicable waters of Alaska, treated sewage and graywater may be discharged from vessels in circumstances otherwise prohibited under paragraph (a)(1) and (2) of this section provided that:

(1) Notification to the Captain of the Port (COTP) is made not less than 30 days prior to the planned discharge, and such notice includes results of tests showing compliance with this section;

(2) The discharge satisfies the minimum level of effluent quality specified in 40 CFR 133.102;

(3) The geometric mean of the samples from the discharge during any 30-day period does not exceed 20 fecal coliform/100 milliliters (ml) and not more than 10 percent of the samples exceed 40 fecal coliform/100 ml;

(4) Concentrations of total residual chlorine do not exceed 10.0 micrograms per liter (μgm/l);

(5) Prior to any such discharge occurring, the owner, operator or master, or other person in charge of a cruise vessel, can demonstrate to the COTP that test results from at least five samples taken from the vessel representative of the effluent to be discharged, on different days over a 30-day period, conducted in accordance with the guidelines promulgated by the Administrator in 40 CFR part 136, which confirm that the water quality of the effluents proposed for discharge is in

compliance with paragraphs (b)(2), (3) and (4) of this section; and

(6) To the extent not otherwise being done by the owner, operator, master or other person in charge of a cruise vessel, pursuant to § 159.317 of this subpart, the owner, operator, master or other person in charge of a cruise vessel shall demonstrate continued compliance through sampling and testing for conventional pollutants and residual chlorine of all treated sewage and graywater effluents periodically as determined by the COTP.

[66 FR 38930, July 26, 2001, as amended at USCG–2005–21531, 70 FR 36350, June 23, 2005]

§ 159.311 Safety exception.

The regulations in this subpart shall not apply to discharges made for the purpose of securing the safety of the cruise vessel or saving life at sea, provided that all reasonable precautions have been taken for the purpose of preventing or minimizing the discharge.

§ 159.313 Inspection for compliance and enforcement.

(a) Cruise vessels operating within the applicable waters of Alaska are subject to inspection by the Coast Guard to ensure compliance with this subpart.

(b) An inspection under this section shall include an examination of the Sewage and Graywater Discharge Record Book required under § 159.315 of this subpart, environmental compliance records, and a general examination of the vessel. A copy of any entry in the Sewage and Graywater Discharge Record Book may be made and the Master of the vessel may be required to certify that the copy is a true copy of the original entry.

(c) A vessel not in compliance with this subpart may be subject to the penalties set out in § 159.321, denied entry into the applicable waters of Alaska, detained, or restricted in its operations by order of the COTP.

§ 159.315 Sewage and graywater discharge record book.

(a) While operating in the applicable waters of Alaska each cruise vessel shall maintain, in English, a legible Sewage and Graywater Discharge Record Book with the vessel's name and official number listed on the front cover and at the top of each page.

(b) Entries shall be made in the Sewage and Graywater Discharge Record Book whenever any of the following is released into the applicable waters of Alaska:

(1) Treated or untreated sewage;

(2) Graywater; or

(3) Sewage and graywater mixture.

(c) Each entry in the Sewage and Graywater Discharge Record Book shall, at a minimum, contain the following information:

(1) Name and location of each discharge port within the ship;

(2) Date the start of discharge occurred;

(3) Whether the effluent is treated or untreated sewage, graywater, or a sewage and graywater mixture and type of treatment used;

(4) Time discharge port is opened;

(5) Vessel's latitude and longitude at the time the discharge port is opened;

(6) Volume discharged in cubic meters;

(7) Flow rate of discharge in liters per minute;

(8) Time discharge port is secured;

(9) Vessel's latitude and longitude at the time the discharge port is secured; and

(10) Vessel's minimum speed during discharge.

(d) In the event of an emergency, accidental or other exceptional discharge of sewage or graywater, a statement shall be made in the Sewage and Graywater Discharge Record Book of the circumstances and reasons for the discharge and an immediate notification of the discharge shall be made to the COTP.

(e) Each entry of a discharge shall be recorded without delay and signed and dated by the person or persons in charge of the discharge concerned and each completed page shall be signed and dated by the master or other person having charge of the ship.

(f) The Sewage and Graywater Discharge Record Book shall be kept in such a place as to be readily available for inspection at all reasonable times and shall be kept on board the ship.

(g) The master or other person having charge of a ship required to keep a Sewage and Graywater Discharge

Record Book shall be responsible for the maintenance of such record.

(h) The Sewage and Graywater Discharge Record Book shall be maintained on board for not less than three years.

§ 159.317 Sampling and reporting.

(a) The owner, operator, master or other person in charge of a cruise vessel that discharges treated sewage and/or graywater in the applicable waters of Alaska shall;

(1) Not less than 90 days prior to each vessel's initial entry into the applicable waters of Alaska during any calendar year, provide to the COTP certification of participation under a Quality Assurance/Quality Control Plan (QA/QCP) accepted by the COTP for sampling and analysis of treated sewage and/or graywater for the current operating season;

(2) Not less than 30 days nor more than 120 days prior to each vessel's initial entry into the applicable waters of Alaska during any calendar year, provide a certification to the COTP that the vessel's treated sewage and graywater effluents meet the minimum standards established by the Administrator, or in the absence of such standards, meet the minimum established in § 159.319 of this subpart;

(3) Within 30 days of each vessel's initial entry into the applicable waters of Alaska during any calendar year, provide to the COTP a Vessel Specific Sampling Plan (VSSP) for review and acceptance, and undergo sampling and testing for conventional pollutants of all treated sewage and graywater effluents as directed by the COTP;

(4) While operating in the applicable waters of Alaska be subject to unannounced sampling of treated sewage and graywater discharge effluents, or combined treated sewage/graywater discharge effluents for the purpose of testing for a limited suite, as determined by the Coast Guard, of priority pollutants;

(5) While operating in the applicable waters of Alaska be subject to additional random sampling events, in addition to all other required sampling, of some or all treated sewage and graywater discharge effluents for conventional and/or priority pollutant testing as directed by the COTP;

(6) Ensure all samples, as required by this section, are collected and tested by a laboratory accepted by the Coast Guard for the testing of conventional and priority pollutants, as defined by this subpart, and in accordance with the cruise vessel's Coast Guard accepted QA/QCP and VSSP;

(7) Pay all costs associated with development of an acceptable QA/QCP and VSSP, sampling and testing of effluents, reporting of results, and any additional environmental record keeping as required by this subpart, not to include cost of federal regulatory oversight.

(b) A QA/QCP must, at a minimum include:

(1) Sampling techniques and equipment, sampling preservation methods and holding times, and transportation protocols, including chain of custody;

(2) Laboratory analytical information including methods used, calibration, detection limits, and the laboratory's internal QA/QC procedures;

(3) Quality assurance audits used to determine the effectiveness of the QA program; and

(4) Procedures and deliverables for data validation used to assess data precision and accuracy, the representative nature of the samples drawn, comparability, and completeness of measure parameters.

(c) A VSSP is a working document used during the sampling events required under this section and must, at a minimum, include:

(1) Vessel name;

(2) Passenger and crew capacity of the vessel;

(3) Daily water use of the vessel;

(4) Holding tank capacities for treated sewage and graywater;

(5) Vessel schematic of discharge ports and corresponding sampling ports;

(6) Description of discharges; and

(7) A table documenting the type of discharge, type of sample drawn (grab or composite), parameters to test for (conventional or priority pollutants), vessel location when sample drawn, date and time of the sampling event.

(d) Test results for conventional pollutants shall be submitted within 15

calendar days of the date the sample was collected, and for priority pollutants within 30 calendar days of the date the sample was collected, to the COTP directly by the laboratory conducting the testing and in accordance with the Coast Guard accepted QA/QCP.

(e) Samples collected for analysis under this subpart shall be held by the laboratory contracted to do the analysis for not less than six months, or as directed by the COTP.

(f) Reports required under this section may be written or electronic. If electronic, the reports must be in a format readable by Coast Guard and Alaska Department of Environmental Conservation data systems.

§ 159.319 Fecal coliform and total suspended solids standards.

(a) *Treated sewage effluent discharges.* Until such time as the Administrator promulgates effluent discharge standards for treated sewage, treated sewage effluent discharges in the applicable waters of Alaska shall not have a fecal coliform bacterial count of greater than 200 per 100 ml nor total suspended solids greater than 150 mg/l.

(b) *Graywater effluent discharges.* [Reserved]

§ 159.321 Enforcement.

(a) *Administrative Penalties*—(1) *Violations.* Any person who violates this subpart may be assessed a class I or class II civil penalty by the Secretary or his delegatee.

(2) *Classes of penalties.* (i) *Class I.* The amount of a class I civil penalty under this section may not exceed $10,000 per violation, except that the maximum amount of any class I civil penalty under this section shall not exceed $25,000. Before assessing a civil penalty under this subparagraph, the Secretary or his delegatee shall give to the person to be assessed such penalty written notice of the Secretary's proposal to assess the penalty and the opportunity to request, within 30 days of the date the notice is received by such person, a hearing on the proposed penalty. Such hearing shall not be subject to 5 U.S.C. 554 or 556, but shall provide a reasonable opportunity to be heard and to present evidence.

(ii) *Class II.* The amount of a class II civil penalty under this section may not exceed $10,000 per day for each day during which the violation continues, except that the maximum amount of any class II civil penalty under this section shall not exceed $125,000. Except as otherwise provided in paragraph (a) of this section, a class II civil penalty shall be assessed and collected in the same manner, and subject to the same provisions as in the case of civil penalties assessed and collected after notice and an opportunity for hearing on the record in accordance with 5 U.S.C. 554. Proceedings to assess a class II administrative civil penalty under this section will be governed by 33 CFR Part 20.

(3) *Rights of interested persons.* (i) *Public notice.* Before issuing an order assessing a class II civil penalty under this paragraph, the Secretary shall provide public notice of and reasonable opportunity to comment on the proposed issuance of each order.

(ii) *Presentation of evidence.* Any person who comments on a proposed assessment of a class II civil penalty under this section shall be given notice of any hearing held under paragraph (a) of this section, and of the order assessing such penalty. In any hearing held under paragraph (a)(3) of this section, such person shall have a reasonable opportunity to be heard and present evidence.

(iii) *Rights of interested persons to a hearing.* If no hearing is held under paragraph (a)(2) of this section before issuance of an order assessing a class II civil penalty under this section, any person who commented on the proposed assessment may petition, within 30 days after the issuance of such an order, the Secretary or his delegatee to set aside such order and provide a hearing on the penalty. If the evidence presented by the petitioner in support of the petition is material and was not considered in the issuance of the order, the Secretary, or his delegatee, shall immediately set aside such order and provide a hearing in accordance with paragraph (a)(2)(ii) of this section. If the Secretary or his delegatee denies a hearing under this clause, the Secretary or his delegatee shall provide to

the petitioner and publish in the FEDERAL REGISTER notice of and the reasons for such denial.

(b) *Civil judicial penalties*—(1) *Generally*. Any person who violates this subpart shall be subject to a civil penalty not to exceed $25,000 per day for each violation. Each day a violation continues constitutes a separate violation.

(2) *Limitation*. A person is not liable for a civil judicial penalty under this paragraph for a violation if the person has been assessed a civil administrative penalty under paragraph (a) of this section for the violation.

(c) *Determination of amount*. In determining the amount of a civil penalty under paragraphs (a) or (b) of this section, the court or the Secretary or his delegatee shall consider the seriousness of the violation, any history of such violations, any good-faith efforts to comply with applicable requirements, the economic impact of the penalty on the violator, and other such matters as justice may require.

(d) *Criminal penalties*—(1) *Negligent violations*. Any person who negligently violates this subpart commits a Class A misdemeanor.

(2) *Knowing violations*. Any person who knowingly violates this subpart commits a Class D felony.

(3) *False statements*. Any person who knowingly makes any false statement, representation, or certification in any record, report or other document filed or required to be maintained under this subpart, or who falsifies, tampers with, or knowingly renders inaccurate any testing or monitoring device or method required to be maintained under this subpart commits a Class D felony.

(e) *Awards*. (1) The Secretary or his delegatee or the court, when assessing any fines or civil penalties, as the case may be, may pay from any fines or civil penalties collected under this section an amount not to exceed one-half of the penalty or fine collected to any individual who furnished information which leads to the payment of the penalty or fine. If several individuals provide such information, the amount shall be divided equitably among such individuals. No officer or employee of the United States, the State of Alaska or any Federally recognized Tribe who furnishes information or renders service in the performance of his or her official duties shall be eligible for payment under this paragraph.

(2) The Secretary, his delegatee, or a court, when assessing any fines or civil penalties, as the case may be, may pay, from any fines or civil penalties collected under this section, to the State of Alaska or any Federally recognized Tribe providing information or investigative assistance which leads to payment of the penalty or fine, an amount which reflects the level of information or investigative assistance provided. Should the State of Alaska or a Federally recognized Tribe and an individual under paragraph (e)(1) of this section be eligible for an award, the Secretary, his delegatee, or the court, as the case may be, shall divide the amount equitably.

(f) *Liability in rem*. A cruise vessel operated in violation of this subpart is liable in rem for any fine imposed under paragraph (c) of this section or for any civil penalty imposed under paragraphs (a) or (b) of this section, and may be proceeded against in the United States district court of any district in which the cruise vessel may be found.

SUBCHAPTER P—PORTS AND WATERWAYS SAFETY

PART 160—PORTS AND WATERWAYS SAFETY—GENERAL

Subpart A—General

Sec.
160.1 Purpose.
160.3 Definitions.
160.5 Delegations.
160.7 Appeals.

Subpart B—Control of Vessel and Facility Operations

160.101 Purpose.
160.103 Applicability.
160.105 Compliance with orders.
160.107 Denial of entry.
160.109 Waterfront facility safety.
160.111 Special orders applying to vessel operations.
160.113 Prohibition of vessel operation and cargo transfers.
160.115 Withholding of clearance.

Subpart C—Notifications of Arrival, Hazardous Conditions, and Certain Dangerous Cargoes

160.201 General.
160.202 Applicability.
160.203 Exemptions.
160.204 Definitions.
160.206 Information required in an NOA.
160.208 Changes to a submitted NOA.
160.210 Methods for submitting an NOA.
160.212 When to submit an NOA.
160.214 Waivers.
160.215 Notice of hazardous conditions.

Subpart D—Crewmember Identification

160.300 Applicability.
160.305 Exceptions.
160.310 Definitions.
160.315 Crewmember identification requirement.
160.320 Sanctions and vessel control.

AUTHORITY: 33 U.S.C. 1223, 1231; 46 U.S.C. Chapter 701; Department of Homeland Security Delegation No. 0170.1. Subpart C is also issued under the authority of 33 U.S.C. 1225 and 46 U.S.C. 3715.

SOURCE: CGD 79–026, 48 FR 35404, Aug. 4, 1983, unless otherwise noted.

Subpart A—General

§ 160.1 Purpose.

(a) This subchapter contains regulations implementing the Ports and Waterways Safety Act (33 U.S.C. 1221) and related statutes.

§ 160.3 Definitions.

For the purposes of this subchapter:

Bulk means material in any quantity that is shipped, stored, or handled without the benefit of package, label, mark or count and carried in integral or fixed independent tanks.

Captain of the Port means the Coast Guard officer designated by the Commandant to command a Captain of the Port Zone as described in part 3 of this chapter.

Commandant means the Commandant of the United States Coast Guard.

Deviation means any departure from any rule in this subchapter.

Director, Vessel Traffic Services means the Coast Guard officer designated by the Commandant to command a Vessel Traffic Service (VTS) as described in part 161 of this chapter.

District Commander means the Coast Guard officer designated by the Commandant to command a Coast Guard District as described in part 3 of this chapter.

ETA means estimated time of arrival.

Length of Tow means, when towing with a hawser, the length in feet from the stern of the towing vessel to the stern of the last vessel in tow. When pushing ahead or towing alongside, length of tow means the tandem length in feet of the vessels in tow excluding the length of the towing vessel.

Person means an individual, firm, corporation, association, partnership, or governmental entity.

State means each of the several States of the United States, the District of Columbia, the Commonwealth of Puerto Rico, Guam, American Samoa, the United States Virgin Islands, the Trust Territories of the Pacific Islands, the Commonwealth of the Northern Marianas Islands, and any other commonwealth, territory, or possession of the United States.

Tanker means a self-propelled tank vessel constructed or adapted primarily to carry oil or hazardous materials in bulk in the cargo spaces.

Tank Vessel means a vessel that is constructed or adapted to carry, or that carries, oil or hazardous material in bulk as cargo or cargo residue.

Vehicle means every type of conveyance capable of being used as a means of transportation on land.

Vessel means every description of watercraft or other artificial contrivance used, or capable of being used, as a means of transportation on water.

Vessel Traffic Services (VTS) means a service implemented under part 161 of this chapter by the United States Coast Guard designed to improve the safety and efficiency of vessel traffic and to protect the environment. The VTS has the capability to interact with marine traffic and respond to traffic situations developing in the VTS area.

Vessel Traffic Service Area or *VTS Area* means the geographical area encompassing a specific VTS area of service as described in part 161 of this chapter. This area of service may be subdivided into sectors for the purpose of allocating responsibility to individual Vessel Traffic Centers or to identify different operating requirements.

NOTE: Although regulatory jurisdiction is limited to the navigable waters of the United States, certain vessels will be encouraged or may be required, as a condition of port entry, to report beyond this area to facilitate traffic management within the VTS area.

VTS Special Area means a waterway within a VTS area in which special operating requirements apply.

[CGD 90–020, 59 FR 36323, July 15, 1994, as amended at USCG–2010–0351, 75 FR 36286, June 25, 2010]

§ 160.5 Delegations.

(a) District Commanders and Captains of the Ports are delegated the authority to establish safety zones.

(b) Under the provisions of §§ 6.04–1 and 6.04–6 of this chapter, District Commanders and Captains of the Ports have been delegated authority to establish security zones.

(c) Under the provisions of § 1.05–1 of this chapter, District Commanders have been delegated authority to establish regulated navigation areas.

(d) Subject to the supervision of the cognizant Captain of the Port and District Commander, Directors, Vessel Traffic Services are delegated authority under 33 CFR 1.01–30 to discharge the duties of the Captain of the Port that involve directing the operation, movement, and anchorage of vessels within a Vessel Traffic Service area including management of vessel traffic within anchorages, regulated navigation areas and safety zones, and to enforce Vessel Traffic Service and ports and waterways safety regulations. This authority may be exercised by Vessel Traffic Center personnel. The Vessel Traffic Center may, within the Vessel Traffic Service area, provide information, make recommendations, or, to a vessel required under part 161 of this chapter to participate in a Vessel Traffic Service, issue an order, including an order to operate or anchor as directed; require the vessel to comply with orders issued; specify times of entry, movement or departure; restrict operations as necessary for safe operation under the circumstances; or take other action necessary for control of the vessel and the safety of the port or of the marine environment.

[CGD 79–026, 48 FR 35404, Aug. 4, 1983, as amended by CGD 88–037, 53 FR 21815, June 10, 1988; CGD 90–020, 59 FR 36324, July 15, 1994; USCG–2010–0351, 75 FR 36287, June 25, 2010]

§ 160.7 Appeals.

(a) Any person directly affected by a safety zone or an order or direction issued under this subchapter may request reconsideration by the official who issued it or in whose name it was issued. This request may be made orally or in writing, and the decision of the official receiving the request may be rendered orally or in writing.

(b) Any person directly affected by the establishment of a safety zone or by an order or direction issued by, or on behalf of, a Captain of the Port may appeal to the District Commander through the Captain of the Port. The appeal must be in writing, except as allowed under paragraph (e) of this section, and shall contain complete supporting documentation and evidence which the appellant wishes to have considered. Upon receipt of the appeal, the District Commander may direct a representative to gather and submit documentation or other evidence which

would be necessary or helpful to a resolution of the appeal. A copy of this documentation and evidence is made available to the appellant. The appellant is afforded five working days from the date of receipt to submit rebuttal materials. Following submission of all materials, the District Commander issues a ruling, in writing, on the appeal. Prior to issuing the ruling, the District Commander may, as a matter of discretion, allow oral presentation on the issues.

(c) Any person directly affected by the establishment of a safety zone or by an order or direction issued by, or on behalf of, a District Commander, or who receives an unfavorable ruling on an appeal taken under paragraph (b) of this section may appeal to the Area Commander through the District Commander. The appeal must be in writing, except as allowed under paragraph (e) of this section, and shall contain complete supporting documentation and evidence which the appellant wishes to have considered. Upon receipt of the appeal, the Area Commander may direct a representative to gather and submit documentation or other evidence which would be necessary or helpful to a resolution of the appeal. A copy of this documentation and evidence is made available to the appellant. The appellant is afforded five working days from the date of receipt to submit rebuttal materials. Following submission of all materials, the Area Commander issues a ruling, in writing, on the appeal. Prior to issuing the ruling, the Area Commander may, as a matter of discretion, allow oral presentation on the issues.

(d) Any person who receives an unfavorable ruling on an appeal taken under paragraph (c) of this section, may appeal through the Area Commander to the Assistant Commandant for Marine Safety, Security and Stewardship, U.S. Coast Guard, (CG–5), 2100 2nd St. SW., Stop 7363, Washington, DC 20593–7363. The appeal must be in writing, except as allowed under paragraph (e) of this section. The Area Commander forwards the appeal, all the documents and evidence which formed the record upon which the order or direction was issued or the ruling under paragraph (c) of this section was made, and any comments which might be relevant, to the Assistant Commandant for Marine Safety, Security and Stewardship. A copy of this documentation and evidence is made available to the appellant. The appellant is afforded five working days from the date of receipt to submit rebuttal materials to the Assistant Commandant for Marine Safety, Security and Stewardship. The decision of the Assistant Commandant for Marine Safety, Security and Stewardship is based upon the materials submitted, without oral argument or presentation. The decision of the Assistant Commandant for Marine Safety, Security and Stewardship is issued in writing and constitutes final agency action.

(e) If the delay in presenting a written appeal would have significant adverse impact on the appellant, the appeal under paragraphs (b) and (c) of this section may initially be presented orally. If an initial presentation of the appeal is made orally, the appellant must submit the appeal in writing within five days of the oral presentation to the Coast Guard official to whom the presentation was made. The written appeal must contain, at a minimum, the basis for the appeal and a summary of the material presented orally. If requested, the official to whom the appeal is directed may stay the effect of the action while the ruling is being appealed.

[CGD 79–026, 48 FR 35404, Aug. 4, 1983, as amended by CGD 88–052, 53 FR 25122, July 1, 1988; CGD 96–026, 61 FR 33668, June 28, 1996; CGD 97–023, 62 FR 33364, June 19, 1997; USCG–2002–12471, 67 FR 41333, June 18, 2002; USCG–2006–25150, 71 FR 39211, July 12, 2006; 72 FR 17409, Apr. 9, 2007; USCG–2010–0351, 75 FR 36287, June 25, 2010; USCG–2011–0257, 76 FR 31838, June 2, 2011]

Subpart B—Control of Vessel and Facility Operations

§ 160.101 Purpose.

This subpart describes the authority exercised by District Commanders and Captains of the Ports to insure the safety of vessels and waterfront facilities, and the protection of the navigable waters and the resources therein. The controls described in this subpart

are directed to specific situations and hazards.

§ 160.103 Applicability.

(a) This subpart applies to any—

(1) Vessel on the navigable waters of the United States, except as provided in paragraphs (b) and (c) of this section;

(2) Bridge or other structure on or in the navigable waters of the United States; and

(3) Land structure or shore area immediately adjacent to the navigable waters of the United States.

(b) This subpart does not apply to any vessel on the Saint Lawrence Seaway.

(c) Except pursuant to international treaty, convention, or agreement, to which the United States is a party, this subpart does not apply to any foreign vessel that is not destined for, or departing from, a port or place subject to the jurisdiction of the United States and that is in:

(1) Innocent passage through the territorial sea of the United States;

(2) Transit through the navigable waters of the United States which form a part of an international strait.

§ 160.105 Compliance with orders.

Each person who has notice of the terms of an order issued under this subpart must comply with that order.

§ 160.107 Denial of entry.

Each District Commander or Captain of the Port, subject to recognized principles of international law, may deny entry into the navigable waters of the United States or to any port or place under the jurisdiction of the United States, and within the district or zone of that District Commander or Captain of the Port, to any vessel not in compliance with the provisions of the Port and Tanker Safety Act (33 U.S.C. 1221–1232) or the regulations issued thereunder.

§ 160.109 Waterfront facility safety.

(a) To prevent damage to, or the destruction of, any bridge or other structure on or in the navigable waters of the United States, or any land structure or shore area immediately adjacent to such waters, and to protect the navigable waters and the resources therein from harm resulting from vessel or structure damage, destruction, or loss, each District Commander or Captain of the Port may:

(1) Direct the handling, loading, unloading, storage, and movement (including the emergency removal, control and disposition) of explosives or other dangerous articles and substances, including oil or hazardous material as those terms are defined in 46 U.S.C. 2101 on any structure on or in the navigable waters of the United States, or any land structure or shore area immediately adjacent to those waters; and

(2) Conduct examinations to assure compliance with the safety equipment requirements for structures.

[CGD 79–026, 48 FR 35404, Aug. 4, 1983, as amended by USCG–1998–3799, 63 FR 35531, June 30, 1998]

§ 160.111 Special orders applying to vessel operations.

Each District Commander or Captain of the Port may order a vessel to operate or anchor in the manner directed when:

(a) The District Commander or Captain of the Port has reasonable cause to believe that the vessel is not in compliance with any regulation, law or treaty;

(b) The District Commander or Captain of the Port determines that the vessel does not satisfy the conditions for vessel operation and cargo transfers specified in § 160.113; or

(c) The District Commander or Captain of the Port has determined that such order is justified in the interest of safety by reason of weather, visibility, sea conditions, temporary port congestion, other temporary hazardous circumstances, or the condition of the vessel.

§ 160.113 Prohibition of vessel operation and cargo transfers.

(a) Each District Commander or Captain of the Port may prohibit any vessel, subject to the provisions of chapter 37 of Title 46, U.S. Code, from operating in the navigable waters of the United States, or from transferring cargo or residue in any port or place under the jurisdiction of the United States, and

within the district or zone of that District Commander or Captain of the Port, if the District Commander or the Captain of the Port determines that the vessel's history of accidents, pollution incidents, or serious repair problems creates reason to believe that the vessel may be unsafe or pose a threat to the marine environment.

(b) The authority to issue orders prohibiting operation of the vessels or transfer of cargo or residue under paragraph (a) of this section also applies if the vessel:

(1) Fails to comply with any applicable regulation;

(2) Discharges oil or hazardous material in violation of any law or treaty of the United States;

(3) Does not comply with applicable vessel traffic service requirements;

(4) While underway, does not have at least one deck officer on the navigation bridge who is capable of communicating in the English language.

(c) When a vessel has been prohibited from operating in the navigable waters of the United States under paragraphs (a) or (b) of this section, the District Commander or Captain of the Port may allow provisional entry into the navigable waters of the United States, or into any port or place under the jurisdiction of the United States and within the district or zone of that District Commander or Captain of the Port, if the owner or operator of such vessel proves to the satisfaction of the District Commander or Captain of the Port, that the vessel is not unsafe or does not pose a threat to the marine environment, and that such entry is necessary for the safety of the vessel or the persons on board.

(d) A vessel which has been prohibited from operating in the navigable waters of the United States, or from transferring cargo or residue in a port or place under the jurisdiction of the United States under the provisions of paragraph (a) or (b)(1), (2) or (3) of this section, may be allowed provisional entry if the owner or operator proves, to the satisfaction of the District Commander or Captain of the Port that has jurisdiction, that the vessel is no longer unsafe or a threat to the environment, and that the condition which gave rise to the prohibition no longer exists.

[CGD 79–026, 48 FR 35404, Aug. 4, 1983, as amended by CGD 96–026, 61 FR 33668, June 28, 1996; USCG–1998–3799, 63 FR 35531, June 30, 1998; USCG–2006–24371, 74 FR 11212, Mar. 16, 2009]

§ 160.115 Withholding of clearance.

Each District Commander or Captain of the Port may request the Secretary of the Treasury, or the authorized representative thereof, to withhold or revoke the clearance required by 46 U.S.C. App. 91 of any vessel, the owner or operator of which is subject to any penalties under 33 U.S.C. 1232.

[CGD 79–026, 48 FR 35404, Aug. 4, 1983; 48 FR 39059, Aug. 29, 1983, as amended by USCG–1998–3799, 63 FR 35531, June 30, 1998]

Subpart C—Notification of Arrival, Hazardous Conditions, and Certain Dangerous Cargos

SOURCE: USCG–2002–11865, 68 FR 9543, Feb. 28, 2003, unless otherwise noted.

§ 160.201 General.

This subpart contains requirements and procedures for submitting Notices of Arrival (NOA) and Notice of Hazardous Condition. The sections in this subpart describe:

(a) Applicability and exemptions from requirements in this subpart;

(b) Required information in an NOA;

(c) Required changes to an NOA;

(d) Methods and times for submission of an NOA and changes to an NOA;

(e) How to obtain a waiver; and

(f) Requirements for submission of the Notice of Hazardous Conditions.

§ 160.202 Applicability.

(a) This subpart applies to U.S. and foreign vessels bound for or departing from ports or places in the United States.

(b) This subpart does not apply to U.S. recreational vessels under 46 U.S.C. 4301 *et seq.*, but does apply to foreign recreational vessels.

(c) Unless otherwise specified in this subpart, the owner, agent, master, operator, or person in charge of a vessel regulated by this subpart is responsible

for compliance with the requirements in this subpart.

(d) Towing vessels controlling a barge or barges required to submit an NOA under this subpart must submit only one NOA containing the information required for the towing vessel and each barge under its control.

[USCG–2002–11865, 68 FR 9543, Feb. 28, 2003, as amended by USCG–2004–19963, 70 FR 74669, Dec. 16, 2005]

§ 160.203 Exemptions.

(a) Except for reporting notice of hazardous conditions, the following vessels are exempt from requirements in this subpart:

(1) Passenger and supply vessels when they are employed in the exploration for or in the removal of oil, gas, or mineral resources on the continental shelf.

(2) Oil Spill Recovery Vessels (OSRVs) when engaged in actual spill response operations or during spill response exercises.

(3) Vessels operating upon the following waters:

(i) Mississippi River between its sources and mile 235, Above Head of Passes;

(ii) Tributaries emptying into the Mississippi River above mile 235;

(iii) Atchafalaya River above its junction with the Plaquemine-Morgan City alternate waterway and the Red River; and

(iv) The Tennessee River from its confluence with the Ohio River to mile zero on the Mobile River and all other tributaries between those two points.

(b) If not carrying certain dangerous cargo or controlling another vessel carrying certain dangerous cargo, the following vessels are exempt from NOA requirements in this subpart:

(1) Vessels 300 gross tons or less, except for foreign vessels entering any port or place in the Seventh Coast Guard District as described in 33 CFR 3.35–1(b).

(2) Vessels operating exclusively within a Captain of the Port Zone.

(3) Vessels arriving at a port or place under force majeure.

(4) Towing vessels and barges operating solely between ports or places in the continental United States.

(5) Public vessels.

(6) Except for tank vessels, U.S. vessels operating solely between ports or places in the United States on the Great Lakes.

(c) Vessels less than 500 gross tons need not submit the International Safety Management (ISM) Code Notice (Entry (7) to Table 160.206).

(d) Vessels operating solely between ports or places in the continental United States need not submit the Cargo Declaration (Customs Form 1302), (Entry (8) to Table 160.206).

(e) This section does not exempt any vessel from compliance with the U.S. Customs Service (USCS) reporting or submission requirements.

(f) U.S. vessels need not submit the International Ship and Port Facility Code (ISPS) Notice information (Entry (9) to Table 160.206).

[USCG–2002–11865, 68 FR 9543, Feb. 28, 2003, as amended by USCG–2003–14749, 68 FR 39313, July 1, 2003; 68 FR 63735, Nov. 10, 2003]

EFFECTIVE DATE NOTE: By USCG–2002–11865, 68 FR 27908, May 22, 2003, in § 160.203, paragraphs (d) and (e) were suspended, effective May 22, 2003.

§ 160.204 Definitions.

As used in this subpart:

Agent means any person, partnership, firm, company or corporation engaged by the owner or charterer of a vessel to act in their behalf in matters concerning the vessel.

Barge means a non-self propelled vessel engaged in commerce.

Carried in bulk means a commodity that is loaded or carried on board a vessel without containers or labels and received and handled without mark or count.

Certain dangerous cargo (CDC) includes any of the following:

(1) Division 1.1 or 1.2 explosives as defined in 49 CFR 173.50.

(2) Division 1.5D blasting agents for which a permit is required under 49 CFR 176.415 or, for which a permit is required as a condition of a Research and Special Programs Administration exemption.

(3) Division 2.3 ''poisonous gas'', as listed in 49 CFR 172.101 that is also a ''material poisonous by inhalation'' as defined in 49 CFR 171.8, and that is in a quantity in excess of 1 metric ton per vessel.

(4) Division 5.1 oxidizing materials for which a permit is required under 49 CFR 176.415 or for which a permit is required as a condition of a Research and Special Programs Administration exemption.

(5) A liquid material that has a primary or subsidiary classification of Division 6.1 ''poisonous material'' as listed in 49 CFR 172.101 that is also a ''material poisonous by inhalation,'' as defined in 49 CFR 171.8 and that is in a bulk packaging, or that is in a quantity in excess of 20 metric tons per vessel when not in a bulk packaging.

(6) Class 7, ''highway route controlled quantity'' radioactive material or ''fissile material, controlled shipment,'' as defined in 49 CFR 173.403.

(7) All bulk liquefied gas cargo carried under 46 CFR 151.50–31 or listed in 46 CFR 154.7 that is flammable and/or toxic and that is not carried as certain dangerous cargo residue (CDC residue).

(8) The following bulk liquids except when carried as CDC residue:

(i) Acetone cyanohydrin;

(ii) Allyl alcohol;

(iii) Chlorosulfonic acid;

(iv) Crotonaldehyde;

(v) Ethylene chlorohydrin;

(vi) Ethylene dibromide;

(vii) Methacrylonitrile;

(viii) Oleum (fuming sulfuric acid); and

(ix) Propylene oxide, alone or mixed with ethylene oxide.

(9) The following bulk solids:

(i) Ammonium nitrate listed as a Division 5.1 (oxidizing) material in 49 CFR 172.101 except when carried as CDC residue; and

(ii) Ammonium nitrate based fertilizer listed as a Division 5.1 (oxidizing) material in 49 CFR 172.101 except when carried as CDC residue.

Certain dangerous cargo residue (CDC residue) includes any of the following:

(1) Ammonium nitrate in bulk or ammonium nitrate based fertilizer in bulk remaining after all saleable cargo is discharged, not exceeding 1,000 pounds in total and not individually accumulated in quantities exceeding two cubic feet.

(2) For bulk liquids and liquefied gases, the cargo that remains onboard in a cargo system after discharge that is not accessible through normal transfer procedures, with the exception of the following bulk liquefied gas cargoes carried under 46 CFR 151.50–31 or listed in 46 CFR 154.7:

(i) Ammonia, anhydrous;

(ii) Chlorine;

(iii) Ethane;

(iv) Ethylene oxide;

(v) Methane (LNG);

(vi) Methyl bromide;

(vii) Sulfur dioxide; and

(viii) Vinyl chloride.

Charterer means the person or organization that contracts for the majority of the carrying capacity of a ship for the transportation of cargo to a stated port for a specified period. This includes ''time charterers'' and ''voyage charterers.''

Crewmember means all persons carried on board the vessel to provide navigation and maintenance of the vessel, its machinery, systems, and arrangements essential for propulsion and safe navigation or to provide services for other persons on board.

Great Lakes means Lakes Superior, Michigan, Huron, Erie, and Ontario, their connecting and tributary waters, the Saint Lawrence River as far as Saint Regis, and adjacent port areas.

Gross tons means the tonnage determined by the tonnage authorities of a vessel's flag state in accordance with the national tonnage rules in force before the entry into force of the International Convention on Tonnage Measurement of Ships, 1969 (''Convention''). For a vessel measured only under Annex I of the Convention, gross tons means that tonnage. For a vessel measured under both systems, the higher gross tonnage is the tonnage used for the purposes of the 300-gross-ton threshold.

Hazardous condition means any condition that may adversely affect the safety of any vessel, bridge, structure, or shore area or the environmental quality of any port, harbor, or navigable waterway of the United States. It may, but need not, involve collision, allision, fire, explosion, grounding, leaking, damage, injury or illness of a person aboard, or manning-shortage.

Nationality means the state (nation) in which a person is a citizen or to which a person owes permanent allegiance.

Operator means any person including, but not limited to, an owner, a charterer, or another contractor who conducts, or is responsible for, the operation of a vessel.

Persons in addition to crewmembers mean any person onboard the vessel, including passengers, who are not included on the list of crewmembers.

Port or place of departure means any port or place in which a vessel is anchored or moored.

Port or place of destination means any port or place in which a vessel is bound to anchor or moor.

Public vessel means a vessel that is owned or demise-(bareboat) chartered by the government of the United States, by a State or local government, or by the government of a foreign country and that is not engaged in commercial service.

Time charterer means the party who hires a vessel for a specific amount of time. The owner and his crew manage the vessel, but the charterer selects the ports of destination.

Voyage charterer means the party who hires a vessel for a single voyage. The owner and his crew manage the vessel, but the charterer selects the ports of destination.

[USCG–2002–11865, 68 FR 9543, Feb. 28, 2003, as amended by USCG–2004–19963, 70 FR 74669, Dec. 16, 2005; 75 FR 59620, Sept. 28, 2010]

§ 160.206 Information required in an NOA.

(a) Each NOA must contain all of the information items specified in Table 160.206.

TABLE 160.206—NOA INFORMATION ITEMS

Required information	Vessels not carrying CDC	Vessels carrying CDC	
		Vessels	Towing vessels controlling vessels carrying CDC
(1) Vessel Information:			
(i) Name;	X	X	X
(ii) Name of the registered owner;	X	X	X
(iii) Country of registry;	X	X	X
(iv) Call sign;	X	X	X
(v) International Maritime Organization (IMO) international number or, if vessel does not have an assigned IMO international number, substitute with official number;	X	X	X
(vi) Name of the operator;	X	X	X
(vii) Name of the charterer; and	X	X	X
(viii) Name of classification society	X	X	X
(ix) USCG Vessel Response Plan Control Number, if applicable	X	X	X
(2) Voyage Information:			
(i) Names of last five ports or places visited;	X	X	X
(ii) Dates of arrival and departure for last five ports or places visited;	X	X	X
(iii) For each port or place in the United States to be visited list the names of the receiving facility, the port or place, the city, and the state;	X	X	X
(iv) For each port or place in the United States to be visited, the estimated date and time of arrival;	X	X	X
(v) For each port or place in the United States to be visited, the estimated date and time of departure;	X	X	X
(vi) The location (port or place and country) or position (latitude and longitude or waterway and mile marker) of the vessel at the time of reporting; and	X	X	X
(vii) The name and telephone number of a 24-hour point of contact	X	X	X
(3) Cargo Information:			
(i) A general description of cargo, other than CDC, onboard the vessel (e.g.: grain, container, oil, etc.);	X	X	X
(ii) Name of each certain dangerous cargo carried, including cargo UN number, if applicable; and		X	X
(iii) Amount of each certain dangerous cargo carried		X	X
(4) Information for each Crewmember Onboard:			
(i) Full name;	X	X	X
(ii) Date of birth;	X	X	X
(iii) Nationality;	X	X	X

TABLE 160.206—NOA INFORMATION ITEMS—Continued

Required information	Vessels not carrying CDC	Vessels carrying CDC	
		Vessels	Towing vessels controlling vessels carrying CDC
(iv) Passport or mariners document number (type of identification and number);	X	X	X
(v) Position or duties on the vessel; and	X	X	X
(vi) Where the crewmember embarked (list port or place and country)	X	X	X
(5) Information for each Person Onboard in Addition to Crew:			
(i) Full name;	X	X	X
(ii) Date of birth;	X	X	X
(iii) Nationality;	X	X	X
(iv) Passport number; and	X	X	X
(v) Where the person embarked (list port or place and country)	X	X	X
(6) Operational condition of equipment required by § 164.35 of this chapter	X	X	X
(7) International Safety Management (ISM) Code Notice:			
(i) The date of issuance for the company's Document of Compliance certificate that covers the vessel;	X	X	X
(ii) The date of issuance for the vessel's Safety Management Certificate; and	X	X	X
(iii) The name of the Flag Administration, or the recognized organization(s) representing the vessel flag administration, that issued those certificates	X	X	X
(8) Cargo Declaration (Customs Form 1302) as described in 19 CFR 4.7	X	X	X
(9) International Ship and Port Facility Code (ISPS) Notice*:			
(i) The date of issuance for the vessel's International Ship Security Certificate (ISSC), if any;	X	X	X
(ii) Whether the ISSC, if any, is an initial Interim ISSC, subsequent and consecutive Interim ISSC, or final ISSC;	X	X	X
(iii) Declaration that the approved ship security plan, if any, is being implemented;	X	X	X
(iv) If a subsequent and consecutive Interim ISSC, the reasons therefor;	X	X	X
(v) The name and 24-hour contact information for the Company Security Officer; and	X	X	X
(vi) The name of the Flag Administration, or the recognized security organization(s) representing the vessel flag Administration that issued the ISSC.	X	X	X

*The information required by items 9(i)-(iii) need not be submitted before January 1, 2004. All other information required by item 9 need not be submitted before July 1, 2004.

(b) Vessels operating solely between ports or places in the continental United States need submit only the name of and date of arrival and departure for the last port or places visited to meet the requirements in entries (2)(i) and (ii) to Table 160.206 of this section.

(c) You may submit a copy of INS Form I–418 to meet the requirements of entries (4) and (5) in Table 160.206.

(d) Any vessel planning to enter two or more consecutive ports or places in the United States during a single voyage may submit one consolidated Notification of Arrival at least 96 hours before entering the first port or place of destination. The consolidated notice must include the name of the port or place and estimated arrival and departure date for each destination of the voyage. Any vessel submitting a consolidated notice under this section must still meet the requirements of § 160.208 of this part concerning requirements for changes to an NOA.

[USCG–2002–11865, 68 FR 9543, Feb. 28, 2003, as amended by USCG–2003–14749, 68 FR 39313, July 1, 2003; 68 FR 63735, Nov. 10, 2003; USCG–2008–1070, 78 FR 60135, Sept. 30, 2013]

EFFECTIVE DATE NOTE: By USCG–2002–11865, 68 FR 27908, May 22, 2003, in § 160.206, in paragraph (a), item (8) in table 160.206 was suspended, effective May 22, 2003.

§ 160.208 Changes to a submitted NOA.

(a) Unless otherwise specified in this section, when submitted NOA information changes, vessels must submit a notice of change within the times required in § 160.212.

(b) Changes in the following information need not be reported:

(1) Changes in arrival or departure times that are less than six (6) hours;

(2) Changes in vessel location or position of the vessel at the time of reporting (entry (2)(vi) to Table 160.206); and

(3) Changes to crewmembers' position or duties on the vessel (entry (5)(v) to Table 160.206).

(c) When reporting changes, submit only the name of the vessel, original NOA submission date, the port of arrival, the specific items to be corrected, and the new location or position of the vessel at the time of reporting. Only changes to NOA information need to be submitted.

§ 160.210 Methods for submitting an NOA.

(a) *Submission to the National Vessel Movement Center (NVMC).* Except as provided in paragraphs (b) and (c) of this section, vessels must submit NOA information required by § 160.206 (entries 1 through 9 in Table 160.206) to the NVMC, United States Coast Guard, 408 Coast Guard Drive, Kearneysville, WV 25430, by:

(1) Electronic submission via the electronic Notice of Arrival and Departure (eNOAD) and consisting of the following three formats:

(i) A Web site that can be used to submit NOA information directly to the NVMC, accessible from the NVMC web site at *http://www.nvmc.uscg.gov;*

(ii) Electronic submission of Extensible Markup Language (XML) formatted documents via web service;

(iii) Electronic submission via Microsoft InfoPath; contact the NVMC at *sans@nvmc.uscg.gov* or by telephone at 1–800–708–9823 or 304–264–2502 for more information;

(2) E-mail at *sans@nvmc.uscg.gov*. Workbook available at *http://www.nvmc.uscg.gov;*

(3) Fax at 1–800–547–8724 or 304–264–2684. Workbook available at *http://www.nvmc.uscg.gov;* or,

(4) Telephone at 1–800–708–9823 or 304–264–2502.

(b) *Saint Lawrence Seaway transits.* Those vessels transiting the Saint Lawrence Seaway inbound, bound for a port or place in the United States, may meet the submission requirements of paragraph (a) of this section by submitting the required information to the Saint Lawrence Seaway Development Corporation and the Saint Lawrence Seaway Management Corporation of Canada by fax at 315–764–3235 or at 315–764–3200. The Cargo Declaration (Customs Form 1302) in entry (8) in Table 160.206 must be submitted electronically to the USCS, as required by paragraph (d) of this section.

(c) *Seventh Coast Guard District.* Those foreign vessels 300 or less gross tons operating in the Seventh Coast Guard District must submit an NOA to the cognizant Captain of the Port (COTP). The Cargo Declaration (Customs Form 1302) in entry (8) in Table 160.206 must be submitted electronically to the USCS, as required by paragraph (d) of this section.

(d) *Submission to the United States Customs Service's Sea Automated Manifest System (AMS).* (1) Beginning July 1, 2003, the Cargo Declaration (Customs Form 1302) in entry (8) in Table 160.206 must be submitted electronically to the USCS Sea AMS by one of the following methods:

(i) By direct connection with USCS or by purchasing the proper software; or

(ii) Using a service provider or a Port Authority.

(2) To become a participant in Sea AMS, submitters must provide a letter of intent to USCS prior to first submission.

[USCG–2002–11865, 68 FR 9543, Feb. 28, 2003; 68 FR 63735, Nov. 10, 2003, as amended by USCG–2004–19963, 70 FR 74669, Dec. 16, 2005]

EFFECTIVE DATE NOTE: By USCG–2002–11865, 68 FR 27908, May 22, 2003, in § 160.210, the last sentence of paragraph (b), the last sentence of paragraph (c), and paragraph (d) were suspended, effective May 22, 2003.

§ 160.212 When to submit an NOA.

(a) *Submission of NOA.* (1) Except as set out in paragraph (a)(2) of this section, all vessels must submit NOAs within the times required in paragraph (a)(3) of this section.

(2) Towing vessels, when in control of a vessel carrying CDC and operating solely between ports or places in the continental United States, must submit an NOA before departure but at

least 12 hours before entering the port or place of destination.

(3) Times for submitting NOAs areas follows:

If your voyage time is—	You must submit an NOA—
(i) 96 hours or more; or.	At least 96 hours before entering the port or place of destination; or
(ii) Less than 96 hours.	Before departure but at least 24 hours before entering the port or place of destination.

(b) *Submission of changes to NOA.* (1) Except as set out in paragraph (b)(2) of this section, vessels must submit changes in NOA information within the times required in paragraph (b)(3) of this section.

(2) Towing vessels, when in control of a vessel carrying CDC and operating solely between ports or places in the continental United States, must submit changes to an NOA as soon as practicable but at least 6 hours before entering the port or place of destination.

(3) Times for submitting changes to NOAs are as follows:

If your remaining voyage time is—	Then you must submit changes to an NOA—
(i) 96 hours or more;.	As soon as practicable but at least 24 hours before entering the port or place of destination;
(ii) Less than 96 hours but not less than 24 hours; or	As soon as practicable but at least 24 hours before entering the port or place of destination; or
(iii) Less than 24 hours.	As soon as practicable but at least 12 hours before entering the port or place of destination.

(c) *Submission of the Cargo Declaration (Customs Form 1302).* (1) Except as set out in paragraph (c)(2) of this section, all vessels must submit to USCS the Cargo Declaration (Customs Form 1302) in entry (8) to Table 160.206, within the times required in paragraph (a)(3) of this section.

(2)(i) Except for vessels carrying containerized cargo or break bulk cargo, vessels carrying bulk cargo may submit the Cargo Declaration (Customs Form 1302), (Entry (8) to Table 160.206) before departure but at least 24 hours before entering the U.S. port or place of destination.

(ii) Vessels carrying break bulk cargo operating under a USCS exemption granted under 19 CFR 4.7(b)(4)(ii) may, during the effective period of the USCS exemption, submit the Cargo Declaration (Customs Form 1302), (Entry (8) to Table 160.206) before departure but at least 24 hours before entering the U.S. port or place of destination.

[USCG–2002–11865, 68 FR 9543, Feb. 28, 2003; 68 FR 63735, Nov. 10, 2003]

EFFECTIVE DATE NOTE: By USCG–2002–11865, 68 FR 27908, May 22, 2003, in §160.212, paragraph (c) was suspended, effective May 22, 2003.

§ 160.214 Waivers.

The Captain of the Port may waive, within that Captain of the Port's designated zone, any of the requirements of this subpart for any vessel or class of vessels upon finding that the vessel, route, area of operations, conditions of the voyage, or other circumstances are such that application of this subpart is unnecessary or impractical for purposes of safety, environmental protection, or national security.

§ 160.215 Notice of hazardous conditions.

Whenever there is a hazardous condition either aboard a vessel or caused by a vessel or its operation, the owner, agent, master, operator, or person in charge shall immediately notify the nearest Coast Guard Sector Office or Group Office. (Compliance with this section does not relieve responsibility for the written report required by 46 CFR 4.05–10.)

[USCG–2002–11865, 68 FR 9543, Feb. 28, 2003, as amended by USCG–2006–25556, 72 FR 36328, July 2, 2007]

Subpart D—Crewmember Identification

SOURCE: USCG–2007–28648, 74 FR 19140, Apr. 28, 2009, unless otherwise noted.

§ 160.300 Applicability.

(a) This subpart applies to crewmembers on the following vessels in the navigable waters of the United States en route to a U.S. port or place of destination or at a U.S. port or place:

(1) A foreign vessel engaged in commercial service, and

(2) A U.S. vessel engaged in commercial service and coming from a foreign port or place of departure.

(b) This subpart also applies to the operators of the vessels listed in paragraph (a) of this section.

§ 160.305 Exceptions.

Requirements in this subpart do not apply to crewmembers and operators on a vessel bound for a U.S. port or place of destination under *force majeure*.

§ 160.310 Definitions.

As used in this subpart, and only for purposes of this supbpart—

Acceptable identification means a:

(1) Passport;

(2) U.S. Permanent Resident Card;

(3) U.S. merchant mariner document;

(4) U.S. merchant mariner credential;

(5) Transportation Worker Identification Credential (TWIC) issued by the Transportation Security Administration under 49 CFR part 1572; or

(6) Seafarer's Identification Document (SID) issued by or under the authority of the government of a country that has ratified the International Labour Organization Seafarers' Identity Documents Convention (Revised), 2003 (ILO 185), meeting all the requirements of ILO 185.

Commercial service means any type of trade or business involving the transportation of goods or individuals, except service performed by a combatant vessel.

Crewmember means all persons carried onboard a vessel to provide: navigation services; maintenance of the vessel, its machinery, or systems; arrangements essential for propulsion or safe navigation; or services for other persons onboard.

Foreign vessel means a vessel of foreign registry or operated under the authority of a country except the United States.

Navigable waters of the United States means the same as this term is defined in 33 CFR 2.36(a). This includes a 12-nautical-mile wide U.S. territorial sea as measured from the baseline, U.S. internal waters subject to tidal influence, and certain U.S. internal waters not subject to tidal influence.

Operator means any person including, but not limited to, an owner, a charterer, or another contractor who conducts, or is responsible for, the operation of a vessel.

Passport means any travel document issued by competent authority showing the bearer's origin, identity, and nationality if any, which is valid for the admission of the bearer into a foreign country.

Port or place of departure means any port or place in which a vessel is anchored or moored.

Port or place of destination means any port or place in which a vessel is bound to anchor or moor.

§ 160.315 Crewmember identification requirement.

(a) A crewmember subject to this subpart must carry and present on demand an acceptable identification. An operator subject to this subpart must ensure that every crewmember on the vessel has an acceptable identification in his or her possession when the vessel is in the navigable waters of the United States. For purposes of this section, a crewmember may secure his or her acceptable identification with the vessel's master, so long as the identification can be presented on demand.

(b) Compliance with the requirements in this section does not relieve vessel crewmembers and operators of any requirements under the Immigration and Nationality Act (INA) or INA implementing regulations. Likewise, compliance with INA requirements does not relieve vessel crewmembers and operators of the requirements in this section.

§ 160.320 Sanctions and vessel control.

Failure to comply with this subpart will subject the crewmember and operator to a civil penalty under 46 U.S.C. 70119 and the vessel to control under 33 U.S.C. 1223(b).

PART 161—VESSEL TRAFFIC MANAGEMENT

Subpart A—Vessel Traffic Services

GENERAL RULES

Sec.
161.1 Purpose and Intent.
161.2 Definitions.
161.3 Applicability.
161.4 Requirement to carry the rules.
161.5 Deviations from the rules.

161.6 Preemption.

SERVICES, VTS MEASURES, AND OPERATING REQUIREMENTS

161.10 Services.
161.11 VTS measures.
161.12 Vessel operating requirements.
161.13 VTS Special Area operating requirements.

Subpart B—Vessel Movement Reporting System

161.15 Purpose and intent.
161.16 Applicability.
161.17 Definitions.
161.18 Reporting requirements.
161.19 Sailing Plan (SP).
161.20 Position Report (PR).
161.21 Automated reporting.
161.22 Final Report (FR).
161.23 Reporting exemptions.

Subpart C—Vessel Traffic Service and Vessel Movement Reporting System Areas and Reporting Points

161.25 Vessel Traffic Service New York Area.
161.30 Vessel Traffic Service Louisville.
161.35 Vessel Traffic Service Houston/Galveston.
161.40 Vessel Traffic Service Berwick Bay.
161.45 Vessel Traffic Service St. Marys River.
161.50 Vessel Traffic Service San Francisco.
161.55 Vessel Traffic Service Puget Sound and the Cooperative Vessel Traffic Service for the Juan de Fuca Region.
161.60 Vessel Traffic Service Prince William Sound.
161.65 Vessel Traffic Service Lower Mississippi River.
161.70 Vessel Traffic Service Port Arthur.

AUTHORITY: 33 U.S.C. 1223, 1231; 46 U.S.C. 70114, 70119; Pub. L. 107–295, 116 Stat. 2064; Department of Homeland Security Delegation No. 0170.1.

SOURCE: CGD 90–020, 59 FR 36324, July 15, 1994, unless otherwise noted.

Subpart A—Vessel Traffic Services

GENERAL RULES

§ 161.1 Purpose and Intent.

(a) The purpose of this part is to promulgate regulations implementing and enforcing certain sections of the Ports and Waterways Safety Act (PWSA) setting up a national system of Vessel Traffic Services that will enhance navigation, vessel safety, and marine environmental protection, and promote safe vessel movement by reducing the potential for collisions, rammings, and groundings, and the loss of lives and property associated with these incidents within VTS areas established hereunder.

(b) Vessel Traffic Services provide the mariner with information related to the safe navigation of a waterway. This information, coupled with the mariner's compliance with the provisions set forth in this part, enhances the safe routing of vessels through congested waterways or waterways of particular hazard. Under certain circumstances, a VTS may issue directions to control the movement of vessels in order to minimize the risk of collision between vessels, or damage to property or the environment.

(c) The owner, operator, charterer, master, or person directing the movement of a vessel remains at all times responsible for the manner in which the vessel is operated and maneuvered, and is responsible for the safe navigation of the vessel under all circumstances. Compliance with these rules or with a direction of the VTS is at all times contingent upon the exigencies of safe navigation.

(d) Nothing in this part is intended to relieve any vessel, owner, operator, charterer, master, or person directing the movement of a vessel from the consequences of any neglect to comply with this part or any other applicable law or regulation (e.g., the International Regulations for Prevention of Collisions at Sea, 1972 (72 COLREGS) or the Inland Navigation Rules) or of the neglect of any precaution which may be required by the ordinary practice of seamen, or by the special circumstances of the case.

§ 161.2 Definitions.

For the purposes of this part:

Cooperative Vessel Traffic Services (CVTS) means the system of vessel traffic management established and jointly operated by the United States and Canada within adjoining waters. In addition, CVTS facilitates traffic movement and anchorages, avoids jurisdictional disputes, and renders assistance in emergencies in adjoining United States and Canadian waters.

Hazardous Vessel Operating Condition means any condition related to a vessel's ability to safely navigate or maneuver, and includes, but is not limited to:

(1) The absence or malfunction of vessel operating equipment, such as propulsion machinery, steering gear, radar system, gyrocompass, depth sounding device, automatic radar plotting aid (ARPA), radiotelephone, Automatic Identification System equipment, navigational lighting, sound signaling devices or similar equipment.

(2) Any condition on board the vessel likely to impair navigation, such as lack of current nautical charts and publications, personnel shortage, or similar condition.

(3) Vessel characteristics that affect or restrict maneuverability, such as cargo or tow arrangement, trim, loaded condition, underkeel or overhead clearance, speed capabilities, power availability, or similar characteristics, which may affect the positive control or safe handling of the vessel or the tow.

Navigable waters means all navigable waters of the United States including the territorial sea of the United States, extending to 12 nautical miles from United States baselines, as described in Presidential Proclamation No. 5928 of December 27, 1988.

Precautionary Area means a routing measure comprising an area within defined limits where vessels must navigate with particular caution and within which the direction of traffic may be recommended.

Towing Vessel means any commercial vessel engaged in towing another vessel astern, alongside, or by pushing ahead.

Vessel Movement Center (VMC) means the shore-based facility that operates the vessel tracking system for a Vessel Movement Reporting System (VMRS) area or sector within such an area. The VMC does not necessarily have the capability or qualified personnel to interact with marine traffic, nor does it necessarily respond to traffic situations developing in the area, as does a Vessel Traffic Service (VTS).

Vessel Movement Reporting System (VMRS) means a mandatory reporting system used to monitor and track vessel movements. This is accomplished by a vessel providing information under established procedures as set forth in this part in the areas defined in Table 161.12(c) (VTS and VMRS Centers, Call Signs/MMSI, Designated Frequencies, and Monitoring Areas).

Vessel Movement Reporting System (VMRS) User means a vessel, or an owner, operator, charterer, Master, or person directing the movement of a vessel that is required to participate in a VMRS.

Vessel Traffic Center (VTC) means the shore-based facility that operates the vessel traffic service for the Vessel Traffic Service area or sector within such an area.

Vessel Traffic Services (VTS) means a service implemented by the United States Coast Guard designed to improve the safety and efficiency of vessel traffic and to protect the environment. The VTS has the capability to interact with marine traffic and respond to traffic situations developing in the VTS area.

Vessel Traffic Service Area or *VTS Area* means the geographical area encompassing a specific VTS area of service. This area of service may be subdivided into sectors for the purpose of allocating responsibility to individual Vessel Traffic Centers or to identify different operating requirements.

NOTE: Although regulatory jurisdiction is limited to the navigable waters of the United States, certain vessels will be encouraged or may be required, as a condition of port entry, to report beyond this area to facilitate traffic management within the VTS area.

VTS Special Area means a waterway within a VTS area in which special operating requirements apply.

VTS User means a vessel, or an owner, operator, charterer, master, or person directing the movement of a vessel, that is:

(a) Subject to the Vessel Bridge-to-Bridge Radiotelephone Act; or

(b) Required to participate in a VMRS within a VTS area (VMRS User).

VTS User's Manual means the manual established and distributed by the VTS to provide the mariner with a description of the services offered and rules in force for that VTS. Additionally, the manual may include chartlets showing

the area and sector boundaries, general navigational information about the area, and procedures, radio frequencies, reporting provisions and other information which may assist the mariner while in the VTS area.

[CGD 90–020, 59 FR 36324, July 15, 1994, as amended by CGE 97–023, 62 FR 33364, June 19, 1997; USCG–2003–14757, 68 FR 39364, July 1, 2003; USCG–1998–4399, 75 FR 66314, Oct. 28, 2010]

§ 161.3 Applicability.

The provisions of this subpart shall apply to each VTS User and may also apply to any vessel while underway or at anchor on the navigable waters of the United States within a VTS area, to the extent the VTS considers necessary.

§ 161.4 Requirement to carry the rules.

Each VTS User shall carry on board and maintain for ready reference a copy of these rules.

NOTE: These rules are contained in the applicable U.S. Coast Pilot, the VTS User's Manual which may be obtained by contacting the appropriate VTS, and periodically published in the Local Notice to Mariners. The VTS User's Manual and the World VTS Guide, an International Maritime Organization (IMO) recognized publication, contain additional information which may assist the prudent mariner while in the appropriate VTS area.

§ 161.5 Deviations from the rules.

(a) Requests to deviate from any provision in this part, either for an extended period of time or if anticipated before the start of a transit, must be submitted in writing to the appropriate District Commander. Upon receipt of the written request, the District Commander may authorize a deviation if it is determined that such a deviation provides a level of safety equivalent to that provided by the required measure or is a maneuver considered necessary for safe navigation under the circumstances. An application for an authorized deviation must state the need and fully describe the proposed alternative to the required measure.

(b) Requests to deviate from any provision in this part due to circumstances that develop during a transit or immediately preceding a transit, may be made verbally to the appropriate VTS Director. Requests to deviate shall be made as far in advance as practicable. Upon receipt of the request, the VTS Director may authorize a deviation if it is determined that, based on vessel handling characteristics, traffic density, radar contacts, environmental conditions and other relevant information, such a deviation provides a level of safety equivalent to that provided by the required measure or is a maneuver considered necessary for safe navigation under the circumstances.

[CGD 90–020, 59 FR 36324, July 15, 1994, as amended by USCG–2005–21531, 70 FR 36350, June 23, 2005]

§ 161.6 Preemption.

The regulations in this part have preemptive impact over State laws or regulations on the same subject matter. The Coast Guard has determined, after considering the factors developed by the Supreme Court in *U.S.* v. *Locke*, 529 U.S. 89 (2000), that by enacting Chapter 25 of the Ports and Waterways Safety Act (33 U.S.C. 1221 *et seq.*), Congress intended that Coast Guard regulations preempt State laws or regulations regarding vessel traffic services in United States ports and waterways.

[USCG–1998–4399, 75 FR 66314, Oct. 28, 2010]

SERVICES, VTS MEASURES, AND OPERATING REQUIREMENTS

§ 161.10 Services.

To enhance navigation and vessel safety, and to protect the marine environment, a VTS may issue advisories, or respond to vessel requests for information, on reported conditions within the VTS area, such as:

(a) Hazardous conditions or circumstances;

(b) Vessel congestion;

(c) Traffic density;

(d) Environmental conditions;

(e) Aids to navigation status;

(f) Anticipated vessel encounters;

(g) Another vessel's name, type, position, hazardous vessel operating conditions, if applicable, and intended navigation movements, as reported;

(h) Temporary measures in effect;

(i) A description of local harbor operations and conditions, such as ferry routes, dredging, and so forth;

(j) Anchorage availability; or

(k) Other information or special circumstances.

§ 161.11 VTS measures.

(a) A VTS may issue measures or directions to enhance navigation and vessel safety and to protect the marine environment, such as, but not limited to:

(1) Designating temporary reporting points and procedures;

(2) Imposing vessel operating requirements; or

(3) Establishing vessel traffic routing schemes.

(b) During conditions of vessel congestion, restricted visibility, adverse weather, or other hazardous circumstances, a VTS may control, supervise, or otherwise manage traffic, by specifying times of entry, movement, or departure to, from, or within a VTS area.

§ 161.12 Vessel operating requirements.

(a) Subject to the exigencies of safe navigation, a VTS User shall comply with all measures established or directions issued by a VTS.

(b) If, in a specific circumstance, a VTS User is unable to safely comply with a measure or direction issued by the VTS, the VTS User may deviate only to the extent necessary to avoid endangering persons, property or the environment. The deviation shall be reported to the VTS as soon as is practicable.

(c) When not exchanging voice communications, a VTS User must maintain a listening watch as required by § 26.04(e) of this chapter on the VTS frequency designated in Table 161.12(c) (VTS and VMRS Centers, Call Signs/MMSI, Designated Frequencies, and Monitoring Areas). In addition, the VTS User must respond promptly when hailed and communicate in the English language.

NOTE TO § 161.12(c): As stated in 47 CFR 80.148(b), a very high frequency watch on Channel 16 (156.800 MHz) is not required on vessels subject to the Vessel Bridge-to-Bridge Radiotelephone Act and participating in a Vessel Traffic Service (VTS) system when the watch is maintained on both the vessel bridge-to-bridge frequency and a designated VTS frequency.

TABLE 161.12(c)—VTS AND VMRS CENTERS, CALL SIGNS/MMSI, DESIGNATED FREQUENCIES, AND MONITORING AREAS

Center MMSI [1] Call Sign	Designated frequency (Channel designation)—purpose [2]	Monitoring Area [3] [4]
Berwick Bay—003669950:		
Berwick Traffic	156.550 MHz (Ch. 11)	The waters south of 29°45.00′ N., west of 91°10.00′ W., north of 29°37.00′ N., and east of 91°18.00′ W.
Buzzards Bay:		
Buzzards Bay Control [5]	156.600 MHz (Ch. 12)	The waters east and north of a line drawn from the southern tangent of Sakonnet Point, Rhode Island, in approximate position latitude 41°27.20′ N., longitude 70°11.70′ W., to the Buzzards Bay Entrance Light in approximate position latitude 41°23.50′ N., longitude 71°02.00′ W., and then to the southwestern tangent of Cuttyhunk Island, Massachusetts, at approximate position latitude 41°24.60′ N., longitude 70°57.00′ W., and including all of the Cape Cod Canal to its eastern entrance, except that the area of New Bedford harbor within the confines (north of) the hurricane barrier, and the passages through the Elizabeth Islands, is not considered to be "Buzzards Bay".
Houston-Galveston—003669954		The navigable waters north of 29°00.00′ N., west of 94°20.00′ W., south of 29°49.00′ N., and east of 95°20.00′ W.
Houston Traffic	156.550 MHz (Ch. 11) 156.250 MHz (Ch. 5A). —For Sailing Plans only.	The navigable waters north of a line extending due west from the southernmost end of Exxon Dock #1 (20°43.37′ N., 95°01.27′ W.).
Houston Traffic	156.600 MHz (Ch. 12) 156.250 MHz (Ch. 5A). —For Sailing Plans only.	The navigable waters south of a line extending due west from the southernmost end of Exxon Dock #1 (29°43.37′ N., 95°01.27′ W.).

TABLE 161.12(c)—VTS AND VMRS CENTERS, CALL SIGNS/MMSI, DESIGNATED FREQUENCIES, AND MONITORING AREAS—Continued

Center MMSI [1] Call Sign	Designated frequency (Channel designation)—purpose [2]	Monitoring Area [3] [4]
Los Angeles-Long Beach—03660465:		
San Pedro Traffic	156.700 MHz (Ch. 14)	*Vessel Movement Reporting System Area:* The navigable waters within a 25 nautical mile radius of Point Fermin Light (33°42.30′ N., 118°17.60′ W.).
Louisville—003669732:		
Louisville Traffic	156.650 MHz (Ch. 13)	The waters of the Ohio River between McAlpine Locks (Mile 606) and Twelve Mile Island (Mile 593), only when the McAlpine upper pool gauge is at approximately 13.0 feet or above.
Lower Mississippi River—0036699952:		
New Orleans Traffic	156.550 MHz (Ch. 11)	The navigable waters of the Lower Mississippi River below 29°55.30′ N., 89°55.60′ W. (Saxonholm Light) at 86.0 miles Above Head of Passes (AHP), extending down river to Southwest Pass, and, within a 12 nautical mile radius around 28°54.30′ N., 89°25.70′ W. (Southwest Pass Entrance Light) at 20.1 miles Below Head of Passes.
New Orleans Traffic	156.600 MHz (Ch. 12)	The navigable waters of the Lower Mississippi River bounded on the north by a line drawn perpendicular on the river at 29°55.50′ N., 90°12.77′ W. (Upper Twelve Mile Point) at 109.0 miles AHP and on the south by a line drawn perpendicularly at 29°55.30′ N., 89°55.60′ W. (Saxonholm Light) at 86.0 miles AHP.
New Orleans Traffic	156.250 MHz (Ch. 05A)	The navigable waters of the Lower Mississippi River below 30°38.70′ N., 91°17.50′ W. (Port Hudson Light) at 254.5 miles AHP bounded on the south by a line drawn perpendicular on the river at 29°55.50′ N., 90°12.77′ W. (Upper Twelve Mile Point) at 109.0 miles AHP.
New York—003669951:		
New York Traffic	156.550 MHz (Ch. 11)—For Sailing Plans only. 156.600 MHz (Ch. 12).—For vessels at anchor.	The area consists of the navigable waters of the Lower New York Bay bounded on the east by a line drawn from Norton Point to Breezy Point; on the south by a line connecting the entrance buoys at the Ambrose Channel, Swash Channel, and Sandy Hook Channel to Sandy Hook Point; and on the southeast including the waters of Sandy Hook Bay south to a line drawn at latitude 40°25.00′ N.; then west in the Raritan Bay to the Raritan River Railroad Bridge, then north into waters of the Arthur Kill and Newark Bay to the Lehigh Valley Draw Bridge at latitude 40°41.90′ N.; and then east including the waters of the Kill Van Kull and the Upper New York Bay north to a line drawn east-west from the Holland Tunnel ventilator shaft at latitude 40°43.70′ N., longitude 74°01.60′ W., in the Hudson River; and then continuing east including the waters of the East River to the Throgs Neck Bridge, excluding the Harlem River.
New York Traffic	156.700 MHz (Ch. 14)	The navigable waters of the Lower New York Bay west of a line drawn from Norton Point to Breezy Point; and north of a line connecting the entrance buoys of Ambrose Channel, Swash Channel, and Sandy Hook Channel, to Sandy Hook Point; on the southeast including the waters of the Sandy Hook Bay south to a line drawn at latitude 40°25.00′ N.; then west into the waters of Raritan Bay East Reach to a line drawn from Great Kills Light south through Raritan Bay East Reach LGB #14 to Comfort PT, NJ; then north including the waters of the Upper New York Bay south of 40°42.40′ N. (Brooklyn Bridge) and 40°43.70′ N. (Holland Tunnel Ventilator Shaft); west through the KVK into the Arthur Kill north of 40°38.25′ N. (Arthur Kill Railroad Bridge); then north into the waters of the Newark Bay, south of 40°41.95′ N. (Lehigh Valley Draw Bridge).
New York Traffic	156.600 MHz (Ch. 12)	The navigable waters of the Raritan Bay south to a line drawn at latitude 40°26.00′ N.; then west of a line drawn from Great Kills Light south through the Raritan Bay East Reach LGB #14 to Point Comfort, NJ; then west to the Raritan River Railroad Bridge; and north including the waters of the Arthur Kill to 40°28.25′ N. (Arthur Kill Railroad Bridge); including the waters of the East River north of 40°42.40′ N. (Brooklyn Bridge) to the Throgs Neck Bridge, excluding the Harlem River.
Port Arthur—003669955:		

TABLE 161.12(c)—VTS AND VMRS CENTERS, CALL SIGNS/MMSI, DESIGNATED FREQUENCIES, AND MONITORING AREAS—Continued

Center MMSI [1] Call Sign	Designated frequency (Channel designation)—purpose [2]	Monitoring Area [3] [4]
Port Arthur Traffic	156.050 MHz (Ch. 01A)	The navigable waters of the Sabine-Neches Canal south of 29°52.70′ N.; Port Arthur Canal; Sabine Pass Channel; Sabine Bank Channel; Sabine Outer Bar Channel; the offshore safety fairway; and the ICW from High Island to its intersection with the Sabine-Neches Canal.
Port Arthur Traffic	156.275 MHz (Ch. 65A)	The navigable waters of the Neches River; Sabine River; and Sabine-Neches Waterway north of 29°52.70′ N.; and the ICW from its intersection with the Sabine River to MM 260.
Port Arthur Traffic	156.675 MHz (Ch. 73) [6]	The navigable waters of the Calcasieu Channel; Calcasieu River Channel; and the ICW from MM 260 to MM 191.
Prince William Sound—003669958:		
Valdez Traffic	156.650 MHz (CH. 13)	The navigable waters south of 61°05.00′ N., east of 147°20.00′ W., north of 60°00.00′ N., and west of 146°30.00′ W.; and, all navigable waters in Port Valdez.
Puget Sound: [7]		
Seattle Traffic—003669957.	156.700 MHz (Ch. 14)	The waters of Puget Sound, Hood Canal and adjacent waters south of a line connecting Nodule Point and Bush Point in Admiralty Inlet and south of a line drawn due east from the southernmost tip of Possession Point on Whidbey Island to the shoreline.
Seattle Traffic—003669957.	156.250 MHz (Ch. 5A)	The waters of the Strait of Juan de Fuca east of 124°40.00′ W. excluding the waters in the central portion of the Strait of Juan de Fuca north and east of Race Rocks; the navigable waters of the Strait of Georgia east of 122°52.00′ W.; the San Juan Island Archipelago, Rosario Strait, Bellingham Bay; Admiralty Inlet north of a line connecting Nodule Point and Bush Point and all waters east of Whidbey Island north of a line drawn due east from the southernmost tip of Possession Point on Whidbey Island to the shoreline.
Tofino Traffic—003160012.	156.725 MHz (Ch. 74)	The waters west of 124°40.00′ W. within 50 nautical miles of the coast of Vancouver Island including the waters north of 48°00.00′ N., and east of 127°00.00′ W.
Victoria Traffic—003160010.	156.550 MHz (Ch. 11)	The waters of the Strait of Georgia west of 122°52.00′ W., the navigable waters of the central Strait of Juan de Fuca north and east of Race Rocks, including the Gulf Island Archipelago, Boundary Pass and Haro Strait.
San Francisco—003669956:		
San Francisco Traffic	156.700 MHz (Ch. 14)	The navigable waters of the San Francisco Offshore Precautionary Area, the navigable waters shoreward of the San Francisco Offshore Precautionary Area east of 122°42.00′ W. and north of 37°40.00′ N. extending eastward through the Golden Gate, and the navigable waters of San Francisco Bay and as far east as the port of Stockton on the San Joaquin River, as far north as the port of Sacramento on the Sacramento River.
San Francisco Traffic	156.600 MHz (Ch. 12)	The navigable waters within a 38 nautical mile radius of Mount Tamalpais (37°55.80′ N., 122°34.60′ W.) west of 122°42.00′ W. and south of 37°40.00′ N. and excluding the San Francisco Offshore Precautionary Area.
St. Mary's River—003669953:		
Soo Traffic	156.600 MHz (Ch. 12)	The waters of the St. Mary's River and lower Whitefish Bay from 45°57.00′ N. (De Tour Reef Light) to the south, to 46°38.70′ N. (Ile Parisienne Light) to the north, except the waters of the St. Mary's Falls Canal and to the east along a line from La Pointe to Sims Point, within Potagannissing Bay and Worsley Bay.

NOTES:

[1] Maritime Mobile Service Identifier (MMSI) is a unique nine-digit number assigned that identifies ship stations, ship earth stations, coast stations, coast earth stations, and group calls for use by a digital selective calling (DSC) radio, an INMARSAT ship earth station or AIS. AIS requirements are set forth in §§ 161.21 and 164.46 of this subchapter. The requirements set forth in §§ 161.21 and 164.46 of this subchapter apply in those areas denoted with an MMSI number, except for Louisville and Los Angeles/Long Beach.

[2] In the event of a communication failure, difficulties or other safety factors, the Center may direct or permit a user to monitor and report on any other designated monitoring frequency or the bridge-to-bridge navigational frequency, 156.650 MHz (Channel 13) or 156.375 MHz (Channel 67), to the extent that doing so provides a level of safety beyond that provided by other means. The bridge-to-bridge navigational frequency, 156.650 MHz (Ch. 13) is used in certain monitoring areas where the level of reporting does not warrant a designated frequency.

[3] All geographic coordinates (latitude and longitude) are expressed in North American Datum of 1983 (NAD 83).

[4] Some monitoring areas extend beyond navigable waters. Although not required, users are strongly encouraged to maintain a listening watch on the designated monitoring frequency in these areas. Otherwise, they are required to maintain watch as stated in 47 CFR 80.148.

[5] In addition to the vessels denoted in Section 161.16 of this chapter, requirements set forth in subpart B of 33 CFR part 161 also apply to any vessel transiting VMRS Buzzards Bay required to carry a bridge-to-bridge radiotelephone by part 26 of this chapter.

[6] Until otherwise directed, full VTS services will not be available in the Calcasieu Channel, Calcasieu River Channel, and the ICW from MM 260 to MM 191. Vessels may contact Port Arthur Traffic on the designated VTS frequency to request advisories, but are not required to monitor the VTS frequency in this sector.

[7] A Cooperative Vessel Traffic Service was established by the United States and Canada within adjoining waters. The appropriate Center administers the rules issued by both nations; however, enforces only its own set of rules within its jurisdiction. Note, the bridge-to-bridge navigational frequency, 156.650 MHz (Ch. 13), is not so designated in Canadian waters, therefore users are encouraged and permitted to make passing arrangements on the designated monitoring frequencies.

(d) As soon as is practicable, a VTS User shall notify the VTS of any of the following:

(1) A marine casualty as defined in 46 CFR 4.05–1;

(2) Involvement in the ramming of a fixed or floating object;

(3) A pollution incident as defined in § 151.15 of this chapter;

(4) A defect or discrepancy in an aid to navigation;

(5) A hazardous condition as defined in § 160.203 of this chapter;

(6) Improper operation of vessel equipment required by part 164 of this chapter;

(7) A situation involving hazardous materials for which a report is required by 49 CFR 176.48; and

(8) A hazardous vessel operating condition as defined in § 161.2.

[CGD 90–020, 59 FR 36324, July 15, 1994]

EDITORIAL NOTE: For FEDERAL REGISTER citations affecting § 161.12, see the List of CFR Sections Affected, which appears in the Finding Aids section of the printed volume and at www.fdsys.gov.

§ 161.13 VTS Special Area operating requirements.

The following operating requirements apply within a VTS Special Area:

(a) A VTS User shall, if towing astern, do so with as short a hawser as safety and good seamanship permits.

(b) A VMRS User shall: (1) Not enter or get underway in the area without prior approval of the VTS;

(2) Not enter a VTS Special Area if a hazardous vessel operating condition or circumstance exists;

(3) Not meet, cross, or overtake any other VMRS User in the area without prior approval of the VTS; and

(4) Before meeting, crossing, or overtaking any other VMRS User in the area, communicate on the designated vessel bridge-to-bridge radiotelephone frequency, intended navigation movements, and any other information necessary in order to make safe passing arrangements. This requirement does not relieve a vessel of any duty prescribed by the International Regulations for Prevention of Collisions at Sea, 1972 (72 COLREGS) or the Inland Navigation Rules.

Subpart B—Vessel Movement Reporting System

§ 161.15 Purpose and intent.

(a) A Vessel Movement Reporting System (VMRS) is a system used to monitor and track vessel movements within a VTS or VMRS area. This is accomplished by requiring that vessels provide information under established procedures as set forth in this part, or as directed by the Center.

(b) To avoid imposing an undue reporting burden or unduly congesting radiotelephone frequencies, reports shall be limited to information which is essential to achieve the objectives of the VMRS. These reports are consolidated into three reports (sailing plan, position, and final).

[CGD 90–020, 59 FR 36324, July 15, 1994, as amended by USCG–2003–14757, 68 FR 39366, July 1, 2003; USCG–2011–0257, 76 FR 31838, June 2, 2011]

§ 161.16 Applicability.

Unless otherwise stated, the provisions of this subpart apply to the following vessels and VMRS Users:

(a) Every power-driven vessel of 40 meters (approximately 131 feet) or more in length, while navigating;

(b) Every towing vessel of 8 meters (approximately 26 feet) or more in length, while navigating; or

(c) Every vessel certificated to carry 50 or more passengers for hire, when engaged in trade.

[CGD 90–020, 59 FR 36324, July 15, 1994, as amended by USCG–2003–14757, 68 FR 39366, July 1, 2003]

§ 161.17 Definitions.

As used in this subpart:

Center means a Vessel Traffic Center or Vessel Movement Center.

Published means available in a widely-distributed and publicly available medium (e.g., VTS User's Manual, ferry schedule, Notice to Mariners).

[USCG–2003–14757, 68 FR 39366, July 1, 2003]

§ 161.18 Reporting requirements.

(a) A Center may: (1) Direct a vessel to provide any of the information set forth in Table 161.18(a) (IMO Standard Ship Reporting System);

TABLE 161.18(a)—THE IMO STANDARD SHIP REPORTING SYSTEM

A	ALPHA	Ship	Name, call sign or ship station identity, and flag.
B	BRAVO	Dates and time of event	A 6 digit group giving day of month (first two digits), hours and minutes (last four digits). If other than UTC state time zone used.
C	CHARLIE	Position	A 4 digit group giving latitude in degrees and minutes suffixed with N (north) or S (south) and a 5 digit group giving longitude in degrees and minutes suffixed with E (east) or W (west); or.
D	DELTA	Position	True bearing (first 3 digits) and distance (state distance) in nautical miles from a clearly identified landmark (state landmark).
E	ECHO	True course	A 3 digit group.
F	FOXTROT	Speed in knots and tenths of knots.	A 3 digit group.
G	GOLF	Port of Departure	Name of last port of call.
H	HOTEL	Date, time and point of entry system.	Entry time expressed as in (B) and into the entry position expressed as in (C) or (D).
I	INDIA	Destination and expected time of arrival.	Name of port and date time group expressed as in (B).
J	JULIET	Pilot	State whether a deep sea or local pilot is on board.
K	KILO	Date, time and point of exit from system.	Exit time expressed as in (B) and exit position expressed as in (C) or (D).
L	LIMA	Route information	Intended track.
M	MIKE	Radio	State in full names of communications stations/frequencies guarded.
N	NOVEMBER	Time of next report	Date time group expressed as in (B).
O	OSCAR	Maximum present static draught in meters.	4 digit group giving meters and centimeters.
P	PAPA	Cargo on board	Cargo and brief details of any dangerous cargoes as well as harmful substances and gases that could endanger persons or the environment.
Q	QUEBEC	Defects, damage, deficiencies or limitations.	Brief detail of defects, damage, deficiencies or other limitations.
R	ROMEO	Description of pollution or dangerous goods lost.	Brief details of type of pollution (oil, chemicals, etc) or dangerous goods lost overboard; position expressed as in (C) or (D).
S	SIERRA	Weather conditions	Brief details of weather and sea conditions prevailing.
T	TANGO	Ship's representative and/or owner.	Details of name and particulars of ship's representative and/or owner for provision of information.
U	UNIFORM	Ship size and type	Details of length, breadth, tonnage, and type, etc., as required.
V	VICTOR	Medical personnel	Doctor, physician's assistant, nurse, no medic.
W	WHISKEY	Total number of persons on board.	State number.

TABLE 161.18(a)—THE IMO STANDARD SHIP REPORTING SYSTEM—Continued

X	XRAY	Miscellaneous	Any other information as appropriate. [*i.e.*, a detailed description of a planned operation, which may include: its duration; effective area; any restrictions to navigation; notification procedures for approaching vessels; in addition, for a towing operation: configuration, length of the tow, available horsepower, etc.; for a dredge or floating plant: configuration of pipeline, mooring configuration, number of assist vessels, etc.].

(2) Establish other means of reporting for those vessels unable to report on the designated frequency; or

(3) Require reports from a vessel in sufficient time to allow advance vessel traffic planning.

(b) All reports required by this part shall be made as soon as is practicable on the frequency designated in Table 161.12(c) (VTS and VMRS Centers, Call Signs/MMSI, Designated Frequencies, and Monitoring Areas).

(c) When not exchanging communications, a VMRS User must maintain a listening watch as described in § 26.04(e) of this chapter on the frequency designated in Table 161.12(c) (VTS and VMRS Centers, Call Signs/MMSI, Designated Frequencies, and Monitoring Areas). In addition, the VMRS User must respond promptly when hailed and communicate in the English language.

NOTE: As stated in 47 CFR 80.148(b), a VHF watch on Channel 16 (156.800 MHz) is not required on vessels subject to the Vessel Bridge-to-Bridge Radiotelephone Act and participating in a Vessel Traffic Service (VTS) system when the watch is maintained on both the vessel bridge-to-bridge frequency and a designated VTS frequency.

(d) A vessel must report:

(1) Any significant deviation from its Sailing Plan, as defined in § 161.19, or from previously reported information; or

(2) Any intention to deviate from a VTS issued measure or vessel traffic routing system.

(e) When reports required by this part include time information, such information shall be given using the local time zone in effect and the 24-hour military clock system.

[CGD 90–020, 59 FR 36324, July 15, 1994, as amended by USCG–2003–14757, 68 FR 39366, July 1, 2003]

§ 161.19 Sailing Plan (SP).

Unless otherwise stated, at least 15 minutes before navigating a VTS area, a vessel must report the:

(a) Vessel name and type;

(b) Position;

(c) Destination and ETA;

(d) Intended route;

(e) Time and point of entry; and

(f) Certain dangerous cargo on board or in its tow, as defined in § 160.204 of this subchapter.

[CGD 90–020, 59 FR 36324, July 15, 1994, as amended by USCG–2011–1024, 78 FR 51671, Aug. 21, 2013]

§ 161.20 Position Report (PR).

A vessel must report its name and position:

(a) Upon point of entry into a VMRS area;

(b) At designated reporting points as set forth in subpart C; or

(c) When directed by the Center.

[CGD 90–020, 59 FR 36324, July 15, 1994, as amended by USCG–2003–14757, 68 FR 39366, July 1, 2003]

§ 161.21 Automated reporting.

(a) Unless otherwise directed, vessels equipped with an Automatic Identification System (AIS) are required to make continuous, all stations, AIS broadcasts, in lieu of voice Position Reports, to those Centers denoted in Table 161.12(c) of this part.

(b) Should an AIS become non-operational, while or prior to navigating a

VMRS area, it should be restored to operating condition as soon as possible, and, until restored a vessel must:

(1) Notify the Center;

(2) Make voice radio Position Reports at designated reporting points as required by § 161.20(b) of this part; and

(3) Make any other reports as directed by the Center.

[USCG–2003–14757, 68 FR 39366, July 1, 2003]

§ 161.22 Final Report (FR).

A vessel must report its name and position:

(a) On arrival at its destination; or

(b) When leaving a VTS area.

§ 161.23 Reporting exemptions.

(a) Unless otherwise directed, the following vessels are exempted from providing Position and Final Reports due to the nature of their operation:

(1) Vessels on a published schedule and route;

(2) Vessels operating within an area of a radius of three nautical miles or less; or

(3) Vessels escorting another vessel or assisting another vessel in maneuvering procedures.

(b) A vessel described in paragraph (a) of this section must:

(1) Provide a Sailing Plan at least 5 minutes but not more than 15 minutes before navigating within the VMRS area; and

(2) If it departs from its promulgated schedule by more than 15 minutes or changes its limited operating area, make the established VMRS reports, or report as directed.

[CGD 90–020, 59 FR 36324, July 15, 1994, as amended by CGD 97–023, 62 FR 33364, June 19, 1997; USCG–2003–14757, 68 FR 39367, July 1, 2003]

Subpart C—Vessel Traffic Service and Vessel Movement Reporting System Areas and Reporting Points

NOTE: All geographic coordinates contained in part 161 (latitude and longitude) are expressed in North American Datum of 1983 (NAD 83).

§ 161.25 Vessel Traffic Service New York Area.

The area consists of the navigable waters of the Lower New York Harbor bounded on the east by a line drawn from Norton Point to Breezy Point; on the south by a line connecting the entrance buoys at the Ambrose Channel, Swash Channel, and Sandy Hook Channel to Sandy Hook Point; and on the southeast including the waters of Sandy Hook Bay south to a line drawn at latitude 40°25′ N.; then west into waters of the Raritan Bay to the Raritan River Rail Road Bridge; and then north including the waters of the Arthur Kill and Newark Bay to the Lehigh Valley Draw Bridge at latitude 40°41.9′ N.; and then east including the waters of the Kill Van Kull and Upper New York Bay north to a line drawn east-west from the Holland Tunnel Ventilator Shaft at latitude 40°43.7′ N., longitude 74°01.6′ W. in the Hudson River; and then continuing east including the waters of the East River to the Throgs Neck Bridge, excluding the Harlem River.

NOTE: Although mandatory participation in VTSNY is limited to the area within the navigable waters of the United States, VTSNY will provide services beyond those waters. Prospective users are encouraged to report beyond the area of required participation in order to facilitate advance vessel traffic management in the VTS area and to receive VTSNY advisories and/or assistance.

[CGD 92–052, 61 FR 45327, Aug. 29, 1996]

§ 161.30 Vessel Traffic Service Louisville.

The VTS area consists of the navigable waters of the Ohio River between McAlpine Locks (Mile 606.8) and Twelve Mile Island (Mile 593), only when the McAlpine upper pool gauge is at 13.0 feet or above.

[CGD 90–020, 59 FR 36324, July 15, 1994, as amended by USCG–1998–3799, 63 FR 35531, June 30, 1998]

§ 161.35 Vessel Traffic Service Houston/Galveston.

(a) The VTS area consists of the following major waterways and portions of connecting waterways: Galveston Bay Entrance Channel; Outer Bar Channel; Inner Bar Channel; Bolivar Roads Channel; Galveston Channel;

Gulf ICW and Galveston-Freeport Cut-Off from Mile 346 to Mile 352; Texas City Channel; Texas City Turning Basin; Texas City Canal Channel; Texas City Canal Turning Basin; Houston Ship Channel; Bayport Channel; Bayport Turning Basin; Houston Turning Basin; and the following precautionary areas associated with these waterways.

(b) *Precautionary areas.*

TABLE 161.35(b)—VTS HOUSTON/GALVESTON PRECAUTIONARY AREAS

Precautionary area name	Radius (yds.)	Center point	
		Latitude	Longitude
Bolivar Roads	4000	29°20.9′ N	94°47.0′ W
Red Fish Bar	4000	29°29.8′ N	94°51.9′ W
Bayport Channel.	4000	29°36.7′ N	94°57.2′ W

TABLE 161.35(b)—VTS HOUSTON/GALVESTON PRECAUTIONARY AREAS—Continued

Precautionary area name	Radius (yds.)	Center point	
		Latitude	Longitude
Morgans Point	2000	29°41.0′ N	94°59.0′ W
Upper San Jacinto Bay.	1000	29°42.3′ N	95°01.1′ W
Baytown	1000	29°43.6′ N	95°01.4′ W
Lynchburg	1000	29°45.8′ N	95°04.8′ W
Carpenters Bayou.	1000	29°45.3′ N	95°05.6′ W
Jacintoport	1000	29°44.8′ N	95°06.0′ W
Greens Bayou	1000	29°44.8′ N	95°10.2′ W
Hunting Bayou	1000	29°44.3′ N	95°12.1′ W
Sims Bayou	1000	29°43.2′ N	95°14.4′ W
Brady Island	1000	29°43.5′ N	95°16.4′ W
Buffalo Bayou	1000	29°45.0′ N	95°17.3′ W

NOTE: Each Precautionary Area encompasses a circular area of the radius denoted.

(c) *Reporting points.*

TABLE 161.35(c)—VTS HOUSTON/GALVESTON REPORTING POINTS

Designator	Geographic name	Geographic description	Latitude/ longitude	Notes
1	Galveston Bay Entrance Channel.	Galveston Bay Entrance CH Lighted Buoy (LB) "1C".	29°18.2′ N; 94°37.6′ W	
2	Galveston Bay Entrance Channel.	Galveston Bay Entrance Channel LB 11 and 12.	29°20.6′ N; 94°44.6′ W	
E	Bolivar Land Cut	Mile 349 Intracoastal Waterway (ICW).	29°22.5′ N; 94°46.9′ W	Tows entering HSC also report at HSC LB 25 & 26.
W	Pelican Cut	Mile 351 ICW	29°21.4′ N; 94°48.5′ W	Tows entering HSC also report at HSC LB 25 & 26.
G	Galveston Harbor	Galveston Channel Lt. 2	29°20.2′ N; 94°46.6′ W	Coast Guard Base.
T	Texas City Channel	Texas City Channel Lt. 12	29°22.4′ N; 94°50.9′ W	
X	Houston Ship Channel ICW Intersection.	Houston Ship Channel (HSC) LB 25 and 26.	29°22.2′ N; 94°48.1′ W	Tow entering HSC from ICW or Texas Cut Only.
3	Lower Galveston Bay	HSC Lt. 31 and LB 32	29°23.8′ N; 94°48.9′ W	
4	Red Fish Bar	HSC Lt. 53 & 54	29°30.3′ N; 94°52.4′ W	
P	Bayport Ship Channel	Bayport Ship Channel Lt. 8 and 9.	29°36.8′ N; 94°59.5′ W	Bayport Land Cut.
4A	Upper Galveston Bay	HSC Lt. 69 and 70	29°34.7′ N; 94°55.8′ W	Tows only.
5	Morgan's Point	HSC Lt. 91	29°41.0′ N; 94°59.0′ W	
6	Exxon	HSC Lt. 109A	29°43.5′ N; 95°01.4′ W	
7	Lynchburg	Ferry crossing	29°45.8′ N; 95°04.8′ W	
8	Shell Oil	Boggy Bayou	29°44.1′ N; 95°08.0′ W	
9	Greens Bayou	HSC Lt. 152	29°44.8′ N; 95°10.1′ W	
10	Hunting Bayou	Hunting Bayou Turning Basin.	29°44.4′ N; 95°12.1′ W	
11	Lyondell	Sims Bayou Turning Basin.	29°43.2′ N; 95°14.4′ W	
12	I–610 Bridge	I–610 Bridge	29°43.5′ N; 95°16.0′ W	
13	Buffalo Bayou	Houston Turning Basin	29°45.0′ N; 95° 17.4′ W	

[CGD 90–020, 59 FR 36324, July 15, 1994, as amended by CGD 95–033, 60 FR 28331, May 31, 1995; USCG–2000–7223, 65 FR 40058, June 29, 2000; USCG–2007–27887, 72 FR 45904, Aug. 16, 2007]

§ 161.40 Vessel Traffic Service Berwick Bay.

(a) The VTS area consists of the navigable waters of the following segments of waterways: the Intracoastal Waterway (ICW) Morgan City to Port Allen Alternate Route from Mile Marker 0 to Mile Marker 5; the ICW from Mile Marker 93 west of Harvey Lock (WHL) to Mile Marker 102 WHL; the Atchafalaya River Route from Mile Marker 113 to Mile Marker 122; from

Bayou Shaffer Junction (ICW Mile Marker 94.5 WHL) south one statute mile along Bayou Shaffer; and from Berwick Lock northwest one statute mile along the Lower Atchafalaya River.

(b) *VTS Special Area.* The Berwick Bay VTS Special Area consists of those waters within a 1000 yard radius of the Burlington Northern/Santa Fe Railroad Bridge located at Mile .03 MC/PA.

(c) *Reporting Points.*

TABLE 161.40(c)—VTS BERWICK BAY REPORTING POINTS

Designator	Geographic name	Geographic description	Latitude/longitude	Notes
1	Stouts Pass	Stouts Point Light "1" Mile 113–Atchafalaya River.	29°43′47″ N 91°13′25″ W	
2	Berwick Lock	Mile 1.9 MC/PA	29°43′10″ N 91°13′28″ W	If transiting the Lock.
3	Conrad's Point Junction	Buoy "1" Mile 1.5 MC/PA	29°42′32″ N 91°13′14″ W	
4	Swift Ships Flat Lake Junction.	Mile 3 MC/PA	29°43′26″ N 91°12′22″ W	
5	Burlington Northern/Santa Fe Railroad Bridge.	Mile 0.3 MC/PA	29°41′34″ N 91°12′44″ W	
6	20 Grant Point Junction	Bayou Boeuf-Atchafalaya R. Mile 95.5 ICW.	29°41′18″ N 91°12′36″ W	
7	ICW	Overhead Power Cable Mile 96.5 ICW.	29°40′43″ N 91°13′18″ W	
8	Wax Bayou Junction	Light "A" Mile 98.2W ICW	29°39′29″ N 91°14′46″ W	
9	Shaffer Junction	ICW-Bayou Shaffer Mile 94.5 ICW.	29°41′10″ N 91°11′38″ W	

[CGD 90–020, 59 FR 36324, July 15, 1994, as amended by CGD 95–033, 60 FR 28332, May 31, 1995; USCG–1998–3799, 63 FR 35531, June 30, 1998; USCG–2009–0416, 74 FR 27441, June 10, 2009]

§ 161.45 Vessel Traffic Service St. Marys River.

(a) The VTS area consists of the navigable waters of the St. Marys River and lower Whitefish Bay from 45°57′ N. (De Tour Reef Light) to the south, to 46°38.7′ N. (Ile Parisienne Light) to the north, except the waters of the St. Marys Falls Canal, and to the east along a line from La Pointe to Sims Point, within Potagannissing Bay and Worsley Bay.

(b) Reporting Points.

TABLE 161.45(b)—VTS ST. MARYS RIVER REPORTING POINTS

Designator	Geographic name	Geographic description	Latitude/longitude	Notes
1	Ile Parisienne	Ile Parisienne Light	46°37.3′ N; 84°45.9′ W	Downbound Only.
2	Gros Cap Reef	Gros Cap Reefs Light	46°30.6′ N; 84°37.1′ W	Upbound Only.
3	Round Island	Round Island Light 32	46°26.9′ N; 84°31.7′W.	
4	Pointe Louise	Pointe Louise Light	46°27.8′ N; 84°28.2′W.	
5*	West End of Locks	West Center Pierhead Light	46°30.2′ N; 84°22.2′ W	Upbound Only.
6	East End of Locks	East Center Pierhead Light	46°30.1′ N; 84°20.3′ W	Downbound Only.
7	Mission Point	Light 99	46°29.2′ N; 84°18.1′W.	
8	Six Mile Point	Six Mile Point	46°26.1′ N; 84°15.4′W.	
9	Ninemile Point	Light 80	46°23.5′ N; 84°14.1′W.	
10	West Neebish Channel	Light 29	46°16.9′ N; 84°12.5′ W	Downbound Only.
11	Munuscong Lake Junction	Lighted Junction Buoy	46°10.8′ N; 84°05.6′W.	
12	De Tour Reef	De Tour Reef Light	46°56.9′ N; 83°53.7′ W.	

[CGD 90–020, 59 FR 36324, July 15, 1994, as amended by CGD 95–033, 60 FR 28332, May 31, 1995; USCG–1998–3799, 63 FR 35531, June 30, 1998]

§ 161.50 Vessel Traffic Service San Francisco.

The VTS area consists of all the navigable waters of San Francisco Bay Region south of the Mare Island Causeway Bridge and the Petaluma River Entrance Channel Daybeacon 19 and Petaluma River Entrace Channel Light 20 and north of the Dumbarton Bridge; its seaward approaches within a 38 nautical mile radius of Mount Tamalpais (37–55.8′ N., 122–34.6′ W.); and its navigable tributaries as far east as the port of Stockton on the San Joaquin River, as far north as the port of Sacramento on the Sacramento River.

[CGD 90–020, 59 FR 36324, July 15, 1994, as amended by CGD 95–033, 60 FR 28332, May 31, 1995]

§ 161.55 Vessel Traffic Service Puget Sound and the Cooperative Vessel Traffic Service for the Juan de Fuca Region.

The Vessel Traffic Service Puget Sound area consists of the navigable waters of the United States bounded by a line drawn from the Washington State coastline at 48°23′08″ N., 124°43′37″ W. on Cape Flattery to the Cape Flattery Light at 48°23′30″ N., 124°44′12″ W. on Tatoosh Island, due west to the U.S. Territorial Sea Boundary; thence northward along the U.S. Territorial Sea Boundary to its intersection with the U.S./Canada International Boundary; thence east along the U.S./Canada International Boundary through the waters known as the Strait of Juan de Fuca, Haro Strait, Boundary Pass, and the Strait of Georgia to the Washington State coastline at 49°00′06″ N., 122°45′18″ W. (International Boundary Range C Rear Light). This area includes: Puget Sound, Hood Canal, Possession Sound, the San Juan Island Archipelago, Rosario Strait, Guemes Channel, Bellingham Bay, the U.S. waters of the Strait of Juan de Fuca and the Strait of Georgia, and all waters adjacent to the above.

(a) Vessel Traffic Service Puget Sound participates in a U.S./Canadian Cooperative Vessel Traffic Service (CVTS) to jointly manage vessel traffic in the Juan de Fuca Region. The CVTS for the Juan de Fuca Region consists of all waters of the Strait of Juan de Fuca and its offshore approaches, southern Georgia Strait, the Gulf and San Juan Archipelagos, Rosario Strait, Boundary Pass and Haro Strait, bounded on the northwest by 48°35′45″ N.; and on the southwest by 48°23′30″ N.; and on the west by the rhumb line joining 48°35′45″ N., 124°47′30″ W. with 48°23′30″ N., 124°48′37″ W.; and on the northeast in the Strait of Georgia, by a line drawn along 49° N. from Vancouver Island to Semiahmoo Bay; and on the southeast, by a line drawn from McCurdy Point on the Quimper Peninsula to Point Partridge on Whidbey Island. Canadian and United States Vessel Traffic Centers (Tofino, B.C., Canada, Vancouver, BC, Canada and Seattle, WA) manage traffic within the CVTS area irrespective of the International Boundary.

(b) VTS Special Area: The Eastern San Juan Island Archipelago VTS Special Area consists of all waters of the eastern San Juan Island Archipelago including: Rosario Strait bounded to the south by latitude 48°26.40′ N. (the center of the Precautionary Area ''RB'') extending from Lopez Island to Fidalgo Island, and to the north by latitude 48°40.57′ N. (the center of the Precautionary Area ''C'') extending from Orcas Island to Lummi Island; Guemes Channel; Bellingham Channel; Padilla Bay and southern Bellingham Bay (Samish Bay) south of latitude 48°38.42′N.

NOTE: The center of precautionary area ''RB'' is not marked by a buoy. All precautionary areas are depicted on National Oceanic and Atmospheric Administration (NOAA) nautical charts.

(c) Additional VTS Special Area Operating Requirements. The following additional requirements are applicable in the Eastern San Juan Island Archipelago VTS Special Area:

(1) A vessel engaged in towing shall not impede the passage of a vessel of 40,000 dead weight tons or more.

(2) A vessel of less than 40,000 dead weight tons is exempt from the provision set forth in § 161.13(b)(1) of this part.

(3) A vessel of less than 100 meters in length is exempt from the provisions set forth in § 161.13(b)(3) of this part. Approval will not be granted for:

(i) A vessel of 100 meters or more in length to meet or overtake; or cross or operate within 2,000 yards (except when

crossing astern) of a vessel of 40,000 dead weight tons or more; or

(ii) A vessel of 40,000 dead weight tons or more to meet or overtake; or cross or operate within 2,000 yards (except when crossing astern) of a vessel of 100 meters or more in length.

(d) Reporting Point. Inbound vessels in the Strait of Juan de Fuca upon crossing 124–W.

[CGD 90–020, 59 FR 36324, July 15, 1994, as amended by USCG–1998–3799, 63 FR 35531, June 30, 1998; USCG–2011–1024, 78 FR 51671, Aug. 21, 2013]

§ 161.60 Vessel Traffic Service Prince William Sound.

(a) The VTS area consists of the navigable waters of the United States north of a line drawn from Cape Hinchinbrook Light to Schooner Rock Light, comprising that portion of Prince William Sound between 146°30′ W. and 147°20′ W. and includes Valdez Arm, Valdez Narrows and Port Valdez.

(b) The Valdez Arm VTS Special Area consists of the waters of the Valdez Arm Traffic Separation Scheme (described in § 167.1703 of this chapter); the waters northeast of a line drawn from shoreline to shoreline through the points 60°58.04′ N, 146°46.52′ W and 60°58.93′ N, 146°48.86′ W; and southwest of a line bearing 307° True from Tongue Point at 61°02.10′ N, 146°40.00′ W.

(c) The Valdez Narrows VTS Special Area consists of those waters of Valdez Arm, Valdez Narrows, and Port Valdez northeast of a line bearing 307° True from Tongue Point at 61°02′06″ 146°40′ W.; and southwest of a line bearing 307° True from Entrance Island Light at 61°05′06″ N., 146°36′42″ W.

(d) Additional VTS Special Area Operating Requirements. The following additional requirements are applicable in the Valdez Narrows VTS Special Area:

(1) No VMRS User shall proceed north of 61° N. without prior approval of the VTS.

(2) For a vessel listed in paragraph (c)(3) of this section—

(i) Approval to enter this area will not be granted to a vessel when a tank vessel of more than 20,000 deadweight tons is navigating therein;

(ii) A northbound vessel shall remain south of 61° N. until the VTS has granted permission to proceed; and

(iii) A southbound vessel shall remain in Port Valdez east of 146°35′ W. and north of 61°06′ N. until the VTS has granted permission to proceed.

(3) Paragraph (c)(2) of this section applies to—

(i) A vessel of 1600 gross tons or more; and

(ii) A towing vessel of 8 meters or more in length, except for a vessel performing duties as an escort vessel as defined in 33 CFR Part 168.

(e) Reporting Points.

TABLE 161.60(d)—VTS PRINCE WILLIAM SOUND REPORTING POINTS

Designator	Geographic name	Geographic description	Latitude/longitude	Notes
1A	Cape Hinchinbrook	Cape Hinchinbrook	60°16′18″ N; 146°45′30″ W	Northbound Only.
1B	Schooner Rock	Schooner Rock	60°18′42″ N; 146°51′36″ W	Southbound Only.
2A	Naked Island	Naked Island	60°40′00″ N; 147°01′24″ W	Northbound Only.
2B	Naked Island	Naked Island	60°40′00″ N; 147°05′00″ W	Southbound Only.
3A	Bligh Reef	Bligh Reef Light (Pilot Embark)	60°50′36″ N; 146°57′30″ W	Northbound Only.
3B	Bligh Reef	Bligh Reef Light (Pilot Disembark)	60°51′00″ N; 147°01′24″ W	Southbound Only.
4A	Rocky Point	Rocky Point	60°57′48″ N; 146°47′30″ W	Northbound Only.
4B	Rocky Point	Rocky Point	60°57′48″ N; 146°50′00″ W	Southbound Only.
5	Entrance Island	Entrance Island Light	61°05′24″ N; 146°37′30″ W.	

[CGD 90–020, 59 FR 36324, July 15, 1994, as amended by CGD 95–033, 60 FR 28332, May 31, 1995; USCG–1998–3799, 63 FR 35532, June 30, 1998; USCG–2001–10254, 67 FR 53742, Aug. 19, 2002]

§ 161.65 Vessel Traffic Service Lower Mississippi River.

(a) The Vessel Traffic Service (VTS) area consists of navigable waters of the Lower Mississippi River (LMR) below 30°38.7′ N 91°17.5′ W (Port Hudson Light at 254.5 miles Above Head of Passes (AHP)), the Southwest Pass, and those within a 12-nautical mile radius around 28°54.3′ N 89°25.7′ W (Southwest Pass Entrance Light at 20.1 miles Below Head of Passes).

(b) The Algiers Point VTS Special Area consists of the navigable waters of the LMR bounded on the north by a line drawn from 29°57.62′ N 90°02.61′ W to 29°57.34′ N 90°02.60′ W and on the south by a line drawn from 29°56.89′ N 90°03.72′ W to 29°56.93′ N 90°03.34′ W (95.0 and 93.5 miles AHP) during periods of high water—that is, when the Carrolton Gage reads 8.0 feet or above on a rising stage or 9.0 feet or above on a falling stage, or under any other water conditions the Captain of the Port (COTP) deems necessary.

(c) *Additional Algiers Point VTS Special Area Operating Requirements.* The following additional requirements are applicable in the Algiers Point VTS Special Area:

(1) A vessel movement reporting system (VMRS) user must abide by the signals of the Governor Nicholls Street Wharf, 29°57.6′ N 90°03.4′ W, and Gretna, 29°55.5′ N 90°03.7′ W, Control Lights (94.3 and 96.6 miles AHP, respectively) in the following manner:

(i) *Green Light*—May proceed as intended.

(ii) *Red Light*—Do not proceed, unless otherwise directed by the VTS.

(iii) *No Light*—Do not proceed, immediately notify VTS and await further directions.

NOTE TO §161.65(c)(1): To provide advance notification to downbound vessels, a traffic repeater signal of Gretna Light is located at Westwego, LA, 29°54.8′ N; 90°08.3′ W (101.4 miles AHP).

(2) A vessel awaiting a signal change or VTS directions must keep clear of other vessels transiting the area.

(d) The Eighty-one Mile Point VTS Special Area consists of navigable waters of the LMR between 167.5 miles AHP and 187.9 miles AHP.

(e) *Additional Eighty-one Mile Point VTS Special Area Operating Requirements.* The following additional requirements are applicable in the Eighty-one Mile Point VTS Special Area:

(1) Prior to proceeding upriver past 167.5 miles AHP, Sunshine Bridge, vessels must contact VTS New Orleans on VHF Channel 5A to check-in. Vessels must provide name and destination, confirm proper operation of their automated identification system (AIS) if required under 33 CFR 164.46, and, if applicable, size of tow and number of loaded and empty barges. At 173.7 miles AHP, Bringier Point Light, ascending vessels must contact VTS New Orleans and provide a follow-on position check. At both check-in and follow-on position check, VTS New Orleans will advise the vessel on traffic approaching Eighty-one Mile Point.

(2) Prior to proceeding downriver past 187.9 miles AHP COS–MAR Lights, vessels must contact VTS New Orleans on VHF Channel 5A to check-in. Vessels must provide name and destination, confirm proper operation of their AIS if required under 33 CFR 164.46, and, if applicable, size of tow and number of loaded and empty barges. At 183.9 miles AHP, Wyandotte Chemical Dock Lights, descending vessels must contact VTS New Orleans and provide a follow-on position check. At both check-in and follow-on position check, VTS New Orleans will advise the vessel on traffic approaching Eighty-one Mile Point.

(3) All vessels getting underway between miles 167.5 and 187.9 AHP must check-in with VTS New Orleans on VHF Channel 5A immediately prior to getting underway and must comply with the respective ascending and descending check-in and follow-on points listed in paragraphs (e)(1) and (2) of this section.

(4) Fleet vessels must checkin with VTS New Orleans if they leave their respective fleet or if they move into the main channel. Fleet vessels are not required to checkin if they are operating exclusively within their fleet.

(f) *Reporting Points.* Table 161.65(f) lists the VTS Lower Mississippi River Reporting Points.

TABLE 161.65(f)—VTS LOWER MISSISSIPPI RIVER REPORTING POINTS

Designator	Geographic name	Geographic description	Latitude/longitude/mile marker	Notes
A	Algiers Canal Forebay	88.0 AHP	29°55.40′ N; 89°57.7′ W	Upbound transiting Algiers Point Special Area.

TABLE 161.65(f)—VTS LOWER MISSISSIPPI RIVER REPORTING POINTS—Continued

Designator	Geographic name	Geographic description	Latitude/longitude/mile marker	Notes
B	Industrial Canal	92.7 AHP	29°57.2′ N; 90°01.68′ W	Upbound transiting Algiers Point Special Area.
C	Crescent Towing Smith Fleet.	93.5 AHP	29°57.50′ N; 90°02.62′ W	Upbound Towing vessels transiting Algiers Point Special Area.
D	Marlex Terminal (Naval Ships).	99.0 AHP	29°54.65′ N; 90°05.87′ W	Downbound transiting Algiers Point Special Area.
E	Huey P Long Bridge	106.1 AHP	29°56.6′ N; 90°10.1′ W	Downbound transiting Algiers Point Special Area.

[USCG–1998–4399, 75 FR 66314, Oct. 28, 2010, as amended at 76 FR 31230, May 31, 2011]

§ 161.70 Vessel Traffic Service Port Arthur.

(a) The VTS area consists of the navigable waters of the United States to the limits of the territorial seas bound by the following points: 30°10.00′ N., 92°37.00′ W.; then south to 29°10.00′ N., 92°37.00′ W.; then west to 29°10.00′ N., 93°52.25′ W.; then northwest to 29°33.70′ N., 94°21.25′ W.; then north to 30°10.00′ N., 94°21.25′ W.; then east along the 30°10′ N. latitude to the origination point.

NOTE: Although mandatory participation in VTS Port Arthur is limited to the area within the navigable waters of the United States, prospective users are encouraged to report at the safe water marks in order to facilitate vessel traffic management in the VTS Area and to receive advisories or navigational assistance.

(b) *Precautionary areas.*

TABLE 161.70(b)—VTS PORT ARTHUR PRECAUTIONARY AREAS

Precautionary area name	Radius	Center point latitude	Center point longitude
Petco Bend [1]	2000 yds	30°00.80′ N.	93°57.60′ W.
Black Bayou [1]	2000 yds	30°00.00′ N.	93°46.20′ W.
Orange Cut [1]	2000 yds	30°03.25′ N.	93°43.20′ W.
Neches River Intersection [1]	2000 yds	29°58.10′ N.	93°51.25′ W.
Texaco Island Intersection [1]	2000 yds	29°49.40′ N.	94°57.55′ W.
Sabine-Neches Waterway	N/A	All waters of the Sabine-Neches Waterway between the Texaco Island Precautionary Area and the Humble Island Precautionary Area.	

[1] Precautionary Area encompasses a circular area of the radius denoted around the center point with the exception of the Sabine-Neches Waterway.

(c) *Reporting points (Inbound).*

TABLE 161.70(c)—INBOUND

Designator	Geographic name	Geographic description	Latitude/longitude	Notes
1	Sabine Bank Channel "SB" Buoy.	Sabine Bank Sea Buoy	29°25.00′ N. 93°40.00′ W.	Sailing Plan Report
2	Sabine Pass Buoys "29/30"	Sabine Pass Buoys "29/30"	29°35.90′ N. 93°48.20′ W.	
3	Port Arthur Canal Light "43"	Keith Lake	29°46.50′ N. 93°56.47′ W.	
4	North Forty GIWW Mile 279	North Forty	29°56.40′ N. 93°52.10′ W.	
5	FINA Highline Neches River Light "19".	FINA Highline	29°59.10′ N. 93°54.30′ W.	
6	Ready Reserve Fleet Highline	Channel at Cove Mid-Point	30°00.80′ N. 93°59.90′ W.	
7	Sabine River MM 268	268 Highline	30°02.20′ N. 93°44.30′ W.	

(d) *Reporting points (Outbound).*

TABLE 161.70(d)—OUTBOUND

Designator	Geographic name	Geographic description	Latitude/ longitude	Notes
1	Sabine River Light "2"	Black Bayou	30°00.00′ N. 93°46.25′ W.	
2	Ready Reserve Fleet Highline	Channel at Cove Mid-Point	30°00.80′ N. 93°59.90′ W.	
3	FINA Highline Neches River Light "19".	FINA Highline	29°59.09′ N. 93°54.30′ W.	
4	GIWW Mile 285	The School House	29°52.70′ N. 93°55.55′ W.	*Sector Shift*
5	Port Arthur Canal Light "43"	Keith Lake	29°46.50′ N. 93°56.47′ W.	
6	Sabine Pass Buoys "29/30"	Sabine Pass Buoys "29/30"	29°35.90′ N. 93°48.20′ W.	
7	Sabine Bank Channel "SB" Buoy.	Sabine Bank Sea Buoy	29°25.00′ N. 93°40.00′ W.	Final Report

(e) *Reporting points (Eastbound).*

TABLE 161.70(e)—EASTBOUND (ICW)

Designator	Geographic name	Geographic description	Latitude/ longitude	Notes
1	GIWW Mile 295	ICW MM 295	29°47.25′ N. 94°01.10′ W.	Sailing Plan Report.
2	North Forty GIWW Mile 279	North Forty	29°56.40′ N. 93°52.10′ W.	
3	Sabine River MM 268	268 Highline	30°02.20′ N. 93°44.30′ W.	
4	GIWW Mile 260	260 Highline	30°03.50′ N. 93°37.50′ W.	Final Report.

(f) *Reporting points (Westbound).*

TABLE 161.70(f)—WESTBOUND (ICW)

Designator	Geographic name	Geographic description	Latitude/ longitude	Notes
1	GIWW Mile 260	260 Highline	30°03.50′ N. 93°37.50′ W.	Sailing Plan Report.
2	Sabine River Light "2"	Black Bayou	30°00.03′ N. 93°46.18′ W.	
3	GIWW Mile 285	The School House	29°52.71′ N. 93°55.55′ W.	Sector Shift.
4	GIWW Mile 295	ICW MM 295	29°46.20′ N. 94°02.60′ W.	Final Report.

(g) *Reporting points (Offshore Safety Fairway).*

TABLE 161.70(g)—OFFSHORE SAFETY FAIRWAY

Designator	Geographic name	Geographic description	Latitude/ longitude	Notes
1	Sabine Pass Safety Fairway—East.	East Dogleg	29°35.00′ N. 93°28.00′ W.	
2	Sabine Pass Safety Fairway—West.	West Dogleg	29°28.00′ N. 93°58.00′ W.	

[78 FR 51671, Aug. 21, 2013]

PART 162—INLAND WATERWAYS NAVIGATION REGULATIONS

Sec.
162.1 General.
162.5 Definitions.
162.15 Manhasset Bay, N.Y.; seaplane restricted area.
162.20 Flushing Bay near La Guardia Airport, Flushing, N.Y.; restricted area.
162.30 Channel of Tuckerton Creek, N.J.; navigation.
162.35 Channel of Christina River, Del.; navigation.
162.40 Inland waterway from Delaware River to Chesapeake Bay, Del. and Md. (Chesapeake and Delaware Canal).
162.65 All waterways tributary to the Atlantic Ocean south of Chesapeake Bay and all waterways tributary to the Gulf of Mexico east and south of St. Marks, Fla.
162.75 All waterways tributary to the Gulf of Mexico (except the Mississippi River, its tributaries, South and Southwest Passes and the Atchafalaya River) from St. Marks, Fla., to the Rio Grande.
162.80 Mississippi River below mouth of Ohio River, including South and Southwest Passes.
162.85 Yazoo Diversion Canal, Vicksburg, Miss., from its mouth at Kleinston Landing to Fisher Street; navigation.
162.90 White River, Arkansas Post Canal, Arkansas River, and Verdigris River between Mississippi River, Ark., and Catoosa, Okla.; use, administration, and navigation.
162.100 Ohio River at Louisville, KY.
162.105 Missouri River; administration and navigation.
162.110 Duluth-Superior Harbor, Minnesota and Wisconsin.
162.115 Keweenaw Waterway, Mich.
162.117 St. Marys River, Sault Ste. Marie, Michigan.
162.120 Harbors on Lake Michigan.
162.125 Sturgeon Bay and the Sturgeon Bay Ship Canal, Wisc.
162.130 Connecting waters from Lake Huron to Lake Erie; general rules.
162.132 Connecting waters from Lake Huron to Lake Erie; communications rules.
162.134 Connecting waters from Lake Huron to Lake Erie; traffic rules.
162.136 Connecting waters from Lake Huron to Lake Erie; anchorage grounds.
162.138 Connecting waters from Lake Huron to Lake Erie; speed rules.
162.140 Connecting waters from Lake Huron to Lake Erie; miscellaneous rules.
162.145 Monroe Harbor, Mich.
162.150 Maumee Bay and River, Ohio.
162.155 Sandusky and Huron Harbors, Ohio.
162.160 Vermilion, Lorain, Cleveland, Fairport, Ashtabula, and Conneaut Harbors, Ohio.
162.165 Buffalo and Rochester Harbors, New York.
162.175 Black Rock Canal and Lock at Buffalo, New York.
162.195 Santa Monica Bay, Calif.; restricted area.
162.200 Marina del Ray, Calif.; restricted area.
162.205 Suisun Bay, San Joaquin River Sacramento River, and connecting waters, CA.
162.210 Lake Tahoe, Calif.; restricted areas along south shore.
162.215 Lake Tahoe, Nev.; restricted area adjacent to Nevada Beach.
162.220 Hoover Dam, Lake Mead, and Lake Mohave (Colorado River), Ariz.-Nev.
162.225 Columbia and Willamette Rivers, Washington and Oregon; administration and navigation.
162.230 Columbia River, Wash.
162.235 Puget Sound Area, Wash.
162.240 Tongass Narrows, Alaska; navigation.
162.245 Kenai River, Kenai, Alaska; use, administration, and navigation.
162.250 Port Alexander, Alaska; speed of vessels.
162.255 Wrangell Narrows, Alaska; use, administration, and navigation.
162.260 Channel leading to San Juan Harbor, P.R.; use, administration, and navigation.
162.270 Restricted areas in vicinity of Maritime Administration Reserve Fleets.

AUTHORITY: 33 U.S.C. 1231; Department of Homeland Security Delegation No. 0170.1.

SOURCE: CGD 75–082, 42 FR 51759, Sept. 29, 1977, unless otherwise noted.

§ 162.1 General.

Geographic coordinates expressed in terms of latitude or longitude, or both, are not intended for plotting on maps or charts whose referenced horizontal datum is the North American Datum of 1983 (NAD 83), unless such geographic coordinates are expressly labeled NAD 83. Geographic coordinates without the NAD 83 reference may be plotted on maps or charts referenced to NAD 83 only after application of the appropriate corrections that are published on the particular map or chart being used.

[CGD 86–082, 52 FR 33811, Sept. 8, 1987]

§ 162.5 Definitions.

The following definition applies to this part:

Merchant mariner credential or MMC means the credential issued by the Coast Guard under 46 CFR part 10. It combines the individual merchant mariner's document, license, and certificate of registry enumerated in 46 U.S.C. subtitle II part E as well as the STCW endorsement into a single credential that serves as the mariner's qualification document, certificate of identification, and certificate of service.

[USCG–2006–24371, 74 FR 11212, Mar. 16, 2009]

§ 162.15 Manhasset Bay, N.Y.; seaplane restricted area.

(a) *The restricted area.* An area in Manhasset Bay between the shore at Manorhaven on the north and the southerly limit line of the special anchorage area in Manhasset Bay, west area at Manorhaven (described in § 110.60 of this chapter), on the south; its axis being a line bearing 166°50′ true from latitude 40°50′17.337 N, longitude 73°43′03.877 W, which point is on the south side of Orchard Beach Boulevard at Manorhaven; and being 100 feet wide for a distance of 380 feet in a southerly direction from the south side of Orchard Beach Boulevard, and thence flaring to a width of 300 feet at the southerly limit line.

(b) *The regulations.* (1) Vessels shall not anchor or moor within the restricted area.

(2) All vessels traversing the area shall pass directly through without unnecessary delay, and shall give seaplanes the right-of-way at all times.

[CGD 75–082, 42 FR 51759, Sept. 29, 1977, as amended by USCG–2008–0179, 73 FR 35016, June 19, 2008]

§ 162.20 Flushing Bay near La Guardia Airport, Flushing, N.Y.; restricted area.

(a) *The area.* An area in the main channel in Flushing Bay extending for a distance of 300 feet on either side of the extended center line of Runway No. 13–31 at La Guardia Airport.

(b) *The regulations.* (1) All vessels traversing the area shall pass directly through without unnecessary delay.

(2) No vessels having a height of more than 35 feet with reference to the plane of mean high water shall enter or pass through the area whenever visibility is less than one mile.

[CGD 75–082, 42 FR 51759, Sept. 29, 1977, as amended by USCG–2011–0257, 76 FR 31838, June 2, 2011]

§ 162.30 Channel of Tuckerton Creek, N.J.; navigation.

(a) Power boats or other vessels propelled by machinery shall not proceed at any time within the limits of these waters at a greater speed than 8 statute miles per hour.

§ 162.35 Channel of Christina River, Del.; navigation.

(a) That vessels of over 20 tons capacity, propelled by machinery, shall not proceed at any time within the limits of these waters at a greater speed than 8 statute miles per hour.

§ 162.40 Inland waterway from Delaware River to Chesapeake Bay, Del. and Md. (Chesapeake and Delaware Canal).

(a) *Applicability.* The regulations in this section are applicable to that part of the inland waterway from Delaware River to Chesapeake Bay, Del. and Md., between Reedy Point, Delaware River, and Old Town Point Wharf, Elk River.

(b) *Speed.* No vessel in the waterway shall be raced or crowded alongside another vessel. Vessels of all types, including pleasure craft, are required to travel at all times at a safe speed throughout the canal and its approaches so as to avoid damage by suction or wave wash to wharves, landings, riprap protection, or other boats, or injury to persons. Pilots and vessel operators transiting the canal and its approaches are warned that violation of this rule may result in having their privilege to transit the canal suspended. Passages of vessels through the canal will be monitored and specific cases will be investigated where damage by suction or wave wash does occur. Owners and operators of yachts, motorboats, rowboats and other craft are cautioned that large deep draft ocean-going vessels and other large commercial vessels ply the canal, and such owners and operators should be particularly careful to moor or anchor well away from the main ship channels,

with moorings and lines which are sufficient and proper.

(c) *Right-of-way*. All vessels proceeding with the current shall have the right-of-way over those proceeding against the current. Large vessels or tows must not overtake and attempt to pass other large vessels or tows in the waterway. All small pleasure craft shall relinquish the right-of-way to deeper draft vessels, which have a limited maneuvering ability due to their draft and size.

(d) *Stopping in waterway*. Vessels will not be permitted to stop or anchor in the ship channel.

(e) *Water skiing*. Water skiing in the waterway is prohibited between Reedy Point and Welch Point.

(f) *Sailboats*. Transiting the canal by vessels under sail is not permitted between Reedy Point and Welch Point.

NOTE: The Corps of Engineers also has regulations dealing with this section in 33 CFR Part 207.

§ 162.65 All waterways tributary to the Atlantic Ocean south of Chesapeake Bay and all waterways tributary to the Gulf of Mexico east and south of St. Marks, Fla.

(a) *Description*. This section applies to the following:

(1) *Waterways*. All navigable waters of the United States, natural or artificial, including bays, lakes, sounds, rivers, creeks, intracoastal waterways, as well as canals and channels of all types, which are tributary to or connected by other waterways with the Atlantic Ocean south of Chesapeake Bay or with the Gulf of Mexico east and south of St. Marks, Florida.

(2) *United States property*. All river and harbor lands owned by the United States in or along the waterways described in paragraph (a)(1) of this paragraph, including lock sites and all structures thereon, other sites for Government structures and for the accommodation and use of employees of the United States, and rights of way and spoil disposal areas to the extent of Federal interest therein.

(3) *Vessels and rafts*. The term ''vessel'' as used in this section includes all floating things moved over these waterways other than rafts.

(b) *Waterways*—(1) *Fairway*. A clear channel shall at all times be left open to permit free and unobstructed navigation by all types of vessels and rafts that normally use the various waterways or sections thereof. The District Commander may specify the width of the fairway required in the various waterways under his charge.

(2) *Stoppage in waterway, anchorage or mooring*. (i) No vessels or rafts shall anchor or moor in any of the land cuts or other narrow parts of the waterway, except in case of an emergency. Whenever it becomes necessary for a vessel or raft to stop in any such portions of the waterway it shall be securely fastened to one bank and as close to the bank as possible. This shall be done only at such a place and under such conditions as will not obstruct or prevent the passage of other vessels or craft. Stoppages shall be only for such periods as may be necessary.

(ii) No vessel or raft will be allowed to use any portion of the fairway as a mooring place except temporarily as authorized above without the written permission from the District Commander.

(iii) When tied up, all vessels must be moored by bow and stern lines. Rafts and tows shall be secured at sufficiently close intervals to insure their not being drawn away from the bank by winds, currents or the suction of passing vessels. Tow lines shall be shortened so that the different parts of the tow shall be as close together as possible. In narrow sections, no vessel or raft shall be tied abreast of another.

(iv) Lights shall be displayed in accordance with provisions of the Navigation Rules, International-Inland, Commandant Instruction M16672.2 (series).

(v) No vessel, even if fastened to the bank as prescribed in paragraph (b)(2)(i) of this section, shall be left without a sufficient crew to care for it properly.

(vi) Vessels will not be permitted to load or unload in any of the land cuts except as a regular established landing or wharf without written permission secured in advance from the District Commander.

(vii) No vessel, regardless of size, shall anchor in a dredged channel or narrow portion of a waterway for the purpose of fishing, if navigation is obstructed, thereby.

(viii) Except in cases of emergency the dropping of anchors, weights, or other ground tackle, within areas occupied by submarine cable or pipe crossings, is prohibited. Such crossings will ordinarily be marked by signboards on each bank of the shore or indicated on coast charts.

(3) *Speed.* (i) Vessels shall proceed at a speed which will not endanger other vessels or structures and will not interfere with any work in progress incident to maintaining, improving, surveying or marking the channel.

(ii) Official signs indicating limiting speeds through critical portions of the waterways shall be strictly obeyed.

(iii) Vessels approaching and passing through a bridge shall so govern their speed as to insure passage through the bridge without damage to the bridge or its fenders.

(4) *Assembly and handling of tows.* (i) All vessels drawing tows and equipped with rudders shall use two tow lines or a bridle and shorten them to the greatest possible extent so as to have full control at all times. The various parts of a tow shall be securely assembled with the individual units connected by lines as short as practicable. If necessary, as in the case of lengthy or cumbersome tows or tows in restricted channels, the District Commander may require that tows be broken up and may require the installation of a rudder, drag or other approved steering device on the tow in order to avoid obstructing navigation or damaging the property of others, including aids to navigation maintained by the United States or under its authorization, by collision or otherwise.

(ii) No tow shall be drawn by a vessel that has insufficient power or crew to permit ready maneuverability and safe handling.

(iii) Tows desiring to pass a bridge shall approach the opening along the axis of the channel so as to pass through without danger of striking the bridge or its fenders. No vessel or tow shall navigate through a drawbridge until the movable span is fully opened.

(iv) In the event that it is evident to the master of a towing vessel that a tow cannot be safely handled through a bridge, it will be brought to anchor and the towed vessels will be taken through the bridge in small units, or singly if necessary, or the tow will wait until navigation conditions have improved to such an extent that the tow can pass through the bridge without damage.

(5) *Projections from vessels.* No vessel carrying a deck load which overhangs or projects over the side of said vessel, or whose rigging projects over the side of the vessel so as to endanger passing vessels, wharves or other property, will enter or pass through any of the narrow parts of the waterway.

(6) *Meeting and passing.* Vessels, on meeting or overtaking, shall give the proper signals and pass in accordance with the Navigation Rules, International-Inland, Commandant Instruction M16672.2 (series). Rafts shall give to vessels the side demanded by proper signal. All vessels approaching dredges or other plant engaged on improvements to a waterway, shall give the signal for passing and slow down sufficiently to stop if so ordered or if no answering signal is received. On receiving the answering signal, they shall then proceed to pass at a speed sufficiently slow to insure safe navigation.

NOTE: The Corps of Engineers also has regulations dealing with this section in 33 CFR Part 207.

[CGD 75–082, 42 FR 51759, Sept. 29, 1977, as amended by CGD 93–072, 59 FR 39963, Aug. 5, 1994; USCG–2000–7223, 65 FR 40058, June 29, 2000]

§ 162.75 All waterways tributary to the Gulf of Mexico (except the Mississippi River, its tributaries, South and Southwest Passes and Atchafalaya River) from St. Marks, Fla., to the Rio Grande.

(a) The regulations in this section shall apply to:

(1) *Waterways.* All navigable waters of the U.S. tributary to or connected by other waterways with the Gulf of Mexico between St. Marks, Fla., and the Rio Grande, Tex. (both inclusive), and the Gulf Intracoastal Waterway; except the Mississippi River, its tributaries, South and Southwest Passes, and the Atchafalaya River above its junction with the Morgan City-Port Allen Route.

(2) *Bridges, wharves, and other structures.* All bridges, wharves, and other structures in or over these waterways.

(3) *Vessels*. The term ''vessels'' as used in this section includes all floating craft other than rafts.

(b) Waterways:

(1) A clear channel shall at all times be left open to permit free and unobstructed navigation by all types of vessels and tows normally using the various waterways covered by the regulations of this section

(2) Fairway: The District Commander may specify the width of the fairway required in the various waterways under his charge.

(3) Anchoring or mooring:

(i) Vessels or tows shall not anchor or moor in any of the land cuts or other narrow parts of the waterway, except in an emergency, or with permission of the District Commander. Whenever it becomes necessary for a vessel or tow to stop in any such portions of the waterway, it shall be securely fastened to one bank and as close to the bank as possible. This shall be done only at such a place and under such conditions as will not obstruct or prevent the passage of other vessels or tows. Stoppages shall be only for such periods as may be necessary.

(ii) When tied up individually, all vessels and tows shall be moored by bow and stern lines. Tows shall be secured at sufficiently frequent intervals to insure their not being drawn away form the bank by winds, currents, or the suction of passing vessels. Lines shall be shortened so that the various barges in a tow will be as close together as possible.

(iii) Lights shall be displayed in accordance with provisions of the Navigation Rules, International-Inland, Commandant Instruction M16672.2 (series).

(iv) Whenever any vessel or tow is moored to the bank (paragraph (b)(3)(i) of this section) at least one crew member shall always remain on board to see that proper signals are displayed and that the vessel or tow is properly moored at all times.

(v) No vessel, regardless of size, shall anchor in a dredged channel or narrow portion of a waterway for the purpose of fishing if navigation is obstructed thereby.

(4) Speed: Speeding in narrow sections is prohibited. Official signs indicating limited speeds shall be obeyed. Vessels shall reduce speed sufficiently to prevent damage when passing other vessels or structures in or along the waterway.

(5) Size, assembly, and handling of tows:

(i) On waterways 150 feet wide or less, tows which are longer than 1,180 feet, including the towing vessel, but excluding the length of the hawser, or wider than one-half of the bottom width of the channel or 55 feet, whichever is less will not be allowed, except when the District Commander has given special permission or the waterway has been exempted from these restrictions by the District Commander. Before entering any narrow section of the Gulf Intracoastal Waterway, tows in excess of one-half the channel width, or 55 feet, will be required to stand by until tows which are less than one-half the channel width or 55 feet wide have cleared the channel. When passing is necessary in narrow channels, overwidth tows shall yield to the maximum. Separate permission must be received from the District Commander for each overlength or overwidth movement. In addition, the following exceptions are allowed:

(ii) Gulf Intracoastal Waterway—Between mile 6.2 EHL (Inner Harbor Navigation Canal Lock) and mile 33.6 EHL tows of 78 feet in width will be allowed.

(iii) Gulf Intercoastal Waterway—Between mile 33.6 EHL and the Mobile Bay Ship Channel, tows of 108 feet in width will be allowed if under 750 feet in length including the towboat but excluding the length of the hawser.

(iv) Gulf Intracoastal Waterway—Mobile Bay Ship Channel to St. Marks, Fla., for tows made up of empty barges on the off or shallow side, a width of 75 feet will be allowed.

(v) All vessels pulling tows not equipped with rudders in restricted channels and land cuts shall use two towlines, or a bridle on one towline, shortened as much as safety of the towing vessel permits, so as to have maximum control at all times. The various parts of a tow shall be securely assembled with the individual units connected by lines as short as practicable. In open water, the towlines and fastenings between barges may be lengthened so as to accommodate the wave

surge. In the case of lengthy or cumbersome tows, or tows in restricted channels, the District Commander may require that tows be broken up, and may require the installation of a rudder or other approved steering device on the tow in order to avoid obstructing navigation or damaging the property of others. Pushing barges with towing vessel astern, towing barges with towing vessel alongside, or pushing and pulling barges with units of the tow made up both ahead and astern of the towing vessel are permissible provided that adequate power is employed to keep the tows under full control at all times. No tow shall be drawn by a vessel that has insufficient power or crew to permit ready maneuverability and safe handling.

(vi) All tows navigating the Pass Manchac bridges in Louisiana are limited to no more than two barges, not to exceed a combined tow length of 400 feet (excluding the towboat). Vessel operators for tows exceeding these limits must request and receive permission from the COTP New Orleans prior to navigating the bridges. Requests should be made by telephoning the COTP at 504–846–5923. Any decision made by the COTP is final agency action.

(6) Projections from vessels: Vessels or tows carrying a deck load which overhangs or projects over the side, or whose rigging projects over the side, so as to endanger passing vessels, wharves, or other property, shall not enter or pass through any of the narrow parts of the waterway without prior approval of the District Commander.

(7) Meeting and passing: Passing vessels shall give the proper signals and pass in accordance with the International Rules, the Navigation Rules, International-Inland, Commandant Instruction M16672.2 (Series), where applicable. At certain intersections where strong currents may be encountered, sailing directions may be issued through navigation bulletins or signs posted on each side of the intersections.

NOTE: The Corps of Engineers also has regulations dealing with this section in 33 CFR 207.

[CGD 75–082, 42 FR 51759, Sept. 29, 1977, as amended by CGD 78–050, 45 FR 43167, June 26, 1980; USCG–2000–7223, 65 FR 40058, June 29, 2000; USCG–2008–0179, 73 FR 35016, June 19, 2008]

§ 162.80 Mississippi River below mouth of Ohio River, including South and Southwest passes.

(a) *Mooring on the Mississippi River between miles 311.5 AHP and 340.0 AHP.* (1) No vessel or craft shall moor along either bank of the Mississippi River between miles 311.5 AHP and mile 340.0 AHP except in case of an emergency, pursuant to an approved navigation permit, or as authorized by the District Commander. Vessels may be moored any place outside the navigation channel in this reach in case of an emergency and then for only the minimum time required to terminate the emergency. When so moored, all vessels shall be securely tied with bow and stern lines of sufficient strength and fastenings to withstand currents, winds, wave action, suction from passing vessels or any other forces which might cause the vessels to break their moorings. When vessels are so moored, a guard shall be on board at all times to ensure that proper signals are displayed and that the vessels are securely and adequately moored.

(2) Vessels may be moored any time at facilities constructed in accordance with an approved navigation permit or as authorized by the District Commander. When so moored, each vessel shall have sufficient fastenings to prevent the vessels from breaking loose by wind, current, wave action, suction from passing vessels or any other forces which might cause the vessel to break its mooring. The number of vessels in one fleet and the width of the fleet of vessels tied abreast shall not extend into the fairway or be greater than allowed under the permit.

(3) Mariners should report immediately by radio or fastest available means to the lockmaster at Old River Lock or to any government patrol or survey boat in the vicinity any emergency mooring or vessels drifting uncontrolled within the area described in paragraph (a)(1) of this section. It is

the responsibility and duty of the master of a towing vessel releasing or mooring a vessel in this reach of the Mississippi River to report such action immediately.

(b) *Mooring on Mississippi River below Baton Rouge, La., including South and Southwest Passes.* (1) When tied up individually or in fleets, vessels shall be moored with sufficient lines and shore fastenings to insure their remaining in place and withstanding the action of winds, currents and the suction of passing vessels.

NOTE: The Corps of Engineers also has regulations dealing with this section in 33 CFR Part 207.

(Sec. 7, 38 Stat. 1053, as amended, (33 U.S.C. 471); Sec. 6(g)(1)(A) 80 Stat 937, (49 U.S.C. 1655(g)(1)(A); Sec. 12, 92 Stat. 1471, (33 U.S.C. 1231); 49 CFR 1.46 (c)(1) and (n)(4))

[CGD 75–082, 42 FR 51759, Sept. 29, 1977, as amended by CGD 77–028, 46 FR 49851, Oct. 8, 1981; CGD8 87–09, 53 FR 15555, May 2, 1988]

§ 162.85 Yazoo Diversion Canal, Vicksburg, Miss., from its mouth at Kleinston Landing to Fisher Street; navigation.

(a) *Speed.* Excessive speeding is prohibited. A vessel shall reduce its speed sufficiently to prevent any damage when approaching another vessel in motion or tied up, a wharf or other structure, works under construction, plant engaged in river and harbor improvement, levees, floodwalls withstanding floodwaters, buildings submerged or partially submerged by high waters, or any other structure or improvement likely to be damaged by collision, suction, or wave action.

NOTE: The Corps of Engineers also has regulations dealing with this section in 33 CFR Part 207.

§ 162.90 White River, Arkansas Post Canal, Arkansas River, and Verdigris River between Mississippi River, Ark., and Catoosa, Okla.; use, administration, and navigation.

(a) The regulations in this section shall apply to:

(1) *Waterways.* White River between Mississippi River and Arkansas Post Canal, Ark.; Arkansas Post Canal, Ark.; Arkansas River between Arkansas Post Canal, Ark., and Verdigris River, Okla.; Verdigris River between Arkansas River and Catoosa, Okla.; and reservoirs on these waterways between Mississippi River Ark., and Catoosa, Okla.

(2) *Bridges, wharves and other structures.* All bridges, wharves, and other structures in or over the waterways described in paragraph (a)(1) of this section.

(3) *Vessels and rafts.* The term ''vessels'' as used in this section includes every description of watercraft used, or capable of being used, as a means of transportation on water, other than rafts.

(b) Waterways:

(1) *Fairway.* A clear channel shall at all times be left open to permit free and unobstructed navigation by all types of vessels and rafts that normally use the various waterways or sections thereof. The District Commander may specify the width of the fairway required in the waterways under his charge.

(2) *Anchoring or mooring in waterway.* (i) No vessels or rafts shall anchor or moor in any of the land cuts or other narrow parts of the waterway, except in an emergency. Whenever it becomes necessary for a vessel or raft to stop in any such portions of the waterway, it shall be securely fastened to one bank and as close to the bank as possible. This shall be done only at such a place and under such conditions as will not obstruct or prevent the passage of other vessels or rafts. Stoppages shall be only for such periods as may be necessary.

(ii) Except temporarily, as authorized in paragraph (b)(2)(i) of this section, no vessel or raft will be allowed to use any portion of the fairway as a mooring place without written permission from the District Commander.

(iii) When tied up individually, all vessels shall be moored by bow and stern lines. Rafts and tows shall be secured at sufficiently close intervals to insure their not being drawn away from the bank by winds, currents, or the suction of passing vessels. Towlines shall be shortened so that the different parts of the tow will be as close together as possible. In narrow sections, no vessel or raft shall be tied abreast of another if the combined width of vessels or rafts is greater than 70 feet.

(iv) When a vessel is moored under an emergency condition, as provided in paragraph (b)(2)(i) of this section, at least one crew member shall remain in attendance to display proper lights and signals and tend the mooring lines. The crew member shall be provided with an adequate means of communication or signalling a warning in the event that, for any reason, the vessel or tow should go adrift. Immediately after completion of the emergency mooring, the lockmaster of the first lock downstream shall be notified of the character and cargo of the vessel and the location of such mooring.

(v) Vessels will not be permitted to load or unload in any of the land cuts, except at a regular established landing or wharf, without written permission secured in advance from the District Commander.

(vi) Except in an emergency, no vessel or raft shall anchor over revetted banks of the waterway, nor shall any type vessel except launches and other small craft land against banks protected by revetment except at regular commercial landings.

(3) *Speed*. (i) Excessive speed in narrow sections is prohibited. Official signs indicating limiting speeds through critical sections shall be strictly obeyed.

(ii) When approaching and passing through a bridge, all vessels and rafts, regardless of size, shall control their speed so as to insure that no damage will be done to the bridge or its fenders.

(iii) Within the last mile of approach to unattended, normally open automatic, movable span bridges, the factor of river flow velocity, of vessel (and tow) velocity, and of vessel power and crew capability are never to be permitted to result in a condition whereby the movement of vessel (and tow) cannot be completely halted or reversed within a 3-minute period.

(iv) A vessel shall reduce its speed sufficiently to prevent any damage when approaching another vessel in motion or tied up, a wharf or other structure, works under construction, plant engaged in river and harbor improvement, levees withstanding floodwaters, buildings submerged or partially submerged by high waters, or any other manner of structure or improvements likely to be damaged by collision, suction, or wave action.

(4) *Assembly and handling of tows*. (i) All vessels drawing tows not equipped with rudders in restricted channels and land cuts shall use two towlines, or a bridle on one towline, shortened to the greatest possible extent so as to have maximum control at all times. The various parts of a tow shall be securely assembled with the individual units connected by lines as short as practicable. In open water, the towlines and fastenings between barges may be lengthened so as to accommodate the wave surge. In the case of length or cumbersome tows, or tows in restricted channels, the District Commander may require that tows be broken up, and may require the installation of a rudder or other approved steering device on the tow in order to avoid obstructing navigation or damaging the property of others. Pushing barges with towing vessel astern, towing barges with towing vessel alongside, or pushing and pulling barges with units of the tow made up both ahead and astern of the towing vessel is permissible provided that adequate power is employed to keep the tow under full control at all times.

(ii) No tow shall be drawn by a vessel that has insufficient power or crew to permit ready maneuverability and safe handling.

(iii) No vessel or tow shall navigate through a drawbridge until the movable span is fully opened.

(5) *Projections from vessels*. No vessels carrying a deck load which overhangs or projects over the side, or whose rigging projects over the side, so as to endanger passing vessels, wharves, or other property, shall enter or pass through any of the narrow parts of the waterway.

(6) *Meeting and passing*. Vessels on meeting or overtaking shall give the proper signals and pass in accordance with the Inland Rules and the Pilot Rules for Inland Waters. Rafts shall give to vessels the side demanded by proper signal. All vessels approaching dredges or other plant engaged on improvements to a waterway shall give the signal for passing and slow down sufficiently to stop if so ordered or if

no answering signal is received. On receiving the answering signal, they shall then pass at a speed sufficiently slow to insure safe navigation. Vessels approaching an intersection or bend where the view is obstructed must exercise due caution. At certain intersections where strong currents may be encountered, sailing directions may be issued from time to time through navigation bulletins or signs posted on each side of the intersections which must be observed.

NOTE: The Corps of Engineers also has regulations dealing with this section in 33 CFR Part 207.

[CGD 75–082, 42 FR 51759, Sept. 29, 1977, as amended by USCG–2008–0179, 73 FR 35016, June 19, 2008]

§ 162.100 Ohio River at Louisville, KY.

(a) *Emergency Mooring Buoys.* The U.S. Army Corp of Engineers has established four pairs of emergency mooring bouys. Each buoy is 10 feet in diameter with retro-reflective sides. The two buoys which comprise each pair are 585 feet apart and are located approximately at:

(1) Indiana Bank—Mile 582.3 (near 18 Mile Island);

(2) Six Mile Island—Mile 597.5;

(3) Six Mile Island—Mile 598.2; and

(4) Kentucky Bank—Mile 599.8 (Cox's Park).

NOTE: All buoys, except those at Six Mile Island—Mile 598.2, are removed between May 1 and September 30. Due to the close proximity of the municipal water intakes, mooring of tank vessels laden with petroleum products or hazardous materials is not authorized on the Kentucky Bank, Mile 599.8 (Cox's Park).

(b) *The regulations.* A vessel must not use the emergency mooring buoys that have been established by the U.S. Army Corps of Engineers, unless specifically authorized. The Captain of the Port, upon request, may authorize the use of the emergency mooring buoys by downbound towing vessels that are awaiting Vessel Traffic Center approval to proceed.

[CGD 90–020, 59 FR 36333, July 15, 1994]

§ 162.105 Missouri River; administration and navigation.

(a) *Supervision.* The District Commander, Eighth Coast Guard District, has certain administrative supervision overreaches of the river within the limits of his district and is charged with the enforcement under his direction of emergency regulations to govern navigation on the river.

(b) *Navigation.* During critical flood stages on any particular limited reach of the Missouri River when lives, floating plant, or major shore installations and levees are endangered, the District Commander in charge of the locality shall have the authority to declare the reach of the river closed to navigation or to prescribe temporary speed regulations whenever it appears to him that such action is necessary to prevent immediate human suffering or to mitigate major property damage or destruction from wave action. The period of closure and all speed regulations prescribed by the District Commander shall be for the duration of the emergency as determined by the District Commander and shall be terminated at the earliest practicable time that improved river conditions permit.

[CGD 75–082, 42 FR 51759, Sept. 29, 1977, as amended by USCG–1998–3799, 63 FR 35532, June 30, 1998]

§ 162.110 Duluth-Superior Harbor, Minnesota and Wisconsin.

(a) No vessel greater than 100 feet in length may exceed 8 miles per hour in Duluth-Superior Harbor.

(b) In the Duluth Ship Canal:

(1) No vessel may meet or overtake another vessel if each vessel is greater than 150 feet in length (including tug and tow combinations).

(2) An inbound vessel has the right of way over an outbound vessel.

[CGD 79–151, 46 FR 7960, Jan. 26, 1981]

§ 162.115 Keweenaw Waterway, Mich.

No vessel greater than 40 feet in length may exceed 8 miles per hour between Lily Pond and Pilgrim Point.

[CGD 79–151, 46 FR 7960, Jan. 26, 1981, as amended by CGD 09–00–010, 65 FR 53595, Sept. 5, 2000]

§ 162.117 St. Marys River, Sault Ste. Marie, Michigan.

(a) *The area.* The waters of the St. Marys River and lower Whitefish Bay from 45°57′ N. (De Tour Reef Light) to the south, to 46°38.7′ N. (Ile Parisienne Light) to the north, except the waters of the St. Marys Falls Canal, and to the east along a line from La Pointe to Sims Point, within Potagannissing Bay and Worsley Bay.

(b) *Definitions.* As used in this section:

Two-way route means a directional route within defined limits inside which two-way traffic is established, and which is intended to improve safety in waters where navigation is difficult.

Two-way traffic means that traffic flow is permitted in opposing directions, but a vessel may not meet, cross, nor overtake any other vessel in such a manner that it would be abreast of more than one other vessel within the defined limits of a waterway.

(c) Anchoring Rules.

(1) A vessel must not anchor:

(i) within the waters between Brush Point and the waterworks intake crib off Big Point southward of the Point Aux Pins range; or

(ii) within 0.2 nautical miles of the intake crib off Big Point.

(2) In an emergency, vessels may anchor in a dredged channel. Vessels shall anchor as near to the edge of the channel as possible and shall get underway as soon as the emergency ceases, unless otherwise directed. Vessel Traffic Services St. Marys River must be advised of any emergency anchoring as soon as is practicable.

(3) Vessels collected in any part of the VTS Area by reason of temporary closure of a channel or an impediment to navigation shall get underway and depart in the order in which they arrived, unless otherwise directed by Vessel Traffic Service St. Marys River. Vessel Traffic Service St. Marys River may advance any vessel in the order of departure to expedite the movement of mails, passengers, cargo of a perishable nature, to facilitate passage of vessels through any channel by reason of special circumstance, or to facilitate passage through the St. Marys Falls Canal.

(d) *Traffic Rules.* (1) A vessel must proceed only in the established direction of traffic flow in the following waters:

(i) West Neebish Channel from Buoy ''53'' to Buoy ''1''—downbound traffic only;

(ii) Pipe Island Course from Sweets Point to Watson Reefs Light-downbound traffic only.

(iii) Middle Neebish Channel from Buoy ''2'' to Buoy ''76''—upbound traffic only; and

(iv) Pipe Island Passage to the east of Pipe Island Shoal and north of Pipe Island Twins from Watson Reefs Light to Sweets Point—upbound traffic only.

(2) A vessel 350 feet or more in length must not overtake or approach within .2 nautical miles of another vessel proceeding in the same direction in the following waterways:

(i) West Neebish Channel between Nine Mile Point and Munuscong Lake Junction Lighted Bell Buoy;

(ii) Middle Neebish Channel between Munuscong Lake Junction Lighted Bell Buoy and Nine Mile Point; and

(iii) Little Rapids Cut from Six Mile Point to Buoy ''102''.

(3) When two-way traffic is authorized in Middle Neebish Channel, a vessel 350 feet or more in length must not meet, cross, or overtake another vessel at:

(i) Johnson Point from Buoy ''18'' to Buoy ''22'';

(ii) Mirre Point from Buoy ''26'' to Buoy ''28''; or

(iii) Stribling Point from Buoy ''39'' to Buoy ''43''.

(4) Paragraph (d)(2) of this section does not apply to a vessel navigating through an ice field.

(e) *Winter Navigation.* During the winter navigation season, the following waterways are normally closed:

(1) West Neebish Channel, from Buoy ''53'' to Buoy ''1'';

(2) Pipe Island Passage to the east of Pipe Island Shoal; and

(3) North of Pipe Island Twins, from Watson Reef Light to Sweets Point.

(f) *Alternate Winter Navigation Routes.* (1) When West Neebish Channel is closed, Middle Neebish Channel (from Buoy ''2'' to Buoy ''76'') will be open either as a two-way route or an alternating one way traffic lane.

(i) When Middle Neebish Channel is a two-way route:

(A) An upbound vessel must use the easterly 197 feet of the channel. However, a vessel of draft 20 feet or more must not proceed prior to Vessel Traffic Center approval; and

(B) A downbound vessel must use the westerly 295 feet of the channel.

(ii) When Middle Neebish Channel is an alternating one-way traffic lane. A vessel must use the westerly 295 feet of the channel in the established direction of traffic flow.

(2) When Pipe Island Passage is closed, Pipe Island Course is a two-way route.

NOTE: The Vessel Traffic Service closes or opens these channels as ice conditions require after giving due consideration to the protection of the marine environment, waterway improvements, aids to navigation, the need for cross channel traffic (e.g., ferries), the availability of icebreakers, and the safety of the island residents who, in the course of their daily business, must use naturally formed ice bridges for transportation to and from the mainland. Under normal seasonal conditions, only one closing each winter and one opening each spring are anticipated. Prior to closing or opening these channels, interested parties including both shipping entities and island residents, will be given at least 72 hours notice by the Coast Guard.

(g) *Speed Rules*. (1) The following speed limits indicate speed over the ground. Vessels must adhere to the following speed limits:

TABLE 162.117(g)—ST. MARYS RIVER SPEED RULES

Maximum speed limit between	Mph	Kts
De Tour Reef Light and Sweets Point Light	14	12.2
Round Island Light and Point Aux Frenes Light "21"	14	12.2
Munuscong Lake Lighted Buoy "8" and Everens Point	12	10.4
Everens Point and Reed Point	9	7.8
Reed Point and Lake Nicolet Lighted Buoy "62"	10	8.7
Lake Nicolet Lighted Buoy "62" and Lake Nicolet Light "80"	12	10.4
Lake Nicolet Light "80" and Winter Point (West Neebish Channel)	10	8.7
Lake Nicolet Light "80" and Six Mile Point Range Rear Light	10	8.7
Six Mile Point Range Rear Light and lower limit of the St. Marys Falls Canal		
Upbound	8	7.0
Downbound	10	8.7

TABLE 162.117(g)—ST. MARYS RIVER SPEED RULES—Continued

Maximum speed limit between	Mph	Kts
Upper limit of the St. Marys Falls Canal and Point Aux Pins Main Light	12	10.4

Note: A vessel must not navigate any dredged channel at a speed of less than 5 statute miles per hour (4.3 knots).

(2) Temporary speed limit regulations may be established by Commanding Officer Vessel Traffic Service St. Marys River. Notice of the temporary speed limits and their effective dates and termination are published in the FEDERAL REGISTER and Local Notice to Mariners. These temporary speed limits, if imposed, will normally be placed in effect and terminated during the winter navigation season.

(h) *Towing Requirement*. A towing vessel must: (1) Maintain positive control of its tow south of Gros Cap Reef Light;

(2) Not impede the passage of any other vessel;

(3) Not tow a vessel of 200 feet or less in length with a tow line longer than 250 feet; and

(4) Not tow a vessel of 200 feet or more in length with a tow line longer than the length of the towed vessel plus 50 feet.

[CGD 90–020, 59 FR 36333, July 15, 1994, as amended by CGD 95–033, 60 FR 28333, May 31, 1995; USCG–1998–3799, 63 FR 35532, June 30, 1998; USCG–2003–15404, 68 FR 37741, June 25, 2003]

§ 162.120 Harbors on Lake Michigan.

(a) No vessel greater than 40 feet in length may exceed 8 miles per hour in the harbors of Michigan City, Indiana; St. Joseph, South Haven, Saugatuck, Holland (Lake Macatawa), Grand Haven, Muskegon, White Lake, Pentwater, Ludington, Manistee, Portage Lake (Manistee County), Frankfort, Charlevoix, and Petoskey, Michigan.

(b) No vessel greater than 40 feet in length may exceed 4 miles per hour in the harbors of Menominee, Michigan and Wisconsin; Algoma, Kewaunee, Two Rivers, Manitowac, Sheboygan, Port Washington, Milwaukee, Racine, Kenosha and Green Bay, Wisconsin; and Waukegan, Illinois.

[CGD 79–151, 46 FR 7960, Jan. 26, 1981, as amended by USCG–2012–0306, 77 FR 37315, June 21, 2012]

§ 162.125 Sturgeon Bay and the Sturgeon Bay Ship Canal, Wisc.

(a) In the Sturgeon Bay Ship Canal:

(1) No vessel may exceed 5 miles per hour.

(2) No vessel greater than 150 feet in length (including tug and tow combinations) may come about.

(3) No vessel 65 feet or greater in length (including tug and tow combinations) may either:

(i) Enter or pass through the canal two or more abreast; or

(ii) Overtake another vessel.

(4) No vessel may anchor or moor unless given permission to do so by the Captain of the Port.

(5) Each vessel must keep to the center, except when meeting or overtaking another vessel.

(b) In Sturgeon Bay and the Sturgeon Bay Ship Canal:

(1) Each laden vessel under tow must be towed with at least two towlines. Each towline must be shortened to the extent necessary to provide maximum control of the tow.

(2) Each unladen vessel may be towed with one towline.

(3) No towline may exceed 100 feet in length.

(4) No vessel may tow another vessel alongside.

(5) No vessel may tow a raft greater than 50 feet in width.

NOTE: The Corps of Engineers also has regulations dealing with these areas in 33 CFR Part 207.

[CGD 79–151, 46 FR 7960, Jan. 26, 1981]

§ 162.130 Connecting waters from Lake Huron to Lake Erie; general rules.

(a) *Purpose*. The regulations in §§ 162.130 through 162.140 prescribe rules for vessel operation in U.S. waters connecting Lake Huron to Lake Erie (including the River Rouge) to prevent collisions and groundings, to protect waterway improvements, and to protect these waters from environmental harm resulting from collisions and groundings.

NOTE: The Canadian Government has issued similar regulations which apply in the Canadian portion of the waterway. Provisions which apply only in Canadian waters are noted throughout the text.

(b) *Applicability*. (1) Unless otherwise specified, the rules in §§ 162.130 through 162.140 apply to all U.S. vessels and all other vessels in U.S. waters.

(2) The speed rules in § 162.138 apply to vessels 20 meters or more in length.

(3) The communication rules in § 162.132, the traffic rules in § 162.134, except for § 162.134(c)(2), and the anchorage rules in § 162.136 apply to the following vessels:

(i) Vessels of 20 meters or more in length;

(ii) Commercial vessels more than 8 meters in length engaged in towing another vessel astern, alongside, or by pushing ahead; and

(iii) Each dredge and floating plant.

(4) The traffic rules contained in § 162.134(c)(2) apply to the following vessels:

(i) Sailing vessels of 20 meters or more in length;

(ii) Power driven vessels of 55 meters or more in length;

(iii) Vessels engaged in towing another vessel astern, alongside or by pushing ahead; and

(iv) Each dredge and floating plant.

(c) *Definitions*. As used in §§ 162.130 through 162.140:

Captain of the Port means the United States Coast Guard Captain of the Port of Detroit, Michigan.

Detroit River means the connecting waters from Windmill Point Light to the lakeward limits of the improved navigation channels at the head of Lake Erie.

District Commander means Commander, Ninth Coast Guard District, Cleveland, Ohio.

Master means the master or operator, the person designated by the master or operator to navigate the vessel, or, on a vessel not requiring persons holding licenses or merchant mariner credential officer endorsements, the person in command of the vessel.

River Rouge means the waters of the Short Cut Canal and the River Rouge from Detroit Edison Cell Light 1 to the head of navigation.

St. Clair River means the connecting waters from the lakeward limit of the improved navigation channel at the lower end of Lake Huron to St. Clair Flats Canal Light 2.

SARNIA TRAFFIC means the Canadian Coast Guard traffic center at Sarnia Ontario.

(d) *Laws and regulations not affected.* The regulations in §§162.130 through 162.140 do not relieve the owners or operators of vessels from complying with any other laws or regulations relating to navigation on the Great Lakes and their connecting or tributary waters.

(e) *Delegations.* The District Commander, in coordination with appropriate Canadian officials, may make local arrangements that do not conflict with these regulations in the interest of safety of operations, to facilitate traffic movement and anchorage, to avoid disputes as to jurisdiction and to take necessary action to render assistance in emergencies. This authority may be redelegated.

[CGD 78–151, 49 FR 18301, Apr. 30, 1984; 49 FR 26722, June 29, 1984, as amended by CGD 85–060, 51 FR 17016, May 8, 1986; CGD 93–024, 58 FR 59365, Nov. 9, 1993; USCG–2006–24371, 74 FR 11213, Mar. 16, 2009]

§ 162.132 Connecting waters from Lake Huron to Lake Erie; communications rules.

(a) *Radio listening watch.* The master of each vessel required to comply with this section shall continuously monitor:

(1) Channel 11 (156.55 mhz) between Lake Huron Cut Lighted Buoy 11 and Lake St. Clair Light; and

(2) Channel 12 (156.60 mhz) between Lake St. Clair Light and Detroit River Light.

(b) *Radiotelephone equipment.* Reports required by this section shall be made by the master using a radiotelephone capable of operation on a vessel's navigation bridge, or in the case of a dredge, from its main control station.

(c) *English language.* Reports required by this section shall be made in the English language.

(d) *Traffic reports.* (1) Reports required by this section shall be made to SARNIA TRAFFIC on the frequency designated for the radio listening watch in paragraph (a) of this section.

(2) Reports shall include the name of the vessel, location, intended course of action, and ETA at next reporting point.

(e) *Permanent reporting points.* The master of each vessel to which this section applies shall report as required by paragraph (d) of this section at the location indicated in Table I.

TABLE I

Downbound vessels	Reporting points	Upbound vessels
Report	30 Minutes North of Lake Huron Cut.	
	Lighted Horn Buoy "11"	
Report	Lake Huron Cut Light "7"	
	Lake Huron Cut Lighted Buoy "1".	Report.
Report	St. Clair/Black River Junction Light.	Report.
	Stag Island Upper Light	Report.
Report	Marine City Salt Dock Light	Report.
Report	Grande Pointe Light "23"	
	St. Clair Flats Canal Light "2"	Report.
Report	Lake St. Clair Light	Report.
Report	Belle Isle Light	
Report	Grassy Island Light	Report.
Report	Detroit River Light	Report.

(f) *Additional traffic reports.* (1) A report shall be made upon leaving any dock, mooring, or anchorage, in the Detroit River, Lake St. Clair, and the St. Clair River except for—

(i) Ferries on regular runs; and

(ii) Vessels in the River Rouge.

(2) A report shall be made before maneuvering to come about.

(3) A report shall be made—

(i) 20 minutes before entering or departing the River Rouge; and

(ii) Immediately before entering or departing the River Rouge.

(g) *Report of impairment or other hazard.* The master of a vessel shall report to SARNIA TRAFFIC as soon as possible:

(1) Any condition on the vessel that may impair its navigation, including but not limited to: fire, defective steering equipment, or defective propulsion machinery.

(2) Any tow that the towing vessel is unable to control, or can control only with difficulty.

(h) *Exemptions.* Compliance with this section is not required when a vessel's radiotelphone equipment has failed.

[CGD 78–151, 49 FR 18301, Apr. 30, 1984; 49 FR 26722, June 29, 1984, as amended by CGD 85–060, 51 FR 17016, May 8, 1986; CGD 85-060, 51 FR 37274, Oct. 21, 1986]

§ 162.134 Connecting waters from Lake Huron to Lake Erie; traffic rules.

(a) *Detroit River*. The following traffic rules apply in the Detroit River:

(1) The West Outer Channel is restricted to downbound vessels.

(2) The Livingston Channel, west of Bois Blanc Island, is restricted to downbound vessels.

NOTE: The Amherstburg Channel, in Canadian waters east of Bois Blanc Island, is normally restricted to upbound vessels. No vessel may proceed downbound in the Amherstburg Channel without authorization from the Regional Director General.

(3) Between Fighting Island Channel South Light and Bar Point Pier Light 29D, no vessels shall meet or overtake in such a manner that more than two vessels would be abreast at any time.

(4) Between the west end of Belle Isle and Peche Island Light, vessels may only overtake vessels engaged in towing.

(b) *River Rouge*. In the River Rouge, no vessel shall overtake another vessel.

(c) *St. Clair River*. The following traffic rules apply in the St. Clair River:

(1) Between St. Clair Flats Canal Light 2 and Russell Island Light 33, vessels may only overtake vessels engaged in towing.

(2) Between Lake Huron Cut Lighted Buoy 1 and Port Huron Traffic Lighted Buoy there is a zone of alternating one way traffic. Masters shall coordinate their movements in accordance with the following rules;

(i) Vessels shall not overtake.

(ii) Vessels shall not come about.

(iii) Vessels shall not meet.

(iv) Downbound vessels which have passed Lake Huron Cut Lighted Buoy 7 have the right of way over upbound vessels which have not reached the Port Huron Traffic Lighted Buoy. Upbound vessels awaiting transit of downbound vessels will maintain position south of the Port Huron Traffic Lighted Buoy.

(v) Vessels transiting the zone shall coordinate passage by using communication procedures in § 162.132.

(vi) Transiting vessels shall have the right of way over moored vessels getting underway within the zone.

(d) In the waters described in § 162.130(a), the District Commander or Captain of the Port may establish temporary traffic rules for reasons which include but are not limited to: channel obstructions, winter navigation, unusual weather conditions, or unusual water levels.

(e) The requirements of this section do not apply to public vessels of the U.S. or Canada engaged in icebreaking or servicing aids to navigation or to vessels engaged in river and harbor improvement work.

(f) The prohibitions in this section on overtaking in certain areas do not apply to vessels operating in the nondisplacement mode. In this section, ''nondisplacement mode'' means a mode of operation in which the vessel is supported by hydrodynamic forces, rather than displacement of its weight in the water, to an extent such that the wake which would otherwise be generated by the vessel is significantly reduced.

[CGD 78–151, 49 FR 18302, Apr. 30, 1984; 49 FR 26722, June 29, 1984, as amended by CGD 09–95–002, 60 FR 35701, July 11, 1995]

§ 162.136 Connecting waters from Lake Huron to Lake Erie; anchorage grounds.

(a) In the Detroit River, vessels shall be anchored so as not to swing into the channel or across steering courses.

NOTE: There is an authorized anchorage in Canadian waters just above Fighting Island and an authorized anchorage in U.S. waters south of Belle Isle (33 CFR 110.206).

(b) In the St. Clair River, vessels shall be anchored so as not to swing into the channel or across steering courses.

[CGD 78–151, 49 FR 18302, Apr. 30, 1984, as amended by CGD 85–060, 51 FR 17016, May 8, 1986]

§ 162.138 Connecting waters from Lake Huron to Lake Erie; speed rules.

(a) *Maximum speed limit for vessels in normal displacement mode*. (1) Except when required for the safety of the vessel or any other vessel, vessels of 20 meters or more in length operating in normal displacement mode shall proceed at a speed not greater than—

(i) 12 statute miles per hour (10.4 knots) between Fort Gratiot Light and St. Clair Flats Canal Light 2;

(ii) 12 statute miles per hour (10.4 knots) between Peche Island Light and D33 stationary light in the Detroit River entrance; and

(iii) 4 statute miles per hour (3.5 knots) in the River Rouge.

(2) The maximum speed limit is 5.8 statute miles per hour (5 knots) in the navigable channel south of Peche Island (under Canadian jurisdiction).

(b) *Maximum speed limit for vessels operating in nondisplacement mode.* (1) Except when required for the safety of the vessel or any other vessel, vessels 20 meters or more in length but under 100 gross tons operating in the nondisplacement mode and meeting the requirements set out in paragraph (c) of this section, may operate at a speed not exceeding 40 miles per hour (34.8 knots)—

(i) During daylight hours (sunrise to sunset);

(ii) When conditions otherwise safely allow; and

(iii) When approval has been granted by the Coast Guard Captain of the Port, Detroit or Commander of the Ninth Coast Guard District prior to each transit of the area.

(2) In this section, ''nondisplacement mode'' means a mode of operation in which the vessel is supported by hydrodynamic forces, rather than displacement of its weight in the water, to an extent such that the wake which would otherwise be generated by the vessel is significantly reduced.

(c) *Unsafe vessels.* The Captain of the Port or the District Commander may deny approval for operations under paragraph (b) of this section if it appears that the design and operating characteristics of the vessels in question are not safe for the designated waterways, or if it appears that operations under this section have become unsafe for any reason.

(d) *Temporary speed limits.* The District Commander may temporarily establish speed limits or temporarily amend existing speed limit regulations on the waters described in § 162.130(a).

[CGD 09–95–002, 60 FR 35702, July 11, 1995, as amended by USCG–2011–1086, 77 FR 62437, Oct. 15, 2012]

§ 162.140 Connecting waters from Lake Huron to Lake Erie; miscellaneous rules.

(a) *Rules for towing vessels.* (1) A towing vessel may drop or anchor its tows only in accordance with the provisions of § 162.136.

(2) A towing vessel engaged in arranging its tow shall not obstruct the navigation of other vessels.

(b) *Pilots.* In the St. Clair River between Lake Huron Cut Lighted Buoy 1 and Port Huron Traffic Lighted Buoy, vessels shall not take on, discharge, or exchange pilots unless weather conditions would make the maneuver unsafe in the customary pilot area.

[CGD 78–151, 49 FR 18302, Apr. 30, 1984]

§ 162.145 Monroe Harbor, Mich.

(a) In the lake channel, no vessel greater than 40 feet in length may exceed 10 miles per hour.

(b) In the river channel:

(1) No vessel greater than 40 feet in length may exceed 6 miles per hour.

(2) No vessel may use a towline exceeding 200 feet in length.

[CGD 79–151, 46 FR 7960, Jan. 26, 1981]

§ 162.150 Maumee Bay and River, Ohio.

(a) In Maumee Bay (lakeward of Maumee River Lighted Buoy 49(L/L No. 770)), no vessel greater than 100 feet in length may exceed 12 miles per hour.

(b) In Maumee River (inward of Maumee River Lighted Buoy 49(L/L No. 770)):

(1) No vessel greater than 40 feet in length may exceed 6 miles per hour.

(2) No vessel greater than 100 feet in length (including tug and tow combinations) may overtake another vessel.

[CGD 79–151, 46 FR 7960, Jan. 26, 1981]

§ 162.155 Sandusky and Huron Harbors, Ohio.

(a) In Sandusky Harbor, no vessel greater than 40 feet in length may exceed 10 miles per hour.

(b) In Huron Harbor, no vessel greater than 40 feet in length may exceed 6 miles per hour, except in the outer harbor where no vessel greater than 40 feet in length may exceed 10 miles per hour.

NOTE: The Corps of Engineers also has regulations dealing with these areas in 33 CFR Part 207.

[CGD 79–151, 46 FR 7960, Jan. 26, 1981]

§ 162.160 Vermilion, Lorain, Cleveland, Fairport, Ashtabula, and Conneaut Harbors, Ohio.

(a) In Vermilion Harbor, no vessel may exceed 6 miles per hour.

(b) In Lorain, Cleveland, Fairport, Ashtabula, and Conneaut Harbors, no vessel may exceed 6 miles per hour, except in the outer harbors, where no vessel may exceed 10 miles per hour.

NOTE: The Corps of Engineers also has regulations dealing with these areas in 33 CFR Part 207.

[CGD 79–151, 46 FR 7960, Jan. 26, 1981]

§ 162.165 Buffalo and Rochester Harbors, New York.

In Buffalo and Rochester Harbors, no vessel may exceed 6 miles per hour, except in the outer harbors where no vessel may exceed 10 miles per hour.

NOTE: The Corps of Engineers also has regulations dealing with these areas in 33 CFR Part 207.

[CGD 79–151, 46 FR 7960, Jan. 26, 1981]

§ 162.175 Black Rock Canal and Lock at Buffalo, New York.

In the Black Rock Canal and Lock, no vessel may exceed 6 miles per hour.

NOTE: The Corps of Engineers also has regulations dealing with these areas in 33 CFR Part 207.

[CGD 79–151, 46 FR 7960, Jan. 26, 1981]

§ 162.195 Santa Monica Bay, Calif.; restricted area.

(a) *The area.* The waters of the Pacific Ocean, Santa Monica Bay, in an area extending seaward from the shoreline a distance of about 5 nautical miles (normal to the shoreline) and basically outlined as follows:

Station	Latitude North	Longitude West
A	33°54′59″	118°25′41″
B	33°54′59″	118°28′00″
C	33°53′59.5″	118°31′37″
D	33°56′19.5″	118°34′05″
E	33°56′25″	118°26′29″

(b) *The regulations.* (1) Vessels shall not anchor within the area at any time without permission.

(2) Dredging, dragging, seining, or other fishing operations which might foul underwater installations within the area are prohibited.

(3) All vessels entering the area, other than vessels operated by or for the United States, the State of California, the county of Los Angeles, or the city of Los Angeles, shall proceed across the area by the most direct route and without unnecessary delay. The area will be open and unrestricted to small recreational craft for recreational activities at all times.

(4) The placing of bouys, markers, or other devices requiring anchors will not be permitted.

(5) The city of Los Angeles will maintain a patrol of the area as needed.

§ 162.200 Marina del Rey, Calif.; restricted area.

(a) *The area.* That portion of the Pacific Ocean lying shoreward of the offshore breakwater and the most seaward 1,000 feet of the entrance channel between the north and south jetties, and basically outlined as follows:

Station	Latitude North	Longitude West
A	33°57′46.0″	118°27′39.5″
B	33°57′52.3″	118°27′43.6″
C	33°57′48.6″	118°27′48.8″
D	33°57′29.8″	118°27′34.7″
E	33°57′30.9″	118°27′29.1″
F	33°57′37.4″	118°27′33.8″
G	33°57′42.4″	118°27′23.0″
H	33°57′50.6″	118°27′28.3″

(b) *The regulations.* (1) Vessels shall not anchor within the area at any time without permission except in an emergency.

(2) Dredging, dragging, seining, or other fishing operations which might foul underwater installations within the area are prohibited.

[CGD 75–082, 42 FR 51759, Sept. 29, 1977, as amended by USCG–2008–0179, 73 FR 35016, June 19, 2008]

NOTE: The Corps of Engineers also has regulations dealing with this section in 33 CFR Part 207.

§ 162.205 Suisun Bay, San Joaquin River, Sacramento River, and connecting waters, CA.

(a) *San Joaquin River Deep Water Channel between Suisun Bay and the easterly end of the channel at Stockton; use, administration and navigation*—(1) *Maximum speed*. The maximum speed for all ocean-going craft shall not exceed 10 miles per hour above the lower end of New York Slough, seven miles per hour above Criminal Point, or five miles per hour while passing any wharf, dock, or moored craft. As used in this paragraph, the speed of a vessel when navigating with the current shall be its rate of movement in excess of the velocity of the current.

(2) *Passing*. All craft passing other boats, barges, scows, etc., in motion, moored or anchored, shall slow down and take every necessary precaution to avoid damage.

(3) *Right of way*. (i) United States dredges, tugs, launches, derrick boats, and similar plant of contractors executing river and harbor improvement work for the United States, and displaying the signals prescribed by the regulations contained in part 80 of this chapter shall have the right of way and other craft shall exercise special caution to avoid interference with the work on which the plant is engaged. Dredges, whether Federal or contractors' plant, working the channel must however, take special care to give ocean-going vessels sufficient room for passing, and must lift both spuds and the ladder, and pull clear, if an adequate width of clear channelway cannot otherwise be provided. Ocean-going vessels may show at the masthead a black ball not more than 20 inches in diameter as a signal to the dredge, and may also blow five long blasts of the whistle when within reasonable hearing distance of the dredge, such signal to be followed at the proper time by the passing signal described in the local pilot rules. The dredge shall promptly acknowledge both signals in the usual manner.

(ii) Light-draft vessels when meeting or being overtaken by ocean-going vessels, shall give the right of way to such vessels by making use of the shallower portions of the waterway.

(iii) Rafts and tows must promptly give the channel side demanded upon proper signal by a vessel, and must be handled in such a manner as not to obstruct or interfere with the free use of the waterway by other craft.

(4) *Collisions*. (i) Ocean-going vessels in collision in the channel or turning basin must, if still afloat and in a condition making anchorage necessary, be immediately removed to an approved anchorage ground, or if in such condition that beaching is necessary, they shall be temporarily beached on the northwest side of Mandeville Island or in the Old River.

(ii) Light-draft vessels suffering collision shall be disposed of as directed by the District Commander or his authorized representative.

(5) *Wrecks*. In no case following accidents of fire or collision will a vessel be allowed to remain either anchored or grounded in the channel, or beached at any place where it endangers other vessels, while settlement is pending with the underwriters.

(6) *Other laws and regulations*. In all other respects, the existing Federal laws and rules and regulations affecting navigable waters of the United States will govern in this channel.

(b) *Sacramento Deep Water Ship Channel between Suisun Bay and easterly end of Turning Basin at West Sacramento; use, administration, and navigation*—(1) *Maximum speed for all ocean going craft*—(i) *Between Tolands Landing (Mile 6.2) and Rio Vista Bridge*. When going against a current of two knots or more, the maximum speed over the bottom shall not exceed 8 knots. When going with the current, in slack water, or against a current of two knots or less, the maximum speed through the water shall not exceed 10 knots.

(ii) *Between Rio Vista Bridge and Port of Sacramento*. When going against a current of two knots or more, the maximum speed over the bottom shall not exceed 5 knots. When going with the current, in slack water, or against a current of two knots or less, the maximum speed through the water shall not exceed 7 knots.

(iii) *Speed past docks or moored craft*. Within 550 feet of the centerline of the

channel the speed shall be the minimum required to maintain steerageway; wind, tide, current, etc., being taken into consideration.

(iv) *Passing.* All craft passing other boats, barges, scows, etc., underway, moored or anchored, shall take every necessary precaution to avoid damage.

(v) *Speed, high-water precautions.* When passing another vessel (underway, anchored, or tied up); a wharf or other structure; work under construction; plant engaged in river and harbor improvement; levees withstanding flood waters; buildings partially or wholly submerged by high water; or any other structure liable to damage by collision, suction or wave action; vessels shall give as much leeway as circumstances permit and reduce their speed sufficiently to preclude causing damage to the vessel or structure being passed. As deemed necessary for public safety during high river stages, floods, or other emergencies, the District Commander may prescribe, by navigation bulletins or other means, the limiting speed in knots or temporarily close the waterway or any reach of it to traffic. Since this subparagraph pertains directly to the manner in which vessels are operated, masters of vessels shall be held responsible for strict observance and full compliance herewith.

(2) *Right of way.* (i) Dredges, tugs, launches, derrick boats and other similar equipment, executing river and harbor improvement work for the United States, and displaying the signals prescribed by the regulations contained in part 80, of this Chapter, shall have the right-of-way and other craft shall exercise special caution to avoid interference with the work on which the plant is engaged. Dredges, whether Federal or contractor's plant, working the channel must however, take special care to give ocean-going vessels sufficient room for passing, and must lift both spuds and the ladder, and pull clear, if an adequate width of clear channelway cannot otherwise be provided.

(ii) Vessels intending to pass dredges or other types of floating plant working in navigable channels, when within a reasonable distance therefrom and not in any case over a mile, shall indicate such intention by one long blast of the whistle, and shall be directed to the proper side for passage by the sounding, by the dredge or other floating plant, of the signal prescribed in the inland pilot rules for vessels underway and approaching each other from opposite directions, which shall be answered in the usual manner by the approaching vessel. If the channel is not clear, the floating plant shall sound the alarm or danger signal and the approaching vessel shall slow down or stop and await further signal from the plant.

(iii) When the pipeline from a dredge crosses the channel in such a way that an approaching vessel cannot pass safely around the pipeline or dredge, there shall be sounded immediately from the dredge the alarm or danger signal and the approaching vessel shall slow down or stop and await further signal from the dredge. The pipeline shall then be opened and the channel cleared as soon as practicable; when the channel is clear for passage the dredge shall so indicate by sounding the usual passing signal as prescribed in paragraph (c)(2)(ii) of this section. The approaching vessel shall answer with a corresponding signal and pass promptly.

(iv) When any pipeline or swinging dredge shall have given an approaching vessel or tow the signal that the channel is clear, the dredge shall straighten out within the cut for the passage of the vessel or tow.

(v) Shallow draft vessels when meeting or being overtaken by ocean-going vessels, shall give the right-of-way to such vessels by making use of the shallower portions of the waterway, wherever possible.

(vi) Tows should promptly give the channel side requested by proper signal from a vessel, and should be handled in such a manner as not to obstruct or interfere with the free use of the waterway by other craft.

(3) *Obstruction of traffic.* (i) Except as provided in paragraph (c)(2) of this section no person shall willfully or carelessly obstruct the free navigation of the waterway, or delay any vessel having the right to use the waterway.

(ii) No vessel shall anchor within the channel except in distress or under stress of weather. Any vessel so anchored shall be moved as quickly as

possible to such anchorage as will leave the channel clear for the passage of vessels.

(iii) Motorboats, sailboats, rowboats, and other small craft shall not anchor or drift in the regular ship channel except under stress of weather or in case of breakdown. Such craft shall be so operated that they will not interfere with or endanger the movement of commercial or public vessels.

(4) *Collisions.* (i) Ocean-going vessels in collision in the channel or turning basin, must if still afloat and in a condition making anchorage necessary, be immediately removed to an approved anchorage ground, or if in such condition that beaching is necessary, they shall be temporarily beached on the southwest side of Ryer Island from Mile 15.0 to Mile 16.3 or in the Harbor and Turning Basin at West Sacramento.

(ii) Light-draft vessels suffering collision shall be disposed of as directed by the District Commander or his authorized representative.

(5) *Marine accidents.* Masters, mates, pilots, owners, or other persons using the waterway to which this paragraph applies shall notify the District Commander and in the case of undocumented vessels, the State Division of Small Craft Harbors also, by the most expeditious means available of all marine accidents, such as fire, collision, sinking or stranding, where there is possible obstruction of the channel or interference with navigation or where damage to Government property is involved, furnishing a clear statement as to the name, address, and ownership of the vessel or vessels involved, the time and place, and the action taken. In all cases, the owner of the sunken vessel shall take immediate steps to mark the wreck properly.

(6) *Other laws and regulations.* In all other respects, existing Federal laws and rules and regulations affecting navigable waters of the United States will govern in this channel.

NOTE: The Corps of Engineers also has regulations dealing with this section in 33 CFR Part 207.

[CGD 75–082, 42 FR 51759, Sept. 29, 1977, as amended by CGD12 84–07, 51 FR 12318, Apr. 10, 1986; CGD11–94–007, 60 FR 16796, Apr. 3, 1995; USCG–1998–3799, 63 FR 35532, June 30, 1998; 78 FR 4788, Jan. 23, 2013]

§ 162.210 Lake Tahoe, Calif.; restricted areas along south shore.

(a) *The areas*—(1) *Baldwin Beach, under the control of the Forest Service, Department of Agriculture.* The waters of Lake Tahoe shoreward of a line described as follows: Beginning at the intersection of the high waterline with the west boundary line of Lot 2, Section 26, Township 13 North (Mount Diablo Base Line), Range 17 East (Mount Diablo Meridian); thence north 300 feet; thence southeasterly about 2,850 feet to the east line of Section 26 at a point 300 feet north of the high waterline; thence northeasterly 1,740 feet to a point 300 feet north of the high waterline; thence southeasterly about 1,810 feet to the projected east line of the former Baldwin property at a point 300 feet north of the high waterline; and thence south 300 feet to the high waterline.

(2) *Camp Richardson, under the control of the Forest Service, Department of Agriculture.* The waters of Lake Tahoe shoreward of a line described as follows: Beginning at the southeasterly corner of sec. 25, T. 13 N., R. 17 E., Mount Diablo Base and Meridian; thence north 410 feet along the east line of sec. 25; thence northwesterly 95 feet to the high waterline which is the true point of beginning; thence north 130 feet; thence southeasterly 565 feet; and thence south 130 feet to the high waterline.

(3) *Pope Beach, under the control of the Forest Service, Department of Agriculture.* The waters of Lake Tahoe shoreward of a line described as follows: Beginning at the intersection of the high waterline with the west line of the former Pope property, about 750 feet westerly of the west boundary line of Lot 2, Section 6, Township 12 North (Mount Diablo Base Line), Range 18 East (Mount Diablo Meridian); thence north 300 feet; thence southeasterly 4,200 feet to a point 300 feet north of the high waterline; and thence south 300 feet to the high waterline.

(4) *El Dorado County Beach*. The waters of Lake Tahoe shoreward of a line described as follows: Beginning at the intersection of the high waterline with the west boundary line of Lot 1, Section 32, Township 13 North (Mount Diablo Base Line), Range 18 East (Mount Diablo Meridian); thence north 500 feet; thence northeasterly about 1,350 feet to the projected east line of Lot 1 at a point 500 feet north of the high waterline; and thence south 500 feet to the high waterline.

(b) *The regulations*. No sail or machine-propelled watercraft, except vessels owned or controlled by the U.S. Coast Guard, shall navigate or anchor in the restricted area.

§ 162.215 Lake Tahoe, Nev.; restricted area adjacent to Nevada Beach.

(a) *The restricted area*. The waters of Lake Tahoe shoreward of a line described as follows: Beginning at the intersection of the high waterline with a line projected in a general southerly direction 200 feet from a point lying 310 feet west of section corner common to section 15, 16, 21, and 22, Township 13 North (Mount Diablo Base Line), Range 18 East (Mount Diablo Meridian); thence 300 feet lakeward at right angles to the high waterline; thence southeasterly approximately 2,170 feet to the projected south boundary line of the Forest Service property at a point 300 feet west of the high waterline; and thence east 300 feet to the high water line.

(b) *The regulations*. No sail or motor propelled watercraft, except vessels owned or controlled by the United States Government and vessels duly authorized by the United States Coast Guard, shall navigate or anchor in the restricted area.

§ 162.220 Hoover Dam, Lake Mead, and Lake Mohave (Colorado River), Ariz.-Nev.

(a) *Lake Mead and Lake Mohave; restricted areas*—(1) *The areas*. That portion of Lake Mead extending 700 feet upstream of the axis of Hoover Dam and that portion of Lake Mohave (Colorado River) extending 4,500 feet downstream of the axis of Hoover Dam.

(2) *The regulations*. The restricted areas shall be closed to navigation and other use by the general public. Only vessels owned by or controlled by the U.S. Government and the States of Arizona and Nevada shall navigate or anchor in the restricted areas: *Provided, however,* The Regional Director, Region 3, U.S. Bureau of Reclamation, Boulder City, Nev., may authorize, by written permit, individuals or groups to navigate or anchor in the restricted areas when it is deemed in the public interest. Copies of said permits must be furnished to the enforcing agencies.

(b) *Lake Mead; speed regulation*. In that portion of Lake Mead extending 300 feet upstream of the restricted area described in paragraph (a) of this section, a maximum speed of 5 miles per hour shall not be exceeded.

(c) *Supervision*. The regulations in this section shall be supervised by the District Commander, Eleventh Coast Guard District.

[CGD 75–082, 42 FR 51759, Sept. 29, 1977, as amended by USCG–2008–0179, 73 FR 35016, June 19, 2008]

§ 162.225 Columbia and Willamette Rivers, Washington and Oregon; administration and navigation.

(a) *Supervision*. The District Commander, Thirteenth Coast Guard District, has certain administrative supervision over the Columbia and Willamette Rivers, and is charged with the enforcement under his direction of emergency regulations to govern navigation of these streams.

(b) *Speed*. During very high water stages (usually 25 feet or more on the Vancouver, Washington, gage) when lives, floating plant or major shore installations are endangered, the District Commander shall have authority to prescribe such temporary speed regulations as he may deem necessary for the public safety. During critical periods of freshets under 25 feet on the Vancouver, Washington, gage when construction is in progress, rehabilitation, or other unusual emergency makes a major shore installation susceptible to loss or major damage from wave action, the District Commander shall have authority to prescribe for a particular limited reach of the river as appropriate such temporary speed regulations as he may deem necessary to protect the integrity of such structure. All

speed regulations prescribed by the District Commander shall be obeyed for the duration of the emergency and shall be terminated at the earliest practicable time that improved stream conditions permit.

§ 162.230 Columbia River, Wash.

(a) *Grand Coulee Dam discharge channel; restricted area*—(1) *The area.* That portion of the Columbia River between Grand Coulee Dam (situated at river mile 596.6) and river mile 593.7.

(2) *The regulations.* (i) No vessel shall enter or navigate within the area without permission from the enforcing agency.

(ii) The regulation in this section shall be enforced by the Chief, Power Field Division, Columbia Basin Project, U.S. Department of the Interior, Coulee Dam, Washington.

§ 162.235 Puget Sound Area, Wash.

(a) *Waterway connecting Port Townsend and Oak Bay; use, administration, and navigation*—(1) *Works to which regulations apply.* The ''canal grounds'' when used in this paragraph shall mean that area between the south end of the jetties in Oak Bay and the northerly end of the dredge channel approximately 400 yards northwest of Port Townsend Canal Light. The ''canal'' is the water lying between these limits and the banks containing the same.

(2) *Speed.* The speed limit within the canal grounds shall not exceed five miles per hour.

(3) *Signals.* All boats desiring to use the canal shall give one long and one short whistle. Southbound boats shall sound the signal within 600 yards of Port Townsend Canal Light. Northbound boats shall sound this signal at least 500 feet south from the end of the jetties in Oak bay. If no other boat answers the signal the first boat shall have the right of way through the canal. Any approaching boat that is in the canal shall answer by giving the same signal and the first boat shall not enter the canal until the second boat shall have passed through the canal. In the case of boats going in the same direction the boat which is in the canal shall not answer the signal of the boat desiring to enter.

(4) *Passing.* Steamers shall not under any circumstances attempt to pass each other in the canal, either when going in the same or opposite directions.

(5) *Anchoring.* No steamers or boats shall anchor or tie up within the canal grounds unless they are well over on the tide flats to the west of the dredged channel, and off the right of way belonging to the United States.

(6) *Tows.* No tow shall enter or pass through the canal with a towline more than 200 feet in length.

(7) *Delaying traffic.* No person shall cause or permit any vessel or boat of which he is in charge, or on which he is employed, to obstruct the canal in any way or delay in passing through it.

(b) *West Waterway, Seattle Harbor; navigation.* (1) The movement of vessels of 250 gross tons or over and all vessels with tows of any kind through the narrow section of West Waterway between the bend at Fisher's Flour Mill dock and the bend at the junction of East Waterway with Duwamish Waterway, and through the draws of the City of Seattle and Northern Pacific Railway Company bridges crossing this narrow section, shall be governed by red and green traffic signal lights mounted on the north and south sides of the west tower of the City Light power crossing at West Spokane Street.

(2) Two green lights, one vertically above the other, displayed ahead of a vessel, shall indicate that the waterway is clear. Two red lights, one vertically above the other, displayed ahead of a vessel, shall indicate that the waterway is not clear.

(3) A vessel approaching the narrow section and drawbridges from either end of the waterway shall give one long blast of a whistle and shall not enter the narrow section until green lights are displayed.

(4) One vessel may follow another vessel in either direction, but the channel shall not be kept open in the same direction for an unreasonable time if a vessel is waiting at the other end.

(5) Tugs, launches, and small craft shall keep close to one side of the channel when vessels or boats with tows are passing.

(6) All craft shall proceed with caution. The display of a green light is not

a guarantee that the channel is clear of traffic, and neither the United States nor the City of Seattle will be responsible for any damage to vessels or other property which may be chargeable to mistakes in the operation of the signal lights or to their failure to operate.

NOTE: The Corps of Engineers also has regulations dealing with this section in 33 CFR Part 207.

[CGD 75–082, 42 FR 51759, Sept. 29, 1977, as amended by USCG–2008–0179, 73 FR 35016, June 19, 2008]

§ 162.240 Tongass Narrows, Alaska; navigation.

(a) *Definitions*. The term ''Tongass Narrows'' includes the body of water lying between Revillagigedo Channel and Guard Island in Clarence Strait.

(b) No vessel, except for public law enforcement and emergency response vessels, floatplanes during landings and take-offs, and vessels of 23 feet registered length or less, shall exceed a speed of 7 knots in the region of Tongass Narrows bounded to the north by Tongass Narrows Buoy 9 and to the south by Tongass Narrows East Channel Regulatory marker at position 55°19′22.0″ N, 131°36′40.5″ W and Tongass Narrows West Channel Regulatory marker at position 55°19′28.5″ N, 131°39′09.7″ W, respectively.

(c) No vessel shall while moored or at anchor, or by slow passage or otherwise while underway, unreasonably obstruct the free passage and progress of other vessels.

(d) No vessel shall moor or anchor to any structure of the United States other than mooring piers, wharves, and floats without the consent of the Commander, Sector Juneau.

[CGD 75–082, 42 FR 51759, Sept. 29, 1977]

EDITORIAL NOTE: For FEDERAL REGISTER citations affecting § 162.240, see the List of CFR Sections Affected, which appears in the Finding Aids section of the printed volume and at www.fdsys.gov.

§ 162.245 Kenai River, Kenai, Alaska; use, administration, and navigation.

(a) *The area*. The main channel area of the river, having a width of 150 feet, beginning at a point directly offshore from the centerline of the city dock and extending about 2,200 feet upstream to a point 200 feet upstream from the Inlet Co. dock.

(b) *The regulations*. (1) Vessels may navigate, anchor, or moor within the area until such time as notification is received or observation is made of intended passage to or from the docking areas.

(2) Notice of anticipated passage of towboats and barges shall be indicated 24 hours in advance by display of a red flag by the Inlet Co. from its warehouse.

§ 162.250 Port Alexander, Alaska; speed of vessels.

(a) *Definition*. The term ''Port Alexander'' includes the entire inlet from its head to its entrance from Chatham Strait.

(b) *Speed*. The speed of all vessels of 5 tons or more gross, ships register, shall not exceed 3 miles per hour either in entering, leaving, or navigating within Port Alexander, Alaska.

[CGD 75–082, 42 FR 51759, Sept. 29, 1977, as amended by CGD 82–039, 47 FR 27266, June 24, 1982]

§ 162.255 Wrangell Narrows, Alaska; use, administration, and navigation.

(a) *Definitions*. (1) The term ''Wrangell Narrows'' includes the entire body of water between Wrangell Narrows North Entrance Lighted Bell Buoy 63 and Midway Rock Light.

(2) The term ''raft section'' refers to a standard raft of logs or piling securely fastened together for long towing in Alaska inland waters in the manner customary with the local logging interests, *i.e.*, with booms, swifters, and tail sticks. It normally contains 30,000 to 70,000 feet board measure of logs or piling and has a width of 45 to 60 feet and a length of 75 to 100 feet.

(b) *Speed restrictions*. No vessel shall exceed a speed of seven (7) knots in the vicinity of Petersburg, between Wrangell Narrows Channel Light 58 and Wrangell Narrows Lighted Buoy 60.

(c) *Tow channel*. The following route shall be taken by all tows passing through Wrangell Narrows when the towboat has a draft of 9 feet or less (northbound, read down; southbound, read up):

East of Battery Islets:

East of Tow Channel Buoy 1 TC.
East of Tow Channel Buoy 3 TC.
West of Tow Channel Buoy 4 TC.
East of Colorado Reef:
East of Wrangell Narrows Channel Light 21.
West of Wrangell Narrows Channel Lighted Buoy 25.
East of Tow Channel Buoy 5 TC.
East of Tow Channel Buoy 7 TC.
West of Petersburg:
East of Wrangell Narrows Channel Light 54 Fr.
East of Wrangell Narrows Channel Light 56 Qk FR.
East of Wrangell Narrows Channel Light 58 Fr., thence proceeding to west side of channel and leaving Wrangell Narrows by making passage between Wrangell Narrows Channel Daybeacon 61 and Wrangell Narrows North Entrance Lighted Bell Buoy 63 F.

(d) *Size of tows.* The maximum tows permitted shall be one pile driver, or three units of other towable equipment or seven raft sections.

(e) *Arrangement of tows.* (1) No towline or aggregate of towlines between towboat and separated pieces shall exceed 150 feet in length.

(2) Raft and barge tows of more than one unit shall not exceed 65 feet in width overall. Single barge tows shall not exceed 100 feet in width overall.

(3) Tows other than rafts shall be taken alongside the towboat whenever possible.

(f) *Anchorage.* Vessels may anchor in the anchorage basin in the vicinity of Anchor Point. No craft or tow shall be anchored in Wrangell Narrows in either the main ship channel or the towing channel, nor shall any craft or tow be anchored so that it can swing into either of these channels.

(g) *Disabled craft.* Disabled craft in a condition of absolute necessity are exempt from the regulations in this section.

[CGD 75–082, 42 FR 51759, Sept. 29, 1977, as amended by CGD 82–039, 47 FR 27266, June 24, 1982; CGD 94–026, 60 FR 63624, Dec. 12, 1995]

§ 162.260 Channel leading to San Juan Harbor, P.R.; use, administration, and navigation.

(a) Steamers passing dredge engaged in improving the channel shall not have a speed greater than 4 miles an hour, and the propelling machinery shall be stopped when crossing the lines to the dredge anchors.

(b) Vessels using the channel shall pass the dredge on the side designated from the dredge by the signals prescribed in paragraph (c) of this section.

(c) Dredge shall display the red flag by day and four white lights hung in a vertical line by night to indicate the passing side.

(d) Vessels shall not anchor on the ranges of stakes or other marks placed for the guidance of the dredge, nor in such a manner as to obstruct the channel for passing vessels.

(e) Vessels shall not run over or disturb stake, lanterns, or other marks placed for the guidance of the dredge.

(f) Dredges working in the prosecution of the work shall not obstruct the channel unnecessarily.

(g) The dredge will slack lines running across the channel from the dredge on the passing side, for passing vessels, when notified by signal, with whistle or horn.

(h) The position of anchors of the dredge shall be marked by buoys plainly visible to passing vessels.

§ 162.270 Restricted areas in vicinity of Maritime Administration Reserve Fleets.

(a) The regulations in this section shall govern the use and navigation of waters in the vicinity of the following National Defense Reserve Fleets of the Maritime Administration, Department of Transportation:

(1) James River Reserve Fleet, Fort Eustis, Virginia.

(2) Beaumont Reserve Fleet, Neches River near Beaumont, Texas.

(3) Suisun Bay Reserve Fleet near Benicia, California.

(b) No vessels or other watercraft, except those owned or controlled by the United States Government, shall cruise or anchor between Reserve Fleet units within 500 feet of the end vessels in each Reserve Fleet unit, or within 500 feet of the extreme units of the fleets, unless specific permission to do so has first been granted in each case by the enforcing agency.

(c) The regulations in this section shall be enforced by the respective

Fleet Superintendents and such agencies as they may designate.

[CGD 75–082, 42 FR 51759, Sept. 29, 1977, as amended by CGD 86–053, 51 FR 43742, Dec. 4, 1986; USCG–2011–0257, 76 FR 31838, June 2, 2011]

PART 163—TOWING OF BARGES

Sec.
163.01 Application.
163.03 Definitions.
163.05 Tows of seagoing barges within inland waters.
163.20 Bunching of tows.

AUTHORITY: 33 U.S.C. 152, 2071; 49 CFR 1.46(n).

§ 163.01 Application.

(a) The regulations in this part apply to vessels navigating the harbors, rivers, and inland waters of the United States, except the Great Lakes and their connecting and tributary waters as far east as Montreal, the Red River of the North, the Mississippi River and its tributaries above Huey P. Long Bridge, and that part of the Atchafalaya River above its junction with the Plaquemine-Morgan City alternate waterway.

(b) Seagoing barges and their towing vessels shall be subject to the requirements in this part under the provisions of section 14 of the Act of May 28, 1908, as amended (sec. 14, 35 Stat. 428, as amended; 33 U.S.C. 152). Under the provisions of section 15 of the Act of May 28, 1908, as amended (sec. 15, 35 Stat. 429; 33 U.S.C. 153), the penalty for use of an unlawful towline shall be an action against the master of the towing vessel seeking the suspension or revocation of his license or merchant mariner credential.

[CGFR 60–61, 25 FR 9045, Sept. 21, 1960, as amended by CGFR 66–59, 31 FR 13647, Oct. 22, 1966. Redesignated by CGD 81–017, 46 FR 28154, May 26, 1981; USCG–2006–24371, 74 FR 11213, Mar. 16, 2009]

§ 163.03 Definitions.

The following definition applies to this part:

Merchant mariner credential or MMC means the credential issued by the Coast Guard under 46 CFR part 10. It combines the individual merchant mariner's document, license, and certificate of registry enumerated in 46 U.S.C. subtitle II part E as well as the STCW endorsement into a single credential that serves as the mariner's qualification document, certificate of identification, and certificate of service.

[USCG–2006–24371, 74 FR 11213, Mar. 16, 2009]

§ 163.05 Tows of seagoing barges within inland waters.

(a) The tows of seagoing barges when navigating the inland waters of the United States shall be limited in length to five vessels, including the towing vessel or vessels.

[CGFR 60–61, 25 FR 9045, Sept. 21, 1960. Redesignated by CGD 81–017, 46 FR 28154, May 26, 1981]

§ 163.20 Bunching of tows.

(a) In all cases where tows can be bunched, it should be done.

(b) Tows navigating in the North and East Rivers of New York must be bunched above a line drawn between Robbins Reef Light and Owls Head, Brooklyn, but the quarantine anchorage and the north entrance to Ambrose Channel shall be avoided in the process of bunching tows.

(c) Tows must be bunched above the mouth of the Schuylkill River, Pa.

[CGFR 60–61, 25 FR 9045, Sept. 21, 1960, as amended by CGFR 64–21, 29 FR 5733, Apr. 30, 1964. Redesignated by CGD 81–017, 46 FR 28154, May 26, 1981]

PART 164—NAVIGATION SAFETY REGULATIONS

Sec.
164.01 Applicability.
164.02 Applicability exception for foreign vessels.
164.03 Incorporation by reference.
164.11 Navigation under way: General.
164.13 Navigation underway: tankers.
164.15 Navigation bridge visibility.
164.19 Requirements for vessels at anchor.
164.25 Tests before entering or getting underway.
164.30 Charts, publications, and equipment: General.
164.33 Charts and publications.
164.35 Equipment: All vessels.
164.37 Equipment: Vessels of 10,000 gross tons or more.
164.38 Automatic radar plotting aids (ARPA).

164.39 Steering gear: Foreign tankers.
164.40 Devices to indicate speed and distance.
164.41 Electronic position fixing devices.
164.42 Rate of turn indicator.
164.43 Automatic Identification System Shipborne Equipment—Prince William Sound.
164.46 Automatic Identification System (AIS).
164.51 Deviations from rules: Emergency.
164.53 Deviations from rules and reporting: Non-operating equipment.
164.55 Deviations from rules: Continuing operation or period of time.
164.61 Marine casualty reporting and record retention.
164.70 Definitions.
164.72 Navigational-safety equipment, charts or maps, and publications required on towing vessels.
164.74 Towline and terminal gear for towing astern.
164.76 Towline and terminal gear for towing alongside and pushing ahead.
164.78 Navigation under way: Towing vessels.
164.80 Tests, inspections, and voyage planning.
164.82 Maintenance, failure, and reporting.

AUTHORITY: 33 U.S.C. 1222(5), 1223, 1231; 46 U.S.C. 2103, 3703; Department of Homeland Security Delegation No. 0170.1 (75). Sec. 164.13 also issued under 46 U.S.C. 8502. Sec. 164.61 also issued under 46 U.S.C. 6101.

§ 164.01 Applicability.

(a) This part (except as specifically limited by this section) applies to each self-propelled vessel of 1600 or more gross tons (except as provided in paragraphs (c) and (d) of this section, or for foreign vessels described in § 164.02) when it is operating in the navigable waters of the United States except the St. Lawrence Seaway.

(b) Sections 164.70 through 164.82 of this part apply to each towing vessel of 12 meters (39.4 feet) or more in length operating in the navigable waters of the United States other than the St. Lawrence Seaway; except that a towing vessel is exempt from the requirements of § 164.72 if it is—

(1) Used solely within a limited geographic area, such as a fleeting-area for barges or a commercial facility, and used solely for restricted service, such as making up or breaking up larger tows;

(2) Used solely for assistance towing as defined by 46 CFR 10.103;

(3) Used solely for pollution response; or

(4) Any other vessel exempted by the Captain of the Port (COTP). The COTP, upon written request, may, in writing, exempt a vessel from § 164.72 for a specified route if he or she decides that exempting it would not allow its unsafe navigation under anticipated conditions.

(c) Provisions of §§ 164.11(a)(2) and (c), 164.30, 164.33, and 164.46 do not apply to warships or other vessels owned, leased, or operated by the United States Government and used only in government noncommercial service when these vessels are equipped with electronic navigation systems that have met the applicable agency regulations regarding navigation safety.

(d) Provisions of § 164.46 apply to some self-propelled vessels of less than 1600 gross tonnage.

[CGD 83–004, 49 FR 43466, Oct. 29, 1984, as amended by CGD 94–020, 61 FR 35072, July 3, 1996; USCG–2000–8300, 66 FR 21864, May 2, 2001; USCG–2003–14757, 68 FR 39367, July 1, 2003]

§ 164.02 Applicability exception for foreign vessels.

(a) Except as provided in § 164.46(a)(2) of this part, including §§ 164.38 and 164.39, this part does not apply to vessels that:

(1) Are not destined for, or departing from, a port or place subject to the jurisdiction of the United States; and

(2) Are in:

(i) Innocent passage through the territorial sea of the United States; or

(ii) Transit through navigable waters of the United States which form a part of an international strait.

[CGD 77–063, 44 FR 66530, Nov. 19, 1979, as amended by CGD 79–148, 45 FR 54039, Aug. 14, 1980; USCG–2003–14757, 68 FR 39367, July 1, 2003; 68 FR 60569, Oct. 22, 2003]

§ 164.03 Incorporation by reference.

(a) Certain material is incorporated by reference into this part with the approval of the Director of the Federal Register under 5 U.S.C. 552(a) and 1 CFR part 51. To enforce any edition other than that specified in paragraph (b) of this section, the Coast Guard must publish notice of change in the FEDERAL REGISTER and the material

must be available to the public. All approved material is available for inspection at the Navigation Systems Division (CG–553), Coast Guard Headquarters, 2100 2nd St. SW., Stop 7580, Washington, DC 20593–7580 and at the National Archives and Records Administration (NARA). For information on the availability of this material at NARA, call 202–741–6030, or go to: *http://www.archives.gov/federal_register/code_of_federal_regulations/ibr_locations.html*. All approved material is available from the sources indicated in paragraph (b) of this section.

(b) The materials approved for incorporation by reference in this part and the sections affected are as follows:

American Petroleum Institute (API), 1220 L Street NW., Washington, DC 20005

API Specification 9A, Specification for Wire Rope, Section 3, Properties and Tests for Wire and Wire Rope, May 28, 1984 ..... 164.74

American Society for Testing and Materials (ASTM), 100 Barr Harbor Drive, West Conshohocken, PA 19428-2959

ASTM D4268–93, Standard Test Method for Testing Fiber Ropes 164.74

Cordage Institute, 350 Lincoln Street, Hingham, MA 02043

CIA–3, Standard Test Methods for Fiber Rope Including Standard Terminations, Revised, June 1980 ..... 164.74

International Electrotechnical Commission (IEC), 3, rue de Varemb, Geneva, Switzerland.

IEC 61993–2, Maritime navigation and radiocommunication equipment and systems—Automatic identification systems (AIS)—part 2: Class A shipborne equipment of the universal automatic identification system (AIS)—Operational and performance requirements, methods of test and required test results First edition, 2001–12 ..... 164.46

International Maritime Organization (IMO), 4 Albert Embankment, London SE1 7SR, U.K.

IMO Resolution A342(IX), Recommendation on Performance Standards for Automatic Pilots, adopted November 12, 1975 ..... 164.13

Resolution MSC.74(69), Annex 3, Recommendation on Performance Standards for a Universal Shipborne Automatic Identification System (AIS), adopted May 12, 1998 ... 164.46

SN/Circ.227, Guidelines for the Installation of a Shipborne Automatic Identification System (AIS), dated January 6, 2003 ..... 164.46

SOLAS, International Convention for Safety of Life at Sea, 1974, and 1988 Protocol relating thereto, 2000 Amendments, effective January and July 2002, (SOLAS 2000 Amendments) 164.46

Conference resolution 1, Adoption of amendments to the Annex to the International Convention for the Safety of Life at Sea, 1974, and amendments to Chapter V of SOLAS 1974, adopted December 12, 2002 ..... 164.46

International Telecommunication Union Radiocommuni- cation Bureau (ITU-R), Place de Nations CH–1211 Geneva 20 Switzerland

(1) ITU-R Recommendation M.821, Optional Expansion of the Digital Selective-Calling System for Use in the Maritime Mobile Service, 1992 ..... 164.43

(2) ITU-R Recommendation M.825, Characteristics of a Transponder System Using Digital Selective-Calling Techniques for Use with Vessel Traffic Services and Ship-to-Ship Identification, 1992 ... 164.43

ITU-R Recommendation M.1371–1, Technical characteristics for a universal shipborne automatic identification system using time division multiple access in the VHF maritime mobile band, 1998–2001 ..... 164.46

Radio Technical Commission for Maritime Services,(RTCM), 1611 North Kent Street, Suite 605, Arlington, VA 22209

(1) RTCM Paper 12–78/DO–100, Minimum Performance Standards, Loran C Receiving Equipment, 1977 ..... 164.41

(2) RTCM Paper 194–93/SC104–STD, RTCM Recommended Standards for Differential NAVSTAR GPS Service, Version 2.1, 1994 ..... 164.43

(3) RTCM Paper 71–95/SC112–STD, RTCM Recommended Standards for Marine Radar Equipment Installed on Ships of Less Than 300 Tons Gross Tonnage, Version 1.1, October 10, 1995	164.72
(4) RTCM Paper 191–93/SC112–X, RTCM Recommended Standards for Maritime Radar Equipment Installed on Ships of 300 Tons Gross Tonnage and Upwards, Version 1.2, December 20, 1993	164.72

[CGD 91–203, 58 FR 27632, May 10, 1993]

EDITORIAL NOTE: For FEDERAL REGISTER citations affecting § 164.03, see the List of CFR Sections Affected, which appears in the Finding Aids section of the printed volume and at *www.fdsys.gov*.

§ 164.11 Navigation under way: General.

The owner, master, or person in charge of each vessel underway shall ensure that:

(a) The wheelhouse is constantly manned by persons who:

(1) Direct and control the movement of the vessel; and

(2) Fix the vessel's position;

(b) Each person performing a duty described in paragraph (a) of this section is competent to perform that duty;

(c) The position of the vessel at each fix is plotted on a chart of the area and the person directing the movement of the vessel is informed of the vessel's position;

(d) Electronic and other navigational equipment, external fixed aids to navigation, geographic reference points, and hydrographic contours are used when fixing the vessel's position;

(e) Buoys alone are not used to fix the vessel's position;

NOTE: Buoys are aids to navigation placed in approximate positions to alert the mariner to hazards to navigation or to indicate the orientation of a channel. Buoys may not maintain an exact position because strong or varying currents, heavy seas, ice, and collisions with vessels can move or sink them or set them adrift. Although buoys may corroborate a position fixed by other means, buoys cannot be used to fix a position: however, if no other aids are available, buoys alone may be used to establish an estimated position.

(f) The danger of each closing visual or each closing radar contact is evaluated and the person directing the movement of the vessel knows the evaluation;

(g) Rudder orders are executed as given;

(h) Engine speed and direction orders are executed as given;

(i) Magnetic variation and deviation and gyrocompass errors are known and correctly applied by the person directing the movement of the vessel;

(j) A person whom he has determined is competent to steer the vessel is in the wheelhouse at all times;[1]

(k) If a pilot other than a member of the vessel's crew is employed, the pilot is informed of the draft, maneuvering characteristics, and peculiarities of the vessel and of any abnormal circumstances on the vessel that may affect its safe navigation.

(l) Current velocity and direction for the area to be transited are known by the person directing the movement of the vessel;

(m) Predicted set and drift are known by the person directing movement of the vessel;

(n) Tidal state for the area to be transited is known by the person directing movement of the vessel;

(o) The vessel's anchors are ready for letting go;

(p) The person directing the movement of the vessel sets the vessel's speed with consideration for:

(1) The prevailing visibility and weather conditions;

(2) The proximity of the vessel to fixed shore and marine structures;

(3) The tendency of the vessel underway to squat and suffer impairment of maneuverability when there is small underkeel clearance;

(4) The comparative proportions of the vessel and the channel;

(5) The density of marine traffic;

(6) The damage that might be caused by the vessel's wake;

(7) The strength and direction of the current; and

(8) Any local vessel speed limit;

(q) The tests required by § 164.25 are made and recorded in the vessel's log; and

[1] See also 46 U.S.C. 8702(d), which requires an able seaman at the wheel on U.S. vessels of 100 gross tons or more in narrow or crowded waters during low visibility.

(r) The equipment required by this part is maintained in operable condition.

(s) Upon entering U.S. waters, the steering wheel or lever on the navigating bridge is operated to determine if the steering equipment is operating properly under manual control, unless the vessel has been steered under manual control from the navigating bridge within the preceding 2 hours, except when operating on the Great Lakes and their connecting and tributary waters.

(t) At least two of the steering-gear power units on the vessel are in operation when such units are capable of simultaneous operation, except when the vessel is sailing on the Great Lakes and their connecting and tributary waters, and except as required by paragraph (u) of this section.

(u) On each passenger vessel meeting the requirements of the International Convention for the Safety of Life at Sea, 1960 (SOLAS 60) and on each cargo vessel meeting the requirements of SOLAS 74 as amended in 1981, the number of steering-gear power units necessary to move the rudder from 35° on either side to 30° on the other in not more than 28 seconds must be in simultaneous operation.

[CGD 74–77, 42 FR 5956, Jan. 31, 1977, as amended by CGD 83–004, 49 FR 43466, Oct. 29, 1984; CGD 91–203, 58 FR 27633, May 10, 1993; CGD 83–043, 60 FR 24771, May 10, 1995]

§ 164.13 Navigation underway: tankers.

(a) As used in this section, ''tanker'' means a self-propelled tank vessel, including integrated tug barge combinations, constructed or adapted primarily to carry oil or hazardous material in bulk in the cargo spaces and inspected and certificated as a tanker.

(b) Each tanker must have an engineering watch capable of monitoring the propulsion system, communicating with the bridge, and implementing manual control measures immediately when necessary. The watch must be physically present in the machinery spaces or in the main control space and must consist of at least an engineer with an appropriately endorsed license or merchant mariner credential.

(c) Each tanker must navigate with at least two deck officers with an appropriately endorsed license or merchant mariner credential on watch on the bridge, one of whom may be a pilot. In waters where a pilot is required, the second officer, must be an individual holding an appropriately endorsed license or merchant mariner credential and assigned to the vessel as master, mate, or officer in charge of a navigational watch, who is separate and distinct from the pilot.

(d) Except as specified in paragraph (e) of this section, a tanker may operate with an auto pilot engaged only if all of the following conditions exist:

(1) The operation and performance of the automatic pilot conforms with the standards recommended by the International Maritime Organization in IMO Resolution A.342(IX).

(2) A qualified helmsman is present at the helm and prepared at all times to assume manual control.

(3) The tanker is not operating in any of the following areas:

(i) The areas of the traffic separation schemes specified in subchapter P of this chapter.

(ii) The portions of a shipping safety fairway specified in part 166 of this chapter.

(iii) An anchorage ground specified in part 110 of this chapter.

(iv) An area within one-half nautical mile of any U.S. shore.

(e) A tanker equipped with an integrated navigation system, and complying with paragraph (d)(2) of this section, may use the system with the auto pilot engaged while in the areas described in paragraphs (d)(3) (i) and (ii) of this section. The master shall provide, upon request, documentation showing that the integrated navigation system—

(1) Can maintain a predetermined trackline with a cross track error of less than 10 meters 95 percent of the time;

(2) Provides continuous position data accurate to within 20 meters 95 percent of the time; and

(3) Has an immediate override control.

[CGD 91–203, 58 FR 27633, May 10, 1993, as amended by CGD 91–203, 58 FR 36141, July 6, 1993; USCG–2006–24371, 74 FR 11213, Mar. 16, 2009]

EFFECTIVE DATE NOTE: At 58 FR 36141, July 6, 1993, § 164.13 was amended by suspending paragraph (e), effective July 9, 1993.

§ 164.15 Navigation bridge visibility.

(a) The arrangement of cargo, cargo gear, and trim of all vessels entering or departing from U.S. ports must be such that the field of vision from the navigation bridge conforms as closely as possible to the following requirements:

(1) From the conning position, the view of the sea surface must not be obscured by more than the lesser of two ship lengths or 500 meters (1640 feet) from dead ahead to 10 degrees on either side of the vessel. Within this arc of visibility any blind sector caused by cargo, cargo gear, or other permanent obstruction must not exceed 5 degrees.

(2) From the conning position, the horizontal field of vision must extend over an arc from at least 22.5 degrees abaft the beam on one side of the vessel, through dead ahead, to at least 22.5 degrees abaft the beam on the other side of the vessel. Blind sectors forward of the beam caused by cargo, cargo gear, or other permanent obstruction must not exceed 10 degrees each, nor total more than 20 degrees, including any blind sector within the arc of visibility described in paragraph (a)(1) of this section.

(3) From each bridge wing, the field of vision must extend over an arc from at least 45 degrees on the opposite bow, through dead ahead, to at least dead astern.

(4) From the main steering position, the field of vision must extend over an arc from dead ahead to at least 60 degrees on either side of the vessel.

(b) A clear view must be provided through at least two front windows at all times regardless of weather conditions.

[CGD 85–099, 55 FR 32247, Aug. 8, 1990, as amended by USCG–2006–25150, 71 FR 39211, July 12, 2006]

§ 164.19 Requirements for vessels at anchor.

The master or person in charge of each vessel that is anchored shall ensure that:

(a) A proper anchor watch is maintained;

(b) Procedures are followed to detect a dragging anchor; and

(c) Whenever weather, tide, or current conditions are likely to cause the vessel's anchor to drag, action is taken to ensure the safety of the vessel, structures, and other vessels, such as being ready to veer chain, let go a second anchor, or get underway using the vessel's own propulsion or tug assistance.

[CGD 74–77, 42 FR 5956, Jan. 31, 1977]

§ 164.25 Tests before entering or getting underway.

(a) Except as provided in paragraphs (b) and (c) of this section no person may cause a vessel to enter into or get underway on the navigable waters of the United States unless no more than 12 hours before entering or getting underway, the following equipment has been tested:

(1) Primary and secondary steering gear. The test procedure includes a visual inspection of the steering gear and its connecting linkage, and, where applicable, the operation of the following:

(i) Each remote steering gear control system.

(ii) Each steering position located on the navigating bridge.

(iii) The main steering gear from the alternative power supply, if installed.

(iv) Each rudder angle indicator in relation to the actual position of the rudder.

(v) Each remote steering gear control system power failure alarm.

(vi) Each remote steering gear power unit failure alarm.

(vii) The full movement of the rudder to the required capabilities of the steering gear.

(2) All internal vessel control communications and vessel control alarms.

(3) Standby or emergency generator, for as long as necessary to show proper functioning, including steady state temperature and pressure readings.

(4) Storage batteries for emergency lighting and power systems in vessel control and propulsion machinery spaces.

(5) Main propulsion machinery, ahead and astern.

(b) Vessels navigating on the Great Lakes and their connecting and tributary waters, having once completed the

test requirements of this subpart, are considered to remain in compliance until arriving at the next port of call on the Great Lakes.

(c) Vessels entering the Great Lakes from the St. Lawrence Seaway are considered to be in compliance with this sub-part if the required tests are conducted preparatory to or during the passage of the St. Lawrence Seaway or within one hour of passing Wolfe Island.

(d) No vessel may enter, or be operated on the navigable waters of the United States unless the emergency steering drill described below has been conducted within 48 hours prior to entry and logged in the vessel logbook, unless the drill is conducted and logged on a regular basis at least once every three months. This drill must include at a minimum the following:

(1) Operation of the main steering gear from within the steering gear compartment.

(2) Operation of the means of communications between the navigating bridge and the steering compartment.

(3) Operation of the alternative power supply for the steering gear if the vessel is so equipped.

(92 Stat. 1471 (33 U.S.C. 1221 *et seq.*); 49 CFR 1.46(n)(4))

[CGD 77–183, 45 FR 18925, Mar. 24, 1980, as amended by CGD 83–004, 49 FR 43466, Oct. 29, 1984]

§ 164.30 Charts, publications, and equipment: General.

No person may operate or cause the operation of a vessel unless the vessel has the marine charts, publications, and equipment as required by §§ 164.33 through 164.41 of this part.

[CGD 82–055, 48 FR 44535, Sept. 29, 1983]

§ 164.33 Charts and publications.

(a) Each vessel must have the following:

(1) Marine charts of the area to be transited, published by the National Ocean Service, U.S. Army Corps of Engineers, or a river authority that—

(i) Are of a large enough scale and have enough detail to make safe navigation of the area possible; and

(ii) Are currently corrected.

(2) For the area to be transited, a currently corrected copy of, or applicable currently corrected extract from, each of the following publications:

(i) U.S. Coast Pilot.

(ii) Coast Guard Light List.

(3) For the area to be transited, the current edition of, or applicable current extract from:

(i) Tide tables published by private entities using data provided by the National Ocean Service.

(ii) Tidal current tables published by private entities using data provided by the National Ocean Service, or river current publication issued by the U.S. Army Corps of Engineers, or a river authority.

(b) As an alternative to the requirements for paragraph (a) of this section, a marine chart or publication, or applicable extract, published by a foreign government may be substituted for a U.S. chart and publication required by this section. The chart must be of large enough scale and have enough detail to make safe navigation of the area possible, and must be currently corrected. The publication, or applicable extract, must singly or in combination contain similar information to the U.S. Government publication to make safe navigation of the area possible. The publication, or applicable extract must be currently corrected, with the exceptions of tide and tidal current tables, which must be the current editions.

(c) As used in this section, ''currently corrected'' means corrected with changes contained in all Notices to Mariners published by the National Imagery and Mapping Agency, or an equivalent foreign government publication, reasonably available to the vessel, and that is applicable to the vessel's transit.

[CGD 82–055, 48 FR 44535, Sept. 29, 1983, as amended by USCG–2001–9286, 66 FR 33641, June 25, 2001]

§ 164.35 Equipment: All vessels.

Each vessel must have the following:

(a) A marine radar system for surface navigation.

(b) An illuminated magnetic steering compass, mounted in a binnacle, that can be read at the vessel's main steering stand.

(c) A current magnetic compass deviation table or graph or compass comparison record for the steering compass, in the wheelhouse.

(d) A gyrocompass.

(e) An illuminated repeater for the gyrocompass required by paragraph (d) of this section that is at the main steering stand, unless that gyrocompass is illuminated and is at the main steering stand.

(f) An illuminated rudder angle indicator in the wheelhouse.

(g) The following maneuvering information prominently displayed on a fact sheet in the wheelhouse:

(1) A turning circle diagram to port and starboard that shows the time and distance and advance and transfer required to alter course 90 degrees with maximum rudder angle and constant power settings, for either full and half speeds, or for full and slow speeds. For vessels whose turning circles are essentially the same for both directions, a diagram showing a turning circle in one direction, with a note on the diagram stating that turns to port and starboard are essentially the same, may be substituted.

(2) The time and distance to stop the vessel from either full and half speeds, or from full and slow speeds, while maintaining approximately the initial heading with minimum application of the rudder.

(3) For each vessel with a fixed propeller, a table of shaft revolutions per minute for a representative range of speeds.

(4) For each vessel with a controllable pitch propeller, a table of control settings for a representative range of speeds.

(5) For each vessel that is fitted with an auxiliary device to assist in maneuvering, such as a bow thruster, a table of vessel speeds at which the auxiliary device is effective in maneuvering the vessel.

(6) The maneuvering information for the normal load and normal ballast condition for:

(i) Calm weather—wind 10 knots or less, calm sea;

(ii) No current;

(iii) Deep water conditions—water depth twice the vessel's draft or greater; and

(iv) Clean hull.

(7) At the bottom of the fact sheet, the following statement:

WARNING

The response of the (name of the vessel) may be different from that listed above if any of the following conditions, upon which the maneuvering information is based, are varied:

(1) Calm weather—wind 10 knots or less, calm sea;

(2) No current;

(3) Water depth twice the vessel's draft or greater;

(4) Clean hull; and

(5) Intermediate drafts or unusual trim.

(h) An echo depth sounding device.

(i) A device that can continuously record the depth readings of the vessel's echo depth sounding device, except when operating on the Great Lakes and their connecting and tributary waters.

(j) Equipment on the bridge for plotting relative motion.

(k) Simple operating instructions with a block diagram, showing the change-over procedures for remote steering gear control systems and steering gear power units, permanently displayed on the navigating bridge and in the steering gear compartment.

(l) An indicator readable from the centerline conning position showing the rate of revolution of each propeller, except when operating on the Great Lakes and their connecting and tributary waters.

(m) If fitted with controllable pitch propellers, an indicator readable from the centerline conning position showing the pitch and operational mode of such propellers, except when operating on the Great Lakes and their connecting and tributary waters.

(n) If fitted with lateral thrust propellers, an indicator readable from the centerline conning position showing the direction and amount of thrust of such propellers, except when operating on the Great Lakes and their connecting and tributary waters.

(o) A telephone or other means of communication for relaying headings to the emergency steering station. Also, each vessel of 500 gross tons and over and constructed on or after June 9, 1995 must be provided with arrangements for supplying visual compass-

readings to the emergency steering station.

(92 Stat. 1471 (33 U.S.C. 1221 *et seq.*); 49 CFR 1.46(n)(4))

[CGD 74–77, 42 FR 5956, Jan. 31, 1977, as amended by CGD 77–183, 45 FR 18925, Mar. 24, 1980; CGD 83–004, 49 FR 43466, Oct. 29, 1984; CGD 83–043, 60 FR 24771, May 10, 1995; 60 FR 28834, June 2, 1995]

§ 164.37 Equipment: Vessels of 10,000 gross tons or more.

(a) Each vessel of 10,000 gross tons or more must have, in addition to the radar system under § 164.35(a), a second marine radar system that operates independently of the first.

NOTE: Independent operation means two completely separate systems, from separate branch power supply circuits or distribution panels to antennas, so that failure of any component of one system will not render the other system inoperative.

(b) On each tanker of 10,000 gross tons or more that is subject to 46 U.S.C. 3708, the dual radar system required by this part must have a short range capability and a long range capability; and each radar must have true north features consisting of a display that is stabilized in azimuth.

(Titles I and II, 86 Stat. 426, 427 (33 U.S.C. 1224; 46 U.S.C. 391(a); 49 CFR 1.46(n)(4))

[CGD 77–016, 43 FR 32112, July 24, 1978, as amended by CGD 79–033, 44 FR 26741, May 7, 1979; CGD 79–033, 47 FR 34389, Aug. 9, 1982; USCG–1998–3799, 63 FR 35532, June 30, 1998]

§ 164.38 Automatic radar plotting aids (ARPA).

(a) The following definitions are used in this section—

Bulk means material in any quantity that is shipped, stored, or handled without benefit of package, label, mark or count and carried in integral or fixed independent tanks.

Constructed means a stage of construction where—

(1) The keel is laid;

(2) Construction identifiable with a specific ship begins; or

(3) Assembly of that ship has commenced comprising at least 50 tons or 1 percent of the estimated mass of all structural material, whichever is less.

Hazardous material means—

(1) A flammable liquid as defined in 46 CFR 30.10–22 or a combustible liquid as defined in 46 CFR 30.10–15;

(2) A material listed in table 151.05 of 46 CFR 151.05, table 1 of 46 CFR 153, or table 4 of 46 CFR Part 154; or

(3) A liquid, liquefied gas, or compressed gas listed in 49 CFR 172.101.

Self-propelled vessel includes those combinations of pushing vessel and vessel being pushed ahead which are rigidly connected in a composite unit and are required by Rule 24(b) of the International Regulations for Preventing Collisions at Sea, 1972 (72 COLREGS) (App. A to 33 CFR Part 81) to exhibit the lights prescribed in Rule 23 for a ''Power Driven Vessel Underway''.

Tank vessel means a vessel that is constructed or adapted to carry; or carries, oil or hazardous materials in bulk as cargo or cargo residue.

(b) An Automatic Radar Plotting Aid (ARPA) that complies with the standard for such devices adopted by the International Maritime Organization in its ''Operational Standards for Automatic Radar Plotting Aids'' (Appendix A), and that has both audible and visual alarms, must be installed as follows:

(1) Each self-propelled vessel, except a public vessel, of 10,000 gross tons or more carrying oil or hazardous materials in bulk as cargo or in residue on the navigable waters of the United States, or which transfers oil or hazardous materials in any port or place subject to the jurisdiction of the United States, must be equipped with an ARPA.

(2) Each tank vessel of 10,000 gross tons or more operating on the navigable waters of the United States must be equipped with an ARPA.

(3) Each self-propelled vessel of 15,000 gross tons or more that is not a tank vessel, and is not carrying oil or hazardous material in bulk as cargo or in residue operating on the navigable waters of the United States, and was constructed before September 1, 1984, must be equipped with an ARPA, except when it is operating on the Great Lakes and their connecting and tributary waters.

(4) Each vessel of 10,000 gross tons or more, except when operating on the

Great Lakes and their connecting and tributary waters, constructed on or after September 1, 1984 must be equipped with an ARPA.

(c) [Reserved]

(d)(1) Each device required under paragraph (b) of this section must have a permanently affixed label containing:

(i) The name and address of the manufacturer; and

(ii) The following statement:

''This device was designed and manufactured to comply with the International Maritime Organization (IMO) 'Performance Standards for Automatic Radar Plotting Aids (ARPA).' ''

(2) [Reserved]

APPENDIX A TO § 164.38—PERFORMANCE STANDARDS FOR AUTOMATIC RADAR PLOTTING AIDS (ARPA)

1 Introduction

1.1 The Automatic Radar Plotting Aids (ARPA) should, in order to improve the standard of collision avoidance at sea:

.1 Reduce the work-load of observers by enabling them to automatically obtain information so that they can perform as well with multiple targets as they can by manually plotting a single target; and

.2 Provide continuous, accurate and rapid situation evaluation.

1.2 In addition to the General Requirements for Electronic Navigational Aids ([IMO] Res. A.281(VII)), the ARPA should comply with the following minimum performance standards.

2 Definitions

2.1 Definitions of terms in these performance standards are given in Annex 1.

3 Performance Standards

3.1 *Detection*

3.1.1 Where a separate facility is provided for detection of targets, other than by the radar observer, it should have a performance not inferior to that which could be obtained by the use of the radar display.

3.2 *Acquisition*

3.2.1 Target acquisition may be manual or automatic. However, there should always be a facility to provide for manual acquisition and cancellation. ARPA with automatic acquisition should have a facility to suppress acquisition in certain areas. On any range scale where acquisition is suppressed over a certain area, the area of acquisition should be indicated on the display.

3.2.2 Automatic or manual acquisition should have a performance not inferior to that which could be obtained by the user of the radar display.

3.3 *Tracking*

3.3.1 The ARPA should be able to automatically track, process, simultaneously display and continuously update the information on at least:

.1 20 targets, if automatic acquisition is provided, whether automatically or manually acquired; or

.2 10 targets, if only manual acquisition is provided.

3.3.2 If automatic acquisition is provided, description of the criteria of selection of targets for tracking should be provided to the user. If the ARPA does not track all targets visible on the display, targets which are being tracked should be clearly indicated on the display. The reliability of tracking should not be less than that obtainable using manual recording of successive target positions obtained from the radar display.

3.3.3 Provided the target is not subject to target swop, the ARPA should continue to track an acquired target which is clearly distinguishable on the display for 5 out of 10 consecutive scans.

3.3.4 The possibility of tracking errors, including target swop, should be minimized by ARPA design. A qualitative description of the effects of error sources on the automatic tracking and corresponding errors should be provided to the user, including the effects of low signal to noise and low signal to clutter ratios caused by sea returns, rain, snow, low clouds and non-synchronous emission.

3.3.5 The ARPA should be able to display on request at least four equally time-spaced past positions of any targets being tracked over a period of at least eight minutes.

3.4 *Display*

3.4.1 The Display may be a separate or integral part of the ship's radar. However, the ARPA display should include all the data required to be provided by a radar display in accordance with the performance standards for navigational radar equipment adopted by the Organization.

3.4.2 The design should be such that any malfunction of ARPA parts producing information additional to information to be produced by the radar as required by the performance standards for navigational equipment adopted by IMO should not affect the integrity of the basic radar presentation.

3.4.3 The display on which ARPA information is presented should have an effective diameter of at least 340 mm.

3.4.4 The ARPA facilities should be available on at least the following range scales:

.1 12 or 16 miles;

.2 3 or 4 miles.

3.4.5 There should be a positive indication of the range scale in use.

3.4.6 The ARPA should be capable of operating with a relative motion display with ''north-up'' and either ''head-up'' or ''course-up'' azimuth stabilization. In addition, the

ARPA may also provide for a true motion display. If true motion is provided, the operator should be able to select for his display either true or relative motion. There should be a positive indication of the display mode and orientation in use.

3.4.7 The course and speed information generated by the ARPA for acquired targets should be displayed in a vector or graphic form which clearly indicates the target's predicted motion. In this regard:

.1 ARPA presenting predicted information in vector form only should have the option of both true and relative vectors;

.2 An ARPA which is capable of presenting target course and speed information in graphic form, should also, on request, provide the target's true and/or relative vector;

.3 Vectors displayed should be either time adjustable or have a fixed time-scale;

.4 A positive indication of the time-scale of the vector in use should be given.

3.4.8 The ARPA information should not obscure radar information in such a manner as to degrade the process of detecting targets. The display of ARPA data should be under the control of the radar observer. It should be possible to cancel the display of unwanted ARPA data.

3.4.9 Means should be provided to adjust independently the brilliance of the ARPA data and radar data, including complete elimination of the ARPA data.

3.4.10 The method of presentation should ensure that the ARPA data is clearly visible in general to more than one observer in the conditions of light normally experienced on the bridge of a ship by day and by night. Screening may be provided to shade the display from sunlight but not to the extent that it will impair the observer's ability to maintain a proper lookout. Facilities to adjust the brightness should be provided.

3.4.11 Provisions should be made to obtain quickly the range and bearing of any object which appears on the ARPA display.

3.4.12 When a target appears on the radar display and, in the case of automatic acquisition, enters within the acquisition area chosen by the observer or, in the case of manual acquisition, has been acquired by the observer, the ARPA should present in a period of not more than one minute an indication of the target's motion trend and display within three minutes the target's predicted motion in accordance with paragraphs 3.4.7, 3.6, 3.8.2 and 3.8.3.

3.4.13 After changing range scales on which the ARPA facilities are available or resetting the display, full plotting information should be displayed within a period of time not exceeding four scans.

3.5 *Operational Warnings*

3.5.1 The ARPA should have the capability to warn the observer with a visual and/or audible signal of any distinguishable target which closes to a range or transits a zone chosen by the observer. The target causing the warning should be clearly indicated on the display.

3.5.2 The ARPA should have the capability to warn the observer with a visual and/or audible signal of any tracked target which is predicted to close to within a minimum range and time chosen by the observer. The target causing the warning should be clearly indicated on the display.

3.5.3 The ARPA should clearly indicate if a tracked target is lost, other than out of range, and the target's last tracked position should be clearly indicated on the display.

3.5.4 It should be possible to activate or de-activate the operational warnings.

3.6 *Data Requirements*

3.6.1 At the request of the observer the following information should be immediately available from the ARPA in alphanumeric form in regard to any tracked target:

1. Present range to the target;
2. Present bearing of the target;.

.3 Predicted target range at the closest point of approach (CPA);

.4 Predicted time to CPA (TCPA);

.5 Calculated true course of target;

.6 Calculated true speed of target.

3.7 *Trial Manoeuvre*

3.7.1 The ARPA should be capable of simulating the effect on all tracked targets of an own ship manoeuvre without interrupting the updating of target information. The simulation should be initiated by the depression either of a spring-loaded switch, or of a function key, with a positive identification on the display.

3.8 *Accuracy*

3.8.1 The ARPA should provide accuracies not less than those given in paragraphs 3.8.2 and 3.8.3 for the four scenarios defined in Annex 2. With the sensor errors specified in Annex 3, the values given relate to the best possible manual plotting performance under environmental conditions of plus and minus ten degrees of roll.

3.8.2 An ARPA should present within one minute of steady state tracking the relative motion trend of a target with the following accuracy values (95 percent probability values):

Scenario/data	Relative course (degrees)	Relative speed (Knots)	CPA (n.m.)
1	11	2.8	1.6
2	7	0.6	.....
3	14	2.2	1.8
4	15	1.5	2.0

3.8.3 An ARPA should present within three minutes of steady state tracking the motion of a target with the following accuracy values (95 percent probability values):

Scenario/data	Relative course (degrees)	Relative speed (knots)	C.P.A. (n.m.)	TCPA (mins)	True course (degrees)	True speed (knots)
1	3.0	0.8	0.5	1.0	7.5	1.2
2	2.3	.3	.....	.....	2.9	.8
3	4.4	.9	.7	1.0	3.3	1.0
4	4.6	.8	.7	1.0	2.6	1.2

3.8.4 When a tracked target, or own ship, has completed a manoeuvre, the system should present in a period of not more than one minute an indication of the target's motion trend, and display within three minutes the target's predicted motion in accordance with paragraphs 3.4.7, 3.6, 3.8.2 and 3.8.3

3.8.5 The ARPA should be designed in such a manner that under the most favorable conditions of own ship motion the error contribution from the ARPA should remain insignificant compared to the errors associated with the input sensors, for scenarios of Annex 2.

3.9 *Connections with other equipment*

3.9.1 The ARPA should not degrade the performance of any equipment providing sensor inputs. The connection of the ARPA to any other equipment should not degrade the performance of that equipment.

3.10 *Performance test and warnings*

3.10.1 The ARPA should provide suitable warnings of ARPA malfunction to enable the observer to monitor the proper operation of the system. Additionally test programmes should be available so that the overall performance of ARPA can be assessed periodically against a known solution.

3.11 *Equipment used with ARPA*

3.11.1 Log and speed indicators providing inputs to ARPA equipment should be capable of providing the ship's speed through the water.

ANNEX 1 TO APPENDIX A TO § 164.38—DEFINITIONS OF TERMS TO BE USED ONLY IN CONNECTION WITH ARPA PERFORMANCE STANDARDS

Relative course—The direction of motion of a target related to own ship as deduced from a number of measurements of its range and bearing on the radar. Expressed as an angular distance from North.

Relative speed—The speed of a target related to own ship, as deduced from a number of measurements of its range and bearing on the radar.

True course—The apparent heading of a target obtained by the vectorial combination of the target's relative motion and ship's own motion[1]. Expressed as an angular distance from North.

True speed—The speed of a target obtained by the vectorial combination of its relative motion and own ship's motion[1].

Bearing—The direction of one terrestrial point from another. Expressed as an angular distance from North.

Relative motion display—The position of own ship on such a display remains fixed.

True motion display—The position of own ship on such display moves in accordance with its own motion.

Azimuth stabilization—Own ship's compass information is fed to the display so that echoes of targets on the display will not be caused to smear by changes of own ship's heading.

/North-up—The line connecting the center with the top of this display is North.

/Head-up—The line connecting the center with the top of the display is own ship heading.

/Course-up—An intended course can be set to the line connecting the center with the top of the display.

Heading—The direction in which the bow of a vessel is pointing. Expressed as an angular distance from North.

Target's predicted motion—The indication on the display of a liner extrapolation into the future of a target's motion, based on measurements of the target's range and bearing on the radar in the recent past.

Target's motion trend—An early indication of the target's predicted motion.

Radar Plotting—The whole process of target detection, tracking, calculation of parameters and display of information.

Detection—The recognition of the presence of a target.

Acquisition—The selection of those targets requiring a tracking procedure and the initiation of their tracking.

Tracking—The process of observing the sequential changes in the position of a target, to establish its motion.

Display—The plan position presentation of ARPA data with radar data.

Manual—An activity which a radar observer performs, possibly with assistance from a machine.

Automatic—An activity which is performed wholly by a machine.

[1] For the purpose of these definitions there is no need to distinguish between sea or ground stabilization.

ANNEX 2 TO APPENDIX A TO § 164.38—OPERATIONAL SCENARIOS

For each of the following scenarios predictions are made at the target position defined after previously tracking for the appropriate time of one or three minutes:

Scenario 1

Own ship course—000°
Own ship speed—10 kt
Target range—8 n.m.
Bearing of target—000°
Relative course of target—180°
Relative speed of target—20 kt

Scenario 2

Own ship course—000°
Own ship speed—10 kt
Target range—1 n.m.
Bearing of target—000°
Relative course of target—090°
Relative speed of target—10 kt

Scenario 3

Own ship course—000°
Own ship speed—5 kt
Target range—8 n.m.
Bearing of target—045°
Relative course of target—225°
Relative speed of target—20 kt

Scenario 4

Own ship course—000°
Own ship speed—25 kt
Target range—8 n.m.
Bearing of target—045°
Relative course of target—225°
Relative speed of target—20 kt

ANNEX 3 TO APPENDIX A TO § 164.38—SENSOR ERRORS

The accuracy figures quoted in paragraph 3.8 are based upon the following sensor errors and are appropriate to equipment complying with the Organization's performance standards for shipborne navigational equipment.[2]

Note: o means ''standard deviation''

[2] In calculations leading to the accuracy figures quoted in paragraph 3.8, these sensor error sources and magnitudes were used. They were arrived at during discussions with national government agencies and equipment manufacturers and are appropriate to equipments complying with the Organization's draft performance standards for radar equipment (preliminary) (NAV XXII/WP.14), gyro compasses (NAV XXI/9, Annex X) and logs (preliminary) (NAV XXII/WP.15).

Independent studies carried out by national government agencies and equipment manufacturers have resulted in similar accuracies, where comparisons were made.

Radar

Target Glint (Scintillation) (for 200 m length target)

Along length of target o = 30 m. (normal distribution)

Across beam of target o = 1 m. (normal distribution)

Roll-Pitch Bearing. The bearing error will peak in each of the four quadrants around own ship for targets on relative bearings of 045°, 135°, 225° and 315° and will be zero at relative bearings of 0°, 90°, 180° and 270°. This error has a sinusoidal variation at twice the roll frequency. For a 10° roll the mean error is 0.22° with a 0.22° peak sine wave superimposed.

Beam shape—assumed normal distribution giving bearing error with o = 0.05.

Pulse shape— assumed normal distribution giving range error with o = 20 meters.

Antenna backlash—assumed rectangular distribution giving bearing error ±0.5 maximum.

Quantization

Bearing—rectangular distribution ±0.01° maximum.

Range—rectangular distribution ±0.01 n.m. maximum.

Bearing encoder assumed to be running from a remote synchro giving bearing errors with a normal distribution o = 0.03°

Gyro compass

Calibration error 0.5°.

Normal distribution about this with o = 0.12°.

Log

Calibration error 0.5 kt.

Normal distribution about this, 3 o = 0.2 kt.

APPENDIX B TO § 164.38—U.S. MARITIME ADMINISTRATION COLLISION AVOIDANCE SYSTEM SPECIFICATION

A collision system designed as a supplement to both surface search navigational radars via interswitching shall be installed. The system shall provide unattended monitoring of all radar echoes and automatic audio and visual alarm signals that will alert the watch officer of a possible threat. The display shall be contained within a console capable of being installed adjacent to the radar displays in the wheelhouse and may form a part of the bridge console.

Provision for signal input from the ship's radars, gyro compass, and speed log, without modification to these equipments shall be made. The collision avoidance system, whether operating normally or having failed, must not introduce any spurious signals or otherwise degrade the performance of the radars, the gyro compass or the speed log.

Computer generated display data for each acquired target shall be in the form of a line or vector indicating true or relative target course, speed and both present and extrapolated future positions. Data shall be automatically displayed on a cathode ray tube or other suitable display contrivance sufficiently bright and unobstructed to permit viewing by more than one person at a time.

In addition to displaying the collision potential of the most threatening fixed and moving targets, the system shall be capable of simultaneously showing land masses.

The system display shall include a heading indication and bearing ring. The system shall also have the capability of allowing the operator to select ''head-up'' and to cancel the vector or line presentation of any of the targets. The presentation shall be nonsmearing when changing modes or display scales in order to permit rapid evaluation of the displayed data.

Target acquisition, for display data purposes, may be manual, automatic or both, as specified by Owner.

For any manual acquisition system the alarms shall be initiated by a preset minimum range; and likewise for any automatic acquisition system the alarms shall be initiated by a preset minimum acceptable passing distance (CPA—Closest Point of Approach) and a preset advance warning time (TCPA—Time to Closest Point of Approach). Means shall be provided to silence the audio alarm for a given threat but the alarm shall resound upon a subsequent threat. The visual alarm shall continue to operate until all threats have been eliminated. If the collision avoidance system fails to perform as indicated above, after the system is set for unattended monitoring, the system shall produce both audio and visual warning alarms.

The system shall be capable of simulating a trial maneuver.

In addition to the target display, an alphanumeric readout shall be provided which can present range, bearing, course, speed, CPA and TCPA for any selected target, either on the target display or by other display means.

The collision avoidance system shall be energized from the interior communications panel board in the wheelhouse.

The collision avoidance function may be incorporated in an integrated conning system, provided that failure of any other integrated system component will not degrade the collision avoidance function.

[CGD 79–148, 45 FR 54039, Aug. 14, 1980; 45 FR 71800, Oct. 30, 1980, as amended by CGD 83–004, 49 FR 43467, Oct. 29, 1984; USCG–1998–3799, 63 FR 35532, June 30, 1998; USCG–2011–0257, 76 FR 31838, June 2, 2011]

§ 164.39 Steering gear: Foreign tankers.

(a) This section applies to each foreign tanker of 10,000 gross tons or more, except a public vessel, that—

(1) Transfers oil at a port or place subject to the jurisdiction of the United States; or

(2) Otherwise enters or operates in the navigable waters of the United States, except a vessel described by § 164.02 of this part.

(b) *Definitions.* The terms used in this section are as follows:

Constructed means the same as in Chapter II–1, Regulations 1.1.2 and 1.1.3.1, of SOLAS 74.

Existing tanker means a tanker—

(1) For which the building contract is placed on or after June 1, 1979;

(2) In the absence of a building contract, the keel of which is laid or which is at a similar stage of construction on or after January 1, 1980;

(3) The delivery of which occurs on or after June 1, 1982; or

(4) That has undergone a major conversion contracted for on or after June 1, 1979; or construction of which was begun on or after January 1, 1980, or completed on or after June 1, 1982.

Public vessel, *oil*, *hazardous materials*, and *foreign vessel* mean the same as in 46 U.S.C. 2101.

SOLAS 74 means the International Convention for the Safety of Life at Sea, 1974, as amended.

Tanker means a self-propelled vessel defined as a tanker by 46 U.S.C. 2101(38) or as a tank vessel by 46 U.S.C. 2101(39).

(c) Each tanker constructed on or after September 1, 1984, must meet the applicable requirements of Chapter II–1, Regulations 29 and 30, of SOLAS 74.

(d) Each tanker constructed before September 1, 1984, must meet the requirements of Chapter II–1, Regulation 29.19, of SOLAS 74.

(e) Each tanker of 40,000 gross tons or more, constructed before September 1, 1984, that does not meet the single-failure criterion of Chapter II–1, Regulation 29.16, of SOLAS 74, must meet the requirements of Chapter II–1, Regulation 29.20, of SOLAS 74.

(f) Each tanker constructed before September 1, 1984, must meet the applicable requirements of Chapter II–1,

Regulations 29.14 and 29.15, of SOLAS 74.

[CGD 83–043, 60 FR 24771, May 10, 1995]

§ 164.40 Devices to indicate speed and distance.

(a) Each vessel required to be fitted with an Automatic Radar Plotting Aid (ARPA) under § 164.38 of this part must be fitted with a device to indicate speed and distance of the vessel either through the water or over the ground.

(b) The device must meet the following specifications:

(1) The display must be easily readable on the bridge by day or night.

(2) Errors in the indicated speed, when the vessel is operating free from shallow water effect, and from the effects of wind, current, and tide, should not exceed 5 percent of the speed of the vessel, or 0.5 knot, whichever is greater.

(3) Errors in the indicated distance run, when the vessel is operating free from shallow water effect, and from the effects of wind, current, and tide, should not exceed 5 percent of the distance run of the vessel in one hour or 0.5 nautical mile in each hour, whichever is greater.

[CGD 83–004, 49 FR 43467, Oct. 29, 1984, as amended by USCG–1998–3799, 63 FR 35532, June 30, 1998]

§ 164.41 Electronic position fixing devices.

(a) Each vessel calling at a port in the continental United States, including Alaska south of Cape Prince of Wales, except each vessel owned or bareboat chartered and operated by the United States, or by a state or its political subdivision, or by a foreign nation, and not engaged in commerce, must have a satellite navigation receiver with—

(1) Automatic acquisition of satellite signals after initial operator settings have been entered; and

(2) Position updates derived from satellite information during each usable satellite pass.

(b) A system that is found by the Commandant to meet the intent of the statements of availability, coverage, and accuracy for the U.S. Coastal Confluence Zone (CCZ) contained in the U.S. ''Federal Radionavigation Plan'' (Report No. DOD–NO 4650.4–P, I or No. DOT–TSC–RSPA–80–16, I). A person desiring a finding by the Commandant under this subparagraph must submit a written application describing the device to the Coast Guard Deputy Commander for Operations (CG–DCO), 2100 2nd St. SW., Stop 7471, Washington, DC 20593–7471. After reviewing the application, the Commandant may request additional information to establish whether or not the device meets the intent of the Federal Radionavigation Plan. Note: The Federal Radionavigation Plan is available from the National Technical Information Service, Springfield, Va. 22161, with the following Government Accession Numbers:

Vol 1, ADA 116468
Vol 2, ADA 116469
Vol 3, ADA 116470
Vol 4, ADA 116471

[USCG–2011–0257, 76 FR 31838, June 2, 2011]

§ 164.42 Rate of turn indicator.

Each vessel of 100,000 gross tons or more constructed on or after September 1, 1984 shall be fitted with a rate of turn indicator.

[CGD 83–004, 49 FR 43468, Oct. 29, 1984]

§ 164.43 Automatic Identification System Shipborne Equipment—Prince William Sound.

(a) Until December 31, 2004, each vessel required to provide automated position reports to a Vessel Traffic Service (VTS) under § 165.1704 of this subchapter must do so by an installed Automatic Identification System Shipborne Equipment (AISSE) system consisting of a:

(1) Twelve-channel all-in-view Differential Global Positioning System (dGPS) receiver;

(2) Marine band Non-Directional Beacon receiver capable of receiving dGPS error correction messages;

(3) VHF—FM transceiver capable of Digital Selective Calling (DSC) on the designated DSC frequency; and

(4) Control unit.

(b) An AISSE must have the following capabilities:

(1) Use dGPS to sense the position of the vessel and determine the time of

the position using Universal Coordinated Time (UTC);

(2) Fully use the broadcast type 1, 2, 3, 5, 6, 7, 9, and 16 messages, as specified in RTCM Recommended Standards for Differential NAVSTAR GPS Service in determining the required information;

(3) Achieve a position error which is less than ten meters (32.8 feet) 2 distance root mean square (2 drms) from the true North American Datum of 1983 (NAD 83) in the position information transmitted to a VTS;

(4) Achieve a course error of less than 0.5 degrees from true course over ground in the course information transmitted to a VTS;

(5) Achieve a speed error of less than 0.05 knots from true speed over ground in the speed information transmitted to a VTS;

(6) Receive and comply with commands broadcast from a VTS as DSC messages on the designated DSC frequency;

(7) Receive and comply with RTCM messages broadcast as minimum shift keying modulated medium frequency signals in the marine radiobeacon band, and supply the messages to the dGPS receiver;

(8) Transmit the vessel's position, tagged with the UTC at position solution, course over ground, speed over ground, and Lloyd's identification number to a VTS;

(9) Display a visual alarm to indicate to shipboard personnel when a failure to receive or utilize the RTCM messages occurs;

(10) Display a separate visual alarm which is triggered by a VTS utilizing a DSC message to indicate to shipboard personnel that the U.S. Coast Guard dGPS system cannot provide the required error correction messages; and

(11) Display two RTCM type 16 messages, one of which must display the position error in the position error broadcast.

(c) An AISSE is considered non-operational if it fails to meet the requirements of paragraph (b) of this section.

NOTE: Vessel Traffic Service (VTS) areas and operating procedures are set forth in part 161 of this chapter.

[CGD 90–020, 59 FR 36334, July 15, 1994, as amended by CGD 97–023, 62 FR 33365, June 19, 1997; USCG–2003–14757, 68 FR 39367, July 1, 2003; 68 FR 60569, Oct. 22, 2003]

§ 164.46 Automatic Identification System (AIS).

(a) The following vessels must have a properly installed, operational, type approved AIS as of the date specified:

(1) Self-propelled vessels of 65 feet or more in length, other than passenger and fishing vessels, in commercial service and on an international voyage, not later than December 31, 2004.

(2) Notwithstanding paragraph (a)(1) of this section, the following, self-propelled vessels, that are on an international voyage must also comply with SOLAS, as amended, Chapter V, regulation 19.2.1.6, 19.2.4, and 19.2.3.5 or 19.2.5.1 as appropriate (Incorporated by reference, see § 164.03):

(i) Passenger vessels, of 150 gross tonnage or more, not later than July 1, 2003;

(ii) Tankers, regardless of tonnage, not later than the first safety survey for safety equipment on or after July 1, 2003;

(iii) Vessels, other than passenger vessels or tankers, of 50,000 gross tonnage or more, not later than July 1, 2004; and

(iv) Vessels, other than passenger vessels or tankers, of 300 gross tonnage or more but less than 50,000 gross tonnage, not later than the first safety survey for safety equipment on or after July 1, 2004, but no later than December 31, 2004.

(3) Notwithstanding paragraphs (a)(1) and (a)(2) of this section, the following vessels, when navigating an area denoted in table 161.12(c) of § 161.12 of this chapter, not later than December 31, 2004:

(i) Self-propelled vessels of 65 feet or more in length, other than fishing vessels and passenger vessels certificated to carry less than 151 passengers-for-hire, in commercial service;

(ii) Towing vessels of 26 feet or more in length and more than 600 horsepower, in commercial service;

(iii) Passenger vessels certificated to carry more than 150 passengers-for-hire.

NOTE TO § 164.46(a): ''Properly installed'' refers to an installation using the guidelines set forth in IMO SN/Circ.227 (incorporated by reference, see § 164.03). Not all AIS units are able to broadcast position, course, and speed without the input of an external positioning device (e.g. dGPS); the use of other external devices (e.g. transmitting heading device, gyro, rate of turn indicator) is highly recommended, however, not required except as stated in § 164.46(a)(2). ''Type approved'' refers to an approval by an IMO recognized Administration as to comply with IMO Resolution MSC.74(69), ITU-R Recommendation M.1371–1, and IEC 61993–2 (Incorporated by reference, see § 164.03). ''Length'' refers to ''registered length'' as defined in 46 CFR part 69. ''Gross tonnage'' refers to tonnage as defined under the International Convention on Tonnage Measurement of Ships, 1969.

(b) The requirements for Vessel Bridge-to-Bridge radiotelephones in §§ 26.04(a) and (c), 26.05, 26.06 and 26.07 of this chapter also apply to AIS. The term ''effective operating condition'' used in § 26.06 of this chapter includes accurate input and upkeep of AIS data fields.

(c) The use of a portable AIS is permissible only to the extent that electromagnetic interference does not affect the proper function of existing navigation and communication equipment on board and such that only one AIS unit may be in operation at any one time.

(d) The AIS Pilot Plug, on each vessel over 1,600 gross tons on an international voyage, must be available for pilot use, easily accessible from the primary conning position of the vessel, and near a 120 Volt, AC power, 3-prong receptacle.

[USCG–2003–14757, 68 FR 60569, Oct. 22, 2003]

§ 164.51 Deviations from rules: Emergency.

Except for the requirements of § 164.53(b), in an emergency, any person may deviate from any rule in this part to the extent necessary to avoid endangering persons, property, or the environment.

[CGD 74–77, 42 FR 5956, Jan. 31, 1977]

§ 164.53 Deviations from rules and reporting: Non-operating equipment.

(a) If during a voyage any equipment required by this part stops operating properly, the person directing the movement of the vessel may continue to the next port of call, subject to the directions of the District Commander or the Captain of the Port, as provided by part 160 of this chapter.

(b) If the vessel's radar, radio navigation receivers, gyrocompass, echo depth sounding device, or primary steering gear stops operating properly, the person directing the movement of the vessel must report or cause to be reported that it is not operating properly to the nearest Captain of the Port, District Commander, or, if participating in a Vessel Traffic Service, to the Vessel Traffic Center, as soon as possible.

(Sec. 2, Pub. L. 95–474, 92 Stat. 1471 (33 U.S.C. 1221); 49 CFR 1.46(n)(4))

[CGD 74–77, 42 FR 5956, Jan. 31, 1977]

EDITORIAL NOTE: For FEDERAL REGISTER citations affecting § 164.53, see the List of CFR Sections Affected, which appears in the Finding Aids section of the printed volume and at *www.fdsys.gov*.

§ 164.55 Deviations from rules: Continuing operation or period of time.

The Captain of the Port, upon written application, may authorize a deviation from any rule in this part if he determines that the deviation does not impair the safe navigation of the vessel under anticipated conditions and will not result in a violation of the rules for preventing collisions at sea. The authorization may be issued for vessels operating in the waters under the jurisdiction of the Captain of the Port for any continuing operation or period of time the Captain of the Port specifies.

[CGD 74–77, 42 FR 5956, Jan. 31, 1977]

§ 164.61 Marine casualty reporting and record retention.

When a vessel is involved in a marine casualty as defined in 46 CFR 4.03–1, the master or person in charge of the vessel shall:

(a) Ensure compliance with 46 CFR Subpart 4.05, ''Notice of Marine Casualty and Voyage Records;'' and

(b) Ensure that the voyage records required by 46 CFR 4.05–15 are retained for:

(1) 30 days after the casualty if the vessel remains in the navigable waters of the United States; or

(2) 30 days after the return of the vessel to a United States port if the vessel departs the navigable waters of the United States within 30 days after the marine casualty.

[CGD 74–77, 42 FR 5956, Jan. 31, 1977]

§ 164.70 Definitions.

For purposes of §§164.72 through 164.82, the term—

Current edition means the most recent published version of a publication, chart, or map required by §164.72.

Currently corrected edition means a current or previous edition of a publication required by §164.72, corrected with changes that come from Notices to Mariners (NTMs) or Notices to Navigation reasonably available and that apply to the vessel's transit. Hand-annotated river maps from the U.S. Army Corps of Engineers (ACOE) are currently corrected editions if issued within the previous 5 years.

Great Lakes means the Great Lakes and their connecting and tributary waters including the Calumet River as far as the Thomas J. O'Brien Lock and Controlling Works (between miles 326 and 327), the Chicago River as far as the east side of the Ashland Avenue Bridge (between miles 321 and 322), and the Saint Lawrence River as far east as the lower exit of Saint Lambert Lock.

Merchant mariner credential or MMC means the credential issued by the Coast Guard under 46 CFR part 10. It combines the individual merchant mariner's document, license, and certificate of registry enumerated in 46 U.S.C. subtitle II part E as well as the STCW endorsement into a single credential that serves as the mariner's qualification document, certificate of identification, and certificate of service.

Swing-meter means an electronic or electric device that indicates the rate of turn of the vessel on board which it is installed.

Towing vessel means a commercial vessel engaged in or intending to engage in pulling, pushing or hauling alongside, or any combination of pulling, pushing, or hauling alongside.

Western Rivers means the Mississippi River, its tributaries, South Pass, and Southwest Pass, to the navigational-demarcation lines dividing the high seas from harbors, rivers, and other inland waters of the United States, and the Port Allen-Morgan City Alternative Route, and that part of the Atchafalaya River above its junction with the Port Allen-Morgan City Alternative Route including the Old River and the Red River and those waters specified by §§89.25 and 89.27 of this chapter, and such other, similar waters as are designated by the COTP.

[CGD 94–020, 61 FR 35072, July 3, 1996, as amended by USCG–2006–24371, 74 FR 11213, Mar. 16, 2009]

§ 164.72 Navigational-safety equipment, charts or maps, and publications required on towing vessels.

(a) Except as provided by §164.01(b), each towing vessel must be equipped with the following navigational-safety equipment:

(1) *Marine radar*. By August 2, 1997, a marine radar that meets the following applicable requirements:

(i) For a vessel of less than 300 tons gross tonnage that engages in towing on navigable waters of the U.S., including Western Rivers, the radar must meet—

(A) The requirements of the Federal Communications Commission (FCC) specified by 47 CFR part 80; and

(B) RTCM Standard for Marine Radar Equipment Installed on Ships of Less Than 300 Tons Gross Tonnage, RTCM Paper 71–95/SC112–STD, Version 1.1, display Category II and stabilization Category Bravo.

(ii) For a vessel of less than 300 tons gross tonnage that engages in towing seaward of navigable waters of the U.S. or more than three nautical miles from shore on the Great Lakes, the radar must meet—

(A) The requirements of the FCC specified by 47 CFR part 80; and

(B) RTCM Standard for Marine Radar Equipment Installed on Ships of Less Than 300 Tons Gross Tonnage, RTCM Paper 71–95/SC112–STD, Version 1.1, display Category I and stabilization Category Alpha.

(iii) For a vessel of 300 tons gross tonnage or more that engages in towing on navigable waters of the U.S., including Western rivers, the radar must meet—

(A) The requirements of the Federal Communications Commission (FCC) specified by 47 CFR part 80; and

(B) RTCM Recommended Standards for Marine Radar Equipment Installed on Ships of 300 Tons Gross Tonnage and Upwards, RTCM Paper 191–93/SC112–X, Version 1.2 except the requirements for azimuth stabilization in paragraph 3.10.

(iv) For a vessel of 300 tons gross tonnage or more that engages in towing seaward of navigable waters of the U.S. or more than three nautical miles from shore on the Great Lakes, the radar must meet—

(A) The requirements of the FCC specified by 47 CFR Part 80; and

(B) RTCM Recommended Standards for Marine Radar Equipment Installed on Ships of 300 Tons Gross Tonnage and Upwards, RTCM Paper 191–93/SC112–X, Version 1.2.

(v) A towing vessel with an existing radar must meet the applicable requirements of paragraphs (a)(1) (i) through (iv) of this section by August 2, 1998; except that a towing vessel with an existing radar must meet the display and stabilization requirements of paragraph (a)(1)(ii)(B) of this section by August 2, 2001.

(2) *Searchlight*. A searchlight, directable from the vessel's main steering station and capable of illuminating objects at a distance of at least two times the length of the tow.

(3) *VHF-FM radio*. An installation or multiple installations of VHF-FM radios as prescribed by part 26 of this chapter and 47 CFR part 80, to maintain a continuous listening watch on the designated calling channel, VHF-FM Channel 13 (except on portions of the Lower Mississippi River, where VHF-FM Channel 67 is the designated calling channel), and to separately monitor the International Distress and Calling Channel, VHF-FM Channel 16, except when transmitting or receiving traffic on other VHF-FM channels or when participating in a Vessel Traffic Service (VTS) or monitoring a channel of a VTS. (Each U.S. towing vessel of 26 feet (about 8 meters) or more in length, except a public vessel, must hold a ship-radio-station license for radio transmitters (including radar and EPIRBs), and each operator must hold a restricted operator's license or higher. To get an application for either license, call (800) 418–FORM or (202) 418–FORM, or write to the FCC; Wireless Bureau, Licensing Division; 1270 Fairfield Road; Gettysburg, PA 17325–7245.)

(4) *Magnetic compass*. Either—

(i) An illuminated swing-meter or an illuminated card-type magnetic steering compass readable from the vessel's main steering station, if the vessel engages in towing exclusively on Western Rivers; or

(ii) An illuminated card-type magnetic steering compass readable from the vessel's main steering station.

(5) *Echo depth-sounding device*. By August 2, 2001, an echo depth-sounding device readable from the vessel's main steering station, unless the vessel engages in towing exclusively on Western Rivers.

(6) *Electronic position-fixing device*. An electronic position-fixing device, a satellite navigational system such as the Global Positioning System (GPS) as required by §164.41, if the vessel engages in towing seaward of navigable waters of the U.S. or more than three nautical miles from shore on the Great Lakes.

(b) Each towing vessel must carry on board and maintain the following:

(1) *Charts or maps*. Marine charts or maps of the areas to be transited, published by the National Ocean Service (NOS), the ACOE, or a river authority that satisfy the following requirements:

(i) The charts or maps must be of a large enough scale and have enough detail to make safe navigation of the areas possible.

(ii) The charts or maps must be either—

(A) Current editions or currently corrected editions, if the vessel engages in towing exclusively on navigable waters of the U.S., including Western Rivers; or

(B) Currently corrected editions, if the vessel engages in towing seaward of navigable waters of the U.S. or more than three nautical miles from shore on the Great Lakes.

(iii) The charts or maps may be, instead of charts or maps required by

paragraphs (b)(1) (i) and (ii) of this section, currently corrected marine charts or maps, or applicable extracts, published by a foreign government. These charts or maps, or applicable extracts, must contain information similar to that on the charts or maps required by paragraphs (b)(1) (i) and (ii) of this section, be of large enough scale, and have enough detail to make safe navigation of the areas possible, and must be currently corrected.

(2) *General publications.* A currently corrected edition of, or an applicable currently corrected extract from, each of the following publications for the area to be transited:

(i) If the vessel is engaged in towing exclusively on Western Rivers—

(A) U.S. Coast Guard Light List;

(B) Applicable Notices to Navigation published by the ACOE, or Local Notices to Mariners (LNMs) published by the Coast Guard, for the area to be transited, when available; and

(C) River-current tables published by the ACOE or a river authority, if available.

(ii) If the vessel is engaged other than in towing exclusively on Western Rivers—

(A) Coast Guard Light List;

(B) Notices to Mariners published by the National Imagery and Mapping Agency, or LNMs published by the Coast Guard;

(C) Tidal-current tables published by private entities using data provided by the NOS, or river-current tables published by the ACOE or a river authority:

(D) Tide tables published by private entities using data provided by the NOS; and

(E) U.S. Coast Pilot.

(c) Table 164.72, following, summarizes the navigational-safety equipment, charts or maps, and publications required for towing vessels of 12 meters or more in length engaged in towing:

TABLE 164.72—EQUIPMENT, CHARTS OR MAPS, AND PUBLICATIONS FOR TOWING VESSELS OF 12 METERS OR MORE IN LENGTH

	Western rivers	U.S. navigable waters other than western rivers	Waters seaward of navigable waters and 3 NM or more from shore on the Great Lakes
Marine Radar:			
Towing Vessels of Less Than 300 GT.	RTCM Paper 71–95/SC112–STD Version 1.1, Display Category II[1] Stabilization Category BRAVO.	RTCM Paper 71–95/SC112–STD Version 1.1, Display Category II[1] Stabilization Category BRAVO.	RTCM Paper 71–95/SC112–STD Version 1.1, Display Category I[2] Stabilization Category ALPHA.
Towing Vessels of 300 GT or More.	RTCM Paper 191–93/SC112–X Version 1.2 (except the Azmuth stabilization requirement in paragraph 3.10).[1].	RTCM Paper 191–93/SC112–X Version 1.2 (except the Azmuth stabilization requirement in paragraph 3.10).[1].	RTCM Paper 191–93/SC112–X Version 1.2.[1]
Searchlight	X	X	X
VHF-FM Radio	X	X	X
Magnetic Compass	X[3]	X	X
Swing-Meter	X[3]		
Echo Depth-Sounding Device.		X	X
Electronic Position-Fixing Device.			X
Charts or Maps	(1) Large enough scale (2) Current edition or currently corrected edition.	(1) Large enough scale (2) Current edition or currently corrected edition.	(1) Large enough scale. (2) Currently corrected edition.
General Publications	(1) U.S. Coast Guard Light List (2) Notices to Navigation or Local Notices to Mariners. (3) River-current Tables	(1) U.S. Coast Guard Light List (2) Local Notices to Mariners (3) Tidal-current Tables (4) Tide Tables (5) U.S. Coast Pilot	(1) U.S. Coast Guard Light List. (2) Local Notices to Mariners. (3) Tidal-current Tables. (4) Tide Tables. (5) U.S. Coast Pilot.

NOTES:
[1] Towing vessels with existing radar must meet this requirement by August 2, 1998.
[2] Towing vessels with existing radar must meet this requirement by August 2, 1998 but do not need to meet the display and stabilization requirements until August 2, 2001.
[3] A towing vessel may carry either a swing-meter or a magnetic compass.

[CGD 94–020, 61 FR 35073, July 3, 1996, as amended by CGD 97–034, 62 FR 40272, July 28, 1997; USCG–1999–5832, 64 FR 34715, June 29, 1999; USCG–2001–9286, 66 FR 33641, June 25, 2001; USCG–2010–0351, 75 FR 36287, June 25, 2010; USCG–2011–0257, 76 FR 31838, June 2, 2011]

§ 164.74 Towline and terminal gear for towing astern.

(a) *Towline*. The owner, master, or operator of each vessel towing astern shall ensure that the strength of each towline is adequate for its intended service, considering at least the following factors:

(1) The size and material of each towline must be—

(i) Appropriate for the horsepower or bollard pull of the vessel;

(ii) Appropriate for the static loads and dynamic loads expected during the intended service;

(iii) Appropriate for the sea conditions expected during the intended service;

(iv) Appropriate for exposure to the marine environment and to any chemicals used or carried on board the vessel;

(v) Appropriate for the temperatures of normal stowage and service on board the vessel;

(vi) Compatible with associated navigational-safety equipment; and

(vii) Appropriate for the likelihood of mechanical damage.

(2) Each towline as rigged must be—

(i) Free of knots;

(ii) Spliced with a thimble, or have a poured socket at its end; and

(iii) Free of wire clips except for temporary repair, for which the towline must have a thimble and either five wire clips or as many wire clips as the manufacturer specifies for the nominal diameter and construction of the towline, whichever is more.

(3) The condition of each towline must be monitored through the—

(i) Keeping on board the towing vessel or in company files of a record of the towline's initial minimum breaking strength as determined by the manufacturer, by a classification (''class'') society authorized in § 157.04 of this chapter, or by a tensile test that meets API Specification 9A, Specification for Wire Rope, Section 3; ASTM D 4268 (incorporated by reference, see § 164.03), Standard Test Method for Testing Fiber Ropes; or Cordage Institute CIA 3, Standard Test Methods for Fiber Rope Including Standard Terminations;

(ii) If the towline is purchased from another owner, master, or operator of a vessel with the intent to use it as a towline or if it is retested for any reason, keeping on board the towing vessel or in company files of a record of each retest of the towline's minimum breaking strength as determined by a class society authorized in § 157.04 of this chapter or by a tensile test that meets API Specification 9A, Section 3; ASTM D 4268 (incorporated by reference, see § 164.03) or Cordage Institute CIA 3, Standard Test Methods;

(iii) Conducting visual inspections of the towline in accordance with the manufacturer's recommendations, or at least monthly, and whenever the serviceability of the towline is in doubt (the inspections being conducted by the owner, master, or operator, or by a person on whom the owner, master, or operator confers the responsibility to take corrective measures appropriate for the use of the towline);

(iv) Evaluating the serviceability of the whole towline or any part of the towline, and removing the whole or part from service either as recommended by the manufacturer or a class society authorized in § 157.04 of this chapter or in accordance with a replacement schedule developed by the owner, master, or operator that accounts for at least the—

(A) Nautical miles on, or time in service of, the towline;

(B) Operating conditions experienced by the towline;

(C) History of loading of the towline;

(D) Surface condition, including corrosion and discoloration, of the towline;

(E) Amount of visible damage to the towline;

(F) Amount of material deterioration indicated by measurements of diameter and, if applicable, measurements of lay extension of the towline; and

(G) Point at which a tensile test proves the minimum breaking strength of the towline inadequate by the standards of paragraph (a)(1) of this section, if necessary; and

(v) Keeping on board the towing vessel or in company files of a record of the material condition of the towline when inspected under paragraphs (a)(3)(iii) and (iv) of this section. Once this record lapses for three months or more, except when a vessel is laid up or

out of service or has not deployed its towline, the owner, master, or operator shall retest the towline or remove it from service.

(b) *Terminal gear*. The owner, master, or operator of each vessel towing astern shall ensure that the gear used to control, protect, and connect each towline meets the following criteria:

(1) The material and size of the terminal gear are appropriate for the strength and anticipated loading of the towline and for the environment;

(2) Each connection is secured by at least one nut with at least one cotter pin or other means of preventing its failure;

(3) The lead of the towline is appropriate to prevent sharp bends in the towline from fairlead blocks, chocks, or tackle;

(4) There is provided a method, whether mechanical or non-mechanical, that does not endanger operating personnel but that easily releases the towline;

(5) The towline is protected from abrasion or chafing by chafing gear, lagging, or other means;

(6) Except on board a vessel towing in ice on Western Rivers or one using a towline of synthetic or natural fiber, there is fitted a winch that evenly spools and tightly winds the towline; and

(7) If a winch is fitted, there is attached to the main drum a brake that has holding power appropriate for the horsepower or bollard pull of the vessel and can be operated without power to the winch.

[CGD 94–020, 61 FR 35074, July 3, 1996, as amended by USCG–1999–5151, 64 FR 67176, Dec. 1, 1999]

§ 164.76 Towline and terminal gear for towing alongside and pushing ahead.

The owner, master, or operator of each vessel towing alongside or pushing ahead shall ensure that the face wires, spring lines, and push gear used—

(a) Are appropriate for the vessel's horsepower;

(b) Are appropriate for the arrangement of the tow;

(c) Are frequently inspected; and

(d) Remain serviceable.

[CGD 94–020, 61 FR 35075, July 3, 1996]

§ 164.78 Navigation under way: Towing vessels.

(a) The owner, master, or operator of each vessel towing shall ensure that each person directing and controlling the movement of the vessel—

(1) Understands the arrangement of the tow and the effects of maneuvering on the vessel towing and on the vessel, barge, or object being towed;

(2) Can fix the position of the vessel using installed navigational equipment, aids to navigation, geographic reference-points, and hydrographic contours;

(3) Does not fix the position of the vessel using buoys alone (Buoys are aids to navigation placed in approximate positions either to alert mariners to hazards to navigation or to indicate the orientation of a channel. They may not maintain exact charted positions, because strong or varying currents, heavy seas, ice, and collisions with vessels can move or sink them or set them adrift. Although they may corroborate a position fixed by other means, they cannot fix a position; however, if no other aids are available, buoys alone may establish an estimated position.);

(4) Evaluates the danger of each closing visual or radar contact;

(5) Knows and applies the variation and deviation, where a magnetic compass is fitted and where charts or maps have enough detail to enable this type of correction;

(6) Knows the speed and direction of the current, and the set, drift, and tidal state for the area to be transited;

(7) Proceeds at a safe speed taking into account the weather, visibility, density of traffic, draft of tow, possibility of wake damage, speed and direction of the current, and local speed-limits; and

(8) Monitors the voyage plan required by § 164.80.

(b) The owner, master, or operator of each vessel towing shall ensure that the tests and inspections required by

§ 164.80 are conducted and that the results are entered in the log or other record carried on board.

[CGD 94–020, 61 FR 35075, July 3, 1996, as amended by USCG–2000–6931, 68 FR 22610, Apr. 29, 2003; 69 FR 34068, June 18, 2004]

§ 164.80 Tests, inspections, and voyage planning.

(a) The owner, master, or operator of each towing vessel of less than 1,600 GT shall ensure that the following tests and inspections of gear occur before the vessel embarks on a voyage of more than 24 hours or when each new master or operator assumes command:

(1) *Steering-systems.* A test of the steering-gear-control system; a test of the main steering gear from the alternative power supply, if installed; a verification of the rudder-angle indicator relative to the actual position of the rudder; and a visual inspection of the steering gear and its linkage.

(2) *Navigational equipment.* A test of all installed navigational equipment.

(3) *Communications.* Operation of all internal vessel control communications and vessel-control alarms, if installed.

(4) *Lights.* Operation of all navigational lights and all searchlights.

(5) *Terminal gear.* Visual inspection of tackle; of connections of bridle and towing pendant, if applicable; of chafing gear; and of the winch brake, if installed.

(6) *Propulsion systems.* Visual inspection of the spaces for main propulsion machinery, of machinery, and of devices for monitoring machinery.

(b) The owner, master, or operator of each towing vessel of 1,600 GT or more shall ensure that the following tests of equipment occur at the frequency required by § 164.25 and that the following inspections of gear occur before the vessel embarks on a voyage of more than 24 hours or when each new master or operator assumes command:

(1) *Navigational equipment.* Tests of onboard equipment as required by § 164.25.

(2) *Terminal gear.* Visual inspection of tackle; of connections of bridle and towing pendant, if applicable; of chafing gear; and of the winch brake, if installed.

(c)(1) The voyage-planning requirements outlined in this section do not apply to you if your towing vessel is—

(i) Used solely for any of the following services or any combination of these services—

(A) Within a limited geographic area, such as a fleeting-area for barges or a commercial facility, and used for restricted service, such as making up or breaking up larger tows;

(B) For harbor-assist;

(C) For assistance towing as defined by 46 CFR 10.103;

(D) For response to emergency or pollution;

(ii) A public vessel that is both owned, or demise chartered, and operated by the United States Government or by a government of a foreign country; and that is not engaged in commercial service;

(iii) A foreign vessel engaged in innocent passage; or

(iv) Exempted by the Captain of the Port (COTP).

(2) If you think your towing vessel should be exempt from these voyage planning requirements for a specified route, you should submit a written request to the appropriate COTP. The COTP will provide you with a written response granting or denying your request.

(3) If any part of a towing vessel's intended voyage is seaward of the baseline (*i.e.*, the shoreward boundary) of the territorial sea of the U.S., then the owner, master, or operator of the vessel, employed to tow a barge or barges, must ensure that the voyage with the barge or barges is planned, taking into account all pertinent information before the vessel embarks on the voyage. The master must check the planned route for proximity to hazards before the voyage begins. During a voyage, if a decision is made to deviate substantially from the planned route, then the master or mate must plan the new route before deviating from the planned route. The voyage plan must follow company policy and consider the following (related requirements noted in parentheses):

(i) Applicable information from nautical charts and publications (also see paragraph (b) of section 164.72), including Coast Pilot, Coast Guard Light

List, and Coast Guard Local Notice to Mariners for the port of departure, all ports of call, and the destination;

(ii) Current and forecast weather, including visibility, wind, and sea state for the port of departure, all ports of call, and the destination (also see paragraphs (a)(7) of section 164.78 and (b) of section 164.82);

(iii) Data on tides and currents for the port of departure, all ports of call, and the destination, and the river stages and forecast, if appropriate;

(iv) Forward and after drafts of the barge or barges and under-keel and vertical clearances (air-gaps) for all bridges, ports, and berthing areas;

(v) Pre-departure checklists;

(vi) Calculated speed and estimated time of arrival at proposed waypoints;

(vii) Communication contacts at any Vessel Traffic Services, bridges, and facilities, and any port-specific requirements for VHF radio;

(viii) Any master's or operator's standing orders detailing closest points of approach, special conditions, and critical maneuvers; and

(ix) Whether the towing vessel has sufficient power to control the tow under all foreseeable circumstances.

[CGD 94–020, 61 FR 35075, July 3, 1996, as amended by USCG–2000–6931, 68 FR 22610, Apr. 29, 2003; 69 FR 34068, June 18, 2004]

§ 164.82 Maintenance, failure, and reporting.

(a) *Maintenance.* The owner, master, or operator of each towing vessel shall maintain operative the navigational-safety equipment required by § 164.72.

(b) *Failure.* If any of the navigational-safety equipment required by § 164.72 fails during a voyage, the owner, master, or operator of the towing vessel shall exercise due diligence to repair it at the earliest practicable time. He or she shall enter its failure in the log or other record carried on board. The failure of equipment, in itself, does not constitute a violation of this rule; nor does it constitute unseaworthiness; nor does it obligate an owner, master, or operator to moor or anchor the vessel. However, the owner, master, or operator shall consider the state of the equipment—along with such factors as weather, visibility, traffic, and the dictates of good seamanship—in deciding whether it is safe for the vessel to proceed.

(c) *Reporting.* The owner, master, or operator of each towing vessel whose equipment is inoperative or otherwise impaired while the vessel is operating within a Vessel Traffic Service (VTS) Area shall report the fact as required by 33 CFR 161.124. (33 CFR 161.124 requires that each user of a VTS report to the Vessel Traffic Center as soon as practicable:

(1) Any absence or malfunction of vessel-operating equipment for navigational safety, such as propulsion machinery, steering gear, radar, gyrocompass, echo depth-sounding or other sounding device, automatic dependent surveillance equipment, or navigational lighting;

(2) Any condition on board the vessel likely to impair navigation, such as shortage of personnel or lack of current nautical charts or maps, or publications; and

(3) Any characteristics of the vessel that affect or restrict the maneuverability of the vessel, such as arrangement of cargo, trim, loaded condition, under-keel clearance, and speed.)

(d) *Deviation and authorization.* The owner, master, or operator of each towing vessel unable to repair within 96 hours an inoperative marine radar required by § 164.72(a) shall so notify the Captain of the Port (COTP) and shall seek from the COTP both a deviation from the requirements of this section and an authorization for continued operation in the area to be transited. Failure of redundant navigational-safety equipment, including but not limited to failure of one of two installed radars, where each satisfies § 164.72(a), does not necessitate either a deviation or an authorization.

(1) The initial notice and request for a deviation and an authorization may be spoken, but the request must also be written. The written request must explain why immediate repair is impracticable, and state when and by whom the repair will be made.

(2) The COTP, upon receiving even a spoken request, may grant a deviation and an authorization from any of the provisions of §§ 164.70 through 164.82 for a specified time if he or she decides that they would not impair the safe

navigation of the vessel under anticipated conditions.

[CGD 94–020, 61 FR 35075, July 3, 1996]

PART 165—REGULATED NAVIGATION AREAS AND LIMITED ACCESS AREAS

Subpart A—General

Sec.
165.1 Purpose of part.
165.3 Definitions.
165.5 Establishment procedures.
165.7 Notification.
165.8 Geographic coordinates.
165.9 Geographic application of limited and controlled access areas and regulated navigation areas.

Subpart B—Regulated Navigation Areas

165.10 Regulated navigation areas.
165.11 Vessel operating requirements (regulations).
165.13 General regulations.

Subpart C—Safety Zones

165.20 Safety zones.
165.23 General regulations

Subpart D—Security Zones

165.30 Security zones.
165.33 General regulations.

Subpart E—Restricted Waterfront Areas

165.40 Restricted waterfront areas.

Subpart F—Specific Regulated Navigation Areas and Limited Access Areas

FIRST COAST GUARD DISTRICT

165.T01–0174 Regulated Navigation Area; Tappan Zee Bridge Construction Project, Hudson River; South Nyack and Tarrytown, NY.
165.T01–0329 Regulated Navigation Area; Maine Kennebec Bridge Construction and Removal, Kennebec River, Richmond, ME.
165.T01–0471 Safety Zone; Belt Parkway Bridge Construction, Gerritsen Inlet, Brooklyn, NY.
165.T01–0623 Regulated Navigation Area: Thames River New London, CT.
165.T01–0824 Regulated Navigation Area; Housatonic River Bridge Replacement Operations; Stratford, CT.
165.T01–0876 Regulated Navigation Area—Weymouth Fore River, Fore River Bridge Construction, Weymouth and Quincy, MA.
165.T01–1130 Regulated Navigation Area; S99 Alford Street Bridge rehabilitation project, Mystic River, MA.
165.100 Regulated Navigation Area: Navigable waters within the First Coast Guard District.
165.101 Kittery, Maine—regulated navigation area.
165.102 Security Zone: Walkers Point, Kennebunkport, ME.
165.103 Safety and Security Zones; LPG Vessel Transits in Portland, Maine, Captain of the Port Zone, Portsmouth Harbor, Portsmouth, New Hampshire.
165.104 Safety Zone: Vessel Launches, Bath Iron Works, Kennebec River, Bath, Maine.
165.105 Security Zones; Passenger Vessels, Portland, Maine, Captain of the Port Zone.
165.106 Security Zone: Seabrook Nuclear Power Plant, Seabrook, New Hampshire.
165.110 Safety and Security Zone; Liquefied Natural Gas Carrier Transits and Anchorage Operations, Boston, Massachusetts.
165.111 Safety Zone: Boston Harbor, Boston, Massachusetts.
165.112 Safety Zone: USS CASSIN YOUNG, Boston, Massachusetts.
165.113 Security Zone: Dignitary arrival/departure Logan International Airport, Boston, MA.
165.114 Safety and Security Zones: Escorted Vessels—Boston Harbor, Massachusetts.
165.115 Safety and Security Zones; Pilgrim Nuclear Power Plant, Plymouth, Massachusetts.
165.116 Safety and Security Zones; Salem and Boston Harbors, Massachusetts.
165.117 Regulated Navigation Areas, Safety and Security Zones: Deepwater Ports, First Coast Guard District.
165.118 Safety Zones; recurring annual events held in Coast Guard Sector Boston Captain of the Port Zone.
165.119 Safety Zone; Captain of the Port Boston Fireworks display zones, Boston Harbor, Boston, MA.
165.121 Safety and Security Zones: High Interest Vessels, Narragansett Bay, Rhode Island.
165.122 Regulated Navigation Area: Navigable waters within Narragansett Bay and the Providence River, Rhode Island.
165.123 Cruise Ships, Sector Southeastern New England Captain of the Port (COTP) Zone.
165.125 Regulated Navigation Area; EPA Superfund Site, New Bedford Harbor, Massachusetts.
165.130 Sandy Hook Bay, New Jersey—security zone.
165.141 Safety Zone: Sunken vessel EMPIRE KNIGHT, Boon Island, ME.
165.150 New Haven Harbor, Quinnipiac River, Mill River.

165.151 Safety Zones; Fireworks Displays, Air Shows and Swim Events in the Captain of the Port Long Island Sound Zone.
165.153 Regulated Navigation Area: Long Island Sound Marine Inspection and Captain of the Port Zone.
165.154 Safety and Security Zones; Captain of the Port Long Island Sound Zone Safety and Security Zones.
165.156 Regulated Navigation Area: East Rockaway Inlet to Atlantic Beach Bridge, Nassau County, Long Island, New York.
165.160 Safety Zones; fireworks displays and swim events in Coast Guard Captain of the Port New York Zone.
165.163 Safety Zones; Port of New York/New Jersey Fleet Week.
165.164 Regulated Navigation Areas, Security Zones: Dignitary Arrival/Departure and United Nations Meetings, New York, NY.
165.165 Regulated Navigation Area; Hudson River South of the Troy Locks, NY.
165.166 Safety zone: Macy's July 4th Fireworks, East River, NY.
165.169 Safety and Security Zones: New York Marine Inspection Zone and Captain of the Port Zone.
165.170 Safety Zone; Military Munitions Recovery, Raritan River, Raritan, NJ.
165.171 Safety Zones for fireworks displays and swim events held in Coast Guard Sector Northern New England Captain of the Port Zone.
165.172 Safety Zone; Underwater Hazard, Gravesend Bay, Brooklyn, NY.
165.173 Safety Zones for annually recurring marine events held in Coast Guard Southeastern New England Captain of the Port Zone.
165.202 [Reserved]

FIFTH COAST GUARD DISTRICT

165.T05–0145 Safety Zone, Barnegat Inlet; Barnegat Light, NJ.
165.T05–0330 Safety Zone, Shallowbag Bay; Manteo, NC.
165.T05–0494 Safety Zone, Atlantic Ocean; Ocean City, NJ.
165.T05–0495 Safety Zone, Sugar House Casino Fireworks Display, Delaware River; Philadelphia, PA.
165.T05–0501 Safety Zone, Delaware River; Philadelphia, PA.
165.T05–0511 Safety Zone, Delaware River; Philadelphia, PA.
165.T05–0767 Security Zone, Baltimore Harbor, Baltimore's Inner Harbor; Baltimore, MD.
165.500 Safety/Security Zones; Chesapeake Bay, Maryland.
165.501 Chesapeake Bay entrance and Hampton Roads, VA and adjacent waters—Regulated Navigation Area.
165.502 Safety and Security Zone; Cove Point Liquefied Natural Gas Terminal, Chesapeake Bay, Maryland.
165.503 Security Zone; Captain of the Port Hampton Roads Zone.
165.504 Newport News Shipbuilding and Dry Dock Company Shipyard, James River, Newport News, Va.
165.505 Security Zone; Calvert Cliffs Nuclear Power Plant, Chesapeake Bay, Calvert County, Maryland.
165.506 Safety Zones; Fireworks Displays in the Fifth Coast Guard District.
165.507 Security Zone; Chesapeake Bay, between Sandy Point and Kent Island, MD.
165.508 Security Zone; Georgetown Channel, Potomac River, Washington, DC.
165.509 Security Zone; Severn River and College Creek, Annapolis, MD.
165.510 Delaware Bay and River, Salem River, Christina River and Schuylkill River-Regulated Navigation Area.
165.511 Security Zone; Atlantic Ocean, Chesapeake & Delaware Canal, Delaware Bay, Delaware River and its tributaries.
165.512 Safety Zone; Patapsco River, Northwest and Inner Harbors, Baltimore, MD.
165.513 Safety Zone; Magothy River, Sillery Bay, MD.
165.514 Safety Zone: Atlantic Intracoastal Waterway and connecting waters, vicinity of Marine Corps Base Camp Lejeune, North Carolina.
165.515 Safety Zone: Cape Fear River, Wilmington, North Carolina.
165.518 Security Zone; Waters of the Fifth Coast Guard District.
165.530 Safety Zone: Cape Fear and Northeast Cape Fear Rivers, NC.
165.535 Safety Zone: Atlantic Ocean, Vicinity of Cape Henlopen State Park, Delaware.
165.540 Regulated Navigation Area; Cape Fear River, Northeast Cape Fear River, Wilmington, North Carolina
165.552 Security Zone; Oyster Creek Generation Station, Forked River, Ocean County, New Jersey.
165.553 Security Zone; Salem and Hope Creek Generation Stations, Delaware River, Salem County, New Jersey.
165.554 Security Zone; Three Mile Island Generating Station, Susquehanna River, Dauphin County, Pennsylvania.
165.555 Safety Zone; Delaware River.
165.556 Regulated Navigation Area; Chesapeake and Delaware Canal, Chesapeake City Anchorage Basin, MD.

SEVENTH COAST GUARD DISTRICT

165.T07–0161 Safety Zone; Xterra Swim, Myrtle Beach, SC.
165.701 Vicinity, Kennedy Space Center, Merritt Island, Florida—security zone.
165.703 Tampa Bay, Florida—Safety Zone.
165.704 Safety Zone: Tampa Bay, Florida.

165.T0704 Safety Zone: Savannah River, Savannah, Georgia.
165.705 Port Canaveral Harbor, Cape Canaveral, Florida.
165.708 Safety/Security Zone; Charleston Harbor and Cooper River, Charleston, SC.
165.709 Security Zone; Charleston Harbor, Cooper River, South Carolina.
165.711 Safety Zone: Port Everglades, Fort Lauderdale, FL.
165.714 Regulated Navigation Area; Atlantic Ocean, Charleston, SC.
165.720 Safety/Security Zone: St. Johns River, Jacksonville, FL.
165.721 Safety Zone: St. Johns River, Jacksonville, FL.
165.722 Security Zone: St. Johns River, Jacksonville, Florida.
165.726 Regulated Navigation Areas; Miami River, Miami, Florida.
165.728 Jacksonville, Florida—safety zones.
165.729 Jacksonville Harbor, Florida—security zone.
165.730 King's Bay, Georgia—Regulated navigation area.
165.731 Safety/Security Zone: Cumberland Sound, Georgia and St. Marys River Entrance Channel.
165.749 Security Zone: Escorted Vessels, Savannah, Georgia, Captain of the Port Zone.
165.751 Security Zone: LNG mooring slip, Savannah River, Savannah, Georgia.
165.752 Sparkman Channel, Tampa, Florida—regulated navigation area.
165.753 Regulated navigation area; Tampa Bay, Florida.
165.754 Safety Zone: San Juan Harbor, San Juan, PR.
165.755 Safety Zone: Guayanilla, Puerto Rico.
165.756 Regulated Navigation Area; Savannah River, Georgia.
165.757 Safety Zones; Ports of Ponce, Tallaboa, and Guayanilla, Puerto Rico and Limetree Bay, St. Croix, U.S.V.I.
165.758 Security Zone; San Juan, Puerto Rico.
165.759 Security Zones; Ports of Jacksonville, Fernandina, and Canaveral, Florida.
165.760 Security Zones; Tampa Bay, Port of Tampa, Port of Saint Petersburg, Port Manatee, Rattlesnake, Old Port Tampa, Big Bend, Weedon Island, and Crystal River, Florida.
165.761 Security Zones; Port of Palm Beach, Port Everglades, Port of Miami, and Port of Key West, Florida.
165.762 Security Zone; St. Thomas, U.S. Virgin Islands.
165.763 Moving and Fixed Security Zone, Port of Fredericksted, Saint Croix, U.S. Virgin Islands.
165.764 [Reserved]
165.765 Regulated Navigation Area; Port Everglades Harbor, Fort Lauderdale, Florida.
165.766 Security Zone: HOVENSA Refinery, St. Croix, U.S. Virgin Islands.
165.767 Security Zone; Manbirtee Key, Port of Manatee, Florida.
165.768 Security Zone; MacDill Air Force Base, Tampa Bay, FL.
165.769 Security Zone; Escorted Vessels, Charleston, South Carolina, Captain of the Port Zone.
165.770 Security Zone: HOVENSA Refinery, St. Croix, U.S. Virgin Islands.
165.771 Safety Zone; Bahia de Ponce, Puerto Rico.
165.773 Security Zone; Escorted Vessels in Captain of the Port Zone Jacksonville, Florida.
165.775 Safety Zone; Captain of the Port Zone Jacksonville; Offshore Cape Canaveral, Florida.
165.776 Security Zone; Coast Guard Base San Juan, San Juan Harbor, Puerto Rico.
165.777 Security Zone; West Basin, Port Canaveral Harbor, Cape Canaveral, Florida.
165.778 Security Zone; Port of Mayaguez, Puerto Rico.
165.779 Regulated Navigation Area; Columbus Day Weekend, Biscayne Bay, Miami, FL.

EIGHTH COAST GUARD DISTRICT

165.T08–0080 Safety Zone; Cincinnati Reds Fireworks Displays Ohio River, Mile 470.1–470.4, Cincinnati, OH.
165.T08–0238 Safety Zone; Cincinnati Symphony Orchestra Fireworks Displays Ohio River, Mile 460.9–461.3, Cincinnati, OH.
165.T08–0698 Safety Zone; Port of Galveston, Pelican Island Bridge Repair.
165.T08–0994 Security Zone; Mississippi River, New Orleans, LA.
165.801 Annual fireworks displays and other events in the Eighth Coast Guard District requiring safety zones.
165.802 Lower Mississippi River, vicinity of Old River Control Structure—Safety Zone.
165.803 Mississippi River—regulated navigation area.
165.804 Snake Island, Texas City, Texas; mooring and fleeting of vessels—safety zone.
165.805 Security Zones; Calcasieu River and Ship Channel, Louisiana.
165.806 Sabine Neches Waterway, Texas—regulated navigation area.
165.807 Calcasieu River, Louisiana—regulated navigation area.
165.808 Corpus Christi Ship Channel, Corpus Christi, TX, safety zone.
165.809 Security Zones; Port of Port Lavaca-Point Comfort, Point Comfort, TX and Port of Corpus Christi Inner Harbor, Corpus Christi, TX.

165.810 Mississippi River, LA-regulated navigation area.
165.811 Atchafalaya River, Berwick Bay, LA-regulated navigation area.
165.812 Security Zones; Lower Mississippi River, Southwest Pass Sea Buoy to Mile Marker 96.0, New Orleans, LA.
165.813 Security Zones; Ports of Houston and Galveston, TX.
165.814 Security Zones; Captain of the Port Houston-Galveston Zone.
165.815 Ohio River at Louisville, KY; regulated navigation area.
165.817 Arkansas River, Mile 118.2 to 125.4, Little Rock Arkansas—regulated navigation area.
165.818 Moving Security Zones, for certain vessels in Freeport Entrance Channel, Freeport, Texas.
165.819 Security Zone; Sabine Bank Channel, Sabine Pass Channel and Sabine-Neches Waterway, TX.
165.820 Security Zone; Ohio River, Mile 34.6 to 35.1, Shippingport, Pennsylvania.
165.821 Ohio River at Cincinnati, OH; regulated navigation area.
165.822 Safety Zone; Fireworks Display, Kanawha River, WV.
165.825 Security Zones; Captain of the Port St. Louis, Missouri.
165.827 Regulated Navigation Area; Galveston Channel, TX.
165.830 Regulated Navigation Area; Reporting Requirements for Barges Loaded with Certain Dangerous Cargoes, Inland Rivers, Eighth Coast Guard District.
165.835 Security Zone; Port of Mobile, Mobile Ship Channel, Mobile, AL.
165.836 Security Zone; Escorted Vessels, Mobile, Alabama, Captain of the Port.
165.837 Safety Zone; Invista Inc Facility Docks, Victoria Barge Canal, Victoria, Texas.
165.838 Regulated Navigation Area; Gulf Intracoastal Waterway, Inner Harbor Navigation Canal, New Orleans, LA.
165.839 Safety zone; large cruise ships; Lower Mississippi River, Southwest Pass Sea Buoy to Mile Marker 96.0, New Orleans, LA.
165.840 Regulated Navigation Area, Gulf of Mexico: Mississippi Canyon Block 20, South of New Orleans, LA.
165.841 Safety Zone; Barge Launches; Gulfport Lake; Gulfport, MS.

NINTH COAST GUARD DISTRICT

165.T09–0140 Safety Zone; USA Triathlon, Milwaukee Harbor, Milwaukee, Wisconsin.
165.T09–0971 Safety zone; overhead cable replacement, Maumee River, Toledo, OH.
165.901 Great Lakes—regulated navigation areas.
165.902 Niagara River at Niagara Falls, New York—safety zone.
165.903 Safety Zones: Cuyahoga River and Old River, Cleveland, OH.
165.904 Lake Michigan at Chicago Harbor & Burnham Park Harbor—Safety and Security Zone.
165.905 USX Superfund Site Safety Zones: St. Louis River.
165.906 Lakeside Yacht Club in Cleveland Harbor, Cleveland, OH—regulated navigation areas.
165.907 [Reserved]
165.909 [Reserved]
165.910 Security Zones; Captain of the Port Lake Michigan.
165.911 Security Zones; Captain of the Port Buffalo Zone.
165.912 Security Zone; Lake Erie, Perry, OH.
165.914 [Reserved]
165.915 Security zones; Captain of the Port Detroit.
165.916 Security Zones; Captain of the Port Milwaukee Zone, Lake Michigan.
165.918 Safety Zones; Annual events requiring safety zones in the Captain of the Port Sault Sainte Marie zone.
165.920 Regulated Navigation Area: USCG Station Port Huron, Port Huron, MI, Lake Huron.
165.921 Regulated Navigation Area; Reporting Requirements for Barges Loaded with Certain Dangerous Cargoes, Illinois Waterway System located within the Ninth Coast Guard District.
165.923 Safety Zone and Regulated Navigation Area, Chicago Sanitary and Ship Canal, Romeoville, IL.
165.927 Safety Zone; St. Louis River, Duluth/Interlake Tar Remediation Site, Duluth, MN.
165.928 Security Zone; Mackinac Bridge, Straits of Mackinac, Michigan.
165.929 Safety Zones; Annual events requiring safety zones in the Captain of the Port Lake Michigan zone.
165.930 Safety Zone, Brandon Road Lock and Dam to Lake Michigan including Des Plaines River, Chicago Sanitary and Ship Canal, Chicago River, and Calumet-Saganashkee Channel, Chicago, IL.
165.931 Safety Zone, Chicago Harbor, Navy Pier Southeast, Chicago, IL.
165.933 Safety Zone, Chicago Harbor, Navy Pier East, Chicago, IL.
165.935 Safety Zone, Milwaukee Harbor, Milwaukee, WI.
165.939 Safety Zones; Annual Fireworks Events in the Captain of the Port Buffalo Zone.
165.941 Safety Zones; Annual Events in the Captain of the Port Detroit Zone.
165.943 Annual events requiring safety zones in the Captain of the Port Duluth zone.

ELEVENTH COAST GUARD DISTRICT

165.T11–504 Safety zone; Independence Day Fireworks Celebration for the City of

Richmond, Richmond Inner Harbor, Richmond, CA.
165.T11–589 Safety zone; SFOBB Demolition Safety Zone, San Francisco, CA.
165.T11–630 Safety zone; Giants Enterprises Fireworks Display, San Francisco Bay, San Francisco, CA.
165.1101 Security Zone: San Diego Bay, CA.
165.1102 Security Zone; Naval Base Point Loma; San Diego Bay, CA.
165.1103 Security Zone; Naval Mine Anti Submarine Warfare Command; San Diego Bay, San Diego, CA.
165.1104 Security Zone: San Diego Bay, CA.
165.1105 Security Zone: San Diego Bay, California.
165.1106 San Diego Bay, California—safety zone.
165.1107 San Diego Bay, California.
165.1108 Security Zones; Cruise Ships, Port of San Diego, California.
165.1110 Security Zone: Coronado Bay Bridge, San Diego, CA.
165.1120 Security Zone; Naval Amphibious Base, San Diego, CA.
165.1121 [Reserved]
165.1122 San Diego Bay, Mission Bay and their Approaches—Regulated navigation area.
165.1123 Southern California Annual Firework Events for the San Diego Captain of the Port Zone.
165.1124 Annual Firework Events on the Colorado River, between Davis Dam (Bullhead City, Arizona) and Headgate Dam (Parker, Arizona) within the San Diego Captain of Port Zone.
165.1125 Southern California Annual Firework Events for the Los Angeles Long Beach Captain of the Port zone.
165.1131 Security Zone: Wilson Cove, San Clemente Island, California.
165.1141 Safety Zone; San Clemente 3 NM Safety Zone, San Clemente Island, CA.
165.1151 Security Zones; liquefied hazardous gas tank vessels, San Pedro Bay, California.
165.1152 San Pedro Bay, California—Regulated navigation area.
165.1154 Security Zones; Cruise Ships, San Pedro Bay, California.
165.1155 Security Zone; Diablo Canyon Nuclear Power Plant, Avila Beach, California.
165.1156 Safety Zone; Offshore Marine Terminal, El Segundo, CA.
165.1157 Security Zone; Cruise Ships, Santa Barbara, California.
165.1171 Copper Canyon, Lake Havasu, Colorado River—Regulated Navigation Area.
165.1181 San Francisco Bay Region, California—regulated navigation area.
165.1182 Safety/Security Zone: San Francisco Bay, San Pablo Bay, Carquinez Strait, and Suisun Bay, CA.
165.1183 Security Zones; tankers, cruise ships, and High Value Assets, San Francisco Bay and Delta Ports, Monterey Bay and Humboldt Bay, California.
165.1184 Safety Zone; Coast Guard Use of Force Training Exercises, San Pablo Bay, CA.
165.1185 Regulated Navigation Area; San Francisco Bay, San Pablo Bay, Carquinez Strait, Suisun Bay, Sacramento River, San Joaquin River, and connecting waters in California.
165.1187 Security Zones; Golden Gate Bridge and the San Francisco-Oakland Bay Bridge, San Francisco Bay, California.
165.1190 Security Zone; San Francisco Bay, Oakland Estuary, Alameda, CA.
165.1191 Northern California and Lake Tahoe Area Annual Fireworks Events.
165.1192 Security Zones; Waters surrounding San Francisco International Airport and Oakland International Airport, San Francisco Bay, California.
165.1195 Regulated Navigation Area; Humboldt Bay Bar Channel and Humboldt Bay Entrance Channel, Humboldt Bay, California.
165.1197 Security Zones; San Francisco Bay, San Pablo Bay, Carquinez Strait, Suisun Bay, California.
165.1198 Safety zone; Military Ocean Terminal Concord Safety Zone, Suisun Bay, Military Ocean Terminal Concord, CA.
165.1199 Security Zones; Military Ocean Terminal Concord (MOTCO), Concord, California.

TWELFTH COAST GUARD DISTRICT

165.1201 Safety Zone; Old Mormon Slough, Stockton California.

THIRTEENTH COAST GUARD DISTRICT

165.T13–207 Safety Zones; Sellwood Bridge project, Willamette River; Portland, OR.
165.T13–209 Safety Zones; TriMet Bridge Project, Willamette River; Portland, OR.
165.T13–239 Safety Zone; Grain-Shipment Vessels and Grain-Shipment Assist Vessels, Columbia and Willamette Rivers.
165.T13–240 Safety Zones; Pacific Northwest Grain Handlers Association Facilities; Columbia and Willamette Rivers.
165.1301 Puget Sound and Adjacent Waters in Northwestern Washington—Regulated Navigation Area.
165.1302 Bangor Naval Submarine Base, Bangor, WA.
165.1303 Puget Sound and adjacent waters, WA—regulated navigation area.
165.1305 Commencement Bay, Tacoma, WA.
165.1307 Elliott Bay, Seattle, WA.
165.1308 Columbia River, Vancouver WA.
165.1309 Eagle Harbor, Bainbridge Island, WA.
165.1310 Strait of Juan de Fuca and adjacent coastal waters of Northwest Washington; Makah Whale Hunting—Regulated Navigation Area.

165.1311 Olympic View Resource Area, Tacoma, WA.
165.1312 Security Zone; Portland Rose Festival on Willamette River.
165.1313 Security zone regulations, tank ship protection, Puget Sound and adjacent waters, Washington
165.1314 Safety Zone; Fort Vancouver Fireworks Display, Columbia River, Vancouver, Washington.
165.1315 Safety Zones: Fireworks displays in the Captain of the Port Columbia River Zone.
165.1316 Safety Zone; Columbia River, Astoria, Oregon.
165.1317 Security and Safety Zone; Large Passenger Vessel Protection, Puget Sound and adjacent waters, Washington.
165.1318 Security and Safety Zone Regulations, Large Passenger Vessel Protection, Captain of the Port Columbia River Zone.
165.1319 Safety Zone Regulations, Seafair Blue Angels Air Show Performance, Seattle, WA.
165.1321 Security Zone; Protection of Military Cargo, Captain of the Port Zone Puget Sound, WA.
165.1322 Regulated Navigation Area: Willamette River Portland, Captain of the Port Columbia River Zone.
165.1323 Regulated Navigation Area: Willamette River Captain of the Port Columbia River Zone.
165.1324 Safety and Security Zone; Cruise Ship Protection, Elliott Bay and Pier-91, Seattle, Washington.
165.1325 Regulated Navigation Areas; Bars Along the Coasts of Oregon and Washington.
165.1326 Regulated Navigation Areas; Port of Portland Terminal 4, Willamette River, Portland, OR.
165.1327 Security Zone; escorted U.S. Navy submarines in Sector Seattle Captain of the Port Zone.
165.1328 Regulated Navigation Area; U.S. Navy submarines, Hood Canal, WA.
165.1329 Regulated Navigation Area; Thea Foss and Wheeler-Osgood Waterways EPA Superfund Cleanup Site, Commencement Bay, Tacoma, WA.
165.1330 Safety Zone; Fleet Week Maritime Festival, Pier 66, Elliott Bay, Seattle, Washington.
165.1332 Safety Zones; annual firework displays within the Captain of the Port, Puget Sound Area of Responsibility.
165.1333 Security Zones, Seattle's Seafair Fleet Week moving vessels, Puget Sound, WA.
165.1334 Security Zone; U.S. Coast Guard BSU Seattle, Pier 36, Elliot Bay, Seattle, WA.
165.1335 Security Zone; Vessels Carrying Hazardous Cargo, Sector Columbia River Captain of the Port Zone.
165.1336 Regulated Navigation Area; Pacific Sound Resources and Lockheed Shipyard Superfund Sites, Elliott Bay, Seattle, WA.
165.1337 Regulated Navigation Area, Zidell Waterfront Property, Willamette River, OR.
165.1339 Safety Zone; Coast Guard Exercise Area, Hood Canal, Washington.

FOURTEENTH COAST GUARD DISTRICT

165.14–1414 Safety Zones; Hawaiian Islands Commercial Harbors; HI.
165.1401 Apra Harbor, Guam—safety zones.
165.1402 Apra Outer Harbor, Guam—regulated navigation area.
165.1403 Security Zones; Tinian, Commonwealth of the Northern Mariana Islands.
165.1404 Apra Harbor, Guam—security zone.
165.1405 Regulated Navigation Areas and Security Zones; Designated Escorted Vessels-Philippine Sea and Apra Harbor, Guam (including Cabras Island Channel), and Tanapag Harbor, Saipan, Commonwealth of the Northern Mariana Islands (CNMI).
165.1406 Safety Zone: Pacific Missile Range Facility (PMRF), Barking Sands, Island of Kauai, Hawaii.
165.1407 Security Zones; Oahu, HI.
165.1408 Security Zones; Maui, HI.
165.1409 Security Zones; Hawaii, HI.
165.1410 Security Zones; Kauai, HI.
165.1411 Security Zone; waters surrounding U.S. Forces vessel SBX–1, HI.
165.1412 Security Zone; escorted U.S. Navy submarines in Sector Honolulu Captain of the Port Zone.
165.1413 Regulated navigation area; Southern Oahu Tsunami Evacuation; Honolulu, Hawaii.

SEVENTEENTH COAST GUARD DISTRICT

165.1701 Port Valdez, Valdez, Alaska—safety zone.
165.1702 Gastineau Channel, Juneau, Alaska—safety zone.
165.1703 Ammunition Island, Port Valdez, Alaska.
165.1704 Prince William Sound, Alaska-regulated navigation area.
165.1706 Gastineau Channel, Juneau, Alaska—Safety Zone.
165.1708 Tongass Narrows, Ketchikan, Alaska—Safety Zone.
165.1709 Security Zones: Liquefied Natural Gas Tanker Transits and Operations at Phillips Petroleum LNG Pier, Cook Inlet, AK.
165.1710 Port Valdez and Valdez Narrows, Valdez, Alaska—security zones.
165.1711 Security Zones; Waters of the Seventeenth Coast Guard District
165.1712 Safety Zones; Annual Independence Day Firework Displays, Skagway, Haines, and Wrangell, AK.

Subpart G—Protection of Naval Vessels

165.2010 Purpose.
165.2015 Definitions.
165.2020 Enforcement authority.
165.2025 Atlantic Area.
165.2030 Pacific Area.

AUTHORITY: 33 U.S.C. 1231; 46 U.S.C. Chapter 701, 3306, 3703; 50 U.S.C. 191, 195; 33 CFR 1.05–1, 6.04–1, 6.04–6, and 160.5; Pub. L. 107–295, 116 Stat. 2064; Department of Homeland Security Delegation No. 0170.1.

SOURCE: CGD 79–034, 47 FR 29660, July 8, 1982, unless otherwise noted.

EDITORIAL NOTE: Nomenclature changes to part 165 appear by USCG–2006–25556, 72 FR 36328, 36329, July 2, 2007.

Subpart A—General

§ 165.1 Purpose of part.

The purpose of this part is to:

(a) Prescribe procedures for establishing different types of limited or controlled access areas and regulated navigation areas;

(b) Prescribe general regulations for different types of limited or controlled access areas and regulated navigation areas;

(c) Prescribe specific requirements for established areas; and

(d) List specific areas and their boundaries.

§ 165.3 Definitions.

The following definitions apply to this part:

Credential means any or all of the following:

(1) Merchant mariner's document.

(2) Merchant mariner's license.

(3) STCW endorsement.

(4) Certificate of registry.

(5) Merchant mariner credential.

Merchant mariner credential or MMC means the credential issued by the Coast Guard under 46 CFR part 10. It combines the individual merchant mariner's document, license, and certificate of registry enumerated in 46 U.S.C. subtitle II part E as well as the STCW endorsement into a single credential that serves as the mariner's qualification document, certificate of identification, and certificate of service.

[USCG–2006–24371, 74 FR 11213, Mar. 16, 2009]

§ 165.5 Establishment procedures.

(a) A safety zone, security zone, or regulated navigation area may be established on the initiative of any authorized Coast Guard official.

(b) Any person may request that a safety zone, security zone, or regulated navigation area be established. Except as provided in paragraph (c) of this section, each request must be submitted in writing to either the Captain of the Port or District Commander having jurisdiction over the location as described in part 3 of this chapter, and include the following:

(1) The name of the person submitting the request;

(2) The location and boundaries of the safety zone, security zone, or regulated navigation area;

(3) The date, time, and duration that the safety zone, security zone, or regulated navigation area should be established;

(4) A description of the activities planned for the safety zone, security zone, or regulated navigation area;

(5) The nature of the restrictions or conditions desired; and

(6) The reason why the safety zone, security zone, or regulated navigation area is necessary.

(c) Safety Zones and Security Zones. If, for good cause, the request for a safety zone or security zone is made less than 5 working days before the zone is to be established, the request may be made orally, but it must be followed by a written request within 24 hours.

(Requests for safety zones, security zones, and regulated navigation areas are approved by the Office of Management and Budget under control number 1625–0020)

[CGD 79–034, 47 FR 29660, July 8, 1982, as amended by CGD 79–026, 48 FR 35408, Aug. 4, 1983; USCG–2006–25150, 71 FR 39211, July 12, 2006]

§ 165.7 Notification.

(a) The establishment of these limited access areas and regulated navigation areas is considered rulemaking. The procedures used to notify persons of the establishment of these areas vary depending upon the circumstances and emergency conditions. Notification may be made by marine broadcasts, local notice to mariners, local news

media, distribution in leaflet form, and on-scene oral notice, as well as publication in the FEDERAL REGISTER.

(b) Notification normally contains the physical boundaries of the area, the reasons for the rule, its estimated duration, and the method of obtaining authorization to enter the area, if applicable, and special navigational rules, if applicable.

(c) Notification of the termination of the rule is usually made in the same form as the notification of its establishment.

§ 165.8 Geographic coordinates.

Geographic coordinates expressed in terms of latitude or longitude, or both, are not intended for plotting on maps or charts whose referenced horizontal datum is the North American Datum of 1983 (NAD 83), unless such geographic coordinates are expressly labeled NAD 83. Geographic coordinates without the NAD 83 reference may be plotted on maps or charts referenced to NAD 83 only after application of the appropriate corrections that are published on the particular map or chart being used.

[CGD 86–082, 52 FR 33811, Sept. 8, 1987]

§ 165.9 Geographic application of limited and controlled access areas and regulated navigation areas.

(a) *General.* The geographic application of the limited and controlled access areas and regulated navigation areas in this part are determined based on the statutory authority under which each is created.

(b) *Safety zones and regulated navigation areas.* These zones and areas are created under the authority of the Ports and Waterways Safety Act, 33 U.S.C. 1221–1232. Safety zones established under 33 U.S.C. 1226 and regulated navigation areas may be established in waters subject to the jurisdiction of the United States as defined in § 2.38 of this chapter, including the territorial sea to a seaward limit of 12 nautical miles from the baseline.

(c) *Security zones.* These zones have two sources of authority—the Ports and Waterways Safety Act, 33 U.S.C. 1221–1232, and the Act of June 15, 1917, as amended by both the Magnuson Act of August 9, 1950 (''Magnuson Act''), 50 U.S.C. 191–195, and sec. 104 the Maritime Transportation Security Act of 2002 (Pub. L. 107–295, 116 Stat. 2064). Security zones established under either 33 U.S.C. 1226 or 50 U.S.C. 191 may be established in waters subject to the jurisdiction of the United States as defined in § 2.38 of this chapter, including the territorial sea to a seaward limit of 12 nautical miles from the baseline.

(d) *Naval vessel protection zones.* These zones are issued under the authority of 14 U.S.C. 91 and 633 and may be established in waters subject to the jurisdiction of the United States as defined in § 2.38 of this chapter, including the territorial sea to a seaward limit of 12 nautical miles from the baseline.

[USCG–2001–9044, 68 FR 42602, July 18, 2003, as amended by USCG–2006–25411, 71 FR 54421, Sept. 15, 2006]

Subpart B—Regulated Navigation Areas

§ 165.10 Regulated navigation areas.

A regulated navigation area is a water area within a defined boundary for which regulations for vessels navigating within the area have been established under this part.

§ 165.11 Vessel operating requirements (regulations).

Each District Commander may control vessel traffic in an area which is determined to have hazardous conditions, by issuing regulations:

(a) Specifying times of vessel entry, movement, or departure to, from, within, or through ports, harbors, or other waters;

(b) Establishing vessel size, speed, draft limitations, and operating conditions; and

(c) Restricting vessel operation, in a hazardous area or under hazardous conditions, to vessels which have particular operating characteristics or capabilities which are considered necessary for safe operation under the circumstances.

[CGD 79–026, 48 FR 35408, Aug. 4, 1983]

§ 165.13 General regulations.

(a) The master of a vessel in a regulated navigation area shall operate the

vessel in accordance with the regulations contained in Subpart F.

(b) No person may cause or authorize the operation of a vessel in a regulated navigation area contrary to the regulations in this part.

Subpart C—Safety Zones

§ 165.20 Safety zones.

A Safety Zone is a water area, shore area, or water and shore area to which, for safety or environmental purposes, access is limited to authorized persons, vehicles, or vessels. It may be stationary and described by fixed limits or it may be described as a zone around a vessel in motion.

§ 165.23 General regulations.

Unless otherwise provided in this part:

(a) No person may enter a safety zone unless authorized by the COTP or the District Commander;

(b) No person may bring or cause to be brought into a safety zone any vehicle, vessel, or object unless authorized by the COTP or the District Commander;

(c) No person may remain in a safety zone or allow any vehicle, vessel, or object to remain in a safety zone unless authorized by the COTP or the District Commander; and

(d) Each person in a safety zone who has notice of a lawful order or direction shall obey the order or direction of the COTP or District Commander issued to carry out the purposes of this subpart.

Subpart D—Security Zones

§ 165.30 Security zones.

(a) A security zone is an area of land, water, or land and water which is so designated by the Captain of the Port or District Commander for such time as is necessary to prevent damage or injury to any vessel or waterfront facility, to safeguard ports, harbors, territories, or waters of the United States or to secure the observance of the rights and obligations of the United States.

(b) The purpose of a security zone is to safeguard from destruction, loss, or injury from sabotage or other subversive acts, accidents, or other causes of a similar nature:

(1) Vessels,

(2) Harbors,

(3) Ports, and

(4) Waterfront facilities:

in the United States and all territory and water, continental or insular, that is subject to the jurisdiction of the United States.

§ 165.33 General regulations.

Unless otherwise provided in the special regulations in Subpart F of this part:

(a) No person or vessel may enter or remain in a security zone without the permission of the Captain of the Port;

(b) Each person and vessel in a security zone shall obey any direction or order of the Captain of the Port;

(c) The Captain of the Port may take possession and control of any vessel in the security zone;

(d) The Captain of the Port may remove any person, vessel, article, or thing from a security zone;

(e) No person may board, or take or place any article or thing on board, any vessel in a security zone without the permission of the Captain of the Port; and

(f) No person may take or place any article or thing upon any waterfront facility in a security zone without the permission of the Captain of the Port.

Subpart E—Restricted Waterfront Areas

§ 165.40 Restricted waterfront areas.

The Commandant, may direct the COTP to prevent access to waterfront facilities, and port and harbor areas, including vessels and harbor craft therein. This section may apply to persons who do not possess the credentials outlined in § 125.09 of this chapter when certain shipping activities are conducted that are outlined in § 125.15 of this chapter.

Subpart F—Specific Regulated Navigation Areas and Limited Access Areas

FIRST COAST GUARD DISTRICT

§ 165.T01–0174 Regulated Navigation Area; Tappan Zee Bridge Construction Project, Hudson River; South Nyack and Tarrytown, NY.

(a) *Boundaries*. The following is a regulated navigation area; all waters north of a line drawn from the following approximate positions: 41°04′17.37″ N, 073°55′13.16″ W on the western shoreline; thence to 41°04′10.97″ N, 073°55′05.05″ W; thence to 41°04′10.03″ N, 073°55′03.42″ W; thence to 41°04′07.14″ N, 073°54′54.48″ W; thence to 41°04′05.30″ N, 073°54′43.18″ W; thence to 41°04′04.72″ N, 073°52′22.52″ W; thence to 41°04′02.52″ N, 073°52′16.13″ W; thence to 41°03′59.74″ N, 073°52′10.83″ W; thence to a point on the eastern shoreline at 41°03′54.39″ N, 073°52′03.26″ W; and all waters south of a line drawn from the following approximate positions: 41°04′34.79″ N, 073°55′03.26″ W on the western shoreline; thence to 41°04′33.62″ N, 073°55′01.52″ W; thence to 41°04′26.14″ N, 073°54′53.96″ W; thence to 41°04′23.76″ N, 073°54′50.57″ W; thence to 41°04′21.58″ N, 073°54′43.77″ W; thence to 41°04′20.96″ N, 073°52′20.17″ W; thence to 41°04′20.31″ N, 073°52′15.83″ W; thence to 41°04′16.76″ N, 073°52′04.52″ W; thence to a point on the eastern shoreline at 41°04′13.84″ N, 073°51′59.44″ W.

(b) *Regulations*. (1) The general regulations contained in 33 CFR 165.10, 165.11, and 165.13 apply within the RNA.

(2) In accordance with the general regulations, entry into, anchoring, or movement within the RNA, during periods of enforcement, is prohibited unless authorized by the Captain of the Port New York (COTP) or his on-scene representative. The ''on-scene representative'' of the COTP is any Coast Guard commissioned, warrant or petty officer who has been designated by the COTP to act on the COTP's behalf. The on-scene representative may be on a Coast Guard vessel; New York State Police, or other designated craft; or may be on shore and will communicate with vessels via VHF–FM radio or loudhailer. Members of the Coast Guard Auxiliary may be present to inform vessel operators of this regulation.

(3) During periods of enforcement, entry and movement within the RNA is subject to a ''Slow-No Wake'' speed limit. Vessels may not produce a wake and may not attain speeds greater than five knots unless a higher minimum speed is necessary to maintain steerageway when traveling with a strong current. All vessels must proceed through the area with caution and operate in such a manner as to produce no wake.

(4) During periods of enforcement, all persons and vessels must comply with all orders and directions from the COTP or the COTP's on-scene representative.

(5) During periods of enforcement, upon being hailed by a Coast Guard vessel by siren, radio, flashing light or other means, the operator of the vessel must proceed as directed.

(6) Vessel operators desiring to enter or operate within the regulated area when it is closed shall contact the COTP or the on-scene representative via VHF channel 16 or 718–354–4353 (Sector New York Command Center) to obtain permission.

(7) Notwithstanding anything contained in this section, the Rules of the Road (33 CFR part 84—Subchapter E, inland navigational rules) are still in effect and must be strictly adhered to at all times.

(c) *Enforcement periods*. This regulation is enforceable 24 hours a day from 5:00 a.m. on September 15, 2013 until 11:59 p.m. on December 31, 2018.

(1) Notice of suspension of enforcement: If enforcement is suspended, the COTP will cause a notice of the suspension of enforcement by all appropriate means to be given the widest publicity among the affected segments of the public. Such means of notification may include, but are not limited to, Broadcast Notice to Mariners and Local Notice to Mariners. Such notification will include the date and time that enforcement is suspended as well as the date and time that enforcement will resume.

(2) Violations of this RNA may be reported to the COTP at 718–354–4353 or on VHF-Channel 16.

EFFECTIVE DATE NOTE: By USCG–2013–0705, 78 FR 59234, Sept. 26, 2013, temporary § 165.T01–0174 was added, effective Sept. 26, 2013, until 11:59 p.m. on Dec. 31, 2018.

§ 165.T01–0329 Regulated Navigation Area; Maine Kennebec Bridge Construction and Removal, Kennebec River, Richmond, ME.

(a) *Location*. The following area is a Regulated Navigation Area (RNA): All navigable waters, surface to bottom, on the Kennebec River within a 300 yard radius of position 44°05'27'' N, 069°46'57'' W in the vicinity of the Maine Kennebec River Bridge between Richmond, ME and Dresden, ME.

(b) *Regulations*. (1) The general regulations contained in 33 CFR 165.11 and 165.13 apply within the RNA.

(2) In accordance with the general regulations, entry into or movement within this zone, during periods of enforcement, is prohibited unless authorized by the COTP Sector Northern New England.

(3) Persons and vessels may request permission to enter the RNA during periods of enforcement by contacting the COTP or the COTP's on-scene representative on VHF–16 or via phone at 207–767–0303.

(4) During periods of enforcement, a speed limit of six (6) knots will be in effect within the regulated area. All vessels must proceed through the area with caution and operate in such a manner as to produce no wake.

(5) Vessels must comply with all directions given to them by the COTP or the COTP's on-scene representative. The ''on-scene representative'' of the COTP is any Coast Guard commissioned, warrant or petty officer who has been designated by the COTP to act on the COTP's behalf. The on-scene representative may be on a Coast Guard vessel; Maine State Police, Maine Marine Patrol or other designated craft; or may be on shore and communicating with vessels via VHF–FM radio or loudhailer. Members of the Coast Guard Auxiliary may be present to inform vessel operators of this regulation.

(6) Upon being hailed by a U.S. Coast Guard vessel by siren, radio, flashing light or other means, the operator of the vessel must proceed as directed.

(7) All other relevant regulations, including but not limited to the Rules of the Road (33 CFR part 84—Subchapter E, Inland Navigational Rules) remain in effect within the regulated area and must be strictly followed at all times.

(c) *Enforcement period*. This regulation is enforceable 24 hours a day from 5:00 a.m. on September 1, 2013 until 11:59 p.m. on December 31, 2016.

(1) Prior to commencing or suspending enforcement of this regulation, the COTP will give notice by appropriate means to inform the affected segments of the public, to include dates and times. Such means of notification will include constructive notice by publication in the FEDERAL REGISTER, actual notice, as well as Broadcast Notice to Mariners and Local Notice to Mariners.

(2) Violations of this RNA may be reported to the COTP at 207–767–0303 or on VHF-Channel 16.

EFFECTIVE DATE NOTE: By USCG–2013–0329, 78 FR 53671, Aug. 30, 2013, temporary § 165.T01–0329 was added, effective from Sept. 1, 2013, through Dec. 31, 2016.

§ 165.T01–0471 Safety Zone; Belt Parkway Bridge Construction, Gerritsen Inlet, Brooklyn, NY.

(a) *Location*. The following area is a safety zone: All navigable waters of Gerritsen Inlet: Southeast of a line from 40°35′09.46″ N, 073°54′53.92″ W to 40°35′10.0″ N, 073°54′44.5″ W and Northwest of a line from 40°35′04.88″ N, 073°54′45.43″ W to 40°35′10.34″ N, 073°54′35.71″ W (NAD 83).

(b) *Definitions*. The following definitions apply to this section:

(1) *Designated representative*. A ''designated representative'' is any Coast Guard commissioned, warrant or petty officer of the U.S. Coast Guard who has been designated by the Captain of the Port New York (COTP), to act on his or her behalf. The designated representative may be on an official patrol vessel or may be on shore and will communicate with vessels via VHF–FM radio or loudhailer. In addition, members of the Coast Guard Auxiliary may be present to inform vessel operators of this regulation.

(2) *Official patrol vessels*. Official patrol vessels may consist of any Coast Guard, Coast Guard Auxiliary, state, or

local law enforcement vessels assigned or approved by the COTP.

(c) *Enforcement periods.* (1) This regulation is enforceable 24 hours a day from April 30, 2014 through September 30, 2017.

(2) Prior to commencing or suspending enforcement of this regulation, the COTP and designated on-scene patrol personnel will notify the public whenever the regulation is being enforced and whenever enforcement is lifted, to include dates and times. The means of notification will include, but are not limited to, Broadcast Notice to Mariners and Local Notice to Mariners, Marine Safety Information Bulletins, or other appropriate means.

(d) *Regulations.* (1) The general regulations contained in 33 CFR 165.23, as well as the following regulations, apply.

(2) During periods of enforcement, all persons and vessels must comply with all orders and directions from the COTP or a COTP's designated representative.

(3) During periods of enforcement, upon being hailed by a U.S. Coast Guard vessel by siren, radio, flashing light, or other means, the operator of the vessel must proceed as directed.

EFFECTIVE DATE NOTE: By USCG–2013–0471, 79 FR 26851, May 12, 2014, temporary § 165.T01–0471 was added, effective from May 12, 2014 until Sept. 30, 2017.

§ 165.T01–0623 Regulated Navigation Area: Thames River New London, CT.

(a) *Location.* The following area is a regulated navigation area: All navigable waters of the Thames River adjacent to Fort Trumbull State Park in New London, CT, from surface to bottom bounded to the north by a line connecting the following points: Point ''1'', 41°20′40″ N, 072°05′32″ W east to point ''2'', 41°20′40″ N, 072°05′15″ W then southeast to point ''3'', 41°20′31.8″ N, 072°05′03″ W then south to point ''4'', 41°20′28″ N, 072°05′03″ W then east to point ''5'', 41°20′30″ N, 072°04′48″ W; bounded to the east by following the shoreline south from point ''5'' to point ''6'', 41°20′19″ N, 072°04′46″ W; bounded to the south by a line connecting the following points: point ''6'' west to point ''7'', 41°20′17″ N, 072°05′13″ W then north to point ''8'' 41°20′27.2″ N, 072°05′15″ W then northwest to point ''9'' 41°20′29.5″ N, 072°05′17″ W then west to point ''10'' 41°20′29.5″ N, 072°05′30″ W then northwest to point ''11'' 41°20′31″ N, 072°05′34″ W; bounded to the west by following the shoreline north from point ''11'' back to the start, point ''1''.

(b) *Regulations.* (1) The general regulations contained in 33 CFR 165.10, 165.11, and 165.13 apply.

(2) In accordance with the general regulations, entry into, anchoring, or movement within this zone, during periods of enforcement, is prohibited unless authorized by the Captain of the Port Long Island Sound (COTP) or the COTP's designated representative.

(3) During periods of enforcement, a ''Slow-No-Wake'' speed limit will be in effect. Vessels may not produce more than a minimum wake and may not attain speeds greater than six knots unless a higher minimum speed is necessary to maintain steerageway when traveling with a strong current. In no case may the wake produced by the vessel be such that it would create a danger of injury to persons, or damage to vessels or structures.

(4) During periods of enforcement, SECURITE calls must be made by all persons and vessels conducting crane or dive operations.

(5) During periods of enforcement, all persons and vessels must comply with all orders and directions from the COTP or the COTP's designated representative.

(6) During periods of enforcement, upon being hailed by a U.S. Coast Guard vessel by siren, radio, flashing light or other means, the operator of the vessel must proceed as directed.

(7) Persons and vessels may request permission to enter the zone during periods of enforcement on VHF–16 or via phone at 203–468–4401.

(8) Notwithstanding anything contained in this rule, the Rules of the Road (33 CFR Part 84—Subchapter E, inland navigational rules) are still in effect and must be strictly adhered to at all times.

(c) *Effective period.* This rule is effective until October 31, 2014.

(d) *Enforcement period.* (1) Except when suspended in accordance with paragraph (d)(2) of this section, this

regulated navigation area is in force 24 hours a day until October 31, 2014.

(2) Notice of suspension of enforcement: The COTP may suspend enforcement of the regulated navigation area. If enforcement is suspended, the COTP will cause notice of the suspension of enforcement to be made by all appropriate means to the affected segments of the public. Such means of notification may include, but are not limited to, Broadcast Notice to Mariners and Local Notice to Mariners. Such notifications will include the date and time that enforcement is suspended as well as the date and time that enforcement will resume.

(3) Violations of this regulated navigation area must be reported to the COTP, at 203–468–4401 or on VHFs–Channel 16. Persons in violation of this regulated navigation area may be subject to civil or criminal penalties.

EFFECTIVE DATE NOTE: By USCG–2012–0623, 77 FR 67568, Nov. 13, 2012, temporary § 165.T01–0623 was added, effective Dec. 13, 2012 until Oct. 31, 2014.

§ 165.T01–0824 Regulated Navigation Area; Housatonic River Bridge Replacement Operations; Stratford, CT.

(a) *Location*. The following area is a regulated navigation area (RNA): All navigable waters of the Housatonic River between Stratford and Milford, CT, from bank to bank, surface to bottom; bounded to the north by the Metro North Railroad (RR) Bridge marked by a line connecting the following points: Point ''A'', 41°12′17.19″ N, 073°06′40.29″ W western edge of the RR bridge in Stratford, CT, east to point ''B'', 41°12′20.13″ N, 073°6′29.05″ W eastern edge of the RR bridge in Milford CT; bounded to the south by a line connecting the following points: Point ''C'' 41°12′14.36″ N, 073°06′41.06″ W western edge of construction trestle in Stratford, CT, east to point ''D'' 41°12′15.86″ N, 073°06′27.57″ W eastern bank of Housatonic River, Milford, CT. All coordinates are North American Datum 1983.

(b) *Regulations*. (1) The general regulations contained in 33 CFR 165.10, 165.11, and 165.13 apply.

(2) In accordance with the general regulations, entry into, anchoring, or movement within the RNA, during periods of enforcement, is prohibited unless authorized by the Captain of the Port Long Island Sound (COTP) or the COTP's designated representative.

(3) During periods of enforcement, entry and movement within the RNA is subject to a ''Slow-No Wake'' speed limit. Vessels may not produce more than a minimum wake and may not attain speeds greater than six knots unless a higher minimum speed is necessary to maintain steerageway when traveling with a strong current. In no case may the wake produced by the vessel be such that it creates a danger of injury to persons, or damage to vessels or structures of any kind.

(4) During periods of enforcement, all persons and vessels must comply with all orders and directions from the COTP or the COTP's designated representative.

(5) During periods of enforcement, upon being hailed by a Coast Guard vessel by siren, radio, flashing light or other means, the operator of the vessel must proceed as directed.

(6) Persons and vessels may request permission to enter the RNA during periods of closure on VHF–16 or via phone at 203–468–4401.

(7) Notwithstanding anything contained in this rule, the Rules of the Road (33 CFR part 84—Subchapter E, inland navigational rules) are still in effect and must be strictly adhered to at all times.

(c) *Effective period*. This rule is effective from January 7, 2013 through November 30, 2017.

(d) *Enforcement period*. Except when suspended in accordance with paragraph (e) of this section, this RNA is enforceable 24 hours a day during the effective period.

(e) *Suspension of enforcement*. The COTP may suspend enforcement of the RNA. If enforcement is suspended, the COTP will cause a notice of the suspension of enforcement by all appropriate means to promote the widest publicity among the affected segments of the public. Such means of notification may include, but are not limited to, Broadcast Notice to Mariners and Local Notice to Mariners. Such notifications will include the date and time that enforcement is suspended as well as the

date and time that enforcement will resume.

(f) *Waterway closure.* The COTP may temporarily suspend all traffic through the RNA for any situation that would pose imminent hazard to life on the navigable waters. In the event of a complete waterway closure, the COTP will make advance notice of the closure by all means available to promote the widest public distribution including, but not limited to, Broadcast Notice to Mariners and Local Notice to Mariners. Such notification will include the date and time of the closure as well as the date and time that normal vessel traffic can resume.

(g) Violations of this RNA may be reported to the COTP, at 203–468–4401 or on VHF-Channel 16. Persons in violation of this RNA may be subject to civil or criminal penalties.

EFFECTIVE DATE NOTE: By USCG–2012–0824, 78 FR 1148, Jan. 8, 2013, temporary § 165.T01–0824 was added, effective Jan. 7, 2013 through Nov. 30, 2017.

§ 165.T01–0876 Regulated Navigation Area—Weymouth Fore River, Fore River Bridge Construction, Weymouth and Quincy, MA.

(a) *Location.* The following is a regulated navigation area: all U.S. navigable waters surrounding the Weymouth Fore River bridge (Mile 3.5), between Weymouth and Quincy, MA; from surface to bottom, within the following points (NAD 83): from a line extending from 42°14′46.392″ N, 070°58′2.964″ W, thence along a line 120°T to 42°14′44.376″ N, 070°57′52.992″ W, thence south along the shoreline to 42°14′35.052″ N, 070°57′59.364″ W, thence along a line 291°T to 42°14′38.58″ N, 070°58′15.348″ W, thence north along the shoreline to the first point.

(b) *Effective and enforcement periods.* This rule is effective from October 28, 2013 until December 31, 2017. This RNA will be enforced intermittently, depending on risks posed by the ongoing construction project. Periods of enforcement will be published in the FEDERAL REGISTER via a Notice of Enforcement and may be publicized via Local Notice to Mariners or Broadcast Notice to Mariners.

(c) *Regulations.* (1) The general regulations contained in 33 CFR 165.10, 165.11, and 165.13 apply.

(2) In accordance with the general regulations, entry into, anchoring, or movement within the RNA, during periods of enforcement, is prohibited unless authorized by the First District Commander, the Captain of the Port Boston (COTP), or the COTP's designated representative.

(3) During periods of enforcement, entry and movement within the RNA is subject to a ''Slow-No Wake'' speed limit. Vessels within the RNA may not produce more than a minimum wake and may not attain speeds greater than three knots unless a higher minimum speed is necessary to maintain steerageway when traveling with a strong current. In no case may the wake produced by a vessel within the RNA be such that it creates a danger of injury to persons or damage to vessels or structures of any kind.

(4) During periods of enforcement, all persons and vessels permitted to operate within the RNA must comply with all orders and directions from the First District Commander, the COTP, or the COTP's designated representative.

(5) During periods of enforcement, all persons and vessels permitted to operate within the RNA must proceed as directed when hailed by a Coast Guard vessel by siren, radio, flashing light or other means.

(6) Vessel operators desiring to enter or operate within the RNA during an enforcement period shall contact the COTP or the designated on-scene representative via VHF channel 16 or 617–223–3201 (Sector Boston command Center) to obtain permission.

(7) Notwithstanding anything contained in this rule, the Rules of the Road (33 CFR part 84—Subchapter E, inland navigational rules) are still in effect and must be strictly adhered to at all times.

EFFECTIVE DATE NOTE: By USCG–2012–0876, 78 FR 59239, Sept. 26, 2013, temporary § 165.T01–0876 was added, effective from Oct. 28, 2013 until Dec. 31, 2017.

§ 165.T01–1130 Regulated Navigation Area; S99 Alford Street Bridge rehabilitation project, Mystic River, MA.

(a) *Location.* The following area is a Regulated Navigation Area (RNA): All navigable waters of the Mystic River between Boston and Chelsea, MA, from surface to bottom, within 100 yards of any point on the S99 Alford Street Bridge.

(b) *Regulations.* (1) The general regulations contained in 33 CFR 165.10, 165.11, and 165.13 apply in addition to those provisions outlined below.

(2) In accordance with the general regulations, entry into or movement within this zone, during periods of enforcement, is prohibited unless authorized by Captain of the Port (COTP) Sector Boston.

(3) All persons and vessels must comply with all directions given to them by the COTP Sector Boston or the on-scene representative. The ''on-scene representative'' of the COTP is any Coast Guard commissioned, warrant or petty officer who has been designated by the COTP to act on the COTP's behalf. The on-scene representative may be on a Coast Guard vessel or other designated craft, or may be on shore and will communicate with vessels via VHF–FM radio or loudhailer. Members of the Coast Guard Auxiliary may be present to inform vessel operators of this regulation.

(4) Upon being hailed by a U.S. Coast Guard vessel by siren, radio, flashing light or other means, the operator of the vessel must proceed as directed.

(5) Notwithstanding any other provisions in this regulation, the movement of official, emergency vessels within the regulated area is permitted provided that the contractor is notified in order to remove potential hazards or obstructions.

(6) All other relevant regulations, including but not limited to the Rules of the Road (33 CFR subchapter E, Inland Navigational Rules) remain in effect within the regulated area and must be strictly followed at all times.

(c) *Enforcement period.* (1) This regulated navigation area is enforceable 24 hours a day from 11:59 p.m. on November 30, 2012 through December 31, 2014.

(2) The COTP Sector Boston will cause notice of enforcement, suspension of enforcement, or closure of the waterway to be made by all appropriate means to achieve the widest distribution among the affected segments of the public. Such means of notification may include but are not limited to Broadcast Notice to Mariners, Local Notice to Mariners and Marine Safety Information Bulletins. Such notification will include the date and time that enforcement is suspended as well as the date and time that enforcement will resume.

(3) Report violations of this regulated navigation area to the COTP Sector Boston, at (617) 223–5757 or on VHF-Channel 16.

EFFECTIVE DATE NOTE: By USCG–2011–1125, 77 FR 73919, Dec. 12, 2012, temporary § 165.T01–1130 was added, effective from 11:59 p.m. on Nov. 30, 2012 through Dec. 31, 2014.

§ 165.100 Regulated Navigation Area: Navigable waters within the First Coast Guard District.

(a) *Regulated navigation area.* All navigable waters of the United States, as that term is used in 33 CFR 2.36, within the geographic boundaries of the First Coast Guard District, as defined in 33 CFR 3.05–1(b).

(b) *Definitions.* Terms used in this section have the same meaning as those found in 33 CFR 157.03. Single-hull identifies any tank barge that is not a double-hull tank barge.

(c) *Applicability.* This section applies to primary towing vessels engaged in towing tank barges carrying petroleum oil in bulk as cargo in the regulated navigation area, or as authorized by the District Commander.

(d) *Regulations*—(1) *Positive control for barges.* (i) Except as provided in paragraph (d)(1)(iii) and paragraph 5 of this section, each single hull tank barge, unless being towed by a primary towing vessel with twin-screw propulsion and with a separate system for power to each screw, must be accompanied by an escort tug of sufficient capability to promptly push or tow the tank barge away from danger of grounding or collision in the event of—

(A) A propulsion failure;

(B) A parted towing line;

(C) A loss of tow;

(D) A fire;

(E) Grounding;

(F) A loss of steering; or

(G) Any other time a vessel may be operating in a Hazardous Vessel Operating Condition as defined in §161.2 of this Chapter.

(ii) Double-hull tank barges are exempt from paragraph (d)(1)(i) of this section.

(iii) The cognizant Captain of the Port (COTP), upon written application, may authorize an exemption from the requirements of paragraph (d)(1)(i) of this section for—

(A) Any tank barge with a capacity of less than 25,000 barrels, operating in an area with limited depth or width such as a creek or small river; or

(B) Any tank barge operating on any waters within the COTP Zone, if the operator demonstrates to the satisfaction of the COTP that the barge employs an equivalent level of safety to that provided by the positive control provisions of this section. Each request for an exemption under this paragraph must be submitted in writing to the cognizant COTP no later than 7 days before the intended transit.

(iv) The operator of a towing vessel engaged in towing any tank barge must immediately call for an escort or assist tug to render assistance in the event of any of the occurrences identified in paragraph (d)(1)(i) of this section.

(2) *Enhanced communications*. Each vessel engaged in towing a tank barge must communicate by radio on marine band or Very High Frequency (VHF) channel 13 or 16, and issue security calls on marine band or VHF channel 13 or 16, upon approach to the following places:

(i) Execution Rocks Light (USCG Light List No. [LLNR] 21440).

(ii) Matinecock Point Shoal Buoy (LLNR 21420).

(iii) 32A Buoy (LLNR 21380).

(iv) Cable and Anchor Reef Buoy (LLNR 21330).

(v) Stratford Middle Ground Light (LLNR 21260).

(vi) Old Field Point Light (LLNR 21275).

(vii) Approach to Stratford Point from the south (NOAA Chart 12370).

(viii) Falkner Island Light (LLNR 21170).

(ix) TE Buoy (LLNR 21160).

(x) CF Buoy (LLNR 21140).

(xi) PI Buoy (LLNR 21080).

(xii) Race Rock Light (LLNR 19815).

(xiii) Valiant Rock Buoy (LLNR 19825).

(xiv) Approach to Point Judith in vicinity of Block Island ferry route.

(xv) Buzzards Bay Entrance Light (LLNR 630).

(xvi) Buzzards Bay Midchannel Lighted Buoy (LLNR 16055)

(xvii) Cleveland East Ledge Light (LLNR 16085).

(xviii) Hog Island buoys 1 (LLNR 16130) and 2 (LLNR 16135).

(xix) Approach to the Bourne Bridge.

(xx) Approach to the Sagamore Bridge.

(xxi) Approach to the eastern entrance of Cape Cod Canal.

(3) *Voyage planning*. (i) Each owner or operator of a towing vessel employed to tow a tank barge shall prepare a written voyage plan for each transit of the tank barge.

(ii) The watch officer is authorized to make modifications to the plan and validate it as necessary.

(iii) Except as provided in paragraph (d)(3)(iv) of this section, each voyage plan must contain:

(A) A description of the type, volume, and grade of cargo.

(B) Applicable information from nautical charts and publications, including Coast Pilot, Coast Guard Light List, and Coast Guard Local Notice to Mariners, for the destination(s).

(C) Current and forecasted weather, including visibility, wind, and sea state for the destination(s).

(D) Data on tides and tidal currents for the destination(s).

(E) Forward and after drafts of the tank barge, and under-keel and vertical clearances for each port and berthing area.

(F) Pre-departure checklists.

(G) Calculated speed and estimated times of arrival at proposed waypoints.

(H) Communication contacts at Vessel Traffic Service (VTS) (if applicable), bridges, and facilities, and port-specific requirements for VHF radio.

(I) The master's standing orders detailing closest points of approach, special conditions, and critical maneuvers.

(iv) Each owner or operator of a tank barge on an intra-port transit of not

more than four hours may prepare a voyage plan that contains:

(A) The information described in paragraphs (d)(3)(iii)(D) and (E) of this section.

(B) Current weather conditions including visibility, wind, and sea state. This information may be entered in either the voyage plan or towing vessel's log book.

(C) The channels of VHF radio to monitor.

(D) Other considerations such as availability of pilot, assist tug, berth, and line-handlers, depth of berth at mean low water, danger areas, and security calls.

(4) *Navigation restriction areas.* Unless authorized by the cognizant COTP, no tank barge may operate in—

(i) The waters of Cape Cod Bay south of latitude 42°5′ North and east of longitude 70°25′ West; or

(ii) The waters of Fishers Island Sound east of longitude 72°2′ West, and west of longitude 71°55′ West.

(5) *Special Buzzards Bay regulations.* (i) For the purposes of this section, ''Buzzards Bay'' is the body of water east and north of a line drawn from the southern tangent of Sakonnet Point, Rhode Island, in approximate position latitude 41°–27.2′ North, longitude 70°–11.7′ West, to the Buzzards Bay Entrance Light in approximate position latitude 41°–23.5′ North, longitude 71°–02.0′ West, and then to the southwestern tangent of Cuttyhunk Island, Massachusetts, at approximate position latitude 41°–24.6′ North, longitude 70°–57.0′ West, and including all of the Cape Cod Canal to its eastern entrance, except that the area of New Bedford harbor within the confines (north) of the hurricane barrier, and the passages through the Elizabeth Islands, is not considered to be ''Buzzards Bay''.

(ii) *Additional positive control for barges.* Except as provided in paragraph (d)(1)(iii) of this section, each single hull tank barge transiting Buzzards Bay and carrying 5,000 or more barrels of oil or other hazardous material must, in addition to its primary tug, be accompanied by an escort tug of sufficient capability to promptly push or tow the tank barge away from danger of grounding or collision in the event of—

(A) A propulsion failure;

(B) A parted tow line;

(C) A loss of tow;

(D) A fire;

(E) Grounding;

(F) A loss of steering; or

(G) Any other time a vessel may be operating in a Hazardous Vessel Operating Condition as defined in §161.2 of this subchapter.

(iii) *Federal pilotage.* Each single hull tank barge transiting Buzzards Bay and carrying 5,000 or more barrels of oil or other hazardous material must be under the direction and control of a pilot, who is not a member of the crew, operating under a valid, appropriately endorsed, Federal first class pilot's license issued by the Coast Guard (''federally licensed pilot''). Pilots are required to embark, direct, and control from the primary tug during transits of Buzzards Bay.

(iv) In addition to the vessels denoted in §161.16 of this chapter, requirements set forth in subpart B of 33 CFR part 161 also apply to any vessel transiting VMRS Buzzards Bay required to carry a bridge-to-bridge radiotelephone by part 26 of this chapter.

(A) A VMRS Buzzards Bay user must:

(*1*) Not enter or get underway in the area without first notifying the VMRS Center;

(*2*) Not enter VMRS Buzzards Bay if a Hazardous Vessel Operating Condition or circumstance per §161.2 of this Subchapter exists;

(*3*) If towing astern, do so with as short a hawser as safety and good seamanship permits;

(*4*) Not meet, cross, or overtake any other VMRS user in the area without first notifying the VMRS center;

(*5*) Before meeting, crossing, or overtaking any other VMRS user in the area, communicate on the designated vessel bridge-to-bridge radiotelephone frequency, intended navigation movements, and any other information necessary in order to make safe passing arrangements. This requirement does not relieve a vessel of any duty prescribed by the International Regulations for Prevention of Collisions at Sea, 1972 (33 U.S.C. 1602(c)) or the Inland Navigation Rules (33 U.S.C. 2005).

(B) [Reserved]

(e) In addition to the authority for this part 165, this section is also authorized under authority of section 311, Pub. L. 105–383.

[CGD1–98–151, 63 FR 71770, Dec. 30, 1998, as amended by CGD01–98–151, 64 FR 12749, Mar. 15, 1999; USCG–1999–5832, 64 FR 34715, June 29, 1999; CGD01–98–151, 65 FR 35838, June 6, 2000; CGD01–04–133, 72 FR 50058, Aug. 30, 2007; 72 FR 70780, Dec. 13, 2007; USCG–2008–0179, 73 FR 35016, June 19, 2008]

§ 165.101 Kittery, Maine—regulated navigation area.

(a) The following is a regulated navigation area—Waters within the boundaries of a line beginning at 43°04′50″ N, 70°44′52″ W; then to 43°04′52″ N, 70°44′53″ W; then to 43°04′59″ N, 70°44′46″ W; then to 43°05′05″ N, 70°44′32″ W; then to 43°05′03″ N, 70°44′30″ W; then to the beginning point.

(b) *Regulations.* No vessel may operate in this area at a speed in excess of five miles per hour.

§ 165.102 Security Zone: Walkers Point, Kennebunkport ME.

(a) *Location.* The following area is a security zone: From point of land located on Cape Arundel at latitude 43°20.4′ North, Iongitude 070°28.0′ West; thence to a point approximately 500 yards southwest of Walkers Point located at latitude 43°20.2′ North, longitude 070°27.9′ West; thence to a point located approximately 500 yards south of Walkers Point at latitude 43°20.1′ North, longitude 070°27.6′ West; thence to a point located approximately southeast of Walkers Point at latitude 43°20.4′ North, longitude 070°27.2′ West; thence to an unnamed point of land located at 43°20.9′ North, longitude 070°27.1′ West; thence along the shoreline of Walkers Point to the beginning point. The aforementioned offshore positions are approximated by white buoys marked in orange indicating an exclusionary area.

(b) *Regulations.* (1) In accordance with the general regulations in § 165.33 of this part, entry into this zone is prohibited unless authorized by the Captain of the Port, Portland, Maine. Section 165.33 also contained other general requirements.

(2) No person may swim upon or below the surface of the water within the boundaries of this security zone.

[CGDI 89–008, 54 FR 13883, Apr. 6, 1989]

§ 165.103 Safety and Security Zones; LPG Vessel Transits in Portland, Maine, Captain of the Port Zone, Portsmouth Harbor, Portsmouth, New Hampshire.

(a) *Location.* The following areas are safety and security zones: (1) Except as provided in paragraph (a) (2) of this section, all navigable waters of the Portland, Maine, Captain of the Port zone, as defined in 33 CFR 3.05–15, one mile ahead, one half mile astern, and 1000-yards on either side of any Liquefied Petroleum Gas vessel.

(2) All waters of the Piscataqua River within a 500-yard radius of any Liquefied Petroleum Gas (LPG) vessel while it is moored at the LPG receiving facility on the Piscataqua River, Newington, New Hampshire.

(b) *Definitions.* For purposes of this section, navigable waters of the United States includes all waters of the territorial sea as described in Presidential Proclamation No. 5928 of December 27, 1988. Presidential Proclamation No. 5928 of December 27, 1988 declared that the territorial sea of the United States extends to 12 nautical miles from the baseline of the United States.

(c) *Regulations.* (1) In accordance with the general regulations in §§ 165.23 and 165.33 of this part, entry into or movement within these zones is prohibited unless previously authorized by the Captain of the Port (COTP), Portland, Maine.

(2) All persons and vessels shall comply with the instructions of the COTP or the designated on-scene U.S. Coast Guard patrol personnel. On-scene Coast Guard patrol personnel include commissioned, warrant, and petty officers of the Coast Guard on board Coast Guard, Coast Guard Auxiliary, and local, state, and federal law enforcement vessels. Emergency response vessels are authorized to move within the zone, but must abide by restrictions imposed by the Captain of the Port.

(3) No person may swim upon or below the surface of the water within the boundaries of the safety and security zones unless previously authorized

by the Captain of the Port, Portland, Maine or his authorized patrol representative.

(d) The Captain of the Port will notify the maritime community and local agencies of periods during which these safety and security zones will be in effect by providing notice of arrivals and departures of LPG vessels via the telephone and/or Marine Safety Information Radio Broadcasts.

[CGD01–02–045, 67 FR 56487, Sept. 4, 2002]

§ 165.104 Safety Zone: Vessel Launches, Bath Iron Works, Kennebec River, Bath, Maine.

(a) *Location*. The following is a safety zone: all waters of the Kennebec River within a 150-yard radius of the Bath Iron Works dry dock while it is being moved to and from its moored position at the Bath Iron Works Facility in Bath, Maine to a deployed position in the Kennebec River, and while launching or recovering vessels.

(b) *Regulations*. (1) In accordance with the general regulations in § 165.23 of this part, entry into or movement within this zone is prohibited unless authorized by the Captain of the Port, Portland, Maine.

(2) All vessel operators shall comply with the instructions of the COTP or the designated on-scene U. S. Coast Guard patrol personnel. On-scene Coast Guard patrol personnel include commissioned, warrant and petty officers of the Coast Guard on board Coast Guard, Coast Guard Auxiliary, local, state and federal law enforcement vessels.

(c) *Notifications*. The Captain of the Port will notify the maritime community of periods during which this safety zone will be in effect by providing advance notice via Marine Safety Information Radio Broadcasts.

[CGD01–01–155, 67 FR 49582, July 31, 2002]

§ 165.105 Security Zones; Passenger Vessels, Portland, Maine, Captain of the Port Zone.

(a) *Definition*. ''Passenger vessel'' as used in this section means a passenger vessel over 100 gross tons authorized to carry more than 500 passengers for hire making voyages, any part of which is on the high seas, and for which passengers are embarked, disembarked or pay a port call, in the Portland, Maine, Captain of the Port zone as delineated in 33 CFR 3.05–15.

(b) *Location*. The following areas are security zones:

(1) All navigable waters within the Portland, Maine, Captain of the Port Zone, extending from the surface to the sea floor, within a 100-yard radius of any passenger vessel that is anchored, moored, or in the process of mooring.

(2) All navigable waters, within the Portland, Maine, Captain of the Port Zone, extending from the surface to the sea floor, extending 200 yards ahead, and 100 yards aside and astern of any passenger vessel that is underway.

(c) *Regulations*. (1) In accordance with the general regulations in § 165.33 of this part, entry into or movement within these zones is prohibited unless previously authorized by the Coast Guard Captain of the Port, Portland, Maine (COTP) or his designated representative.

(2) All persons and vessels must comply with the instructions of the COTP or the designated on-scene Coast Guard patrol personnel. On-scene Coast Guard patrol personnel include commissioned, warrant and petty officers of the Coast Guard on board Coast Guard, Coast Guard Auxiliary, and local, state and federal law enforcement vessels. Emergency response vessels are authorized to move within the zone, but must abide by restrictions imposed by the COTP or his designated representative.

(3) No person may swim upon or below the surface of the water within the boundaries of these security zones unless previously authorized by the COTP or his designated representative.

(d) *Enforcement*. The Captain of the Port will enforce these zones and may enlist the aid and cooperation of any Federal, state, county, municipal, or private agency to assist in the enforcement of the regulation.

[CGD01–03–001, 68 FR 22305, Apr. 28, 2003]

§ 165.106 Security Zone: Seabrook Nuclear Power Plant, Seabrook, New Hampshire.

(a) *Location*. The following area is a security zone: All land and waters within 250 yards of the waterside property boundary of Seabrook Nuclear

Power Plant identified as follows: beginning at position 42°53′58″ N, 070°51′06″ W then running along the property boundaries of Seabrook Nuclear Power Plant to position 42°53′46″ N, 070°51′06″ W. All coordinates reference 1983 North American Datum (NAD 83).

(b) *Regulations*. (1) In accordance with the general regulations in § 165.33 of this part, entry into or movement within this zone is prohibited unless authorized by the Captain of the Port, Portland, Maine (COTP).

(2) All persons and vessels shall comply with the instructions of the Coast Guard Captain of the Port, Portland, Maine or designated on-scene U.S. Coast Guard patrol personnel. On-scene Coast Guard patrol personnel include commissioned, warrant, and petty officers of the Coast Guard on board Coast Guard, Coast Guard Auxiliary, local, state and federal law enforcement vessels.

(3) No person may swim upon or below the surface of the water within the boundaries of this security zone.

[CGD01–02–092, 67 FR 64815, Oct. 22, 2002]

§ 165.110 Safety and Security Zone; Liquefied Natural Gas Carrier Transits and Anchorage Operations, Boston, Massachusetts.

(a) *Definitions*. As used in this section—

Authorized representative means a Coast Guard commissioned, warrant, or petty officer or a Federal, State, or local law enforcement officer designated by or assisting the Captain of the Port (COTP) Boston.

Deepwater port means any facility or structure meeting the definition of deepwater port in 33 CFR 148.5.

Support vessel means any vessel meeting the definition of support vessel in 33 CFR 148.5.

(b) *Location*. The following areas are safety and security zones:

(1) *Vessels underway*. All navigable waters of the United States within the Captain of the Port (COTP) Boston zone, as defined in 33 CFR 3.05–10, two miles ahead and one mile astern, and 500 yards on each side of any liquefied natural gas carrier (LNGC) vessel while underway.

(2) *Vessels anchored in the Broad Sound*. All waters within a 500-yard radius of any anchored LNGC vessel located in the waters of Broad Sound bounded by a line starting at position 42 deg. 25′ N, 070 deg. 58′ W; then running southeast to position 42 deg. 22′ N, 070 deg. 56′ W; then running east to position 42 deg. 22′ N, 070 deg. 50′ W; then running north to position 42 deg. 25′ N, 070 deg. 50′ W; then running west back to the starting point (NAD 83).

(3) *Vessels moored at the Distrigas LNG facility*. All waters within a 400-yard radius of any LNGC vessel moored at the Distrigas LNG facility in Everett, MA.

(4) *Vessels calling on a deepwater port*. All waters within a 500-meter radius of any LNGC engaged in regasification or transfer, or otherwise moored, anchored, or affixed to a deepwater port listed in 33 CFR 150.490 and falling within the waters of the Boston COTP Zone, as defined in 33 CFR 3.05–10.

(c) *Regulations*. (1) In accordance with the general regulations in Sec. 165.23 and Sec. 165.33 of this part, entry into or movement within these zones is prohibited unless authorized by the Captain of the Port Boston, or his/her authorized representative.

(2) No person or vessel may enter the waters within the boundaries of the safety and security zones described in paragraph (b) of this section unless previously authorized by the COTP Boston, or his/her authorized representative. However, LNGCs and support vessels, as defined in 33 CFR 148.5, operating in the vicinity of NEGDWP are authorized to enter and move within such zones in the normal course of their operations following the requirements set forth in 33 CFR 150.340 and 150.345, respectively.

(3) All vessels operating within the safety and security zones described in paragraph (b) of this section must comply with the instructions of the COTP or his/her authorized representative.

[CGD01–02–023, 67 FR 63263, Oct. 11, 2002, as amended by USCG–2007–0087, 73 FR 34194, June 17, 2008]

§ 165.111 Safety Zone: Boston Harbor, Boston, Massachusetts.

(a) The following areas are established as safety zones during the conditions specified:

(1) Around the U.S.S. *Constitution* or any accompanying parade vessels when

Constitution is under way—300 yards in all directions in the waters around the U.S.S. *Constitution* and each parade vessel accompanying *Constitution* whenever the U.S.S. *Constitution* is underway in Boston Harbor from the time such vessels depart their respective berths until the time they complete their transit and are safely moored.

(2) Whenever *Constitution* is moored at Pier 1, Charlestown Navy Yard—the waters between Hoosac Pier and Pier 1, Charlestown Navy Yard, from the imaginary line connecting the outer easternmost point protruding into Boston Harbor from Hoosac Pier to the outer westernmost point protruding into Boston Harbor from Pier 1, Charlestown Navy Yard, extending inbound along the face of both piers to the landside points where both piers end.

(3) Around the U.S.S. *Constitution*—fifty yards in all directions in the waters around *Constitution* when the vessel is moored at any Boston berthing location other than Pier 1, Charlestown Navy Yard.

(b) The general regulations governing safety zones as contained in 33 CFR 165.23 apply.

[CGD1 91–109, 57 FR 30407, July 9, 1992]

§ 165.112 Safety Zone: USS CASSIN YOUNG, Boston, Massachusetts.

(a) *Location*. The following area is a safety zone:

Around the USS CASSIN YOUNG (DD–793) and any accompanying parade vessels when the USS CASSIN YOUNG is underway. The zone extends 100 yards in all directions in the waters around the USS CASSIN YOUNG and accompanying parade vessels whenever the USS CASSIN YOUNG is underway in Boston Harbor from the time the USS CASSIN YOUNG departs its berth until it is safely moored.

(b) *Regulations*. The general regulations governing safety zones as contained in 33 CFR 165.23 apply.

[CGD01–93–001, 58 FR 47991, Sept. 14, 1993]

§ 165.113 Security Zone: Dignitary arrival/departure Logan International Airport, Boston, MA.

(a) *Location*. The permanent security zone consists of four sectors that may be activated in part, or in whole, upon the request of the U.S. Secret Service. These zones are for the protection of the President or Vice President of the United States, as well as visiting heads of foreign states or foreign governments arriving at, or departing from, Logan International Airport and as determined by the transit route across Boston Harbor. The security zone will be as follows:

(1) Sector one will go into effect 15 minutes prior to the scheduled landing or takeoff of the aircraft carrying either the President, Vice President, or visiting heads of foreign states or foreign governments at Logan International Airport. Sector one will preclude all vessels from approaching within three hundred yards of the Logan International Airport shoreline, bound on the west by a line drawn between positions 42°22′45″ N., 071°01′05″ W. and 42°21′48″ N., 071°01′45″ W. (NAD) 1983).

(2) Sector two will go into effect 15 minutes before the vehicle carrying the President, Vice President, or visiting heads of foreign states or foreign governments enters the Callahan Tunnel or Sumner Tunnel. Sector two may preclude vessels, as necessary, from entering an area of the main ship channel, Boston Inner Harbor; fifty yards in all directions from a point directly above the Callahan Tunnel or Sumner Tunnel.

(3) Sector three will go into effect 15 minutes before the vehicle carrying the President, Vice President, or visiting heads of foreign states or foreign governments enters the Ted Williams Tunnel. Sector three may preclude vessels, as necessary, from entering an area of the main ship channel, Boston Inner Harbor, fifty yards in all directions from a point directly above the Ted Williams Tunnel.

(4) Sector four will go into effect 15 minutes before the President, Vice President, or visiting heads of foreign states or foreign governments board the designated transport vessel. Sector four will preclude all vessels from approaching within three hundred yards in all directions from the designated vessel transporting the President, Vice President, or visiting heads of foreign states or foreign governments between

Logan International Airport and any location in Boston Harbor.

(5) The activation of a particular sector of this security zone will be announced via Safety Marine Information Broadcasts and/or by locally issued notices.

(b) *Regulations.* (1) The general regulations covering security zones contained in 33 CFR 165.33 apply.

(2) All persons and vessels shall comply with the instructions of the Coast Guard Captain of the Port or the designated on scene patrol personnel. Coast Guard patrol personnel include commissioned, warrant, and petty officers of the Coast Guard. Upon being hailed by a Coast Guard vessel via siren, radio, flashing light, or other means, the operator of a vessel shall proceed as directed.

[CGD01–97–004, 63 FR 16117, Apr. 2, 1998]

§ 165.114 Safety and Security Zones: Escorted Vessels—Boston Harbor, Massachusetts.

(a) *Location.* The following waters within the Boston Captain of the Port Zone, 1000 yards ahead and astern, and 100 yards on each side of any designated escorted vessel, are established as safety and security zones: All waters of Boston Inner Harbor, including the waters of the Mystic River, Chelsea River, and Reserved Channel west of a line running from Deer Island Light, at position 42°20′25″ N, 070°57′15″ W, to Long Island, at position 42°19′48″ N, 070°57′15″ W, and west of the Long Island Bridge, running from Long Island to Moon Head.

(b) *Escorted vessel definition.* For the purposes of this section, escorted vessels operating in Boston Harbor include the following: Any vessels deemed to be in need of escort protection by the Captain of the Port, Boston for security reasons.

(c) *Regulations.* (1) In accordance with the general regulations in §§165.23 and 165.33 of this part, entry into or movement within this zone is prohibited unless authorized by the Captain of the Port Boston.

(2) All vessel operators shall comply with the instructions of the COTP or the designated on-scene U.S. Coast Guard patrol personnel. On-scene Coast Guard patrol personnel include commissioned, warrant, and petty officers of the Coast Guard on board Coast Guard, Coast Guard Auxiliary, local, state, and federal law enforcement vessels.

[CGD01–01–227, 67 FR 20912, Apr. 29, 2002, as amended by CGD01–01–227, 67 FR 63265, Oct. 11, 2002]

§ 165.115 Safety and Security Zones; Pilgrim Nuclear Power Plant, Plymouth, Massachusetts.

(a) *Location.* All waters of Cape Cod Bay and land adjacent to those waters enclosed by a line beginning at position 41°56′59.3″ N, 070°34′58.5″ W; thence to 1°57′12.2″ N, 070°34′41.9″ W; thence to 41°56′42.3″ N, 070°34′00.1″ W; thence to 41°56′29.5″ N, 070°34′14.5″ W.

(b) *Regulations.* (1) In accordance with the general regulations in §§165.23 and 165.33 of this part, entry into or movement within these zones is prohibited unless authorized by the Captain of the Port Boston.

(2) All vessel operators shall comply with the instructions of the COTP or the designated on-scene U.S. Coast Guard patrol personnel. On-scene Coast Guard patrol personnel include commissioned, warrant, and petty officers of the Coast Guard on board Coast Guard, Coast Guard Auxiliary, local, state, and federal law enforcement vessels.

(3) No person may enter the waters or land area within the boundaries of the safety and security zones unless previously authorized by the Captain of the Port, Boston or his authorized patrol representative.

[CGD01–02–002, 67 FR 37693, May 30, 2002, as amended by USCG–2009–0311, 74 FR 50925, Oct. 2, 2009]

§ 165.116 Safety and Security Zones; Salem and Boston Harbors, Massachusetts.

(a) *Location.* The following areas are permanent safety and security zones:

(1) *Reserved Channel, Boston Harbor.* All waters of Boston Harbor within one hundred fifty (150) yards off the bow and stern and one hundred (100) yards abeam of any vessel moored at the Massachusetts Port Authority Black Falcon Terminal;

(2) *Boston Inner Harbor.* All waters of Boston Harbor within one hundred (100)

feet of the Coast Guard Integrated Support Command (ISC) Boston piers and;

(3) *Salem Harbor*. All waters of Salem Harbor within a two-hundred and fifty (250) yard radius of the center point of the PG & E Power Plant Terminal Wharf, Salem, MA, located at 42°31.33′ N, 070°52.67′ W when a vessel is moored at this pier. All coordinates are North American Datum 1983.

(b) *Regulations*. (1) In accordance with the general regulations in § 165.23 and § 165.33 of this part, entry into or movement within these zones is prohibited unless authorized by the Captain of the Port Boston.

(2) All vessel operators shall comply with the instructions of the Captain of the Port or the designated on-scene U.S. Coast Guard patrol personnel. On-scene Coast Guard patrol personnel include commissioned, warrant, and petty officers of the Coast Guard on board Coast Guard, Coast Guard Auxiliary, local, state, and federal law enforcement vessels.

(3) No person may enter the waters or land area within the boundaries of the safety and security zones unless previously authorized by the Captain of the Port, Boston or his authorized patrol representative.

[CGD01–02–016, 67 FR 45909, July 11, 2002, as amended by USCG–2009–0416, 74 FR 27441, June 10, 2009]

§ 165.117 Regulated Navigation Areas, Safety and Security Zones: Deepwater Ports, First Coast Guard District.

(a) *Location*—(1) *Regulated navigation areas*. All waters within a 1,000 meter radius of the geographical positions set forth in paragraph (a)(3) of this section are designated as regulated navigation areas.

(2) *Safety and security zones*. All waters within a 500-meter radius of the geographic positions set forth in paragraph (a)(3) of this section are designated as safety and security zones.

(3) *Coordinates*. (i) The geographic coordinates forming the loci for the regulated navigation areas, safety and security zones for the Northeast Gateway Deepwater Port are: 42°23′38″ N, 070°35′31″ W; and 42°23′56″ N, 070°37′00″ W (NAD 83).

(ii) [Reserved]

(b) *Definitions*. As used in this section—

Authorized representative means a Coast Guard commissioned, warrant, or petty officer or a Federal, State, or local law enforcement officer designated by or assisting the Captain of the Port (COTP) Boston.

Deepwater port means any facility or structure meeting the definition of deepwater port in 33 CFR 148.5.

Dredge means fishing gear consisting of a mouth frame attached to a holding bag constructed of metal rings or mesh.

Support vessel means any vessel meeting the definition of support vessel in 33 CFR 148.5.

Trap means a portable, enclosed device with one or more gates or entrances and one or more lines attached to surface floats used for fishing. Also called a pot.

(c) *Applicability*. This section applies to all vessels operating in the regulated navigation areas set forth in paragraph (a) of this section, except—

(1) Those vessels conducting cargo transfer operations with the deepwater ports whose coordinates are provided in paragraph (a)(3) of this section,

(2) Support vessels operating in conjunction therewith, and

(3) Coast Guard vessels or other law enforcement vessels operated by or under the direction of an authorized representative of the COTP Boston.

(d) *Regulations*. (1) No vessel may anchor, engage in diving operations, or commercial fishing using nets, dredges, traps (pots), or use of remotely operated vehicles (ROVs) in the regulated navigation areas set forth in paragraph (a)(1) of this section.

(2) In accordance with the general regulations in §§ 165.23 and 165.33 of this part, entry into or movement within the safety and security zones designated in paragraph (a)(2) of this section is prohibited unless authorized by the COTP Boston, or his/her authorized representative.

(3) Notwithstanding paragraph (d)(2) of this section, tankers and support vessels, as defined in 33 CFR 148.5, operating in the vicinity of NEGDWP are authorized to enter and move within such zones in the normal course of

their operations following the requirements set forth in 33 CFR 150.340 and 150.345, respectively.

(4) All vessels operating within the safety and security zones described in paragraph (a)(2) of this section must comply with the instructions of the COTP or his/her authorized representative.

[USCG–2007–0087, 73 FR 34194, June 17, 2008, as amended by USCG–2009–0589, 75 FR 51377, Aug. 20, 2010]

EDITORIAL NOTE: By USCG–2009–0589, 75 FR 51377, Aug. 20, 2010, § 165.117 was amended by revising paragraph (a)(3); however, the amendment could not be incorporated due to inaccurate amendatory instruction.

§ 165.118 Safety Zones; recurring annual events held in Coast Guard Sector Boston Captain of the Port Zone.

The Coast Guard is establishing safety zones for the events listed in Table 1 of this section. These regulations in this section will be enforced for the duration of each event, on or about the dates indicated in Table 1 of this section. Annual notice of the exact dates and times of the effective period of the regulations in this section with respect to each event, the geographical description of each regulated area, and details concerning the nature of the event and the number of participants and type(s) of vessels involved will be made to the local maritime community through the Local Notice to Mariners and/or Broadcast Notice to Mariners well in advance of the events. If the event does not have a date listed, then the exact dates and times of the enforcement will be announced through a Notice of Enforcement in the FEDERAL REGISTER. Mariners should consult the FEDERAL REGISTER or their LNM to remain apprised of minor schedule or event changes. First Coast Guard District LNM can be found at: *http://www.navcen.uscg.gov/*. The Sector Boston Marine Events schedule can also be viewed electronically at: *http://www.homeport.uscg.mil*. Although listed in the Code of Federal Regulations, sponsors of events listed in Table 1 of this section are still required to submit a marine event permit application each year in accordance with 33 CFR 100.15.

(a) The Coast Guard may patrol each event area under the direction of a designated Coast Guard Patrol Commander. The Patrol Commander may be contacted on Channel 16 VHF–FM (156.8 MHz) by the call sign ''PATCOM.'' Official patrol vessels may consist of any Coast Guard, Coast Guard Auxiliary, state, or local law enforcement vessels assigned or approved by the Captain of the Port, Sector Boston.

(b) Vessels may not transit the regulated areas without Patrol Commander approval. Vessels permitted to transit must operate at a no wake speed, in a manner which will not endanger participants or other crafts in the event.

(c) Spectators or other vessels shall not anchor, block, loiter, or impede the movement of event participants or official patrol vessels in the regulated areas during the effective dates and times, or dates and times as modified through the LNM, unless authorized by an official patrol vessel.

(d) The Patrol Commander may control the movement of all vessels in the regulated area. When hailed or signaled by an official patrol vessel, a vessel shall come to an immediate stop and comply with the lawful directions issued. Failure to comply with a lawful direction may result in expulsion from the area, citation for failure to comply, or both.

(e) The Patrol Commander may delay or terminate any marine event in this subpart at any time it is deemed necessary to ensure the safety of life or property. Such action may be justified as a result of weather, traffic density, spectator operation or participant behavior.

(f) For all fireworks displays listed below, the regulated area is that area of navigable waters within a 350-yard radius of the launch platform or launch site for each fireworks display, unless modified in the LNM at: *http://www.navcen.uscg.gov/*.

(g) For all swimming events listed, vessels not associated with the event shall maintain a distance of at least 100 yards from the participants.

TABLE 1

6.0	June
6.1 Sand and Sea Festival Fireworks	• Event Type: Fireworks Display. • Sponsor: Salisbury Beach Partnership, Inc. • Date: A one-night event on Saturday during the last weekend of June, as specified in the USCG District 1 Local Notice to Mariners. • Time: 10:00 p.m. to 10:30 p.m. • Location: All waters of the Atlantic Ocean near Salisbury Beach within a 350-yard radius of the fireworks launch site located at position 42°50.6′ N, 70°48.4′ W (NAD 83).
6.2 St. Peter's Fiesta Fireworks	• Event Type: Fireworks Display. • Sponsor: St. Peters Fiesta. • Date: A one-night event on Saturday during the last weekend of June, as specified in the USCG District 1 Local Notice to Mariners. • Time: 8:00 p.m. to 10:00 p.m. • Location: All waters of Gloucester Harbor, Stage Fort Park, within a 350-yard radius of the fireworks launch site on the beach located at position 42°36.3′ N, 070°40.5′ W (NAD 83).
6.3 Surfside Fireworks	• Event Type: Fireworks Display. • Sponsor: Salisbury Beach Partnership and Chamber of Commerce. • Date: Every Saturday from June through September, as specified in the USCG District 1 Local Notice to Mariners. • Time: 9:30 p.m. to 10:30 p.m. • Location: All waters of the Atlantic Ocean near Salisbury Beach, MA, within a 350-yard radius of the fireworks barge located at position 42°50.6′ N, 070°48.4′ W (NAD 83).
6.4 Cohasset Triathlon	• Event Type: Swim. • Sponsor: Bill Burnett. • Date: A one-day event on Sunday during the last weekend of June, as specified in the USCG District 1 Local Notice to Mariners. • Time: 08:30 a.m. to 10:00 a.m. • Location: All waters in the vicinity of Cohasset Harbor around Sandy Beach, within the following points (NAD 83): 42°15.6′ N, 070°48.1′ W. 42°15.5′ N, 070°48.1′ W. 42°15.4′ N, 070°47.9′ W. 42°15.4′ N, 070°47.8′ W.
6.5 Hull Youth Football Carnival Fireworks	• Event Type: Fireworks Display. • Sponsor: Hull Youth Football. • Date: A one-night event on the third or fourth weekend of June, as specified in the USCG District 1 Local Notice to Mariners Time: 9:00 p.m. to 11:00 p.m. • Location: All waters within a 450-foot radius of the fireworks barge located approximately 500 feet of off Nantasket Beach, Hull MA located at position 42°16.6′ N, 070°51.7′ W (NAD 83).
7.0	**July**
7.1 City of Lynn 4th of July Celebration Fireworks	• Event Type: Firework Display. • Sponsor: City of Lynn. • Date: July 3rd, as specified in the USCG District 1 Local Notice to Mariners. • Time: 6:00 p.m. to 11:00 p.m. • Location: All waters of Nahant Bay, within a 350-yard radius of the fireworks barge located at position 42°27.62 ′ N, 070°55.58′ W (NAD 83).
7.2 Gloucester July 4th Celebration Fireworks	• Event Type: Fireworks Display. • Sponsor: The Gloucester Fund. • Date: July 3rd, as specified in the USCG District 1 Local Notice to Mariners. • Time: 10:30 p.m. to 11:00 p.m. • Location: All waters of Gloucester Harbor, Stage Fort Park, within a 350-yard radius of the fireworks launch site on the beach located at position 42°36.3′ N, 070°40.5′ W (NAD 83).
7.3 Manchester by the Sea Fireworks	• Event Type: Fireworks Display. • Sponsor: Manchester Parks and Recreation Department. • Date: July 4th, as specified in the USCG District 1 Local Notice to Mariners. • Time: 8:30 p.m. to 10:00 p.m.

TABLE 1—Continued

	• Location: All waters of Manchester Bay within a 350-yard radius of the fireworks launch site barge located at position 42°35.03′ N, 070°45.52′ W (NAD 83).
7.4 Weymouth 4th of July Celebration Fireworks	• Event Type: Fireworks Display. • Sponsor: Town of Weymouth 4th of July Committee. • Date: Friday or Saturday during the first weekend before July 4th, as specified in the USCG District 1 Local Notice to Mariners. • Time: 8:00 p.m. to 10:30 p.m. • Location: All waters of Weymouth Fore River, within a 350-yard radius of the fireworks launch site located at position 42°15.5′ N, 070°56.1′ W (NAD 83).
7.5 Beverly 4th of July Celebration Fireworks	• Event Type: Fireworks Display. • Sponsor: Beverly Harbormaster. • Date: July 4th, as specified in the USCG District 1 Local Notice to Mariners. • Time: 9:00 p.m. to 11:00 p.m. • Location: All waters of Beverly Harbor within a 350-yard radius of the fireworks launch barge located at position 42°32.62′ N, 070°52.15′ W (NAD 83).
7.6 Beverly Farms 4th of July Celebration Fireworks	• Event Type: Fireworks Display. • Sponsor: Farms-Pride 4th of July Committee. • Date: July 4th, as specified in the USCG District 1 Local Notice to Mariners. • Time: 9:00 p.m. to 9:30 p.m. • Location: All waters of Manchester Bay within a 350-yard radius of the fireworks launch site near West Beach located at position 42°33.84′ N, 070°48.5′ W (NAD 83).
7.7 Boston Pops Fireworks	• Event Type: Fireworks Display. • Sponsor: Boston 4 Celebrations. • Date: July 4th, as specified in the USCG District 1 Local Notice to Mariners. • Time: 8:30 p.m. to 11:00 p.m. • Location: All waters of the Charles River within a 350-yard radius of the fireworks barges located in the vicinity of position 42°21.47′ N, 071°05.03′ W (NAD 83).
7.8 City of Salem Fireworks	• Event Type: Fireworks Display. • Sponsor: City of Salem. • Date: July 4th, as specified in the USCG District 1 Local Notice to Mariners. • Time: 9:00 p.m. to 10:00 p.m. • Location: All waters of Salem Harbor, within a 350-yard radius of the fireworks launch site located on Derby Wharf at position 42°31.15′ N, 070°53.13′ W (NAD 83).
7.9 Marblehead 4th of July Fireworks	• Event Type: Fireworks Display. • Sponsor: Town of Marblehead. • Date: July 4th, as specified in the USCG District 1 Local Notice to Mariners. • Time: 8:30 p.m. to 9:30 p.m. • Location: All waters of Marblehead Harbor within a 350-yard radius of the fireworks launch site located at position 42°30.34′ N, 070°50.13′ W (NAD 83).
7.10 Plymouth 4th of July Fireworks	• Event Type: Fireworks Display. • Sponsor: July 4 Plymouth, Inc. • Date: July 4th, as specified in the USCG District 1 Local Notice to Mariners. • Time: 9:00 p.m. to 10:00 p.m. • Location: All waters of Plymouth Harbor within a 350-yard radius of the fireworks launch site located at position 42°57.3′ N, 070°38.3′ W (NAD 83).
7.11 Town of Nahant Fireworks	• Event Type: Fireworks Display. • Sponsor: Town of Nahant. • Date: July 4th, as specified in the USCG District 1 Local Notice to Mariners. • Time: 9:00 p.m. to 11:00 p.m. • Location: All waters of Nahant Harbor within a 350-yard radius of the fireworks launch site on Bailey's Hill Park located at position 42°25.1′ N, 070°55.8′ W (NAD 83).
7.12 Town of Revere Fireworks	• Event Type: Fireworks Display. • Sponsor: Town of Revere. • Date: July 4th, as specified in the USCG District 1 Local Notice to Mariners. • Time: 9:00 p.m. to 11:00 p.m.

TABLE 1—Continued

	• Location: All waters of Broad Sound, within a 350-yard radius of the fireworks launch site located at Revere Beach at position 42°24.5′ N, 070°59.47′ W (NAD 83).
7.13 Yankee Homecoming Fireworks	• Event Type: Fireworks Display. • Sponsor: Yankee Homecoming. • Date: A one-day event on Saturday during the last weekend of July or first weekend of August, as specified in the USCG District 1 Local Notice to Mariners. • Time: 9:00 p.m. to 10:00 p.m.
	• Location: All waters of the Merrimack River, within a 350-yard radius of the fireworks launch site located at position 42°48.97′ N, 070°52.68′ W (NAD 83).
7.14 Hingham 4th of July Fireworks	• Event Type: Fireworks Display. • Sponsor: Hingham Lions Club. • Date: July 4th, as specified in the USCG District 1 Local Notice to Mariners. • Time: 8:00 p.m. to 10:00 p.m.
	• Location: All waters within a 350-yard radius of the beach on Button Island located at position 42°15.07′ N, 070°53.03′ W (NAD 83).
7.15 Ipswich Independence Day Celebration Fireworks	• Event Type: Fireworks Display. • Sponsor: Trustees of the Foundation. • Date: July 4th, as specified in the USCG District 1 Local Notice to Mariners. • Time: 9:00 p.m. to 10:00 p.m.
	• Location: All waters of Ipswich Bay within a 350-yard radius of the beach located at position 42°41.43′ N, 070°46.49′ W (NAD 83).
7.16 Salisbury Maritime Festival Fireworks	• Event Type: Fireworks Display. • Sponsor: Salisbury Beach Partnership, Inc. • Date: A one-day event on Saturday during the third weekend of July, as specified in the USCG District 1 Local Notice to Mariners. • Time: 10:00 p.m. to 10:30 p.m.
	• Location: All waters of the Atlantic Ocean near Salisbury Beach within a 350-yard radius of the fireworks launch site located at position 42°50.6′ N, 070°48.4′ W (NAD 83).
7.17 Salisbury 4th of July Fireworks	• Event Type: Fireworks Display. • Sponsor: Salisbury Chamber of Commerce. • Date: July 4th, as specified in the USCG District 1 Local Notice to Mariners. • Time: 9:30 p.m. to 11:00 p.m.
	• Location: All waters of the Atlantic Ocean near Salisbury Beach within a 350-yard radius of the fireworks launch site located at position 42°50.6′ N, 070°48.4′ W (NAD 83).
7.18 Charles River 1-Mile Swim	• Event Type: Swim. • Sponsor: Charles River Swimming Club, Inc. • Date: A one-day event held on the second Sunday in July, as specified in the USCG District 1 Local Notice to Mariners. • Time: 8:00 a.m. to 9:00 a.m.
	Location: All waters of Charles River between the Longfellow Bridge and the Harvard Bridge within the following points (NAD 83): 42°21.7′ N, 071°04.8′ W. 42°21.7′ N, 071°04.3′ W. 42°22.2′ N, 071°07.3′ W. 42°22.1′ N, 070°07.4′ W.
7.19 Swim Across America Boston	• Event Type: Swim. • Sponsor: Swim Across America. • Date: A one-day event on Friday during the third week of July, as specified in the USCG District 1 Local Notice to Mariners. • Time: 7:00 a.m. to 3:00 p.m.
	• Location: All waters of Boston Harbor between Rowes Warf and Little Brewster Island within the following points (NAD 83): 42°21.4′ N, 071°03.0′ W. 42°21.5′ N, 071°02.9′ W. 42°19.8′ N, 070°53.6′ W. 42°19.6′ N, 070°53.4′ W.
7.20 Joppa Flats Open Water Mile	• Event Type: Swim. • Sponsor: Newburyport YMCA. • Date: A one-day event on Saturday during the last week of July, as specified in the USCG District 1 Local Notice to Mariners.

TABLE 1—Continued

	• Time: 3:00 p.m. to 5:00 p.m. • Location: All waters of the Merrimack River located in the Joppa Flats within the following points (NAD 83): 42°48.6′ N, 070°50.9′ W. 42°48.6′ N, 070°49.4′ W. 42°48.0′ N, 070°49.4′ W. 42°48.0′ N, 070°57.0′ W.
7.21 Swim Across America Nantasket Beach	• Event Type: Swim. • Sponsor: Swim Across America. • Date: A one-day event on Sunday during the third week of July, as specified in the USCG District 1 Local Notice to Mariners. • Time: 7:00 a.m. to 9:30 a.m. • Location: All waters of Massachusetts Bay near Nantasket Beach within the following points (NAD 83): 42°16.7′ N, 070°51.9′ W. 42°16.9′ N, 070°51.3′ W. 42°16.3′ N, 070°50.5′ W. 42°16.1′ N, 070°51.0′ W.
8.0	August
8.1 Beverly Homecoming Fireworks	• Event Type: Fireworks Display. • Sponsor: Beverly Harbormaster. • Date: A one-day event on Sunday during the first weekend of August, as specified in the USCG District 1 Local Notice to Mariners. • Time: 9:00 p.m. to 11:00 p.m. • Location: All waters of Beverly Harbor within a 350-yard radius of the fireworks barge located at position 42°32.62′ N, 070°52.15′ W (NAD 83).
8.2 Celebrate Revere Fireworks	• Event Type: Fireworks Display. • Sponsor: Town of Revere. • Date: A one-day event on Saturday during the first weekend of August, as specified in the USCG District 1 Local Notice to Mariners. • Time: 9:00 p.m. to 11:00 p.m. • Location: All waters within a 350-yard radius of the fireworks launch site located at Revere Beach at position 42°24.5′ N, 070°59.47′ W (NAD 83).
8.3 Gloucester Fisherman Triathlon	• Event Type: Swim. • Sponsor: Gloucester Fisherman Athletic Association. • Date: A one-day event on Sunday during the Second week of August, as specified in the USCG District 1 Local Notice to Mariners. • Time: 7:30 a.m. to 8:30 a.m. • Location: All waters of Western Harbor, within the following points (NAD 83): 42°36.6′ N, 070°40.3′ W. 42°36.5′ N, 070°40.2′ W. 42°36.4′ N, 070°40.7′ W. 42°36.5′ N, 070°40.7′ W.
8.4 Urban Epic Triathlon	• Event Type: Swim. • Sponsor: Tri-Maine/Urban Epic Events. • Date: A one-day event on Sunday during the second week of August, as specified in the USCG District 1 Local Notice to Mariners. • Time: 7:00 a.m. to 10:00 a.m. • Location: All waters of Dorchester Bay within the following points (NAD 83): 42°18.9′ N, 071°02.0′ W. 42°18.9′ N, 071°01.8′ W. 42°19.5′ N, 071°01.8′ W. 42°19.8′ N, 071°02.2′ W.
8.5 Celebrate the Clean Harbor Swim	• Event Type: Swim. • Sponsor: New England Marathon Swimming Association. • Date: A one-day event on Saturday during the third week of August, as specified in the USCG District 1 Local Notice to Mariners. • Time: 9:00 a.m. to 12:00 p.m. • Location: All waters of Gloucester Harbor within the following points (NAD 83): 42°35.3′ N, 070°39.8′ W. 42°35.9′ N, 070°39.2′ W.

TABLE 1—Continued

	42°35.9′ N, 070°39.8′ W. 42°35.3′ N, 070°40.2′ W.
8.6 Boston Light Swim	• Event Type: Swim. • Sponsor: Boston Light Swim. • Date: A one-day event on Sunday during the second week of August, as specified in the USCG District 1 Local Notice to Mariners. • Time: 8:00 a.m. to 1:00 p.m. • Location: All waters of Boston Harbor between the L Street Bath House and Little Brewster Island within the following points (NAD 83): 42°19.7′ N, 071°02.2′ W. 42°19.9′ N, 071°10.7′ W. 42°19.8′ N, 070°53.6′ W. 42°19.6′ N, 070°53.4′ W.
8.7 Sharkfest Swim	• Event Type: Swim. • Sponsor: Enviro-Sports Productions, Inc. • Date: A one-day event on Sunday during the last week of August, as specified in the USCG District 1 Local Notice to Mariners. • Time: 10:00 a.m. to 12:00 p.m. • Location: All waters of Old Harbor from near Columbia Point to Carson Beach within the following points (NAD 83): 42°19.1′ N, 071°02.2′ W. 42°19.2′ N, 071°01.9′ W. 42°19.7′ N, 071°02.8′ W. 42°19.4′ N, 071°02.9′ W.
8.8 The Boston Triathlon	• Event Type: Swim. • Sponsor: Wilkinson Enterprises, Inc. • Date: A one-day event on the second or third weekend of August, as specified in the USCG District 1 Local Notice to Mariners. • Time: 7:00 a.m. to 10:00 a.m. • Location: All waters of Boston Inner Harbor, Piers Park East Boston to Columbus Park, Boston, Ma within the following points (NAD 83): 42°21.7′ N, 071°02.1′ W. 42°21.6′ N, 071°02.8′ W. 42°21.7′ N, 071°02.8′ W. 42°21.8′ N, 071°02.4′ W.
9.0	September
9.1 Gloucester Schooner Festival Fireworks	• Event Type: Fireworks Display. • Sponsor: Stage Fort Park Gloucester. • Date: A one-day event on Saturday during the first weekend of September, as specified in the USCG District 1 Local Notice to Mariners. • Time: 7:00 p.m. to 11:00 p.m. • Location: All waters of Gloucester Harbor within a 350-yard radius of the launch site on the beach located at position 42°36.3′ N, 070°40.5′ W (NAD 83).
9.2 Plymouth Yacht Club Celebration Fireworks	• Event Type: Fireworks Display. • Sponsor: Plymouth Yacht Club. • Date: A one-day event on Saturday during the first weekend of September, as specified in the USCG District 1 Local Notice to Mariners. • Time: 9:00 p.m. to 11:00 p.m. • Location: All waters of Plymouth Harbor within a 350-yard radius of the fireworks barge located at position 41°22.3′ N, 070°39.4′ W (NAD 83).
9.3 Somerville Riverfest Fireworks	• Event Type: Fireworks Display. • Sponsor: Federal Realty Investment Trust. • Date: A one-day event on Saturday during the last weekend of September, as specified in the USCG District 1 Local Notice to Mariners. • Time: 7:30 p.m. to 10:00 p.m. • Location: All waters of the Mystic River within a 350-yard radius of the fireworks barge located at position 42°23.9′ N, 071°04.8′ W (NAD 83).
9.4 Mayflower Triathlon	• Event Type: Swim. • Sponsor: Fast Forward Race Management. • Date: A one-day event on Saturday during the first weekend of September, as specified in the USCG District 1 Local Notice to Mariners.

TABLE 1—Continued

9.5 Plymouth Rock Triathlon	• Time: 10:00 a.m. to 11:00 a.m. • Location: All waters of Plymouth Inner Harbor within the following points (NAD 83): 41°58.3′ N, 070°40.6′ W. 41°58.7′ N, 070°39.1′ W. 41°56.8′ N, 070°37.8′ W. 41°57.1′ N, 070°39.2′ W. • Event Type: Swim. • Sponsor: Fast Forward Race Management. • Date: A one-day event on Sunday during the first weekend of September, as specified in the USCG District 1 Local Notice to Mariners. • Time: 7:00 a.m. to 9:30 a.m. • Location: All waters of Plymouth Inner Harbor within the following points (NAD 83): 41°58.3′ N, 070°40.6′ W. 41°58.7′ N, 070°39.1′ W. 41°56.8′ N, 070°37.8′ W. 41°57.1′ N, 070°39.2′ W.
9.6 Duxbury Beach Triathlon	• Event Type: Swim. • Sponsor: Duxbury Beach Triathlon. • Date: A one-day event on Saturday during the third weekend of September, as specified in the USCG District 1 Local Notice to Mariners. • Time: 08:30 a.m. to 09:30 a.m. • Location: All waters of Duxbury Bay on the south side of the Powder Point Bridge within the following points (NAD 83): 42°02.8′ N, 070°39.1′ W. 42°03.0′ N, 070°38.7′ W. 42°02.8′ N, 070°38.6′ W. 42°02.7′ N, 070°39.0′ W.
9.7 Boston Harbor Sharkfest Swim	• Event Type: Swim. • Sponsor: Enviro-Sports Productions, Inc. • Date: A one-day event on a Saturday during the second or third weekend in September, as specified in the USCG District 1 Local Notice to Mariners. • Time: 10:00 a.m. to 1:00 p.m. • Location: All waters of Boston Inner Harbor, Piers Park East Boston to Fan Pier, South Boston, Ma within the following points (NAD 83): 42°21.7′ N, 071°02.1′ W. 42°21.8′ N, 071°02.4′ W. 42°21.3′ N, 071°02.9′ W. 42°21.3′ N, 071°02.3′ W.
10.0	October
10.1 Intercontinental Fireworks	• Event Type: Fireworks Display. • Sponsor: Intercontinental Hotel. • Date: A one-day event on Sunday during the last weekend of October, as specified in the USCG District 1 Local Notice to Mariners. • Time: 8:30 p.m. to 10:30 p.m. Location: All waters of Boston Inner Harbor within a 350-yard radius of the fireworks barge located at position 42°21.2′ N, 071°03′ W (NAD 83).
12.0	December
12.1 First Night Boston Fireworks	• Event Type: Fireworks Display. • Sponsor: First Night, Inc. • Date: A one-day event on New Year's Eve, as specified in the USCG District 1 Local Notice to Mariners. • Time: 11:30 p.m. to 12:30 a.m. • Location: All waters of Boston Inner Harbor within a 350-yard radius of the fireworks barge located at position 42°21.7′ N, 071°02.6′ W (NAD 83).

[USCG–2011–0109, 76 FR 69626, Nov. 9, 2011, as amended by USCG–2013–0060, 78 FR 67030, Nov. 8, 2013

§ 165.119 Safety Zone; Captain of the Port Boston Fireworks display zones, Boston Harbor, Boston, MA.

(a) *Boston Inner Harbor*. The following areas are designated as safety zones:

(1) *Charlestown Safety Zone*. All U.S. navigable waters of Boston inner Harbor within a 700-foot radius of the fireworks barge in approximate position 42°22′12.7″ N 071°02′53″ W (NAD 1983), located off of Pier 5 Charlestown Navy Yard.

(2) *Long Wharf Safety Zone*. All U.S. navigable waters of Boston inner Harbor within a 700-foot radius of the fireworks barge in approximate position 42°21′41.2″ N 071°02′36.5″ W (NAD 1983), located off of Long Wharf, Boston MA.

(3) *Fan Pier Safety Zone*. All U.S. navigable waters of Boston inner Harbor within a 700-foot radius of the fireworks barge in approximate position 42°21′23.2″ N 071°02′26″ W (NAD 1983), located off of the Fan Pier, South Boston, MA.

(4) *Pier 6 Safety Zone*. All U.S. navigable waters of Boston inner Harbor within a 700-foot radius of the fireworks barge in approximate position 42°21′11.9″ N 071°02′1.3″ W (NAD 1983), located off of Pier 6, South Boston, MA.

(5) *North Jetty Safety Zone*. All U.S. navigable waters of Boston inner Harbor within a 700-foot radius of the fireworks barge in approximate position 42°21′01″ N 071°01′31.7″ W (NAD 1983), located off of the North Jetty, South Boston, MA.

(6) *Castle Island Safety Zone*. All U.S. navigable waters of Boston inner Harbor within a 700-foot radius of the fireworks barge in approximate position 42°20′27.4″ N 071°00′28.1″ W (NAD 1983), located off of the Castle Island, South Boston, MA.

(b) *Notification*. Coast Guard Sector Boston will use all appropriate means to notify the public in advance of an event of the enforcement of these safety zones to include publishing a Notice of Enforcement in the FEDERAL REGISTER and through the local Notice to Mariners and Broadcast Notice to Mariners. Fireworks barges used in these locations will also have a sign on their port and starboard side labeled ''FIREWORKS—STAY AWAY''. This sign will consist of a ten inch high by one and half inch wide red lettering on a white background.

(c) *Enforcement period*. The Coast Guard anticipates that these safety zones will be enforced between 6:00 p.m. (e.s.t.) and 1:00 a.m. (e.s.t.). The exact dates and times will be published as described in paragraph (b) of this section.

(d) *Definitions*. For purposes of this section ''Designated representative'' is any Coast Guard commissioned, warrant, or petty officer who has been designated by the Captain of the Port Boston (COTP) to act on the COTP's behalf. The designated representative may be on an Official Patrol Vessel; Official Patrol Vessel may consist of any Coast Guard, Coast Guard Auxiliary, state, or local law enforcement vessels assigned or approved by the COTP or the designated representative may be on shore and will communicate with vessels via VHF–FM radio or loudhailer. In addition, members of the Coast Guard Auxiliary may be present to inform vessel operators of this regulation.

(e) No vessels, except for fireworks barges and accompanying vessels, will be allowed to enter into, transit through, or anchor within one of the aforementioned safety zones during an enforcement period without the permission of the COTP or the designated representative.

(f) All persons and vessels permitted to enter one of these safety zones during an enforcement period shall comply with the instructions of the COTP or the designated on-scene representative. Upon being hailed by a U.S. Coast Guard vessel by siren, radio, flashing light, or other means, the operator of a vessel shall proceed as directed.

(g) Vessel operators desiring to enter or operate within a safety zone during a period of enforcement shall contact the COTP or the designated on-scene representative via VHF channel 16 or 617–223–5757 (Sector Boston Command Center) to obtain permission.

[USCG–2013–0503, 79 FR 26848, May 12, 2014]

§ 165.121 Safety and Security Zones: High Interest Vessels, Narragansett Bay, Rhode Island.

(a) *Location*. (1) All waters of Rhode Island Sound within a ½ mile radius of

any high interest vessel while the vessel is anchored within ½ mile of the point Latitude 41°25′ N, Longitude 71°23′ W in the Narragansett Bay Precautionary Area.

(2) All waters of Rhode Island Sound, Narragansett Bay, the Providence and Taunton Rivers 2 miles ahead and 1 mile astern, and extending 1000 yards on either side of any high interest vessel transiting Narragansett Bay, or the Providence and Taunton Rivers.

(3) All waters and land within a 1000-yard radius of any high interest vessel moored at a waterfront facility in the Providence Captain of the Port zone.

(b) *High interest vessels defined.* For purposes of this section, high interest vessels operating in the Providence Captain of the Port zone include the following: barges or ships carrying liquefied petroleum gas (LPG), liquefied natural gas (LNG), chlorine, anhydrous ammonia, or any other cargo deemed to be high interest by the Captain of the Port, Providence.

(c) *Regulations.* (1) Entry into or movement within these zones, including below the surface of the water, during times in which high interest vessels are present and the zones are enforced is prohibited unless authorized by the COTP Providence or authorized representative.

(2) The general regulations covering safety and security zones in §§165.23 and 165.33, respectively, of this part apply.

(3) All persons and vessels shall comply with the instructions of the COTP, and the designated on-scene U.S. Coast Guard personnel. On-scene Coast Guard patrol personnel include commissioned, warrant, and petty officers of the Coast Guard on board Coast Guard, Coast Guard Auxiliary, local, state, and federal law enforcement vessels.

[CGD01–02–065, 67 FR 56224, Sept. 3, 2002, as amended by USCG–2013–0060, 78 FR 67030, Nov. 8, 2013]

§ 165.122 Regulated Navigation Area: Navigable waters within Narragansett Bay and the Providence River, Rhode Island.

(a) *Description of the regulated navigation area (RNA).* The Regulated Navigation Area (RNA) encompasses all of the navigable waters of Narragansett Bay north of the COLREGS demarcation line and west of the Mt. Hope Bridge, and all of the navigable waters of the Providence River from Conimicut Point to the Providence hurricane barrier.

(b) *Regulations.* (1) All commercial vessels must:

(i) Maintain a minimum 10% of the vessel's draft as an under-keel clearance when not assisted by tugs, or when not moored at an assigned berth. Under-keel clearance is the minimum clearance available between the deepest point on the vessel and the bottom of the waterway, in calm water.

(ii) Have at least one mile of visibility to transit the Providence River between 41°43′01.4″ N; 071°20′41.7″ W (Conimicut Light (LLNR 18305)) and 41°47′38.8″ N; 071°22′46.7″ W (Channel Light 42 (LLNR 18580)).

(2) Vessels over 65 feet in length inbound for berths in the Providence River are required to make Safety Signal (SECURITE) calls on both VHF channels 13 and 16 at the following geographic locations:

(i) Pilot Boarding Area;

(ii) Abeam of Castle Hill;

(iii) Abeam of Sandy Point;

(iv) Abeam of 41°43′01.4″ N; 071°20′41.7″ W (Conimicut Point Light (LLNR 18305));

(v) Abeam of Sabin Point; and

(vi) Upon mooring.

(3) Vessels over 65 feet in length inbound for berths in Mount Hope Bay or in the Taunton River are required to make SECURITE calls on both VHF channels 13 and 16 at the following geographic locations:

(i) Pilot Boarding Area;

(ii) Abeam of Castle Hill;

(iii) Abeam of Sandy Point; and

(iv) At position 41°39′32.4″ N;071°14′ 02.6″ W (Mount Hope Bay Junction Lighted Gong Buoy ''MH'' (LLNR 18790)).

(4) Vessels over 65 feet in length outbound for sea down the Providence River Channel shall make SECURITE calls on VHF channels 13 and 16 at the following geographic locations:

(i) One-half hour prior to departure from the berth;

(ii) At departure from the berth;

(iii) Abeam of Sabin Point;

(iv) Abeam of Gaspee Point; and

(v) Abeam of position 41°43′01.4″ N; 071°20′41.7″ W (Conimicut Light (LLNR 18305)).

(5) Vessels over 65 feet in length outbound for sea down from Mount Hope Bay through Narragansett Bay are required to make SECURITE calls on VHF channels 13 and 16 at the following geographic locations:

(i) One-half hour prior to departure from the berth;

(ii) At departure from the berth; and

(iii) At position 41°39′32.4″ N;071°14′02.6″ W (Mount Hope Bay Junction Lighted Gong Buoy ''MH'' (LLNR 18790)).

(6) Vessels 65 feet and under in length, and all recreational vessels, when meeting deep draft commercial vessel traffic in all locations within this RNA shall keep out of the way of the oncoming deep draft commercial vessel. Nothing in this regulation, however, relieves a vessel of any duty prescribed in the Inland Navigation Rules (set forth in 33 U.S.C. 2005 *et seq.*)

(7) The Captain of the Port (COTP) Southeastern New England may authorize a deviation from these regulations. Parties wishing to request a deviation must do so in advance by contacting the COTP Southeastern New England, at 508–457–3211, or via VHF Channel 13 (156.7 MHz), or VHF channel 16 (156.8 MHz). Any person or vessel receiving permission from the COTP to deviate from these regulations must comply with any specific instructions provided by the COTP.

(c) *Enforcement.* Violations of this RNA should be reported to the COTP Southeastern New England at 508–457–3211. Persons found in violation of these regulations may be subject to civil or criminal penalties as provided for in 33 U.S.C. 1232.

[USCG–2009–0143, 75 FR 15347, Mar. 29, 2010]

§ 165.123 Cruise Ships, Sector Southeastern New England Captain of the Port (COTP) Zone.

(a) *Location.* The following areas are security zones: All navigable waters within the Southeastern New England Captain of the Port (COTP) Zone, extending from the surface to the sea floor:

(1) Within a 200-yard radius of any cruise ship that is underway and is under escort of U.S. Coast Guard law enforcement personnel or designated representative, or

(2) Within a 100-yard radius of any cruise ship that is anchored, at any berth or moored.

(b) *Definitions.* For the purposes of this section—

Cruise ship means a passenger vessel as defined in 46 U.S.C. 2101(22), that is authorized to carry more than 400 passengers and is 200 or more feet in length. A *cruise ship* under this section will also include ferries as defined in 46 CFR 2.10–25 that are authorized to carry more than 400 passengers and are 200 feet or more in length.

Designated representative means any Coast Guard commissioned, warrant, or petty officer who has been designated by the COTP to act on the COTP's behalf. The designated representative may be on a Coast Guard vessel, or onboard Federal, state, or a local agency vessel that is authorized to act in support of the Coast Guard.

Southeastern New England COTP Zone is as defined in 33 CFR 3.05–20.

(c) *Enforcement.* The security zones described in this section will be activated and enforced upon entry of any cruise ship into the navigable waters of the United States (see 33 CFR 2.36(a) to include the 12 NM territorial sea) in the Southeastern New England COTP zone. This zone will remain activated at all times while a cruise ship is within the navigable waters of the United States in the Sector Southeastern New England COTP Zone. In addition, the Coast Guard may broadcast the area designated as a security zone for the duration of the enforcement period via Broadcast Notice to Mariners.

(d) *Regulations.* (1) In accordance with the general regulations in 33 CFR part 165, subpart D, no person or vessel may enter or move within the security zones created by this section unless granted permission to do so by the COTP Southeastern New England or the designated representative.

(2) All persons and vessels granted permission to enter a security zone must comply with the instructions of the COTP or the designated representative. Emergency response vessels are authorized to move within the zone,

but must abide by the restrictions imposed by the COTP or the designated representative.

(3) No person may swim upon or below the surface of the water within the boundaries of these security zones unless previously authorized by the COTP or his designated representative.

(4) Upon being hailed by a U.S. Coast Guard vessel or the designated representative, by siren, radio, flashing light or other means, the operator of the vessel shall proceed as directed.

(5) Vessel operators desiring to enter or operate within the security zone shall contact the COTP or the designated representative via VHF channel 16 or 508–457–3211 (Sector Southeastern New England command center) to obtain permission to do so.

[USCG–2010–0803, 76 FR 41075, July 13, 2011]

§ 165.125 Regulated Navigation Area; EPA Superfund Site, New Bedford Harbor, Massachusetts.

(a) *Location*. The regulated navigation area encompasses all waters bounded by a line beginning at 41°37′22.5″ N, 070°54′34.1″ W; thence to 41°37′14.4″ N, 070°54′19.6″ W; thence to 41°36′58.5″ N, 070°54′08.1″ W; thence to 41°36′45.0″ N, 070°54′26.9″ W; thence along the shoreline and south side of the hurricane barrier to the beginning point.

(b) *Regulations*. (1) All vessels and persons are prohibited from activities that would disturb the seabed within the regulated navigation area, including but not limited to anchoring, dragging, trawling, and spudding. Vessels may otherwise transit or navigate within this area without reservation.

(2) The prohibition described in paragraph (b)(1) of this section shall not apply to vessels or persons engaged in activities associated with remediation efforts in the New Bedford Harbor Superfund Site, provided that the Coast Guard Captain of the Port (COTP) Southeastern New England, is given advance notice of those activities by the U.S. Environmental Protection Agency (EPA).

(c) *Waivers*. The Captain of the Port (COTP) Southeastern New England may, in consultation with the U.S. EPA, authorize a waiver from this section if he or she determines that the proposed activity can be performed without undue risk to environmental remediation efforts. Requests for waivers should be submitted in writing to Commander, U.S. Coast Guard Sector Southeastern New England, 1 Little Harbor Road, Woods Hole, MA, 02543, with a copy to the U.S. Environmental Protection Agency, Region 1, New Bedford Harbor Remedial Project Manager, 5 Post Office Square, Suite 100 (OSRR07), Boston, MA 02109, to facilitate review by the EPA and U.S. Coast Guard.

[USCG–2010–1119, 76 FR 35744, June 20, 2011]

§ 165.130 Sandy Hook Bay, New Jersey—security zone.

(a) *Naval Ammunition Depot Piers*. The navigable waters within the following boundaries are a security zone: A line beginning on the shore at 40°25′55.6″ N, 074°04′31.4″ W; thence to 40°26′54.0″ N, 074°03′53.0″ W; thence to 40°26′58.0″ N, 074°04′03.0″ W; thence to 40°27′56.0″ N, 074°03′24.0″ W; thence to 40°27′28.5″ N, 074°02′10.4″ W; thence to 40°26′29.5″ N, 074°02′51.2″ W; thence to 40°26′31.4″ N, 074°02′55.4″ W; thence to 40°25′27.1″ N, 074°03′39.7″ W; thence northwest along the shoreline to the beginning point.

(b) *Terminal Channel*. The waters within the following boundaries are a security zone—A line beginning at 40°27′41.2″ N, 74°02′46″ W; then to 40°28′27″ N, 74°02′17.2″ W; then to 40°28′21.1″ N, 74°02′00″ W; then to 40°28′07.8″ N, 74°02′22″ W; then to 40°27′39.8″ N, 74°02′41.4″ W; then to the beginning.

(c) The following rules apply to the security zone established in paragraph (b) of this section (Terminal Channel) instead of the rule in § 165.33(a):

(1) No vessel shall anchor, stop, remain or drift without power at anytime in the security zone.

(2) No vessel shall enter, cross, or otherwise navigate in the security zone when a public vessel, or any other vessel, that cannot safely navigate outside the Terminal Channel, is approaching or leaving the Naval Ammunition Depot Piers at Leonardo, New Jersey.

(3) Vessels may enter or cross the security zone, except as provided in paragraph (c)(2) of this section.

(4) No person may swim in the security zone.

[CGD 77–118a, 42 FR 35784, July 11, 1977. Redesignated by CGD 81–017, 46 FR 28154, May 26, 1981, and CGD 87–008b, 52 FR 25218, July 6, 1987; USCG–2007–0074, 74 FR 7191, Feb. 13, 2009]

§ 165.141 Safety Zone: Sunken vessel EMPIRE KNIGHT, Boon Island, ME.

(a) *Location*. The following area is a safety zone: All waters of the Atlantic Ocean within a 1,000 yard radius of the stern section of the sunken vessel EMPIRE KNIGHT, in approximate position 43°06′19″ N, 70°27′09″ W, (NAD 1983) and extending from the water's surface to the seabed floor.

(b) *Effective date*. This section is effective on August 23, 1996, twenty-four hours a day, seven days a week.

(c) *Regulations*. (1) The general regulations contained in 33 CFR 165.23 apply.

(2) All vessels and persons are prohibited from anchoring, diving, dredging, dumping, fishing, trawling, laying cable, or conducting salvage operations in this zone except as authorized by the Coast Guard Captain of the Port, Portland, Maine. Innocent transit through the area within the safety zone is not affected by this regulation and does not require the authorization of the Captain of the Port.

(3) All persons and vessels shall comply with the instructions of the COTP or the designated on scene patrol personnel. U.S. Coast Guard patrol personnel include commissioned, warrant, and petty officers of the Coast Guard. Upon being hailed by a U.S. Coast Guard vessel via siren, radio, flashing light, or other means, the operator of a vessel shall proceed as directed.

[CGD 01–95–141, 61 FR 60032, Nov. 26, 1996]

§ 165.150 New Haven Harbor, Quinnipiac River, Mill River.

(a) *Boundaries*. The following is a regulated navigation area: The waters surrounding the Tomlinson Bridge and Pearl Harbor Memorial Bridge (I–95 Bridge) located within a line extending from a point A at 41°17′50.35″ N, 072°54′34.37″ W (the southeast corner of the Magellan Pink Tanks Terminal dock) thence along a line 126°T to point B at 41°17′42.35″ N, 072°54′19.37″ W (the southwest corner of the Gulf facility) thence north along the shoreline to point C at 41°17′57.35″ N, 072°54′04.37″ W (the northwest corner of the R & H Terminal dock) thence along a line 303°T to point D at 41°18′05.35″ N, 072°54′21.37″ W (the west bank of the mouth of the Mill River) thence south along the shoreline to point of origin. All coordinates are North American Datum 1983.

(b) *Regulations*. (1) No person may operate a vessel or tow a barge in this Regulated Navigation Area in violation of these regulations.

(2) Applicability. The regulations apply to barges with a freeboard greater than ten feet and to any vessel towing or pushing these barges on outbound transits of the Tomlinson Bridge.

(3) Regulated barges may not transit the bridge—

(i) During the period from one hour to five hours after high water slack,

(ii) When the wind speed at the bridge is greater than twenty knots, and

(iii) With the barge being towed on a hawser, stern first.

(4) Regulated barges with a beam greater than fifty feet must be pushed ahead through the bridge.

(5) If the tug operator does not have a clear view over the barge when pushing ahead, the operator shall post a lookout on the barge with a means of communication with the operator.

(6) Regulated barges departing the Mill River may transit the bridge only between sunrise and sunset. Barges must be pushed ahead of the tug, bow first, with a second tug standing by to assist at the bow.

(7) Nothing in this section is intended to relieve any person from complying with:

(i) Applicable Navigation and Pilot Rules for Inland Waters;

(ii) Any other laws or regulations;

(iii) Any order or direction of the Captain of the Port.

(8) The Captain of the Port Sector Long Island Sound (COTP) may issue an authorization to deviate from any regulation in paragraph (b) of this section if the COTP determines that an alternate operation can be done safely.

(9) The COTP may temporarily close the RNA for any situation the COTP

determines would create an imminent hazard to waterway users in the RNA. Entry into the RNA during temporary closure is prohibited unless authorized by the COTP or the COTP's designated representative. The COTP or designated representative may order the removal of any vessel or equipment within the RNA. To assure wide advance notice of each closure among affected mariners, the COTP may use means including, but not limited to, Broadcast Notice to Mariners and Local Notice to Mariners. The COTP will announce the dates and times of the closure and whether exceptions will be authorized for emergency or other specific vessel traffic.

[CGD 79–034, 47 FR 29660, July 8, 1982, as amended by CGD 80–069, 47 FR 53368, Nov. 26, 1982. Redesignated by CGD 87–008b, 52 FR 25218, July 6, 1987, as amended by USCG–2012–0343, 77 FR 67565, Nov. 13, 2012]

§ 165.151 Safety Zones; Fireworks Displays, Air Shows and Swim Events in the Captain of the Port Long Island Sound Zone.

(a) *Regulations.* (1) The general regulations contained in 33 CFR 165.23 as well as the following regulations apply to the fireworks displays, air shows, and swim events listed in Tables 1 and 2 to § 165.151.

(2) These regulations will be enforced for the duration of each event. Notifications will be made to the local maritime community through all appropriate means such as Local Notice to Mariners or Broadcast Notice to Mariners well in advance of the events. If the event does not have a date listed, then exact dates and times of the enforcement period will be announced through a Notice of Enforcement in the FEDERAL REGISTER. Mariners should consult the FEDERAL REGISTER or their Local Notice to Mariners to remain apprised of schedule or event changes. First Coast Guard District Local Notice to Mariners can be found at *http://www.navcen.uscg.gov/.*

(3) Although listed in the Code of Federal Regulations, sponsors of events listed in Tables 1 and 2 to § 165.151 are still required to submit marine event applications in accordance with 33 CFR 100.15. Each application must:

(i) Be submitted no less than 60 days before the date of the proposed event.

(ii) If the proposed event does not have a specified date the sponsor shall hold the event during the month it is listed in Tables 1 or 2 to § 165.151.

(iii) For those proposed events listed in Table 1 to § 165.151 to be held during the month of July, the event may take place during the final seven days of June.

(iv) Any proposed event not being held on the specified date or within the month listed in Tables 1 or 2 to § 165.151 shall be considered a new marine event and the sponsor shall submit a new marine event application in accordance with 33 CFR 100.15 no less than 135 days before the start of the event.

(b) *Definitions.* The following definitions apply to this section:

(1) *Designated representative.* A ''designated representative'' is any Coast Guard commissioned, warrant or petty officer of the U.S. Coast Guard who has been designated by the Captain of the Port (COTP), Sector Long Island Sound (LIS), to act on his or her behalf. The designated representative may be on an official patrol vessel or may be on shore and will communicate with vessels via VHF–FM radio or loudhailer. In addition, members of the Coast Guard Auxiliary may be present to inform vessel operators of this regulation.

(2) *Official patrol vessels.* Official patrol vessels may consist of any Coast Guard, Coast Guard Auxiliary, state, or local law enforcement vessels assigned or approved by the COTP.

(3) *Spectators.* All persons and vessels not registered with the event sponsor as participants or official patrol vessels.

(c) Vessel operators desiring to enter or operate within the regulated areas should contact the COTP at 203–468–4401 (Sector LIS command center) or the designated representative via VHF channel 16 to obtain permission to do so.

(d) Spectators or other vessels shall not anchor, block, loiter, or impede the transit of event participants or official patrol vessels in the regulated areas during the effective dates and times, or dates and times as modified through the Local Notice to Mariners, unless

authorized by COTP or designated representative.

(e) Upon being hailed by a U.S. Coast Guard vessel or the designated representative, by siren, radio, flashing light or other means, the operator of the vessel shall proceed as directed. Failure to comply with a lawful direction may result in expulsion from the area, citation for failure to comply, or both.

(f) The COTP or designated representative may delay or terminate any marine event in this subpart at any time it is deemed necessary to ensure the safety of life or property.

(g) The regulated area for all fireworks displays listed in Table 1 to § 165.151 is that area of navigable waters within a 1000 foot radius of the launch platform or launch site for each fireworks display, unless otherwise noted in Table 1 to § 165.151 or modified in USCG First District Local Notice to Mariners at: *http://www.navcen.uscg.gov/*.

(h) The regulated area for all air shows is the entire geographic area described as the location for that show unless otherwise noted in Table 1 to § 165.151 or modified in USCG First District Local Notice to Mariners at: *http://www.navcen.uscg.gov/*.

(i) Fireworks barges used in these locations will also have a sign on their port and starboard side labeled ''FIREWORKS—STAY AWAY''. This sign will consist of 10 inch high by 1.5 inch wide red lettering on a white background. Shore sites used in these locations will display a sign labeled ''FIREWORKS—STAY AWAY'' with the same dimensions. These zones will be enforced from 8:30 p.m. to 10:30 p.m. each day a barge with a ''FIREWORKS—STAY AWAY'' sign on the port and starboard side is on-scene or a ''FIREWORKS—STAY AWAY'' sign is posted in a location listed in Table 1 to § 165.151.

(j) For all swim events listed in Table 2 to § 165.151, vessels not associated with the event shall maintain a separation of at least 100 yards from the participants.

TABLE 1 TO § 165.151

2	February
2.1 Sag Harbor COC Winter Harbor Frost Fireworks	Date: A day during the first or second weekend of February from 6:15 p.m. until 6:45 p.m. Location: Waters of Sag Harbor off Long Wharf St. Pier in Sag Harbor, NY in approximate position 41°00′16.82″ N, 072°17′43.78″ W (NAD 83).
4	April
4.1 Bridgeport Bluefish April Fireworks	• Location: Waters of the Pequannock River's Lower Reach surrounding Steel Point in Bridgeport, CT in approximate position 41°10′35″ N 073°10′58″ W (NAD 83).
5	May
5.1 Jones Beach Air Show	• Date: The Thursday through Sunday before Memorial Day each May from 9:30 a.m. until 3:30 p.m. each day. • Location: Waters of Atlantic Ocean off Jones Beach State Park, Wantagh, NY. In approximate positions 40°34′54″ N, 073°33′21″ W, then running east along the shoreline of Jones Beach State Park to approximate position 40°35′49″ N, 073°28′47″ W; then running south to a position in the Atlantic Ocean off of Jones Beach at approximate position 40°33′15″ N, 073°33′09″ W; then running West to approximate position 40°35′05″ N, 073°28′34″ W; then running North to the point of origin. (NAD 83).

TABLE 1 TO § 165.151—Continued

5.2 Greenport Spring Fireworks	• Date: A day during the last week of May or First week of June. • Location: Waters of Greenport Harbor off Mitchell Park and Marina, Greenport, NY in approximate position 41°05′59.09″ N, 072°21′31.44″ W (NAD 83).
6	June
6.1 Barnum Festival Fireworks	• Date: last Saturday in June • Rain Date: following Saturday • Time: 8:30 p.m. to 10:30 p.m. • Location: Waters of Bridgeport Harbor, Bridgeport, CT in approximate position 41°9′04″ N, 073°12′49″ W (NAD 83).
6.2 Town of Branford Fireworks	• Location: Waters of Branford Harbor, Branford, CT in approximate position, 41°15′30″ N, 072°49′22″ W (NAD 83).
6.3 Vietnam Veterans/Town of East Haven Fireworks	• Location: Waters off Cosey beach, East Haven, CT in approximate position, 41°14′19″ N, 072°52′9.8″ W (NAD 83).
6.4 Salute to Veterans Fireworks	• Date: The third Saturday of June. • Rain date: The fourth Saturday of June. • Location: Waters of Reynolds Channel off Hempstead, NY in approximate position 40°35′36.62″ N, 073°35′20.72″ W (NAD 83).
6.5 Cherry Grove Arts Project Fireworks	• Date: A single day during the first two weeks of June.
	• Location: Waters of the Great South Bay off Cherry Grove, NY in approximate position 40°39′49.06″ N, 073°05′27.99″ W (NAD 83).
6.6 Bridgeport Bluefish June Fireworks	• Location: Waters of the Pequannock River's Lower Reach surrounding Steel Point in Bridgeport, CT in approximate position 41°10′35″ N, 073°10′58″ W (NAD 83).
7	July
7.1 Point O'Woods Fire Company Summer Fireworks	• Location: Waters of the Great South Bay, Point O'Woods, NY in approximate position 40°39′18.57″ N, 073°08′5.73″ W (NAD 83).
7.2 Cancer Center for Kids Fireworks	• Location: Waters off of Bayville, NY in approximate position 40°54′38.20″ N, 073°34′56.88″ W (NAD 83).
7.3 City of Westbrook, CT July Celebration Fireworks	• Location: Waters of Westbrook Harbor, Westbrook, CT in approximate position, 41°16′10.50″ N, 072°26′14″ W (NAD 83).
7.4 Norwalk Fireworks	• Location: Waters off Calf Pasture Beach, Norwalk, CT in approximate position, 41°04′50″ N, 073°23′22″ W (NAD 83).
7.5 Lawrence Beach Club Fireworks	• Location: Waters of the Atlantic Ocean off Lawrence Beach Club, Atlantic Beach, NY in approximate position 40°34′42.65″ N, 073°42′56.02″ W (NAD 83).

TABLE 1 TO § 165.151—Continued

7.6 Sag Harbor Fireworks	• Location: Waters of Sag Harbor Bay off Havens Beach, Sag Harbor, NY in approximate position 41°00′26″ N, 072°17′9″ W (NAD 83).
7.7 South Hampton Fresh Air Home Fireworks	• Location: Waters of Shinnecock bay, Southampton, NY in approximate positions, 40°51′48″ N, 072°26′30″ W (NAD 83).
7.8 Westport Police Athletic league Fireworks	• Location: Waters off Compo Beach, Westport, CT in approximate position, 41°06′15″ N, 073°20′57″ W (NAD 83).
7.9 City of Middletown Fireworks	• Date: July 4. • Rain date: July 5. • Time: 8:30 p.m. to 10:30 p.m. • Location: Waters of the Connecticut River, Middletown Harbor, Middletown, CT in approximate position 41°33′44.47″ N, 072°38′37.88″ W (NAD 83).
7.10 City of New Haven Fireworks	• Date: July 4. • Rain date: July 5. • Time: 8:30 p.m. to 10:30 p.m. • Location: Waters of New Haven Harbor, off Long Warf Park, New Haven, CT in approximate position 41°17′24″ N, 072°54′55.8″ W (NAD 83).
7.11 City of Norwich July Fireworks	• Date: July 4. • Rain date: July 5. • Time: 8:30 p.m. to 10:30 p.m. • Location: Waters of the Thames River, Norwich, CT in approximate position, 41°31′16.835″ N, 072°04′43.327″ W (NAD 83).
7.12 City of Stamford Fireworks	• Date: July 4. • Rain date: July 5. • Time: 8:30 p.m. to 10:30 p.m. • Location: Waters of Fisher's Westcott cove, Stamford, CT in approximate position 41°02′09.56″ N, 073°30′57.76″ W (NAD 83).
7.13 City of West Haven Fireworks	• Date: July 4. • Rain date: July 5. • Time: 8:30 p.m. to 10:30 p.m. • Location: Waters of New Haven Harbor, off Bradley Point, West Haven, CT in approximate position 41°15′07″ N, 072°57′26″ W (NAD 83).
7.14 CDM Chamber of Commerce Annual Music Fest Fireworks.	• Date: July 4. • Rain date: July 5. • Time: 8:30 p.m. to 10:30 p.m. • Location: Waters off of Cedar Beach Town Park, Mount Sinai, NY in approximate position 40°57′59.58″ N, 073°01′57.87″ W (NAD 83).
7.15 Davis Park Fireworks	• Date: July 4. • Rain date: July 5. • Time: 8:30 p.m. to 10:30 p.m. • Location: Waters of the Great South Bay, Davis Park, NY in approximate position, 40°41′17″ N, 073°00′20″ W (NAD 83).
7.16 Fairfield Aerial Fireworks	• Date: July 4. • Rain date: July 5. • Time: 8:30 p.m. to 10:30 p.m.

TABLE 1 TO § 165.151—Continued

	• Location: Waters of Jennings Beach, Fairfield, CT in approximate position 41°08′22″ N, 073°14′02″ W (NAD 83).
7.17 Fund in the Sun Fireworks	• Date: July 4. • Rain date: July 5. • Time: 8:30 p.m. to 10:30 p.m. • Location: Waters of the Great South Bay off The Pines, East Fire Island, NY in approximate position 40°40′07.43″ N, 073°04′13.88″ W (NAD 83).
7.18 Independence Day Celebration Fireworks	• Date: July 4. • Rain date: July 5. • Time: 8:30 p.m. to 10:30 p.m. • Location: Waters off of Umbrella Beach, Montauk, NY in approximate position 41°01′44″ N, 071°57′13″ W (NAD 83).
7.19 Jones Beach State Park Fireworks	• Date: July 4. • Rain date: July 5. • Time: 8:30 p.m. to 10:30 p.m. • Location: Waters off of Jones Beach State Park, Wantagh, NY in approximate position 40°34′56.676″ N, 073°30′31.186″ W (NAD 83).
7.20 Madison Cultural Arts Fireworks	• Date: July 4. • Rain date: July 5. • Time: 8:30 p.m. to 10:30 p.m. • Location: Waters of Long Island Sound off of, Madison, CT in approximate position 41°16′10″ N, 072°36′30″ W (NAD 83).
7.21 Mason's Island Yacht Club Fireworks	• Date: July 4. • Rain date: July 5. • Time: 8:30 p.m. to 10:30 p.m. • Location: Waters of Fisher's Island Sound, Noank, CT in approximate position 41°19′30.61″ N, 071°57′48.22″ W (NAD 83).
7.22 Patchogue Chamber of Commerce Fireworks	• Date: July 4. • Rain date: July 5. • Time: 8:30 p.m. to 10:30 p.m. • Location: Waters of the Great South Bay, Patchogue, NY in approximate position, 40°44′38″ N, 073°00′33″ W (NAD 83).
7.23 Riverfest Fireworks	• Date: July 4. • Rain date: July 5. • Time: 8:30 p.m. to 10:30 p.m. • Location: Waters of the Connecticut River Hartford, CT in approximate positions, 41°45′39.93″ N, 072°39′49.14″ W (NAD 83).
7.24 Village of Asharoken Fireworks	• Date: July 4. • Rain date: July 5. • Time: 8:30 p.m. to 10:30 p.m. • Location: Waters of Northport Bay, Asharoken, NY in approximate position, 41°55′54.04″ N, 073°21′27.97″ W (NAD 83).
7.25 Village of Port Jefferson Fourth of July Celebration Fireworks.	• Date: July 4. • Rain date: July 5. • Time: 8:30 p.m. to 10:30 p.m.

TABLE 1 TO § 165.151—Continued

	• Location: Waters of Port Jefferson Harbor Port Jefferson, NY in approximate position 40°57′10.11″ N, 073°04′28.01″ W (NAD 83).
7.26 Village of Quoque Foundering Anniversary Fireworks.	• Date: July 4. • Rain date: July 5. • Time: 8:30 p.m. to 10:30 p.m. • Location: Waters of Quantuck Bay, Quoque, NY in approximate position 40°48′42.99″ N, 072°37′20.20″ W (NAD 83).
7.27 City of Long Beach Fireworks	• Location: Waters off Riverside Blvd, City of Long Beach, NY in approximate position 40°34′38.77″ N, 073°39′41.32″ W (NAD 83).
7.28 Great South Bay Music Festival Fireworks	• Location: Waters of Great South Bay, off Bay Avenue, Patchogue, NY in approximate position 40°44′45″ N, 073°00′25″ W (NAD 83).
7.29 Mashantucket Pequot Fireworks	• Location: Waters of the Thames River New London, CT in approximate positions Barge 1, 41°21′03.03″ N, 072°5′24.5″ W Barge 2, 41°20′51.75″ N, 072°5′18.90″ W (NAD 83).
7.30 Shelter Island Fireworks	• Location: Waters of Gardiner Bay, Shelter Island, NY in approximate position 41°04′39.11″ N, 072°22′01.07″ W (NAD 83).
7.31 Clam Shell Foundation Fireworks	• Location: Waters of Three Mile Harbor, East Hampton, NY in approximate position 41°1′15.49″ N, 072°11′27.50″ W (NAD 83).
7.32 Town of North Hempstead Bar Beach Fireworks	• Location: Waters of Hempstead Harbor, North Hempstead, NY in approximate position 40°49′54″ N, 073°39′14″ W (NAD 83).
7.33 Groton Long Point Yacht Club Fireworks	• Location: Waters of Long Island Sound, Groton, CT in approximate position 41°18′05″ N, 072°02′08″ W (NAD 83).
7.34 Devon Yacht Club Fireworks	• Date: A day during the first week of July. • Location: Waters of Napeague Bay, in Block Island Sound off Amagansett, NY in approximate position 40°59′41.40″ N, 072°06′08.70″ W (NAD 83).
7.35 Dolan Family Fourth Fireworks	• Date: July 4. • Rain date: July 5. • Location: Waters of Oyster Bay Harbor in Long Island Sound off Oyster Bay, NY in approximate position 40°53′42.50″ N, 073°30′04.30″ W (NAD 83).
7.36 Friar's Head Golf Club Fireworks	• Date: A day during the first two weeks of July. • Location: Waters of Long Island Sound off Baiting Hollow, NY in approximate position, 40°58′19.53″ N, 072°43′45.65″ W (NAD 83).
7.37 Islip Fireworks	• Date: July 4. • Rain date July 5. • Location: Waters of the Great South Bay off Bay Shore Manor Park, Islip, NY in approximate position 40°42′24″ N, 073°14′24″ W (NAD 83).
7.38 Madison Fireworks	• Date: July 4. • Rain date: The Saturday following July 4.

TABLE 1 TO § 165.151—Continued

	• Location: Waters of Long Island Sound off Madison Beach, Madison, CT in approximate position 41°16′03.93″ N, 072°36′15.97″ W (NAD 83).
7.39 Stratford Fireworks	• Date: July 3. • Rain date: July 5. • Location: Waters of Long Island Sound surrounding Short Beach Park, Stratford, CT in approximate position 41°09′50.82″ N, 073°06′47.13″ W (NAD 83).
7.40 Rowayton Fireworks	• Date: July 4. • Rain date: July 5. • Location: Waters of Long Island Sound south of Bayley Beach Park in Rowayton, CT in approximate position 41°03′11″ N, 073°26′41″ W (NAD 83).
7.41 Niantic Bay Fireworks	• Date: A day during the first three weeks of July. • Location: Waters of Niantic Bay 1500 feet west of the Niantic River Railroad Bridge, Niantic, CT in approximate position 41°19′22.59″ N, 072°11′03.47″ W (NAD 83).
7.42 Connetquot River Summer Fireworks	• Date: A day during the first Week of July. • Location: Waters of the Connetquot River off Snapper Inn Restaurant, Oakdale, NY in approximate position 40°43′32.38″ N, 073°9′02.64″ W (NAD 83).
7.43 North Bay Fourth of July Fireworks	• Date: July, 4. • Rain Date: July, 5. • Location: Waters of the Great South Bay in Patchogue Bay 4000 feet south east of Blue Point, NY in approximate position 40°44′6.28″ N, 073°01′02.50″ W (NAD 83).
7.44 National Golf Links Fireworks	• Date: A day during the first week of July. • Location: Waters of the Great Peconic Bay ¾ of a mile northwest of Bullhead Bay, Shinnecock, NY in approximate position 40°55′11.79″ N, 072°28′04.34″ W (NAD 83).
7.45 Xirinachs Family Foundation Fireworks	• Date: A day during the first two weekends of July. • Location: Waters of Hunting Bay off Beach Ave. Huntington Bay, NY in approximate position 40°54′23.27″ N, 73°25′08.04″ W (NAD 83).
7.46 Irwin family 4th of July	• Date: A day during the last week of June or first week of July. • Location: Waters of the Great South Bay off The Helm Rd. East Islip, NY in approximate position 40°42′12.28″ N, 73°12′00.08″ W (NAD 83).
7.47 Westbrook July Celebration	• Date: A day during the last week of June or first week of July. • Location: Water of Long Island Sound Westbrook Harbor, West Brook, CT in approximate position 41°16′10″ N, 72°26′14″ W (NAD 83).
7.48 Bridgeport Bluefish July Fireworks	• Location: Waters of the Pequannock River's Lower Reach surrounding Steel Point in Bridgeport, CT in approximate position 41°10′35″ N, 073°10′58″ W (NAD 83).

TABLE 1 TO § 165.151—Continued

8	August
8.1 Village of Bellport Fireworks	• Location: Waters of Bellport Bay, off Bellport Dock, Bellport, NY in approximate position 40°45′01.83″ N, 072°55′50.43″ W (NAD 83).
8.2 Taste of Italy Fireworks	• Location: Waters of Norwich Harbor, off Norwich marina, Norwich, CT in approximate position 41°31′17.72″ N, 072°04′43.41″ W (NAD 83).
8.3 Old Black Point Beach Association Fireworks	• Location: Waters off Old Black Point Beach East Lyme, CT in approximate position, 41°17′34.9″ N, 072°12′55″ W (NAD 83).
8.4 Town of Babylon Fireworks	• Location: Waters off of Cedar Beach Town Park, Babylon, NY in approximate position 40°37′53″ N, 073°20′12″ W (NAD 83).
8.5 Shelter Island Yacht Club Fireworks	• Date: The second Saturday of August. • Rain date: the second Sunday of August. • Location: Waters of Dering Harbor north of Shelter Island Yacht Club, Shelter Island, NY in approximate position 41°05′23.47″ N, 072°21′11.18″ W (NAD 83).
8.6 Stamford Fireworks	• Date: The last Saturday of August. • Rain date: The last Sunday of August. • Location: Waters of Stamford Harbor, off Kosciuszco Park, Stamford, CT in approximate position 41°01′48.46″ N, 073°32′15.32″ W (NAD 83).
8.7 Nikon Theater at Jones beach Fireworks	• Date: A day during the first two weeks of August. • Location: Waters of Zacks Bay off the Nikon Theater, Jones Beach, NY in approximate position 40°36′02.12″ N, 073°30′05.65″ W (NAD 83).
8.8 Ascension Fireworks	• Date: A day during the third or fourth weekend of August. • Location: Waters of the Great South Bay off The Pines, East Fire Island, NY in approximate position 40°40′07.43″ N, 073°04′13.88″ W (NAD 83).
8.9 Bridgeport Bluefish August Fireworks	• Location: Waters of the Pequannock River's Lower Reach surrounding Steel Point in Bridgeport, CT in approximate position 41°10′35″ N, 073°10′58″ W (NAD 83).
9	September
9.1 East Hampton Fire Department Fireworks	• Location: Waters off Main Beach, East Hampton, NY in approximate position 40°56′40.28″ N, 072°11′21.26″ W (NAD 83).
9.2 Town of Islip Labor Day Fireworks	• Location: Waters of Great South Bay off Bay Shore Marina, Islip, NY in approximate position 40°42′24″ N, 073°14′24″ W (NAD 83).
9.3 Village of Island Park Labor Day Celebration Fireworks.	• Location: Waters off Village of Island Park Fishing Pier, Village Beach, NY in approximate position 40°36′30.95″ N, 073°39′22.23″ W (NAD 83).
9.4 The Creek Fireworks	• Date: A day during the first week of September.

TABLE 1 TO § 165.151—Continued

	• Location: Waters of Long Island Sound off the Creek Golf Course, Lattingtown, NY in approximate position 40°54′13″ N, 073°35′58″ W (NAD 83).
9.5 Archangel Michael Greek Orthodox Church Fireworks.	• Date: A day during the last week of September or first week of October. • Location: Water of Hempstead Harbor off Bar Beach Town Park Port Washington, NY in approximate position 40°49′42″ N, 073°39′07″ W (NAD 83).
9.6 Port Washington Sons of Italy Fireworks	• Location: Waters of Hempstead Harbor off Bar Beach, North Hempstead, NY in approximate position 40°49′48.04″ N, 073°39′24.32″ W (NAD 83).
9.7 Bridgeport Bluefish September Fireworks	• Location: Waters of the Pequannock River's Lower Reach surrounding Steel Point in Bridgeport, CT in approximate position 41°10′35″ N, 073°10′58″ W (NAD 83).
11	November
11.1 Charles W. Morgan Anniversary Fireworks	• Date: A day during the first or second weekend of November. • Location: Waters of the Mystic River, north of the Mystic Seaport Light, Mystic, CT in approximate position 41°21′56.455″ N, 071°57′58.32″ W (NAD 83).
11.2 Christmas Boat Parade Fireworks	• Location: Waters of Patchogue Bay off ''Lombardi's on the Bay'' restaurant Patchogue, NY in approximate position 40°44′39.18″ N 073°00′37.80″ W (NAD 83).
11.3 Connetquot River Fall Fireworks	• Location: Waters of the Connetquot River off Snapper Inn Restaurant, Oakdale, NY in approximate position 40°43′32.38″ N, 073°09′02.64″ W (NAD 83).
12	December
12.1 Greenport Winter Fireworks	• Date: From 11:45 p.m. December 31, until 12:30 a.m. January 1. • Location: Waters of Greenport Harbor off Mitchell Park and Marina, Greenport NY, in approximate position 41°05′59.09″ N 072°21′31.44″ W (NAD 83).

TABLE 2 TO § 165.151

[June, July & August]

1.1 Swim Across the Sound	• Location: Waters of Long Island Sound, Port Jefferson, NY to Captain's Cove Seaport, Bridgeport, CT. in approximate positions 40°58′11.71″ N, 073°05′51.12″ W, north-westerly to the finishing point at Captain's Cove Seaport 41°09′25.07″ N, 073°12′47.82″ W (NAD 83).

TABLE 2 TO § 165.151—Continued

[June, July & August]

1.2 Huntington Bay Open Water Championships Swim.	• Location: Waters of Huntington Bay, NY. In approximate positions start/finish at approximate position 40°54′25.8″ N, 073°24′28.8″ W, East turn at approximate position 40°54′45″ N 073°23′36.6″ W and a West turn at approximate position 40°54′31.2″ N, 073°25′21″ W, °09′25.07″ N 073°12′47.82″ W (NAD 83).
1.3 Maggie Fischer Memorial Great South Bay Cross Bay Swim.	• Location: Waters of the Great South Bay, NY. Starting Point at the Fire Island Lighthouse Dock in approximate position 40°38′01″ N, 073°13′07″ W; northerly through approximate points 40°38′52″ N, 073°13′09″ W; 40°39′40″ N, 073°13′30″ W; 40°40′30″ N, 073°14′00″ W; and finishing at Gilbert Park, Brightwaters, NY at approximate position 40°42′25″ N, 073°14′52″ W (NAD 83).
1.4 Waves of Hope Swim	• Date: A day during the last week of June or first two weeks of July. • Time: 8 a.m. until 1 p.m. • Location: All waters of the Great South Bay off Amityville, NY shoreward of a line created by connecting the following points. Beginning at 40°39′22.38″ N, 073°25′31.63″ W, then to 40°39′02.18″ N, 073°25′31.63″ W, then to 40°39′02.18″ N, 073°24′03.81″ W, ending at 40°39′18.27″ N, 073°24′03.81″ W (NAD 83).
1.5 Stonewall Swim	• Date: A day during a weekend in August. • Time: 8:30 a.m. until 12:30 p.m. • Location: All navigable waters of the Great South Bay within a three miles long and half mile wide box connecting Snedecor Avenue in Bayport, NY to Porgie Walk in Fire Island, NY. Formed by connecting the following points. Beginning at 40°43′40.24″ N, 073°03′41.50″ W; then to 40°43′40.00″ N, 073°03′13.40″ W; then to 40°40′04.13 N, 073°03′43.81″ W; then to 40°40′08.30″ N, 073°03′17.70″ W; and ending at the beginning point 40°43′40.24″ N, 073°03′41.5″ W (NAD 83).
1.6 Swim Across America Greenwich	• Date: A single day during June. • Time: 5:30 a.m. until noon. • Location: All navigable waters of Stamford Harbor within a half miles long and 1000 foot wide polygon shaped box stretching from Dolphin Cove to Rocky Point between Stamford and Greenwich, CT. Formed by connecting the following points. Beginning at point (A) 41°01′32.03″ N, 073°33′8.93″ W, then south east to point (B) 41°01′15.01″ N, 073°32′55.58″ W; then south west to point (c) 41°00′49.25N, 073°33′20.36″ W; then north west to point (D) 41°00′58.00″ N, 073°33′27.00″ W, then north east to point (E) 41°01′15.80″ N, 073°33′09.85″ W, then heading north and ending at point (A)(NAD 83).
1.7 US Coast Guard Triathlon Swim	• Date: A single day during August.

TABLE 2 TO § 165.151—Continued

[June, July & August]

	• Location: All navigable waters of the Thames River, New London Harbor off Fort Trumbull State Park around a half mile long course that is west of the Federal navigation channel in New London, CT. Formed by connecting the following points. Beginning at point (A) 41°20′40.03″ N, 072°05′32.15″ W; then east to point (B) 41°20′40.08″ N, 072°05′22.03″ W, then north to point (C) 41°20′48.29N, 072°05′23.19″ W; then north west to point (D) 41°20′50.84″ N, 072°05′29.29″ W, then south west to end point (E) 41°20′46.41″ N, 072°05′35.77″ W, (NAD 83).

[USCG–2008–0384, 77 FR 6958, Feb. 10, 2012, as amended by USCG–2012–1036, 78 FR 31406, May 24, 2013]

§ 165.153 Regulated Navigation Area: Long Island Sound Marine Inspection and Captain of the Port Zone.

(a) *Regulated Navigation Area location*. All waters of the Long Island Sound Marine Inspection and Captain of the Port (COTP) Zone, as delineated in 33 CFR 3.05–35, extending seaward 12 nautical miles from the territorial sea baseline, are established as a regulated navigation area (RNA).

(b) *Applicability*. This section applies to all vessels operating within the RNA excluding public vessels.

(c) *Definitions*. The following definitions apply to this section:

Commercial service means any type of trade or business involving the transportation of goods or individuals, except service performed by a combatant vessel.

Ferry means a vessel that:

(1) Operates in other than ocean or coastwise service;

(2) Has provisions only for deck passengers or vehicles, or both;

(3) Operates on a short run on a frequent schedule between two points over the most direct water route; and

(4) Offers a public service of a type normally attributed to a bridge or tunnel.

Public vessels means vessels owned or bareboat chartered and operated by the United States, or by a State or political subdivision thereof, or by a foreign nation, except when such vessel is engaged in commercial service.

Territorial sea baseline means the line defining the shoreward extent of the territorial sea of the United States drawn according to the principles, as recognized by the United States, of the Convention on the Territorial Sea and the Contiguous Zone, 15 U.S.T. 1606, and the 1982 United Nations Convention on the Law of the Sea (UNCLOS), 21 I.L.M. 1261. Normally, the territorial sea baseline is the mean low water line along the coast of the United States.

(d) *Regulations*. (1) Speed restrictions in the vicinity of Naval Submarine Base New London and Lower Thames River. Unless authorized by the Captain of the Port (COTP), vessels of 300 gross tons or more may not proceed at a speed in excess of eight knots in the Thames River from New London Harbor channel buoys 7 and 8 (Light List numbers 21875 and 21880 respectively) north through the upper limit of the Naval Submarine Base New London Restricted Area, as that area is specified in 33 CFR 334.75(a). The U.S. Navy and other Federal, State and municipal agencies may assist the U.S. Coast Guard in the enforcement of this rule.

(2) *Enhanced communications*. Vessels of 300 gross tons or more and all vessels engaged in towing barges must issue securité calls on marine band or Very High Frequency (VHF) radio channel 16 upon approach to the following locations:

(i) Inbound approach to Cerberus Shoal; and

(ii) Outbound approach to Race Rock Light (USCG Light List No. 19815).

(3) All vessels operating within the RNA that are bound for a port or place

located in the United States or that must transit the internal waters of the United States, must be inspected to the satisfaction of the U. S. Coast Guard, before entering waters within three nautical miles from the territorial sea baseline. Vessels awaiting inspection will be required to anchor in the manner directed by the COTP. This section does not apply to vessels operating exclusively within the Long Island Sound Marine Inspection and COTP Zone, vessels on a single voyage which depart from and return to the same port or place within the RNA, all towing vessels engaged in coastwise trade, vessels in innocent passage not bound for a port or place subject to the jurisdiction of the United States, and all vessels not engaged in commercial service whose last port of call was in the United States. Vessels requiring inspection by the COTP may contact the COTP via marine band or Very High Frequency (VHF) channel 16, telephone at (203) 468–4401, facsimile at (203) 468–4418, or letter addressed to Captain of the Port, Long Island Sound, 120 Woodward Ave., New Haven, CT 06512.

(4) All vessels operating within the RNA that are bound for a port or place located in the United States or that must transit the internal waters of the United States, must obtain authorization from the Captain of the Port (COTP) before entering waters within three nautical miles from the territorial sea baseline. Vessels awaiting COTP authorization to enter waters within three nautical miles from the territorial sea baseline will be required to anchor in the manner directed by the COTP. This section does not apply to vessels operating exclusively within the Long Island Sound Marine Inspection and COTP Zone, vessels on a single voyage which depart from and return to the same port or place within the RNA, all towing vessels engaged in coastwise trade, vessels in innocent passage not bound for a port or place subject to the jurisdiction of the United States, and all vessels not engaged in commercial service whose last port of call was in the United States. Vessels may request authorization from the COTP by contacting the COTP via marine band or Very High Frequency (VHF) channel 16, telephone at (203) 468–4401, facsimile at (203) 468–4418, or letter addressed to Captain of the Port, Long Island Sound, 120 Woodward Ave., New Haven, CT 06512.

(5) Vessels over 1,600 gross tons operating in the RNA within three nautical miles from the territorial sea baseline that are bound for a port or place located in the United States or that must transit the internal waters of the United States must receive authorization from the COTP prior to transiting or any intentional vessel movements, including, but not limited to, shifting berths, departing anchorage, or getting underway from a mooring. This section does not apply to vessels in innocent passage not bound for a port or place subject to the jurisdiction of the United States.

(6) *Ferry vessels.* Vessels of 300 gross tons or more are prohibited from entering all waters within a 1200-yard radius of any ferry vessel transiting in any portion of the Long Island Sound Marine Inspection and COTP Zone without first obtaining the express prior authorization of the ferry vessel operator, master, COTP, or the designated COTP on-scene patrol.

(7) *Vessels engaged in commercial service.* No vessel may enter within a 100-yard radius of any vessel engaged in commercial service while that vessel is transiting, moored, or berthed in any portion of the Long Island Sound Marine Inspection and COTP zone, without the express prior authorization of the vessel's operator, master, COTP, or the designated COTP on-scene representative.

(8) *Bridge foundations.* Any vessel operating beneath a bridge must make a direct, immediate and expeditious passage beneath the bridge while remaining within the navigable channel. No vessel may stop, moor, anchor or loiter beneath a bridge at any time. No vessel may approach within a 25-yard radius of any bridge foundation, support, stanchion, pier or abutment except as required for the direct, immediate and expeditious transit beneath a bridge.

(9) This section does not relieve any vessel from compliance with applicable navigation rules.

[CGD01–02–104, 68 FR 48802, Aug. 15, 2003, as amended by USCG–2006–24371, 74 FR 11213, Mar. 16, 2009]

§ 165.154 Safety and Security Zones; Captain of the Port Long Island Sound Zone Safety and Security Zones.

The following areas are designated safety and security zones:

(a) *Security zones.* (1) Dominion Millstone Nuclear Power Plant, Waterford, CT.

(i) All navigable waters of Long Island Sound, from surface to bottom, North and Northeast of a line running from Bay Point, at approximate position 41°18′34.20″ N, 072°10′24.60″ W, to Millstone Point at approximate position 41°18′15.00″ N, 072°9′57.60″ W (NAD 83).

(ii) All navigable waters of Long Island Sound, from surface to bottom, West of a line starting at 41°18′42″ N, 072°09′39″ W, running south to the Eastern most point of Fox Island at approximate position 41°18′24.11″ N, 072°09′39.73″ W (NAD 83).

(2) Electric Boat Shipyard, Groton, CT.

(i) *Location.* All navigable waters of the Thames River, from surface to bottom, West of the Electric Boat Corporation Shipyard enclosed by a line beginning at a point on the shoreline at 41°20′16″ N, 72°04′47″ W; then running West to 41°20′16″ N, 72°04′57″ W; then running North to 41°20′26″ N, 72°04′57″ W; then Northwest to 41°20′28.7″ N, 72°05′01.7″ W; then North-Northwest to 41°20′53.3″ N, 72°05′04.8″ W; then North-Northeast to 41°21′02.9″ N, 72°05′04.9″ W; then East to a point on shore at 41°21′02.9″ N, 72°04′58.2″ W (NAD 83).

(ii) *Application.* Sections 165.33(a), (e), (f) shall not apply to public vessels or to vessels owned by, under hire to, or performing work for the Electric Boat Division when operating in the security zone.

(3) Naval Submarine Base, Groton, CT. All navigable waters of the Thames River, from surface to bottom, West of the Groton Naval Submarine Base New London, enclosed by a line beginning at a point on the shoreline at 41°23′15.8″ N, 72°05′17.9″ W; then to 41°23′15.8″ N, 72°05′22″ W; then to 41°23′25.9″ N, 72°05′29.9″ W; then to 41°23′33.8″ N, 72°05′34.7″ W; then to 41°23′37.0″ N, 72°05′38.0″ W; then to 41°23′41.0″ N, 72°05′40.3″ W; then to 41°23′47.2″ N, 72°05′42.3″ W; then to 41°23′53.8″ N, 72°05′43.7″ W; then to 41°23′59.8″ N, 72°05′43.0″ W; then to 41°24′12.4″ N, 72°05′43.2″ W; then to a point on the shoreline at 41°24′14.4″ N, 72°05′38″ W; then along the shoreline to the point of beginning (NAD 83).

(4) U.S. Coast Guard Academy, New London, CT.

(i) *Location.* All navigable waters of the Thames River, from surface to bottom, in a 500-yard radius from Jacobs Rock, approximate position 41°22′22″ N, 072°05′40″ W (NAD 83).

(ii) *Enforcement period.* This rule will be enforced during visits by high-ranking officials and times of heighted security.

(iii) *Notification.* The Captain of the Port will notify the maritime community of periods during which this security zone will be enforced by all appropriate means such as Local Notice to Mariners, Marine Safety Information Radio Broadcasts or on scene notice.

(5) U.S. Coast Guard Vessels, Long Island Sound COTP Zone. All navigable waters within a 100-yard radius of any anchored U.S. Coast Guard vessel. For the purposes of this section, U.S. Coast Guard vessels includes any commissioned vessel or small boat in the service of the regular U.S. Coast Guard and does not include Coast Guard Auxiliary vessels.

(b) *Safety zones.* (1) Coast Guard Station Fire Island, Long Island, NY. All waters of Fire Island Inlet from the shore out to a line beginning at a point on shore at 40°37′31.4″ N, 073°15′41.1″ W; then North to 40°37′35.6″ N, 073°15′43.1″ W; then East to 40°37′36.7″ N, 073°15′39.8″ W; then East to 40°37′37.8″ N, 073°15′36.6″ W; then East to 40°37′41.1″ N, 073°15′33.5″ W; then Southeast to 40°37′39.7″ N, 073°15′27.0″ W; then Southeast to 40°37′37.5″ N, 073°15′22.1″ W; then Southeast to 40°37′37.6″ N, 073°15′19.1″ W; then Southeast to point on shore at 40°37′33.9″ N, 073°15′20.8″ W (NAD 83).

(2) [Reserved]

(c) *Regulations.* (1) The general regulations contained in § 165.23 and § 165.33 of this part apply. Entering into, remaining within or cause an article or thing to enter into or remain within these safety and security zones is prohibited unless authorized by the Captain of the Port or a designated representative.

(2) These safety and security zones are closed to all vessel traffic, except as may be permitted by the Captain of the Port (COTP) or a designated representative. Vessel operators given permission to enter or operate in the security zones must comply with all directions given to them by the COTP or the designated representative.

(3) The ''designated representative'' is any Coast Guard commissioned, warrant or petty officer who has been designated by the Captain of the Port to act on his/her behalf. The on-scene representative may be on a Coast Guard vessel, a state or local law enforcement vessel, or other designated craft, or may be on shore and will communicate with vessels via VHF–FM radio or loudhailer. In addition, members of the Coast Guard Auxiliary may be present to inform vessel operators of this regulation.

(4) Vessel operators desiring to enter or operate within the security zones shall request permission to do so by contacting the Captain of the Port Sector Long Island Sound at 203–468–4401, or via VHF Channel 16.

[USCG–2008–0384, 77 FR 6961, Feb. 10, 2012]

§ 165.156 Regulated Navigation Area: East Rockaway Inlet to Atlantic Beach Bridge, Nassau County, Long Island, New York.

(a) *Location.* The following area is a Regulated Navigation Area: All waters of East Rockaway Inlet in an area bounded by lines drawn from position 40°34′56″ N, 073°45′19″ W, (approximate position of Silver Point breakwater buoy, LLNR 31500) running north to a point of land on the northwest side of the inlet at position 40°35′28″ N, 073°46′12″ W, thence easterly along the shore to the east side of the Atlantic Beach Bridge, State Route 878, over East Rockaway Inlet, thence across the bridge to the south side of East Rockaway Inlet, thence westerly along the shore and across the water to the beginning.

(b) *Regulations.* (1) The general regulations contained in 33 CFR 165.10, 165.11, and 165.13 apply.

(2) In accordance with the general regulations, the following regulations apply to vessels carrying petroleum products in excess of 250 barrels:

(i) The vessel must have plans in place to maintain a minimum of two feet under keel clearance at all times.

(ii) A vessel requiring a nighttime transit through East Rockaway Inlet may only do so only after receiving approval from the Captain of the Port Long Island Sound.

(iii) Vessels are prohibited from transiting East Rockaway Inlet if a small craft advisory or greater has been issued for the area unless specific approval is received from the Captain of the Port Long Island Sound.

(iv) In an emergency, any vessel may deviate from the regulations in this section to the extent necessary to avoid endangering the safety of persons, the environment, and or property. If deviation from the regulations is necessary, the master or their designee shall inform the Coast Guard as soon as it is practicable to do so.

(c) *Waivers.* (1) The Captain of the Port Long Island Sound may, upon request, waive any regulation in this section.

(2) An application for a waiver must state the need for the waiver and describe the proposed vessel operations through the Regulated Navigation Area.

[USCG–2008–0085, 74 FR 57887, Nov. 10, 2009]

§ 165.160 Safety Zones; fireworks displays and swim events in Coast Guard Captain of the Port New York Zone.

(a) *Regulations.* The general regulations contained in 33 CFR 165.23 as well as the following regulations apply to the fireworks displays and swim events listed in Tables 1 and 2 to § 165.160. These regulations will be enforced for the duration of each event. Notifications will be made to the local maritime community through the Local Notice to Mariners and Broadcast Notice to Mariners well in advance of the events. If the event does not have a date listed, then exact dates and times of the enforcement period will be announced through a Notice of Enforcement in the FEDERAL REGISTER. Mariners should consult the FEDERAL REGISTER or their Local Notice to Mariners to remain apprised of schedule or event changes. First Coast Guard District Local Notice to Mariners can be found

at *http://www.navcen.uscg.gov/*. The Captain of the Port Sector New York Marine Events schedule can also be viewed electronically at *www.homeport.uscg.mil*/newyork. Although listed in the Code of Federal Regulations, sponsors of events listed in Tables 1 and 2 to § 165.160 are still required to submit marine event applications in accordance with 33 CFR 100.15.

(b) *Definitions*. The following definitions apply to this section:

(1) *Designated representative*. A ''designated representative'' is any Coast Guard commissioned, warrant or petty officer of the U.S. Coast Guard who has been designated by the Captain of the Port, Sector New York (COTP), to act on his or her behalf. The designated representative may be on an official patrol vessel or may be on shore and will communicate with vessels via VHF–FM radio or loudhailer. In addition, members of the Coast Guard Auxiliary may be present to inform vessel operators of this regulation.

(2) *Official patrol vessels*. Official patrol vessels may consist of any Coast Guard, Coast Guard Auxiliary, state, or local law enforcement vessels assigned or approved by the COTP.

(3) *Spectators*. All persons and vessels not registered with the event sponsor as participants or official patrol vessels.

(b) Vessel operators desiring to enter or operate within the regulated areas shall contact the COTP or the designated representative via VHF channel 16 or (718) 354–4353 (Sector New York command center) to obtain permission to do so.

(c) Spectators or other vessels shall not anchor, block, loiter, or impede the transit of event participants or official patrol vessels in the regulated areas during the effective dates and times, or dates and times as modified through the Local Notice to Mariners, unless authorized by COTP or designated representative.

(d) Upon being hailed by a U.S. Coast Guard vessel or the designated representative, by siren, radio, flashing light or other means, the operator of the vessel shall proceed as directed. Failure to comply with a lawful direction may result in expulsion from the area, citation for failure to comply, or both.

(e) The COTP or designated representative may delay or terminate any marine event in this subpart at any time it is deemed necessary to ensure the safety of life or property.

(f) The regulated area for all fireworks displays listed in Table 1 to § 165.160 is that area of navigable waters within a 360 yard radius of the launch platform or launch site for each fireworks display, unless otherwise noted in TABLE 1 to § 165.160 or modified in USCG First District Local Notice to Mariners at: *http://www.navcen.uscg.gov/*.

(g) Fireworks barges used in these locations will also have a sign on their port and starboard side labeled ''Fireworks—Stay Away''. This sign will consist of 10 inch high by 1.5 inch wide red lettering on a white background. Shore sites used in these locations will display a sign labeled ''Fireworks—Stay Away'' with the same dimensions. These zones will be enforced from 6 p.m. (E.S.T.) to 1 a.m. (E.S.T.) each day a barge with a ''Fireworks—Stay Away'' sign on the port and starboard side is on-scene or a ''Fireworks—Stay Away'' sign is posted in a location listed in TABLE 1 to § 165.160.

(h) For all swim events listed in Table 2 to § 165.160, vessels not associated with the event shall maintain a separation of at least 100 yards from the participants.

TABLE 1 TO § 165.160

1.0	Hudson River
1.1 Macy's 4th of July Fireworks	• Event Type: Fireworks. • Date: July 4th. • Rain Date: July 5th.

TABLE 1 TO § 165.160—Continued

	• Location: All waters of the Hudson River bounded by a line drawn east from approximate position 40°46′35.43″ N, 074°00′37.53″ W in New Jersey, to approximate position 40°46′16.98″ N, 073°59′52.34″ W in New York, thence south along the Manhattan shoreline to approximate position 40°44′48.98″ N, 074°00′41.06″ W, then west to approximate position 40°44′55.91″ N, 074°01′24.94″ W, (NAD 83). Then north along the New Jersey shoreline and back to the point of origin.
2.0	New York Harbor
2.1 Liberty Island Safety Zone	• Launch site: A barge located in approximate position 40°41′16.5″ N 074°02′23″ W (NAD 1983), located in Federal Anchorage 20–C, about 360 yards east of Liberty Island. This Safety Zone is a 360-yard radius from the barge.
2.2 Ellis Island Safety Zone	• Launch site: A barge located between Federal Anchorages 20–A and 20–B, in approximate position 40°41′45″ N 074°02′09″ W (NAD 1983) about 365 yards east of Ellis Island. This Safety Zone is a 360-yard radius from the barge.
2.3 South Ellis Island Safety Zone	• Launch site: A barge located in approximate position 40°41′39.9″ N 074°02′33.7″ W (NAD 1983), about 260 yards south of Ellis Island. This Safety Zone is a 240-yard radius from the barge.
2.4 South Beach, Staten Island Safety Zone ..	• Launch site: A barge located in approximate position 40°35′11″ N 074°03′42″ W (NAD 1983), about 350 yards east of South Beach, Staten Island. This Safety Zone is a 360-yard radius from the barge.
2.5 Raritan Bay Safety Zone	• Launch site: A barge located in approximate position 40°30′04″ N 074°15′35″ W (NAD 1983), about 240 yards east of Raritan River Cutoff Channel Buoy 2 (LLNR 36595). This Safety Zone is a 240-yard radius from the barge.
2.6 Coney Island Safety Zone	• Launch site: A land shoot from the south end of Steeplechase Pier, Coney Island in approximate position 40°34′11″ N 073°59′00″ W (NAD 1983). This Safety Zone is a 250-yard radius from the launch site.

TABLE 1 TO § 165.160—Continued

2.7 Arthur Kill, Elizabeth, NJ Safety Zone	• Launch site: A land shoot located in Elizabeth, New Jersey in approximate position 40°38′50″ N 074°10′58″ W (NAD 1983), about 675 yards west of Arthur Kill Channel Buoy 20 (LLNR 36780). This Safety Zone is a 150-yard radius from the launch site.
2.8 Rockaway Beach Safety Zone	• Launch site: A barge located in approximate position 40°34′28.2″ N 073°50′00″ W (NAD 1983), 350 yards off of Beach 116th Street. This Safety Zone is a 360-yard radius from the barge.
2.9 Rockaway Inlet Safety Zone	• Launch site: A barge located in approximate position 40°34′19.1″ N 073°54′43.5″ W (NAD 1983). 1200 yards south of Point Breeze. This Safety Zone is a 360-yard radius from the barge.
2.10 Pierhead Channel, NJ Safety Zone	• Launch site: A barge located in approximate position 40°39′18.8″ N 074°04′39.1 W (NAD 1983), approximately 350 yards north of the Kill Van Kull Channel. This Safety Zone is a 360-yard radius from the barge.
2.11 Midland Beach, Staten Island Safety Zone.	• Launch site: A barge located in approximate position 40°34′12″ N 074°04′29.6″ W (NAD 1983), approximately 800 yards southeast of Midland Beach. This Safety Zone is a 500-yard radius from the barge.
2.12 Wolfes Pond Park, Staten Island Safety Zone.	• Launch site: A barge located in approximate position 40°30′52.1″ N 074°10′58.8″ W (NAD 1983), approximately 540 yards east of Wolfe′s Pond Park. This Safety Zone is a 500-yard radius from the barge.
2.13 Ocean Breeze Fishing Pier, Staten Island Safety Zone.	• Launch site: A barge located in approximate position 40°34′46.3″ N 074°04′02.0″ W (NAD 1983), approximately 1150 yards west of Hoffman Island. This Safety Zone is a 360-yard radius from the barge.
2.14 Fort Hamilton Safety Zone	• Launch site: A barge located in approximate position 40°36′00″ N 074°01′42.5″ W (NAD 1983), approximately 1400 yards southeast of the Verrazano-Narrows Bridge. This Safety Zone is a 240-yard radius from the barge.
2.15 Liberty State Park Safety Zone	• Launch site: A barge located in approximate position 40°41′20.32″ N 074°03′29.35″ W (NAD 1983), approximately 334 yards south of Pier 7, Liberty State Park, Jersey City, New Jersey. This Safety Zone is a 240-yard radius from the barge.
3.0	Western Long Island Sound

TABLE 1 TO § 165.160—Continued

3.1 Peningo Neck, Western Long Island Sound safety zone.	• Launch site: A barge located in approximate position 40°56′21″ N 073°41′23″ W (NAD 1983), approximately 525 yards east of Milton Point, Peningo Neck, New York. This Safety Zone is a 300-yard radius from the barge.
3.2 Satans Toe, Western Long Island Sound Safety Zone.	• Launch Site: A barge located in approximate position 40°55′21″ N 073°43′41″ W (NAD 1983), approximately 635 yards northeast of Larchmont Harbor (East Entrance) Light 2 (LLNR 25720). This Safety Zone is a 360-yard radius from the barge.
3.3 Larchmont, NY, Western Long Island Sound Safety Zone.	• Launch site: A barge located in approximate position 40°54′45″ N 073°44′55″ W (NAD 1983), approximately 450 yards southwest of the entrance to Horseshoe Harbor. This Safety Zone is a 240-yard radius from the barge.
3.4 Manursing Island, Western Long Island Sound Safety Zone.	• Launch site: A barge located in approximate position 40°57′47″ N 073°40′06″ W (NAD 1983), approximately 380 yards north of Rye Beach Transport Rock Buoy 2 (LLNR 25570). This Safety Zone is a 360-yard radius from the barge.
3.5 Glen Island, Western Long Island Sound Safety Zone.	• Launch site: A barge located in approximate position 40°53′12″ N 073°46′33″ W (NAD 1983), approximately 350 yards east of the northeast corner of Glen Island, New York. This Safety Zone is a 240-yard radius from the barge.
3.6 Twin Island, Western Long Island Sound Safety Zone.	• Launch site: A land shoot located on the east end of Orchard Beach, New York in approximate position 40°52′10″ N 073°47′07″ W (NAD 1983). This Safety Zone is a 200-yard radius from the launch site.
3.7 Davenport Neck, Western Long Island Sound Safety Zone.	• Launch site: A barge located in Federal Anchorage 1–A in approximate position 40°53′46″ N 073°46′04″ W (NAD 1983), approximately 360 yards north of Emerald Rock Buoy (LLNR 25810). This Safety Zone is a 360-yard radius from the barge.
3.8 Glen Cove, Hempstead Harbor Safety Zone.	• Launch site: A barge located in approximate position 40°51′58″ N 073°39′34″ W (NAD 1983), approximately 500 yards northeast of Glen Cove Breakwater Light 5 (LLNR 27065). This Safety Zone is a 360-yard radius from the barge.

TABLE 1 TO § 165.160—Continued

3.9 Bar Beach, Hempstead Harbor Safety Zone.	• Launch site: A barge located in approximate position 40°49′50″ N 073°39′12″ W (NAD 1983), approximately 190 yards north of Bar Beach, Hempstead Harbor, New York. This Safety Zone is a 180-yard radius from the barge.
3.10 Larchmont Harbor (north), Western Long Island Sound Safety Zone.	• Launch site: A barge located in approximate position 40°55′21.8″ N 073°44′21.7″ W (NAD 1983), approximately 560 yards north of Umbrella Rock. This Safety Zone is a 240-yard radius from the barge.
3.11 Orchard Beach, The Bronx Safety Zone	• Launch site: All waters of Long Island Sound in an area bound by the following points: 40°51′43.5″ N 073°47′36.3″ W; thence to 40°52′12.2″ N 073°47′13.6″ W; thence to 40°52′02.5″ N 073°46′47.8″ W; thence to 40°51′32.3″ N 073°47′09.9″ W (NAD 1983), thence to the point of origin.
3.12 Larchmont Harbor (south), Western Long Island Sound Safety Zone.	• Launch site: A barge located in approximate position 40°55′16″ N 073°44′15″ W (NAD 1983), approximately 440 yards north of Umbrella Rock, Larchmont Harbor, New York. This Safety Zone is a 240-yard radius from the barge.
3.13 Sands Point Western Long Island Sound Safety Zone.	• Launch site: A barge located in approximate position 40°52′03″ N 073°43′39″ W (NAD 1983), northeast of Hart Island, in the vicinity of Sands Point, New York. This Safety Zone is a 180-yard radius from the barge.
3.14 Echo Bay, Western Long Island Sound Safety Zone.	• Launch site: A shore launch located in approximate position 40°54′34.41″ N 073°45′56.61″ W (NAD 1983), southeast portion of Harrison Island, New York. This Safety Zone is a 180-yard radius from the barge.
4.0	East River
4.1 Wards Island, East River Safety Zone	• Launch site: A barge located in approximate position 40°46′57.8″ N 073°55′28.6″ W (NAD 1983), approximately 330 yards north of the Robert F. Kennedy Bridge (Triborough Bridge) Bridge. This Safety Zone is a 150-yard radius from the barge.
4.2 Newtown Creek, East River Safety Zone	• Launch site: A barge located in approximate position 40°′44″ 24 N 073°58′00″ W (NAD 1983), approximately 785 yards south of Belmont Island. This Safety Zone is a 360-yard radius from the barge.

TABLE 1 TO § 165.160—Continued

4.3 Corlears, East River Safety Zone	• Launch site: A barge located in approximate position 40°42′34.53″ N 073°58′33.37″ W (NAD 1983), approximately 570 yards south of the Williamsburg Bridge, 250 yards west of Railroad Avenue, Corlears Hook, New York. This Safety Zone is a 180-yard radius from the barge.
4.4 Seaport, East River Safety Zone	• Launch site: All waters of the East River south of the Brooklyn Bridge and north of a line drawn from the southwest corner of Pier 3, Brooklyn, to the southeast corner of Pier 6, Manhattan.
5.0	Hudson River
5.1 Pier 60, Hudson River Safety Zone	• Launch site: A barge located in approximate position 40°44′49″ N 074°01′02″ W (NAD 1983), approximately 500 yards west of Pier 60, Manhattan, New York. This Safety Zone is a 360-yard radius from the barge.
5.2 The Battery, Hudson River Safety Zone ...	• Launch site: A barge located in approximate position 40°42′00″ N 074°01′17″ W (NAD 1983), approximately 500 yards south of The Battery, Manhattan, New York. This Safety Zone is a 360-yard radius from the barge.
5.3 Battery Park City, Hudson River Safety Zone.	• Launch site: A barge located in approximate position 40°42′39″ N 074°01′21″ W (NAD 1983), approximately 480 yard southwest of North Cove Yacht Harbor, Manhattan, New York. This Safety Zone is a 360-yard radius from the barge.
5.4 Pier 90, Hudson River Safety Zone	• Launch site: A barge located in approximate position 40°46′11.8″ N 074°00′14.8″ W (NAD 1983), approximately 375 yards west of Pier 90, Manhattan, New York. This Safety Zone is a 360-yard radius from the barge.
5.5 Yonkers, NY, Hudson River Safety Zone	• Launch site: A barge located in approximate position 40°56′14.5″ N 073°54′33″ W (NAD 1983), approximately 475 yards northwest of the Yonkers Municipal Pier, New York. This Safety Zone is a 360-yard radius from the barge.
5.6 Hastings-on-Hudson, Hudson River Safety Zone.	• Launch site: A barge located in approximate position 40°59′44.5″ N 073°53′28″ W (NAD 1983), approximately 425 yards west of Hastings-on-Hudson, New York. This Safety Zone is a 360-yard radius from the barge.

TABLE 1 TO § 165.160—Continued

5.7 Pier D, Hudson River Safety Zone	• Launch site: A barge located in approximate position 40°42′57.5″ N 074°01′34″ W (NAD 1983), approximately 375 yards southeast of Pier D, Jersey City, New Jersey. This Safety Zone is a 360-yard radius from the barge.
5.8 Pier 54, Hudson River Safety Zone	• Launch site: A barge located in approximate position 40°44′31″ N 074°01′00″ W (NAD 1983), approximately 380 yards west of Pier 54, Manhattan, New York. This Safety Zone is a 360-yard radius from the barge.
5.9 Pier 84, Hudson River Safety Zone	• Launch site: A barge located in approximate position 40°45′56.9″ N 074°00′25.4″ W (NAD 1983), approximately 380 yards west of Pier 84, Manhattan, New York. This Safety Zone is a 360-yard radius from the barge.
5.10 Peekskill Bay, Hudson River Safety Zone.	• Launch site: A barge located in approximate position 41°17′16″ N 073°56′18″ W (NAD 1983), approximately 670 yards north of Travis Point. This Safety Zone is a 360-yard radius from the barge.
5.11 Jersey City, NJ, Hudson River Safety Zone.	• Launch site: A barge located in approximate position 40°42′37.3″ N 074°01′41.6″ W (NAD 1983), approximately 420 yards east of Morris Canal Little Basin. This Safety Zone is a 360-yard radius from the barge.
5.12 Newburgh, NY, Hudson River Safety Zone.	• Launch site: A barge located in approximate position 41°30′01.2″ N 073°59′42.5″ W (NAD 1983), approximately 930 yards east of Newburgh, New York. This Safety Zone is a 360-yard radius from the barge.
5.13 Poughkeepsie, NY, Hudson River Safety Zone.	• Launch site: A barge located in approximate position 41°42′24.50″ N 073°56′44.16″ W (NAD 1983), approximately 420 yards north of the Mid Hudson Bridge. This Safety Zone is a 300-yard radius from the barge.
5.14 Pier 40, Hudson River Safety Zone	• Launch site: A barge located in approximate position 40°43′30″ N 074°01′06.7″ W (NAD 1983), in the vicinity of the Holland Tunnel Ventilator, 530 yards south of Pier 40, Manhattan, New York. This Safety Zone is a 240-yard radius from the barge.
5.15 Fort Tryon Park, Hudson River Safety Zone.	• Launch site: A barge located in approximate position 40°51′52″ N 073°56′24″ W (NAD 1983), approximately 1750 yards north of the George Washington Bridge. This Safety Zone is a 180-yard radius from the barge.
6.0	Hutchinson River

TABLE 1 TO § 165.160—Continued

6.1 Bronx, NY Hutchinson River Safety Zone	• Launch site: A barge located in approximate position 40°52′31″ N 073°49′24″ W (NAD 1983). This Safety Zone is a 120-yard radius from the barge.
7.0	Navesink River
7.1 Keyport, NJ, Safety Zone	Launch site: A barge located in approximate position 40°26′24″ N 074°12′18″ W (NAD 1983), approximately 200 yards north of Keyport, NJ. This Safety Zone is a 150-yard radius from the barge.
7.2 Rumson, NJ, Safety Zone	• Launch site: A barge located in approximate position 40°22′39.1″ N 074°01′07.3″ W (NAD 1983), approximately 600 yards south of the Oceanic Bridge. This Safety Zone is a 300-yard radius from the barge.
7.3 Red Bank, NJ, Safety Zone	Launch site: A barge located in approximate position 40°21′20″ N 074°04′10″ W (NAD 1983), approximately 360 yards northwest of Red Bank, NJ. This Safety Zone is a 300-yard radius from the barge.

TABLE 2 TO § 165.160

1.0	Hudson River
1.1 Hudson Valley Triathlon	• Event Type: Swim Event • Date: The first weekend after the 4th of July. • The following area is a safety zone: All waters of the Hudson River in the vicinity of Ulster Landing, bound by the following points: 42°00′03.7″ N, 073°56′43.1″ W; thence to 41°59′52.5″ N, 073°56′34.2″ W thence to 42°00′15.1″ N, 073°56′25.2″ W thence to 42°00′05.4″ N, 073°56′41.9″ W thence along the shoreline to the point of beginning. • This Safety Zone includes all waters within a 100-yard radius of each participating swimmer.
1.2 Newburgh Beacon Swim	• Event Type: Swim Event. • Date: Last weekend in July. • Rain Date: The first weekend in August. • Location: Participants will cross the Hudson River between Newburgh and Beacon, New York approximately 1300 yards south of the Newburgh-Beacon Bridges. • This Safety Zone includes all waters within a 100-yard radius of each participating swimmer.
1.3 Hudson River Swim for Life	• Event Type: Swim Event.

TABLE 2 TO § 165.160—Continued

	• Date: 2nd weekend in September. • Location: Participants will cross the Hudson River in the vicinity of Nyack, New York between Lower Nyack Ledge and Kingsland Point, approximately 200 yards north of the Tappan Zee Bridge. • This Safety Zone includes all waters within a 100-yard radius of each participating swimmer.
1.4 Toughman Half Triathlon	• Event Type: Swim Event. • Date: 2nd weekend in September. • Location: Participants will swim in the vicinity of Croton Point Park, New York between Potato Rock and Harmon, New York from the shoreline out to 1000 yards. • This Safety Zone includes all waters within a 100-yard radius of each participating swimmer.
2.0	East River
2.1 Brooklyn Bridge Swim	• Event Type: Swim Event. • Date: 2nd or 3rd weekend in September. • Location: Participants will swim between Brooklyn and Manhattan, New York crossing the East River along the Brooklyn Bridge. • This Safety Zone includes all waters within a 100-yard radius of each participating swimmer.
3.0	Western Long Island Sound
3.1 Swim Across America	• Event Type: Swim Event. • Date: 4th weekend in July and 2nd weekend in August. • Location: Participants will swim between Glen Cove and Larchmont, New York and an area of Hempstead Harbor between Glen Cove and the vicinity of Umbrella Point. • This Safety Zone includes all waters within a 100-yard radius of each participating swimmer.
4.0	Upper New York Bay, Lower New York Bay
4.1 Ederle Swim	• Event Type: Swim Event. • Date: 2nd or 3rd weekend in October. • Location: Participants will swim between Manhattan, New York and the north shore of Sandy Hook, New Jersey transiting through the upper New York Bay, under the Verrazano-Narrows Bridge and across the Lower New York Bay. The route direction is determined by the predicted tide state and direction of current on the scheduled day of the event.

TABLE 2 TO § 165.160—Continued

4.2 Rose Pitonof Swim.	• This Safety Zone includes all waters within a 100-yard radius of each participating swimmer. • Event Type: Swim Event • Date: The 2nd weekend in August. • Location: Participants will swim between Manhattan, New York and the shore of Coney Island, New York transiting through the Upper New York Bay, under the Verrazano-Narrows Bridge and south in the Lower New York Bay. The route direction is determined by the predicted tide state and direction of current on the scheduled day of the event. • This Safety Zone includes all waters within a 100-yard radius of each participating swimmer.

[USCG–2010–1001, 76 FR 69617, Nov. 9, 2011]

§ 165.163 Safety Zones; Port of New York/New Jersey Fleet Week.

(a) The following areas are established as safety zones:

(1) *Safety Zone A*—(i) *Location.* A moving safety zone for the Parade of Ships including all waters 500 yards ahead and astern, and 200 yards of each side of the designated column of parade vessels as it transits the Port of New York and New Jersey from the Verrazano Narrows Bridge to Riverside State Park on the Hudson River between West 137th and West 144th Streets, Manhattan.

(ii) *Enforcement period.* Paragraph (a)(1)(i) of this section is enforced annually from 8 a.m. until 5 p.m. on the Wednesday before Memorial Day.

(2) *Safety Zone B*—(i) *Location.* A safety zone including all waters of the Hudson River between Piers 83 and 90, Manhattan, from the parade column east to the Manhattan shoreline.

(ii) *Enforcement period.* Paragraph (a)(2)(i) of this section is enforced annually from 8 a.m. until 5 p.m. on the Wednesday before Memorial Day.

(3) *Safety Zone C*—(i) *Location.* A moving safety zone including all waters of the Hudson River within a 200-yard radius of each parade vessel upon its leaving the parade of ships until it is safely berthed.

(ii) *Enforcement period.* Paragraph (a)(3)(i) of this section is enforced annually from 8 a.m. until 5 p.m. on the Wednesday before Memorial Day.

(4) *Safety Zone D*—(i) *Location.* A safety zone including all waters of the Hudson River bound by the following points: from the southeast corner of Pier 90, Manhattan, where it intersects the seawall, west to approximate position 40°46′10″ N 074°00′13″ W (NAD 1983), south to approximate position 40°45′54″ N 074°00′25″ W (NAD 1983), then east to the northeast corner of Pier 83 where it intersects the seawall.

(ii) *Enforcement period.* Paragraph (a)(4)(i) of this section is enforced annually from 10 a.m. until 5 p.m., from Friday through Monday, Memorial Day weekend.

(5) *Safety Zone E*—(i) *Location.* A moving safety zone including all waters 500 yards ahead and astern, and 200 yards on each side of the departing U.S. Navy Aircraft or Helicopter Carrier as it transits the Port of New York and New Jersey from its mooring at the Intrepid Sea, Air and Space Museum, Manhattan, to the COLREGS Demarcation line at Ambrose Channel Entrance Lighted Bell Buoy 2 (LLNR 34805).

(ii) *Enforcement period.* Paragraph (a)(5)(i) of this section is enforced annually on the Wednesday following Memorial Day. Departure time is dependent on tide, weather, and granting of authority for departure by the Captain of the Port, New York.

(b) *Effective period.* This section is effective annually from 8 a.m. on the Wednesday before Memorial Day until 4 p.m. on the Wednesday following Memorial Day.

(c) *Regulations.* (1) The general regulations contained in 33 CFR 165.23 apply.

(2) All persons and vessels shall comply with the instructions of the Coast Guard Captain of the Port or the designated on-scene-patrol personnel. these personnel comprise commissioned, warrant, and petty officers of the Coast Guard. Upon being hailed by a U. S. Coast Guard vessel by siren, radio, flashing light, or other means, the operator of a vessel shall proceed as directed.

[CGD1–98–170, 64 FR 24946, May 10, 1999]

§ 165.164 Regulated Navigation Areas, Security Zones: Dignitary Arrival/Departure and United Nations Meetings, New York, NY.

(a) *Location.* The following areas are regulated navigation areas (RNA) or security zones:

(1) *Wall Street Heliport RNA.* All waters of the East River within the following boundaries: East of a line drawn between approximate position 40°42′01″ N, 074°00′39″ W (east of The Battery) to 40°41′36″ N, 074°00′52″ W (point north of Governors Island) and north of a line drawn from the point north of Governors Island to the southwest corner of Pier 7 North, Brooklyn; and south of a line drawn between 40°42′14.8″ N, 074°00′20.3″ W (Wall Street, Manhattan), and the northwest corner of Pier 2 North, Brooklyn (NAD 1983).

(2) *Randalls and Wards Islands RNA:* All waters of the East River between the Hell Gate Rail Road Bridge (mile 8.2), and a line drawn from a point at approximate position 40°47′27.12″ N, 073°54′35.14″ W (Lawrence Point, Queens) to a point at approximate position 40°47′52.55″ N, 073°54′35.25″ W (Port Morris Stacks), and all waters of the Bronx Kill southeast of the Bronx Kill Rail Road Bridge (mile 0.6) (NAD 1983).

(3) *Marine Air Terminal, La Guardia Airport Security Zone:* All waters of Bowery Bay, Queens, New York, south of a line drawn from the western end of La Guardia Airport at approximate position 40°46′47″ N, 073°53′05″ W to the Rikers Island Bridge at approximate position 40°46′51″ N, 073°53′21″ W and east of a line drawn between the point at the Rikers Island Bridge to a point on the shore in Queens, New York, at approximate position 40°46′36″ N, 073°53′31″ W (NAD 1983).

(4) *United Nations Security Zone.* All waters of the East River bound by the following points: 40°44′37″ N, 073°58′16.5″ W (the base of East 35th Street, Manhattan), then east to 40°44′34.5″ N, 073°58′10.5″ W (about 180 yards offshore of Manhattan), then northeasterly to 40°45′29″ N, 073°57′26.5″ W (about 125 yards offshore of Manhattan at the Queensboro Bridge), then northwesterly to 40°45′31″ N, 073°57′30.5″ W (Manhattan shoreline at the Queensboro Bridge), then southerly along the shoreline to the starting point at 40°44′37″ N, 073°58′16.5″ W (NAD 1983).

(5) *United Nations West Channel Closure Security Zone.* All waters of the East River north of a line drawn from approximate position 40°44′37″ N, 073°58′16.5″ W (the base of East 35th Street, Manhattan), to approximate position 40°44′31.04″ N, 073°58′03.10″ W (approximately 400 yards east of the Manhattan shoreline), all waters west of a line drawn from approximate position 40°44′31.04″ N, 073°58′03.10″ W (approximately 400 yards east of the Manhattan shoreline), to the southern tip of Roosevelt Island at approximate position 40°44′57.96″ N, 073°57′41.57″ W, then along the western shoreline of Roosevelt Island to the Queensboro Bridge, and all waters south of the Queensboro Bridge (NAD 1983).

(6) *United Nations Full River Closure RNA.* All waters of the East River north of a line drawn from approximate position 40°44′37″ N, 073°58′16.5″ W (the base of East 35th Street, Manhattan), to approximate position 40°44′23″ N, 073°57′44.5″ W (Hunters Point, Long Island City), and south of the Queensboro Bridge (NAD 1983).

(b) *Definitions*. As used in this section—

Designated representative means any Coast Guard commissioned, warrant, or petty officer who has been designated by the COTP to act on the COTP's behalf. The designated representative may be on a Coast Guard vessel, or onboard a federal, state, or local agency vessel that is authorized to act in support of the Coast Guard.

Dignitary means the President or Vice President of the United States, or visiting heads of foreign states or governments.

(c) *Regulations*. In accordance with the general regulations in 33 CFR part 165, no person or vessel may enter or move within a RNA or security zone created by this section during enforcement periods unless granted permission to do so by the COTP New York or the designated representative. Vessel operators and persons given permission to enter or operate in the RNA or security zone must comply with all directions given to them by the COTP or the designated representative. Upon being hailed by a U.S. Coast Guard or New York City police vessel by siren, radio, flashing lights, or other means, the operator of a vessel must proceed as directed, and follow any instructions to anchor or moor up to a waterfront facility.

(d) *Enforcement*. The security zone described in paragraph (a)(4) of this section is effective and will be enforced at all times. Coast Guard Sector New York will provide actual notice to mariners for the purpose of enforcement for the regulated navigation areas and security zones described in paragraphs (a)(1), (a)(2), (a)(3), (a)(5), and (a)(6). The Captain of the Port will also provide notice to the maritime public regarding the activation of these RNAs and security zones by appropriate means, which may include but are not limited to a Local Notice to Mariners or marine information broadcasts, and at *http://homeport.uscg.mil/newyork*.

(e) *Contact information*. Vessel operators desiring to enter or operate within a RNA or security zone shall telephone the COTP at (718) 354–4356 or the designated representative via VHF channel 16 to obtain permission to do so.

[USCG–2012–0202, 78 FR 53674, Aug. 30, 2013]

§ 165.165 Regulated Navigation Area; Hudson River South of the Troy Locks, NY.

(a) *Regulated navigation area*. All navigable waters of the Hudson River south of the Troy Locks.

(b) *Definitions*. The following definitions apply to this section:

(1) *Designated representative* means any Coast Guard commissioned, warrant, or petty officer, or a Federal, State, or local law enforcement officer designated by or assisting the Captain of the Port (COTP) New York.

(2) *Horsepower (HP)* means the total maximum continuous shaft horsepower of all the vessel's main propulsion machinery.

(c) *Applicability*. This section applies to tugs with less than 3,000 horsepower when engaged in towing operations.

(d) *Regulations*. (1) Except as provided in paragraph (c)(3) of this section, vessels less than 3,000 horsepower while engaged in towing operations are not authorized to transit that portion of the Hudson River south of the Troy Locks when ice thickness on average is eight inches or greater.

(2) All Coast Guard assets enforcing this Regulated Navigation Area can be contacted on VHF marine band radio, channel 13 or 16. The COTP can be contacted at (718) 354–4356, and the public may contact the COTP to suggest changes or improvements in the terms of this Regulated Navigation Area.

(3) All persons desiring to transit through a portion of the regulated area that has operating restrictions in effect must contact the COTP at telephone number (718) 354–4356 or on VHF channel 13 or 16 to seek permission prior to transiting the affected regulated area.

(4) The COTP will notify the public of any changes in the status of this Regulated Navigation Area by Marine Safety Information Broadcast on VHF–FM marine band radio, channel 22A (157.1 MHZ).

[USCG–2010–0794, 76 FR 8656, Feb. 15, 2011]

§ 165.166 Safety Zone: Macy's July 4th Fireworks, East River, NY.

(a) *Regulated area.* The following area is a safety zone: All waters of the Upper New York Bay south of a line drawn from Pier A (Fireboat Station Pier), Battery Park City, in approximate position 40°42′15.4″ N 074°01′06.8″ W (NAD 1983) to the easternmost corner of the Ellis Island Security Zone, in approximate position 40°41′57.6″ N 074°02′06.7″ W (NAD 1983); north of a line drawn from Pier 7, Jersey City, NJ, in approximate position 40°41′26.4″ N 074°03′17.3″ W (NAD 1983) to Liberty Island Lighted Gong Buoy 29 (LLNR 34995), in approximate position 40°41′02.2″ N 074°02′24.7″ W (NAD 1983), on to Governor's Island Extension Light (LLNR 35000), in approximate position 40°41′08.3″ N 074°01′35.4″ W (NAD 1983); all waters of the East River north of a line drawn from Governors Island, in approximate position 40°41′25.3″ N 074°00′42.5″ W (NAD 1983) to the southwest corner of Pier 9A, Brooklyn; south of a line drawn from East 47th Street, Manhattan through the southern point of Roosevelt Island to 46 Road, Queens; and all waters of Newtown Creek west of the Pulaski Bascule Bridge.

(b) *Activation period.* This section is activated annually from 6:30 p.m. until 11:30 p.m. on July 4th. If the event is cancelled due to inclement weather then this section is in effect from 6:30 p.m. until 11:30 p.m. on July 5th.

(c) *Regulations.* (1) The general regulations contained in 33 CFR 165.23 apply.

(2) No vessels, except the Staten Island Ferries, will be allowed to transit the safety zone without the permission of the Captain of the Port, New York.

(3) All persons and vessels shall comply with the instructions of the Coast Guard Captain of the Port or the designated on-scene patrol personnel. These personnel comprise commissioned, warrant, and petty officers of the Coast Guard. Upon being hailed by a U.S. Coast Guard vessel by siren, radio, flashing light, or other means, the operator of a vessel shall proceed as directed.

(4) Vessels equal to or greater than 20 meters (65.6 feet) in length, carrying persons for the purpose of viewing the fireworks, may take position in an area inside the safety zone, at least 200 yards off the bulkhead on the west bank and just off the pierhead faces on the east bank of the East River between the Williamsburg Bridge and North 9th Street, Brooklyn. This area is bound by the following points: 40°42′45.5″ N 073°58′07.4″ W; thence to 40°42′50.4″ N 073°58′23.2″ W; thence to 40°43′23.1″ N 073°58′12.7″ W; thence to 40°43′21.5″ N 073°57′45.7″ W; (NAD 1983) thence back to the point of beginning. All vessels must be in this location by 6:30 p.m. (e.s.t.) the day of the event.

[CGD01–00–242, 66 FR 20405, Apr. 23, 2001, as amended by CGD01–05–017, 70 FR 35536, June 21, 2005]

§ 165.169 Safety and Security Zones: New York Marine Inspection Zone and Captain of the Port Zone.

(a) *Safety and security zones.* The following waters within the New York Marine Inspection Zone and Captain of the Port Zone are safety and security zones:

(1) *Indian Point Nuclear Power Station (IPNPS).* All waters of the Hudson River within a 300-yard radius of the IPNPS pier in approximate position 41°16′12.4″ N, 073°57′16.2″ W (NAD 83).

(2) *U.S. Coast Guard Cutters and Shore Facilities.* All waters within 100 yards of: Each moored, or anchored, Coast Guard Cutter; Coast Guard Station New York, Staten Island, NY; Coast Guard Station Sandy Hook, NJ; Coast Guard Station Kings Point, NY; and Coast Guard Aids to Navigation Team New York, Bayonne, NJ.

(3) *Part 105 Facilities*—(i) *Definition.* For the purposes of this section, *Part 105 Facility* means any facility subject to the regulations contained in 33 CFR part 105, including those designated as ''Public Access Facilities'' as defined in 33 CFR 101.105. For public identification purposes, all of these facilities are required to have signs posted along the shoreline, facing the water, indicating that there is a 25 yard waterfront security zone surrounding the facilities.

(ii) *Location.* All waters within 25 yards of each Part 105 Facility. When a barge, ferry, or other commercial vessel is conducting transfer operations at a Part 105 Facility, the 25-yard zone is measured from the outboard side of the commercial vessel.

(iii) *Regulations.* (A) Vessels not actively engaged in passenger, cargo, provision, facility maintenance or inspection, bunker transfer operations, or docking or undocking operations, authorized in advance by the Facility Security Plan, Facility Security Officer or designated representative, must not enter within any part of a zone described in paragraph (a)(3) of this section without the express permission of the Coast Guard Captain of the Port, a designated representative or designated on-scene patrol personnel.

(B) Persons seeking Captain of the Port permission to enter within a particular zone for official business other than authorized passenger, cargo, provision, facility maintenance or inspection, bunker transfer operations or authorized docking or undocking operations may request such authorization by contacting: Commander Coast Guard Sector New York, via the Sector Command Center (SCC), at: 212 Coast Guard Drive, Staten Island, NY 10305, or via fax to (718) 354–4125 or by contacting the Sector Command Center Duty Officer by phone at: (718) 354–4353.

(C) Vessels may transit through any portion of the zone that extends into the navigable channel for the sole purpose of direct and expeditious transit so long as they remain within the navigable channel, maintain the maximum safe distance from the Part 105 facility, and do not stop or loiter within the zone.

(4) *Liberty and Ellis Islands.* All waters within 150 yards of Liberty Island, Ellis Island, and the bridge between Liberty State Park and Ellis Island.

(5) *Bridge Piers and Abutments, Overhead Power Cable Towers, Piers and Tunnel Ventilators.* All waters within 25 yards of any bridge pier or abutment, overhead power cable tower, pier or tunnel ventilators south of the Troy, NY Locks. Vessels may transit through any portion of the zone that extends into the navigable channel for the sole purpose of direct and expeditious transit through the zone so long as they remain within the navigable channel, maintain the maximum safe distance from the waterfront facility and do not stop or loiter within the zone.

(6) *New York City Passenger Ship Terminal, Hudson River, NY*—(i) *Location.* All navigable waters of the Hudson River bound by the following points: From the point 40°46′09″ N, 073°59′48.7″ W on the seawall midway between Pier 92 and 94, thence northwest to approximate position 40°46′14″ N, 074°00′00.9″ W, approximately 125 yards northwest of Pier 92, thence southwest to approximate position 40°45′56.7″ N, 074°00′15.3″ W, approximately 150 yards west of Pier 86, thence east to the seawall between Pier 84 and Pier 86 at approximate position 40°45′49.6″ N, 073°59′58.1″ W (NAD 1983), thence northeast along the shoreline to the point of origin.

(ii) *Regulations.* Vessels not actively engaged in passenger, cargo, provision, facility maintenance or inspection, bunker transfer operations, or docking or undocking operations, authorized in advance by the Facility Security Plan, Facility Security Officer or designated representative, must not enter within any part of a zone described in paragraph (a)(6) of this section without the express permission of the Coast Guard Captain of the Port, a designated representative or designated on-scene patrol personnel. Persons seeking Captain of the Port permission to enter within the zone described in paragraph (a)(6) of this section for official business other than authorized passenger, cargo, provision, facility maintenance or inspection, bunker transfer operations or authorized docking or undocking operations may request such authorization by contacting: Commander Coast Guard Sector New York, via the Sector Command Center (SCC), at: 212 Coast Guard Drive, Staten Island, NY 10305, or via fax to (718) 354–4125 or by contacting the Sector Command Center Duty Officer by phone at: (718) 354–4353.

(7) *La Guardia Airport, Bowery and Flushing Bays, Queens, NY.* (i) *Location: 200-Yard Zone.* All waters of Bowery and Flushing Bays within approximately 200 yards of La Guardia Airport bound by the following points: Onshore at Steinway, Queens, in approximate position 40°46′32.1″ N, 073°53′22.4″ W, thence to 40°46′52.8″ N, 073°53′09.3″ W, thence to 40°46′54.8″ N, 073°52′54.2″ W, thence to 40°46′59.3″ N, 073°52′51.3″ W, thence to 40°47′11.8″ N, 073°53′17.3″ W, thence to 40°47′13.0″ N, 073°53′16.1″ W on Rikers Island, thence easterly along

the Rikers Island shoreline to approximate position 40°47′12.9″ N, 073°52′17.9″ W, thence to 40°47′16.7″ N, 073°52′09.2″ W, thence to 40°47′36.1″ N, 073°51′52.5″ W, thence to 40°47′35.1″ N, 073°51′50.5″ W, thence to 40°47′15.9″ N, 073°52′06.4″ W, thence to 40°47′14.5″ N, 073°52′03.1″ W, thence to 40°47′10.6″ N, 073°52′06.7″ W, thence to 40°47′01.9″ N, 073°52′02.4″ W, thence to 40°46′50.4″ N, 073°52′08.1″ W, thence to 40°46′26.8″ N, 073°51′18.5″ W, thence to 40°45′57.2″ N, 073°51′01.8″ W, thence to 40°45′51.2″ N, 073°50′59.6″ W, thence to 40°45′49.5″ N, 073°51′07.2″ W, thence to 40°45′58.8″ N, 073°51′13.2″ W, thence to 40°46′02.3″ N, 073°51′20.1″ W, thence to 40°45′48.4″ N, 073°51′37.0″ W, (NAD 1983) thence along the shoreline to the point of origin.

(ii) *Location: 100-Yard Zone.* All waters of Bowery and Flushing Bays within approximately 100 yards of La Guardia Airport bound by the following points: Onshore at Steinway, Queens, in approximate position 40°46′32.1″ N, 073°53′22.4″ W, thence to 40°46′50.6″ N, 073°53′07.3″ W, thence to 40°46′53.0″ N, 073°52′50.9″ W, thence to 40°46′57.6″ N, 073°52′47.9″ W, thence to 40°47′11.8″ N, 073°53′17.3″ W, thence to 40°47′13.0″ N, 073°53′16.1″ W on Rikers Island, thence easterly along the Rikers Island shoreline to approximate position 40°47′12.9″ N, 073°52′17.9″ W, thence to 40°47′16.7″ N, 073°52′09.2″ W, thence to 40°47′36.1″ N, 073°51′52.5″ W, thence to 40°47′35.1″ N, 073°51′50.5″ W, thence to 40°47′15.9″ N, 073°52′06.4″ W, thence to 40°47′14.5″ N, 073°52′03.1″ W, thence to 40°47′07.9″ N, 073°52′09.2″ W, thence to 40°47′01.4″ N, 073°52′06.1″ W, thence to 40°46′50.0″ N, 073°52′14.6″ W, thence to 40°46′22.2″ N, 073°51′16.0″ W, thence to 40°45′57.2″ N, 073°51′01.8″ W, thence to 40°45′52.4″ N, 073°51′00.2″ W, thence to 40°45′50.6″ N, 073°51′07.9″ W, thence to 40°45′58.8″ N, 073°51′13.2″ W, thence to 40°46′04.0″ N, 073°51′23.3″ W, thence to 40°45′51.2″ N, 073°51′38.8″ W, (NAD 1983) thence along the shoreline to the point of origin.

(iii) *Enforcement period.* The zones described in paragraph (a)(7) of this section will be effective at all times. When port security conditions permit, the Captain of the Port will allow vessels to operate within that portion of the waters described in paragraph (a)(7)(i) that lies outside of the waters described in paragraph (a)(7)(ii). Authorization to enter the waters that lie between the outer boundaries of the zones described in paragraphs (a)(7)(i) and (a)(7)(ii) will be communicated by the Captain of the Port to the public by marine broadcast, or local notice to mariners, or notice posted at *http://homeport.uscg.mil/newyork*.

(8) *John F. Kennedy Airport, Jamaica Bay, Queens, NY.* (i) *Location: Bergen Basin.* All waters of Bergen Basin north of 40°39′26.4″ N.

(ii) *Location: Thurston Basin.* All waters of Thurston Basin north of 40°38′21.2″ N.

(iii) *Location: 200-Yard Zone.* All waters of Jamaica Bay within approximately 200 yards of John F. Kennedy Airport bound by the following points: Onshore east of Bergen Basin, Queens, in approximate position 40°38′49.0″ N, 073°49′09.1″ W, thence to 40°38′42.5″ N, 073°49′13.2″ W, thence to 40°38′00.6″ N, 073°47′35.1″ W, thence to 40°37′52.3″ N, 073°47′55.0″ W, thence to 40°37′50.3″ N, 073°47′53.5″ W, thence to 40°37′59.4″ N, 073°47′32.6″ W, thence to 40°37′46.1″ N, 073°47′07.2″ W, thence to 40°37′19.5″ N, 073°47′30.4″ W, thence to 40°37′05.5″ N, 073°47′03.0″ W, thence to 40°37′34.7″ N, 073°46′40.6″ W, thence to 40°37′20.5″ N, 073°46′23.5″ W, thence to 40°37′05.7″ N, 073°46′34.9″ W, thence to 40°36′54.8″ N, 073°46′26.7″ W, thence to 40°37′14.1″ N, 073°46′10.8″ W, thence to 40°37′36.9″ N, 073°45′52.8″ W, thence to 40°38′00.8″ N, 073°44′54.9″ W, thence to 40°38′05.1″ N, 073°45′00.3″ W, (NAD 1983) thence along the shoreline to the point of origin.

(iv) *Location: 100-Yard Zone.* All waters of Jamaica Bay within approximately 100 yards of John F. Kennedy Airport bound by the following points: Onshore east of Bergen Basin, Queens, in approximate position 40°38′49.0″ N, 073°49′09.1″ W, thence to 40°38′45.1″ N, 073°49′11.6″ W, thence to 40°38′02.0″ N, 073°47′31.8″ W, thence to 40°37′52.3″ N, 073°47′55.0″ W, thence to 40°37′50.3″ N, 073°47′53.5″ W, thence to 40°38′00.8″ N, 073°47′29.4″ W, thence to 40°37′47.4″ N, 073°47′02.4″ W, thence to 40°37′19.9″ N, 073°47′25.0″ W, thence to 40°37′10.0″ N, 073°47′03.7″ W, thence to 40°37′37.7″ N, 073°46′41.2″ W, thence to 40°37′22.6″ N, 073°46′21.9″ W, thence to 40°37′05.7″ N, 073°46′34.9″ W, thence to 40°36′54.8″ N, 073°46′26.7″ W, thence to 40°37′14.1″ N, 073°46′10.8″ W, thence to 40°37′40.0″ N,

073°45′55.6″ W, thence to 40°38′02.8″ N, 073°44′57.5″ W, thence to 40°38′05.1″ N, 073°45′00.3″ W, (NAD 1983) thence along the shoreline to the point of origin.

(v) *Enforcement period.* The zones described in paragraphs (a)(8) of this section will be effective at all times. When port security conditions permit, the Captain of the Port will allow vessels to operate within that portion of the waters described in paragraph (a)(8)(iii) that lies outside of the waters described in paragraph (a)(8)(iv). Authorization to enter the waters that lie between the outer boundaries of the zones described in paragraphs (a)(8)(iii) and (a)(8)(iv) will be communicated by the Captain of the Port to the public by marine broadcast, local notice to mariners, or notice posted at *http://homeport.uscg.mil/newyork*.

(9) *NYPD Ammunition Depot, Rodman Neck, Eastchester Bay, NY.* (i) *Location: 150-Yard Zone.* All waters of Eastchester Bay within approximately 150 yards of Rodman Neck bound by the following points: Onshore in approximate position 40°51′30.4″ N, 073°48′14.9″ W, thence to 40°51′29.9″ N, 073°48′20.7″ W, thence to 40°51′16.9″ N, 073°48′22.5″ W, thence to 40°51′07.5″ N, 073°48′18.7″ W, thence to 40°50′54.2″ N, 073°48′11.1″ W, thence to 40°50′48.5″ N, 073°48′04.6″ W, thence to 40°50′49.2″ N, 073°47′56.5″ W, thence to 40°51′03.6″ N, 073°47′47.3″ W, thence to 40°51′15.7″ N, 073°47′46.8″ W, thence to 40°51′23.5″ N, 073°47′41.9″ W, (NAD 1983) thence southwesterly along the shoreline to the point of origin.

(ii) *Location: 100-Yard Zone.* All waters of Eastchester Bay within approximately 100 yards of Rodman Neck bound by the following points: Onshore in approximate position 40°51′30.4″ N, 073°48′14.9″ W, thence to 40°51′30.1″ N, 073°48′19.0″ W, thence to 40°51′16.8″ N, 073°48′20.5″ W, thence to 40°51′07.9″ N, 073°48′16.8″ W, thence to 40°50′54.9″ N, 073°48′09.0″ W, thence to 40°50′49.7″ N, 073°48′03.6″ W, thence to 40°50′50.1″ N, 073°47′57.9″ W, thence to 40°51′04.6″ N, 073°47′48.9″ W, thence to 40°51′15.9″ N, 073°47′48.4″ W, thence to 40°51′23.5″ N, 073°47′41.9″ W, (NAD 1983) thence southwesterly along the shoreline to the point of origin.

(iii) *Enforcement period.* The zones described in paragraph (a)(9) of this section will be effective at all times. When port security conditions permit, the Captain of the Port will allow vessels to operate within that portion of the waters described in paragraph (a)(9)(i) that lies outside of the waters described in paragraph (a)(9)(ii). Authorization to enter the waters that lie between the outer boundaries of the zones described in paragraphs (a)(9)(i) and (a)(9)(ii) will be communicated by the Captain of the Port to the public by marine broadcast, local notice to mariners, or notice posted at *http://homeport.uscg.mil/newyork*.

(10) *Port Newark/Port Elizabeth, Newark Bay, NJ.* All waters of Newark Bay bound by the following points: 40°41′49.9″ N, 074°07′32.2″ W, thence to 40°41′46.5″ N, 074°07′20.4″ W, thence to 40°41′10.7″ N, 074°07′45.9″ W, thence to 40°40′54.3″ N, 074°07′55.7″ W, thence to 40°40′36.2″ N, 074°08′03.8″ W, thence to 40°40′29.1″ N, 074°08′06.3″ W, thence to 40°40′21.9″ N, 074°08′10.0″ W, thence to 40°39′27.9″ N, 074°08′43.6″ W, thence to 40°39′21.5″ N, 074°08′50.1″ W, thence to 40°39′21.5″ N, 074°09′54.3″ W, (NAD 1983) thence northerly along the shoreline to the point of origin.

(11) *Global Marine Terminal, Upper New York Bay.* All waters of Upper New York Bay between the Global Marine and Military Ocean Terminals, west of the New Jersey Pierhead Channel.

(12) *Approaches to New York, Atlantic Ocean*—(i) *Location:* All waters of the Atlantic Ocean between the Ambrose to Hudson Canyon Traffic Lane and the Barnegat to Ambrose Traffic Lane bound by the following points: 40°21′29.9″ N, 073°44′41.0″ W, thence to 40°21′04.5″ N, 073°45′31.4″ W, thence to 40°15′28.3″ N, 073°44′13.8″ W, thence to 40°15′35.4″ N, 073°43′29.8″ W, thence to 40°19′21.2″ N, 073°42′53.0″ W, (NAD 1983) thence to the point of origin.

(ii) *Enforcement period.* Enforcement periods for the zone in paragraph (a)(12) of this section will be announced through marine information broadcast or other appropriate method of communication and the zone is activated whenever a vessel is anchored in the area described in paragraph (a)(12)(i) or a Coast Guard patrol vessel is on-scene.

(iii) *Regulations.* (A) The area described in paragraph (a)(12) of this section is not a Federal Anchorage Ground. Only vessels directed by the

Captain of the Port or his or her designated representative to enter this zone are authorized to anchor here.

(B) Vessels do not need permission from the Captain of the Port to transit the area described in paragraph (a)(12) of this section during periods when that security zone is not being enforced.

(13) *Liquefied Hazardous Gas (LHG) Vessels*—(i) *Definitions.* For the purposes of this section, *LHG Vessel* means any vessel constructed or converted to carry, in bulk, any of the flammable or toxic products listed in 33 CFR 127.005, Table 127.005.

(ii) *Location.* All waters within a 200-yard radius of any LHG Vessel that is underway and all waters within a 100-yard radius of any LHG Vessel that is moored or at anchor.

(iii) *Enforcement period.* The zone described in paragraph (a)(13) of this section will be activated upon entry of a LHG Vessel into the navigable waters of the United States (see 33 CFR 2.36(a) to include the 12 NM territorial sea) in the New York Captain of the Port Zone (33 CFR 3.05–30). The LHG Vessel will be identifiable by the requirement to fly the Bravo flag (red international signal flag under Pub. 102, International Code of Signals) from the outermost halyard (above the pilot house) where it can most easily be seen. In addition to visual identification of the LHG Vessel, the Captain of the Port will notify the maritime community of periods during which this zone will be enforced by methods in accordance with 33 CFR 165.7.

(14) *Cruise ships*—(i) *Definition.* For the purposes of this section, *cruise ship* means a passenger vessel as defined in 46 U.S.C. 2101(22), that is authorized to carry more than 400 passengers and is 200 or more feet in length. A cruise ship under this section will also include ferries as defined in 46 CFR 2.10–25 that are authorized to carry more than 400 passengers and are 200 feet or more in length.

(ii) *Location.* All waters within a 100-yard radius of any Cruise ship whether underway, anchored, or at berth.

(iii) *Enforcement period.* The zone described in paragraph (a)(14) of this section will be activated upon entry of any cruise ship into the navigable waters of the United States (see 33 CFR 2.36(a) to include the 12 NM territorial sea) in the New York Captain of the Port Zone (33 CFR 3.05–30). This zone will remain activated at all times while the cruise ship is within the navigable waters of the United States in the New York Captain of the Port Zone.

(15) *Designated Vessels*—(i) *Definition.* For the purposes of this section, *Designated Vessels* are vessels carrying government officials, dignitaries, or other passengers requiring protection by the U.S. Secret Service, or other Federal, State or local law enforcement agency; barges or ships carrying petroleum products, chemicals, or other hazardous cargo; and passenger vessels (as defined in 46 U.S.C. 2101(22)), that are authorized to carry more than 400 passengers and are less than 200 feet in length.

(ii) *Location.* All waters within a 100-yard radius of any Designated Vessel.

(iii) *Enforcement period.* The zone described in paragraph (a)(15) of this section will be activated upon entry of any Designated Vessel into the navigable waters of the United States (see 33 CFR 2.36(a) to include the 12 NM territorial sea) in the New York Captain of the Port Zone (33 CFR 3.05–30). This zone will remain activated at all times while the Designated Vessel is within the navigable waters of the United States in the New York Captain of the Port Zone. The Designated Vessels, including ships and barges carrying petroleum products, chemicals, or other hazardous cargo will be recognized by the requirement to fly the Bravo flag (red international signal flag under Pub 102, International Code of Signals from the outermost halyard (above the pilot house) where it can most easily be seen. Vessels that are constrained by their draft from leaving the channel may transit through the zone for the sole purpose of direct and expeditious transit so long as they remain within the navigable channel, maintain the maximum possible safe distance from the Designated Vessel, and do not stop or loiter within the zone. Designated Vessels carrying government officials, dignitaries, or other passengers requiring protection, and passenger vessels

authorized to carry more than 400 passengers and are less than 200 feet in length will be recognizable by their being escorted by a federal, state or local law enforcement or security vessel. The law enforcement or security vessel will be identifiable by flashing light, siren, flags, markings and/or through other means that clearly identify the vessel as engaged in law enforcement or security operations.

(16) *134th Street Pipeline Metering and Regulating Station*—(i) *Location*. All waters of the Hudson River within 25 yards of the 134th Street Pipeline Metering and Regulating Station.

(ii) *Regulations*. (A) Vessels not actively engaged in facility maintenance or inspection operations authorized in advance by the Pipeline Security Officer or designated representative, or authorized docking or undocking operations, must not enter within any part of a zone described in paragraph (a)(16) of this section without the express permission of the Coast Guard Captain of the Port, a designated representative or designated on-scene patrol personnel.

(B) Persons seeking Captain of the Port permission to enter within a particular zone for official business other than authorized passenger, cargo, provision, facility maintenance or inspection, bunker transfer operations or authorized docking or undocking operations may request such authorization by contacting: Commander Coast Guard Sector New York, via the Sector Command Center (SCC), at: 212 Coast Guard Drive, Staten Island, NY 10305, or via fax to (718) 354–4125 or by contacting the Sector Command Center Duty Officer by phone at: (718) 354–4353.

(17) *Waterfront heliports*—(i) *Location*. All waters of the East River within 25 yards of the East 34th Street and Wall Street Heliports, and all waters of the Hudson River within 25 yards of the West 30th Street Heliport and the Jersey City/Newport Helistop, areas of land or water under and in immediate proximity to them; buildings on such structures or contiguous to them; and equipment and materials on such structures and in such buildings. When a barge, ferry, or other commercial vessel is conducting transfer operations at a waterfront heliport, the 25-yard zone is measured from the outboard side of the commercial vessel.

(ii) *Regulations*. (A) Vessels not actively engaged in passenger, cargo, provision, facility maintenance or inspection, bunker transfer operations, or docking or undocking operations, authorized in advance by the Facility Security Plan, Facility Security Officer or designated representative, must not enter within any part of a zone described in paragraph (a)(17) of this section without the express permission of the Coast Guard Captain of the Port, a designated representative, or designated on-scene patrol personnel.

(B) Persons seeking Captain of the Port permission to enter within a particular zone for official business other than authorized passenger, cargo, provision, facility maintenance or inspection, bunker transfer operations or authorized docking or undocking operations may request such authorization by contacting: Commander Coast Guard Sector New York, via the Sector Command Center (SCC), at: 212 Coast Guard Drive, Staten Island, NY 10305, or via fax to (718) 354–4125 or by contacting the Sector Command Center Duty Officer by phone at: (718) 354–4353.

(C) Vessels entering or departing the marina north of the Newport Helistop are authorized to transit through the safety/security zone around the Newport Helistop during their transit, provided that helicopters are not taking off or landing. No loitering or unnecessary delay is authorized during these transits.

(b) *Regulations*. (1) Entry into or remaining in a safety or security zone is prohibited unless authorized by the Coast Guard Captain of the Port, New York.

(2) Persons desiring to transit the area of a safety or security zone may contact the Captain of the Port at telephone number 718–354–4088 or on VHF channel 14 (156.7 MHz) or VHF channel 16 (156.8 MHz) to seek permission to transit the area. If permission is granted, all persons and vessels must comply with the instructions of the Captain of

the Port or his or her designated representative.

[CGD01–02–132, 68 FR 2890, Jan. 22, 2003, as amended by CGD01–03–036, 69 FR 2670, Jan. 20, 2004; CGD01–03–020, 69 FR 23306, June 15, 2004; USCG–2008–0179, 73 FR 35017, June 19, 2008; USCG–2007–0074, 74 FR 7191, Feb. 13, 2009]

§ 165.170 Safety Zone; Military Munitions Recovery, Raritan River, Raritan, NJ.

(a) *Location*. The following area is a safety zone: All navigable waters of the Raritan River upstream of the Perth Amboy Railroad Bridge, which spans the waterway at approximately 40°29′46.3″ N, 74°16′51.5″ W.

(b) *Definitions*. The following definitions apply to this section:

(1) ''Designated representative'' means any U.S. Army Corps of Engineers personnel, any commissioned, warrant, or petty officer of the U.S. Coast Guard, and any member of the Coast Guard Auxiliary who has been designated by the Captain of the Port New York (COTP), to act on his or her behalf. As a designated representative, the U.S. Army Corps of Engineers official patrol vessel will communicate with vessels via VHF–FM radio or loudhailer.

(2) ''Official patrol vessel'' means any Coast Guard, Coast Guard Auxiliary, Army Corp of Engineers, state, or local law enforcement vessels assigned or approved by the COTP.

(c) *Regulations*. (1) The general regulations in 33 CFR 165.23 apply.

(2) Entry, transit, diving, dredging, dumping, fishing, trawling, conducting salvage operations, remaining or anchoring within the safety zone described in paragraph (a) of this section is prohibited unless authorized by the COTP.

(3) Upon being hailed by a U.S. Coast Guard vessel, U.S. Army Corps of Engineers vessel or a designated representative, by siren, radio, flashing light, or other means, the operator of a vessel shall proceed as directed.

(4) Vessel operators desiring to enter, transit, dive, dredge, dump, fish, trawl, conduct salvage operations, remain within or anchor within the safety zone must contact the COTP or a designated representative via VHF channel 16 or by phone at (718) 354–4353 (Sector New York Command Center) to request permission.

(5) Vessel operators given permission to enter or operate in the safety zone must comply with all directions given to them by the COTP or a designated representative.

[USCG–2012–1045, 79 FR 20794, Apr. 14, 2014]

§ 165.171 Safety Zones for fireworks displays and swim events held in Coast Guard Sector Northern New England Captain of the Port Zone.

The Coast Guard is establishing safety zones for the fireworks displays listed in the Table to § 165.171. These regulations will be enforced for the duration of each event, on or about the dates indicated in the Table to § 165.171. Mariners should consult their Local Notice to Mariners to remain apprised of the specific calendar date upon which the listed event falls for each calendar year and other specific information concerning the event. First Coast Guard District Local Notice to Mariners can be found at: *http://www.navcen.uscg.gov/*. The Sector Northern New England Marine Events schedule can also be viewed electronically at *www.homeport.uscg.mil*.

NOTE TO INTRODUCTORY TEXT OF § 165.171: Although listed in the Code of Federal Regulations, sponsors of events listed in the Table to § 165.171 shall submit an application each year in accordance with 33 CFR 100.15.

(a) The Coast Guard may patrol each event area under the direction of a designated Coast Guard Patrol Commander. The Patrol Commander may be contacted on Channel 16 VHF–FM (156.8 MHz) by the call sign ''PATCOM.'' The ''official patrol vessels'' may consist of any Coast Guard, Coast Guard Auxiliary, state, or local law enforcement vessels assigned or approved by the Captain of the Port, Sector Northern New England.

(b) Vessels may not transit the regulated areas without Patrol Commander approval. Vessels permitted to transit must operate at a no wake speed, in a manner which will not endanger participants or other crafts in the event.

(c) Spectators or other vessels shall not anchor, block, loiter, or impede the movement of event participants or official patrol vessels in the regulated areas during the effective dates and

times, or dates and times as modified through the Local Notice to Mariners, unless authorized by an official patrol vessel.

(d) The Patrol Commander may control the movement of all vessels in the regulated area. When hailed or signaled by an official patrol vessel, a vessel shall come to an immediate stop and comply with the lawful directions issued. Failure to comply with a lawful direction may result in expulsion from the area, citation for failure to comply, or both.

(e) The Patrol Commander may delay or terminate any event in this subpart at any time to assure safety. Such action may be justified as a result of weather, traffic density, spectator operation or participant behavior.

(f) For all swim events listed, vessels not associated with the event shall maintain a separation zone of 200 feet from participating swimmers.

(g) For all fireworks displays listed below, the regulated area is that area of navigable waters within a 350 yard radius of the launch platform or launch site for each fireworks display.

(h) The specific calendar date upon which the listed event falls will be published in the FEDERAL REGISTER.

TABLE TO § 165.171

5.0	MAY
5.1 Hawgs, Pies, & Fireworks	• Event Type: Fireworks Display. • Sponsor: Gardiner Maine Street. • Date: One night event between the 15th of May and the 15th of June.* • Time (Approximate): 8:00 p.m. to 10:00 p.m. • Location: In the vicinity of the Gardiner Waterfront, Gardiner, Maine in approximate position: 44°13′52″ N, 069°46′08″ W (NAD 83).
6.0	JUNE
6.1 Rotary Waterfront Days Fireworks	• Event Type: Fireworks Display. • Sponsor: Gardiner Rotary. • Date: Two night event on a Wednesday and Saturday in June.* • Time (Approximate): 8:00 p.m. to 10:00 p.m. • Location: In the vicinity of the Gardiner Waterfront, Gardiner, Maine in approximate position: 44°13′52″ N, 069°46′08″ W (NAD 83).
6.2 LaKermesse Fireworks	• Event Type: Fireworks Display. • Sponsor: Ray Gagne. • Date: One night event in June.* • Time (Approximate): 8:00 p.m. to 10:00 p.m. • Location: Biddeford, Maine in approximate position: 43°29′37″ N, 070°26′47″ W (NAD 83).
6.3 Windjammer Days Fireworks	• Event Type: Fireworks Display. • Sponsor: Boothbay Harbor Region Chamber of Commerce. • Date: One night event in June.* • Time (Approximate): 8:00 p.m. to 10:30 p.m. • Location: In the vicinity of McFarland Island, Boothbay Harbor, Maine in approximate position:

TABLE TO § 165.171—Continued

	43°50′38″ N, 069°37′57″ W (NAD 83).
7.0	JULY
7.1 Vinalhaven 4th of July Fireworks	• Event Type: Fireworks Display. • Sponsor: Vinalhaven 4th of July Committee. • Date: One night event in July.* • Time (Approximate): 8:00 p.m. to 10:30 p.m. • Location: In the vicinity of Grime's Park, Vinalhaven, Maine in approximate position: 44°02′34″ N, 068°50′26″ W (NAD 83).
7.2 Burlington Independence Day Fireworks ..	• Event Type: Fireworks Display. • Sponsor: City of Burlington, Vermont. • Date: One night event in July.* • Time (Approximate): 9:00 p.m. to 11:00 p.m. • Location: From a barge in the vicinity of Burlington Harbor, Burlington, Vermont in approximate position: 44°28′31″ N, 073°13′31″ W (NAD 83).
7.3 Camden 3rd of July Fireworks	• Event Type: Fireworks Display. • Sponsor: Camden, Rockport, Lincolnville Chamber of Commerce. • Date: One night event in July.* • Time (Approximate): 8:00 p.m. to 10:00 p.m. • Location: In the vicinity of Camden Harbor, Maine in approximate position: 44°12′32″ N, 069°02′58″ W (NAD 83).
7.4 Bangor 4th of July Fireworks	• Event Type: Fireworks Display. • Sponsor: Bangor 4th of July Fireworks. • Date: One night event in July.* • Time (Approximate): 8:00 p.m. to 10:30 p.m. • Location: In the vicinity of the Bangor Waterfront, Bangor, Maine in approximate position: 44°47′27″ N, 068°46′31″ W (NAD 83).
7.5 Bar Harbor 4th of July Fireworks	• Event Type: Fireworks Display. • Sponsor: Bar Harbor Chamber of Commerce. • Date: One night event in July.* • Time (Approximate): 8:00 p.m. to 10:30 p.m. • Location: In the vicinity of Bar Harbor Town Pier, Bar Harbor, Maine in approximate position: 44°23′31″ N, 068°12′15″ W (NAD 83).
7.6 Boothbay Harbor 4th of July Fireworks	• Event Type: Fireworks Display. • Sponsor: Town of Boothbay Harbor. • Date: One night event in July.* • Time (Approximate): 8:00 p.m. to 10:30 p.m. • Location: In the vicinity of McFarland Island, Boothbay Harbor, Maine in approximate position: 43°50′38″ N, 069°37′57″ W (NAD 83).

TABLE TO § 165.171—Continued

7.7 Colchester 4th of July Fireworks	• Event Type: Fireworks Display. • Sponsor: Town of Colchester, Recreation Department. • Date: One night event in July.* • Time (Approximate): 8:00 p.m. to 10:00 p.m. • Location: In the vicinity of Bayside Beach and Mallets Bay in Colchester, Vermont in approximate position: 44°32′44″ N, 073°13′10″ W (NAD 83).
7.8 Eastport 4th of July Fireworks	• Event Type: Fireworks Display. • Sponsor: Eastport 4th of July Committee. • Date: One night event in July.* • Time (Approximate): 9:00 p.m. to 9:30 p.m. • Location: From the Waterfront Public Pier in Eastport, Maine in approximate position: 44°54′25″ N, 066°58′55″ W (NAD 83).
7.9 Ellis Short Sand Park Trustee Fireworks ..	• Event Type: Fireworks Display. • Sponsor: William Burnham. • Date: One night event in July.* • Time (Approximate): 8:30 p.m. to 11:00 p.m. • Location: In the vicinity of York Beach, Maine in approximate position: 43°10′27″ N, 070°36′26″ W (NAD 83).
7.10 Hampton Beach 4th of July Fireworks	• Event Type: Fireworks Display. • Sponsor: Hampton Beach Village District. • Date: One night event in July.* • Time (Approximate): 8:30 p.m. to 11:00 p.m. • Location: In the vicinity of Hampton Beach, New Hampshire in approximate position: 42°54′40″ N, 070°36′25″ W (NAD 83).
7.11 Jonesport 4th of July Fireworks	• Event Type: Fireworks Display. • Sponsor: Jonesport 4th of July Committee. • Date: One night event in July.* • Time (Approximate): 8:00 p.m. to 10:30 p.m. • Location: In the vicinity of Beals Island, Jonesport, Maine in approximate position: 44°31′18″ N, 067°36′43″ W (NAD 83).
7.12 Lubec Bicentennial Fireworks	• Event Type: Fireworks Display. • Sponsor: Town of Lubec, Maine. • Date: One night event in July.* • Time (Approximate): 8:00 p.m. to 10:30 p.m. • Location: In the vicinity of the Lubec Public Boat Launch in approximate position: 44°51′52″ N, 066°59′06″ W (NAD 83).
7.13 Main Street Heritage Days 4th of July Fireworks.	• Event Type: Fireworks Display. • Sponsor: Main Street Inc. • Date: One night event in July.* • Time (Approximate): 8:00 p.m. to 10:30 p.m. • Location: In the vicinity of Reed and Reed Boat Yard, Woolwich, Maine in approximate position:

TABLE TO § 165.171—Continued

	43°54′56″ N, 069°48′16″ W (NAD 83).
7.14 Portland Harbor 4th of July Fireworks	• Event Type: Fireworks Display. • Sponsor: Department of Parks and Recreation, Portland, Maine. • Date: One night event in July.* • Time (Approximate): 8:30 p.m. to 10:30 p.m. • Location: In the vicinity of East End Beach, Portland, Maine in approximate position: 43°40′16″ N, 070°14′44″ W (NAD 83).
7.15 St. Albans Day Fireworks	• Event Type: Fireworks Display. • Sponsor: St. Albans Area Chamber of Commerce. • Date: One night event in July.* • Time (Approximate): 9:00 p.m. to 10:00 p.m. • Location: From the St. Albans Bay dock in St. Albans Bay, Vermont in approximate position: 44°48′25″ N, 073°08′23″ W (NAD 83).
7.16 Stonington 4th of July Fireworks	• Event Type: Fireworks Display. • Sponsor: Deer Isle—Stonington Chamber of Commerce. • Date: One night event in July.* • Time (Approximate): 8:00 p.m. to 10:30 p.m. • Location: In the vicinity of Two Bush Island, Stonington, Maine in approximate position: 44°08′57″ N, 068°39′54″ W (NAD 83).
7.17 Southwest Harbor 4th of July Fireworks	• Event Type: Fireworks Display. • Sponsor: Sharon Gilley. • Date: One night event in July.* • Time (Approximate): 8:00 p.m. to 10:30 p.m. • Location: Southwest Harbor, Maine in approximate position: 44°16′25″ N, 068°19′21″ W (NAD 83).
7.18 Prentice Hospitality Group Fireworks	• Event Type: Fireworks Display. • Sponsor: Prentice Hospitality Group. • Date: One night event in July.* • Time (Approximate): 8:00 p.m. to 10:30 p.m. • Location: Chebeague Island, Maine in approximate position: 43°45′12″ N, 070°06′27″ W (NAD 83).
7.19 Shelburne Triathlons	• Event Type: Swim Event. • Sponsor: Race Vermont. • Date: Up to three Saturdays throughout July and August.* • Time (Approximate): 7:00 a.m. to 11:00 a.m. • Location: The regulated area includes all waters of Lake Champlain in the vicinity of Shelburne Beach in Shelburne, Vermont within a 400 yard radius of the following point (NAD 83): 44°21′45″ N, 075°15′58″ W.

TABLE TO § 165.171—Continued

7.20 St. George Days Fireworks	• Event Type: Fireworks. • Sponsor: Town of St. George. • Date: One night event in July.* • Time (Approximate): 8:30 p.m. to 10:30 p.m. • Location: The regulated area includes all waters of Inner Tenants Harbor, ME, in approximate position (NAD 83): 43°57′41.37″ N, 069°12′45″ W.
7.21 Tri for a Cure Swim Clinics and Triathlon	• Event Type: Swim Event. • Sponsor: Maine Cancer Foundation. • Date: A multi-day event held throughout July.* • Time (Approximate): 8:30 a.m. to 11:30 a.m. • Location: The regulated area includes all waters of Portland Harbor, Maine in the vicinity of Spring Point Light within the following points (NAD 83): 43°39′01″ N, 070°13′32″ W. 43°39′07″ N, 070°13′29″ W. 43°39′06″ N, 070°13′41″ W. 43°39′01″ N, 070°13′36″ W.
7.22 Richmond Days Fireworks	• Event Type: Fireworks Display. • Sponsor: Town of Richmond, Maine. • Date: A one day event in July.* • Time (Approximate): 8:00 p.m. to 10:00 p.m. • Location: From a barge in the vicinity of the inner harbor, Tenants Harbor, Maine in approximate position: 44°08′42″ N, 068°27′06″ W (NAD83).
7.23 Colchester Triathlon	• Event Type: Swim Event. • Sponsor: Colchester Parks and Recreation Department. • Date: A one day event in July.* • Time (Approximate): 7:00 a.m. to 11:00 a.m. • Location: The regulated area includes all waters of Malletts Bay on Lake Champlain, Vermont within the following points (NAD 83): 44°32′18″ N, 073°12′35″ W. 44°32′28″ N, 073°12′56″ W. 44°32′57″ N, 073°12′38″ W.
7.24 Peaks to Portland Swim	• Event Type: Swim Event. • Sponsor: Cumberland County YMCA. • Date: A one day event in July.* • Time (Approximate): 5:00 a.m. to 1:00 p.m. • Location: The regulated area includes all waters of Portland Harbor between Peaks Island and East End Beach in Portland, Maine within the following points (NAD 83): 43°39′20″ N, 070°11′58″ W. 43°39′45″ N, 070°13′19″ W. 43°40′11″ N, 070°14′13″ W. 43°40′08″ N, 070°14′29″ W. 43°40′00″ N, 070°14′23″ W.

TABLE TO § 165.171—Continued

	43°39′34″ N, 070°13′31″ W. 43°39′13″ N, 070°11′59″ W.
7.25 Friendship Days Fireworks	• Event Type: Fireworks Display. • Sponsor: Town of Friendship. • Date: A one day event in July.* • Time (Approximate): 8:00 p.m. to 10:30 p.m. • Location: In the vicinity of the Town Pier, Friendship Harbor, Maine in approximate position: 43°58′23″ N, 069°20′12″ W (NAD83).
7.26 Bucksport Festival and Fireworks	• Event Type: Fireworks Display. • Sponsor: Bucksport Bay Area Chamber of Commerce. • Date: A one day event in July.* • Time (Approximate): 8:00 p.m. to 10:30 p.m. Location: In the vicinity of the Verona Island Boat Ramp, Verona, Maine, in approximate position: 44°34′9″ N, 068°47′28″ W (NAD83).
7.27 Nubble Light Swim Challenge	• Event Type: Swim Event. • Sponsor: Nubble Light Challenge. • Date: A one day event in July.* • Time (Approximate): 9:00 a.m. to 12:30 p.m. • Location: The regulated area includes all waters around Cape Neddick, Maine and within the following coordinates: 43°10′28″ N, 070°36′26″ W. 43°10′34″ N, 070°36′06″ W. 43°10′30″ N, 070°35′45″ W. 43°10′17″ N, 070°35′24″ W. 43°09′54″ N, 070°35′18″ W. 43°09′42″ N, 070°35′37″ W. 43°09′51″ N, 070°37′05″ W.
8.0	AUGUST
8.1 Sprucewold Cabbage Island Swim	• Event Type: Swim Event. • Sponsor: Sprucewold Association. • Date: A one day event in August.* • Time (Approximate): 1:00 p.m. to 6:00 p.m. • Location: The regulated area includes all waters of Linekin Bay between Cabbage Island and Sprucewold Beach in Boothbay Harbor, Maine within the following points (NAD 83): 43°50′37″ N, 069°36′23″ W. 43°50′37″ N, 069°36′59″ W. 43°50′16″ N, 069°36′46″ W. 43°50′22″ N, 069°36′21″ W.
8.2 Westerlund's Landing Party Fireworks	• Event Type: Fireworks Display. • Sponsor: Portside Marina. • Date: A one day event in August.* • Time (Approximate): 8:00 p.m. to 10:30 p.m.

TABLE TO § 165.171—Continued

	• Location: In the vicinity of Westerlund's Landing in South Gardiner, Maine in approximate position: 44°10′19″ N, 069°45′24″ W (NAD 83).
8.3 Y-Tri Triathlon	• Event Type: Swim Event. • Sponsor: Plattsburgh YMCA. • Date: A one day event in August.* • Time (Approximate): 9:00 a.m. to 10:00 a.m. • Location: The regulated area includes all waters of Treadwell Bay on Lake Champlain in the vicinity of Point Au Roche State Park, Plattsburgh, New York within the following points (NAD 83): 44°46′30″ N, 073°23′26″ W. 44°46′17″ N, 073°23′26″ W. 44°46′17″ N, 073°23′46″ W. 44°46′29″ N, 073°23′46″ W.
8.4 York Beach Fire Department Fireworks	• Event Type: Fireworks Display. • Sponsor: York Beach Fire Department. • Date: A one day event in August.* • Time (Approximate): 8:30 p.m. to 11:30 p.m. • Location: In the vicinity of Short Sand Cove in York, Maine in approximate position: 43°10′27″ N, 070°36′25″ W (NAD 83).
8.5 Rockland Breakwater Swim	• Event Type: Swim Event. • Sponsor: Pen-Bay Masters. • Date: A one day event in August.* • Time (Approximate): 7:30 a.m. to 1:30 p.m. • Location: The regulated area includes all waters of Rockland Harbor, Maine in the vicinity of Jameson Point within the following points (NAD 83): 44°06′16″ N, 069°04′39″ W 44°06′13″ N, 069°04′36″ W. 44°06′12″ N, 069°04′43″ W. 44°06′17″ N, 069°04′44″ W. 44°06′18″ N, 069°04′40″ W.
8.6 Tri for Preservation	• Event Type: Swim Event. • Sponsor: Tri-Maine Productions. • Date: A one day event in August.* • Time (Approximate): 7:30 a.m. to 9:00 a.m. • Location: In the vicinity of Crescent Beach State Park in Cape Elizabeth, Maine in approximate position: 43°33′46″ N, 070°13′48″ W. 43°33′41″ N, 070°13′46″ W. 43°33′44″ N, 070°13′40″ W. 43°33′47″ N, 070°13′46″ W.
8.7 North Hero Air Show	• Event Type: Air Show. • Sponsor: North Hero Fire Department. • Date: A one day event in August.* • Time (Approximate): 10:00 a.m. to 5:00 p.m.

TABLE TO § 165.171—Continued

	• Location: In the vicinity of Shore Acres Dock, North Hero, Vermont in approximate position: 44°48′24″ N, 073°17′02″ W. 44°48′22″ N, 073°16′46″ W. 44°47′53″ N, 073°16′54″ W. 44°47′54″ N, 073°17′09″ W.
9.0	SEPTEMBER
9.1 Windjammer Weekend Fireworks.	• Event Type: Fireworks Display. • Sponsor: Town of Camden, Maine. • Date: A one night event in September.* • Time (Approximate): 8:00 p.m. to 9:30 p.m. • Location: From a barge in the vicinity of Northeast Point, Camden Harbor, Maine in approximate position: 44°12′10″ N, 069°03′11″ W (NAD 83).
9.2 Eastport Pirate Festival Fireworks	• Event Type: Fireworks Display. • Sponsor: Eastport Pirate Festival. • Date: A one night event in September.* • Time (Approximate): 7:00 p.m. to 10:00 p.m. • Location: From the Waterfront Public Pier in Eastport, Maine in approximate position: 44°54′17″ N, 066°58′58″ W (NAD 83).
9.3 The Lobsterman Triathlon	• Event Type: Swim Event. • Sponsor: Tri-Maine Productions. • Date: A one day event in September.* • Time (Approximate): 8:00 a.m. to 11:00 a.m. • Location: The regulated area includes all waters in the vicinity of Winslow Park in South Freeport, Maine within the following points (NAD 83): 43°47′59″ N, 070°06′56″ W. 43°47′44″ N, 070°06′56″ W. 43°47′44″ N, 070°07′27″ W. 43°47′57″ N, 070°07′27″ W.
9.4 Eliot Festival Day Fireworks	• Event Type: Fireworks Display. • Sponsor: Eliot Festival Day Committee. • Date: A one night event in September.* • Time (Approximate): 8:00 p.m. to 10:30 p.m. • Location: In the vicinity of Eliot Town Boat Launch, Eliot, Maine in approximate position: 43°08′56″ N, 070°49′52″ W (NAD 83).

*Date subject to change. Exact date will be posted in Notice of Enforcement and Local Notice to Mariners.

[USCG–2011–1023, 77 FR 23608, Apr. 20, 2012, as amended by USCG–2012–1057, 78 FR 47562, Aug. 6, 2013; USCG–2013–0904, 79 FR 18176, Apr. 1, 2014]

§ 165.172 Safety Zone; Underwater Hazard, Gravesend Bay, Brooklyn, NY.

(a) *Location*. The following area is a safety zone: All navigable waters of Gravesend Bay within a 110-yard radius of a point in position 40°36′30″ N, 074°02′14″ W (NAD 83), approximately 70-yards southeast of the Verrazano Bridge Brooklyn tower.

(b) *Regulations*. (1) The general regulations contained in 33 CFR 165.23 apply.

(2) Entering into, transiting through, diving, dredging, dumping, fishing, trawling, conducting salvage operations, remaining within or anchoring within this safety zone is prohibited unless authorized by the Captain of the Port (COTP) New York or the designated on-scene representative.

(3) The ''designated on-scene representative'' is any Coast Guard commissioned, warrant, or petty officer who has been designated by the COTP New York.

(4) Vessel operators desiring to enter or operate within the safety zone may contact the COTP New York or the designated representative at the Coast Guard Sector New York Command Center via VHF Channel 16 or by phone at (718) 354–4353 to request permission.

(5) Vessel operators given permission to enter or operate in the safety zone must comply with all directions given to them by the COTP New York or the on-scene representative.

[USCG–2010–1091, 76 FR 31234, May 31, 2011]

§ 165.173 Safety Zones for annually recurring marine events held in Coast Guard Southeastern New England Captain of the Port Zone.

(a) *Regulations*. (1) The general regulations contained in 33 CFR 165.23 as well as the following regulations apply to the fireworks displays and swim events listed in the Table to § 165.173. These regulations may be enforced for the duration of each event.

(2) Notifications will be made to the local maritime community through the Local Notice to Mariners well in advance of the events. If the event does not have a date listed, then exact dates and times of the enforcement period will be announced through a Notice of Enforcement in the FEDERAL REGISTER.

NOTE TO PARAGRAPH (a): Although listed in the Code of Federal Regulations, sponsors of events listed in the Table shall submit an application each year in accordance with 33 CFR 100.15.

(b) *Definitions*. The following definitions apply to this section:

(1) *Designated representative*. A ''designated representative'' is any Coast Guard commissioned, warrant or petty officer of the U.S. Coast Guard who has been designated by the Captain of the Port, Southeastern New England (COTP), to act on his or her behalf. The designated representative may be on an official patrol vessel or may be on shore and will communicate with vessels via VHF–FM radio or loudhailer. In addition, members of the Coast Guard Auxiliary may be present to inform vessel operators of this regulation.

(2) *Official patrol vessels*. Official patrol vessels may consist of any Coast Guard, Coast Guard Auxiliary, state, or local law enforcement vessels assigned or approved by the COTP.

(3) *Spectators*. All persons and vessels not registered with the event sponsor as participants or official patrol vessels.

(c) The Coast Guard may patrol each event area under the direction of a designated Coast Guard Patrol Commander. The Patrol Commander may be contacted on Channel 16 VHF–FM (156.8 MHz) by the call sign ''PATCOM.'' The ''official patrol vessels'' may consist of any Coast Guard, Coast Guard Auxiliary, state, or local law enforcement vessels assigned or approved by the Captain of the Port, Southeastern New England.

(d) Vessels may not transit the regulated areas without Patrol Commander approval. Vessels permitted to transit must operate at a no wake speed, in a manner which will not endanger participants or other crafts in the event.

(e) Spectators or other vessels shall not anchor, block, loiter, or impede the movement of event participants or official patrol vessels in the regulated areas during the effective dates and times, or dates and times as modified through a Notice of Enforcement published in the FEDERAL REGISTER, unless authorized by an official patrol vessel.

(f) The Patrol Commander may control the movement of all vessels in the regulated area. When hailed or signaled by an official patrol vessel, a vessel shall come to an immediate stop and comply with the lawful directions issued. Failure to comply with a lawful direction may result in expulsion from the area, citation for failure to comply, or both.

(g) The Patrol Commander may delay or terminate any event in this subpart at any time to ensure safety. Such action may be justified as a result of weather, traffic density, spectator operation or participant behavior.

(h) For all fireworks displays listed below, the regulated area is that area of navigable waters within the specified radius of the launch platform or launch site for each fireworks display, unless modified later in a Notice of Enforcement published in the FEDERAL REGISTER.

TABLE TO § 165.173

1.0 365 DAY JANUARY–DECEMBER	
1.1 Provincetown Fireworks	• Event Type: Fireworks Display. • Date: Enforced on any day during the duration of the event as specified by a Notice of Enforcement published in the FEDERAL REGISTER. • Time: Approximately 5:00 p.m. to 11:59 p.m. • Location: From a barge in the vicinity of the Provincetown Harbor, Provincetown, MA. • Position: Within 500 yards of 41°28′44″ N, 070°10′83″ W (NAD 83). • Safety Zone Dimension: Approximately 300 yard radius circle around the fireworks barge.
1.2 Providence Fireworks	• Event Type: Fireworks Display. • Date: Enforced on any day during the duration of the event as specified by a Notice of Enforcement published in the FEDERAL REGISTER. • Time: Approximately 5:00 p.m. to 11:59 p.m. • Location: From a barge in the vicinity of the Hurricane Barrier in the Providence River, Providence, RI. • Position: Within 500 yards of 41°48′50″ N, 071°23′43″ W (NAD 83). • Safety Zone Dimension: Approximately 300 yard radius circle around the fireworks barge.
1.3 Fall River Fireworks	• Event Type: Fireworks Display. • Date: Enforced on any day during the duration of the event as specified by a Notice of Enforcement published in the FEDERAL REGISTER. • Time: Approximately 5:00 p.m. to 11:59 p.m. • Location: From a barge in the vicinity of Battleship Cove, Fall River, MA. • Position: Within 500 yards of 41°42′37″ N, 071°09′53″ W (NAD 83). • Safety Zone Dimension: Approximately 200 yard radius circle around the fireworks barge.
6.0 JUNE	
6.1 Oak Bluffs Summer Solstice	• Event Type: Fireworks Display. • Date: One night on the 3rd or 4th weekend of June. • Time: Approximately 8:00 p.m. to 11:59 p.m. • Location: From a barge in the vicinity of Town Beach, Oak Bluffs, MA. • Position: Within 500 yards of 41°27′19″ N, 070°33′08″ W (NAD 83). • Safety Zone Dimension: Approximately 300 yard radius circle around the fireworks barge.

TABLE TO § 165.173—Continued

6.2 RI National Guard Air Show	• Event Type: Air Show. • Date: One weekend (Friday, Saturday, and Sunday) in June or July. • Time: Approximately 9:00 a.m. to 7:00 p.m. • Location: (1) All waters over the West Passage of Narragansett Bay, in the vicinity of the Quonset State Airport, North Kingston, RI which are within a 4000-yard radius arc extending from position 41°35′44″ N, 071°24′14″ W (NAD 83); and (2) All waters over the West Passage of Narragansett Bay, in the vicinity of Narragansett Pier, Narragansett, RI, which are within a 2000-yard radius arc extending from position 41°26′17″ N, 071°27′02″ W (NAD 83) (Friday only). • Safety Zone Dimension: Approximately 1000 yards long by 1000 yards wide.
7.0 JULY	
7.1 Marion 4th of July Fireworks	• Event Type: Fireworks Display. • Date: One night between July 1st and July 10th, as announced in the Local Notice to Mariners. • Time: Approximately 8:00 p.m. to 11:59 p.m. • Location: From a barge in the vicinity of Outer Sipican Harbor, Marion, MA. • Position: Within 500 yards of 41°42′17″ N, 070°45′08″ W (NAD 83). • Safety Zone Dimension: Approximately 300 yard radius circle around the fireworks barge.
7.2 Oyster Harbors July 4th Festival	• Event Type: Fireworks Display. • Date: One night between July 1st and July 10th, as announced in the Local Notice to Mariners. • Time: Approximately 8:00 p.m. to 11:59 p.m. • Location: From a barge in the vicinity of Tim's Cove, North Bay, Osterville, MA. • Position: Within 500 yards of 41°37′29″ N, 070°25′12″ W (NAD 83). • Safety Zone Dimension: Approximately 200 yard radius circle around the fireworks barge.
7.3 North Kingstown Fireworks Display.	• Event Type: Fireworks Display. • Date: One night between July 1st and July 10th, as announced in the Local Notice to Mariners. • Time: Approximately 8:00 p.m. to 11:59 p.m. • Location: From a barge in the vicinity of Town Beach, North Kingston, RI. • Position: Within 500 yards of 41°33′59″ N, 071°26′23″ W (NAD 83). • Safety Zone Dimension: Approximately 200 yard radius circle around the fireworks barge.
7.4 Falmouth Fireworks	• Event Type: Fireworks Display. • Date: One night between July 1st and July 10th, as announced in the Local Notice to Mariners. • Time: Approximately 8:00 p.m. to 11:59 p.m. • Location: From a barge in the vicinity of Falmouth Beach, Falmouth, MA. • Position: Within 500 yards of 41°32′27″ N, 070°35′26″ W (NAD 83). • Safety Zone Dimension: Approximately 300 yard radius circle around the fireworks barge.
7.5 Town of Nantucket Fireworks	• Event Type: Fireworks Display. • Date: One night between July 1st and July 10th, as announced in the Local Notice to Mariners. • Time: Approximately 8:00 p.m. to 11:59 p.m.

TABLE TO § 165.173—Continued

	• Location: From a barge in the vicinity of Jetties Beach, Nantucket Sound, MA. • Position: Within 500 yards of 41°19′00″ N, 070°06′30″ W (NAD 83). • Safety Zone Dimension: Approximately 200 yard radius circle around the fireworks barge.
7.6 City of Newport 4th of July Fireworks	• Event Type: Fireworks Display. • Date: One night between July 1st and July 10th, as announced in the Local Notice to Mariners. • Time: Approximately 8:00 p.m. to 11:59 p.m. • Location: From the shore in the vicinity of Fort Adams, Newport, RI. • Position: Within 500 yards of 41°28′49″ N, 071°20′12″ W (NAD 83). • Safety Zone Dimension: Approximately 350 yard radius circle around the launch site.
7.7 Town of Barnstable/Hyannis July 4th Fireworks.	• Event Type: Fireworks Display. • Date: One night between July 1st and July 10th, as announced in the Local Notice to Mariners. • Time: Approximately 8:00 p.m. to 11:59 p.m. • Location: From a barge in the vicinity of Lewis Bay, Hyannis, MA. • Position: Within 500 yards of 41°38′20″ N, 070°15′08″ W (NAD 83). • Safety Zone Dimension: Approximately 350 yard radius circle around the fireworks barge.
7.8 Edgartown 4th of July Fireworks Celebration.	• Event Type: Fireworks Display. • Date: One night between July 1st and July 10th, as announced in the Local Notice to Mariners. • Time: Approximately 8:00 p.m. to 11:59 p.m. • Location: From a barge in the vicinity of Edgartown Outer Harbor, Edgartown, MA. • Position: Within 500 yards of 41°22′39″ N, 070°30′14″ W (NAD 83). • Safety Zone Dimension: Approximately 300 yard radius circle around the fireworks barge.
7.9 City of New Bedford Fireworks Display	• Event Type: Fireworks Display. • Date: One night between July 1st and July 10th, as announced in the Local Notice to Mariners. • Time: Approximately 8:00 p.m. to 11:59 p.m. • Location: From a barge in the vicinity of New Bedford Harbor, New Bedford, MA. • Position: Within 500 yards of 41°37′55″ N, 070°54′44″ W (NAD 83). • Safety Zone Dimension: Approximately 250 yard radius circle around the fireworks barge.
7.10 Onset Fireworks	• Event Type: Fireworks Display. • Date: One night between July 1st and July 10th, as announced in the Local Notice to Mariners. • Time: Approximately 8:00 p.m. to 11:59 p.m. • Location: On the shore, in the vicinity of Shellpoint Beach, Onset, MA. • Position: Within 500 yards of 41°44′13″ N, 070°39′51″ W (NAD 83). • Safety Zone Dimension: Approximately 300 yard radius circle around the fireworks launch site.
7.11 Bristol 4th of July Fireworks	• Event Type: Fireworks Display.

TABLE TO § 165.173—Continued

	• Date: One night between July 1st and July 10th, as announced in the Local Notice to Mariners. • Time: Approximately 8:00 p.m. to 11:59 p.m. • Location: In the vicinity of Northern portion of the Bristol Harbor, Bristol, RI, on the section of Poppasquash Rd separating the harbor and Mill Pond. • Position: Within 500 yards of 41°40′53.4″ N, 071°17′00″ W (NAD 83). • Safety Zone Dimension: Approximately 300 yard radius circle around the fireworks launch site.
7.12 Swim Buzzards Bay	• Event Type: Swim Event. • Date: One Saturday or Sunday in July or August, as announced in the Local Notice to Mariners. • Time: Start times will vary from 6:00 a.m. to 11:59 a.m., and last approximately two hours until the last swimmer is ashore. Start time will be announced in advance in the Local Notice to Mariners. • Location: The regulated area includes all waters in the vicinity of the Outer New Bedford Harbor, within 500 yards along a centerline with an approximate start point of 41°36′35″ N, 070°54′18″ W (NAD 83) and an approximate end point of 41°37′26″ N, 070°53′48″ W (NAD 83) at Davy's Locker Restaurant in New Bedford, MA, to Fort Phoenix Beach in Fairhaven, MA. • Safety Zone Dimension: 500 yards on either side of the centerline described above.
7.13 Save the Bay Swim	• Event Type: Swim Event. • Date: One Saturday or Sunday in July or August, as announced in the Local Notice to Mariners. • Time: Start time will vary from 6:00 a.m. to 11:59 a.m. and last for approximately four hours, until the last swimmer is ashore. Start time will be announced in advance in the Local Notice to Mariners. • Location: The regulated area includes all waters in the vicinity of the Newport/Pell Bridge, East Passage of Narragansett Bay, along a centerline with an approximate start point of 41°30′24″ N, 071°19′49″ W (NAD 83) and an approximate end point of 41°30′39″ N, 071°21′50″ W (NAD 83), *i.e.*, a line drawn from the Officers' Club, Coaster's Harbor Island, Naval Station Newport, to Potter Cove, Jamestown. • Safety Zone Dimension: 500 yards on either side of the centerline described above.
8.0 AUGUST	
8.1 Boston Pops Nantucket	• Event Type: Fireworks Display. • Date: One night in August as announced in the Local Notice to Mariners. • Time: Approximately 8:00 p.m. to 11:59 p.m. • Location: On the shore, in the vicinity of Jetties Beach, Nantucket, MA. • Position: Within 500 yards of 41°17′43″ N, 070°06′10″ W (NAD 83). • Safety Zone Dimension: Approximately 400 yard radius circle around the fireworks barge.
8.2 Oak Bluffs Fireworks	• Event Type: Fireworks Display. • Date: One night in August. • Time: Approximately 8:00 p.m. to 11:59 p.m. • Location: From a barge in the vicinity of Oak Bluffs Harbor, Oak Bluffs, MA. • Position: Within 500 yards of 41°27′27″ N, 070°33′17″ W (NAD 83).

TABLE TO § 165.173—Continued

	• Safety Zone Dimension: Approximately 350 yard radius circle around the fireworks barge.
8.3 Newport Salute to Summer Fireworks	• Event Type: Fireworks Display. • Date: One night during the last two weekends in August or 1st weekend in September. • Time: Approximately 8:00 p.m. to 11:59 p.m. • Location: From a barge in the vicinity of Naval Station Newport, Newport, RI. • Position: Within 500 yards of 41°30′15″ N, 071°19′50″ W (NAD 83). • Safety Zone Dimension: Approximately 400 yard radius circle around the fireworks barge.
9.0 SEPTEMBER	
9.1 Provincetown Harbor Swim for Life	• Event Type: Swim Event. • Date: On a day in September as announced in the Local Notice to Mariners. • Time: Times will vary from 10:00 a.m. until the last swimmer is ashore, no later than 2:00 p.m. • Location: The regulated area includes all waters in the vicinity of the Provincetown Harbor along a centerline between the start point, the Long Point Lighthouse. approximate position 42°01′59″ N, 070°10′07″ W (NAD 83), and the end point, the Boatslip Resort, Provincetown, MA., approximate position 42°02′48″ N, 070°11′24″ W (NAD 83). • Safety Zone Dimension: 250 yards on either side of the centerline described above.
9.2 Spirit of Somerset Celebration	• Event Type: Fireworks Display. • Date: One night in September, as announced in the Local Notice to Mariners. • Time: Approximately 8:00 p.m. to 11:59 p.m. • Location: On the shore, in the vicinity of Mallard Point, Somerset, MA. • Position: Within 500 yards of 41°46′18″ N, 071°07′14″ W (NAD 83). • Safety Zone Dimension: Approximately 200 yard radius circle around the fireworks launch site.
10.0 OCTOBER	
10.1 Yarmouth Seaside Festival Fireworks	• Event Type: Fireworks Display. • Date: One night in October, as announced in the Local Notice to Mariners. • Time: Approximately 7:00 p.m. to 11:59 p.m. • Location: On the shore, in the vicinity of Seagull Beach, West Yarmouth, MA. • Position: Within 500 yards of 41°38′06″ N, 070°13′13″ W (NAD 83). • Safety Zone Dimension: Approximately 300 yard radius circle around the fireworks launch site.

[USCG–2011–1026, 76 FR 30191, May 22, 2012]

EFFECTIVE DATE NOTE: By USCG–2014–0061, 79 FR 34629, June 18, 2014, the table in § 165.173 was amended by adding a new category entitled ''5.0 MAY'' below the category ''1.0 365 DAY JANUARY–DECEMBER'' and above the category ''6.0 JUNE''; redesignating item 6.2, ''RI National Guard Air Show'' as item 5.1, and locating it beneath the category ''5.0 MAY''; redesignating item 7.12 ''Swim Buzzards Bay'' as item 6.2, and locating it below item 6.1 ''Oak Bluffs Summer Solstice'', and reserving item 7.12; revising the entry for ''Date'' in newly redesignated item 5.1, ''RI Air National Guard Air

Show'' to read ''Date: One weekend (Friday, Saturday, and Sunday) in May, June, or July, as announced in the local Notice to Mariners.''; and revising the entry for ''Date'' in newly redesignated item 6.2 ''Swim Buzzards Bay'' to read ''Date: One Saturday or Sunday in June, July, or August, as announced in the local Notice to Mariners.'', effective July 18, 2014.

§ 165.202 [Reserved]

FIFTH COAST GUARD DISTRICT

§ 165.T05–0145 Safety Zone, Barnegat Inlet; Barnegat Light, NJ.

(a) *Location*. The following area is a safety zone: All waters of Barnegat Inlet, Barnegat Light, NJ in an area bounded on the Northwest of the inlet by a line drawn from position 39°46′02″ N, 074°06′00″ W to 39°45′52″ N, 074°06′14″ W, on the Southeast by a line drawn from position 39°45′33″ N, 074°05′24″ W, to 39°45′26″ N, 074°05′34″ W, and bounded on the Northeast and Southwest by the Barnegat Inlet jetties.

(b) *Enforcement period*. This rule will be enforced from March 7, 2014 to November 31, 2014, unless cancelled earlier by the Captain of the Port, Delaware Bay once all north jetty repair operations are completed. Vessel traffic will be notified of safety zone enforcement by a broadcast on VHF channel 16.

(c) *Regulations*. All persons are required to comply with the general regulations governing safety zones in 33 CFR 165.33 of this part.

(1) Recreational marine activities including but not limited to swimming, diving, and fishing are not permitted within the zone.

(2) All persons and vessels must transit through the safety zone one vessel at a time and may not engage in activity other than transit directly through the inlet unless otherwise authorized by the Captain of the Port or her representative.

(3) All persons or vessels wishing to transit through the safety zone more than one vessel at a time must request authorization to do so from the Captain of the Port or her representative 36 hours prior to the intended time of transit.

(4) Vessels granted permission to transit more than one vessel at a time must do so in accordance with the directions provided by the Captain of the Port or her representative to the vessel.

(5) To seek permission to transit the safety zone more than one vessel at a time, the Captain of the Port, or her representative, can be contacted via Sector Delaware Bay Command Center (215) 271–4940.

(6) This section applies to all persons and vessels wishing to transit through the Safety Zone except vessels that are engaged in the following operations:

(i) Enforcing laws;

(ii) Servicing aids to navigation; and

(iii) Emergency response vessels.

(7) Each person and vessel in a safety zone shall obey any direction or order of the Captain of the Port;

(8) No person may board, or take or place any article or thing on board, any vessel in a safety zone without the permission of the Captain of the Port.

(d) *Definitions*—(1) *Captain of the Port* means the Commander, Sector Delaware Bay, or any Coast Guard commissioned, warrant, or petty officer who has been authorized by the Captain of the Port to act on her behalf.

(e) *Enforcement*. The U.S. Coast Guard may be assisted in the patrol and enforcement of the safety zone by Federal, State, and local agencies.

EFFECTIVE DATE NOTE: By USCG–2014–0145, 79 FR 15694, Mar. 21, 2014, temporary § 165.T05–0145 was added, effective from Mar. 21, 2014 until Nov. 30, 2014.

§ 165.T05–0330 Safety Zone, Shallowbag Bay; Manteo, NC.

(a) *Definitions*. For the purposes of this section, Captain of the Port means the Commander, Sector North Carolina. *Representative* means any Coast Guard commissioned, warrant, or petty officer who has been authorized to act on the behalf of the Captain of the Port.

(b) *Location*. The following area is a safety zone: This safety zone will encompass all waters on Shallowbag Bay within a 200 yard radius of a barge anchor in position 35°54′31″ N, longitude 075°39′42″ W. All geographic coordinates are North American Datum 1983 (NAD 83).

(c) *Regulations*. (1) The general regulations contained in § 165.23 of this part

apply to the area described in paragraph (b) of this section.

(2) Persons or vessels requiring entry into or passage through any portion of the safety zone must first request authorization from the Captain of the Port, or a designated representative, unless the Captain of the Port previously announced via Marine Safety Radio Broadcast on VHF Marine Band Radio channel 22 (157.1 MHz) that this regulation will not be enforced in that portion of the safety zone. The Captain of the Port can be contacted at telephone number (910) 343–3882 or by radio on VHF Marine Band Radio, channels 13 and 16.

(d) *Enforcement*. The U.S. Coast Guard may be assisted in the patrol and enforcement of the zone by Federal, State, and local agencies.

(e) *Enforcement period*. This section will be enforced from 8 p.m. to 10 p.m. on October 4, 2013 unless cancelled earlier by the Captain of the Port.

[USCG–2013–0330, 78 FR 40396, July 5, 2013]

§ 165.T05–0494 Safety Zone, Atlantic Ocean; Ocean City, NJ.

(a) *Location*. The following area is a safety zone: A portion of the North Atlantic Ocean within a 500 yard radius of a fireworks barge located at position 39–16.22 N, 074–33.54 W.

(b) *Enforcement period*. This rule will be enforced from 9:10 p.m. to 10:20 p.m. on July 16, 2014, with a rain date scheduled for July 17, 2014, unless cancelled earlier by the Captain of the Port once all operations are completed.

(c) *Regulations*. All persons are required to comply with the general regulations governing safety zones in 33 CFR 165.33.

(1) All persons or vessels wishing to transit through the Safety Zone must request authorization to do so from the Captain of the Port or her designated representative one hour prior to the intended time of transit.

(2) Vessels granted permission to transit must do so in accordance with the directions provided by the Captain of the Port or her designated representative to the vessel.

(3) To seek permission to transit the Safety Zone, the Captain of the Port's representative can be contacted via marine radio VHF Channel 16.

(4) This section applies to all vessels wishing to transit through the Safety Zone except vessels that are engaged in the following operations:

(i) Enforcing laws;

(ii) Servicing aids to navigation, and

(iii) Emergency response vessels.

(5) No person or vessel may enter or remain in a safety zone without the permission of the Captain of the Port;

(6) Each person and vessel in a safety zone shall obey any direction or order of the Captain of the Port;

(7) No person may board, or take or place any article or thing on board, any vessel in a safety zone without the permission of the Captain of the Port; and

(8) No person may take or place any article or thing upon any waterfront facility in a safety zone without the permission of the Captain of the Port.

(d) *Definitions*. *The Captain of the Port* means the Commander of Sector Delaware Bay or any Coast Guard commissioned, warrant, or petty officer who has been authorized by the Captain of the Port to act on her behalf.

(e) *Enforcement*. The U.S. Coast Guard may be assisted in the patrol and enforcement of the Safety Zone by Federal, State, and local agencies.

EFFECTIVE DATE NOTE: By USCG–2014–0494, 79 FR 37209, July 1, 2014, temporary § 165.T05–0494 was added, effective from July 1, 2014 until July 17, 2014.

§ 165.T05–0495 Safety Zone, Sugar House Casino Fireworks Display, Delaware River; Philadelphia, PA.

(a) *Regulated area*. The following area is a safety zone: The safety zone will encompass all waters of the Delaware River within a 350 yard radius of the fireworks launch platform in approximate position 39°57′46.51″ N, 075°07′45.45″ W in Philadelphia, PA.

(b) *Regulations*. The general safety zone regulations found in 33 CFR 165.23 apply to the safety zone created by this temporary section § 165.T05–0495.

(1) All persons and vessels are prohibited from entering this zone, except as authorized by the Coast Guard Captain of the Port or her designated representative.

(2) All persons or vessels wishing to transit through the Safety Zone must request authorization to do so from the

Captain of the Port or her designated representative one hour prior to the intended time of transit.

(3) Vessels granted permission to transit through the Safety Zone must do so in accordance with the directions provided by the Captain of the Port or her designated representative to the vessel.

(4) To seek permission to transit this safety zone, the Captain of the Port or her designated representative can be contacted via Sector Delaware Bay Command Center (215) 271–4940.

(5) This section applies to all vessels wishing to transit through the safety zone except vessels that are engaged in the following operations: (i) Enforcing laws; (ii) servicing aids to navigation, and (iii) emergency response vessels.

(6) No person or vessel may enter or remain in a safety zone without the permission of the Captain of the Port;

(7) Each person and vessel in a safety zone shall obey any direction or order of the Captain of the Port;

(8) The Captain of the Port may take possession and control of any vessel in the safety zone;

(9) The Captain of the Port may remove any person, vessel, article, or thing from a safety zone;

(10) No person may board, or take or place any article or thing on board, any vessel in a safety zone without the permission of the Captain of the Port; and

(11) No person may take or place any article or thing upon any waterfront facility in a safety zone without the permission of the Captain of the Port.

(c) *Definitions.* (1) *Captain of the Port* means the Commander, Coast Guard Sector Delaware Bay, or any Coast Guard commissioned, warrant or petty officer who has been authorized by the Captain of the Port to act on her behalf.

(2) *Designated representative* means any Coast Guard commissioned, warrant or petty officer who has been authorized by the Captain of the Port Delaware Bay to assist in enforcing the safety zone described in paragraph (a) of this section.

(d) *Enforcement.* The U.S. Coast Guard may be assisted by Federal, State, and local agencies in the patrol and enforcement of the zone.

(e) *Enforcement period.* This section will be enforced from 8:30 p.m. until 10:00 p.m. on July 5, 2013.

[USCG–2013–0495, 78 FR 39603, July 2, 2013]

§ 165.T05–0511 Safety Zone, Delaware River; Philadelphia, PA.

(a) *Location.* The following area is a safety zone: All waters of the Delaware River in Chester, PA, inside a boundary encompassing all waters just south of the Commodore Barry Bridge within a 350 yard radius of the fireworks barge located at latitude 39°49′47.04″ N longitude 075°22′40.72″ W in Chester, PA.

(b) *Enforcement period.* This rule will be enforced from 9 p.m. to 10:15 p.m. on July 12, 2014, unless cancelled earlier by the Captain of the Port once all operations are completed.

(c) *Regulations.* All persons are required to comply with the general regulations governing safety zones in 33 CFR 165.33.

(1) All persons or vessels wishing to transit through the Safety Zone must request authorization to do so from the Captain of the Port or her designated representative one hour prior to the intended time of transit.

(2) Vessels granted permission to transit must do so in accordance with the directions provided by the Captain of the Port or her designated representative to the vessel.

(3) To seek permission to transit the Safety Zone, the Captain of the Port's representative can be contacted via marine radio VHF Channel 16.

(4) This section applies to all vessels wishing to transit through the Safety Zone except vessels that are engaged in the following operations:

(i) Enforcing laws;

(ii) Servicing aids to navigation, and

(iii) Emergency response vessels.

(5) No person or vessel may enter or remain in a safety zone without the permission of the Captain of the Port;

(6) Each person and vessel in a safety zone shall obey any direction or order of the Captain of the Port;

(7) No person may board, or take or place any article or thing on board, any vessel in a safety zone without the permission of the Captain of the Port; and

(8) No person may take or place any article or thing upon any waterfront

facility in a safety zone without the permission of the Captain of the Port.

(d) *Definitions*. The Captain of the Port means the Commander of Sector Delaware Bay or any Coast Guard commissioned, warrant, or petty officer who has been authorized by the Captain of the Port to act on her behalf.

(e) *Enforcement*. The U.S. Coast Guard may be assisted in the patrol and enforcement of the Safety Zone by Federal, State, and local agencies.

EFFECTIVE DATE NOTE: By USCG–2014–0511, 79 FR 37206, July 1, 2014, temporary § 165.T05–0511 was added, effective from July 1, 2014 until July 12, 2014.

§ 165.T05–0767 Security Zone, Baltimore Harbor, Baltimore's Inner Harbor; Baltimore, MD.

(a) *Location*. The following area is a security zone: all waters of Baltimore Harbor, Baltimore's Inner Harbor, from shoreline to shoreline, bounded on the east by a line drawn from position latitude 39°17′03.41″ N, longitude 076°36′28.35″ W southerly to position latitude 39°16′58.24″ N, longitude 076°36′27.59″ W, located along the waterfront at Baltimore, MD. All coordinates refer to datum NAD 1983.

(b) *Regulations*. The general security zone regulations found in 33 CFR 165.33 apply to the security zone created by this temporary § 165.T05.0767.

(1) All persons are required to comply with the general regulations governing security zones found in 33 CFR 165.33.

(2) Entry into or remaining in this zone is prohibited unless authorized by the Coast Guard Captain of the Port Baltimore. Vessels already at berth, mooring, or anchor at the time the security zone is implemented do not have to depart the security zone. All vessels underway within this security zone at the time it is implemented are to depart the zone.

(3) Persons desiring to transit the area of the security zone must first obtain authorization from the Captain of the Port Baltimore or his designated representative. To seek permission to transit the area, the Captain of the Port Baltimore and his designated representatives can be contacted at telephone number 410–576–2693 or on Marine Band Radio, VHF–FM channel 16 (156.8 MHz). The Coast Guard vessels enforcing this section can be contacted on Marine Band Radio, VHF–FM channel 16 (156.8 MHz). Upon being hailed by a U.S. Coast Guard vessel, or other Federal, State, or local agency vessel, by siren, radio, flashing light, or other means, the operator of a vessel shall proceed as directed. If permission is granted, all persons and vessels must comply with the instructions of the Captain of the Port Baltimore or his designated representative and proceed at the minimum speed necessary to maintain a safe course while within the zone.

(4) *Enforcement*. The U.S. Coast Guard may be assisted in the patrol and enforcement of the zone by Federal, State, and local agencies.

(c) *Definitions*. As used in this section:

Captain of the Port Baltimore means the Commander, U.S. Coast Guard Sector Baltimore, Maryland or any Coast Guard commissioned, warrant or petty officer who has been authorized by the Captain of the Port to act on his behalf.

Designated representative means any Coast Guard commissioned, warrant, or petty officer who has been authorized by the Captain of the Port Baltimore to assist in enforcing the security zone described in paragraph (a) of this section.

(d) *Effective period*. This rule is effective from 5 p.m. until 11:59 p.m. on September 5, 2013.

(e) *Enforcement period*. This section will be enforced from 5 p.m. until 11:59 p.m. on September 5, 2013.

[USCG–2013–0787, 78 FR 54394, Sept. 4, 2013]

§ 165.500 Safety/Security Zones; Chesapeake Bay, Maryland.

(a) *Definitions*. (1) Certain Dangerous Cargo (CDC) means a material defined in 33 CFR part 160.

(2) Liquefied Hazardous Gas (LHG) means a material defined in 33 CFR part 127.

(3) Liquefied Natural Gas (LNG) means a material defined in 33 CFR part 127.

(4) Cruise ship means a vessel defined as a ''passenger vessel'' in 46 U.S.C. 2101 (22).

(b) *Location*. The following areas are a safety/security zone: All waters of

the Chesapeake Bay and its tributaries, from surface to bottom, within a 500 yard radius around cruise ships and vessels transporting CDC, LNG, or LHG while transiting, anchored, or moored within the COTP Baltimore zone.

(c) *Regulations.* (1) The COTP will notify the maritime community of affected vessels and the periods during which the safety/security zones will be enforced by providing notice to mariners in accordance with 33 CFR 165.7.

(2) Entry into or remaining in this zone is prohibited unless authorized by the Coast Guard COTP, Baltimore, Maryland or his designated representative.

(3) Persons desiring to transit the area of the security zone may contact the COTP at telephone number 410–576–2693 or on VHF channel 16 (156.8 MHz) to seek permission to transit the area. If permission is granted, all persons and vessels must comply with the instructions of the COTP or his or her designated representative.

(d) *Authority.* In addition to 33 U.S.C. 1231, the authority for this section includes 50 U.S.C. 191.

[CDG05–03–008, 68 FR 43311, July 22, 2003]

§ 165.501 Chesapeake Bay entrance and Hampton Roads, VA and adjacent waters—Regulated Navigation Area.

(a) *Location.* The waters enclosed by the shoreline and the following lines are a Regulated Navigation Area:

(1) *Offshore zone.* A line drawn due East from the mean low water mark at the North Carolina and Virginia border at latitude 36°33′03″ N, longitude 75°52′00″ W, to the Territorial Seas boundary line at latitude 36°33′05″ N, longitude 75°36′51″ W, thence generally Northeastward along the Territorial Seas boundary line to latitude 38°01′39″ N, longitude 74°57′18″ W, thence due West to the mean low water mark at the Maryland and Virginia border at latitude 38°01′39″ N, longitude 75°14′30″ W, thence South along the mean low water mark on the Virginia coast, and eastward of the Colregs Demarcation Lines across Chincoteague Inlet, Assawoman Inlet, Gargathy Inlet, Metompkin Inlet, Wachapreague Inlet, Quinby Inlet, Great Machipongo Inlet, Sand Shoal Inlet, New Inlet, Ship Shoal Inlet and Little Inlet, to the Colregs Demarcation Line across the mouth of Chesapeake Bay, continuing south along the Virginia low water mark and eastward of the Colregs Demarcation Line across Rudee Inlet to the point of beginning. All positions reference NAD 83.

(2) *Inland zone.* The waters enclosed by the shoreline and the following lines:

(i) A line drawn across the entrance to Chesapeake Bay between Wise Point and Cape Charles Light, and then continuing to Cape Henry Light.

(ii) A line drawn across the Chesapeake Bay between Old Point Comfort Light and Cape Charles City Range ''A'' Rear Light.

(iii) A line drawn across the James River along the eastern side of U.S. Route 17 highway bridge, between Newport News and Isle of Wight County, Virginia.

(iv) A line drawn across Chuckatuck Creek along the northern side of the north span of the U.S. Route 17 highway bridge, between Isle of Wight County and Suffolk, Virginia.

(v) A line drawn across the Nansemond River along the northern side of the Mills Godwin (U.S. Route 17) Bridge, Suffolk, Virginia.

(vi) A line drawn across the mouth of Bennetts Creek, Suffolk, Virginia.

(vii) A line drawn across the Western Branch of the Elizabeth River along the eastern side of the West Norfolk Bridge, Portsmouth, Virginia.

(viii) A line drawn across the Southern Branch of the Elizabeth River along the northern side of the I–64 highway bridge, Chesapeake, Virginia.

(ix) A line drawn across the Eastern Branch of the Elizabeth River along the western side of the west span of the Campostella Bridge, Norfolk, Virginia.

(x) A line drawn across the Lafayette River along the western side of the Hampton Boulevard Bridge, Norfolk, Virginia.

(xi) A line drawn across Little Creek along the eastern side of the Ocean View Avenue (U.S. Route 60) Bridge, Norfolk, Virginia.

(xii) A line drawn across Lynnhaven Inlet along the northern side of Shore Drive (U.S. Route 60) Bridge, Virginia Beach, Virginia.

(b) *Definitions*. In this section:

CBBT means the Chesapeake Bay Bridge Tunnel.

Coast Guard Patrol Commander is a Coast Guard commissioned, warrant or petty officer who has been designated by the Commander, Coast Guard Sector Hampton Roads.

Designated representative of the Captain of the Port means a person, including the duty officer at the Coast Guard Sector Hampton Roads, the Joint Harbor Operations Center watchstander, or the Coast Guard or Navy Patrol Commander who has been authorized by the Captain of the Port to act on his or her behalf and at his or her request to carry out such orders and directions as needed. All patrol vessels shall display the Coast Guard Ensign at all times when underway.

I–664 Bridge Tunnel means the Monitor Merrimac Bridge Tunnel.

Inland waters means waters within the COLREGS Line of Demarcation.

Thimble Shoal Channel consists of the waters bounded by a line connecting Thimble Shoal Channel Lighted Bell Buoy 1TS, thence to Thimble Shoal Lighted Gong Buoy 17, thence to Thimble Shoal Lighted Buoy 19, thence to Thimble Shoal Lighted Buoy 21, thence to Thimble Shoal Lighted Buoy 22, thence to Thimble Shoal Lighted Buoy 18, thence to Thimble Shoal Lighted Buoy 2, thence to the beginning.

Thimble Shoal North Auxiliary Channel consists of the waters in a rectangular area 450 feet wide adjacent to the north side of Thimble Shoal Channel, the southern boundary of which extends from Thimble Shoal Channel Lighted Buoy 2 to Thimble Shoal Lighted Buoy 18.

Thimble Shoal South Auxiliary Channel consists of the waters in a rectangular area 450 feet wide adjacent to the south side of Thimble Shoal Channel, the northern boundary of which extends from Thimble Shoal Channel Lighted Bell Buoy 1TS, thence to Thimble Shoal Lighted Gong Buoy 17, thence to Thimble Shoal Lighted Buoy 19, thence to Thimble Shoal Lighted Buoy 21.

(c) *Applicability*. This section applies to all vessels operating within the Regulated Navigation Area, including naval and public vessels, except vessels that are engaged in the following operations:

(1) Law enforcement.

(2) Servicing aids to navigation.

(3) Surveying, maintenance, or improvement of waters in the Regulated Navigation Area.

(d) *Regulations*—(1) *Anchoring restrictions*. No vessel over 65 feet long may anchor or moor in the inland waters of the Regulated Navigation Area outside an anchorage designated in §110.168 of this title, with these exceptions:

(i) The vessel has the permission of the Captain of the Port.

(ii) Only in an emergency, when unable to proceed without endangering the safety of persons, property, or the environment, may a vessel anchor in a channel.

(iii) A vessel may not anchor within the confines of Little Creek Harbor, Desert Cove, or Little Creek Cove without the permission of the Captain of the Port. The Captain of the Port shall consult with the Commander, Naval Amphibious Base Little Creek, before granting permission to anchor within this area.

(2) *Anchoring detail requirements*. A self-propelled vessel over 100 gross tons, which is equipped with an anchor or anchors (other than a tugboat equipped with bow fenderwork of a type of construction that prevents an anchor being rigged for quick release), that is underway within two nautical miles of the CBBT or the I–664 Bridge Tunnel shall station its personnel at locations on the vessel from which they can anchor the vessel without delay in an emergency.

(3) *Secondary towing rig requirements on inland waters*. (i) A vessel over 100 gross tons may not be towed in the inland waters of the Regulated Navigation Area unless it is equipped with a secondary towing rig, in addition to its primary towing rig, that:

(A) Is of sufficient strength for towing the vessel.

(B) Has a connecting device that can receive a shackle pin of at least two inches in diameter.

(C) Is fitted with a recovery pickup line led outboard of the vessel's hull.

(ii) A tow consisting of two or more vessels, each of which is less than 100

gross tons, that has a total gross tonnage that is over 100 gross tons, shall be equipped with a secondary towing rig between each vessel in the tow, in addition to its primary towing rigs, while the tow is operating within this Regulated Navigation Area. The secondary towing rig must:

(A) Be of sufficient strength for towing the vessels.

(B) Have connecting devices that can receive a shackle pin of at least two inches in diameter.

(C) Be fitted with recovery pickup lines led outboard of the vessel's hull.

(4) *Thimble Shoals Channel controls.* (i) A vessel drawing less than 25 feet may not enter the Thimble Shoal Channel, unless the vessel is crossing the channel. Masters should consider the squat of their vessel based upon vessel design and environmental conditions. Channel crossings shall be made as perpendicular to the channel axis as possible.

(ii) Except when crossing the channel, a vessel in the Thimble Shoal North Auxiliary Channel shall proceed in a westbound direction.

(iii) Except when crossing the channel, a vessel in the Thimble Shoal South Auxiliary Channel shall proceed in an eastbound direction.

(5) *Restrictions on vessels with impaired maneuverability*—(i) *Before entry.* A vessel over 100 gross tons, whose ability to maneuver is impaired by heavy weather, defective steering equipment, defective main propulsion machinery, or other damage, may not enter the Regulated Navigation Area without the permission of the Captain of the Port.

(ii) *After entry.* A vessel over 100 gross tons, which is underway in the Regulated Navigation Area, that has its ability to maneuver become impaired for any reason, shall, as soon as possible, report the impairment to the Captain of the Port.

(6) *Requirements for navigation charts, radars, and pilots.* No vessel over 100 gross tons may enter the Regulated Navigation Area, unless it has on board:

(i) Corrected charts of the Regulated Navigation Area. Instead of corrected paper charts, warships or other vessels owned, leased, or operated by the United States Government and used only in government noncommercial service may carry electronic charting and navigation systems that have met the applicable agency regulations regarding navigation safety.

(ii) An operative radar during periods of reduced visibility;

(iii) When in inland waters, a pilot or other person on board with previous experience navigating vessels on the waters of the Regulated Navigation Area.

(7) *Emergency procedures.* (i) Except as provided in paragraph (d)(7)(ii) of this section, in an emergency any vessel may deviate from the regulations in this section to the extent necessary to avoid endangering the safety of persons, property, or the environment.

(ii) A vessel over 100 gross tons with an emergency that is located within two nautical miles of the CBBT or I–664 Bridge Tunnel shall notify the Captain of the Port of its location and the nature of the emergency, as soon as possible.

(8) *Vessel speed limits*—(i) *Little Creek.* A vessel may not proceed at a speed over five knots between the Route 60 bridge and the mouth of Fishermans Cove (Northwest Branch of Little Creek).

(ii) *Southern Branch of the Elizabeth River.* A vessel may not proceed at a speed over six knots between the junction of the Southern and Eastern Branches of the Elizabeth River and the Norfolk and Portsmouth Belt Line Railroad Bridge between Chesapeake and Portsmouth, Virginia.

(iii) *Norfolk Harbor Reach.* Nonpublic vessels of 300 gross tons or more may not proceed at a speed over 10 knots between the Elizabeth River Channel Lighted Gong Buoy 5 of Norfolk Harbor Reach (southwest of Sewells Point) at approximately 36°58′00″ N, 076°20′00″ W, and gated Elizabeth River Channel Lighted Buoys 17 and 18 of Craney Island Reach (southwest of Norfolk International Terminal at approximately 36°54′17″ N, and 076°20′11″ W.

(9) *Port security requirements.* Vessels in excess of 300 gross tons, including tug and barge combinations in excess of 300 gross tons (combined), shall not enter the Regulated Navigation Area, move within the Regulated Navigation Area, or be present within the Regulated Navigation Area, unless they

comply with the following requirements:

(i) Obtain authorization to enter the Regulated Navigation Area from the designated representative of the Captain of the Port prior to entry. All vessels entering or remaining in the Regulated Navigation Area may be subject to a Coast Guard boarding.

(ii) Ensure that no person who is not a permanent member of the vessel's crew, or a member of a Coast Guard boarding team, boards the vessel without a valid purpose and photo identification.

(iii) Report any departure from or movement within the Regulated Navigation Area to the designated representative of the Captain of the Port prior to getting underway.

(iv) The designated representative of the Captain of the Port is the Sector Command Center (SCC)—Joint Harbor Operations Center (JHOC) which shall be contacted on VHF–FM channel 12, or by calling (757) 668–5555.

(v) In addition to the authorities listed in this part, this paragraph is promulgated under the authority under 33 U.S.C. 1226.

(e) *Waivers.* (1) The Captain of the Port may, upon request, waive any regulation in this section.

(2) An application for a waiver must state the need for the waiver and describe the proposed vessel operations.

(f) *Control of vessels within the regulated navigation area.* (1) When necessary to prevent damage, destruction or loss of any vessel, facility or port infrastructure, the Captain of the Port may direct the movement of vessels or issue orders requiring vessels to anchor or moor in specific locations.

(2) If needed for the maritime, commercial or security interests of the United States, the Captain of the Port may order a vessel to move from the location in which it is anchored to another location within the Regulated Navigation Area.

(3) The master of a vessel within the Regulated Navigation Area shall comply with any orders or directions issued to the master's vessel by the Captain of the Port.

[CGD05–02–099, 68 FR 35175, June 12, 2003, as amended by USCG–2006–25150, 71 FR 39211, July 12, 2006]

§ 165.502 Safety and Security Zone; Cove Point Liquefied Natural Gas Terminal, Chesapeake Bay, Maryland.

(a) *Location.* The following area is a safety and security zone: All waters of the Chesapeake Bay, from surface to bottom, encompassed by lines connecting the following points, beginning at 38°24′27″ N, 76°23′42″ W, thence to 38°24′44″ N, 76°23′11″ W, thence to 38°23′55″ N, 76°22′27″ W, thence to 38°23′37″ N, 76°22′58″ W, thence to beginning at 38°24′27″ N, 76°23′42″ W. These coordinates are based upon North American Datum (NAD) 1983. This area is 500 yards in all directions from the Cove Point LNG terminal structure.

(b) *Regulations.* (1) In accordance with the general regulations in §§165.23 and 165.33 of this part, entry into or movement within this zone is prohibited unless authorized by the Coast Guard Captain of the Port, Baltimore, Maryland or his designated representative. Designated representatives include any Coast Guard commissioned, warrant, or petty officer.

(2) Persons desiring to transit the area of the zone may contact the Captain of the Port at telephone number (410) 576–2693 or via VHF Marine Band Radio Channel 16 (156.8 MHz) to seek permission to transit the area. If permission is granted, all persons and vessels must comply with the instructions of the Captain of the Port or his designated representative.

(c) *Enforcement.* The U.S. Coast Guard may be assisted in the patrol and enforcement of the zone by Federal, State, local, and private agencies.

[CGD05–03–023, 68 FR 75133, Dec. 30, 2003]

§ 165.503 Security Zone; Captain of the Port Hampton Roads Zone.

(a) *Definitions.* As used in this section—

Certain dangerous cargo or *CDC* means a material defined as CDC in 33 CFR 160.204.

Designated Representative of the Captain of the Port is any U.S. Coast Guard commissioned, warrant or petty officer who has been authorized by the Captain of the Port (COTP), Hampton Roads, Virginia to act on his or her behalf.

Passenger vessel means a vessel defined as a passenger vessel in 46 CFR part 70.

(b) *Location*. All navigable waters of the Captain of the Port Hampton Roads zone (defined in 33 CFR 3.25–10) within 500 yards around a passenger vessel or vessel carrying a CDC, while the passenger vessel or vessel carrying CDC is transiting, moored or anchored.

(c) *Regulations*. (1) No vessel may approach within 500 yards of a passenger vessel or vessel carrying a CDC within the Captain of the Port Hampton Roads zone, unless traveling at the minimum speed necessary to navigate safely.

(2) Under § 165.33, no vessel or person may approach within 100 yards of a passenger vessel or vessel carrying a CDC within the Captain of the Port Hampton Roads zone, unless authorized by the COTP Hampton Roads or his or her designated representative.

(3) The COTP Hampton Roads may notify the maritime and general public by marine information broadcast of the periods during which individual security zones have been activated by providing notice in accordance with 33 CFR 165.7.

(4) A security zone in effect around a moving or anchored vessel will be enforced by a law enforcement vessel. A security zone in effect around a moored vessel will be enforced by a law enforcement agent shoreside, a law enforcement vessel waterside, or both.

(5) Persons desiring to transit the area of the security zone within 100 yards of a passenger vessel or vessel carrying a CDC must contact the COTP Hampton Roads on VHF-FM channel 16 (156.8 MHz) or telephone number (757) 668–5555 or (757) 484–8192 to seek permission to transit the area. All persons and vessels must comply with the instructions of the COTP or the COTP's designated representative.

(d) *Enforcement*. The COTP will enforce these zones and may enlist the aid and cooperation of any Federal, state, county, or municipal law enforcement agency to assist in the enforcement of the regulation.

[CGD05–04–067, 69 FR 40769, July 7, 2004]

§ 165.504 Newport News Shipbuilding and Dry Dock Company Shipyard, James River, Newport News, Va.

(a) *Location*. The following is a security zone: The waters of the James River encompassed by a line beginning at the intersection of the shoreline with the northernmost property line of the Newport News Shipbuilding and Dry Dock Co. at latitude 37°00′38.1″ N, longitude 76°27′05.7″ W, thence southerly to latitude 36°59′58.4″ N, longitude 76°27′16.7″ W, thence southeasterly to latitude 36°59′23.0″ N, longitude 76°26′54.6″ W, thence westerly to latitude 36°59′21.5″ N, longitude 76°26′58.4″ W, thence southeasterly to latitude 36°59′12.9″ N, longitude 76°26′52.4″ W, thence easterly to latitude 36°59′14.2″ N, longitude 76°26′49.1″ W, thence southeasterly to latitude 36°58′37.8″ N, longitude 76°26′26.3″ W, thence easterly to latitude 36°58′43.5″ N, longitude 76°26′13.7″ W, thence northerly to the intersection of the shoreline with the southernmost property line of the Newport News Shipbuilding and Dry Dock Co. at latitude 36°58′48.0″ N, longitude 76°26′11.2″ W, thence northwesterly along the shoreline to the point of beginning.

(b) *Security zone anchorage*. The following is a security zone anchorage: The waters of the James River encompassed by a line beginning at the intersection of the shoreline with the northernmost property line of the Newport News Shipbuilding and Dry Dock Company shipyard at latitude 37°00′38.1″ N, longitude 76°27′05.7″ W, thence southerly to latitude 36°59′58.4″ N, longitude 76°27′16.7″ W, thence easterly to the shoreline at latitude 36°59′58.5″ N, longitude 76°27′11.6″ W, thence along the shoreline to the point of beginning.

(c) *Special regulations*. (1) Section 165.33 (a), (e), and (f) do not apply to the following vessels or individuals on board those vessels:

(i) Public vessels of the United States.

(ii) Public vessels owned or operated by the Commonwealth of Virginia or its subdivisions for law enforcement or firefighting purposes.

(iii) Vessels owned by, operated by, or under charter to Newport News Shipbuilding and Dry Dock Co.

(iv) Vessels that are performing work at Newport News Shipbuilding and Dry Dock Co., including the vessels of subcontractors and other vendors of Newport News Shipbuilding and Dry Dock Co. or other persons that have a contractual relationship with Newport News Shipbuilding and Dry Dock Co.

(v) Vessels that are being built, rebuilt, repaired, or otherwise worked on at or by Newport News Shipbuilding and Dry Dock Co. or another person authorized to perform work at the shipyard.

(vi) Vessels that are authorized by Newport News Shipbuilding and Dry Dock Company to moor at and use its facilities.

(vii) Commercial shellfish harvesting vessels taking clams from the shellfish beds within the zone, if

(A) The owner of the vessel has previously provided the Captain of the Port, Hampton Roads, Virginia, information about the vessel, including:

(*1*) The name of the vessel;

(*2*) The vessel's official number, if documented, or state number, if numbered by a state issuing authority;

(*3*) A brief description of the vessel, including length, color, and type of vessel;

(*4*) The name, Social Security number, current address, and telephone number of the vessel's master, operator, or person in charge; and

(*5*) Upon request, information the vessel's crew.

(B) The vessel is operated in compliance with any specific orders issued to the vessel by the Captain of the Port or other regulations controlling the operation of vessels within the security zone that may be in effect.

(d) *Enforcement*. The U.S. Coast Guard may be assisted in the enforcement of this zone by the U.S. Navy.

[CGD5 86–03, 51 FR 18322, May 19, 1986, as amended by CGD5 87–038, 52 FR 41996, Nov. 2, 1987]

§ 165.505 Security Zone; Calvert Cliffs Nuclear Power Plant, Chesapeake Bay, Calvert County, Maryland.

(a) *Location*. The following area is a security zone: All waters of the Chesapeake Bay, from surface to bottom, encompassed by lines connecting the following points, beginning at 38°26′06″ N, 076°26′18″ W, thence to 38°26′10″ N, 076°26′12″ W, thence to 38°26′21″ N, 076°26′28″ W, thence to 38°26′14″ N, 076°26′33″ W, thence to beginning at 38°26′06″ N, 076°26′18″ W. These coordinates are based upon North American Datum (NAD) 1983.

(b) *Regulations*. (1) Entry into or remaining in this zone is prohibited unless authorized by the Coast Guard Captain of the Port, Baltimore, Maryland.

(2) Persons desiring to transit the area of the security zone may contact the Captain of the Port at telephone number 410–576–2693 or on VHF channel 16 (156.8 MHz) to seek permission to transit the area. If permission is granted, all persons and vessels must comply with the instructions of the Captain of the Port or his or her designated representative.

(c)*Authority:* In addition to 33 U.S.C. 1231 and 50 U.S.C. 191, the authority for this section includes 33 U.S.C. 1226.

[CGD05–02–080, 68 FR 15053, Mar. 28, 2003]

§ 165.506 Safety Zones; Fireworks Displays in the Fifth Coast Guard District.

(a) *Regulations*. (1) The general regulations contained in 33 CFR 165.23 apply.

(2) The following regulations apply to the fireworks safety zones listed in the Table to § 165.506. These regulations will be enforced annually, for the duration of each fireworks event listed in the Table to § 165.506. In the case of inclement weather, the event may be conducted on the day following the date listed in the Table to § 165.506. Annual notice of the exact dates and times of the enforcement period of the regulation with respect to each safety zone, the geographical area, and other details concerning the nature of the fireworks event will be published in Local Notices to Mariners and via Broadcast Notice to Mariners over VHF–FM marine band radio.

(3) All persons and vessels shall comply with the instructions of the Coast Guard Captain of the Port or the designated on-scene-patrol personnel. Those personnel are comprised of commissioned, warrant, and petty officers of the U.S. Coast Guard. Other Federal, State and local agencies may assist

these personnel in the enforcement of the safety zone. Upon being hailed by a U.S. Coast Guard vessel by siren, radio, flashing light or other means, the operator of a vessel shall proceed as directed.

(b) *Notification*. (1) Fireworks barges and launch sites on land that operate within the regulated areas contained in the Table to §165.506 will have a sign affixed to the port and starboard side of the barge or mounted on a post 3 feet above ground level when on land immediately adjacent to the shoreline and facing the water labeled ''FIREWORKS—DANGER—STAY AWAY''. This will provide on scene notice that the safety zone will be enforced on that day. This notice will consist of a diamond shaped sign 4 feet by 4 feet with a 3-inch orange retro reflective border. The word ''DANGER'' shall be 10 inch black block letters centered on the sign with the words ''FIREWORKS'' and ''STAY AWAY'' in 6 inch black block letters placed above and below the word ''DANGER'' respectively on a white background.

(2) Coast Guard Captains of the Port in the Fifth Coast Guard District will notify the public of the enforcement of these safety zones by all appropriate means to effect the widest publicity among the affected segments of the public. Publication in the Local Notice to Mariners, marine information broadcasts, and facsimile broadcasts may be made for these events, beginning 24 to 48 hours before the event is scheduled to begin, to notify the public.

(c) *Contact information*. Questions about safety zones and related events should be addressed to the local Coast Guard Captain of the Port for the area in which the event is occurring. Contact information is listed below. For a description of the geographical area of each Coast Guard Sector—Captain of the Port zone, please see 33 CFR 3.25.

(1) Coast Guard Sector Delaware Bay—Captain of the Port Zone, Philadelphia, Pennsylvania: (215) 271–4944.

(2) Coast Guard Sector Baltimore—Captain of the Port Zone, Baltimore, Maryland: (410) 576–2525.

(3) Coast Guard Sector Hampton Roads—Captain of the Port Zone, Norfolk, Virginia: (757) 483–8567.

(4) Coast Guard Sector North Carolina—Captain of the Port Zone, Wilmington, North Carolina: (877) 229–0770 or (910) 772–2200.

(d) *Enforcement period*. The safety zones in the Table to §165.506 will be enforced from 5:30 p.m. to 1 a.m. each day a barge with a ''FIREWORKS—DANGER—STAY AWAY'' sign on the port and starboard side is on-scene or a ''FIREWORKS—DANGER—STAY AWAY'' sign is posted on land adjacent to the shoreline, in a location listed in the Table to §165.506. Vessels may not enter, remain in, or transit through the safety zones during these enforcement periods unless authorized by the Captain of the Port or designated Coast Guard patrol personnel on scene.

All coordinates listed in the Table to §165.506 reference Datum NAD 1983.

TABLE TO §165.506

[All coordinates listed in the Table to §165.506 reference Datum NAD 1983.]

No.	Date	Location	Regulated area
(a) Coast Guard Sector Delaware Bay—COTP Zone			
1	July 4th	North Atlantic Ocean, Bethany Beach, DE, Safety Zone.	The waters of the North Atlantic Ocean within a 500 yard radius of the fireworks barge in approximate position latitude 38°32′08″ N, longitude 075°03′15″ W, adjacent to shoreline of Bethany Beach, DE.
2	Labor Day	Indian River Bay, DE, Safety Zone.	All waters of the Indian River Bay within a 700 yard radius of the fireworks launch location on the pier in approximate position latitude 38°36′42″ N, longitude 075°08′18″ W.
3	July 4th	North Atlantic Ocean, Rehoboth Beach, DE, Safety Zone.	All waters of the North Atlantic Ocean within a 360 yard radius of the fireworks barge in approximate position latitude 38°43′01.2″ N, longitude 075°04′21″ W, approximately 400 yards east of Rehoboth Beach, DE.

TABLE TO § 165.506—Continued

[All coordinates listed in the Table to § 165.506 reference Datum NAD 1983.]

No.	Date	Location	Regulated area
4	July 4th	North Atlantic Ocean, Avalon, NJ, Safety Zone.	The waters of the North Atlantic Ocean within a 500 yard radius of the fireworks barge in approximate location latitude 39°06′19.5″ N, longitude 074°42′02.15″ W, in the vicinity of the shoreline at Avalon, NJ.
5	July 4th, or September 1st—2nd Saturday.	Barnegat Bay, Barnegat Township, NJ, Safety Zone.	The waters of Barnegat Bay within a 500 yard radius of the fireworks barge in approximate position latitude 39°44′50″ N, longitude 074°11′21″ W, approximately 500 yards north of Conklin Island, NJ.
6	July 4th	North Atlantic Ocean, Cape May, NJ, Safety Zone.	The waters of the North Atlantic Ocean within a 500 yard radius of the fireworks barge in approximate location latitude 38°55′36″ N, longitude 074°55′26″ W, immediately adjacent to the shoreline at Cape May, NJ.
7	July 3rd	Delaware Bay, North Cape May, NJ, Safety Zone.	All waters of the Delaware Bay within a 360 yard radius of the fireworks barge in approximate position latitude 38°58′00″ N, longitude 074°58′30″ W.
8	August—3rd Sunday	Great Egg Harbor Inlet, Margate City, NJ, Safety Zone.	All waters within a 500 yard radius of the fireworks barge in approximate location latitude 39°19′33″ N, longitude 074°31′28″ W, on the Intracoastal Waterway near Margate City, NJ.
9	July 4th; August every Thursday; September 1st Thursday.	Metedeconk River, Brick Township, NJ, Safety Zone.	The waters of the Metedeconk River within a 300 yard radius of the fireworks launch platform in approximate position latitude 40°03′24″ N, longitude 074°06′42″ W, near the shoreline at Brick Township, NJ.
10	July—1st Friday	North Atlantic Ocean, Atlantic City, NJ, Safety Zone.	The waters of the North Atlantic Ocean within a 500 yard radius of the fireworks barge located at latitude 39°20′58″ N, longitude 074°25′58″ W, near the shoreline at Atlantic City, NJ.
11	July 4th; October—1st or 2nd Saturday.	North Atlantic Ocean, Ocean City, NJ, Safety Zone.	The waters of the North Atlantic Ocean within a 500 yard radius of the fireworks barge in approximate location latitude 39°16′22″ N, longitude 074°33′54″ W, in the vicinity of the shoreline at Ocean City, NJ.
12	May—4th Saturday	Barnegat Bay, Ocean Township, NJ, Safety Zone.	All waters of Barnegat Bay within a 500 yard radius of the fireworks barge in approximate position latitude 39°47′33″ N, longitude 074°10′46″ W.
13	July 4th	Little Egg Harbor, Parker Island, NJ, Safety Zone.	All waters of Little Egg Harbor within a 500 yard radius of the fireworks barge in approximate position latitude 39°34′18″ N, longitude 074°14′43″ W, approximately 100 yards north of Parkers Island.
14	September—3rd Saturday	Delaware River, Chester, PA, Safety Zone.	All waters of the Delaware River near Chester, PA just south of the Commodore Barry Bridge within a 250 yard radius of the fireworks barge located in approximate position latitude 39°49′43.2″ N, longitude 075°22′42″ W.
15	September—3rd Saturday	Delaware River, Essington, PA, Safety Zone.	All waters of the Delaware River near Essington, PA, west of Little Tinicum Island within a 250 yard radius of the fireworks barge located in the approximate position latitude 39°51′18″ N, longitude 075°18′57″ W.
16	July 3rd, 4th or 5th; Columbus Day; December 31st, January 1st.	Delaware River, Philadelphia, PA, Safety Zone.	All waters of Delaware River, adjacent to Penns Landing, Philadelphia, PA, bounded from shoreline to shoreline, bounded on the south by a line running east to west from points along the shoreline at latitude 39°56′31.2″ N, longitude 075°08′28.1″ W; thence to latitude 39°56′29.1″ N, longitude 075°07′56.5″ W, and bounded on the north by the Benjamin Franklin Bridge.
(b) Coast Guard Sector Baltimore—COTP Zone			
1	April—1st or 2nd Saturday	Washington Channel, Upper Potomac River, Washington, DC, Safety Zone.	All waters of the Upper Potomac River within a 150 yard radius of the fireworks barge in approximate position latitude 38°52′20″ N, longitude 077°01′17″ W, located within the Washington Channel in Washington Harbor, DC.

TABLE TO § 165.506—Continued

[All coordinates listed in the Table to § 165.506 reference Datum NAD 1983.]

No.	Date	Location	Regulated area
2	July 4th; December—1st and 2nd Saturday; December 31st.	Severn River and Spa Creek, Annapolis, MD, Safety Zone.	All waters of the Severn River and Spa Creek within an area bounded by a line drawn from latitude 38°58′43.75″ N, longitude 076°28′01.42″ W; thence to latitude 38°58′21.14″ N, longitude 076°28′22.12″ W; thence to latitude 38°58′39.47″ N, longitude 076°28′48.72″ W; thence to latitude 38°58′53″ N, longitude 076°28′33.74″ W, thence to latitude 38°58′57.22″ N, longitude 076°28′39.83″ W, thence to latitude 38°59′02.15″ N, longitude 076°28′34.61″ W, thence to point of origin; located near the entrance to Spa Creek and Severn River, Annapolis, MD.
3	July—4th, or Saturday before or after Independence Day holiday.	Middle River, Baltimore County, MD, Safety Zone.	All waters of the Middle River within a 300 yard radius of the fireworks barge in approximate position latitude 39°17′45″ N, longitude 076°23′49″ W, approximately 300 yards east of Rockaway Beach, near Turkey Point.
4	June—last Saturday; July—3rd, 4th or last Saturday or Sunday.	Potomac River, Charles County, MD—Newburg, Safety Zone.	All waters of the Potomac River within a 200 yard radius of the fireworks barge in approximate position latitude 38°23′41″ N, longitude 076°59′30″ W, located near Newburg, Maryland.
5	June 14th; July 4th; September—2nd Saturday; December 31st.	Northwest Harbor (East Channel), Patapsco River, MD, Safety Zone.	All waters of the Patapsco River within a 300 yard radius of the fireworks barge in approximate position 39°15′55″ N, 076°34′33″ W, located adjacent to the East Channel of Northwest Harbor.
6	May—2nd or 3rd Thursday or Friday; July 4th; December 31st.	Baltimore Inner Harbor, Patapsco River, MD, Safety Zone.	All waters of the Patapsco River within a 100 yard radius of the fireworks barge in approximate position latitude 39°17′01″ N, longitude 076°36′31″ W, located at the entrance to Baltimore Inner Harbor, approximately 125 yards southwest of pier 3.
7	May—2nd or 3rd Thursday or Friday; July 4th; December 31st.	Baltimore Inner Harbor, Patapsco River, MD, Safety Zone.	The waters of the Patapsco River within a 100 yard radius of approximate position latitude 39°17′04″ N, longitude 076°36′36″ W, located in Baltimore Inner Harbor, approximately 125 yards southeast of pier 1.
8	July 4th; December 31st	Northwest Harbor (West Channel) Patapsco River, MD, Safety Zone.	All waters of the Patapsco River within a 300 yard radius of the fireworks barge in approximate position latitude 39°16′21″ N, longitude 076°34′38″ W, located adjacent to the West Channel of Northwest Harbor.
9	July—4th, or Saturday before or after Independence Day holiday.	Patuxent River, Calvert County, MD, Safety Zone.	All waters of the Patuxent River within a 200 yard radius of the fireworks barge located at latitude 38°19′17″ N, longitude 076°27′45″ W, approximately 800 feet from shore at Solomons Island, MD.
10	July 3rd	Chesapeake Bay, Chesapeake Beach, MD, Safety Zone.	All waters of the Chesapeake Bay within a 150 yard radius of the fireworks barge in approximate position latitude 38°41′36″ N, longitude 076°31′30″ W, and within a 150 yard radius of the fireworks barge in approximate position latitude 38°41′28″ N, longitude 076°31′29″ W, located near Chesapeake Beach, Maryland.
11	July 4th	Choptank River, Cambridge, MD, Safety Zone.	All waters of the Choptank River within a 300 yard radius of the fireworks launch site at Great Marsh Point, located at latitude 38°35′06″ N, longitude 076°04′46″ W.
12	July—2nd or 3rd Saturday and last Saturday.	Potomac River, Fairview Beach, Charles County, MD, Safety Zone.	All waters of the Potomac River within a 300 yard radius of the fireworks barge in approximate position latitude 38°19′57″ N, longitude 077°14′40″ W, located north of the shoreline at Fairview Beach, Virginia.
13	May—last Saturday; July 4th.	Potomac River, Charles County, MD—Mount Vernon, Safety Zone.	All waters of the Potomac River within an area bound by a line drawn from the following points: Latitude 38°42′30″ N, longitude 077°04′47″ W; thence to latitude 38°42′18″ N, longitude 077°04′42″ W; thence to latitude 38°42′11″ N, longitude 077°05′10″ W; thence to latitude 38°42′22″ N, longitude 077°05′12″ W; thence to point of origin located along the Potomac River shoreline at George Washington's Mount Vernon Estate, Fairfax County, VA.

TABLE TO § 165.506—Continued

[All coordinates listed in the Table to § 165.506 reference Datum NAD 1983.]

No.	Date	Location	Regulated area
14	October—1st Saturday	Dukeharts Channel, Potomac River, MD, Safety Zone.	All waters of the Potomac River within a 300 yard radius of the fireworks barge in approximate position latitude 38°13′27″ N, longitude 076°44′48″ W, located adjacent to Dukeharts Channel near Coltons Point, Maryland.
15	July—day before Independence Day holiday and July 4th; November—3rd Thursday, 3rd Saturday and last Friday. December—1st, 2nd and 3rd Friday.	Potomac River, National Harbor, MD, Safety Zone.	All waters of the Potomac River within an area bound by a line drawn from the following points: Latitude 38°47′13″ N, longitude 077°00′58″ W; thence to latitude 38°46′51″ N, longitude 077°01′15″ W; thence to latitude 38°47′25″ N, longitude 077°01′33″ W; thence to latitude 38°47′32″ N, longitude 077°01′08″ W; thence to the point of origin, located at National Harbor, Maryland.
16	Sunday before July 4th, July 4th.	Susquehanna River, Havre de Grace, MD, Safety Zone.	All waters of the Susquehanna River within a 300 yard radius of approximate position latitude 39°32′06″ N, longitude 076°05′22″ W, located on the island at Millard Tydings Memorial Park.
17	June and July—Saturday before Independence Day holiday.	Miles River, St. Michaels, MD, Safety Zone.	All waters of the Miles River within a 200 yard radius of approximate position latitude 38°47′42″ N, longitude 076°12′51″ W, located at the entrance to Long Haul Creek.
18	July 3rd	Tred Avon River, Oxford, MD, Safety Zone.	All waters of the Tred Avon River within a 150 yard radius of the fireworks barge in approximate position latitude 38°41′24″ N, longitude 076°10′37″ W, approximately 500 yards northwest of the waterfront at Oxford, MD.
19	July 3rd	Northeast River, North East, MD, Safety Zone.	All waters of the Northeast River within a 300 yard radius of the fireworks barge in approximate position latitude 39°35′26″ N, longitude 075°57′00″ W, approximately 400 yards south of North East Community Park.
20	June—2nd or 3rd Saturday; July—1st, 2nd or 3rd Saturday; September—1st or 2nd Saturday; December 31st.	Upper Potomac River, Washington, DC, Safety Zone.	All waters of the Upper Potomac River within a 300 yard radius of the fireworks barge in approximate position 38°48′40″ N, 077°02′07″ W, located near the waterfront of Alexandria, Virginia.
21	March through October, at the conclusion of evening MLB games at Washington Nationals Ball Park.	Anacostia River, Washington, DC, Safety Zone.	All waters of the Anacostia River within a 150 yard radius of the fireworks barge in approximate position latitude 38°52′13″ N, longitude 077°00′16″ W, located near the Washington Nationals Ball Park.
22	June—last Saturday or July—1st Saturday; July—3rd, 4th or last Saturday or Sunday.	Potomac River, Prince William County, VA, Safety Zone.	All waters of the Potomac River within a 200 yard radius of the fireworks barge in approximate position latitude 38°34′10″ N, longitude 077°15′36″ W, located near Cherry Hill, Virginia.
23	July 4th	North Atlantic Ocean, Ocean City, MD, Safety Zone.	All waters of the North Atlantic Ocean in an area bound by the following points: Latitude 38°19′39.9″ N, longitude 075°05′03.2″ W; thence to latitude 38°19′36.7″ N, longitude 075°04′53.5″ W; thence to latitude 38°19′45.6″ N, longitude 075°04′49.3″ W; thence to latitude 38°19′49.1″ N, longitude 075°05′00.5″ W; thence to point of origin. The size of the safety zone extends approximately 300 yards offshore from the fireworks launch area located at the high water mark on the beach.
24	May—Sunday before Memorial Day (observed). June 29th; July 4th and July every Sunday. August—1st Sunday and Sunday before Labor Day (observed).	Isle of Wight Bay, Ocean City, MD, Safety Zone.	All waters of Isle of Wight Bay within a 200 yard radius of the fireworks barge in approximate position latitude 38°22′31″ N, longitude 075°04′34″ W.
25	July 4th	Assawoman Bay, Fenwick Island—Ocean City, MD, Safety Zone.	All waters of Assawoman Bay within a 360 yard radius of the fireworks launch location on the pier at the West end of Northside Park, in approximate position latitude 38°25′55″ N, longitude 075°03′53″ W.

TABLE TO § 165.506—Continued

[All coordinates listed in the Table to § 165.506 reference Datum NAD 1983.]

No.	Date	Location	Regulated area
26	July 4th; December 31st	Baltimore Harbor, Baltimore Inner Harbor, MD, Safety Zone.	All waters of Baltimore Harbor, Patapsco River, within a 280 yard radius of a fireworks barge in approximate position latitude 39°16′36.7″ N, longitude 076°35′53.8″ W, located northwest of the Domino Sugar refinery wharf at Baltimore, Maryland.
(c) Coast Guard Sector Hampton Roads—COTP Zone			
1	July 4th	Linkhorn Bay, Virginia Beach, VA, Safety Zone.	All waters of the Linkhorn Bay within a 400 yard radius of the fireworks display in approximate position latitude 36°52′20″ N, longitude 076°00′38″ W, located near the Cavalier Golf and Yacht Club, Virginia Beach, Virginia.
2	September—last Friday or October—1st Friday.	York River, West Point, VA, Safety Zone.	All waters of the York River near West Point, VA within a 400 yard radius of the fireworks display located in approximate position latitude 37°31′25″ N, longitude 076°47′19″ W.
3	July 4th	York River, Yorktown, VA, Safety Zone.	All waters of the York River within a 400 yard radius of the fireworks display in approximate position latitude 37°14′14″ N, longitude 076°30′02″ W, located near Yorktown, Virginia.
4	July 4th, July 5th, July 6th, or July 7th.	James River, Newport News, VA, Safety Zone.	All waters of the James River within a 325 yard radius of the fireworks barge in approximate position latitude 36°58′30″ N, longitude 076°26′19″ W, located in the vicinity of the Newport News Shipyard, Newport News, Virginia.
5	June—4th Friday; July—1st Friday; July 4th.	Chesapeake Bay, Norfolk, VA, Safety Zone.	All waters of the Chesapeake Bay within a 400 yard radius of the fireworks display located in position latitude 36°57′21″ N, longitude 076°15′00″ W, located near Ocean View Fishing Pier.
6	July 4th or 5th	Chesapeake Bay, Virginia Beach, VA, Safety Zone.	All waters of the Chesapeake Bay 400 yard radius of the fireworks display in approximate position latitude 36°55′02″ N, longitude 076°03′27″ W, located at the First Landing State Park at Virginia Beach, Virginia.
7	July 4th; December 31st, January—1st.	Elizabeth River, Southern Branch, Norfolk, VA, Safety Zone.	All waters of the Elizabeth River Southern Branch in an area bound by the following points: Latitude 36°50′54.8″ N, longitude 076°18′10.7″ W; thence to latitude 36°51′7.9″ N, longitude 076°18′01″ W; thence to latitude 36°50′45.6″ N, longitude 076°17′44.2″ W; thence to latitude 36°50′29.6″ N, longitude 076°17′23.2″ W; thence to latitude 36°50′7.7″ N, longitude 076°17′32.3″ W; thence to latitude 36°49′58″ N, longitude 076°17′28.6″ W; thence to latitude 36°49′52.6″ N, longitude 076°17′43.8″ W; thence to latitude 36°50′27.2″ N, longitude 076°17′45.3″ W thence to the point of origin.
8	July—3rd Saturday	John H. Kerr Reservoir, Clarksville, VA, Safety Zone.	All waters of John H. Kerr Reservoir within a 400 yard radius of approximate position latitude 36°37′51″ N, longitude 078°32′50″ W, located near the center span of the State Route 15 Highway Bridge.
9	June, July, August, September, and October—every Wednesday, Friday, Saturday and Sunday. July 4th.	North Atlantic Ocean, Virginia Beach, VA, Safety Zone. A.	All waters of the North Atlantic Ocean within a 1000 yard radius of the center located near the shoreline at approximate position latitude 36°51′12″ N, longitude 075°58′06″ W, located off the beach between 17th and 31st streets.
10	September—last Saturday or October—1st Saturday.	North Atlantic Ocean, VA Beach, VA, Safety Zone. B.	All waters of the North Atlantic Ocean within a 350 yard radius of approximate position latitude 36°50′35″ N, longitude 075°58′09″ W, located on the 14th Street Fishing Pier.
11	Friday, Saturday and Sunday Labor Day Weekend.	North Atlantic Ocean, VA Beach, VA, Safety Zone. C.	All waters of the North Atlantic Ocean within a 350 yard radius of approximate position latitude 36°49′55″ N, longitude 075°58′00″ W, located off the beach between 2nd and 6th streets.
12	July 4th	Nansemond River, Suffolk, VA, Safety Zone.	All waters of the Nansemond River within a 350 yard radius of approximate position latitude 36°44′27″ N, longitude 076°34′42″ W, located near Constant's Wharf in Suffolk, VA.

TABLE TO § 165.506—Continued

[All coordinates listed in the Table to § 165.506 reference Datum NAD 1983.]

No.	Date	Location	Regulated area
13	July 4th	Chickahominy River, Williamsburg, VA, Safety Zone.	All waters of the Chickahominy River within a 400 yard radius of the fireworks display in approximate position latitude 37°14′50″ N, longitude 076°52′17″ W, near Barrets Point, Virginia.
14	July—3rd, 4th and 5th	Great Wicomico River, Mila, VA, Safety Zone.	All waters of the Great Wicomico River located within a 420 foot radius of the fireworks display at approximate position latitude 37°50′31″ N, longitude 076°19′42″ W near Mila, Virginia.
15	July—1st Friday, Saturday and Sunday.	Cockrell's Creek, Reedville, VA, Safety Zone.	All waters of Cockrell's Creek located within a 420 foot radius of the fireworks display at approximate position latitude 37°49′54″ N, longitude 076°16′44″ W near Reedville, Virginia.
16	May—last Sunday	James River, Richmond, VA, Safety Zone.	All waters of the James River located within a 420 foot radius of the fireworks display at approximate position latitude 37°31′13.1″ N, longitude 077°25′07.84″ W near Richmond, Virginia.
17	June—last Saturday	Rappahannock River, Tappahannock, VA, Safety Zone.	All waters of the Rappahannock River located within a 400 foot radius of the fireworks display at approximate position latitude 37°55′12.0″ N, longitude 076°49′12.0″ W near Tappahannock, Virginia.
18	July 4th	Cape Charles Harbor, Cape Charles, VA, Safety Zone.	All waters of Cape Charles Harbor located within a 375 foot radius of the fireworks display at approximate position latitude 37°15′46.5″ N, longitude 076°01′30.3″ W near Cape Charles, Virginia.
19	July 3rd or 4th	Pagan River, Smithfield, VA, Safety Zone.	All waters of the Pagan River located within a 420 foot radius of the fireworks display at approximate position latitude 36°59′18.0″ N, longitude 076°37′45.0″ W near Smithfield, Virginia.
20	July 4th	Sandbridge Shores, Virginia Beach, VA, Safety Zone.	All waters of Sandbridge Shores located within a 300 foot radius of the fireworks display at approximate position latitude 36°43′24.9″ N, longitude 075°56′24.9″ W near Virginia Beach, Virginia.
21	July 4th, 5th or 6th	Chesapeake Bay, Virginia Beach, VA, Safety Zone.	All waters of Chesapeake Bay located within a 600 foot radius of the fireworks display at approximate position latitude 36°54′58.18″ N, longitude 076°06′44.3″ W near Virginia Beach, Virginia.
(d) Coast Guard Sector North Carolina—COTP Zone			
1	July 4th; October—1st Saturday.	Morehead City Harbor Channel, NC, Safety Zone.	All waters of the Morehead City Harbor Channel that fall within a 360 yard radius of latitude 34°43′01″ N, longitude 076°42′59.6″ W, a position located at the west end of Sugar Loaf Island, NC.
2	April—2nd Saturday; July 4th; August—3rd Monday; October—1st Saturday.	Cape Fear River, Wilmington, NC, Safety Zone.	All waters of the Cape Fear River within an area bound by a line drawn from the following points: Latitude 34°13′54″ N, longitude 077°57′06″ W; thence northeast to latitude 34°13′57″ N, longitude 077°57′05″ W; thence north to latitude 34°14′11″ N, longitude 077°57′07″ W; thence northwest to latitude 34°14′22″ N, longitude 077°57′19″ W; thence east to latitude 34°14′22″ N, longitude 077°57′06″ W; thence southeast to latitude 34°14′07″ N, longitude 077°57′00″ W; thence south to latitude 34°13′54″ N, longitude 077°56′58″ W; thence to the point of origin, located approximately 500 yards north of Cape Fear Memorial Bridge.
3	July 1st Saturday and July 4th.	Green Creek and Smith Creek, Oriental, NC, Safety Zone.	All waters of Green Creek and Smith Creek that fall within a 300 yard radius of the fireworks launch site at latitude 35°01′29.6″ N, longitude 076°42′10.4″ W, located near the entrance to the Neuse River in the vicinity of Oriental, NC.
4	July 4th	Pasquotank River, Elizabeth City, NC, Safety Zone.	All waters of the Pasquotank River within a 300 yard radius of the fireworks launch barge in approximate position latitude 36°17′47″ N, longitude 076°12′17″ W, located approximately 400 yards north of Cottage Point, NC.
5	July 4th, or July 5th	Currituck Sound, Corolla, NC, Safety Zone.	All waters of the Currituck Sound within a 300 yard radius of the fireworks launch site in approximate position latitude 36°22′23.8″ N, longitude 075°49′56.3″, located near Whale Head Bay.

TABLE TO § 165.506—Continued

[All coordinates listed in the Table to § 165.506 reference Datum NAD 1983.]

No.	Date	Location	Regulated area
6	July 4th; November—3rd Saturday.	Middle Sound, Figure Eight Island, NC, Safety Zone.	All waters of the Figure Eight Island Causeway Channel from latitude 34°16′32″ N, longitude 077°45′32″ W, thence east along the marsh to a position located at latitude 34°16′19″ N, longitude 077°44′55″ W, thence south to the causeway at position latitude 34°16′16″ N, longitude 077°44′58″ W, thence west along the shoreline to position latitude 34°16′29″ N, longitude 077°45′34″ W, thence back to the point of origin.
7	June—2nd Saturday; July 4th.	Pamlico River, Washington, NC, Safety Zone.	All waters of Pamlico River and Tar River within a 300 yard radius of latitude 35°32′25″ N, longitude 077°03′42″ W, a position located on the southwest shore of the Pamlico River, Washington, NC.
8	July 4th	Neuse River, New Bern, NC, Safety Zone.	All waters of the Neuse River within a 360 yard radius of the fireworks barge in approximate position latitude 35°06′07.1″ N, longitude 077°01′35.8″ W; located 420 yards north of the New Bern, Twin Span, high-rise bridge.
9	July 4th	Edenton Bay, Edenton, NC, Safety Zone.	All waters within a 300 yard radius of position latitude 36°03′04″ N, longitude 076°36′18″ W, approximately 150 yards south of the entrance to Queen Anne Creek, Edenton, NC.
10	July 4th; November—Saturday following Thanksgiving Day.	Motts Channel, Banks Channel, Wrightsville Beach, NC, Safety Zone.	All waters of Motts Channel within a 500 yard radius of the fireworks launch site in approximate position latitude 34°12′29″ N, longitude 077°48′27″ W, approximately 560 yards south of Sea Path Marina, Wrightsville Beach, NC.
11	July 4th	Cape Fear River, Southport, NC, Safety Zone.	All waters of the Cape Fear River within a 600 yard radius of the fireworks barge in approximate position latitude 33°54′40″ N, longitude 078°01′18″ W, approximately 700 yards south of the waterfront at Southport, NC.
12	July 4th	Big Foot Slough, Ocracoke, NC, Safety Zone.	All waters of Big Foot Slough within a 300 yard radius of the fireworks launch site in approximate position latitude 35°06′54″ N, longitude 075°59′24″ W, approximately 100 yards west of the Silver Lake Entrance Channel at Ocracoke, NC.
13	August—1st Tuesday	New River, Jacksonville, NC, Safety Zone.	All waters of the New River within a 300 yard radius of the fireworks launch site in approximate position latitude 34°44′45″ N, longitude 077°26′18″ W, approximately one half mile south of the Hwy 17 Bridge, Jacksonville, North Carolina.
14	July 4th	Pantego Creek, Belhaven, NC, Safety Zone.	All waters on the Pantego Creek within a 600 foot radius of the launch site on land at position 35°32′35″ N, 076°37′46″ W.
15	July 4th	Atlantic Intracoastal Waterway, Swansboro, NC, Safety Zone.	All waters of the Atlantic Intracoastal Waterway within a 300 yard radius of approximate position latitude 34°41′02″ N, longitude 077°07′04″ W, located on Pelican Island.

[USCG–2011–0118, 77 FR 16932, Mar. 23, 2012, as amended by USCG–2012–0970, 78 FR 29641, May 21, 2013; USCG–2013–0251, 78 FR 73441, Dec. 6, 2013; USCG–2014–0095, 79 FR 30037, May 27, 2014]

§ 165.507 Security Zone; Chesapeake Bay, between Sandy Point and Kent Island, MD.

(a) *Definitions.* The *Captain of the Port, Baltimore, Maryland* means the Commander, Coast Guard Sector Baltimore, Maryland or any Coast Guard commissioned, warrant, or petty officer who has been authorized by the Captain of the Port, Baltimore, Maryland to act on his or her behalf.

(b) *Location.* The following area is a security zone: All waters of the Chesapeake Bay, from the surface to the bottom, within 250 yards north of the north (westbound) span of the William P. Lane Jr. Memorial Bridge, and 250 yards south of the south (eastbound) span of the William P. Lane Jr. Memorial Bridge, from the western shore at Sandy Point to the eastern shore at Kent Island, Maryland.

(c) *Regulations.* (1) All persons are required to comply with the general regulations governing security zones found in § 165.33 of this part.

(2) Entry into or remaining in this zone is prohibited unless authorized by the Coast Guard Captain of the Port, Baltimore, Maryland.

(3) Persons or vessels requiring entry into or passage through the security zone must first request authorization from the Captain of the Port, Baltimore to seek permission to transit the area. The Captain of the Port, Baltimore, Maryland can be contacted at telephone number (410) 576–2693. The Coast Guard vessels enforcing this section can be contacted on VHF Marine Band Radio, VHF channel 16 (156.8 MHz). Upon being hailed by a U.S. Coast Guard vessel by siren, radio, flashing light, or other means, the operator of a vessel shall proceed as directed. If permission is granted, all persons and vessels must comply with the instructions of the Captain of the Port, Baltimore, Maryland and proceed at the minimum speed necessary to maintain a safe course while within the zone.

(d) *Enforcement.* The U.S. Coast Guard may be assisted in the patrol and enforcement of the zone by Federal, State, and local agencies.

(e) *Enforcement period.* This section will be enforced annually on the first Sunday in May from 7 a.m. to 5 p.m. local time.

[CGD05–06–104, 72 FR 14422, Mar. 28, 2007]

§ 165.508 Security Zone; Georgetown Channel, Potomac River, Washington, DC.

(a) *Definitions.* (1) The *Captain of the Port, Baltimore, Maryland* means the Commander, Coast Guard Sector Baltimore, Maryland or any Coast Guard commissioned, warrant, or petty officer who has been authorized by the Captain of the Port, Baltimore, Maryland to act on his or her behalf.

(b) *Location.* The following area is a security zone: All waters of the Georgetown Channel of the Potomac River, from the surface to the bottom, 75 yards from the eastern shore measured perpendicularly to the shore, between the Long Railroad Bridge (the most eastern bridge of the 5-span, Fourteenth Street Bridge Complex) to the Theodore Roosevelt Memorial Bridge and all waters in between, totally including the waters of the Georgetown Channel Tidal Basin.

(c) *Regulations.* (1) All persons are required to comply with the general regulations governing security zones found in § 165.33 of this part.

(2) Entry into or remaining in this zone is prohibited unless authorized by the Coast Guard Captain of the Port, Baltimore, Maryland.

(3) Persons or vessels requiring entry into or passage through the security zone must first request authorization from the Captain of the Port, Baltimore to seek permission to transit the area. The Captain of the Port, Baltimore, Maryland can be contacted at telephone number (410) 576–2693. The Coast Guard vessels enforcing this section can be contacted on VHF Marine Band Radio, VHF channel 16 (156.8 MHz). Upon being hailed by a U.S. Coast Guard vessel by siren, radio, flashing light, or other means, the operator of a vessel shall proceed as directed. If permission is granted, all persons and vessels must comply with the instructions of the Captain of the Port, Baltimore, Maryland and proceed at the minimum speed necessary to maintain a safe course while within the zone.

(d) *Enforcement.* The U.S. Coast Guard may be assisted in the patrol and enforcement of the zone by Federal, State, and local agencies.

(e) *Enforcement period.* This section will be enforced from 12:01 a.m. to 11:59 p.m. local time annually on July 4.

[CGD05–06–105, 72 FR 15836, Apr. 3, 2007]

§ 165.509 Security Zone; Severn River and College Creek, Annapolis, MD.

(a) *Definitions.* For purposes of this section, the *Captain of the Port, Baltimore, Maryland* means the Commander, Coast Guard Sector Baltimore, Maryland or any Coast Guard commissioned, warrant, or petty officer who has been authorized by the Captain of the Port, Baltimore, Maryland to act on his or her behalf.

(b) *Location.* The following area is a security zone: All waters of the Severn River, from shoreline to shoreline,

bounded by a line drawn from Horseshoe Point, at 38°59′47.6″ N, 076°29′33.2″ W; eastward across the Severn river to a point located at 39°00′01.5″ N, 076°29′08.5″ W; and a line drawn from Biemans Point, at 38°59′14.4″ N, 076°28′30.1″ W; westward across the Severn River to a point 38°59′03.5″ N, 076°28′50.0″ W, located on the Naval Academy waterfront. This security zone includes the waters of College Creek eastward of the King George Street Bridge (NAD 1983).

(c) *Regulations*. (1) The general regulations governing security zones found in § 165.33 apply to the security zone described in paragraph (b) of this section.

(2) Entry into or remaining in this zone is prohibited unless authorized by the Coast Guard Captain of the Port, Baltimore, Maryland.

(3) Persons or vessels requiring entry into or passage through the security zone must first request authorization from the Captain of the Port, Baltimore to seek permission to transit the area. The Captain of the Port, Baltimore, Maryland can be contacted at telephone number (410) 576–2693. The Coast Guard vessels enforcing this section can be contacted on Marine Band Radio VHF channel 16 (156.8 MHz). Upon being hailed by a U.S. Coast Guard vessel by siren, radio, flashing light, or other means, the operator of a vessel shall proceed as directed. If permission is granted, all persons and vessels must comply with the instructions of the Captain of the Port, Baltimore, Maryland and proceed at the minimum speed necessary to maintain a safe course while within the zone.

(d) *Enforcement*. The U.S. Coast Guard may be assisted in the patrol and enforcement of the zone by Federal, State, and local agencies.

(e) *Enforcement period*. This section will be enforced annually on the Friday before the Memorial Day holiday in May from 7:30 a.m. to 2 p.m. local time.

[CGD05–06–112, 72 FR 24188, May 2, 2007]

§ 165.510 Delaware Bay and River, Salem River, Christina River and Schuylkill River-Regulated Navigation Area.

(a) *Regulated Navigation Area*. The following is a Regulated Navigation Area: The navigable waters of Delaware Bay and River, Salem River, Christina River, and Schuylkill River, in an area bounded on the south by a line drawn across the entrance to the Delaware Bay between Cape May Light and Harbor of Refuge Light and then continuing to the northernmost extremity of Cape Henlopen, and bounded on the north by a line drawn across the Delaware River between Trenton, NJ and Morrisville, PA along the southern side of the U.S. Route 1 Bridge.

(b) *Definitions*. As used in this section:

COTP means the Captain of the Port, Delaware Bay and any Coast Guard commissioned, warrant or petty officer who has been authorized by the COTP to act on his or her behalf.

Dangerous Cargo means those cargoes listed in § 160.203 of this chapter when carried in bulk, but does not include cargoes listed in table 1 of 46 CFR part 153.

Underway means that a vessel is not at anchor, made fast to the shore, or aground.

(c) *Applicability*. This section applies to any vessel operating within the Regulated Navigation Area, including a naval or public vessel, except a vessel engaged in:

(1) Law enforcement;

(2) Servicing aids to navigation; or

(3) Surveying, maintaining, or improving waters within the Regulated Navigation Area.

(d) *Draft limitation*. Unless otherwise authorized by the COTP, no vessel with a draft greater than 55 feet may enter this regulated navigation area.

NOTE: The project depth in many areas of the Regulated Navigation Area is less than 55 feet.

(e) *Oil transfer operations*. Unless otherwise authorized by the COTP, no vessel to vessel oil transfer operations, excluding bunkering, may be conducted within the area between the southern boundary of this regulated navigation area and the southern span of the Delaware Memorial Bridge except within the anchorage ground designated in 110.157(a)(1) of this chapter.

(f) *Requirements for vessels carrying dangerous cargoes*. The master, owner, or operator of a vessel carrying a dangerous cargo shall:

(1) Notify the COTP at least 72 hours before the vessel enters or departs the regulated navigation area and at least 12 hours before the vessel moves within the regulated navigation area. The notice must include a report of the vessel's propulsion and machinery status and, for foreign flag vessels, the notice must include any outstanding deficiencies identified by the vessel's flag state or classification society;

(2) Not enter, get or remain underway within the regulated navigation area if visibility is or is expected to be less than two (2) miles. If during the transit visibility becomes less than two (2) miles, the vessel must seek safe anchorage and notify the COTP immediately;

(3) Not anchor in any area within the regulated navigation area unless in times of emergency or with COTP permission;

(4) Not transfer dangerous cargo while the vessel is at anchor or bunkering;

(5) Maintain a manned watch in the steering compartment whenever the vessel is underway within the regulated navigation area unless the vessel has two separate and independent steering control systems with duplicate pilothouse steering gear control systems which meet the requirements of 46 CFR 58.25–70;

(6) When anchored within the regulated navigation area and:

(i) Sustained winds are greater than 25 knots but less than 40 knots, ensure the main engines are ready to provide full power in five minutes or less; and

(ii) Sustained winds are 40 knots or over, ensure that the main engines are on line to immediately provide propulsion;

(7) While moored within the regulated navigation area, ensure that at least two wire cable mooring lines (firewarps) are rigged and ready for use as emergency towing hookups fore and aft on the outboard side of the vessel;

(8) While underway or anchored within the regulated navigation area, ensure that at least two wire cable mooring lines (firewarps) are rigged and ready for use as emergency towing hookups fore and aft on the vessel; and,

(9) Proceed as directed by the COTP.

(g) *Requirements for vessels operating in the vicinity of a vessel carrying dangerous cargoes.* (1) Except for a vessel that is attending a vessel carrying dangerous cargo with permission from the master of the vessel carrying dangerous cargo or a vessel that is anchored or moored at a marina, wharf, or pier, and which remains moored or at anchor, no vessel may, without the permission of the COTP:

(i) Come or remain within 500 yards of the port or starboard side or within 1,000 yards of the bow or stern of an underway vessel that is carrying dangerous cargo; or

(ii) Come or remain within 100 yards of a moored or anchored vessel carrying dangerous cargo.

(2) The master, owner, or operator of any vessel receiving permission under paragraph (g)(1) of this section shall:

(i) Maintain a continuous radio guard on VHF-FM channels 13 and 16;

(ii) Operate at ''no wake'' speed or the minimum speed needed to maintain steerage; and

(iii) Proceed as directed by the COTP.

(3) No vessel may overtake a vessel carrying dangerous cargoes unless the overtaking can be completed before reaching any bend in the channel. Before any overtaking, the pilots, masters or operators of both the overtaking vessel and the vessel being overtaken must clearly agree on the circumstances of the overtaking, including vessel speeds, time and location of overtaking.

(h) *Additional restrictions above the C&D Canal.* When operating on the Delaware River above the C&D Canal:

(1) A vessel carrying dangerous cargo must be escorted by at least one commercial tug; and

(2) Meeting situations shall be avoided on river bends to the maximum extent possible.

(i) The COTP will issue a Broadcast Notice to Mariners to inform the marine community of scheduled vessel movements during which the restrictions imposed by paragraphs (g) and (h) of this section will be in effect.

[CGD 05–96–010, 62 FR 40275, July 28, 1997, as amended by USCG–2000–7223, 65 FR 40058, June 29, 2000]

§ 165.511 Security Zone; Atlantic Ocean, Chesapeake & Delaware Canal, Delaware Bay, Delaware River and its tributaries.

(a) *Location*. A 500-yard radius around escorted passenger vessels in the Captain of the Port, Delaware Bay zone as defined in 33 CFR 3.25–05.

(b) *Regulations*. (1) All persons are required to comply with the general regulations governing security zones in § 165.33 of this part.

(2) All persons or vessels operating at the minimum safe speed necessary to maintain navigation may transit within 500 yards of an escorted passenger vessel without the permission of the Captain of the Port Delaware Bay, PA or designated representative while the escorted passenger vessel is in the Captain of the Port Delaware Bay zone.

(3) No person or vessel may transit or remain within 100 yards of an escorted passenger vessel without the permission of the Captain of the Port Delaware Bay or designated representative while the passenger vessel is in the Captain of the Port Philadelphia zone.

(4) Any person or vessel authorized to enter the security zone must operate in strict conformance with any directions given by the Captain of the Port Delaware Bay or designated representative and leave the security zone immediately if the Captain of the Port Delaware Bay or designated representative so orders.

(5) When an escorted passenger vessel approaches within 100 yards of any vessel that is moored or anchored, the stationary vessel must stay moored or anchored while it remains within 100 yards of the passenger vessel unless it is either ordered by or given permission by the Captain of the Port, Delaware Bay or designated representative to do otherwise.

(6) The Coast Guard designated representative enforcing this section can be contacted on VHF Marine Band Radio, channels 13 and 16. The Captain of the Port can be contacted at (215) 271–4807.

(c) *Maneuver-restricted vessels*. When conditions permit, the Captain of the Port or designated representative should:

(1) Permit vessels constrained by their navigational draft or restricted in their ability to maneuver to pass within the 100 yards of the passenger vessel in order to ensure safe passage in accordance with the Navigation Rules as seen in 33 CFR chapter I, subchapters D and E; and

(2) Permit vessels constrained by their navigational draft or restricted in their ability to maneuver that must transit via a navigable channel or waterway to pass within 100 yards of an anchored passenger vessel.

(d) *Definitions*. As used in this section—

Captain of the Port means the Commanding Officer of the Coast Guard Sector Delaware Bay or any Coast Guard commissioned, warrant, or petty officer who has been authorized by the Captain of the Port to act as a designated representative on his behalf.

Escort means assets (surface or air) with the Coast Guard insignia that accompany and protect the escorted vessel, armed with crew-served weapons that are manned and ready.

Passenger vessels means vessels greater than 100 feet in length, over 100 gross tons that are authorized to carry 500 or more passengers, making voyages lasting more than 24 hours, except for ferries.

[CGD05–04–047, 69 FR 56697, Sept. 22, 2004]

§ 165.512 Safety Zone; Patapsco River, Northwest and Inner Harbors, Baltimore, MD.

(a) *Definitions*. For the purposes of this section:

(1) *Captain of the Port, Baltimore, Maryland* means the Commander, Coast Guard Sector Baltimore or any Coast Guard commissioned, warrant, or petty officer who has been authorized by the Captain of the Port, Baltimore, Maryland to act on his or her behalf.

(2) *USS CONSTELLATION ''turnaround'' participants* means the USS CONSTELLATION, its support craft and the accompanying towing vessels.

(b) *Location*. The following area is a moving safety zone: All waters, from surface to bottom, within 200 yards ahead of or 100 yards outboard or aft of the historic sloop-of-war USS CONSTELLATION, while operating in the Inner Harbor, the Northwest Harbor and the Patapsco River.

(c) *Regulations.* (1) The general regulations governing safety zones, found in § 165.23, apply to the safety zone described in paragraph (b) of this section.

(2) With the exception of USS CONSTELLATION ''turn-around'' participants, entry into or remaining in this zone is prohibited, unless authorized by the Captain of the Port, Baltimore, Maryland.

(3) Persons or vessels requiring entry into or passage through the moving safety zone must first request authorization from the Captain of the Port, Baltimore, Maryland to seek permission to transit the area. The Captain of the Port, Baltimore, Maryland can be contacted at telephone number (410) 576–2693. The Coast Guard vessels enforcing this section can be contacted on Marine Band Radio VHF Channel 16 (156.8 MHz). Upon being hailed by a U.S. Coast Guard vessel by siren, radio, flashing light, or other means, the person or vessel shall proceed as directed. If permission is granted, all persons or vessels must comply with the instructions of the Captain of the Port, Baltimore, Maryland, and proceed at the minimum speed necessary to maintain a safe course while within the zone.

(d) *Enforcement.* The U.S. Coast Guard may be assisted in the patrol and enforcement of the zone by Federal, State and local agencies.

(e) *Enforcement period.* This section will be enforced from 2 p.m. through 7 p.m. on the Thursday before Memorial Day (observed), and, if necessary due to inclement weather, from 2 p.m. through 7 p.m. on the Thursday following Memorial Day (observed).

[CGD05–07–010, 72 FR 34624, June 25, 2007, as amended by USCG–2012–1075, 78 FR 14189, Mar. 5, 2013]

§ 165.513 Safety Zone; Magothy River, Sillery Bay, MD.

(a) *Regulated area.* The following area is a safety zone: All waters of the Magothy River, in Sillery Bay, contained within lines connecting the following positions: From position latitude 39°04′40″ N, longitude 076°27′44″ W; thence to position latitude 39°04′48″ N, longitude 076°27′19″ W; thence to position latitude 39°04′59″ N, longitude 076°27′45″ W; thence to position latitude 39°04′59″ N, longitude 076°28′01″ W; thence to position latitude 39°04′41″ N, longitude 076°27′51″ W; thence to the point of origin at position latitude 39°04′40″ N, longitude 076°27′44″ W. All coordinates reference Datum NAD 1983.

(b) *Definitions.* As used in this section:

(1) *Captain of the Port Baltimore* means the Commander, U.S. Coast Guard Sector Baltimore, Maryland.

(2) *Designated representative* means any Coast Guard commissioned, warrant, or petty officer who has been authorized by the Captain of the Port Baltimore to assist in enforcing the safety zone described in paragraph (a) of this section.

(c) *Regulations.* (1) All persons are required to comply with the general regulations governing safety zones found in 33 CFR 165.23.

(2) All vessels and persons are prohibited from entering and accessing this safety zone, except as authorized by the Captain of the Port Baltimore or his or her designated representative.

(3) Persons or vessels requiring entry into or passage within the safety zone must request authorization from the Captain of the Port Baltimore or his or her designated representative, by telephone at (410) 576–2693 or by marine band radio on VHF–FM Channel 16 (156.8 MHz), from 8 a.m. until 10 p.m. on the fourth Saturday in July annually. All Coast Guard vessels enforcing this safety zone can be contacted on marine band radio VHF–FM Channel 16 (156.8 MHz).

(4) All vessels and persons must comply with instructions of the Captain of the Port Baltimore or his or her designated representative.

(5) The operator of any vessel entering or located within this safety zone shall:

(i) Travel at no-wake speed,

(ii) Stop the vessel immediately upon being directed to do so by any commissioned, warrant or petty officer on board a vessel displaying a Coast Guard Ensign, and

(iii) Proceed as directed by any commissioned, warrant or petty officer on board a vessel displaying a Coast Guard Ensign.

(d) *Enforcement.* The U.S. Coast Guard may be assisted in the patrol

and enforcement of the safety zone by any Federal, State, and local agencies.

(e) *Enforcement period*. This section will be enforced from 8 a.m. until 10 p.m. on the fourth Saturday in July annually.

[USCG–2012–0001, 77 FR 24840, Apr. 26, 2012]

§ 165.514 Safety Zone: Atlantic Intracoastal Waterway and connecting waters, vicinity of Marine Corps Base Camp Lejeune, North Carolina.

(a) *Location*. The following area is a safety zone: All waters of the Atlantic Intracoastal Waterway (AICW) and connecting waters, from Bogue Sound—New River Daybeacon 58 (LLNR 39210) at approximate position 34°37′57″ North, 077°12′18″ West, and continuing in the AICW southwest to Bogue Sound—New River Daybeacon 70 (LLNR 39290) at approximate position 34°33′07″ North, 077°20′30″ West. All coordinates reference Datum: NAD 1983.

(b) *Regulations*. Notwithstanding the provisions of 33 CFR 334.440(e)(2)(i), no vessel may enter the safety zone described in paragraph (a) of this section while weapons firing exercises are in progress, except as provided in paragraph (c) of this section or unless permitted by the Captain of the Port (COTP) North Carolina.

(1) Red warning flags or red warning lights will be displayed on towers located at both ends of the safety zone (Bear Creek and Cedar Point) while firing exercises are in progress. The flags or lights will be displayed by 8 a.m. on days where firing exercises are scheduled, and will be removed at the end of the firing exercise.

(2) A Coast Guard or U.S. Navy vessel will patrol each end of the safety zone to ensure the public is aware that firing exercises are in progress and that the firing area is clear of vessel traffic before weapons are fired.

(c) *General information*—(1) *Announcements*. The COTP North Carolina will announce the specific times and locations of firing exercises by Broadcast Notice to Mariners and Local Notice to Mariners. Normally, weapons firing for each firing exercise is limited to a two nautical mile portion of the safety zone. The COTP may issue general permission to transit all or specified parts of the safety zone outside of the actual firing area or if firing is temporarily stopped. This general permission will be announced in a Local Notice to Mariners and Broadcast Notice to Mariners.

(2) *Camp Lejeune artillery operations*. Artillery weapons firing over the AICW from Marine Corps Base Camp Lejeune will be suspended and vessels permitted to transit the specified 2-nautical-mile firing area for a 1-hour period beginning at the start of each odd-numbered hour local time (e.g., 9 a.m.; 1 p.m.). A vessel may not enter the specified firing area unless it will be able to complete its transit of the firing area before firing exercises are scheduled to re-start.

(3) *Atlantic Ocean naval gunnery live fire operations*. Naval gunnery live fire operations over the AICW from off shore on the Atlantic Ocean may be conducted for periods not to exceed 4 hours, then suspended and vessels permitted to transmit the specified two-mile firing area for a minimum of one hour before firing may resume. A vessel may not enter the specified firing area unless it will be able to complete its transit of the firing area before firing exercises are scheduled to re-start.

(d) *Contact information*. U.S. Navy safety vessels may be contacted on VHF marine band radio channels 13 (156.65 MHz) and 16 (156.8 MHz). The Captain of the Port may be contacted at Sector North Carolina by telephone at (877) 229–0770 or (910) 772–2200.

[CGD 05–98–38, 63 FR 58636, Nov. 2, 1998, as amended by USCG–2000–7223, 65 FR 40058, June 29, 2000; CGD05–03–167, 69 FR 41946, July 13, 2004; USCG–2011–0368, 76 FR 26605, May 9, 2011]

§ 165.515 Safety Zone: Cape Fear River, Wilmington, North Carolina.

(a) *Location*. The following area is a safety zone:

(1) The waters of the Cape Fear River bounded by a line connecting the following points:

Latitude	Longitude
34°14′12″ N	77°57′10″ W
34°14′12″ N	77°57′06″ W
34°13′54″ N	77°57′00″ W
34°13′54″ N	77°57′06″ W

(2) The safety zone boundary can be described as follows: starting at the stern of the Battleship USS NORTH CAROLINA, across the Cape Fear River to the north end of the Coast Guard moorings, down along the east bank of the Cape Fear River to the bow of the tug CAPTAIN JOHN TAXIS Memorial (Chandler's Wharf), back across the Cape Fear River to Eagle Island, and then up along the west bank of the Cape Fear River to the stern of the Battleship USS NORTH CAROLINA.

(b) *Definitions. The designated representative of the Captain of the Port* is any Coast Guard commissioned, warrant, or petty officer who has been authorized by the Captain of the Port, North Carolina to act on his behalf.

(c) *General information.* The Captain of the Port and the Command Duty Officer at Sector North Carolina can be contacted at telephone number (877) 229–0770 or (910) 772–2200. The Coast Guard Patrol Commander and the senior boarding officer on each vessel enforcing the safety zone can be contacted on VHF-FM channels 16 and 81.

(d) *Regulation.* Except for persons or vessels authorized by the Coast Guard Patrol Commander, no person or vessel may enter or remain in the regulated area.

(1) The operator of any vessel in the immediate vicinity of this safety zone shall:

(i) Stop the vessel immediately upon being directed to do so by any commissioned, warrant, or petty officer on board a vessel displaying a Coast Guard Ensign.

(ii) Proceed as directed by any commissioned, warrant, or petty officer on board a vessel displaying a Coast Guard Ensign.

(2) Any spectator vessel may anchor outside of the regulated area specified in paragraph (a) of the section, but may not block a navigable channel.

(e) *Effective date.* The Captain of the Port will issue a Marine Safety Information Broadcast and a Notice to Mariners to notify the public when this section is in effect.

[59 FR 33200, June 28, 1994, as amended by USCG–2000–7223, 65 FR 40059, June 29, 2000; USCG–2011–0368, 76 FR 26605, May 9, 2011]

§ 165.518 Security Zone; Waters of the Fifth Coast Guard District.

(a) *Definitions.* As used in this section—

Designated Representative means any U.S. Coast Guard commissioned, warrant or petty officer who has been authorized by the District Commander or local Captain of the Port (COTP), as defined in 33 CFR part 3, subpart 3.25, to act on his or her behalf.

Escorted vessel means a vessel, other than a U.S. naval vessel as defined in § 165.2015, that is accompanied by one or more Coast Guard assets or Federal, State or local law enforcement agency assets as listed below:

(1) Coast Guard surface or air asset displaying the Coast Guard insignia.

(2) Coast Guard Auxiliary surface asset displaying the Coast Guard Auxiliary insignia.

(3) State and/or local law enforcement asset displaying the applicable agency markings and or equipment associated with the agency.

State and/or local law enforcement officers means any State or local government law enforcement officer who has authority to enforce State criminal laws.

(b) *Location.* The following area is a security zone: 500-yard radius around escorted vessels in the navigable waters of the Fifth Coast Guard District as defined in 33 CFR 3.25–1, from surface to bottom.

(c) *Regulations.* (1) No vessel may approach within 500 yards of an escorted vessel within the navigable waters of the Fifth Coast Guard District, unless traveling at the minimum speed necessary to navigate safely.

(2) No vessel may enter within a 100-yard radius of an escorted vessel within the navigable waters of the Fifth Coast Guard District, without approval from the District Commander, Captain of the Port or their designated representatives.

(3) Moored or anchored vessels, which are overtaken by a moving zone, must remain stationary at their location until the escorted vessel maneuvers at least 500 yards past.

(4) Vessels restricted in their ability to maneuver may request permission of the District Commander, Captain of the Port or designated representative

to enter the security zone in order to ensure safe passage in accordance with the Navigation Rules in 33 CFR chapter I, subparts D and E.

(5) The local COTP may notify the maritime and general public by marine information broadcast of the periods during which individual security zones have been activated by providing notice in accordance with 33 CFR 165.7.

(6) When moored, a security zone around an escorted vessel may also be enforced by Coast Guard, State or Local law enforcement personnel shoreside.

(7) Persons desiring to transit within 100 yards of an escorted vessel in the Fifth Coast Guard District must contact the local Captain of the Port on VHF channel 16 (156.800 MHz), VHF channel 13 (156.650 MHz) or at telephone numbers:

Philadelphia: (215) 271–4807
Baltimore: (410) 576–2693
Hampton Roads: (757) 668–5555 or (757) 484–8192
North Carolina: (877) 229–0770 or (910) 772–2200

(8) If permission is granted to transit within 100 yards of an escorted vessel, all persons and vessels must comply with the instructions of the District Commander, Captain of the Port or their designated representative.

[CGD05–04–171, 70 FR 11551, Mar. 9, 2005, as amended by USCG–2011–0368, 76 FR 26605, May 9, 2011]

§ 165.530 Safety Zone: Cape Fear and Northeast Cape Fear Rivers, NC.

(a) *Location*. The following area is a moving safety zone during the specified conditions: The waters of the Cape Fear and Northeast Cape Fear Rivers for 500 yards ahead and astern, and 75 yards abeam of a vessel carrying hazardous materials when designated by the Captain of the Port, North Carolina.

(b) *General Information*. (1) The Captain of the Port and the Command Duty Officer at Sector North Carolina can be contacted at telephone number (877) 229–0770 or (910) 772–2200. The Coast Guard Patrol Commander enforcing the safety zone can be contacted on VHF-FM channels 16 and 81.

(2) The Captain of the Port may authorize and designate any Coast Guard commissioned, warrant, or petty officer to act on his behalf in enforcing this safety zone.

(3) Sector North Carolina will notify the maritime community of periods during which this safety zone will be in effect by providing advance notice of scheduled arrivals and departures of loaded hazardous materials vessels via a marine Broadcast Notice to Mariners.

(c) *Regulation*. The general regulations governing safety zones contained in § 165.23 apply.

[COTP Wilmington, NC 94–004, 59 FR 42759, Aug. 19, 1994, as amended by USCG–2000–7223, 65 FR 40059, June 29, 2000; USCG–2011–0368, 76 FR 26605, May 9, 2011]

§ 165.535 Safety Zone: Atlantic Ocean, Vicinity of Cape Henlopen State Park, Delaware.

(a) *Location*. The following area is a safety zone: All waters of the Atlantic Ocean within the area bounded by a line drawn north from the tip of Cape Henlopen located at latitude 38°48.2′ N, longitude 75°05.5′ W, to a point located at latitude 38°49.4′ N, longitude 75°05.5′ W; thence east to a point located at latitude 38°49.4′ N, longitude 75°01.4′ W; thence south to a point located at latitude 38°43.0′ N, longitude 75°01.4′ W; thence west to a point on the shoreline located at latitude 38°43.0′ N, longitude 75°04.5′ W; thence north following the shoreline, to a point located at latitude 38°48.2′ N, longitude 75°05.5′ W. All coordinate refer to Datum: NAD 1983.

(b) *Regulation*. The general regulations governing safety zones contained in § 165.23 apply. Vessels may not enter the safety zone without first obtaining permission from the Captain of the Port (COTP) Delaware Bay.

(c) *Dates*. This section is enforced annually on the second Saturday in May and the following day.

(d) *General information*. (1) Those times during which hazardous conditions exist inside the safety zone will be announced by Broadcast Notice to Mariners. General permission to enter the safety zone will be broadcast during non-hazardous times.

(2) You can gain access to the safety by calling Sector Field Office Atlantic City command center at telephone number (609) 677–2222 and on VHF channel 13 or 16.

(3) The COTP Delaware Bay may authorize and designate any Coast Guard commissioned, warrant, or petty officer to act on his behalf in enforcing this safety zone.

[CGD05–98–043, 69 FR 28827, May 19, 2004]

§ 165.540 Regulated Navigation Area; Cape Fear River, Northeast Cape Fear River, Wilmington, North Carolina.

(a) *Description of the Regulated Navigation Area (RNA).* The RNA encompasses all waters of the Cape Fear River and Northeast Cape Fear River from the intersection of Bald Head Shoal Channel and Smith Island Channel (centerline coordinates Latitude 33°52′24.028″ N, Longitude 78°00′29.624″ W (NAD 83)) to mile 26.7 on the Northeast Cape Fear River.

(b) *Work areas.* Dredging work within the RNA will be conducted in five distinct areas: Ocean Bar II, Horseshoe Shoal, Passing Lane & Anchorage Basin, Big Island, and the Northeast Cape Fear River. Drilling or blasting is expected to occur within the Passing Lane & Anchorage Basin, Big Island, and the Northeast Cape Fear River work areas. The blast sites within the RNA, will be identified and made available to the public through: Broadcast Notices to Mariners or Local Notices to Mariners (Local Notices to Mariners are available on-line at *www.navcen.uscg.gov/lnm/d5/*); direct contact with the control vessel on channel 16 VHF-FM; direct contact with the contractor; or through the Captain of the Port on VHF marine Band Radio, channels 13 and 16; or at telephone number (910) 772–2200. In addition, dredge and blasting companies will have a control vessel present at the site of each blast.

(c) *Enforcement period.* This section will be enforced during the months of August, September, October, November, December, and January, each year. This rule will expire on January 31, 2006.

(d) *Definitions. Active work area* means a work area in which blasting, drilling, or dredging operations are currently taking place.

Blast site means the area where explosive material is handled during loading, including the perimeter formed by the loaded blast holes and fifty (50) feet (15.2 meters) in all directions from loaded holes.

Blasting operations means the detonation of explosives on the river bottom.

Captain of the Port means the Coast Guard officer designated by the Commandant to command the Captain of the Port Zone as described in 33 CFR 3.25–20.

Control vessel means the vessel at an active work area which coordinates operations within the active work area.

Hangfire means a blast that fails to detonate at initiation, but detonates at a later time.

Mile means measured as nautical miles.

Misfire means a blast that fails to detonate completely after an attempt at initiation, also the explosive material that failed to detonate as planned.

RNA means Regulated Navigation Area.

Work area means those places within the RNA where dredging, drilling, and blasting shall be conducted.

(e) *Description of work areas in the RNA*—(1) *Ocean Bar II, mouth of Cape Fear.* The work area includes: Part of Bald Head Shoal Channel, Smith Island Channel, Baldhead Caswell Channel, Southport Channel, Battery Island Channel, Lower Swash Channel, and the majority of Snows Marsh Channel. The downstream end of the work area (centerline coordinates: Latitude 33°50′43.668″ N, Longitude 78°01′40.068″ W (NAD 1983)) is located southeast of Cape Fear River Channel Lighted Buoy 8 (LL 30350), approximately 2,560 feet east of the centerline of the existing Bald Head Shoal Channel. Upstream end of the work area is located 1,200 feet downstream of the intersection of Snows Marsh Channel and Horseshoe Shoal Channel at turn six (mile 6.5, approximately 1,150 feet downstream of Cape Fear River Channel Lighted Buoy 25 (LL 30530/39965)).

(2) *Horseshoe Shoal.* The work area includes: Horseshoe Shoal Channel and part of Snows Marsh Channel. Downstream end of the work area is located 1,200 feet downstream of the intersection of Snows Marsh Channel and Horseshoe Shoal Channel (mile 6.5, approximately 1,150 feet downstream of Cape Fear River Channel Lighted Buoy

25 (LL 30530/39965)). Upstream end of the work area is located at the intersection of Horseshoe Shoal Channel and Reaves Point Channel (mile 7.7, at about Cape Fear River Channel Lighted Buoy 27 (LL 30550/39945)).

(3) *Big Island*. The work area includes: Part of Keg Island Channel, Lower Big Island Channel, Upper Big Island Channel, and part of Lower Brunswick Channel. Downstream end of the work area is approximately 2,230 feet upstream of the intersection of Upper Lilliput Channel and Keg Island Channel (mile 16.2, approximately 1,320 feet downstream of Cape Fear River Channel Lighted Buoy 46 (LL 30765) and approximately 2,300 feet upstream of Cape Fear River Channel Lighted Buoy 44 (LL 30750)). Upstream end of the work area is approximately 2,680 feet upstream of intersection of Upper Big Island Channel and Lower Brunswick Channel (mile 18.7, approximately 1,620 feet upstream of Cape Fear River Channel Lighted Buoy 56 (LL 30830) and approximately 590 feet downstream of the Carolina Power & Light Company (CP&L) overhead power line crossing).

(4) *Passing Lane and Anchorage Basin*. There are two separate work areas for this contract, separated by the Big Island Contract.

(i) Passing Lane work area is located immediately downstream of the Big Island contract work area. The work area includes: Reaves Point Channel, Lower Midnight Channel, Upper Midnight Channel, Lilliput Channel, and part of Keg Island Channel. Downstream end of Passing Lane work area is the intersection of Horseshoe Shoal Channel and Reaves Point Channel (mile 7.7, at about Cape Fear River Channel Lighted Buoy 27 (LL 30550/39945)). Upstream end of the Passing Lane work area is approximately 2,230 feet upstream of intersection of Upper Lilliput Channel and Keg Island Channel (mile 16.2, approximately 1,320 feet downstream of Cape Fear River Channel Lighted Buoy 46 (LL 30765) and approximately 2,300 feet upstream of Cape Fear River Channel Lighted Buoy 44 (LL 30750)).

(ii) Anchorage Basin work area is located immediately upstream of the Big Island contract work area. The work area includes: Part of Lower Brunswick Channel, Fourth East Jetty Channel, Between Channel, and Anchorage Basin Channel. Downstream end of Anchorage Basin work area is approximately 2,680 feet upstream of intersection of Upper Big Island Channel and Lower Brunswick Channel (mile 18.7, approximately 1,620 feet upstream of Cape Fear River Channel Lighted Buoy 56 (LL 30830) and approximately 590 feet downstream of the CP&L overhead power line crossing). Upstream end of Anchorage Basin work area is the Cape Fear Memorial Bridge (mile 23.6).

(5) *Northeast Cape Fear River*. The downstream end of the work area is the Cape Fear Memorial Bridge (mile 23.6). Upstream end of the work area (approximately mile 26.7) is on the Northeast Cape Fear River and is approximately 700 feet upstream of the turning basin located opposite Koch Sulfur Products Co. and approximately 90 feet downstream of the submerged gas pipeline crossing.

(f) *Regulations*. (1) Blasting, drilling, and dredging operations raise many safety issues for vessels transiting the RNA. All mariners are reminded to exercise caution while transiting or operating in the RNA.

(2) Active work areas, control vessels, and blast sites will be identified via Broadcast Notices to Mariners or Local Notices to Mariners. The Local Notice to Mariners is available on-line at *www.navcen.uscg.gov/lnm/d5/*. Control vessels shall monitor channel 16 VHF-FM.

(3) The following requirements apply to all vessels.

(i) All vessels shall inform themselves of the active work areas prior to entering the RNA.

(ii) All vessels shall contact and receive permission from the control vessel for that work area before entering the active work area.

(iii) All vessels transiting an active work area shall do so at no wake speed or the minimum speed necessary to maintain steerage.

(iv) During blasting operations all vessels are prohibited from entering an area of 500 yards surrounding the blast site. Upon notification of a misfire or hangfire, all vessels underway in the RNA shall proceed to clear the active

work area in which the misfire or hangfire occurred.

(4) Vessels over 300 gross tons and tugs with tows are required to contact the COTP 12 hours before vessel movement within the RNA.

(5) Vessels meeting the notice of arrival requirements under 33 CFR 160.207 are encouraged to notify the COTP at least 48-hours before the vessel enters the RNA to facilitate scheduling and minimize delays. Updates are encouraged at least 12 hours before arriving at the RNA boundaries. The COTP may delay entry into the RNA to accommodate other commercial traffic.

(6) Vessels of 300 gross tons or greater shall be prohibited from entering the RNA when they are advised that a misfire or hangfire has occurred.

(7) For any vessel with another vessel/barge in tow transiting an active work area, the hawser or wire length of the tow shall not exceed 275 feet, measured from the towing bit on the tug to the point where the hawser or wire connects with the towed vessel or barge.

(8) Vessels of 300 gross tons or greater and tugs with tows, shall, prior to entering the RNA, ensure that they have sufficient propulsion and directional control to safely navigate the RNA under the prevailing conditions.

(9) Vessels of 300 gross tons or greater and tugs with tows are prohibited from meeting or overtaking vessels of 300 gross tons or greater or tugs with tows in active work areas or within one nautical mile of an active work area.

(10) The Captain of the Port, North Carolina may, upon written request, authorize a deviation from any regulation in this section if it is found that the proposed operations can be done safely. An application for deviation must be received not less than 48 hours before intended operation and must state the need and describe the proposal.

[CGD05–01–006, 66 FR 39099, July 27, 2001, as amended by USCG–2011–0368, 76 FR 26605, May 9, 2011]

§ 165.552 Security Zone; Oyster Creek Generation Station, Forked River, Ocean County, New Jersey.

(a) *Location.* The following area is a security zone: Starting at the south branch of the Forked River in the vicinity of the Oyster Creek Generation Station, bounded by a line beginning at 39°49′12.0″ N, 074°12′13.0″ W; thence to 39°48′39.7″ N, 074°12′0″ W; along the shoreline, thence to 39°48′40.0″ N, 074°12′0.3″ W; thence to 39°49′11.8″ N, 074°12′10.5″ W; thence back along the shoreline to the beginning point. All coordinates reference Datum: NAD 1983.

(b) *Regulations.* (1) All persons are required to comply with the general regulations governing security zones in § 165.33 of this part.

(2) No person or vessel may enter or navigate within this security zone unless authorized to do so by the Coast Guard or designated representative. Any person or vessel authorized to enter the security zones must operate in strict conformance with any directions given by the Coast Guard or designated representative and leave the security zone immediately if the Coast Guard or designated representative so orders.

(3) The Coast Guard or designated representative enforcing this section can be contacted on VHF Marine Band Radio, channels 13 and 16. The Captain of the Port can be contacted at (215) 271–4807.

(4) The Captain of the Port will notify the public of any changes in the status of this security zone by Marine Safety Radio Broadcast on VHF-FM marine band radio, channel 22 (157.1 MHZ).

(c) *Definitions.* For the purposes of this section, *Captain of the Port* means the Commanding Officer of the Coast Guard Sector Delaware Bay, or any Coast Guard commissioned, warrant, or petty officer who has been authorized by the Captain of the Port to act as a designated representative on his behalf.

[CGD05–03–111, 69 FR 5284, Feb. 4, 2004]

§ 165.553 Security Zone; Salem and Hope Creek Generation Stations, Delaware River, Salem County, New Jersey.

(a) *Location.* The following area is a security zone: the waters of the Delaware River in the vicinity of the Salem and Hope Creek Generation Stations bounded by a line drawn from a point

located at 39°28′08.0″ N, 075°32′31.7″ W to 39°28′06.5″ N, 075°32′47.4″ W, thence to 39°27′28.4″ N, 075°32′15.8″ W, thence to 39°27′28.8″ N, 075°31′56.6″ W, thence to 39°27′39.9″ N, 075°31′51.6″ W, thence along the shoreline to the point of 39°28′08.0″ N, 075°32′31.7″ W. All coordinates reference Datum: NAD 1983.

(b) *Regulations*. (1) All persons are required to comply with the general regulations governing security zones in § 165.33 of this part.

(2) No person or vessel may enter or navigate within this security zone unless authorized to do so by the Coast Guard or designated representative. Any person or vessel authorized to enter the security zones must operate in strict conformance with any directions given by the Coast Guard or designated representative and leave the security zone immediately if the Coast Guard or designated representative so orders.

(3) The Coast Guard or designated representative enforcing this section can be contacted on VHF Marine Band Radio, channels 13 and 16. The Captain of the Port can be contacted at (215) 271–4807.

(4) The Captain of the Port will notify the public of any changes in the status of this security zone by Marine Safety Radio Broadcast on VHF-FM marine band radio, channel 22 (157.1 MHZ).

(c) *Definitions*. For the purposes of this section, *Captain of the Port* means the Commanding Officer of the Coast Guard Sector Delaware Bay, or any Coast Guard commissioned, warrant, or petty officer who has been authorized by the Captain of the Port to act as a designated representative on his behalf.

[CGD05–03–113, 69 FR 5279, Feb. 4, 2004]

§ 165.554 Security Zone; Three Mile Island Generating Station, Susquehanna River, Dauphin County, Pennsylvania.

(a) *Location*. The following area is a security zone: the waters of the Susquehanna River in the vicinity of the Three Mile Island Generating Station bounded by a line beginning at 40°09′14.74″ N, 076°43′40.77″ W; thence to 40°09′14.74″ N, 076°43′42.22″ W, thence to 40°09′16.67″ N, 076°43′42.22″ W, thence to 40°09′16.67″ N, 076°43′40.77″ W; thence back to the beginning point 40°09′14.74″ N, 076°43′40.77″ W. All coordinates reference Datum: NAD 1983.

(b) *Regulations*. (1) All persons are required to comply with the general regulations governing security zones in § 165.33 of this part.

(2) No person or vessel may enter or navigate within this security zone unless authorized to do so by the Coast Guard or designated representative. Any person or vessel authorized to enter the security zone must operate in strict conformance with any directions given by the Coast Guard or designated representative and leave the security zone immediately if the Coast Guard or designated representative so orders.

(3) The Coast Guard or designated representative enforcing this section can be contacted on VHF Marine Band Radio, channels 13 and 16. The Captain of the Port can be contacted at (215) 271–4807. The Security Manager at Three Mile Island can be contacted at (717) 948–8208 or (717) 948–8039.

(4) The Captain of the Port will notify the public of any changes in the status of this security zone by Marine Safety Radio Broadcast on VHF-FM marine band radio, channel 22 (157.1 MHZ).

(c) *Definitions*. For the purposes of this section, *Captain of the Port* means the Commanding Officer of the Coast Guard Sector Delaware Bay, Coast Guard commissioned, warrant, or petty officer who has been authorized by the Captain of the Port to act as a designated representative on his behalf.

[CGD05–03–116, 69 FR 46103, Aug. 2, 2004]

§ 165.555 Safety Zone; Delaware River.

(a) *Definition*. As used in this section, Captain of the Port means the Commander of Sector Delaware Bay or any Coast Guard commissioned, warrant or petty officer who has been authorized by the Captain of the Port to act on his behalf. The Captain of the Port may be contacted by telephone at (215) 271–4807 or via VHF marine band radio, channel 16.

(b) *Location*. The following area is a safety zone: All waters located within a 150-yard radius around the dredging operation and barge, conducting dredging

operations in or near the Marcus Hook Range in the vicinity of Anchorage 7.

(c) *Enforcement*. This safety zone will be enforced annually beginning on September 1 through December 31.

(d) *Regulations*. (1) All persons are required to comply with the general regulations governing safety zones in 33 CFR 165.23 of this part.

(2) All Coast Guard vessels enforcing this safety zone or watch officers aboard the Dredge and Barge can be contacted on VHF marine band radio, channel 16. The Captain of the Port may be contacted by telephone at (215) 271–4807 or via VHF marine band radio, channel 16.

[CGD05–04–035, 70 FR 40887, July 15, 2005]

§ 165.556 Regulated Navigation Area; Chesapeake and Delaware Canal, Chesapeake City Anchorage Basin, MD.

(a) *Location*. The following area is a regulated navigation area: All waters of the Chesapeake and Delaware (C & D) Canal within the anchorage basin at Chesapeake City, Maryland, bounded by a line drawn across the entrance to the basin from position latitude 39°31′39.6″ N, longitude 075°48′36.5″ W, to position latitude 39°31′40.6″ N, longitude 075°48′43.3″ W. All coordinates refer to NAD 1983.

(b) *Definitions*. For the purposes of this section:

District Commander means the Commander, Fifth Coast Guard District or any Coast Guard commissioned, warrant, or petty officer who has been authorized by the Commander, Fifth Coast Guard District, to act on his or her behalf, or his or her designated representative.

(c) *Regulations*. The general regulations governing regulated navigation areas, found in 33 CFR 165.13, apply to the regulated navigation area described in paragraph (a) of this section.

(1) All vessels and persons are prohibited from entering and accessing this regulated navigation area, except as authorized by the District Commander or his or her designated representative.

(2) Persons or vessels requiring entry into or passage within the regulated navigation area must request authorization from the District Commander or his or her designated representative, by telephone at (410) 576–2693 or by marine band radio on VHF–FM Channel 16 (156.8 MHz), from 12:01 a.m. until 11:59 p.m. on the last Saturday in June, annually. All Coast Guard vessels enforcing this regulated navigation area can be contacted on marine band radio VHF–FM Channel 16 (156.8 MHz).

(3) The operator of any vessel entering or located within this regulated navigation area shall:

(i) Travel at no-wake speed,

(ii) Stop the vessel immediately upon being directed to do so by any commissioned, warrant or petty officer on board a vessel displaying a Coast Guard Ensign, and

(iii) Proceed as directed by any commissioned, warrant or petty officer on board a vessel displaying a Coast Guard Ensign.

(4) All vessels and persons within this regulated navigation area must comply with any additional instructions of the District Commander or the designated representative.

(d) *Enforcement*. The U.S. Coast Guard may be assisted in the patrol and enforcement of the regulated navigation area by any Federal, State, and local agencies.

(e) *Enforcement period*. This section will be enforced from 12:01 a.m. until 11:59 p.m. on the last Saturday in June, annually.

[USCG–2008–1119, 74 FR 28611, June 17, 2009]

SEVENTH COAST GUARD DISTRICT

§ 165.T07–0161 Safety Zone; Xterra Swim, Myrtle Beach, SC.

(a) *Regulated area*. The following regulated area is a safety zone: All waters within the following two points of position and the North shore: 33°45′02″ N, 78°50′53″ W to 33°45′11″ N, 78°50′32″ W. The Xterra Swim race consists of an 800 yard swim loop with approximately 150 swimmers. All coordinates are North American Datum 1983.

(b) *Definition*. The term ''designated representative'' means Coast Guard Patrol Commanders, including Coast Guard coxswains, petty officers, and other officers operating Coast Guard vessels, and Federal, state, and local officers designated by or assisting the Captain of the Port Charleston in the enforcement of the regulated area.

(c) *Regulations*. (1) All persons and vessels are prohibited from entering, transiting through, anchoring in, or remaining within the regulated area unless authorized by the Captain of the Port Charleston or a designated representative.

(2) Persons and vessels desiring to enter, transit through, anchor in, or remain within the regulated area may contact the Captain of the Port Charleston by telephone at 843–740–7050, or a designated representative via VHF radio on channel 16, to request authorization. If authorization to enter, transit through, anchor in, or remain within the regulated area is granted by the Captain of the Port Charleston or a designated representative, all persons and vessels receiving such authorization must comply with the instructions of the Captain of the Port Charleston or a designated representative.

(3) The Coast Guard will provide notice of the regulated area by Local Notice to Mariners, Broadcast Notice to Mariners, and on-scene designated representatives.

(d) *Effective date*. This rule is effective on May 4, 2014. This rule will be enforced from 7:30 a.m. until 8:15 a.m. on Sunday, May 4, 2014.

[USCG–2014–0161, 79 FR 22414, Apr. 22, 2014]

§ 165.701 Vicinity, Kennedy Space Center, Merritt Island, Florida—security zone.

(a) The water, land, and land and water within the following boundaries are a security zone—The perimeter of the Cape Canaveral Barge Canal and the Banana River at 28°24′33″ N., 80°39′48″ W.; then due west along the northern shoreline of the barge canal for 1,300 yards; then due north to 28°28′42″ N., 80°40′30″ W., on Merritt Island. From this position, the line proceeds irregularly to the eastern shoreline of the Indian River to a position 1,300 yards south of the NASA Causeway at 28°30′54″ N., 80°43′42″ W. (the line from the barge canal to the eastern shoreline of the Indian River is marked by a three-strand barbed-wire fence), then north along the shoreline of the Indian River to the NASA Causeway at 28°31′30″ N., 80°43′48″ W. The line continues west on the southern shoreline of the NASA Causeway to NASA Gate 3 (permanent), then north to the northern shoreline of the NASA Causeway and east on the northern shoreline of the causeway back to the shoreline on Merritt Island at position 28°31′36″ N., 80°43′42″ W., then northwest along the shoreline to 28°41′01.2″ N., 80°47′10.2″ W. (Blackpoint); then due north to channel marker #6 on the Intracoastal Waterway (ICW), then northeast along the southern edge of the ICW to the western entrance to the Haulover Canal. From this point, the line continues northeast along the southern edge of the Haulover Canal to the eastern entrance to the canal; then due east to a point in the Atlantic Ocean 3 miles offshore at 28°44′42″ N., 80°37′51″ W.; then south along a line 3 miles from the coast to Wreck Buoy ''WR6'', then to Port Canaveral Channel Lighted Buoy 10, then west along the northern edge of the Port Canaveral Channel to the northeast corner of the intersection of the Cape Canaveral Barge Canal and the ICW in the Banana River at 28°24′36″ N., 80°38′42″ W. The line continues north along the east side of the Intracoastal Waterway to daymarker '35' thence North Westerly one quarter of a mile south of NASA Causeway East (Orsino Causeway) to the shoreline on Merritt Island at position 28°30.95′ N., 80°37.6′ W., then south along the shoreline to the starting point.

(b) The area described in paragraph (a) of this section is closed to all vessels and persons, except those vessels and persons authorized by the Commander, Seventh Coast Guard District, or the COTP Jacksonville, Florida, whenever space vehicles are to be launched by the United States Government from Cape Canaveral.

(c) COTP Jacksonville, Florida, closes the security zone, or specific portions of it, by means of locally promulgated notices. The closing of the area is signified by the display of a red ball from a 90-foot pole near the shoreline at approximately 28°35′00″ N., 80°34′36″ W., and from a 90-foot pole near the shoreline at approximately 28°25′18″ N., 80°35′00″ W. Appropriate

Local Notices to Mariners will also be broadcast on 2670 KHZ.

[CGD 79–034, 47 FR 29660, July 8, 1982, as amended by CGD 7–82–10, 48 FR 11696, Mar. 21, 1983; USCG–1998–3799, 63 FR 35532, June 30, 1998]

§ 165.703 Tampa Bay, Florida—Safety Zone.

(a) A floating safety zone is established consisting of an area 1000 yards fore and aft of a loaded anhydrous ammonia vessel and the width of the channel in the following areas:

(1) For inbound tank vessels loaded with anhydrous ammonia, Tampa Bay Cut ''F'' Channel from Lighted Buoys ''3F'' and ''4F'' north through and including Gadsden Point Cut Lighted Buoy ''3'' and commencing at Gadsden Point Cut Lighted Buoys ''7'' and ''8'' north and including Hillsborough Cut ''C'' Channel.

(i) For vessels bound for R. E. Knight Pier at Hookers Point the safety zone includes, in addition to the area in paragraph (a)(1) of this section, Hillsborough Cut ''D'' Channel to the southern tip of Harbor Island.

(ii) For vessels bound for the anhydrous ammonia receiving terminals to Port Sutton the safety zone includes, in addition to the area in paragraph (a)(1) of this section, Port Sutton Channel.

(2) For outbound tank vessels loaded with anhydrous ammonia the safety zone is established when the vessel departs the receiving terminal and continues through the area described in paragraph (a)(1) of this section.

(3) The floating safety zone is disestablished when the anhydrous ammonia carrier is safely moored at the anhydrous ammonia receiving facility.

(b) All vessels over 5000 gross tons intending to pass anhydrous ammonia vessels moored in Port Sutton, and all vessels intending to moor in the R. E. Knight facilities at Hookers Point while an anhydrous ammonia vessel is moored in this facility, must give 30 minutes notice to the anhydrous ammonia vessel so it may take appropriate safety precautions.

(c) The general regulations governing safety zones contained in § 165.23 apply.

(d) The Sector St. Petersburg will notify the maritime community of periods during which these safety zones will be in effect by providing advance notice of scheduled arrivals and departures of loaded anhydrous ammonia vessels via a marine broadcast Notice to Mariners.

(e) Should the actual time of entry of the anhydrous ammonia vessel into the safety zone vary more than one half hour from the scheduled time stated in the broadcast Notice to Mariners, the person directing the movement of the anhydrous ammonia vessel shall obtain permission from Captain of the Port Tampa before commencing the transit.

(f) Prior to commencing the movement, the person directing the movement of the anhydrous ammonia vessel shall make a security broadcast to advise mariners of the intended transit. All additional security broadcasts as recommended by the U.S. Coast Pilot 5, ATLANTIC COAST shall be made through the transit.

(g) Vessels carrying anhydrous ammonia are permitted to enter and transit Tampa and Hillsborough Bay and approaches only with a minimum of three miles visibility.

(h) The Captain of the Port Tampa may waive any of the requirements of this subpart for any vessel upon finding that the vessel or class of vessel, operational conditions, or other circumstances are such that application of this subpart is unnecessary or impractical for purposes of port safety or environmental safety.

(i) The owner, master, agent or person in charge of a vessel or barge, loaded with anhydrous ammonia shall report the following information to the Captain of the Port, Tampa at least twenty-four hours before entering Tampa Bay or its approaches or departing from Tampa Bay:

(1) Name and country of registry of the vessel or barge;

(2) The name of the port or place of departure;

(3) The name of the port or place of destination:

(4) The estimated time that the vessel is expected to begin its transit of Tampa Bay and the time it is expected to commence its transit of the safety zone.

(5) The cargo carried and amount.

[CGD7–85–32, 51 FR 28382, Aug. 7, 1986 as amended by CGD07–87–07, 52 FR 31763, Aug. 24, 1987; 65 FR 9221, Feb. 24, 2000]

§ 165.704 Safety Zone; Tampa Bay, Florida.

(a) A floating safety zone is established consisting of an area 1000 yards fore and aft of a loaded Liquefied Petroleum Gas (LPG) vessel and the width of the channel in the following areas. Any vessels desiring to enter the safety zone must obtain authorization from the Captain of the Port St. Petersburg.

(1) For vessels loaded with LPG and bound for the LPG receiving terminal in Port Sutton the safety zone starts at Tampa Bay Cut ''F'' Channel from Lighted Buoys ''3F'' and ''4F'' and proceeds north ending at Gadsden Point Cut Lighted Buoys ''3'' and ''4''. The safety zone starts again at Gadsden Point Cut Lighted Buoys ''7'' and ''8'' and proceeds north through Hillsborough Cut ''C'', Port Sutton Entrance Channel, and ends at the Port Sutton LPG facility.

(2) For vessels loaded with LPG and bound for the LPG receiving terminal in Rattlesnake the safety zone starts at Tampa Bay Cut ''J'' Channel from lighted buoy ''10J'' and proceeds north through Tampa Bay Cut ''K'' Channel to buoy ''11K.'' When a loaded LPG vessel departs the marked channel at Tampa Bay Cut ''K'' buoy ''11K'' enroute to Rattlesnake, Tampa, FL, the floating safety zone extends 500 yards in all directions surrounding the loaded LPG vessel, until it arrives at the entrance to Rattlesnake. While the loaded LPG vessel is maneuvering in the Rattlesnake slip and until it is safely moored at the LPG facility, the floating safety zone extends 150 feet fore and aft of the loaded LPG vessel and the width of the slip. Moored vessels are allowed within the parameters of the 150-foot safety zone.

(b) The floating safety zone is disestablished when the LPG carrier is safely moored at the LPG receiving facility.

(c) For outbound tank vessels loaded with LPG, the safety zone is established when the vessel departs the terminal and continues through the area described in paragraph (a) of this section.

(d) All vessels over 5000 gross tons intending to pass LPG vessels moored in Port Sutton, and all vessels intending to pass LPG vessels moored in Rattlesnake, must give 30 minutes notice to the LPG vessel so it may take appropriate safety precautions.

(e) The general regulations governing safety zones contained in § 165.23 apply.

(f) The Coast Guard Captain of the Port St. Petersburg will notify the maritime community of periods during which these safety zones will be in effect by providing advance notice of scheduled arrivals and departures of loaded LPG vessels via a marine broadcast Notice to Mariners.

(g) Should the actual time of entry of the LPG vessel into the safety zone vary more than one half (½) hour from the scheduled time stated in the broadcast Notice to Mariners, the person directing the movement of the LPG vessel shall obtain permission from Captain of the Port St. Petersburg before commencing the transit.

(h) Prior to commencing the movement, the person directing the movement of the LPG vessel shall make a security broadcast to advise mariners of the intended transit. All additional security broadcasts as recommended by the U.S. Coast Pilot 5, ATLANTIC COAST, shall be made throughout the transit.

(i) Vessels carrying LPG are permitted to enter and transit Tampa Bay and Hillsborough Bay and approaches only with a minimum of three miles visibility.

(j) The Captain of the Port St. Petersburg may waive any of the requirements of this subpart for any vessel upon finding that the vessel or class of vessel, operational conditions, or other circumstances are such that application of this subpart is unnecessary or impractical for purposes of port safety or environmental safety.

(k) The owner, master, agent or person in charge of a vessel or barge, loaded with LPG shall report, at a minimum, the following information to the Captain of the Port St. Petersburg at least twenty-four (24) hours before entering Tampa Bay, its approaches, or departing Tampa Bay:

(1) The name and country of registry of the vessel or barge;

(2) The name of the port or place of departure;

(3) The name of the port or place of destination;

(4) The estimated time that the vessel is expected to begin its transit of Tampa Bay and the time it is expected to commence its transit of the safety zone(s); and

(5) The cargo carried and amount.

[COTP Tampa 00–054, 66 FR 14489, Mar. 13, 2001]

§ 165.T0704 Safety Zone: Savannah River, Savannah, Georgia.

(a) *Location*. The following area is a safety zone: Two hundred foot radius around Garden City Terminal, approximate position 32 degrees 8 minutes, N, 81 degrees 9.5 minutes W, and around all cargo ships loaded with military equipment and transiting the Savannah River.

(b) *Effective dates*. This regulation becomes effective at 12 p.m. 14 December 1990 until terminated by the Captain of the Port, Savannah, GA.

(c) *Regulation*. In accordance with the general regulations in § 165.23 of this part, entry into the zone is subject to the following requirements.

(1) All persons and vessels in the vicinity of the safety zone shall immediately obey any direction or order of the Captain of the Port or a representative of the Captain of the Port.

(2) The ''representative of the Captain of the Port'' is any Coast Guard commissioned, warrant or petty officer who has been designated by the Captain of the Port, Savannah, GA to act on his behalf. A representative of the Captain of the Port may be contacted on board any Coast Guard vessel assigned to enforce the safety zone.

(3) Before entering the safety zone, a vessel operator shall contact the Captain of the Port or a representative of the Captain of the Port to determine what restrictions, if any, have been imposed on vessels in the safety zone. The Captain of the Port may be contacted by telephone via the Command Duty Officer at (912) 944–4371. Coast Guard vessels assisting in the enforcement of the safety zone may be contacted on VHF-FM channels 13 or 16, or vessel operators may determine restrictions in effect for the safety zone by coming alongside a Coast Guard vessel patrolling the perimeter of the safety zone.

(4) The Captain of the Port will issue a Marine Safety Information Broadcast Notice to Mariners to Notify the maritime community of the safety zone and restrictions imposed.

[Reg. 90–129, 55 FR 52272, Dec. 21, 1990]

EFFECTIVE DATE NOTE: At 55 FR 52272, Dec. 21, 1990, § 165.T0704 was added. This is an emergency temporary rule and will remain in effect until terminated by the Captain of the Port Savannah, GA.

§ 165.705 Port Canaveral Harbor, Cape Canaveral, Florida.

(a) Security Zone A—East (Trident) Basin, Port Canaveral Harbor, at Cape Canaveral Air Force Station, Brevard County, Florida. All waters of the East Basin north of latitude 28°24′36″ N.

(b) Security Zone B—Middle Basin, Port Canaveral Harbor, adjacent to the Navy wharf at Cape Canaveral Air Force Station, Brevard County, Florida. The waters of Port Canaveral Harbor within a line circumscribing the water approaches to the Navy wharf along the northeasterly edge of the Port Canaveral Harbor turning basin at a distance of 200 feet from all portions of the wharf including the dolphins located 200 feet off the northwest end and 75 feet off the southeast end of the wharf.

(c) Entrance into these zones by vessels other than vessels owned or leased by the United States is prohibited without permission of the Captain of the Port, Jacksonville, Florida.

(d) The general regulations governing security zones contained in 33 CFR 165.33 apply.

[CGD7 87–38, 53 FR 38718, Oct. 3, 1988; CGD7 87–38, 54 FR 611, Jan. 9, 1989; CGD7 89–21, 54 FR 26198, June 22, 1989]

§ 165.708 Safety/Security Zone; Charleston Harbor and Cooper River, Charleston, SC.

(a) *Regulated area*. The following boundaries are established as a safety and security zone during specified conditions:

(1) All waters 200 yards ahead and astern and 100 yards to each side of a vessel transporting nuclear materials

while the vessel transits from Charleston Harbor Entrance Buoy ''C'' (LLNR 1885, position 32–39.6N, 079–40.9W) to the Charleston Naval Weapons Station (position 32–55.4N, 079–56.0W) on the Cooper River. All coordinates referenced use datum: NAD 1983.

(2) All waters within 100 yards of the vessel described in paragraph (a)(1) of this section while the vessel is conducting cargo operations at the Charleston Naval Weapons Station.

(b) Captain of the Port Charleston will announce the activation of the safety/security zones described in paragraph (a) of this section by Broadcast Notice to Mariners. The general regulations governing safety and security zones contained in §§165.23 and 165.33 apply.

[COTP Charleston 96–034, 61 FR 68156, Dec. 27, 1996]

§ 165.709 Security Zone; Charleston Harbor, Cooper River, South Carolina.

(a) *Regulated area.* The Coast Guard is establishing a fixed security zone on all waters of the Cooper River, bank-to-bank and surface to bottom, from the Don Holt I–526 Bridge to the intersection of Foster Creek at a line on 32 degrees 58 minutes North Latitude.

(b) *Enforcement period.* This section will be enforced when security assets are on scene and Sector Charleston has notified the maritime community that an Enforcement Period is in effect. Sector Charleston will notify the maritime community by broadcast notice to mariners on VHF Marine Band Radio, Channel 16 (156.8 MHz), or Marine Safety Information Bulletins, or actual notice from on scene security assets enforcing the security zone.

(c) *Regulations.* During enforcement of the security zone described in paragraph (a) of this section, vessels or persons are prohibited from entering, transiting, mooring, anchoring, or loitering within the security zone unless authorized by the Captain of the Port Charleston, South Carolina or his or her designated representative.

(1) Persons desiring to transit the Regulated Area may contact the Captain of the Port via VHF-FM channel 16 or by telephone at (843) 720–3240 and request permission to transit the security zone.

(2) If permission to transit the security zone is granted, all persons and vessels must comply with the instructions of the Captain of the Port or his or her designated representative.

[COTP Charleston 05–037, 70 FR 43282, July 27, 2005]

§ 165.711 Safety Zone: Port Everglades, Fort Lauderdale, FL.

(a) *Regulated area.* A moving safety zone is established in the following area:

(1) The waters around naval aircraft carriers entering Port Everglades in an area 700 yards forward, 500 yards astern and 350 yards on either side of each vessel, beginning at the Port Everglades Sea Buoy in approximate position 26°05.5′ N, 80°04.8′ W and continuing until the vessel is safely moored in approximate position 26°04.9′ N, 80°06.9′ W. All coordinates referenced use datum: NAD 83.

(2) The waters around naval aircraft carriers departing Port Everglades in an area 700 yards forward, 500 yards astern and 350 yards on either side of each vessel beginning at the Pier in approximate position 26°04.9′ N, 80°06.9′W, and continuing until the stern passes the Port Everglades Sea Buoy, in approximate position 26°05.5′ N, 80°04.8′ W. All coordinates referenced use datum: NAD 83.

(b) *Regulations.* (1) No person or vessel may enter, transit, or remain in the safety zone unless authorized by the Captain of the Port, Miami, Florida, or a Coast Guard commissioned, warrant, or petty officer designated by him.

(2) Vessels encountering emergencies which require transit through the moving safety zone should contact the Coast Guard patrol craft on VHF Channel 16. In the event of an emergency, the Coast Guard patrol craft may authorize a vessel to transit through the safety zone with a Coast Guard designated escort.

(3) All persons and vessels shall comply with the instructions of on-scene patrol personnel. On-scene patrol personnel include commissioned, warrant, or petty officers of the U.S. Coast Guard. Coast Guard Auxiliary and local

or state officials may be present to inform vessel operators of this regulation and other applicable laws.

[COTP MIAMI 96–054, 62 FR 32201, June 13, 1997]

§ 165.714 Regulated Navigation Area; Atlantic Ocean, Charleston, SC.

(a) *Location*. The following area is a Regulated Navigation Area: A trapezoid at the water surface, and the entire water column from surface to seabed inclusive of the vessel, bounded by the following four coordinates:

	Latitude	Longitude
Western boundary.	32°42′56″ N	79°47′34″ W
Southern boundary.	32°42′32″ N	79°46′42″ W
Eastern boundary.	32°43′26″ N	79°45′27″ W
Northern boundary.	32°43′56″ N	79°46′08″ W

(NAD 83)

(b) *Regulations*. In accordance with the general regulations in § 165.23 of this part, all vessels and persons are prohibited from anchoring, diving, laying cable or conducting salvage operations in this zone except as authorized by the Captain of the Port.

[CGD 07–95–054, 60 FR 45047, Aug. 30, 1995]

§ 165.720 Safety/Security Zone: St. Johns River, Jacksonville, FL.

(a) *Location*. The water and the land within the following boundaries are established as a safety and security zone during specified conditions:

(1) All waters within 200 yards of Blount Island, Jacksonville, Florida and all adjacent land within 100 yards of the island shoreline during staging of Department of Defense equipment and during the loading/unloading of military supply vessels.

(2) All waters within 200 yards of ''any'' waterfront facility at which a laden military vessel is located and all land at the facility, including docks and piers, within 100 yards of the St. Johns River.

(3) All waters within 200 yards of any specified military supply vessel during its transit of the St. Johns River and out to three (3) nautical miles offshore.

(b) *Regulations*. (1) For public notice, the zone described in paragraph (a)(1) of this section is effective beginning 11 December 1990 and will remain in force until cancelled by the Captain of the Port Jacksonville, Florida.

(2) The COTP Jacksonville may activate, as necessary, any portion of the safety/security zone described in paragraphs (a)(2) and (a)(3) of this section by means of locally promulgated broadcast notice to mariners. Once implemented, neither overtaking nor meeting situations will be allowed during specified vessel transits.

(3) In accordance with the general regulations governing safety and security zones contained in 33 CFR 165.23 and 165.33 of this part, entry into any portion of the described zone is prohibited unless authorized by the Captain of the Port Jacksonville, Florida.

(4) This regulation does not apply to authorized law enforcement agencies operating within the safety/security zone.

[COTP Jacksonville, FL Reg. 90–124, 55 FR 51700, Dec. 17, 1990]

§ 165.721 Safety Zone: St. Johns River, Jacksonville, FL.

(a) *Location*. The following area is established as a safety zone during the specified conditions: The waters within a 500 yard radius of the fireworks barge or barges during the storage, preparation, and launching of fireworks in the St. Johns River between the Hart and Acosta Bridges.

(b) *Effective dates*. This section becomes effective upon activation by the Captain of the Port by the broadcasting of a local Notice to Mariners on appropriate VHF-FM radio frequencies. It terminates at the conclusion of the fireworks display unless terminated earlier by the Captain of the Port.

(c) *Regulations*. (1) In accordance with the general regulations in 165.23 of this part, anchoring, mooring or transiting in this zone is prohibited unless authorized by the Captain of the Port or District Commander.

(2) This regulation does not apply to authorized law enforcement agencies operating within the Safety Zone.

[COTP Jacksonville Reg. 94–027, 59 FR 55584, Nov. 8, 1994]

§ 165.722 Security Zone: St. Johns River, Jacksonville, Florida.

(a) Location. The water located within the following area is established as a security zone: beginning at the shoreline of the St. Johns River at the northernmost property line of Naval Air Station Jacksonville next to Timuquana Country Club, at 30°14′39.5″ N, 81°40′45″ W; thence northeasterly to 30°14′42″ N, 81°40′42″ W; thence south remaining 400 feet from the shoreline at mean high water; thence past Piney Point and Black Point to the northern edge of Mulberry Cover Manatee refuge, 400 feet from Naval Air Station Jacksonville boat ramp, at 30°13′00″ N, 81°40′23.5″ W; thence southwesterly in a straight line to position 30°12′14″ N, 81°40′42″ W; thence southerly, remaining 400′ seaward of the mean high water shoreline to 30°11′40″ N, 81°41′15.5″ W; thence northwest to the point at the end of the property line of Naval Air Station Jacksonville just north of the Buckman Bridge at position 30°11′42.30″ N, 81°41′23.66″ W; thence northeasterly along the mean high water shoreline of the St. Johns River and Mulberry Cove to the point of beginning. Datum: NAD 83

(b) In accordance with the general regulations in § 165.33 of this part, no person or vessel may enter or remain in the zone without the permission of the Captain of the Port Jacksonville, Florida. All other portions of § 165.33 remain applicable.

(c) This regulation does not apply to Coast Guard vessels and authorized law enforcement vessels operating within the Security Zone.

[COTP Jacksonville Reg. 93–115, 60 FR 65571, Dec. 20, 1995]

§ 165.726 Regulated Navigation Areas; Miami River, Miami, Florida.

(a) *Location*. The following are Regulated Navigation Areas:

(1) All the waters of the Miami River, Miami, Florida, from the Brickell Avenue Bridge, in approximate position 25°46′19″ N, 80°11′4″ W, inland to the South Florida Water Management District's salinity dam in approximate position 25°48′4″ N, 80°15′6″ W.

(2) The Tamiami Canal from its intersection with the Miami river in approximate position 25°47′7″ N, 80°14′7″ W to the N.W. 37th Avenue bridge in approximate position 25°48′5″ N, 80°15′5″ W. All coordinates referenced use datum: NAD 83.

(b) *Regulations*. The restrictions in this paragraph apply to vessels operating within the regulated navigation areas in paragraph (a) of this section unless authorized to deviate by the Captain of the Port, Miami, Florida, or a Coast Guard commissioned, warrant, or petty officer designated by him.

(1) All rafted vessels (inboard and outboard) must be properly moored in accordance with applicable municipal laws and regulations.

(2) At no time shall any vessels be rafted more than two abreast.

(3) Neither single nor rafted vessels shall extend greater than 54 feet into the main river (measured from the dock) without permission of the Captain of the Port.

(4) A minimum channel width of 65 feet shall be maintained at all times on the Miami River from the Brickell Avenue Bridge west to the Tamiami Canal. A minimum channel width of 45 feet shall be maintained at all times on the Miami River west of the junction of the Miami River and the Tamiami Canal to the South Florida Water Management District's salinity dam, as well as on the Tamiami Canal from its mouth to the N.W. 37th Avenue Bridge.

(5) All moored and rafted vessels shall provide safe access from the shore.

(6) All moored and rafted vessels shall provide clear and ready access for land-based firefighters to safely and quickly reach outboard rafted vessels.

(7) No vessels shall moor or raft in any manner as to impede safe passage of another vessel to any of the tributaries of the Miami River.

(8) Nothing in these regulations shall prohibit the U.S. Army Corps of Engineers from requiring the relocation or movement of vessels in a declared flood emergency.

(c) *Enforcement*. Violations of these regulated navigation areas should be reported to the Captain of the Port, Miami. Persons in violation of these regulations will be subject to civil penalty under § 165.13(b) of this part.

[CGD07–97–019, 62 FR 50512, Sept. 26, 1997]

§ 165.728 Jacksonville, Florida—safety zones.

(a) The water, land, and land and water within the following boundaries are established as safety zones during the specified conditions:

(1) *Zone A.* 200 yards in all directions around any specified Maritime Prepositioned Ship as it transits between the St. Johns River entrance sea buoy (STJ) and its berth inside the Mayport Basin (Ribault Bay), Mayport, Florida. The prescribed safety zone will also be in effect as the vessel transits to its berth at Blount Island Marine Terminal, Jacksonville, Florida.

(2) *Zone B.* 100 yards in all directions on land and 200 yards on water from the eastern end of Transit Shed #2 to the east shore of Alligator Creek at Blount Island Terminal, Jacksonville, Florida.

(3) Zone C: 100 yards in all directions on land from Gate berth #1 and all waters within the Back River (locally known as the Gate Slip) on Blount Island, Jacksonville, Florida, commencing from a line drawn between the southwesterly most shore point latitude 30°23′34″, longitude 81°30′52″ and the southeasterly most shore point latitude 30°23′38″, longitude 81°30′36″.

(b) The areas described in paragraph (a) of this section may be closed to all vessels and persons, except those vessels and persons authorized by the Commander, Seventh Coast Guard District or the Captain of the Port, Jacksonville, Florida, whenever specified Maritime Prepositioned Ships are transiting the St. Johns River (Zone A), moored at Blount Island (Zone B), or moored at Gate Terminal (Zone C).

(c) The general regulations governing safety zones contained in 33 CFR 165.23 apply.

(d) The Captain of the Port Jacksonville, Florida will activate the safety zones or specific portions of them by issuing a local broadcast notice to mariners. The closing of the area at Blount Island, described above, will be signified by the display of a rotating yellow light located on the waterfront at Blount Island Marine Terminal or at the Gate Terminal Berth #1.

[CGD7 87–15, 52 FR 23442, June 22, 1987, as amended by CGD7 91–33, 56 FR 22826, May 17, 1991]

§ 165.729 Jacksonville Harbor, Florida—security zone.

(a) The water, land, and land and water within the following boundaries are established as security zones during the specified conditions:

(1) *Zone A.* 200 yards in all directions around any specified Maritime Prepositioned Ship as it transits between the St. Johns River entrance sea buoy (STJ) and its berth inside the Mayport Naval Basin (Ribault Bay), Mayport, Florida. The prescribed security zone will also be in effect as the vessel transits to its berth at Blount Island Marine Terminal, Jacksonville, Florida.

(2) *Zone B.* 100 yards in all directions on land and 200 yards on water from the eastern end of Transit Shed #2 to the east shore of Alligator Creek at Blount Island Terminal, Jacksonville, Florida.

(3) Zone C: 100 yards in all directions on land from Gate berth #1 and all waters within the Back River (locally known as the Gate Slip) on Blount Island, Jacksonville, Florida, commencing from a line drawn between the southwesterly most shore point latitude 30°23′34″, longitude 81°30′52″ and the southeasterly most shore point latitude 30°23′38″, longitude 81°30′36″.

(b) The areas described in paragraph (a) of this section shall be closed to all vessels and persons, except those vessels and persons authorized by the Commander, Seventh Coast Guard District or the Captain of the Port, Jacksonville, Florida, whenever specified Maritime Prepositioned Ships are transiting the St. Johns River (Zone A), moored at Blount Island (Zone B), or moored at Gate Terminal (Zone C).

(c) The general regulations governing security zones contained in 33 CFR 165.33 apply.

(d) The Captain of the Port Jacksonville, Florida will activate the security zones or specific portions of them by issuing a local broadcast notice to mariners. The closing of the area at Blount Island, described above, will be signified by the display of a rotating yellow light located on the waterfront

at Blount Island Marine Terminal or at the Gate Terminal Berth #1.

[CGD7 87–16, 52 FR 23443, June 22, 1987, as amended by CGD7 91–34, 56 FR 22827, May 17, 1991]

§ 165.730 King's Bay, Georgia—Regulated navigation area.

Vessels transiting in the water bounded by the line connecting the following points must travel no faster than needed for steerageway:

Latitude	*Longtitude*
30°48′00.0″ N	081°29′24.0″ W
30°46′19.5″ N	081°29′17.0″ W
30°47′35.0″ N	081°30′16.5″ W

and thence to the point of beginning

[CGD7 92–41, 58 FR 38057, July 15, 1993]

§ 165.731 Safety/Security Zone: Cumberland Sound, Georgia and St. Marys River Entrance Channel.

(a) *Location.* A permanent safety/security zone is established within the following coordinates, the area enclosed by a line starting at 30°44′55″ N, 081°29′39″ W; thence to 30°44′55″ N, 081°29′18″ W; thence to 30°46′35″ N, 081°29′18″ W; thence to 30°47′02″ N, 081°29′34″ W; thence to 30°47′21″ N, 081°29′39″ W; thence to 30°48′00″ N, 081°29′42″ W; thence to 30°49′07″ N, 081°29′56″ W; thence to 30°49′55″ N, 081°30′35″ W; thence to 30°50′15″ N, 081°31′08″ W; thence to 30°50′14″ N, 081°31′30″ W; thence to 30°49′58″ N, 081°31′45″ W; thence to 30°49′58″ N, 081°32′03″ W; thence to 30°50′12″ N, 081°32′17″ W; thence following the land based perimeter boundary to the point of origin.

(b) A temporary safety/security zone, when activated by the Captain of the Port, Jacksonville, Florida, encompasses all waters and land from bank to bank within Cumberland Sound and the St. Marys Entrance Channel: the northern extent of this zone starts at the southern tip of Crab Island; lighted buoy number ''1'' at the mouth of the Amelia River demarks the southern boundary; day marker number ''2'' at the mouth of the St. Marys River indicates the western boundary; and the eastern boundary extends out to three (3) nautical miles in the Atlantic Ocean, with the zone also encompassing the waters within 1000 yards of the entrance channel east of the jetties.

(c) *Regulations.* (1) The Captain of the Port, Jacksonville, Florida will activate the temporary safety/security zone described in paragraph (b) of this section by issuing a local broadcast notice to mariners.

(2) All persons and vessels in the vicinity of the safety/security zone shall immediately obey any direction or order of the Captain of the Port, Jacksonville, Florida.

(3) The general regulations governing safety and security zones contained in 33 CFR 165.23 and .33 apply. No person or vessel may enter or remain within the designated zones without the permission of the Captain of the Port, Jacksonville, Florida.

(4) This regulation does not apply to persons or vessels operating under the authority of the United States Navy nor to authorized law enforcement agencies.

[COTP Jacksonville Reg. 90–94, 55 FR 42374, Oct. 19, 1990]

§ 165.749 Security Zone: Escorted Vessels, Savannah, Georgia, Captain of the Port Zone.

(a) *Definitions.* The following definitions apply to this section:

COTP means Captain of the Port Savannah, GA.

Designated representatives means Coast Guard Patrol Commanders including Coast Guard coxswains, petty officers and other officers operating Coast Guard vessels, and Federal, State, and local officers designated by or assisting the COTP, in the enforcement of the security zone.

Escorted vessel means a vessel, other than a large U.S. naval vessel as defined in 33 CFR 165.2015, that is accompanied by one or more Coast Guard assets or other Federal, State or local law enforcement agency assets clearly identifiable by lights, vessel markings, or with agency insignia as listed below:

(1) Coast Guard surface or air asset displaying the Coast Guard insignia.

(2) State and/or local law enforcement asset displaying the applicable agency markings and/or equipment associated with the agency.

(3) When escorted vessels are moored, dayboards or other visual indications

such as lights or buoys may be used. In all cases, broadcast notice to mariners will be issued to advise mariners of these restrictions.

Minimum safe speed means the speed at which a vessel proceeds when it is fully off plane, completely settled in the water and not creating excessive wake. Due to the different speeds at which vessels of different sizes and configurations may travel while in compliance with this definition, no specific speed is assigned to minimum safe speed. In no instance should minimum safe speed be interpreted as a speed less than that required for a particular vessel to maintain steerageway. A vessel is not proceeding at minimum safe speed if it is:

(1) On a plane;

(2) In the process of coming up onto or coming off a plane; or

(3) Creating an excessive wake.

(b) *Regulated area*. All navigable waters, as defined in 33 CFR 2.36, within the Captain of the Port Zone, Savannah, Georgia 33 CFR 3.35–15.

(c) *Security zone*. A 300-yard security zone is established around each escorted vessel within the regulated area described in paragraph (b) of this section. This is a moving security zone when the escorted vessel is in transit and becomes a fixed zone when the escorted vessel is anchored or moored. A security zone will not extend beyond the boundary of the regulated area in this section.

(d) *Regulations*. (1) The general regulations for security zones contained in § 165.33 of this part apply to this section.

(2) A vessel may request the permission of the COTP Savannah or a designated representative to enter the security zone described in paragraph (c) of this section. If permitted to enter the security zone, a vessel must proceed at the minimum safe speed and must comply with the orders of the COTP or a designated representative. No vessel or person may enter the inner 50-yard portion of the security zone closest to the vessel.

(e) *Notice of security zone*. The COTP will inform the public of the existence or status of the security zones around escorted vessels in the regulated area by Broadcast Notice to Mariners. Coast Guard assets or other Federal, State or local law enforcement agency assets will be clearly identified by lights, vessel markings, or with agency insignia. When escorted vessels are moored, dayboards or other visual indications such as lights or buoys may be used.

(f) *Contact information*. The COTP Savannah may be reached via phone at (912) 652–4353. Any on scene Coast Guard or designated representative assets may be reached via VHF–FM channel 16.

[USCG–2007–0157, 73 FR 37837, July 2, 2008]

§ 165.751 Security Zone: LNG mooring slip, Savannah River, Savannah, Georgia.

(a) *Security zone*. The following area is a security zone: All the waters from surface to bottom of the northeastern most mooring dolphin located at approximately 32[deg]05.01′ North, 080[deg]59.38′ West, to the southeastern most mooring dolphin located at approximately 32[deg]04.79′ North, 080[deg]59.35′ West, and continues west along the North and South shoreline of the mooring slip to the shoreline of the right descending bank of the Savannah River. All marine traffic is prohibited from entering this zone unless authorized by the Captain of the Port (COTP).

(b) *Applicability*. This section applies to all vessels including naval and other public vessels, except vessels that are engaged in the following operations:

(1) Law enforcement, security, or search and rescue;

(2) Servicing aids to navigation;

(3) Surveying, maintenance, or improvement of waters in the security zone; or

(4) Actively engaged in escort, maneuvering, or support duties for an LNG tankship.

(c) *Regulations*. In accordance with the general regulations in § 165.33 of this part, entry into or movement within this zone is prohibited unless authorized by the Captain of the Port Savannah or vessels engaged in activities defined in paragraph (b).

(d) *Reporting of violations*. Violations of this section should be reported to the Captain of the Port, Savannah, at (912) 652–4353.

[COTP SAVANNAH 06–160, 72 FR 27246, May 15, 2007]

§ 165.752 Sparkman Channel, Tampa, Florida—regulated navigation area.

(a) A regulated navigation area is established to protect vessels from limited water depth in Sparkman Channel caused by an underwater pipeline. The regulated navigation area is in Sparkman Channel between the lines connecting the following points (referenced in NAD 83):

	Latitude	Longitude		Latitude	Longitude
1:	27°56′20.5″ N	082°26′42.0″ W	to	27°56′19.3″ N	82°26′37.5″ W
2:	27°55′32.0″ N	082°26′54.0″ W	to	27°55′30.9″ N	82°26′49.1″ W

(b) Ships requiring Federal or State pilotage shall not meet or overtake other like vessels in Sparkman Channel.

(c) Vessels having a draft of more than 35.5 feet may not transit Sparkman Channel.

(d) Vessels having a draft of 34.5 feet, but not over 35.5 feet, may transit Sparkman Channel only when the tide is at least one foot above mean low water.

(e) Vessels with a draft of 30 feet or greater shall transit as near as possible to the center of the channel.

[CGD7 90–52, 56 FR 36005, July 30, 1991, as amended by USCG–1998–3799, 63 FR 35532, June 30, 1998]

§ 165.753 Regulated navigation area; Tampa Bay, Florida.

(a) The following is a regulated navigation area (RNA): All the navigable waters of Tampa Bay, Hillsborough Bay and Old Tampa Bay, including all navigable waterways tributary thereto. Also included are the waters of Egmont Channel, Gulf of Mexico from Tampa Bay to the seabuoy, Tampa Lighted Whistle Buoy T, LLNR 18465.

(b) The master, pilot, or person in charge of any vessel of 50 meters or greater shall give a Navigational Advisory Broadcast in accordance with 47 CFR 80.331 on VHF-FM channel 13 at the following broadcast/reporting points:

(1) Prior to getting underway from any berth or anchorage;

(2) Prior to entering Egmont Channel from seaward;

(3) Prior to passing Egmont Key in any direction;

(4) Prior to transiting the Skyway Bridge in either direction;

(5) Prior to transiting the intersection of Tampa Bay Cut F Channel, Tampa Bay Cut G Channel, and Gadsden Point Cut Channel;

(6) Prior to anchoring or approaching a berth for docking;

(7) Prior to tending hawser;

(8) Prior to transiting Point Pinellas Channel Light 1 in either direction.

(c) Each Navigational Advisory required by this section shall be made in the English language and will contain the following information:

(1) The words ''Hello all vessels, a Navigational Advisory follows'';

(2) Name of vessel;

(3) If engaged in towing, the nature of the tow;

(4) Direction of Movement;

(5) Present location; and,

(6) The nature of any hazardous conditions as defined by 33 CFR 160.203.

(d) Nothing in this section shall supersede either the International Regulations for Preventing Collisions at Sea, 1972 (72 COLREGS) or the Inland Navigation Rules, as applicable, or relieve the Master or person in charge of the vessel of responsibility for the safe navigation of the vessel.

[CGD07–94–094, 60 FR 58519, Nov. 28, 1995]

§ 165.754 Safety Zone: San Juan Harbor, San Juan, PR.

(a) *Regulated area.* A moving safety zone is established in the following area:

(1) The waters around Liquefied Petroleum Gas ships entering San Juan Harbor in an area one half mile around each vessel, beginning one mile north of the San Juan Harbor #1 Sea Buoy, in approximate position 18–29.3N, 66–07.6W and continuing until the vessel is safely moored at either the Gulf Refinery

Oil dock or the Catano Oil dock in approximate position 18–25.8N, 66–06.5W. All coordinates referenced use datum: NAD 83.

(2) The waters around Liquefied Petroleum Gas ships departing San Juan Harbor in an area one half mile around each vessel beginning at either the Gulf Refinery Oil dock or Catano Oil dock in approximate position 18–25.8N, 66–06.5W when the vessel gets underway, and continuing until the stern passes the San Juan Harbor #1 Sea Buoy, in approximate position 18–28.3N, 66–07.6W. All coordinates referenced use datum: NAD 83.

(b) *Regulations.* (1) No person or vessel may enter, transit or remain in the safety zone unless authorized by the Captain of the Port, San Juan, Puerto Rico, or a designated Coast Guard commissioned, warrant, or petty officer.

(2) Vessels encountering emergencies which require transit through the moving safety zone should contact the Coast Guard patrol craft on VHF Channel 16. In the event of an emergency, the Coast Guard patrol craft may authorize a vessel to transit through the safety zone with a Coast Guard designated escort.

(3) The Captain of the Port and the Duty Officer at Sector San Juan, Puerto Rico, can be contacted at telephone number 787–289–2041. The Coast Guard Patrol Commander enforcing the safety zone can be contacted on VHF-FM channels 16 and 22A.

(4) Coast Guard Sector San Juan will notify the marine community of periods during which these safety zones will be in effect by providing advance notice of scheduled arrivals and departures of Liquefied Petroleum Gas vessels via a marine broadcast Notice to Mariners.

(5) Should the actual time of entry of the Liquefied Petroleum Gas vessel vary more than one half hour from the scheduled time stated in the broadcast Notice to Mariners, the person directing the movement of the Liquefied Petroleum Gas vessel shall obtain permission from Captain of the Port San Juan before commencing the transit.

(6) All persons and vessels shall comply with the instructions of on-scene patrol personnel. On-scene patrol personnel include commissioned, warrant, or petty officers of the U.S. Coast Guard. Coast Guard Auxiliary and local or state officials may be present to inform vessel operators of the requirements of this section, and other applicable laws.

[COTP SAN JUAN 97–045, 63 FR 27681, May 20, 1998, as amended by USCG–2001–9286, 66 FR 33641, June 25, 2001; USCG–2008–0179, 73 FR 35017, June 19, 2008]

§ 165.755 Safety Zone; Guayanilla, Puerto Rico.

(a) The following area is established as a safety zone during the specified conditions:

(1) A 100 yard radius surrounding a vessel carrying Liquefied Natural Gas (LNG) while transiting north of Latitude 17°56.0′ N in the waters of the Caribbean Sea, on approach to or departure from the Eco-Electrica waterfront facility in Guayanilla Bay, Puerto Rico. The safety zone remains in effect until the LNG vessel is docked at the Eco-Electrica waterfront facility or south of Latitude 17°56.0′ N.

(2) The waters within 150 feet of a LNG vessel when the vessel is alongside the Eco-Electrica waterfront facility in Guayanilla Bay, at position 17°58.55′ N, 066°45.3′ W. This safety zone remains in effect while the LNG vessel is docked with product aboard or is transferring LNG.

(b) In accordance with the general regulations in 165.23 of this part, anchoring, mooring or transiting in these zones is prohibited unless authorized by the Coast Guard Captain of the Port.

(c) Coast Guard Sector San Juan will notify the maritime community of periods during which the safety zones will be in effect by providing advance notice of scheduled arrivals and departures of LNG vessels via a marine broadcast Notice to Mariners.

[COTP San Juan 00–095, 66 FR 16870, Mar. 28, 2001, as amended by USCG–2008–0179, 73 FR 35017, June 19, 2008]

§ 165.756 Regulated Navigation Area; Savannah River, Georgia.

(a) *Regulated Navigation Area (RNA).* The Savannah River between Fort Jackson (32°04.93′ N, 081°02.19′ W) and the Savannah River Channel Entrance Sea Buoy is a regulated navigation

area when an LNG tankship in excess of heel is transiting the area or moored at the LNG facility. All coordinates are North American Datum 1983.

(b) *Definitions*. The following definitions apply to this section:

Bare steerage way means the minimum speed necessary for a ship to maintain control over its heading.

Bollard pull means an industry standard used for rating tug capabilities and is the pulling force imparted by the tug to the towline. It means the power that an escort tug can apply to its working line(s) when operating in a direct mode.

Direct mode means a towing technique defined as a method of operation by which a towing vessel generates towline forces by thrust alone at an angle equal to or nearly equal to the towline, or thrust forces applied directly to the escorted vessel's hull.

Fire Wire means a length of wire rope or chain hung from the bow and stern of a vessel in port to allow the vessel to be towed away from the pier in case of fire; also called fire warp or emergency towing wire.

Heel means the minimum quantity of liquefied natural gas (LNG) retained in an LNG tankship after unloading at the LNG facility to maintain temperature, pressure, and/or prudent operations. A quantity of LNG less than five percent (5 %) of the LNG tankship's carrying capacity shall be presumed to be heel.

Indirect mode means a towing technique defined as a method of operation by which an escorting towing vessel generates towline forces by a combination of thrust and hydrodynamic forces resulting from a presentation of the underwater body of the towing vessel at an oblique angle to the towline. This method increases the resultant bollard pull, thereby arresting and controlling the motion of an escorted vessel.

LNG tankship means a vessel as described in 46 CFR 154.

Made-up means physically attached by cable, towline, or other secure means in such a way as to be immediately ready to exert force on a vessel being escorted.

Make-up means the act of, or preparations for becoming made-up.

Operator means the person who owns, operates, or is responsible for the operation of a facility or vessel.

Savannah River Channel Entrance Sea Buoy means the aid to navigation labeled R W ''T'' Mo (A) WHIS on the National Oceanic and Atmospheric Administration's (NOAA) Nautical Chart 11512.

Standby means readily available at the facility and equipped to provide a ready means of assistance to maintain a safe zone around LNG tankships, provide emergency firefighting assistance, and aid the LNG tankship in the event of an emergency departure.

Underway means that a vessel is not at anchor, not made fast to the shore, or not aground.

(c) *Applicability*. This section applies to all vessels operating within the RNA, including naval and other public vessels, except vessels that are engaged in the following operations:

(1) Law enforcement, security, or search and rescue;

(2) Servicing aids to navigation;

(3) Surveying, maintenance, or improvement of waters in the RNA; or

(4) Actively engaged in escort, maneuvering, or support duties for an LNG tankship.

(d) *Regulations*—(1) *Requirements for vessel operations while a LNG tankship, carrying LNG in excess of heel, is underway within the RNA*. (i) Except for a vessel that is moored at a marina, wharf, or pier, and remains moored, no vessel 1,600 gross tons or greater may come within two nautical miles of a LNG tankship, carrying LNG in excess of heel, which is underway within the Savannah River shipping channel without the permission of the Captain of the Port (COTP).

(ii) All vessels less than 1,600 gross tons shall keep clear of transiting LNG tankships.

(iii) The owner, master, or operator of a vessel carrying liquefied natural gas (LNG) shall:

(A) Comply with the notice requirements of 33 CFR part 160. The COTP may delay the vessel's entry into the RNA to accommodate other commercial traffic.

(B) Obtain permission from the COTP before commencing the transit into the RNA.

(C) Not enter or get underway within the RNA if visibility during the transit is not sufficient to safely navigate the channel, and/or wind speed is, or is expected to be, greater than 25 knots.

(D) While transiting the RNA, the LNG tankship, carrying LNG in excess of heel, shall have a minimum of two escort towing vessels with a minimum of 100,000 pounds of bollard pull, 4,000 horsepower and capable of safely operating in the indirect mode. At least one of the towing vessels shall be FiFi Class 1 equipped.

(2) *Requirements while an LNG tankship is moored outside of the LNG facility slip.* (i) An LNG tankship moored outside of the LNG facility slip shall have on-scene a minimum of two escort towing vessels each with a minimum of 100,000 pounds of bollard pull, 4,000 horsepower and capable of safely operating in the indirect mode in order to escort transiting vessels 1,600 gross tons or greater past the moored LNG tankship. At least one of these towing vessels shall be FiFi Class 1 equipped.

(ii) In addition to the two towing vessels required by paragraph (d)(2)(i) of this section, the LNG tankship moored outside of the slip shall have at least one standby towing vessel with a minimum of 90,000 pounds of bollard pull to take appropriate actions in an emergency as directed by the LNG vessel bridge watch required in paragraph (d)(5) of this section.

(3) *Requirements while LNG tankships are moored inside the LNG facility slip.* (i) An LNG tankship moored inside the LNG facility slip shall have two standby towing vessels with a minimum capacity of 100,000 pounds of bollard pull, 4,000 horsepower, and the ability to operate safely in the indirect mode. At least one of these towing vessels shall be FiFi Class 1 equipped. The standby towing vessels shall take appropriate action in an emergency as directed by the LNG vessel bridge watch required in paragraph (d)(5) of this section.

(ii) If two LNG tankships are moored inside the LNG facility slip, each vessel shall provide a standby towing vessel that is FiFi class 1 equipped with a minimum capacity of 100,000 pounds of bollard pull and 4,000 horsepower that is available to assist as directed by the LNG vessel bridge watch required in paragraph (d)(5) of this section.

(4) *Requirements while LNG tankships are moored both inside the LNG facility slip and outside the LNG facility slip.* (i) When one LNG tankship is moored inside and one LNG tankship is moored outside of the LNG facility slip, the LNG tankship moored outside of the LNG facility slip shall have on-scene a minimum of two escort towing vessels each with a minimum of 100,000 pounds of bollard pull, 4,000 horsepower and capable of safely operating in the indirect mode in order to escort transiting vessels 1,600 gross tons or greater past the moored LNG tankship. At least one of these towing vessels shall be FiFi Class 1 equipped. In addition, the LNG tankship moored inside of the slip shall have at least one standby towing vessel with a minimum of 100,000 pounds of bollard pull, 4,000 horsepower and FiFi Class 1 equipped to take appropriate actions in an emergency as directed by the LNG vessel bridge watch required in paragraph (d)(5) of this section.

(ii) When one LNG tankship is moored outside and two LNG tankships are moored inside the LNG facility slip, the LNG tankship moored outside of the LNG facility slip shall have on-scene a minimum of two escort towing vessels each with a minimum of 100,000 pounds of bollard pull, 4,000 horsepower and capable of safely operating in the indirect mode in order to escort transiting vessels 1,600 gross tons or greater past the moored LNG tankship. At least one of these towing vessels shall be FiFi Class 1 equipped. In addition, the LNG tankships moored inside of the slip shall have at least one standby towing vessel between the two ships with a minimum of 100,000 pounds of bollard pull, 4,000 horsepower and FiFi Class 1 equipped to take appropriate actions in an emergency as directed by the LNG vessel bridge watch required in paragraph (d)(5) of this section.

(iii) In the event of an actual emergency, escort towing vessels can be utilized as stand-by towing vessels to take appropriate actions as directed by the LNG vessel bridge watch required in paragraph (d)(5) of this section.

(5) *Requirements for moored LNG tankships.* (i) While moored within the RNA,

each LNG tankship shall maintain a bridge watch consisting of a docking pilot or licensed deck officer who shall monitor all vessels transiting past the LNG facility. In addition, the LNG Bridge Watch shall communicate with the pilots of vessels greater than 1600 gross tons at the points identified in section (d)(6)(iii) of this section prior to passing the LNG facility in order to take actions of the towing vessel(s) required in paragraphs (d)(2) through (4) of this section.

(ii) While moored within the RNA, LNG tankships shall have emergency towing wires (fire wires) positioned one meter above the waterline, both on the off-shore bow and quarter of the ship. LNG vessels equipped with waterline bollards are exempt from this requirement.

(6) *Requirements for other vessels while within the RNA.* (i) Transiting vessels 1,600 gross tons or greater, when passing an LNG tankship moored outside of the LNG facility slip, shall have a minimum of two towing vessels with a minimum capacity of 100,000 pounds of bollard pull, 4,000 horsepower, and the ability to operate safely in the indirect mode, made-up in such a way as to be immediately available to arrest and control the motion of an escorted vessel in the event of steering, propulsion or other casualty. At least one of the towing vessels shall be FiFi Class 1 equipped. While it is anticipated that vessels will utilize the towing vessel services required in paragraphs (d)(2)(i) and (d)(4)(i) of this section, this section does not preclude escorted vessel operators from providing their own towing vessel escorts, provided they meet the requirements of this part.

(A) Outbound vessels shall be made-up and escorted from Bight Channel Light 46 until the vessel is safely past the LNG dock.

(B) Inbound vessels shall be made-up and escorted from Elba Island Light 37 until the vessel is safely past the LNG dock.

(ii) The requirements in paragraph (d)(6)(i) of this section do not apply when one or more LNG tankships are moored in the LNG facility slip and no LNG tankship is moored at the pier outside of the LNG facility slip.

(iii) Vessels 1,600 gross tons or greater shall make a broadcast on channel 13 at the following points on the Savannah River:

(A) Buoy ''33'' in the vicinity of Fields Cut for inbound vessels;

(B) Buoy ''53'' in the vicinity of Fort Jackson for outbound vessels.

(iv) Vessels 1,600 gross tons or greater shall at a minimum, transit at bare steerageway when within an area 1,000 yards on either side of the LNG facility slip to minimize potential wake or surge damage to the LNG facility and vessel(s) within the slip.

(v) Vessels 1,600 gross tons or greater shall not meet nor overtake within an area 1,000 yards on either side of the LNG facility slip when an LNG tankship is present within the slip.

(vi) All vessels less than 1,600 gross tons shall not approach within 70 yards of an LNG tankship, carrying LNG in excess of heel, without the permission of the Captain of the Port.

(vii) Except for vessels involved in those operations noted in paragraph (c) of this section entitled Applicability, no vessel shall enter the LNG facility slip at any time without the permission of the Captain of the Port.

(e) *Waivers.* (1) The COTP may waive any requirement in this section, if the COTP finds that it is in the best interest of safety or in the interest of national security. Such waivers may be verbal or in writing.

(2) An application for a waiver of these requirements must state the compelling need for the waiver and describe the proposed operation and methods by which adequate levels of safety are to be obtained.

(f) *Enforcement.* Violations of this section should be reported to the Captain of the Port, Savannah, at (912) 652–4353. In accordance with the general regulations in §165.13 of this part, no person may cause or authorize the operation of a vessel in the regulated navigation area contrary to the provisions of this section.

[CGD07–05–138, 72 FR 2453, Jan. 19, 2007]

§ 165.757 Safety Zones; Ports of Ponce, Tallaboa, and Guayanilla, Puerto Rico and Limetree Bay, St. Croix, U.S.V.I.

(a) *Location.* The following areas are established as a safety zones during the specified conditions:

(1) *Port of Ponce, Puerto Rico.* A 100-yard radius surrounding all Liquefied Hazardous Gas (LHG) vessels with product aboard while transiting north of Latitude 17°57.0′ N in the waters of the Caribbean Sea on approach to or departing from the Port of Ponce, Puerto Rico (NAD 83). The safety zone remains in effect until the LHG vessel is docked.

(2) *Port of Tallaboa, Puerto Rico.* A 100-yard radius surrounding all Liquefied Hazardous Gas (LHG) vessels with product aboard while transiting north of Latitude 17°56.0′ N in the waters of the Caribbean Sea on approach to or departing from the Port of Tallaboa, Puerto Rico (NAD 83). The safety zone remains in effect until the LHG vessel is docked.

(3) *Port of Guayanilla, Puerto Rico.* A 100-yard radius surrounding all Liquefied Hazardous Gas (LHG) vessels around with product aboard while transiting north of Latitude 17°57.0′ N in the waters of the Caribbean Sea on approach to or departing from the Port of Guayanilla, Puerto Rico (NAD 83). The safety zone remains in effect until the LHG vessel is docked.

(4) *Port of Limetree Bay, St. Croix, U.S.V.I.* A 100-yard radius surrounding all Liquefied Hazardous Gas (LHG) vessels with product aboard while transiting north of Latitude 17°39.0′ N in the waters of the Caribbean Sea on approach to or departing from the Port of Limetree Bay, U.S.V.I. (NAD 83). The safety zone remains in effect until the LHG vessel is docked.

(b) *Regulations.* In accordance with the general regulations in § 165.23 of this part, anchoring, mooring or transiting in these zones is prohibited unless authorized by the Coast Guard Captain of the Port. Coast Guard Sector San Juan will notify the maritime community of periods during which these safety zones will be in effect by providing advance notice of scheduled arrivals and departures on LHG carriers via a broadcast notice to mariners on VHF Marine Band Radio, Channel 16 (156.8 MHz).

[COTP San Juan 02–038, 67 FR 60867, Sept. 27, 2002, as amended by USCG–2008–0179, 73 FR 35017, June 19, 2008]

§ 165.758 Security Zone; San Juan, Puerto Rico.

(a) *Location.* Moving and fixed security zones are established 50 yards around all cruise ships entering, departing, moored or anchored in the Port of San Juan, Puerto Rico. The security zone for a cruise ship entering port is activated when the vessel is one mile north of the #3 buoy, at approximate position 18°28′17′ N, 66°07′37.5′ W. The security zone for a vessel is deactivated when the vessel passes this buoy on its departure from the port.

(b) *Regulations.* (1) Under general regulations in § 165.33 of this part, entering, anchoring, mooring or transiting in these zones is prohibited unless authorized by the Coast Guard Captain of the Port of San Juan.

(2) Persons desiring to transit the area of the security zone may contact the Captain of the Port at the Sector San Juan at (787) 289–2041 or via VHF radio on Channel 16 to seek permission to transit the area. If permission is granted, all persons and vessels must comply with the instructions of the Captain of the Port or his designated representative.

(3) The Coast Guard Sector San Juan will attempt to notify the maritime community of periods during which these security zones will be in effect by providing advance notice of scheduled arrivals and departures of cruise ships via a broadcast notice to mariners.

(c) *Definition.* As used in this section, *cruise ship* means a passenger vessel greater than 100 feet in length that is authorized to carry more than 150 passengers for hire, except for a ferry.

(d) *Authority.* In addition to 33 U.S.C 1231 and 50 U.S.C. 191, the authority for this section includes 33 U.S.C. 1226.

[CGD07–02–042, 67 FR 76991, Dec. 16, 2002, as amended by USCG–2008–0179, 73 FR 35017, June 19, 2008]

§ 165.759 Security Zones; Ports of Jacksonville, Fernandina, and Canaveral, Florida.

(a) *Regulated area.* Moving security zones are established 100 yards around all tank vessels, cruise ships, and military pre-positioned ships during transits entering or departing the ports of Jacksonville, Fernandina, and Canaveral, Florida. These moving security zones are activated when the subject vessels pass the St. Johns River Sea Buoy, at approximate position 30 deg. 23′ 35″ N, 81 deg, 19′ 08″ West, when entering the port of Jacksonville, or pass Port Canaveral Channel Entrance Buoys # 3 or # 4, at respective approximate positions 28 deg. 22.7 N, 80 deg 31.8 W, and 28 deg. 23.7 N, 80 deg. 29.2 W, when entering Port Canaveral. Fixed security zones are established 100 yards around all tank vessels, cruise ships, and military pre-positioned ships docked in the Ports of Jacksonville, Fernandina, and Canaveral, Florida.

(b) *Regulations.* In accordance with the general regulations § 165.33 of this part, entry into these zones is prohibited except as authorized by the Captain of the Port, or a Coast Guard commissioned, warrant, or petty officer designated by him. The Captain of the Port will notify the public of any changes in the status of this zone by Marine Safety Radio Broadcast on VHF Marine Band Radio, Channel 22 (157.1 MHz).

(c) *Definition.* As used in this section: cruise ship means a passenger vessel, except for a ferry, greater than 100 feet in length that is authorized to carry more than 12 passengers for hire.

(d) *Authority.* In addition to 33 U.S.C. 1231 and 50 U.S.C. 191, the authority for this section includes 33 U.S.C. 1226.

[COTP Jacksonville 02–066, 68 FR 3186, Jan. 23, 2003]

§ 165.760 Security Zones; Tampa Bay, Port of Tampa, Port of Saint Petersburg, Port Manatee, Rattlesnake, Old Port Tampa, Big Bend, Weedon Island, and Crystal River, Florida.

(a) *Location.* The following areas, denoted by coordinates fixed using the North American Datum of 1983 (World Geodetic System 1984), are security zones:

(1) *Rattlesnake, Tampa, FL.* All water, from surface to bottom, in Old Tampa Bay east and south of a line commencing at position 27°53.32′ N, 082°32.05′ W; north to 27°53.36′ N, 082°32.05′ W, including on land portions of Chemical Formulators Chlorine Facility, where the fenced area is bounded by a line connecting the following points: 27°53.21′ N, 082°32.11′ W; west to 27°53.22′ N, 082°32.23′ W; then north to 27°53.25′ N, 082°32.23′ W; then west again to 27°53.25′ N, 082°32.27′ W; then north again to 27°53.29′ N, 082°32.25′ W; then east to 27°53.30′ N, 082°32.16′ W; then southeast terminating at 27°53.21′ N, 082°32.11′ W.

(2) *Old Port Tampa, Tampa, FL.* All waters, from surface to bottom, in Old Tampa Bay encompassed by a line connecting the following points: 27°51.62′ N, 082°33.14′ W; east to 27°51.71′ N, 082°32.5′ W; north to 27°51.76′ N, 082°32.5′ W; west to 27°51.73′ N, 082°33.16′ W; and south to 27°51.62′ N, 082°33.14′ W, closing off the Old Port Tampa channel.

(3) *Sunshine Skyway Bridge, FL.* All waters in Tampa Bay, from surface to bottom, in Cut ''A'' channel beneath the bridge's main span encompassed by a line connecting the following points: 27°37.30′ N, 082°39.38′ W to 27°37.13′ N, 082°39.26′ W; and the bridge structure columns, base and dolphins. This zone is specific to the bridge structure and dolphins and does not include waters adjacent to the bridge columns or dolphins outside of the bridge's main span.

(4) *Vessels carrying hazardous cargo, Tampa, FL.* All waters, from surface to bottom, 200 yards around vessels moored in Tampa Bay carrying or transferring Liquefied Petroleum Gas (LPG), Anhydrous Ammonia (NH3) and/or grade ''A'' and ''B'' flammable liquid cargo. Any vessel transiting within the outer 100 yards of the zone for moored vessels carrying or transferring Liquefied Petroleum Gas (LPG), Anhydrous Ammonia (NH3) and/or grade ''A'' and ''B'' cargo may operate unless otherwise directed by the Captain of the Port or his designee but must proceed through the area at the minimum speed necessary to maintain safe navigation. No vessel may enter the inner 100-yard portion of the security zone closest to the vessel.

(5) *Piers, seawalls, and facilities, Port of Tampa and Port Sutton, Tampa, FL.* All waters, from surface to bottom, extending 50 yards from the shore, seawall, and piers around facilities in Port Sutton within the Port of Tampa encompassed by a line connecting the following points: 27°54.15′ N, 082°26.11′ W; east northeast to 27°54.19′ N, 082°26.00′ W; then northeast to 27°54.37′ N, 082°25.72′ W, closing off all Port Sutton channel; then northerly to 27°54.48′ N, 082°25.70′ W.

(6) *Piers, seawalls, and facilities, Port of Tampa, East Bay and the eastern side of Hooker's Point.* All waters, from surface to bottom, extending 50 yards from the shore, seawall and piers around facilities on East Bay and on the East Bay Channel within the Port of Tampa encompassed by a line connecting the following points: 27°56.05′ N, 082°25.95′ W, southwesterly to 27°56.00′ N, 082°26.07′ W, then southerly to 27°55.83′ N, 082°26.07′ W, then southeasterly to 27°55.55′ N, 082°25.75′ W, then south to 27°54.75′ N, 082°25.75′ W, then southwesterly and terminating at point 27°54.57′ N, 082°25.86′ W.

(7) *Piers, seawalls, and facilities, Port of Tampa, on the western side of Hooker's Point, Tampa, FL.* All waters, from surface to bottom, extending 50 yards from the shore, seawall, and piers around facilities on Hillsborough Bay northern portion of Cut ''D'' channel, Sparkman channel, Ybor Turning Basin, and Ybor channel within the Port of Tampa encompassed by a line connecting the following points: 27°54.74′ N, 082°26.47′ W; northwest to 27°55.25′ N, 082°26.73′ W; then north-northwest to 27°55.60′ N, 082°26.80′ W; then north-northeast to 27°56.00′ N, 082°26.75′ W; then northeast to 27°56.58′ N, 082°26.53′ W; and north to 27°57.29′ N, 082°26.51′ W; west to 27°57.29′ N, 082°26.61′ W; then southerly to 27°56.65′ N, 082°26.63′ W; southwesterly to 27°56.58′ N, 082°26.69′ W; then southwesterly and terminating at 27°56.53′ N, 082°26.90′ W.

(8) *Piers, seawalls, and facilities, Port of Manatee.* All waters, from surface to bottom, within the Port of Manatee extending 50 yards from the shore, seawall and piers around facilities. This security zone encompasses all piers and seawalls of the cruise terminal berths 9 and 10 in Port Manatee, Florida beginning at 27°38.00′ N, 082°33.81′ W; continuing east to 27°38.00′ N, 082°33.53′ W.

(9) *Moving cruise ships in the Port of Tampa, Port of Saint Petersburg, and Port Manatee, Florida.* All waters, from surface to bottom, extending 200 yards around all cruise ships entering or departing Port of Tampa, Port of Saint Petersburg, or Port Manatee, Florida. These temporary security zones are activated on the inbound transit when a cruise ship passes the Tampa Lighted Whistle Buoy ''T'', located at 27°35.35′ N, 083°00.71′ W and terminate when the vessel is moored at a cruise ship terminal. The security zones are activated on the outbound transit when a cruise ship gets underway from a terminal and terminates when the cruise ship passes the Tampa Lighted Whistle Buoy ''T'', located at 27°35.35′ N, 083°00.71′ W. Any vessel transiting within the outer 100 yards of the zone for a cruise ship may operate unless otherwise directed by the Captain of the Port or his designee but must proceed through the area at the minimum speed necessary to maintain safe navigation. No vessel may enter the inner 100-yard portion of the security zone closest to the vessel.

(10) *Moored cruise ships in the Port of Tampa, Port of Saint Petersburg, and Port Manatee, Florida.* All waters, from surface to bottom, extending 200 yards around moored cruise ships in the Ports of Tampa, Saint Petersburg, or Port Manatee, Florida. Any vessel transiting within the outer 100 yards of the zone of moored cruise ships may operate unless otherwise directed by the Captain of the Port or his designee but must proceed through the area at the minimum speed necessary to maintain safe navigation. No vessel may enter the inner 100-yard portion of the security zone closest to the vessel.

(11) *Saint Petersburg Harbor, FL.* All waters, from surface to bottom, extending 50 yards from the seawall and around all moorings and vessels in Saint Petersburg Harbor (Bayboro Harbor), commencing on the north side of the channel at dayboard ''10'' in approximate position 27°45.56′ N, 082°37.55′ W, and westward along the seawall to the end of the cruise terminal in approximate position 27°45.72′ N, 082°37.97′ W. The zone will also include the Coast

Guard south moorings in Saint Petersburg Harbor. The zone will extend 50 yards around the piers commencing from approximate position 27°45.51′ N, 082°37.99′ W; to 27°45.52′ N, 082°37.57′ W. The southern boundary of the zone is shoreward of a line between the entrance to Salt Creek easterly to Green Daybeacon 11 (LLN 2500).

(12) *Crystal River Nuclear Power Plant.* All waters, from surface to bottom, around the Florida Power Crystal River nuclear power plant located at the end of the Florida Power Corporation Channel, Crystal River, Florida, encompassed by a line connecting the following points: 28°56.87′ N, 082°45.17′ W (Northwest corner); 28°57.37′ N, 082°41.92′ W (Northeast corner); 28°56.81′ N, 082°45.17′ W (Southwest corner); and 28°57.32′ N, 082°41.92′ W (Southeast corner).

(13) *Crystal River Demory Gap Channel.* All waters, from surface to bottom, in the Demory Gap Channel in Crystal River, Florida, encompassed by a line connecting the following points: 28°57.61′ N, 082°43.42′ W (Northwest corner); 28°57.53′ N, 082°41.88′ W (Northeast corner); 28°57.60′ N, 082°43.42′ W (Southwest corner); and 28°57.51′ N, 082°41.88′ W (Southeast corner).

(14) *Big Bend Power Plant, FL.* All waters of Tampa Bay, from surface to bottom, adjacent to the Big Bend Power Facility, and within an area bounded by a line connecting the following points: 27°48.08′ N, 082°24.88′ W; then northwest to 27°48.15′ N, 082°24.96′ W; then southwest to 27°48.10′ N, 082°25.00′ W; then south-southwest to 27°47.85′ N, 082°25.03′ W; then southeast to 27°47.85′ N, 082°24.79′ W; then east to 27°47.55′ N, 082°24.04′ W; then north to 27°47.62′ N, 082°84.04′ W; then west to 27°47.60′ N, 082°24.72′ W; then north to 27°48.03′ N, 082°24.70′ W; then northwest to 27°48.08′ N, 082°24.88′ W, closing off entrance to Big Bend Power Facility and the attached cooling canal.

(15) *Weedon Island Power Plant, FL.* All waters of Tampa Bay, from surface to bottom, extending 50-yards from the shore, seawall and piers around the Power Facility at Weedon Island encompassed by a line connecting the following points: 27°51.52′ N, 082°35.82′ W; then north and east along the shore to 27°51.54′ N, 082°35.78′ W; then north to 27°51.68′ N, 082°35.78′ W; then north to 27°51.75′ N, 082°35.78′ W, closing off entrance to the canal; then north to 27°51.89′ N, 082°35.82′ W; then west along the shore to 27°51.89′ N, 082°36.10′ W; then west to 27°51.89′ N, 082°36.14′ W, closing off entrance to the canal.

(b) *Definitions.* As used in this section—

Cruise ship means a vessel required to comply with 33 CFR part 120.

Designated representative means Coast Guard Patrol Commanders including Coast Guard coxswains, petty officers and other officers operating Coast Guard vessels, and federal, state, and local officers designated by or assisting the Captain of the Port (COTP), in the enforcement of regulated navigation areas, safety zones, and security zones.

(c) *Regulation.* (1) Entry into or remaining on or within the zones described in paragraph (a) of this section is prohibited unless authorized by the Captain of the Port Sector St. Petersburg or a designated representative.

(2) Persons desiring to transit the area of the security zone may contact the Captain of the Port Sector St. Petersburg or a designated representative on VHF channel 16 to seek permission to transit the area. If permission is granted, all persons and vessels must comply with the instructions of the Captain of the Port or designated representative. In the case of moving security zones, notification of activation of these zones will be given by Broadcast Notice to Mariners on VHF FM Marine Band Radio, Channel 22A. For vessels not equipped with a radio, there will also be on site notification via a designated representative of the Captain of the Port.

NOTE TO §165.760(c)(2): A graphical representation of all fixed security zones will be made available via the Coast Pilot and nautical charts.

(3) *Enforcement.* Under §165.33, no person may cause or authorize the operation of a vessel in the security zones contrary to the provisions of this section.

(d) *Authority*. In addition to 33 U.S.C. 1231 and 50 U.S.C. 191, the authority for this section includes 33 U.S.C. 1226.

[COTP Tampa 02–053, 68 FR 52342, Sept. 3, 2003, as amended by USCG–2007–0062, 73 FR 1282, Jan. 8, 2008]

§ 165.761 Security Zones; Port of Palm Beach, Port Everglades, Port of Miami, and Port of Key West, Florida.

(a) *Location*. The following areas are security zones:

(1) *Fixed and moving security zones around vessels in the Ports of Palm Beach, Port Everglades, Miami, and Key West, Florida*. Moving security zones are established 100 yards around all passenger vessels, vessels carrying cargoes of particular hazard, or vessels carrying liquefied hazardous gas (LHG) as defined in 33 CFR parts 120, 126 and 127 respectively, during transits entering or departing the Ports of Palm Beach, Port Everglades, Miami or Key West, Florida. These moving security zones are activated when the subject vessel passes: ''LW'' buoy, at approximate position 26°46.3′ N, 080°00.6′ W, when entering the Port of Palm Beach, passes ''PE'' buoy, at approximate position 26°05.5′ N, 080°04.8′ W, when entering Port Everglades; the ''M'' buoy, at approximate position 25°46.1′ N, 080°05.0′ W, when entering the Port of Miami; and ''KW'' buoy, at approximate position 24°27.7′ N, 081°48.1′ W, when entering the Port of Key West. Fixed security zones are established 100 yards around all passenger vessels, vessels carrying cargoes of particular hazard or liquefied hazardous gas (LHG) as defined in 33 CFR parts 120, 126 and 127 respectively, while they are docked in the Ports of Palm Beach, Port Everglades, Miami or Key West, Florida.

(2) *Fixed security zone in the Port of Miami, Florida*. A fixed security zone encompasses all waters between Watson Park and Star Island on the MacArthur Causeway south to the Port of Miami. The western boundary is formed by an imaginary line from points 25°46.79′ N, 080°10.90′ W, to 25°46.77′ N, 080°10.92′ W to 25°46.88′ N, 080°10.84′ W, and ending on Watson Park at 25°47.00′ N, 080°10.67′ W. The eastern boundary is formed by an imaginary line from the traffic light located at Bridge road, in approximate position 25°46.33′ N, 080°09.12′ W, which leads to Star Island, and MacArthur Causeway directly extending across the Main Channel to the Port of Miami, at 25°46.26′ N, 080°09.18′ W. The fixed security zone is activated when two or more passenger vessels, vessels carrying cargoes of particular hazard, or vessels carrying liquefied hazardous gas (LHG) as defined in 33 CFR parts 120, 126 and 127 respectively, enter or moor within this zone.

(i) Vessels may be allowed to transit the Main Channel when only one passenger vessel or vessel carrying cargoes of particular hazard are berthed, by staying on the north side of the law enforcement boats and cruise ship tenders which will mark a transit lane in channel.

(ii) When passenger vessels are not berthed on the Main Channel, navigation will be unrestricted. Law enforcement vessels can be contacted on VHF Marine Band Radio, Channel 16 (156.8 MHz).

(3) *Fixed security zones in the Port Everglades*. A fixed security zone encompasses all waters west of an imaginary line starting at the northern most point 26°05.98′ N, 080°07.15′ W, near the west side of the 17th Street Causeway Bridge, to the southern most point 26°05.41′ N, 080°06.96′ W, on the northern tip of pier 22. An additional fixed security zone encompasses the Intracoastal Waterway between a line connecting point 26°05.41′ N, 080°06.97′ W, on the northern tip of berth 22 and a point directly east across the Intracoastal Waterway to 26°05.41′ N, 080°06.74′ W; and a line drawn from the corner of Port Everglades berth 29 at point 26°04.72′ N, 080°06.92′ W, easterly across the Intracoastal Waterway to John U. Lloyd Beach, State Recreational Area at point 26°04.72′ N, 080°06.81′ W.

(i) Vessels may be allowed to transit the Intracoastal Waterway when passenger vessels or vessels carrying cargoes of particular hazard are berthed, by staying east of the law enforcement vessels and cruise ship tenders, which will mark a transit lane in the Intracoastal Waterway.

(ii) Periodically, vessels may be required to temporarily hold their positions while large commercial traffic

operates in this area. Vessels in this security zone must follow the orders of the COTP or his designated representative, who may be embarked in law enforcement or other vessels on scene. When passenger vessels are not berthed on the Intracoastal Waterway, navigation will be unrestricted. Law enforcement vessels can be contacted on VHF Marine Band Radio, Channel 16 (156.8 MHz).

(b) *Regulations*. (1) Prior to commencing the movement, the person directing the movement of a passenger vessel, a vessel carrying cargoes of particular hazard or a vessel carrying liquefied hazardous gas (LHG) as defined in Title 33, Code of Federal Regulations parts 120, 126 and 127 respectively, is encouraged to make a security broadcast on VHF Marine Band Radio, Channel 13 (156.65 MHz) to advise mariners of the moving security zone activation and intended transit.

(2) In accordance with the general regulations § 165.33 of this part, entry into these zones is prohibited except as authorized by the Captain of the Port Miami or his designated representative. Other vessels such as pilot boats, cruise ship tenders, tug boats and contracted security vessels may assist the Coast Guard Captain of the Port under the direction of his designated representative by monitoring these zones strictly to advise mariners of the restrictions. The Captain of the Port will notify the public via Marine Safety Radio Broadcast on VHF Marine Band Radio, Channel 16 (156.8 MHz) when the security zones are being enforced.

(3) Persons desiring to enter or transit the area of the security zone may contact the Captain of the Port at (305) 535–8701 or on VHF Marine Band Radio, Channel 16 (156.8 MHz) to seek permission to transit the area. If permission is granted, all persons and vessels must comply with the instructions of the Captain of the Port or his or her designated representative.

(4) The Captain of the Port Miami may waive any of the requirements of this subpart for any vessel upon finding that the vessel or class of vessel, operational conditions, or other circumstances are such that application of this subpart is unnecessary or impractical for the purpose of port security, safety or environmental safety.

(c) *Definition*. As used in this section, cruise ship means a passenger vessel greater than 100 feet in length and over 100 gross tons that is authorized to carry more than 12 passengers for hire making voyages lasting more than 24 hours, except for a ferry.

(d) *Authority*. In addition to 33 U.S.C. 1231 and 50 U.S.C. 191, the authority for this section includes 33 U.S.C. 1226.

[COTP Miami 02–115, 68 FR 3189, Jan. 23, 2003]

§ 165.762 Security Zone; St. Thomas, U.S. Virgin Islands.

(a) *Location*. Moving and fixed security zones are established 50 yards around all cruise ships entering, departing, moored or anchored in the Port of St. Thomas, U.S. Virgin Islands. The security zone for a cruise ship entering port is activated when the vessel passes: St. Thomas Harbor green lighted buoy 3 in approximate position 18°19′19″ North, 64°55′40″ West when entering the port using St. Thomas Channel; red buoy 2 in approximate position 18°19′15″ North, 64°55′59″ West when entering the port using East Gregorie Channel; and red lighted buoy 4 in approximate position 18°18′16″ North, 64°57′30″ West when entering the port using West Gregorie Channel. These zones are deactivated when the cruise ship passes any of these buoys on its departure from the Port.

(b) *Regulations*. (1) Under general regulations in § 165.33 of this part, entering, anchoring, mooring or transiting in these zones is prohibited unless authorized by the Coast Guard Captain of the Port of San Juan.

(2) Persons desiring to transit the area of the security zone may contact the Captain of the Port at the Sector San Juan at (787) 289–2041 or via VHF radio on Channel 16 to seek permission to transit the area. If permission is granted, all persons and vessels must comply with the instructions of the Captain of the Port or his designated representative.

(3) Coast Guard Sector San Juan will attempt to notify the maritime community of periods during which these

security zones will be in effect by providing advance notice of scheduled arrivals and departures of cruise ships via a broadcast notice to mariners.

(c) *Definition*. As used in this section, *cruise ship* means a passenger vessel greater than 100 feet in length that is authorized to carry more than 150 passengers for hire, except for a ferry.

(d) *Authority*. In addition to 33 U.S.C 1231 and 50 U.S.C. 191, the authority for this section includes 33 U.S.C. 1226.

[COTP San Juan 03–024, 68 FR 33391, June 4, 2003, as amended by USCG–2008–0179, 73 FR 35017, June 19, 2008]

§ 165.763 Moving and Fixed Security Zone, Port of Fredericksted, Saint Croix, U.S. Virgin Islands.

(a) *Location*. A moving and fixed security zone is established that surrounds all cruise ships entering, departing, mooring or anchoring in the Port of Fredericksted, Saint Croix, U.S. Virgin Islands. The security zone extends from the cruise ship outward and forms a 50-yard radius around the vessel, from surface to bottom. The security zone for a cruise ship entering port is activated when the vessel is within one nautical mile west of the Fredericksted Pier lights. The security zone for a vessel is deactivated when the cruise ship is beyond one nautical mile west of the Fredericksted Pier lights. The Fredericksted Pier lights are at the following coordinates: 17°42′49″ N, 64°53′19″ W. All coordinates are North American Datum 1983 (NAD 1983).

(b) *Regulations*. (1) Under general regulations in § 165.33 of this part, entering, anchoring, mooring, or transiting in these zones is prohibited unless authorized by the Coast Guard Captain of the Port San Juan or their designated representative.

(2) Persons desiring to transit through a security zone may contact the Captain of the Port San Juan who can be reached on VHF Marine Band Radio, Channel 16 (156.8 Mhz) or by calling (787) 289–2041, 24-hours-a-day, 7-days-a-week. If permission is granted, all persons and vessels must comply with the instructions of the Captain of the Port or designated representative.

(3) Sector San Juan will attempt to notify the maritime community of periods during which these security zones will be in effect by providing advance notice of scheduled arrivals and departures of cruise ships via a broadcast notice to mariners.

(c) *Definition*. As used in this section, *cruise ship* means a passenger vessel greater than 100 feet in length that is authorized to carry more than 150 passengers for hire, except for a ferry.

(d) *Authority*. In addition to 33 U.S.C. 1231 and 50 U.S.C. 191, the authority for this section includes 33 U.S.C. 1226.

[COTP San Juan 05–002, 70 FR 22256, Apr. 29, 2005]

§ 165.764 [Reserved]

§ 165.765 Regulated Navigation Area; Port Everglades Harbor, Fort Lauderdale, Florida.

(a) *Location*. The following area in Port Everglades harbor is a regulated navigation area: all waters of Port Everglades harbor, from shore to shore, encompassed by a line commencing at the south mid-point tip of Harbor Heights approximately 26°05.687′ N, 080°06.684′ W; thence south across Bar Cut to a point north of the Nova University Marina approximately 26°05.552′ N, 080°06.682′ W, thence southwesterly to a point near the center of Lake Mabel approximately 26°05.482′ N, 080°06.793′ W, thence northwesterly to a point near the Quick Flashing Red #12 approximately 26°05.666′ N, 080°06.947′ W, thence east to south mid-point tip of Harbor Heights (starting point) approximately 26°05.687′ N, 080°06.684′ W.

(b) *Regulations*. Vessels less than 150 meters entering and transiting through the regulated navigation area shall proceed at a slow speed. Nothing in this section alleviates vessels or operators from complying with all state and local laws in the area including manatee slow speed zones. Nor should anything in this section be construed as conflicting with the requirement to operate at safe speed under the Inland Navigation Rules, 33 U.S.C. 2001 *et seq*.

(c) *Definition*. As used in this section, *slow speed* means the speed at which a vessel proceeds when it is fully off plane, completely settled in the water and not creating excessive wake. Due to the different speeds at which vessels of different sizes and configurations may travel while in compliance with

this definition, no specific speed is assigned to slow speed. A vessel is not proceeding at slow speed if it is:

(1) On a plane;

(2) In the process of coming up on or coming off of plane; or

(3) Creating an excessive wake.

[CDG07–03–069, 68 FR 63991, Nov. 12, 2003]

§ 165.766 Security Zone: HOVENSA Refinery, St. Croix, U.S. Virgin Islands.

(a) *Regulated area.* The Coast Guard is establishing a security zone in and around the HOVENSA Refinery on the south coast of St. Croix, U.S. Virgin Islands. This security zone includes all waters from surface to bottom, encompassed by an imaginary line connecting the following points: Point 1: 17°41′31″ North, 64°45′09″ West, Point 2: 17°39′36″ North, 64°44′12″ West, Point 3: 17°40′00″ North, 64°43′36″ West, Point 4: 17°41′48″ North, 64°44′25″ West, and returning to the point of origin. These coordinates are based upon North American Datum 1983 (NAD 1983).

(b) *Regulations.* (1) Under § 165.33, entry into or remaining in the security zone in paragraph (a) of this section is prohibited unless authorized by the Coast Guard Captain of the Port San Juan or vessels have a scheduled arrival in accordance with the Notice of Arrival requirements of 33 CFR part 160, subpart C.

(2) Persons and vessels desiring to transit the Regulated Area may contact the U.S. Coast Guard Captain of the Port, San Juan, at telephone number 787–289–2041 or on VHF channel 16 (156.8 MHz) to seek permission to transit the area. If permission is granted, all persons and vessels must comply with the instructions of the Captain of the Port.

[COTP San Juan 05–007, 72 FR 43537, Aug. 6, 2007]

§ 165.767 Security Zone; Manbirtee Key, Port of Manatee, Florida.

(a) *Regulated area.* The following area is a security zone: All waters, from surface to bottom, surrounding Manbirtee Key, Tampa Bay, FL extending 500 yards from the island's shoreline, in all directions, not to include the Port Manatee Channel.

(b) *Definitions.* As used in this section, *designated representative* means Coast Guard Patrol Commanders including Coast Guard coxswains, petty officers and other officers operating Coast Guard vessels, and Federal, State, and local officers designated by or assisting the Captain of the Port (COTP), in the enforcement of regulated navigation areas, safety zones, and security zones.

(c) *Regulation.* (1) Entry into or remaining on or within the security zone is prohibited unless authorized by the Captain of the Port Sector St. Petersburg or his designee.

(2) Persons desiring to transit the security zone may contact the Captain of the Port Sector St. Petersburg or his designee on VHF channel 16 to seek permission to transit the area. If permission is granted, all persons and vessels must comply with the instructions of the Captain of the Port or designated representative.

(3) *Enforcement.* Under § 165.33, no person may cause or authorize the operation of a vessel in the security zone contrary to the provisions of this section.

[USCG–2007–0061, 73 FR 3651, Jan. 22, 2008]

§ 165.768 Security Zone; MacDill Air Force Base, Tampa Bay, FL.

(a) *Location.* The following area is a security zone which exists concurrent with an Army Corps of Engineers restricted area in § 334.635 of this title. All waters within Tampa Bay, Florida in the vicinity of MacDill Air Force Base, including portions of the waters of Hillsborough Bay, Old Tampa Bay, and Tampa Bay, encompassed by a line connecting the following coordinates: latitude 27°51′52.901″ N., longitude 82°29′18.329″ W., thence directly to latitude 27°52′00.672″ N., longitude 82°28′51.196″ W., thence directly to latitude 27°51′28.859″ N., longitude 82°28′10.412″ W., thence directly to latitude 27°51′01.067″ N., longitude 2°27′45.355″ W., thence directly to latitude 27°50′43.248″ N., longitude 82°27′36.491″ W., thence directly to latitude 27°50′19.817″ N., longitude 82°27′35.466″ W., thence directly to latitude 27°49′38.865″ N., longitude 82°27′43.642″ W., thence directly to latitude 27°49′20.204″ N., longitude

82°27′47.517″ W., thence directly to latitude 27°49′06.112″ N., longitude 82°27′52.750″ W., thence directly to latitude 27°48′52.791″ N., longitude 82°28′05.943″ W., thence directly to latitude 27°48′45.406″ N., longitude 82°28′32.309″ W., thence directly to latitude 27°48′52.162″ N., longitude 82°29′26.672″ W., thence directly to latitude 27°49′03.600″ N., longitude 82°30′23.629″ W., thence directly to latitude 27°48′44.820″ N., longitude 82°31′10.000″ W., thence directly to latitude 27°49′09.350″ N., longitude 82°32′24.556″ W., thence directly to latitude 27°49′38.620″ N., longitude 82°33′02.444″ W., thence directly to latitude 27°49′56.963″ N., longitude 82°32′45.023″ W., thence directly to latitude 27°50′05.447″ N., longitude 82°32′48.734″ W., thence directly to latitude 27°50′33.715″ N., longitude 82°32’45.220″ W., thence directly to a point on the western shore of the base at latitude 27°50′42.836″ N., longitude 82°32′10.972″ W.

(b) *Definitions*. The following definition applies to this section. *Designated representative* means Coast Guard Patrol Commanders including Coast Guard coxswains, petty officers and other officers operating Coast Guard vessels, and federal, state, and local officers designated by or assisting the Captain of the Port St. Petersburg (COTP), in the enforcement of regulated navigation areas, safety zones, and security zones.

(c) *Regulations*. In accordance with the general regulations in § 165.33 of this part, entry into, anchoring, mooring, or transiting this zone by persons or vessels is prohibited without the prior permission of the Coast Guard Captain of the Port St. Petersburg or a designated representative.

[USCG–2008–0013, 73 FR 6613, Feb. 5, 2008]

§ 165.769 Security Zone; Escorted Vessels, Charleston, South Carolina, Captain of the Port Zone.

(a) *Definitions*. The following definitions apply to this section:

COTP means Captain of the Port Charleston, SC.

Designated representatives means Coast Guard Patrol Commanders including Coast Guard coxswains, petty officers and other officers operating Coast Guard vessels, and federal, state, and local officers designated by or assisting the COTP, in the enforcement of the security zone.

Escorted vessel means a vessel, other than a large U.S. naval vessel as defined in 33 CFR 165.2015, that is accompanied by one or more Coast Guard assets or other Federal, State or local law enforcement agency assets clearly identifiable by lights, vessel markings, or with agency insignia as listed below:

Coast Guard surface or air asset displaying the Coast Guard insignia.

State and/or local law enforcement asset displaying the applicable agency markings and/or equipment associated with the agency.

When escorted vessels are moored, dayboards or other visual indications such as lights or buoys may be used. In all cases, broadcast notice to mariners will be issued to advise mariners of these restrictions.

Minimum safe speed means the speed at which a vessel proceeds when it is fully off plane, completely settled in the water and not creating excessive wake. Due to the different speeds at which vessels of different sizes and configurations may travel while in compliance with this definition, no specific speed is assigned to minimum safe speed. In no instance should minimum safe speed be interpreted as a speed less than that required for a particular vessel to maintain steerageway. A vessel is not proceeding at minimum safe speed if it is:

(1) On a plane;

(2) In the process of coming up onto or coming off a plane; or

(3) Creating an excessive wake.

(b) *Regulated area*. All navigable waters, as defined in 33 CFR 2.36, within the Captain of the Port Zone, Charleston, South Carolina 33 CFR 3.35–15.

(c) *Security zone*. A 300-yard security zone is established around each escorted vessel within the regulated area described in paragraph (b) of this section. This is a moving security zone when the escorted vessel is in transit and becomes a fixed zone when the escorted vessel is anchored or moored. A security zone will not extend beyond the boundary of the regulated area in this section.

(d) *Regulations.* (1) The general regulations for security zones contained in § 165.33 of this part applies to this section.

(2) A vessel may request the permission of the COTP Charleston or a designated representative to enter the security zone described in paragraph (c) of this section. If permitted to enter the security zone, a vessel must proceed at the minimum safe speed and must comply with the orders of the COTP or a designated representative. No vessel or person may enter the inner 50-yard portion of the security zone closest to the vessel.

(e) *Notice of security zone.* The COTP will inform the public of the existence or status of the security zones around escorted vessels in the regulated area by Broadcast Notice to Mariners. Coast Guard assets or other Federal, State or local law enforcement agency assets will be clearly identified by lights, vessel markings, or with agency insignia. When escorted vessels are moored, dayboards or other visual indications such as lights or buoys may be used.

(f) *Contact information.* The COTP Charleston may be reached via phone at (843) 724–7616. Any on scene Coast Guard or designated representative assets may be reached via VHF-FM channel 16.

[USCG–2007–0115, 73 FR 30562, May 28, 2008]

§ 165.770 Security Zone: HOVENSA Refinery, St. Croix, U.S. Virgin Islands.

(a) *Regulated area.* The Coast Guard is establishing a security zone in and around the HOVENSA Refinery on the south coast of St. Croix, U.S. Virgin Islands. This security zone includes all waters from surface to bottom, encompassed by an imaginary line connecting the following points: Point 1 in position 17°41′31″ N, 064°45′09″ W; Point 2 in position 17°39′36″ N, 064°44′12″ W; Point 3 in position 17°40′00″ N, 064°43′36″ W; Point 4 in position 17°41′48″ N, 064°44′25″ W; then tracing the shoreline along the water's edge to the point of origin. These coordinates are based upon North American Datum 1983 (NAD 1983).

(b) *Regulations.* (1) Under § 165.33, entry into or remaining within the regulated area in paragraph (a) of this section is prohibited unless authorized by the Coast Guard Captain of the Port San Juan or vessels have a scheduled arrival at HOVENSA, Limetree Bay, St. Croix, in accordance with the Notice of Arrival requirements of 33 CFR part 160, subpart C.

(2) Persons and vessels desiring to transit the Regulated Area may contact the U.S. Coast Guard Captain of the Port San Juan at telephone number 787–289–2041 or on VHF channel 16 (156.8 MHz) to seek permission to transit the area. If permission is granted, all persons and vessels must comply with the instructions of the Captain of the Port.

[USCG–2008–0284, 73 FR 27746, May 14, 2008]

§ 165.771 Safety Zone; Bahia de Ponce, Puerto Rico.

(a) *Location.* The following area is established as a safety zone during the specified conditions:

(1) A 100 yard radius around any vessel carrying Liquefied Natural Gas (LNG) cargo while transiting north of Latitude 17°54′00″ N in the waters of the Caribbean Sea and the Bahia de Ponce, on approach to or departure from the Puerto de Ponce waterfront facility in Bahia de Ponce.

(2) The waters within 150 feet of any vessel carrying LNG cargo while moored at the Puerto de Ponce waterfront facility in Bahia de Ponce, between berths 4 and 7 at approximate position 17°58′12″ N, 066°37′08″ W.

(b) *Definitions.* The following definitions apply to this section:

Designated representative means Coast Guard Patrol Commander including Coast Guard coxswains, petty officers and other officers operating Coast Guard vessels and federal, state, and local officers designated by or assisting the COTP San Juan in the enforcement of the safety zone.

(c) *Regulations.* In accordance with the general regulations in § 165.23 of this part, anchoring, mooring or transiting in these zones is prohibited unless authorized by the Coast Guard Captain of the Port or a designated representative. Persons and vessels desiring to transit the Regulated Area may contact the U.S. Coast Guard Captain of the Port San Juan at telephone

number 787–289–2041 or on VHF channel 16 (156.9 MHz).

(d) *Enforcement periods.* The Coast Guard will notify the maritime community of effective periods via a broadcast notice to mariners on VHF Marine Band Radio, Channel 22A (156.8 MHz).

[USCG–2007–0075, 73 FR 54951, Sept. 24, 2008]

§ 165.773 Security Zone; Escorted Vessels in Captain of the Port Zone Jacksonville, Florida.

(a) *Definitions.* The following definitions apply to this section:

COTP means Captain of the Port Jacksonville, FL.

Designated representatives means Coast Guard Patrol Commanders including Coast Guard coxswains, petty officers and other officers operating Coast Guard vessels or aircraft, and federal, state, and local officers designated by or assisting the COTP, in the enforcement of the security zone.

Escorted vessel means a vessel, other than a large U.S. naval vessel as defined in 33 CFR 165.2015, that is accompanied by one or more Coast Guard assets or other Federal, State, or local law enforcement agency assets clearly identifiable by lights, vessel markings, or with agency insignia as follows:

(1) Coast Guard surface or air asset displaying the Coast Guard insignia.

(2) State and/or local law enforcement asset displaying the applicable agency markings and/or equipment associated with the agency.

(3) When escorted vessels are moored, dayboards or other visual indications such as lights or buoys may be used. In all cases, broadcast notice to mariners will be issued to advise mariners of these restrictions.

Minimum safe speed means the speed at which a vessel proceeds when it is fully off plane, completely settled in the water and not creating excessive wake. Due to the different speeds at which vessels of different sizes and configurations may travel while in compliance with this definition, no specific speed is assigned to minimum safe speed. In no instance should minimum safe speed be interpreted as a speed less than that required for a particular vessel to maintain steerageway. A vessel is not proceeding at minimum safe speed if it is:

(1) On a plane;

(2) In the process of coming up onto or coming off a plane; or

(3) Creating an excessive wake.

(b) *Regulated area.* All navigable waters, as defined within Captain of the Port Zone, Jacksonville, Florida as defined in 33 CFR 3.35–20.

(c) *Security zone.* A 500-yard security zone is established around each escorted vessel within the regulated area described in paragraph (b) of this section. This is a moving security zone when the escorted vessel is in transit and becomes a fixed zone when the escorted vessel is anchored or moored. A security zone will not extend beyond the boundary of the regulated area in this section.

(d) *Regulations.* (1) The general regulations for security zones contained in § 165.33 of this part applies to this section.

(2) A vessel may request the permission of the COTP or a designated representative to enter the security zone described in paragraph (c) of this section. If permitted to enter the security zone, a vessel must proceed at the minimum safe speed and must comply with the orders of the COTP or a designated representative. No vessel or person may enter the inner 100-yard portion of the security zone closest to the vessel.

(e) *Notice of security zone.* The COTP will inform the public of the existence or status of the security zones around escorted vessels in the regulated area by Broadcast Notice to Mariners. Coast Guard assets or other Federal, State or local law enforcement agency assets will be clearly identified by lights, vessel markings, or with agency insignia. When escorted vessels are moored, dayboards or other visual indications such as lights or buoys may be used.

(f) *Contact information.* The COTP Jacksonville may be reached via phone at (904) 564–7513. Any on scene Coast Guard or designated representative assets may be reached via VHF–FM channel 16.

[USCG–2008–0203, 73 FR 28710, May 19, 2008]

§ 165.775 Safety Zone; Captain of the Port Zone Jacksonville; Offshore Cape Canaveral, Florida.

(a) *Regulated area.* (1) Zone (A) is defined by four latitude and longitude

corner points. Zone A originates from the baseline at position 28°45.7′ N, 080°42.7′ W; then proceeds northeast to 28°50.1′ N, 080°29.9′ W; then proceeds southeast to 28°31.3′ N, 080°19.6′ W; then proceeds west back to the baseline at position 28°31.3′ N, 080°33.4′ W.

(2) Zone (B) is defined by four latitude and longitude corner points. Zone B originates from the baseline at position 28°40.1′ N, 080°38.4′ W; then proceeds northeast to 28°48.8′ N, 080°28.9′ W; then proceeds southeast to 28°29.7′ N, 080°18.9′ W; then proceeds west back to the baseline at position 28°29.7′ N, 080°31.6′ W.

(3) Zone (C) is defined by four latitude and longitude corner points. Zone C originates from the baseline at position 28°36.2′ N, 080°35.3′ W; then proceeds northeast to 28°45.6′ N, 080°25.2′ W; then proceeds south to 28°26′ N, 080°20.8′ W; then proceeds west back to the baseline at position 28°26′ N, 080°34.4′ W.

(4) Zone (D) is defined by four latitude and longitude corner points. Zone D originates from the baseline at position 28°31.6′ N, 080°34′ W; then proceeds east to 28°31.6′ N, 080°20.1′ W; then proceeds south to 28°16.7′ N, 080°23.3′ W; then proceeds northwest back to the baseline at position 28°21.6′ N, 080°36.1′ W.

(b) *Definitions*. The following definitions apply to this section:

Designated representative means Coast Guard Patrol Commanders including Coast Guard coxswains, petty officers and other officers operating Coast Guard vessels, and federal, state, and local officers designated by or assisting the Captain of the Port (COTP) Jacksonville in the enforcement of regulated navigation areas, safety zones, and security zones.

(c) *Regulations*. In accordance with the general regulations in § 165.23 of this part, anchoring, mooring or transiting in this zone is prohibited unless authorized by the Coast Guard Captain of the Port Jacksonville or his designated representative.

(d) *Notice of a safety zone*. The proposed safety zones are temporary in nature and will only be enacted and enforced prior to, and just after a successful launch. The COTP will inform the public of the existence or status of the safety zone(s) by Broadcast Notice to Mariners on VHF–FM channel 16, Public Notice, on-scene presence, and by the display of a yellow ball from a 90-foot pole near the shoreline at approximately 28°35′00″ N, 080°34′36″ W, and from a 90-foot pole near the shoreline at approximately 28°25′18″ N, 080°35′00″ W. Coast Guard assets or other Federal, State, or local law enforcement assets will be clearly identified by lights, markings, or with agency insignia.

(e) *Contact information*. The COTP Jacksonville may be reached by telephone at (904) 564–7513. Any on-scene Coast Guard or designated representative assets may be reached on VHF–FM channel 16.

[USCG–2008–0411, 74 FR 14728, Apr. 1, 2009]

§ 165.776 Security Zone; Coast Guard Base San Juan, San Juan Harbor, Puerto Rico.

(a) *Location*. The following area is a security zone: All waters from surface to bottom, encompassed by an imaginary line connecting the following points, beginning at 18°27′39″ N, 066°06′56″ W; then east to Point 2 at 18°27′39″ N, 066°06′52″ W; then south to Point 3 at 18°27′35″ N, 066°06′52″ W; then southwest to Point 4 at 18°27′30″ N, 066°06′59″ W; then northeast to Point 5 at 18°27′25″ N, 066°07′07″ W; then north to Point 6 at 18°27′46″ N, 066°07′10″ W; then back to shore at the northwest end of the CG facility at Point 7 at 18°27′46″ N, 066°07′07″ W. These coordinates are based upon North American Datum 1983.

(b) *Definitions*. As used in this section—

Vessel means every description of watercraft or other artificial contrivance used, or capable of being used, as a means of transportation on water, except U.S. Coast Guard or U.S. naval vessels.

(c) *Regulations*. (1) No person or vessel may enter into the security zone described in paragraph (a) of this section unless authorized by the Captain of the Port San Juan.

(2) Vessels seeking to enter the security zone established in this section may contact the COTP on VHF channel

16 or by telephone at (787) 289–2041 to request permission.

[USCG–2008–0440, 74 FR 9769, Mar. 6, 2009]

§ 165.777 Security Zone; West Basin, Port Canaveral Harbor, Cape Canaveral, Florida.

(a) *Regulated area*. The following area is a security zone: All waters of the West Basin of Port Canaveral Harbor northwest of an imaginary line between two points: 28°24′57.88″ N, 080°37′25.69″ W to 28°24′37.48″ N, 080°37′34.03″ W.

(b) *Requirement*. (1) This security zone will be activated 4 hours prior to the scheduled arrival of a cruise ship at the West Basin of Port Canaveral Harbor during MARSEC Levels 2 and 3 or when the COTP determines there is a specified credible threat during MARSEC Level 1. This security zone will not be deactivated until the departure of all cruise ships from the West Basin. The zone is subject to enforcement when it is activated.

(2) Under general security zone regulations of 33 CFR 165.33, no vessel or person may enter or navigate within the regulated area unless specifically authorized by the COTP or the COTP's designated representative. Any person or vessel authorized to enter the security zone must operate in strict conformance with any direction given by the COTP or a designated representative and leave the security zone immediately if so ordered.

(3) The public will be notified when the security zone is activated by the display of a red ball on a 50-foot pole located at the east end of Cruise Ship terminal 10. This red ball will be lowered when the security zone is deactivated. To ensure boaters are given sufficient knowledge of the security zone, the Coast Guard will continuously broadcast the activations of the zone and law enforcement vessels will be on scene to inform boaters that the zone has been activated. Vessels encroaching on the security zone will be issued a Public Notice which clearly states the location of the security zone and the times it will be enforced. This will be the boater's first warning prior to enforcement action being taken.

(c) *Definitions*. The following definition applies to this section:

Designated representative means Coast Guard Patrol Commanders including Coast Guard coxswains, petty officers and other officers operating Coast Guard vessels, and federal, state, and local law enforcement officers designated by or assisting the COTP in the enforcement of the security zone.

(d) *Captain of the Port contact information*. If you have questions about this regulation, please contact the Sector Command Center at (904) 564–7513.

(e) *Enforcement periods*. This section will only be subject to enforcement when the security zone described in paragraph (a) is activated as specified in paragraph (b)(1) of this section.

[USCG–2008–0752, 74 FR 15856, Apr. 8, 2009]

§ 165.778 Security Zone; Port of Mayaguez, Puerto Rico.

(a) *Security zone*. A moving and fixed security zone is established around all cruise ships entering, departing, mooring, or anchoring in the Port of Mayaguez, Puerto Rico. The regulated area includes all waters from surface to bottom within a 50-yard radius of the vessel. The zone is activated when a cruise ship on approach to the Port of Mayaguez enters within 1 nautical mile of the Bahia de Mayaguez Range Front Light located in position 18°13′12″ N 067°10′46″ W. The zone is deactivated when a cruise ship departs the Port of Mayaguez and is no longer within 1 nautical mile of the Bahia de Mayaguez Range Front Light.

(b) *Definitions*. As used in this section:

Cruise ship means any vessel over 100 gross registered tons, carrying more than 12 passengers for hire.

Designated representative means Coast Guard Patrol Commanders including Coast Guard coxswains, petty officers and other officers operating Coast Guard vessels and Federal, State, and local officers designated by or assisting the Captain of the Port San Juan in the enforcement of the security zone.

Vessel means every description of watercraft or other artificial contrivance used, or capable of being used, as a means of transportation on water, except U.S. Coast Guard or U.S. Naval vessels and servicing pilot and tug boats.

(c) *Regulations*. (1) No person or vessel may enter into the security zone under this section unless authorized by the Captain of the Port San Juan.

(2) Vessels seeking to enter a security zone established in this section, may contact the COTP on VHF channel 16 or by telephone at (787) 289–2041 to request permission.

(3) All persons and vessels granted permission to enter the security zone must comply with the orders of the Captain of the Port San Juan and designated on-scene U.S. Coast Guard patrol personnel. On-scene U.S. Coast Guard patrol personnel include commissioned, warrant, and petty officers of the U.S. Coast Guard.

(d) *Effective period*. This section is effective on April 29, 2009.

[USCG–2008–0070, 74 FR 14049, Mar. 30, 2009]

§ 165.779 Regulated Navigation Area; Columbus Day Weekend, Biscayne Bay, Miami, FL.

(a) *Regulated area*. The regulated navigation area encompasses all waters of Biscayne Bay between Rickenbacker Causeway Bridge and Coon Point, Elliot Key contained within an imaginary line connecting the following points: beginning at Point 1 in position 25°44′49″ N, 80°12′04″ W; thence southwest to Point 2 in position 25°30′00″ N, 80°15′48″ W; thence southeast to Point 3 in position 25°28′22″ N, 80°15′00″ W; thence east to Point 4 in position 25°28′23″ N, 80°12′53″ W; thence northeast to Point 5 in position 25°30′00″ N, 80°12′06″ W; thence west to Point 6 in position 25°30′00″ N, 80°13′17″ W; thence northwest to Point 7 in position 25°30′53″ N, 80°13′21″ W; thence northeast to Point 8 in position 25°43′57″ N, 80°10′01″ W; thence back to origin. All coordinates are North American Datum 1983.

(b) *Definition*. The term ''designated representative'' means Coast Guard Patrol Commanders, including Coast Guard coxswains, petty officers, and other officers operating Coast Guard vessels, and Federal, state, and local officers designated by or assisting the Captain of the Port Miami in the enforcement of the regulated area.

(c) *Regulations*. (1) All vessels within the regulated area are required to transit at no more than 15 knots, are subject to control by the Coast Guard, and must follow the instructions of designated representatives.

(2) At least 48 hours prior to each enforcement period, the Coast Guard will provide notice of the regulated area through advanced notice via Local Notice to Mariners and Broadcast Notice to Mariners. The Coast Guard will also provide notice of the regulated area by on-scene designated representatives.

(d) *Enforcement period*. This rule will be in enforced annually on Columbus Day weekend, starting at 12:01 p.m. on the Saturday before Columbus Day, through 2:00 a.m. on Monday (the Columbus Day holiday). Columbus Day is the federally recognized holiday occurring annually on the second Monday in October.

[USCG–2012–0191, 77 FR 62439, Oct. 15, 2012]

EIGHTH COAST GUARD DISTRICT

§ 165.T08–0080 Safety Zone; Cincinnati Reds Fireworks Displays Ohio River, Mile 470.1–470.4, Cincinnati, OH.

(a) *Location*. The following area is a temporary safety zone: all waters of the Ohio River, surface to bottom, from mile 470.1 to mile 470.4 on the Ohio River, extending 500 ft. from the State of Ohio shoreline at Cincinnati, Ohio. These markings are based on the United States Army Corps of Engineers' Ohio River Navigation Charts (Chart 115 June 2010).

(b) *Effective dates and enforcement periods*. This safety zone is effective from April 2, 2014 through November 15, 2014, and will be enforced from 9:00 p.m. to 11:30 p.m. on the following dates: April 2 & 11; May 2, 9 & 23; June 6 & 20; July 4, 11 & 25; August 8 & 22; September 5 & 26. Should the Cincinnati Reds make the playoffs and have additional home games, the Coast Guard will provide the game dates and enforcement periods as soon as practicable with advance notification via Broadcast Notices to Mariners, Local Notices to Mariners, and/or Marine Safety Information Bulletins as appropriate.

(c) *Regulations*. (1) In accordance with the general regulations in § 165.23 of

this part, entry into, movement within, or departure from this zone is prohibited unless authorized by the Captain of the Port Ohio Valley or a designated representative.

(2) Persons or vessels requiring entry into, departure from, or movement within a regulated area must request permission from the Captain of the Port Ohio Valley or a designated representative. They may be contacted on VHF–FM Channel 13 or 16, or through Coast Guard Sector Ohio Valley at 1–800–253–7465.

(3) All persons and vessels shall comply with the instructions of the Captain of the Port Ohio Valley and designated on-scene U.S. Coast Guard patrol personnel. On-scene U.S. Coast Guard patrol personnel includes Commissioned, Warrant, and Petty Officers of the U.S. Coast Guard.

(d) *Informational broadcasts.* The COTP Ohio Valley or a designated representative will inform the public through Broadcast Notices to Mariners, Local Notices to Mariners, and/or Marine Safety Information Bulletins as appropriate of the enforcement period for each safety zone as well as any changes in the planned and published dates and times of enforcement.

EFFECTIVE DATE NOTE: By USCG–2014–0080, 79 FR 31870, June 3, 2014, temporary § 165.T08–080 was added, effective from June 3, 2014 until Nov. 15, 2014.

§ 165.T08–0238 Safety Zone; Cincinnati Symphony Orchestra Fireworks Displays Ohio River, Mile 460.9–461.3, Cincinnati, OH.

(a) *Location.* The following area is a temporary safety zone: all waters of the Ohio River, surface to bottom, from mile 460.9 to mile 461.3 on the Ohio River, extending 300 ft. from the State of Ohio shoreline at Cincinnati, Ohio. These markings are based on the United States Army Corps of Engineers' *Ohio River Navigation Charts* (Chart 117 June 2010).

(b) *Effective dates and enforcement periods.* This safety zone is effective from 9:45 p.m. to 10:15 p.m. on June 7, 2014 and from 10:00 p.m. to 10:30 p.m. on July 4, 2014.

(c) *Regulations.* (1) In accordance with the general regulations in § 165.23 of this part, entry into, movement within, or departure from this zone is prohibited unless authorized by the Captain of the Port Ohio Valley or a designated representative.

(2) Persons or vessels requiring entry into, departure from, or movement within a regulated area must request permission from the Captain of the Port Ohio Valley or a designated representative. They may be contacted on VHF–FM Channel 13 or 16, or through Coast Guard Sector Ohio Valley at 1–800–253–7465.

(3) All persons and vessels shall comply with the instructions of the Captain of the Port Ohio Valley and designated on-scene U.S. Coast Guard patrol personnel. On-scene U.S. Coast Guard patrol personnel includes Commissioned, Warrant, and Petty Officers of the U.S. Coast Guard.

(d) *Informational Broadcasts.* The COTP Ohio Valley or a designated representative will inform the public through Broadcast Notices to Mariners, Local Notices to Mariners, and/or Marine Safety Information Bulletins as appropriate of the enforcement period for each safety zone as well as any changes in the planned and published dates and times of enforcement.

EFFECTIVE DATE NOTE: By USCG–2014–0238, 79 FR 31865, June 3, 2014, temporary § 165.T08–0238, was added, effective from 9:45 p.m. on June 7, 2014 until 10:30 p.m. on July 4, 2014.

§ 165.T08–0698 Safety Zone; Port of Galveston, Pelican Island Bridge Repair.

(a) *Definition.* As used in this section, *Public boaters* means all recreational boaters and their vessels.

(b) *Safety Zone.* This area includes all waters of Galveston Channel enclosed within an area extending 50 feet out from the position 29°18′38.23″ N, 094°49′24.84″ W. All coordinates are based on NAD83.

(c) *Effective date.* This rule is effective and will be enforced from October 1, 2013 to December 15, 2015.

(d) *Regulations.* (1) In accordance with the general regulations in § 165.23 of this part, entry into this zone is prohibited to all vessels except participant vessels and those vessels specifically authorized by the Captain of the Port, Houston-Galveston or a designated representative.

(2) Persons or vessels requiring entry into or passage through must request permission from the Captain of the Port, Houston-Galveston, or a designated representative. They may be contacted on VHF Channel 13 or 16, or by telephone at (713) 671–5103.

(3) All persons and vessels shall comply with the instructions of the Captain of the Port, Houston-Galveston, designated representatives and designated on-scene U.S. Coast Guard patrol personnel. On-scene U.S. Coast Guard patrol personnel include commissioned, warrant and petty officers of the U.S. Coast Guard.

EFFECTIVE DATE NOTE: By USCG–2013–0698, 78 FR 61939, Oct. 7, 2013, temporary § 165.T08–0698 was added, effective from Oct. 1, 2013 to Dec. 15, 2015.

§ 165.T08–0994 Security Zone; Mississippi River, New Orleans, LA.

(a) *Location*. Lower Mississippi River, from mile marker 90.0 to mile marker 106.0 above head of passes, extending 100 yards in all directions of escorted vessels.

(b) *Effective date*. This rule is effective in the FEDERAL REGISTER on February 10, 2014 and effective with actual notice for purposes of enforcement on December 31, 2013 through April 14, 2014.

(c) *Periods of enforcement*. This rule will be enforced during vessel escorts performed by Coast Guard assets or other Federal, State or local law enforcement agency assets clearly identified by lights, vessel markings, or agency insignia. The Captain of the Port (COTP) New Orleans or a COTP New Orleans designated representative will inform the public through broadcast notices to mariners of security zone enforcement periods as well as any changes that may occur.

(d) *Regulations*. (1) In accordance with the general regulations in § 165.33 of this part, remaining in, entry into, or transiting within this security zone is prohibited. Section § 165.33 also contains other general requirements.

(2) Vessels requiring deviation from this rule must request permission from the COTP New Orleans through the on-scene Coast Guard or other agency asset, via VHF Ch. 67.

(i) Requests for deviation may include requests to enter, remain in, or transit through certain parts of the security zone. If a deviation from the rule results in permission to enter, remain in, or transit through the security zone, all vessels shall operate at the minimum speed necessary to maintain a safe course, unless required to maintain speed by the Navigation Rules, and shall proceed as directed by the Coast Guard.

(ii) If authorized to operate within the security zone, no vessel or person is allowed within 50 yards of the escorted vessel. A specific request for deviation from this rule to operate within 50 yards of the escorted vessels must be requested and will be considered on a case-by-case basis by the COTP New Orleans.

(3) All persons and vessels shall comply with the instructions of the COTP New Orleans and designated personnel. Designated personnel include commissioned, warrant and petty officers of the U.S. Coast Guard, and local, state, and federal law enforcement officers on clearly identified law enforcement agency vessels.

(4) *Informational broadcasts*. The Captain of the Port or a designated representative will inform the public through marine safety information bulletins or broadcast notices to mariners of the enforcement of the security zone.

[USCG–2013–0994, 79 FR 7587, Feb. 10, 2014]

§ 165.801 Annual fireworks displays and other events in the Eighth Coast Guard District requiring safety zones.

The Coast Guard is establishing safety zones for the annual fireworks displays and other events requiring safety zones listed in the table to § 165.801.

(a) In accordance with the general regulations in § 165 of this part, entry into this zone is prohibited unless authorized by the Captain of the Port or a designated representative.

(b) Persons or vessels desiring to enter into or passage through the zone must request permission from the Captain of the Port or a designated representative.

(c) If permission is granted, all persons and vessels shall comply with the

instructions of the Captain of the Port or designated representative. Designated representatives include commissioned, warrant, and petty officers of the U.S. Coast Guard.

(d) *Informational broadcasts:* The Captain of the Port or a designated representative will inform the public through broadcast notices to mariners of the enforcement period for the safety zone as well as any changes in the planned schedule.

TABLE 1 OF § 165.801—SECTOR OHIO VALLEY ANNUAL AND RECURRING SAFETY ZONES

Date	Sponsor/name	Location	Safety zone
1. Multiple days—April through November.	Pittsburgh Pirates/Pittsburgh Pirates Fireworks.	Pittsburgh, PA	Allegheny River, Mile 00.2–000.8 (Pennsylvania).
2. Multiple days—April through November.	Cincinnati Reds/Cincinnati Reds Season Fireworks.	Cincinnati, OH	Ohio River, Mile 470.1–470.4; extending 500 ft. from the State of Ohio shoreline (Ohio).
3. 2 days—Third Friday and Saturday in April.	Thunder Over Louisville/Thunder Over Louisville.	Louisville, KY	Ohio River, Mile 602.0–606.0 (Kentucky).
4. 3 days—Third weekend in April.	Henderson Tri-Fest/Henderson Breakfast Lions Club.	Henderson, KY	Ohio River, Mile 803.5–804.5 (Kentucky).
5. 1 day—A Saturday in July	Paducah Parks and Recreation Department/Cross River Swim.	Paducah, KY	Ohio River, Mile 934.0–936.0 (Kentucky).
6. 1 Day—First Sunday in June.	West Virginia Symphony Orchestra/Symphony Sunday.	Charleston, WV	Kanawha River, Mile 59.5–60.5 (West Virginia).
7. 1 Day—Saturday before 4th of July.	Riverfest Inc./Saint Albans Riverfest.	St. Albans, WV	Kanawha River, Mile 46.3–47.3 (West Virginia).
8. 1 day—Third or fourth week in July.	Upper Ohio Valley Italian Heritage Festival/Upper Ohio Valley Italian Heritage Festival Fireworks.	Wheeling, WV	Ohio River, Mile 90.0–90.5 (West Virginia).
9. 1 day—Third or fourth of July.	Harrah's Casino/Metropolis Fireworks.	Metropolis, IL	Ohio River, Mile 942.0–945.0 (Illinois).
10. 1 day—During the first week of July.	Louisville Bats Baseball Club/Louisville Bats Firework Show.	Louisville, KY	Ohio River, Mile 603.0–604.0 (Kentucky).
11. 1 day—July 4th	Waterfront Independence Festival.	Louisville, KY	Ohio River, Mile 603.0–604.0 (Kentucky).
12. 1 day—July 4th	Celebration of the American Spirit Fireworks.	Owensboro, KY	Ohio River, Mile 755.0–759.0 (Kentucky).
13. 1 day—July 4th	Riverfront Independence Festival Fireworks.	New Albany, IN	Ohio River, Mile 602.0–603.5 (Indiana).
14. 1 day—July 4th	Downtown Henderson Project/Henderson Independence Bank Fireworks.	Henderson, KY	Ohio River, Mile 803.5–804.5 (Kentucky).
15. 1 day—July 4th	Shoals Radio Group/Spirit of Freedom Fireworks.	Florence, AL	Tennessee River, Mile 255.0–257.0 (Alabama).
16. 1 day—Saturday before July 4th, or on July 4th if that day is a Saturday.	Town of Cumberland City/Lighting Up the Cumberland Fireworks.	Cumberland City, TN	Cumberland River, Mile 103.0–105.0 (Tennessee).
17. 1 day—July 4th	Lake Guntersville Chamber of Commerce/Lake Guntersville 4th of July Celebration.	Guntersville, AL	Tennessee River, Mile 356.0–358.0 (Alabama).
18. 1 day—July 3rd or the weekend before July 3rd if the 3rd is on a weekday.	City of Clarksville/Clarksville Independence Day Fireworks.	Clarksville, TN	Cumberland River, Mile 103.0–105.0 (Tennessee).
19. 1 day—July 4th	Knoxville office of Special Events/Knoxville July 4th Fireworks.	Knoxville, TN	Tennessee River, Mile 647.0–648.0 (Tennessee).
20. 1 day—July 4th	Nashville CVB/Music City July 4th.	Nashville, TN	Cumberland River, Mile 190.0–192.0 (Tennessee).
21. 1 day—Saturday before July 4th, or Saturday after July 4th.	Grand Harbor Marina/Grand Harbor Marina July 4th Celebration.	Counce, TN	Tennessee-Tombigbee Waterway, Mile 450.0–450.5 (Tennessee).
22. 1 day—Second Saturday in July.	City of Bellevue, KY/Bellevue Beach Park Concert Fireworks.	Bellevue, KY	Ohio River, Mile 468.2–469.2 (Kentucky and Ohio).
23. 1 day—Sunday before Labor Day.	Cincinnati Bell, WEBN, and Proctor and Gamble/Riverfest.	Cincinnati, OH	Ohio River, Mile 469.2–470.5 (Kentucky and Ohio).

TABLE 1 OF § 165.801—SECTOR OHIO VALLEY ANNUAL AND RECURRING SAFETY ZONES—Continued

Date	Sponsor/name	Location	Safety zone
24. 1 day—July 4th	Summer Motions Inc./Summer Motion.	Ashland, KY	Ohio River, Mile 322.1–323.1 (Kentucky).
25. 1 day—Last weekend in June or First weekend in July.	City of Point Pleasant/Point Pleasant Sternwheel Fireworks.	Point Pleasant, WV	Ohio River, Mile 265.2–266.2 (West Virginia).
26. 1 day—July 3rd or 4th	City of Charleston/City of Charleston Independence Day Celebration.	Charleston, WV	Kanawha River, Mile 58.1–59.1 (West Virginia).
27. 1 day—July 4th	Civic Forum/Civic Forum 4th of July Celebration.	Portsmouth, OH	Ohio River, Mile 355.5–356.5 (Ohio).
28. 1 day—Second Saturday in August.	Guyasuta Days Festival/Borough of Sharpsburg.	Pittsburgh, PA	Allegheny River, Mile 005.5–006.0 (Pennsylvania).
29. 1 day—Fourth week of August.	Pittsburgh Foundation/Bob O'Connor Cookie Cruise.	Pittsburgh, PA	Ohio River, Mile 0.5–0.0 (Pennsylvania).
30. 1 day—Labor Day weekend.	Knoxville Tourism and Sports Corporation/Boomsday Festival.	Knoxville, TN	Tennessee River, Mile 647.0–648.0 (Tennessee).
31. 1 day—Friday after Thanksgiving.	Chattanooga Presents/Grand Illumination.	Chattanooga, TN	Tennessee River, Mile 463.0–469.0 (Tennessee).
32. 1 day—December 31	Pittsburgh Cultural Trust/Highmark First Night Pittsburgh.	Pittsburgh, PA	Allegheny River Mile, 0.5–1.0 (Pennsylvania).
33. 1 day—Friday before Thanksgiving.	Pittsburgh Downtown Partnership/Light Up Night.	Pittsburgh, PA	Allegheny River, Mile 0.0–1.0 (Pennsylvania).
34. Multiple days—April through November.	Pittsburgh Riverhounds/Riverhounds Fireworks.	Pittsburgh, PA	Monongahela River, Mile 0.22–0.77.
35. 3 days—Second or third weekend in June.	Hadi Shrine/Evansville Freedom Festival Air Show.	Evansville, IN	Ohio River, Miles 791.0–795.0 (Indiana).
36. 1 day—Second or third Saturday in June, the last day of the Riverbend Festival.	Friends of the Festival, Inc./Riverbend Festival Fireworks.	Chattanooga, TN	Tennessee River, Mile 463.5–464.5 (Tennessee).
37. 2 days—Second Friday and Saturday in June.	City of Newport, KY/Italianfest	Newport, KY	Ohio River, Miles 469.6–470.0 (Kentucky and Ohio).
38. 1 day—Last Saturday in June.	City of Aurora/Aurora Firecracker Festival.	Aurora, IN	Ohio River Mile, 496.7; 1400 ft. radius from the Consolidated Grain Dock located along the State of Indiana shoreline at (Indiana and Kentucky).
39. 1 day—second weekend in June.	City of St. Albans/St. Albans Town Fair.	St. Albans, WV	Kanawha River, Mile 46.3–47.3 (West Virginia).
40. 1 day—Saturday before July 4th.	PUSH Beaver County/Beaver County Boom.	Beaver, PA	Ohio River, Mile 024.3–025.1 (Pennsylvania).
41. 1 day—4th of July (Rain date—July 5th).	Monongahela Area Chamber of Commerce/Monongahela 4th of July Celebration.	Monongahela, PA	Monongahela River, Mile 032.0–033.0 (Pennsylvania).
42. 1 day—Saturday of the last full week in July (Rain date—following Sunday).	Oakmont Yacht Club/Oakmont Yacht Club Fireworks.	Oakmont, PA	Allegheny River, Mile 12.0–12.5 (Pennsylvania).
43. 2 days—Week of July 4th	Three Rivers Regatta/Three River Regatta and Fireworks.	Pittsburgh, PA	Ohio River, Mile 0.0–0.5, Allegheny River, Mile 0.0–0.5, and Monongahela River, Mile 0.0–0.5 (Pennsylvania).
44. 1 day—3rd or 4th of July	City of Paducah, KY	Paducah, KY	Ohio River, Mile 931.0–933.0 (Kentucky).
45. 1 day—3rd or 4th of July	City of Hickman, KY	Hickman, KY	Lower Mississippi River, Mile 921.0–923.0 (Kentucky).
46. 1 day—During the first week of July.	Evansville Freedom Celebration.	Evansville, IN	Ohio River, Miles 791.0–795.0 (Indiana).
47. 3 days—One of the first two weekends in July.	Madison Regatta, Inc./Madison Regatta.	Madison, IN	Ohio River, Miles 555.0–560.0 (Indiana).
48. 1 day—July 4th	Cities of Cincinnati, OH and Newport, KY/July 4th Fireworks.	Newport, KY	Ohio River, Miles 469.6–470.2 (Kentucky and Ohio).
49. 2 days—second weekend in July.	Marietta Riverfront Roar/Marietta Riverfront Roar.	Marietta, OH	Ohio River, Mile 171.6–172.6 (Ohio).
50. 1 day—1st weekend in July.	Gallia County Chamber of Commerce/Gallipolis River Recreation Festival.	Gallipolis, OH	Ohio River, Mile 269.5–270.5 (Ohio).

TABLE 1 OF § 165.801—SECTOR OHIO VALLEY ANNUAL AND RECURRING SAFETY ZONES—Continued

Date	Sponsor/name	Location	Safety zone
51. 1 day—July 4th	Kindred Communications/Dawg Dazzle.	Huntington, WV	Ohio River, Mile 307.8–308.8 (West Virginia).
52. 1 day—Last weekend in August.	Swiss Wine Festival/Swiss Wine Festival Fireworks Show.	Ghent, KY	Ohio River, Mile 537 (Kentucky).
53. 1 day—Saturday of Labor Day weekend.	University of Pittsburgh Athletic Department/University of Pittsburgh Fireworks.	Pittsburgh, PA	Allegheny River, Mile 0.0–0.25 (Pennsylvania).
54. Sunday, Monday, or Thursday from September through January.	Pittsburgh Steelers/Steeler Fireworks.	Pittsburgh, PA	Ohio River, Mile 0.3-Allegheny River, Mile 0.2 (Pennsylvania).
56. 1 day—Third weekend in September.	Wheeling Heritage Port Sternwheel Festival Foundation/Wheeling Heritage Port Sternwheel Festival.	Wheeling, WV	Ohio River, Mile 90.2–90.7 (West Virginia).
57. 1 day—First or second weekend in October.	Zambelli Fireworks/American Pyrotechnic Association Annual Convention Fireworks Display.	Louisville, KY	Ohio River, Miles 602.0–606.0 (Kentucky).
58. 1 day—Second weekend of October.	Leukemia and Lymphoma Society/Light the Nights Fireworks.	Nashville, TN	Cumberland River, Mile 190.0–192.0 (Tennessee).
59. 1 day—First week in October.	Leukemia & Lymphoma Society/Light the Night.	Pittsburgh, PA	Ohio River, Mile 0.0–0.4 (Pennsylvania).
60. 1 day—Friday before Thanksgiving.	Duquesne Light/Santa Spectacular.	Pittsburgh, PA	Monongahela River, Mile 0.00–0.22, Allegheny River, Mile 0.00–0.25, and Ohio River, Mile 0.0–0.3 (Pennsylvania).

TABLE 2 OF § 165.801—SECTOR UPPER MISSISSIPPI RIVER ANNUAL AND RECURRING SAFETY ZONES

Date	Sponsor/name	Sector Upper Mississippi River location	Safety zone
1. 1 day—4th weekend of July	Marketing Minneapolis LLC/Target Aquatennial Fireworks.	Minneapolis, MN	Upper Mississippi River mile marker 853.2 to 854.2 (Minnesota).
2. 1 day—4th of July weekend	Radio Dubuque/Radio Dubuque Fireworks and Airs Show.	Dubuque, IA	Upper Mississippi River mile marker 581.0 to 583.0 (Iowa).
3. 2 days—2nd weekend of July.	City of Champlin/Father Hennepin Fireworks Display.	Champlin, MN	Upper Mississippi River mile marker 870.5 to 872.0 (Minnesota).
4. 1 day—4th of July weekend	Downtown Main Street/Mississippi Alumination.	Red Wing, MN	Upper Mississippi River mile marker 790.8 to 791.2 (Minnesota).
5. 1 day—4th of July weekend	Tan-Tar-A Resort/Tan-Tar-A 4th of July Fireworks.	Lake of the Ozarks, MO	Lake of the Ozarks mile marker 025.8 to 026.2 (Missouri).
6. 1 day—1st weekend of September.	Tan-Tar-A Resort/Tan-Tar-A Fireworks.	Lake of the Ozarks, MO	Lake of the Ozarks mile marker 025.8 to 026.2 (Missouri).
7. 1 day—Last Sunday in May	Tan-Tar-A Resort/Tan-Tar-A Memorial Day Fireworks.	Lake of the Ozarks, MO	Lake of the Ozarks mile marker 025.8 to 026.2 (Missouri).
8. 1 day—4th of July weekend	Lake City Chamber of Commerce/Lake City 4th of July Fireworks.	Lake City, MN	Upper Mississippi River mile marker 772.4 to 772.8 (Minnesota).
9. 1 day—4th of July weekend	Greater Muscatine Chamber of Commerce/Muscatine 4th of July.	Muscatine, IA	Upper Mississippi River mile marker 455.0 to 456.0 (Iowa).
10. 1 day—Last weekend in June/First weekend in July.	Friends of the River Kansas City/KC Riverfest.	Kansas City, KS	Missouri River mile marker 364.8 to 365.2 (Kansas).
11. 1 day—4th of July weekend.	Louisiana Chamber of Commerce/Louisiana July 4th Fireworks.	Louisiana, MO	Upper Mississippi River mile marker 282.0 to 283.0 (Missouri).

TABLE 2 OF § 165.801—SECTOR UPPER MISSISSIPPI RIVER ANNUAL AND RECURRING SAFETY ZONES—Continued

Date	Sponsor/name	Sector Upper Mississippi River location	Safety zone
12. 1 day—2nd weekend in July.	Guttenderg Development and Tourism/Stars and Stripes River Day.	Guttenderg, IA	Upper Mississippi River mile marker 614.8 to 615.2 (Iowa).
13. 4 days—1st or 2nd week of July.	Riverfest, Inc./La Crosse Riverfest.	La Crosse, WI	Upper Mississippi River mile marker 697.5 to 698.5 (Wisconsin).
14. 1 day—4th of July weekend.	Hannibal Jaycees/National Tom Sawyer Days.	Hannibal, MO	Upper Mississippi River mile marker 308.0 to 309.0 (Missouri).
15. 1 day—4th of July weekend.	Fort Madison Partner/Fort Madison Fourth of July Fireworks.	Fort Madison, WI	Upper Mississippi River mile marker 383.0 to 384.0 (Wisconsin).
16. 5 days—Last week in June/First week in July.	Taste of Minnesota/Taste of Minnesota.	Minneapolis, MN	Upper Mississippi River mile marker 839.8 to 840.2 (Minnesota).
17. 1 day—4th of July weekend.	John E. Curran/John E. Curran Fireworks.	Lake of the Ozarks, MO	Lake of the Ozarks mile marker 008.8 to 009.2 (Missouri).
18. 1 day—2nd weekend in July.	Prairie du Chien Area Chamber of Commerce/Prairie du Chien Area Chamber Fireworks.	Prairie du Chien, WI	Upper Mississippi River mile marker 633.8 to 634.2 (Wisconsin).
19. 1 day—4th of July weekend.	JMP Radio/Red White and Boom Peoria.	Peoria, IL	Illinois River mile marker 162.5 to 162.1 (Illinois).
20. 1 day—Last weekend in June/First weekend in July.	Hudson Boosters/Hudson Booster Days.	Hudson, WI	St. Croix River mile marker 016.8 to 017.2 (Wisconsin).
21. 2 days—4th of July weekend.	City of St. Charles/St. Charles Riverfest.	St. Charles, MO	Missouri River mile marker 028.2 to 028.8 (Missouri).
22. 1 day—4th of July weekend.	Minneapolis Park and Recreation Board/Red, White, and Boom Minneapolis.	Minneapolis, MN	Upper Mississippi River mile marker 853.5 to 854.5 (Minnesota).
23. 1 day—4th of July weekend.	Davenport One Chamber/Red White and Boom.	Davenport, IA	Upper Mississippi River mile marker 482.0 to 482.7 (Iowa).
24. 2 days—3rd weekend of July.	Amelia Earhart Festival Committee/Amelia Earhart Festival.	Kansas City, KS	Missouri River mile marker 422.0 to 424.5 (Kansas).
25. 1 day—4th of July weekend.	Chillicothe Police Department/Chillicothe 4th of July.	Chillicothe, IL	Illinois River mile marker 179.1 to 180.0 (Illinois).
26. 2 days—2nd weekend in July.	Clinton Riverboat Days/Clinton Riverboat Days.	Clinton, IA	Upper Mississippi River mile marker 518.0 to 519.0 (Iowa).
27. 1 day—4th of July weekend.	Harrah's Casino and Hotel/Harrah's Fireworks Extravaganza.	Omaha, NE	Missouri River mile marker 615.0 to 615.6 (Nebraska).
28. 1 day—4th of July weekend.	Alton Exposition Commission/Mississippi Fireworks Festival.	Alton, IL	Upper Mississippi River mile marker 202.5 to 203.0 (Illinois).
29. 1 day—3rd Sunday in June	Burlington Steamboat Days/Burlington Steamboat Days.	Burlington, IA	Upper Mississippi River mile marker 403.5 to 404.5 (Iowa).
30. 1 day—Last Sunday in May.	Lodge of the Four Seasons/Lodge of the Four Seasons Memorial Day Fireworks.	Lake of the Ozarks, MO	Lake of the Ozarks mile marker 013.8 to 014.2 (Missouri).
31. 1 day—First weekend of September.	Lodge of the Four Seasons/Labor Day Fireworks.	Lake of the Ozarks, MO	Lake of the Ozarks mile marker 013.8 to 014.2 (Missouri).
32. 1 day—4th of July weekend.	Lodge of the Four Seasons/Lodge of the Four Seasons 4th of July.	Lake of the Ozarks, MO	Lake of the Ozarks mile marker 013.8 to 014.2 (Missouri).
33. 2 days—3rd weekend in July.	Hasting Riverboat Days/Rivertown Days.	Hasting, MN	Upper Mississippi River mile marker 813.7 to 815.2 (Minnesota).
34. 1 day—3rd Sunday in June	Winona Steamboat Days/Winona Steamboat Days Fireworks.	Winona, MN	Upper Mississippi River mile marker 725.4 to 725.7 (Minnesota).
35. 2 days—4th of July weekend.	Fair of St. Louis/Fair St. Louis	St. Louis, MO	Upper Mississippi River mile marker 179.2 to 180.0 (Missouri).

TABLE 2 OF § 165.801—SECTOR UPPER MISSISSIPPI RIVER ANNUAL AND RECURRING SAFETY ZONES—Continued

Date	Sponsor/name	Sector Upper Mississippi River location	Safety zone
36. Friday and Saturday, every weekend from the 2nd weekend of July until the 2nd weekend in August.	Fair of St. Louis/Live on the Levee.	St. Louis, MO	Upper Mississippi River mile marker 179.2 to 180.0 (Missouri).
37. 1 day—Last weekend in June/First weekend in July.	Bellevue Heritage Days/Bellevue Heritage Days.	Bellevue, IA	Upper Mississippi River mile marker 556.0 to 556.5 (Iowa).
38. 1 day—4th of July weekend.	Main Street Parkway Association/Parkville 4th of July Fireworks.	Parkville, MO	Missouri River mile marker 378.0 to 377.5 (Missouri).
39. 1 day—4th of July weekend.	Hermann Chamber of Commerce/Hermann 4th of July.	Hermann, MO	Missouri River mile marker 099.0 to 098.0 (Missouri).
40. 1 day—4th of July weekend.	Grafton Chamber of Commerce/Grafton Chamber 4th of July Fireworks.	Grafton, IL	Illinois River mile marker 001.5 to 000.5 (Illinois).
41. 1 day—4th of July weekend.	Salute to America Foundation, Inc./Salute to America.	Jefferson City, MO	Upper Mississippi River mile marker 143.5 to 143.0 (Missouri).
42. 1 day—4th of July weekend.	McGregor/Marquette Chamber Commerce/Independence Day Celebration.	McGregor, IA	Upper Mississippi River mile marker 635.7 to 634.2 (Missouri).
43. 2 days—2nd weekend in August.	Tug Committee/Great River Tug.	Port Byron, IL	Upper Mississippi River mile marker 497.2 to 497.6 (Illinois).
44. 1 day—4th of July weekend.	City of Stillwater/St. Croix Events/Stillwater 4th of July.	Stillwater, MN	St. Croix River mile marker 022.9 to 023.5 (Minnesota).
45. 2 days—3rd weekend of September.	Riverside Riverfest Committee/Riverfest.	Riverside, MO	Missouri River mile marker 372.2 to 371.8 (Missouri).
46. 4 days—3rd week of July	St. Croix Events/Lumberjack Days.	Stillwater, MN	St. Croix River mile marker 022.9 to 023.5 (Minnesota).
47. 1 day—3rd week in July	Rivercade Association/Sioux City Rivercade.	North Sioux City, SD	Missouri River mile marker 732.2 to 732.6 (Iowa).
48. 2 days—3rd weekend in August.	Lake of the Ozarks Shootout, Inc./Lake of the Ozarks Shootout.	Lake of the Ozarks, MO	Lake of the Ozarks mile marker 034.5 to 032.5 (Missouri).
49. 1 day—1st weekend of September.	Camden on the Lakes Labor Day Fireworks/Camden on the Lake.	Lake of the Ozarks, MO	Lake of the Ozarks mile marker 007.1 to 006.9 (Missouri).
50. 2 days—1st weekend of September.	City of Keithsburg/Keithsburg Fireworks Display.	Keithsburg, IL	Upper Mississippi River mile marker 427.5 to 427.3 (Missouri).
51. 1 day—1st weekend of August.	New Piasa Chautauqua/New Piasa Chautauqua.	Elsah, IL	Upper Mississippi River mile marker 215.6 to 216.0 (Illinois).
52. 1 day—last weekend in May.	Horny Toad, Inc./Horny Toad Fireworks Display.	Lake of the Ozarks, MO	Lake of the Ozarks mile marker 006.8 to 007.2 (Missouri).
53. 1 day—4th of July weekend.	Omaha Royals/Omaha World Herald Fireworks.	Omaha, NE	Missouri River mile marker 612.1 to 613.9 (Nebraska).
54. 1 day—Last weekend in July.	Great River Days, Inc./Great River Days.	Muscatine, IA	Upper Mississippi River mile marker 455.0 to 456.0 (Iowa).
55. 1 day—4th of July weekend.	City of East Moline/City of East Moline Fireworks.	East Moline, IA	Upper Mississippi River mile marker 490.2 to 489.8 (Iowa).
56. 2nd Weekend in August	Lansing Lion's Club/Lansing Fish Days Fireworks.	Lansing, IA	Upper Mississippi River mile marker 662.8–663.9 (Iowa).
57. 3rd Weekend in August	River Action/Floatzilla	Rock Island, Illinois	Upper Mississippi River mile marker 479.0–486.0 (Ilinois).

TABLE 3 OF § 165.801—SECTOR HOUSTON-GALVESTON ANNUAL AND RECURRING SAFETY ZONES

Date	Sponsor/name	Sector Houston-Galveston location	Safety zone
1. 1st Saturday (Rain date is 1st Sunday) in May.	RIVERFEST Fireworks Display/Port Neches Chamber of Commerce, Port Neches, TX.	Neches River, Port Neches, TX.	All waters within a 500-yard radius of the fireworks barge anchored in approximate position 29°59′51″ N 093°57′06″ W (NAD 83).
2. 2nd Saturday in May	Contraband Days Fireworks Display/Contraband Days Festivities, Inc.	Lake Charles, Lake Charles, LA.	All waters within a 1000-foot radius of the fireworks barge anchored in approximate position 30°13′39″ N, 093°13′42″ W, Lake Charles, LA (NAD 83).
3. July 4th night and every Friday night in June and July.	Kemah Board Walk Summer Season Fireworks Display, Kemah, TX.	Clear Lake, TX	Clear Creek Channel, including the area within an 840-foot radius of the fireworks barge on the south side of the channel, 100 ft off of Kemah Boardwalk in Galveston, TX and an Rectangle extending 500 feet east, 500 feet west; 1000 feet north, and 1000 feet south, centered around fireworks barge at Light 19 on Clear Lake, Houston, TX.
4. July 4th	Sylvan Beach Fireworks	La Porte, TX	Rectangle Extending 250 feet east, 250 feet west; 1000 feet north, and 1000 feet south, centered around fireworks barge located at Sylvan Beach, Houston, TX.
5. July 4th (Rain date July 5th)	City of Beaumont 4th of July Celebration/City of Beaumont, TX.	Neches River at Riverfront Park, Beaumont, TX.	All waters of the Neches River, shoreline to shoreline, from the Trinity Industries dry dock to the northeast corner of the Port of Beaumont's dock No. 5.
6. 1st Saturday in December ..	Christmas Fireworks Display/City of Lake Charles, LA.	Lake Charles, Lake Charles, LA.	All waters within a 1000-foot radius of the fireworks barge anchored in approximate position 30°13′39″ N, 093°13′42″ W, Lake Charles, LA (NAD 83).
7. 4th of July	Red, White, Blue and You Fireworks Display/City of Lake Charles.	Lake Charles, LA	All waters within a 1000-foot radius of the fireworks barge anchored in approximate position 30°13′39″ N, 093°13′42″ W, Lake Charles, LA (NAD 83).

TABLE 4 OF § 165.801—SECTOR CORPUS CHRISTI ANNUAL AND RECURRING SAFETY ZONES

Date	Sponsor/name	Sector Corpus Christi location	Safety zone
1. Memorial Day Weekend	South Padre Island Convention & Visitors Bureau/Laguna Madre Memorial Day Firework.	Lower Laguna Madre, South Padre Island, TX.	All waters contained within a 1000-ft radius of the fireworks display barge moored at approximate location 26°06′19″ N 097°10′55.4″ W, South Padre Island, TX.
2. 2nd, 3rd or 4th Monday in June.	Cameron County Clerk's Office/Texas District Court Clerk's Convention Fireworks.	Lower Laguna Madre, South Padre Island, TX.	All waters contained within a 1,000-ft radius of the fireworks display barge moored at approximate position 26°06′19″ N 097°10′55.4″ W, South Padre Island, TX.

TABLE 4 OF § 165.801—SECTOR CORPUS CHRISTI ANNUAL AND RECURRING SAFETY ZONES—Continued

Date	Sponsor/name	Sector Corpus Christi location	Safety zone
3. July 4th Rain dates of July 5th and July 6th.	City of Port Aransas/Port Aransas 4th of July Fireworks.	Corpus Christi Ship Channel—Port Aransas, TX.	All waters contained within a 600-ft radius of a point halfway between Port Aransas Harbor Day Beacon 2 to Port Aransas Ferry Landing in the Corpus Christi Ship Channel, Port Aransas, TX.
4. July 4th Rain dates of July 5th and July 6th.	Buccaneer Commission/4th of July Big Bang Fireworks.	USS *Lexington*/Corpus Christi, TX.	All waters contained within a 1,000-ft radius from the bow of the USS *Lexington* located at approximate position 27°48′50″ N 097°23′18.2″ W, Corpus Christi, TX.
5. July 4th Rain dates of July 5th and July 6th.	City of Port O'Connor Chamber of Commerce/4th of July Fireworks.	King Fisher Park, Port O'Connor, TX.	All waters contained within a 1,120-ft radius of the furthest extent of the King Fisher Pier located at approximate position 28°27′15.6″ N 096°24′11.9″ W, Port O′Connor, TX.
6. July 4th Rain dates of July 5th and July 6th.	City of Point Comfort/4th of July Fireworks.	Bayfront Park, Point Comfort, TX.	All waters contained within a 1,000-ft radius of Bayfront Park located at approximate position 28°40′52.8″ W 096°33′49.2″ W, Point Comfort, TX.
7. July 4th Rain dates of July 5th and July 6th.	City of Rockport/Wendell Family Fireworks.	Rockport Beach Park/Rockport, TX.	All waters contained within a 700-ft radius of the northeast point of Rockport Beach Park located at approximate position 28°02′05.2″ N 097°02′048″ W, Rockport, TX.
8. Last Saturday in September	Bayfest, Inc./Bayfest Fireworks.	USS *Lexington*/Corpus Christi, TX.	All waters contained within a 1,000-ft radius from the bow of the USS *Lexington* located at approximate position 27°48′50″ N 097°23′18.2″ W, Corpus Christi, TX.
9. Friday nights from May thru September.	Boys & Girls Club of Laguna Madre/Fireworks over the Bay.	Lower Laguna Madre, South Padre Island, TX.	All waters contained within a 1,000-ft radius of the fireworks display barge moored at approximate position 26°06′19″ N 097°10′55.4″ W, South Padre Island, TX.
10. Labor Day weekend	Laguna Madre Education Foundation/Laguna Madre Labor Day Fireworks.	Lower Laguna Madre, South Padre Island, TX.	All waters contained within a 1,000-ft radius of the fireworks display barge moored at approximate position 26°06′19″ N 097°10′55.4″ W, South Padre Island, TX.
11. 1st or 2nd Friday and Saturday in December.	City of Rockport/Rockport "Tropical" Christmas Festival Fireworks.	Rockport Beach Park/Rockport, TX.	All waters contained within a 700-ft radius of the northeast point of Rockport Beach Park located at approximate position 28°02′05.2″ N 097°02′048″ W, Rockport, TX.
12. December 30th, 31st or Jan 1st.	South Padre Island Convention & Visitors Bureau/SPI New Year's Fireworks.	Lower Laguna Madre, South Padre Island, TX.	All waters contained within a 1,000-ft radius of the fireworks display barge moored at approximate position 26°06′19″ N 097°10′55.4″ W, South Padre Island, TX.

TABLE 4 OF § 165.801—SECTOR CORPUS CHRISTI ANNUAL AND RECURRING SAFETY ZONES—Continued

Date	Sponsor/name	Sector Corpus Christi location	Safety zone
13. Odd Week Fridays from April thru September.	Corpus Christi Hooks Baseball Team/Friday Night Fireworks.	Corpus Christi Ship Channel, Corpus Christi, TX.	All waters contained within a 1,000-ft radius of the Corpus Christi Hooks stadium parking lot located at approximate position 27°48′39.2″ N 097°23′55.2″ W, Corpus Christi, TX.
14. July 4th Rain dates of July 5th and July 6th.	City of South Padre Island/South Padre Island July 4th Fireworks.	Lower Laguna Madre, South Padre Island, TX.	All waters contained within a 1,000-ft radius of the fireworks display barge moored at approximate position 26°06′19″ N 097°10′55.4″ W, South Padre Island, TX.

TABLE 5 OF § 165.801—SECTOR NEW ORLEANS ANNUAL AND RECURRING SAFETY ZONES

Date	Sponsor/name	Sector New Orleans location	Safety zone
1. Monday before Mardi Gras	Riverwalk Marketplace/Lundi Gras Fireworks Display.	Mississippi River, New Orleans, LA.	Mississippi River mile marker 93.0 to 96.0, New Orleans, LA.
2. July 3rd	St. John the Baptist/Independence Day celebration.	Mississippi River, Reserve, LA.	Mississippi River mile marker 175.0 to 176.0, Reserve, LA.
3. July 4th	Riverfront Marketing Group/Independence Day Celebration.	Mississippi River, New Orleans, LA.	Mississippi River mile marker 94.3 to 95.3, New Orleans, LA.
4. July 4th	Boomtown Casino/Independence Day Celebration.	Harvey Canal, Harvey, LA	Harvey Canal mile marker 4.0 to 5.0, Harvey, LA.
5. 4th of July	Independence Day Celebration, Main Street 4th of July (Fireworks Display).	Morgan City, LA	Morgan City Port Allen Route mile marker 0.0 to 1.0, Morgan City, LA.
6. July 4th	WBRZ—The Advocate 4th of July Fireworks Display.	Baton Rouge, LA	In the vicinity of the USS *Kidd,* the Lower Mississippi River from mile marker 228.8 to 230.0, Baton Rouge, LA.
7. The Saturday before July 4th or on July 4th if that day is a Saturday.	Independence Day Celebration/Bridge Side Marine.	Grand Isle, LA	500 Foot Radius from the Pier located at Bridge Side Marine, 2012 LA Highway 1, Grand Isle, LA (Lat: 29°12′14″ N; Long: 090°02′28.47″ W).
8. 1st Weekend of September	LA Shrimp and Petroleum Festival Fireworks Display, LA Shrimp and Petroleum Festival and Fair Association.	Morgan City, LA	Atchafalaya River at mile marker 118.5, Morgan City, LA.
9. 1st Weekend in December (Usually that Friday, subject to change due to weather).	Office of Mayor-President/Downtown Festival of Lights.	Baton Rouge, LA	Located on Left Descending Bank, Lower Mississippi River north of the USS *Kidd,* at mile marker 230, Baton Rouge, LA.
10. December 31st	Crescent City Countdown Club/New Year's Celebration.	Mississippi River, New Orleans, LA.	Mississippi River mile marker 93.5–96.5, New Orleans, LA.
11. December 31st	Boomtown Casino/New Year's Celebration.	Harvey Canal, Harvey, LA	Harvey Canal mile marker 4.0 to 5.0, Harvey, LA.
12. July 4th	USS *Kidd* Veterans Memorial/Fourth of July Star-Spangled Celebration.	Baton Rouge, LA	In the vicinity of the USS *Kidd,* the Lower Mississippi River from mile marker 228.8 to 230.0, Baton Rouge, LA.

TABLE 6 OF § 165.801—SECTOR LOWER MISSISSIPPI RIVER ANNUAL AND RECURRING SAFETY ZONES

Date	Sponsor/name	Sector Lower MS River location	Safety zone
1. The Sunday before Memorial Day.	Riverfest Inc./Riverfest Fireworks display.	Arkansas River, Little Rock, AR.	Regulated Area: Arkansas River mile marker 118.8 to 119.5, Main Street Bridge, Little Rock, AR.
2. The Saturday before Memorial Day.	Memphis in May/Sunset Symphony Fireworks Display.	Lower Mississippi River, Memphis, TN.	Regulated Area: Lower Mississippi River mile marker 735.0 to 736.0, Memphis, TN.
3. July 4th or the weekend before.	Fourth of July Fireworks/ Memphis Center City Commission.	Lower Mississippi River, Memphis, TN.	Regulated Area: Lower Mississippi River mile marker 735.5 to 736.5, Mud Island, Memphis, TN.
4. July 4th or the weekend before.	Pops on the River Fireworks Display/Arkansas Democrat Gazette.	Arkansas River, Little Rock, AR.	Regulated Area: Arkansas River mile marker 118.8 to 119.5, Main Street Bridge, Little Rock, AR.
5. July 4th or the weekend before.	Uncle Sam Jam Fireworks, Alexandria, LA/Champion Broadcasting of Alexandria.	Red River, Alexandria, LA	Regulated Area: Red River mile marker 83.0 to 87.0, Alexandria, LA.
6. July 4th or the weekend before.	Greenville Chamber of Commerce/Fourth of July Fireworks.	Lake Ferguson, Greenville, MS.	Regulated Area: Waters of Lake Ferguson extending 500 yards in all directions from the concrete pad, 33°24′34″ N, 091°03′58″ W, adjacent to the Lighthouse Casino, Greenville, MS.
7. July 4th or the weekend before.	Pyro Fire Inc./Fourth of July Celebration.	Yazoo River, Vicksburg, MS ..	Regulated Area: Yazoo River, mile marker 1.0 to 3.0, Vicksburg, MS.
8. July 4th or the weekend before.	Artisan Pyro Inc./Fourth of July Celebration.	Lower Mississippi River, Natchez, MS.	Regulated Area: Lower Mississippi River, mile marker 365.5 to 364.5, Natchez, MS.
9. Third Friday and Saturday in October	The Great Mississippi River Balloon Race and Fireworks show/Great Mississippi River Balloon Race Committee.	Lower Mississippi River, Natchez, MS.	Regulated Area: Lower Mississippi River, mile marker 365.5 to 364.5, Natchez, MS.
10. Fourth Saturday in May	Memphis in May Air Show, Memphis in May.	Lower Mississippi River, Memphis, TN.	Regulated Area: Lower Mississippi River, mile marker 733.0 to 735.5, Memphis, TN.
11. First Saturday in December.	Monroe Christmas Fireworks/ Monroe Jaycee.	Ouachita River, Monroe, LA ..	Regulated Area: Ouachita River mile marker 168.0 to 169.0, Monroe, LA.
12. 4th of July Weekend	Monroe Renaissance	Ouachita River, Monroe, LA ..	Regulated Area: Ouachita River mile marker 168.0 to 169.0, Monroe, LA.

TABLE 7 OF § 165.801—SECTOR MOBILE ANNUAL AND RECURRING MARINE EVENTS

Date	Sponsor/name	Sector Mobile location	Safety zone
1. 1 Day; 1st week of January	GoDaddy Bowl/GoDaddy.com	Mobile Channel, Mobile, AL ...	Mobile Channel, all waters extending 200 yards in all directions from a fireworks display barge located in the Mobile Channel between the Arthur R. Outlaw Convention Center and Cooper Riverside Park.
2. Multiple dates from May to December.	Harbor Walk Seasonal Fireworks/Legendary, Inc.	East Pass to Choctawhatchee Bay, Destin, FL.	East Pass to Choctawhatchee Bay, all waters extending 700′ in all directions from a fireworks display barge located in the East Pass.

TABLE 7 OF § 165.801—SECTOR MOBILE ANNUAL AND RECURRING MARINE EVENTS—Continued

Date	Sponsor/name	Sector Mobile location	Safety zone
3. 2 Days; 1st weekend in June.	Billy Bowlegs Pirate Festival/ Greater Fort Walton Beach Chamber of Commerce.	Santa Rosa Sound, Ft. Walton Beach, FL.	Santa Rosa Sound, all waters extending 150 yards around a fireworks display barge that will be located between Fort Walton Beach Landing and the Gulf Intracoastal Waterway.
4. July 4th	Niceville July 4th Fireworks Show/City of Niceville, FL.	Boggy Bayou, Niceville, FL	Boggy Bayou, all waters extending 250 yards around a fireworks display barge that will be located west of the Dockside Café & Oyster Bar and Allen's Little Marina.
5. July 4th	Fourth of July Celebration/ City of Fort Walton Beach.	Santa Rosa Sound, Fort Walton Beach.	Santa Rosa Sound, all waters extending 100 yards around a fireworks display barge that will be located between Fort Walton Beach Landing and the Gulf Intracoastal Waterway.
6. 1 Day; Last week in June or 1st week of July.	Sound of Independence/ Hurlburt Field AFB.	Santa Rosa Sound, Mary Esther, FL.	Santa Rosa Sound, all waters extending 200 yards around a fireworks display barge that will be located south of Hurlburt Field.
7. July 4th	Biloxi Bay Fireworks/Biloxi Bay Chamber of Commerce.	Biloxi Bay, Biloxi, MS	Biloxi Bay, all waters extending 200 yards around a fireworks display barge that will be located south of the Biloxi Channel, between channel markers R''20'' and R''22'' and north of Deer Island.
8. December 31st/January 1st	New Year's Eve Celebration/ City of Mobile.	Mobile Channel, Mobile, AL	Mobile Channel, all waters extending 200 yards in all directions from a fireworks display barge located in the Mobile Channel between the Arthur R. Outlaw Convention Center and Cooper Riverside Park.
9. Biannually occurring during odd numbered years; 2 Days; Mid-March to end of April.	Angels Over the Bay/Keesler Air Force Base.	Back Bay Biloxi, Biloxi, MS	Back Bay Biloxi, Bounded by the following coordinates: Eastern boundary; Latitude 30°25′47.6″ N, Longitude 088°54′13.6″ W, to Latitude 30°24′43″ N, Longitude 088°54′13.6″ W. Western Boundary; Latitude 30°25′25.6″ N, Longitude 088°56′9″ W, to Latitude 30°24′55″ N, Longitude 088°56′9″ W.
10. 4 Days; 2nd weekend in July.	Pensacola Beach Air Show/ Santa Rosa Island Authority.	Gulf of Mexico & Santa Rosa Sound, Pensacola, FL.	Gulf of Mexico to include all waters 1.75 nautical miles east and 1.5 nautical miles west of position 30°19′36″ N, 087°08′23″ W and extending 1000 yards south of Pensacola Beach creating a box, referred to as the ''Show Box''. Santa Rosa Sound to include all waters from Deer Point to Sharp Point and all waters within Little Sabine Bay.

[USCG–2011–0286, 77 FR 12465, Mar. 1, 2012; 77 FR 28767, May 16, 2012, as amended by USCG–2013–1060, 79 FR 22404, Apr. 22, 2014]

§ 165.802 Lower Mississippi River, vicinity of Old River Control Structure—Safety Zone.

(a) The area enclosed by the following boundary is a safety zone—from the Black Hawk Point Light, mile 316.1 AHP LMR to a point opposite Ft. Adams Light, mile 311.5 AHP along the low water reference plane above the right descending bank; thence to the levee on a line perpendicular to the channel centerline; thence along the levee to the upstream end of the Old River Overbank structure; thence along a line to the Black Hawk Point Light.

(b) Any vessel desiring to enter this safety zone must first obtain permission from the Captain of the Port, New Orleans. The resident engineer at Old River Control Structure (WUG–424) is delegated the authority to permit entry into this safety zone.

[CGD8–87–10, 53 FR 15207, Apr. 28, 1988, as amended by CGD8 89–03, 54 FR 16108, Apr. 21, 1989]

§ 165.803 Mississippi River—regulated navigation area.

The following is a Regulated Navigation Area—The waters of the Mississippi River between miles 88 and 240 above Head of Passes.

(a) *Definitions.* As used in this section:

(1) *Breakaway* means a barge that is adrift and is not under the control of a towing vessel.

(2) *COTP* means the Captain of the Port, New Orleans.

(3) *Fleet* includes one or more tiers.

(4) *Fleeting facility* means the geographic area along or near a river bank at which a barge mooring service, either for hire or not for hire, is established.

(5) *Mooring barge* or *spar barge* means a barge moored to mooring devices and to which other barges may be moored.

(6) *Mooring device* includes a deadman, anchor, pile or other reliable holding apparatus.

(7) *Person in charge* includes any owner, agent, pilot, master, officer, operator, crewmember, supervisor, dispatcher or other person navigating, controlling, directing or otherwise responsible for the movement, action, securing, or security of any vessel, barge, tier, fleet or fleeting facility subject to the regulations in this section.

(8) *Tier* means barges moored interdependently in rows or groups.

(b) *Waivers:* (1) The COTP may, upon written request, except as allowed in paragraph (3) of this subsection, waive any regulation in this section if it is found that the proposed operation can be conducted safely under the terms of that waiver.

(2) Each written request for a waiver must state the need for the waiver and describe the proposed operation.

(3) Under unusual circumstances due to time constraints, the person in charge may orally request an immediate waiver from the COTP. The written request for a waiver must be submitted within five working days after the oral request.

(4) The COTP may, at any time, terminate any waiver issued under this subsection.

(c) *Emergencies.* In an emergency, a person may depart from any regulation in this section to the extent necessary to avoid immediate danger to persons, property or the environment.

(d) *Mooring: General.* (1) No person may secure a barge to trees or to other vegetation.

(2) No person may allow a barge to be moored with unraveled or frayed lines or other defective or worn mooring.

(3) No person may moor barges side to side unless they are secured to each other from fittings as close to each corner of abutting sides as practicable.

(4) No person may moor barges end to end unless they are secured to each other from fittings as close to each corner of abutting ends as practicable.

(e) *Mooring to a mooring device.* (1) A barge may be moored to mooring devices if the upstream end of that barge is secured to at least one mooring device and the downstream end is secured to at least one other mooring device, except that from mile 127 to mile 240 a barge may be moored to mooring devices if the upstream end of that barge is secured to at least one mooring device.

(2) Barges moored in tiers may be shifted to mooring devices if the shoreward barge at the upstream end of the tier is secured to at least one mooring device, and the shoreward barge at the

downstream end of the tier is secured to at least one other mooring device, except that from mile 127 to mile 240 barges moored in tiers may be shifted to mooring devices if the shoreward barge at the upstream end of the tier is secured to at least one mooring device.

(3) Each wire rope used between the upstream end of a barge and a mooring device must have at least a diameter of 1¼ inch. Chain or line used between the upstream end of a barge and a mooring device must be at least equivalent in strength to 1¼ inch diameter wire rope.

(4) Each wire rope used between the downstream end of a barge and a mooring device must have at least a diameter of ⅞ inch. Chain or line used between the downstream end of a barge and a mooring device must be of at least equivalent strength of ⅞ inch diameter wire rope.

(f) Moorings: Barge-to-barge; barge-to-vessel; barge-to-wharf or pier. The person in charge shall ensure that a barge moored to another barge, a mooring or spar barge, a vessel, a wharf, or a pier, is secured as near as practicable to each abutting corner of the barge being moored by:

(1) Three parts of wire rope of at least ⅞ inch diameter with an eye at each end of the rope passed around the timberhead, caval, or button;

(2) A mooring of natural or synthetic fiber rope that has at least 75 percent of the breaking strength of three parts of ⅞ inch diameter wire rope; or

(3) Fixed rigging that is at least equivalent to three parts of ⅞ inch diameter wire rope.

(g) *Mooring: Person in charge.* (1) The person in charge of a barge, tier, fleet or fleeting facility shall ensure that the barge, tier, fleet or fleeting facility meets the requirements in paragraphs (d) and (e) of this section.

(2) The person in charge shall ensure that all mooring devices, wires, chains, lines and connecting gear are of sufficient strength and in sufficient number to withstand forces that may be exerted on them by moored barges.

(h) *Fleeting facility: inspection of moorings.* (1) The person in charge of a fleeting facility shall assign a person to inspect moorings in accordance with the requirements in paragraph (h)(2) of this section.

(2) The person assigned to inspect moorings shall inspect:

(i) At least twice each day during periods that are six hours or more apart, each mooring wire, chain, line and connecting gear between mooring devices and each wire, line and connecting equipment used to moor each barge; and

(ii) After a towboat adds barges to, withdraws barges from, or moves barges at a fleeting facility, each mooring wire, line, and connecting equipment of each barge within each tier affected by that operation.

(3) The person who inspects moorings shall take immediate action to correct each deficiency.

(i) *Fleeting facility: Records.* The person in charge of a fleeting facility shall maintain, and make available to the Coast Guard, records containing the following information:

(1) The time of commencement and termination of each inspection required in paragraph (h)(2) of this section.

(2) The name of each person who makes the inspection required in paragraph (h)(2) of this section.

(3) The identification of each barge entering and departing the fleeting facility, along with the following information:

(i) Date and time of entry and departure; and

(ii) The names of any hazardous cargo which the barge is carrying.

NOTE: The requirements in paragraph (i)(3) of this section for the listing of hazardous cargo refer to cargoes regulated by Subchapters D and O of Chapter I, Title 46, Code of Federal Regulations.

(j) *Fleeting facility: Surveillance.* (1) The person in charge of a fleeting facility shall assign a person to be in continuous surveillance and to observe the barges in the fleeting facility. Joint use of this person by adjacent facilities may be considered upon submission of a detailed proposal for a waiver to the COTP.

(2) The person who observes the barges shall:

(i) Inspect for movements that are unusual for properly secured barges; and

(ii) Take immediate action to correct each deficiency.

(k) *Fleeting facility: person in charge.* The person in charge of a fleeting facility shall ensure that each deficiency found under the requirements of paragraph (h) or (j) of this section is corrected.

(l) *Securing breakaways.* The person in charge shall take immediate action to:

(1) Secure each breakaway; and

(2) Report each breakaway as soon as possible to the COTP by telephone, radio or other means of rapid communication.

(m) *High water.* (1) This subsection applies to barges on the Mississippi River between miles 88 and 240 above Head of Passes when:

(i) The Carrollton gage stands 12 feet or more; or

(ii) The Carrollton gage stands 10 feet, the U.S. Army Corps of Engineers forecasts the Mississippi River is rising to 12 feet, and the District Commander determines these circumstances to be especially hazardous and issues orders directing that paragraphs (m)(2) and (3) of this section are in effect.

(2) During high water, the person in charge of a fleeting facility shall ensure compliance with the following requirements:

(i) Each fleet consisting of eight or more barges must be attended by at last one radar-equipped towboat for each 100 barges or less. Joint use of this towboat by adjacent facilities may be considered upon submission of a detailed proposal for a waiver.

(ii) Each fleet must have two or more towboats in attendance when:

(A) Barges are withdrawn from or moved within the fleet and the fleet at the start of the operation contains eight or more barges; or

(B) Barges are added to the fleet and the number of barges being added plus the fleet at the start of the operation total eight or more.

(iii) Each towboat required in paragraphs (m)(2)(i) and (2)(ii) of this section must be:

(A) Capable of safely withdrawing, moving or adding each barge in the fleet;

(B) Immediately operational;

(C) Radio-equipped;

(D) Within 500 yards of the barges; and

(iv) The person in charge of each towboat required in paragraphs (m)(2)(i) and (2)(ii) of this section shall maintain:

(A) A continuous guard on the frequency specified by current Federal Communications Commission regulations found in Part 83 of Title 47, Code of Federal Regulations; and

(B) When moored, a continuous watch on the barges in the fleeting facility.

(v) During periods when visibility is less than 200 yards, the person in charge of each towboat required in paragraph (m)(2)(i) of this subsection shall maintain, when moored, a continuous radar surveillance of the barges moored in the fleeting facility.

(3) During high water when visibility is reduced to less than 200 yards:

(i) Tows may not be assembled or disassembled;

(ii) No barge may be added to, withdrawn from or moved within a fleet except:

(A) A single barge may be added to or withdrawn from the channelward or downstream end of the fleet; and

(B) Barges made up in a tow may depart a fleet from the channelward or downstream end of the fleet; and

(iii) No person in charge of a tow arriving in this regulated navigation area may moor unless the COTP is notified prior to arrival in the regulated navigation area.

[CGD 79–034, 47 FR 29660, July 8, 1982, as amended by CGD 82–020, 47 FR 35483, Aug. 16, 1982; CGD 79–026, 48 FR 35408, Aug. 4, 1983; CGD 88–075, 54 FR 14958, Apr. 14, 1989; CGD08–94–006, 59 FR 21935, Apr. 28, 1994; CGD08–94–006, 60 FR 37944, July 25, 1995]

§ 165.804 Snake Island, Texas City, Texas; mooring and fleeting of vessels—safety zone.

(a) The following is a safety zone:

(1) The west and northwest shores of Snake Island;

(2) The Turning Basin west of Snake Island;

(3) The area of Texas City Channel from the north end of the Turning Basin to a line drawn 000° true from the northwesternmost point of Snake Island.

(b) *Special regulations.* All vessels are prohibited from mooring, anchoring, or otherwise stopping in the safety zone, except in case of an emergency.

(c) Barges are prohibited from fleeting or grounding in the zone.

(d) In an emergency, vessels shall advise the Captain of the Port, Houston-Galveston, of the nature of the emergency via the most rapid means available.

[CGD 79–034, 47 FR 29660, July 8, 1982, as amended by USCG–2000–7223, 65 FR 40058, June 29, 2000]

EFFECTIVE DATE NOTE: By USCG–2014–0034, 79 FR 19292, Apr. 8, 2014, §165.804 was removed, effective July 7, 2014.

§ 165.805 Security Zones; Calcasieu River and Ship Channel, Louisiana.

(a) *Location.* (1) The following areas are designated as fixed security zones (all coordinates are based upon North American Datum of 1983 [NAD 83]):

(i) *Trunkline LNG basin.* All waters encompassed by a line connecting the following points, beginning at 30°06′36″ N, 93°17′36″ W, south to a point 30°06′33″ N, 93°17′36″ W, east to a point 30°06′30″ N, 93°17′02″ W, north to a point 30°06′33″ N, 93°17′01″ W, then tracing the shoreline along the water's edge to the point of origin.

(ii) *Cameron LNG basin.* All waters encompassed by a line connecting the following points, beginning at 30°02′33″ N, 093°19′53″ W, east to a point at 30°02′34″ N, 093°19′50″ W, south to a point at 30°02′10″ N, 093°19′52″ W and west to a point at 30°02′10″ N, 93°19′59″ W, then tracing the shoreline along the water's edge to the point of origin.

(iii) *PPG Industries basin.* All waters encompassed by a line connecting the following points: Beginning at 30°13′29″ N, 93°16′34″ W, southwest to a point at 30°13′11″ N, 93°16′51″ W, then proceeding southerly following 100 feet off the shoreline to a point at 30°12′57.2″ N, 93°16′53.2″ W, then east to a point at 30°12′57.2″ N, 93°16′50.6″ W then southerly to a point at 30°12′47.7″ N, 93°16′50.3″ W then west to the shoreline and then following along the water's edge to the point of origin.

(2) The following areas are moving security zones: All waters within the Captain of the Port, Port Arthur zone commencing at U.S. territorial waters and extending channel edge to channel edge on the Calcasieu Channel and shoreline to shoreline on the Calcasieu River, 2 miles ahead and 1 mile astern of certain designated vessels while in transit. Meeting, crossing or overtaking situations are not permitted within the security zone unless specifically authorized by the Captain of the Port. Coast Guard patrol assets will be on scene with flashing blue lights energized when the moving security zones are in effect.

(b) *Regulations.* (1) Entry into or remaining in a fixed zone described in paragraph (a)(1) of this section is prohibited for all vessels except:

(i) Commercial vessels operating at waterfront facilities within these zones;

(ii) Commercial vessels transiting directly to or from waterfront facilities within these zones;

(iii) Vessels providing direct operational or logistical support to commercial vessels within these zones;

(iv) Vessels operated by the appropriate port authority or by facilities located within these zones; and

(v) Vessels operated by federal, state, county, or municipal agencies.

(2) Entry into or remaining in moving zones described in paragraph (a)(2) of this section is prohibited for all vessels except:

(i) Moored vessels or vessels anchored in a designated anchorage area. A moored or an anchored vessel in a security zone described in paragraph (a)(2) of this section must remain moored or anchored unless it obtains permission from the Captain of the Port to do otherwise;

(ii) Commercial vessels operating at waterfront facilities located within the zone;

(iii) Vessels providing direct operational support to commercial vessels within a moving security zone;

(iv) Vessels operated by federal, state, county, or municipal agencies.

(3) Other persons or vessels requiring entry into security zones described in this section must request permission from the Captain of the Port, Port Arthur or designated representatives.

(4) To request permission as required by these regulations, contact Marine

Safety Unit Lake Charles at (337) 491–7800 or the on scene patrol vessel.

(5) All persons and vessels within a security zone described in this section must comply with the instructions of the Captain of the Port, Port Arthur, designated on-scene U.S. Coast Guard patrol personnel or other designated representatives. On-scene U.S. Coast Guard patrol personnel include commissioned, warrant, and petty officers of the U.S. Coast Guard. Designated representatives include federal, state, local and municipal law enforcement agencies.

(c) *Informational broadcasts:* The Captain of the Port, Port Arthur will inform the public when moving security zones have been established around vessels via Broadcast Notices to Mariners and written notice provided by escort vessels.

[USCG–2009–0317, 75 FR 18757, Apr. 13, 2010]

§ 165.806 Sabine Neches Waterway, Texas—regulated navigation area.

(a) The following is a regulated navigation area—The Sabine Neches Waterway which includes the following waters: Sabine Pass Channel, Port Arthur Canal, Sabine Neches Canal, Neches River, Sabine River and all navigable waterways tributary thereto.

(b) Unless otherwise authorized by the Captain of the Port, Port Arthur, Texas, tows on a hawser of 1000 gross tons or greater transiting the Sabine-Neches Waterway are prohibited unless such tows have a tug of sufficient horsepower made up to the tow in such a manner as to insure that complete and effective control is maintained throughout the transit. Inbound vessels only, may shift the tow or pick up an additional tug within 100 yards inside the entrance jetties provided that such action is necessary for reasons of prudent seamanship.

[CGD8–83–09, 49 FR 35500, Sept. 10, 1984]

§ 165.807 Calcasieu River, Louisiana—regulated navigation area.

(a) The following is a regulated navigation area—The Calcasieu River from the Calcasieu jetties up to and including the Port of Lake Charles.

(b) Unless otherwise authorized by the Captain of the Port, Port Arthur, Texas, tows on a hawser of 1000 gross tons or greater transiting the Calcasieu River are prohibited unless such tows have a tug of sufficient horsepower made up to the tow in such a manner as to insure that complete and effective control is maintained at all times. Inbound vessels only, may shift the tow or pick up an additional tug within 100 yards inside the entrance jetties provided that such action is necessary for reasons for prudent seamanship.

[CGD8–83–09, 49 FR 35500, Sept. 10, 1984]

§ 165.808 Corpus Christi Ship Channel, Corpus Christi, TX, safety zone.

(a) The following areas are established as safety zones during specified conditions:

(1) For incoming tank vessels loaded with Liquefied Petroleum Gas, the waters within a 500 yard radius of the LPG carrier while the vessel transits the Corpus Christi Ship Channel to the LPG receiving facility. The safety zone remains in effect until the LPG vessel is moored at the LPG receiving facility.

(2) For outgoing tank vessels loaded with LPG, the waters within a 500 yard radius of the LPG carrier while the vessel departs the LPG facility and transits the Corpus Christi Ship Channel. The safety zone remains in effect until the LPG vessel passes the seaward extremity of the Aransas Pass Jetties.

(b) The general regulations governing safety zones contained in 33 CFR 165.23 apply.

(c) The Captain of the Port will notify the maritime community of periods during which this safety zone will be in effect by providing advance notice of scheduled arrivals and departures of loaded LPG vessels via a Marine Safety Information Broadcast Notice to Mariners.

[CGD 8–84–07, 50 FR 15744, Apr. 22, 1985; 50 FR 19933, May 13, 1985]

§ 165.809 Security Zones; Port of Port Lavaca-Point Comfort, Point Comfort, TX and Port of Corpus Christi Inner Harbor, Corpus Christi, TX.

(a) *Location.* The following area is designated as a security zone: all

waters of the Corpus Christi Inner Harbor from the Inner Harbor Bridge (U.S. Hwy 181) to, and including the Viola Turning Basin.

(b) *Regulations*. (1) No recreational vessels, passenger vessels, or commercial fishing vessels may enter the security zone unless specifically authorized by the Captain of the Port Corpus Christi or a designated representative.

(2) Recreational vessels, passenger vessels and commercial fishing vessels requiring entry into the security zone must contact the Captain of the Port Corpus Christi or a designated representative. The Captain of the Port may be contacted via VHF Channel 16 or via telephone at (361) 888–3162 to seek permission to transit the area. If permission is granted, all persons and vessels must comply with the instructions of the Captain of the Port, Corpus Christi or a designated representative.

(3) Designated representatives include U.S. Coast Guard commissioned, warrant, and petty officers.

(c) *Authority*. In addition to 33 U.S.C. 1231, the authority for this section includes 33 U.S.C. 1226.

[COTP Corpus Christi–02–003, 67 FR 64046, Oct. 17, 2002, as amended by COTP Corpus Christi–04–006, 70 FR 39178, July 7, 2005]

§ 165.810 Mississippi River, LA-regulated navigation area.

(a) *Purpose and applicability*. This section prescribes rules for all vessels operating in the Lower Mississippi River below mile 233.9 above Head of Passes including South Pass and Southwest Pass, to assist in the prevention of allisions; collisions and groundings so as to ensure port safety and protect the navigable waters of the Mississippi River from environmental harm resulting from those incidents, and to enhance the safety of passenger vessels moored or anchored in the Mississippi River.

(b) Lower Mississippi River below mile 233.9 above Head of Passes including South and Southwest Passes:

(1) *Supervision*. The use, administration, and navigation of the waterways to which this paragraph applies shall be under the supervision of the District Commander, Eighth Coast Guard District.

(2) *Speed; high-water precautions*. When passing another vessel (in motion, anchored, or tied up), a wharf or other structure, work under construction, plant engaged in river and harbor improvement, levees withstanding flood waters, building partially or wholly submerged by high water, or any other structure liable to damage by collision, suction or wave action, vessels shall give as much leeway as circumstances permit and reduce their speed sufficiently to preclude causing damages to the vessel or structure being passed. Since this subparagraph pertains directly to the manner in which vessels are operated, masters of vessels shall be held responsible for strict observance and full compliance therewith. During high river stages, floods, or other emergencies, the District Commander may prescribe by navigation bulletins or other means the limiting speed in land miles per hour deemed necessary for the public safety for the entire section or any part of the waterways covered by this paragraph, and such limiting speed shall be strictly observed.

(3) *Towing*. Towing in any formation by a vessel with insufficient power to permit ready maneuverability and safe handling is prohibited.

(c) [Reserved]

(d) Navigation of South and Southwest Passes.

(1) No vessel, except small craft and towboats and tugs without tows, shall enter either South Pass or Southwest Pass from the Gulf until after any descending vessel which has approached within two and one-half (2½) miles of the outer end of the jetties and visible to the ascending vessel shall have passed to sea.

(2) No vessel having a speed of less than ten mph shall enter South Pass from the Gulf when the stage of the Mississippi River exceeds 15 feet on the Carrollton Gage at New Orleans. This paragraph does not apply when Southwest Pass is closed to navigation.

(3) No vessel, except small craft and towboats and tugs without tows, ascending South Pass shall pass Franks Crossing Light until after a descending vessel shall have passed Depot Point Light.

(4) No vessel, except small craft and towboats and tugs without tows, shall enter the channel at the head of South Pass until after an ascending vessel which has reached Franks Crossing Light shall have passed through into the river.

(5) When navigating South Pass during periods of darkness no tow shall consist of more than one towed vessel other than small craft, and during daylight hours no tow shall consist of more than two towed vessels other than small craft. Tows may be in any formation. When towing on a hawser, the hawser shall be as short as practicable to provide full control at all times.

(6) When towing in Southwest Pass during periods of darkness no tow shall consist of more than two towed vessels other than small craft, and during daylight hours no tow shall consist of more than three towed vessels other than small craft.

(e) Watch requirements for anchored and moored passenger vessels.

(1) *Passenger vessels*. Except as provided in paragraph (e)(2) of this section, each passenger vessel with one or more passengers on board, must—

(i) Keep a continuously manned pilothouse; and

(ii) Monitor river activities and marine VHF, emergency and working frequencies of the port, so as to be immediately available to take necessary action to protect the vessel, crew, and passengers if an emergency radio broadcast, danger signal, or visual or other indication of a problem is received or detected.

(2) Each ferryboat, and each small passenger vessel to which 46 CFR 175.110 applies, may monitor river activities using a portable radio from a vantage point other than the pilothouse.

(f) Each self-propelled vessel of 1,600 or more gross tons subject to 33 CFR part 164 shall also comply with the following:

(1) While under way in the RNA, each vessel must have an engineering watch capable of monitoring the propulsion system, communicating with the bridge, and implementing manual-control measures immediately when necessary. The watch must be physically present in the machinery spaces or in the machinery-control spaces and must consist of at least an appropriately licensed or credentialed engineer officer.

(2) Before embarking a pilot when entering or getting under way in the RNA, the master of each vessel shall ensure that the vessel is in compliance with 33 CFR part 164.

(3) The master shall ensure that the chief engineer has certified that the following additional operating conditions will be satisfied so long as the vessel is under way within the RNA:

(i) The main propulsion plant is in all respects ready for operations including the main-propulsion air-start systems, fuel systems, lubricating systems, cooling systems, and automation systems;

(ii) Cooling, lubricating, and fuel-oil systems are at proper operating temperatures;

(iii) Main propulsion machinery is available to immediately respond to the full range of maneuvering commands any load-limiting programs or automatic acceleration-limiting programs that would limit the speed of response to engine orders beyond that needed to prevent immediate damage to the propulsion machinery are capable of being overridden immediately.

(iv) Main-propulsion standby systems are ready to be immediately placed in service.

(g) [Reserved]

NOTE TO § 165.810: Control Light provisions (previously referenced in paragraph (c) of this section) used to manage vessel traffic during periods of high waters in the vicinity of Algiers Point are located in 33 CFR 161.65(c). The special operating requirements (previously referenced in paragraph (g) of this section) used to manage vessel traffic in the vicinity of Eighty-one Mile Point are located in 33 CFR 161.65(e).

(Sec. 104, Pub. L. 92–340, 86 Stat. 424 (33 U.S.C. 1224); sec. 2, Pub. L. 95–474, 92 Stat. 1471 (33 U.S.C. 1223); 49 CFR 1.46(n)(4))

[CGD 75–082, 42 FR 51759, Sept. 29, 1977]

EDITORIAL NOTE: For FEDERAL REGISTER citations affecting § 165.810, see the List of CFR Sections Affected, which appears in the Finding Aids section of the printed volume and at www.fdsys.gov.

§ 165.811 Atchafalaya River, Berwick Bay, LA-regulated navigation area.

(a) The following is a regulated navigation area: the waters of the

Atchafalaya River in Berwick Bay bounded on the northside from 2,000 yards north of the U.S. 90 Highway Bridge and on the southside from 4,000 yards south of the Southern Pacific Railroad (SPRR) Bridge.

(b) Within the regulated navigation area described in paragraph (a) of this section, § 161.40 of this chapter establishes a VTS Special Area for waters within a 1000 yard radius of the SPRR Bridge.

(c) When the Morgan City River gauge reads 3.0 feet or above mean sea level, in addition to the requirements set forth in § 161.13 of this chapter, the requirements of paragraph (d) and (e) of this section apply to a towing vessel which will navigate:

(1) under the lift span of the SPRR Bridge; or

(2) through the navigational opening of the U.S. 90 Highway Bridge: or

(3) through the navigational opening of the Highway 182 Bridge.

(d) *Towing requirements*. (1) Towing on a hawser is not authorized, except that one self-propelled vessel may tow one other vessel without barges upbound;

(2) A towing vessel and barges must be arranged in tandem, except that one vessel may tow one other vessel alongside;

(3) Length of tow must not exceed 1,180 feet; and

(4) Tows with a box end in the lead must not exceed 400 feet in length.

NOTE: The variation in the draft and the beam of the barges in a multi-barge tow should be minimized in order to avoid unnecessary strain on coupling wires.

(e) *Horsepower Requirement*. (1) The following requirements apply to a towing vessel of 3,000 hp or less:

TABLE 165.811(e)—MINIMUM AVAILABLE HORSEPOWER REQUIREMENT

[The greater value listed.]

Direction of tow	Daytime (sunrise to sunset)	Nighttime (sunset to sunrise)
Upbound	400hp or (Length of tow—300ft) × 3.	600hp or (Length of tow—200ft) × 3.
Downbound	600hp or (Length of tow—200ft) × 3.	600hp or (Length of tow) × 3.

NOTE: A 5% variance from the available horsepower is authorized.

(2) All tows carrying cargoes of particular hazard as defined in § 160.203 of this chapter must have available horsepower of at least 600 hp or three times the length of tow, whichever is greater.

(f) *Notice of Requirements*. Notice that these rules are anticipated to be put into effect, or are in effect, will be given by:

(1) Marine information broadcasts;

(2) Notices to mariners;

(3) Vessel Traffic Center advisories or upon vessel information request; and

[CGD 90–020, 59 FR 36334, July 15, 1994, as amended by CGD 95–033, 60 FR 28333, May 31, 1995; CGD08–06–023, 72 FR 27741, May 17, 2007]

§ 165.812 Security Zones; Lower Mississippi River, Southwest Pass Sea Buoy to Mile Marker 96.0, New Orleans, LA.

(a) *Location*. Within the Lower Mississippi River and Southwest Pass, moving security zones are established around all cruise ships between the Southwest Pass Entrance Lighted Buoy ''SW'', at approximate position 28°52′42″ N, 89°25′54″ W [NAD 83] and Lower Mississippi River mile marker 96.0 in New Orleans, Louisiana. These moving security zones encompass all waters within 500 yards of a cruise ship. These zones remain in effect during the entire transit of the vessel and continue while the cruise ship is moored or anchored.

(b) *Regulations*. (1) Entry of persons and vessels into these zones is prohibited unless authorized as follows.

(i) Vessels may enter within 500 yards but not closer than 100 feet of a cruise ship provided they operate at the minimum speed necessary to maintain a safe course.

(ii) No person or vessel may enter within 100 feet of a cruise ship unless expressly authorized by the Coast Guard Captain of the Port New Orleans or his designated representative.

(iii) Moored vessels or vessels anchored in a designated anchorage area are permitted to remain within 100 feet of a cruise ship while it is in transit.

(2) Vessels requiring entry within 500 yards of a cruise ship that cannot slow to the minimum speed necessary to maintain a safe course must request express permission to proceed from the

Captain of the Port New Orleans or his designated representative.

(3) For the purpose of this rule the term ''cruise ship'' is defined as a passenger vessel over 100 gross tons, carrying more than 12 passengers for hire, making a voyage lasting more than 24 hours, any part of which is on the high seas, and for which passengers are embarked or disembarked in the United States or its territories.

(4) The Captain of the Port New Orleans will inform the public of the moving security zones around cruise ships via Marine Safety Information Broadcasts.

(5) To request permission as required by these regulations contact ''New Orleans Traffic'' via VHF Channels 13/67 or via phone at (504) 589–2780 or (504) 589–6261.

(6) All persons and vessels within the moving security zones shall comply with the instructions of the Captain of the Port New Orleans and designated on-scene U.S. Coast Guard patrol personnel. On-scene U.S. Coast Guard patrol personnel include commissioned, warrant, and petty officers of the U.S. Coast Guard.

(c) *Authority*. In addition to 33 U.S.C. 1231, the authority for this section includes 33 U.S.C. 1226.

[COTP New Orleans–02–005, 67 FR 61989, Oct. 3, 2002]

§ 165.813 Security Zones; Ports of Houston and Galveston, TX.

(a) *Location*. Within the Ports of Houston and Galveston, Texas, moving security zones are established encompassing all waters within 500 yards of a cruise ship between Galveston Bay Approach Lighted Buoy ''GB'', at approximate position 29°21′18″ N, 94°37′36″ W [NAD 83] and up to, and including, Barbours Cut. These zones remain in effect during the inbound and outbound entire transit of the cruise ship and continues while the cruise ship is moored or anchored.

(b) *Regulations*. (1) Entry of vessels or persons into these zones is prohibited unless authorized as follows.

(i) Vessels may enter within 500 yards but not closer than 100 yards of a cruise ship provided they operate at the minimum speed necessary to maintain a safe course.

(ii) No person or vessel may enter within 100 yards of a cruise ship unless expressly authorized by the Coast Guard Captain of the Port Houston-Galveston. Where the Houston Ship Channel narrows to 400 feet or less between Houston Ship Channel Entrance Lighted Bell Buoy ''18'', light list no. 34385 at approximately 29°21′06″ N, 94°47′00″ W [NAD 83] and Barbours Cut, the Captain of the Port Houston-Galveston may permit vessels that must transit the navigable channel between these points to enter within 100 yards of a cruise ship.

(iii) Moored vessels or vessels anchored in a designated anchorage area are permitted to remain within 100 yards of a cruise ship while it is in transit.

(2) Vessels requiring entry within 500 yards of a cruise ship that cannot slow to the minimum speed necessary to maintain a safe course must request express permission to proceed from the Captain of the Port Houston-Galveston, or his designated representative.

(3) For the purpose of this section the term ''cruise ship'' is defined as a passenger vessel over 100 gross tons, carrying more than 12 passengers for hire, making a voyage lasting more than 24 hours, any part of which is on the high seas, and for which passengers are embarked or disembarked in the United States or its territories.

(4) The Captain of the Port Houston-Galveston will inform the public of the moving security zones around cruise ships via Marine Safety Information Broadcasts.

(5) To request permission as required by these regulations contact ''Houston Traffic'' via VHF Channels 11/12 or via phone at (713) 671–5103.

(6) All persons and vessels within the moving security zone shall comply with the instructions of the Captain of the Port Houston-Galveston and designated on-scene U.S. Coast Guard patrol personnel. On-scene U.S. Coast Guard patrol personnel include commissioned, warrant, and petty officers of the U.S. Coast Guard.

(c) *Authority*. In addition to 33 U.S.C. 1231, the authority for this section includes 33 U.S.C. 1226.

[COTP Houston-Galveston–02–010, 67 FR 64048, Oct. 17, 2002]

§ 165.814 Security Zones; Captain of the Port Houston-Galveston Zone.

(a) *Location*. The following areas are designated as security zones:

(1) *Houston, Texas*. The Houston Ship Channel and all associated turning basins, bounded by a line drawn between Houston Ship Channel Light 132 (LLNR–24445) and Houston Ship Channel Light 133 (LLNR–24450) west to the T & N Rail Road Swing Bridge at the entrance to Buffalo Bayou, including all waters adjacent to the ship channel from shoreline to shoreline and the first 200 yards of connecting waterways.

(2) *Morgan's Point, Texas*. The Barbours Cut Ship Channel and Turning Basin containing all waters west of a line drawn between Junction Light ''Barbours Cut'' 29°41′12″ N, 94°59′12″ W (LLNR–23525), and Houston Ship Channel Light 91, 29°41′00″ N, 94°59′00″ W (LLNR–23375) (NAD 1983).

(3) *Bayport, TX*. The Port of Bayport, Bayport Ship Channel and Bayport Turning Basin containing all waters south of latitude 28°36′45″ N and west of Bayport Ship Channel Light 9 (LLNR–23295) (NAD 1983).

(4) *Texas City, Texas*. The Port of Texas City Channel, Turning Basin and Industrial Canal containing all waters bounded by the area south and west of a line drawn from Texas City Channel Light 19 (LLNR 24810) through Cut B Inner Range Front Light (LLNR 24765) and terminating on land in position 29°23′16″ N, 94°53′15″ W (NAD 1983).

(5) *Freeport, Texas*. (i) The Dow Barge Canal, containing all waters of the Dow Barge Canal north of a line drawn between 28°56.81′ N/095°18.33′ W and 28°56.63′ N/095°18.54′ W (NAD 1983).

(ii) The Brazos Harbor, containing all waters west of a line drawn between 28°56.45′ N, 095°20.00′ W, and 28°56.15′ N, 095°20.00′ W (NAD 1983) at its junction with the Old Brazos River.

(iii) The Dow Chemical plant, containing all waters of the Brazos Point Turning Basin within 100′ of the north shore and bounded on the east by the longitude line drawn through 28°56.58′ N/095°18.64′ W and on the west by the longitude line drawn through 28°56.64′ N/095°19.13′ W (NAD 1983).

(iv) The Seaway Teppco Facility, containing all waters of the Brazos Port Turning Basin bounded on the south by the shore, the north by the Federal Channel, on the east by the longitude line running through 28°56.44′ N, 095°18.83′ W and 28°56.48′ N 095°18.83′ W and on the West by the longitude line running through 28°56.12′ N, 095°19.27′ W and 28°56.11′ N, 095°19.34′ W (NAD 1983).

(v) The Conoco Phillips Facility docks, containing all waters within 100′ of a line drawn from a point on shore at Latitude 28°55.96′ N, Longitude 095°19.77′ W, extending west to a point on shore at Latitude 28°56.19′ N, Longitude 095°20.07′ W (NAD 1983).

(vi) The Freeport LNG Basin containing all waters shoreward of a line drawn between the eastern point at latitude 28°56′25″ N, 095°18′13″ W, and the western point at 28°56′28″ N, 095°18′31″ W, east towards the jetties.

(b) *Regulations*. (1) Entry of into these zones is prohibited except for the following:

(i) Commercial vessels operating at waterfront facilities within these zones;

(ii) Commercial vessels transiting directly to or from waterfront facilities within these zones;

(iii) Vessels providing direct operational/logistic support to commercial vessels within these zones;

(iv) Vessels operated by the appropriate port authority or by facilities located within these zones; and

(v) Vessels operated by federal, state, county, or municipal agencies.

(2) Other persons or vessels requiring entry into a zone described in this section must request express permission to enter from the Captain of the Port Houston-Galveston, or designated representative. The Captain of the Port Houston-Galveston's designated representatives are any personnel granted authority by the Captain of the Port Houston-Galveston to receive, evaluate, and issue written security zone entry permits, or the designated on-scene U.S. Coast Guard patrol personnel described in paragraph (b)(4).

(3) To request permission as required by these regulations contact ''Houston Traffic'' via VHF Channels 11/12 or by phone at (713) 671–5103.

(4) All persons and vessels shall comply with the instructions of the Captain of the Port Houston-Galveston and designated on-scene U.S. Coast Guard patrol personnel. On-scene U.S. Coast Guard patrol personnel include commissioned, warrant, and petty officers of the U.S. Coast Guard.

[COTP Houston-Galveston–02–009, 67 FR 23593, May 5, 2003, as amended by USCG–2009–0501, 75 FR 8493, Feb. 25, 2010; USCG–2008–0124, 75 FR 11002, Mar. 10, 2010]

§ 165.815 Ohio River at Louisville, KY; regulated navigation area.

(a) The following is a regulated navigation area: The waters of the Ohio River from the Clark Memorial (Highway) Bridge at Mile 603.5, downstream to McAlpine Dam at Mile 604.4.

(b) The general regulations governing regulated navigation area contained in 33 CFR part 165, subpart B apply.

(c) No pleasure or fishing craft shall be operated within the regulated navigation area at any time without prior permission of the Captain of the Port, Louisville, Kentucky, except in case of emergency and except for passage through McAlpine Lock.

[CGD 2–89–04, 55 FR 23203, June 7, 1990. Redesignated by CGD 96–026, 61 FR 33669, June 28, 1996]

§ 165.817 Arkansas River, Mile 118.2 to 125.4, Little Rock Arkansas—regulated navigation area.

(a) Location. The following is a regulated navigation area (RNA): The waters of the Arkansas River between mile 118.2 and mile 125.4.

(b) Regulations. Transit of the RNA is limited during periods of high velocity flow, defined as the flow rate of 70,000 cubic feet per second or more at the Murray Lock and Dam at mile 125.4. The flow rate at this location is calculated by the U.S. Army Corps of Engineers on a regular and routine basis. This information will be distributed by announcements by Coast Guard Marine Information Broadcasts, publication in Coast Guard Local Notice to Mariners, and telephone or radio contact with the Lockmaster at Murray Lock and Dam.

(c) Transit of the RNA during periods of high velocity flow may only occur under the following conditions:

(1) Vessels may not meet or pass in the RNA.

(2) No vessel shall anchor, stop, remain or drift without power at any time in the RNA.

(3) All vessels shall continually monitor VHF-FM channel 13 on their radiotelephone while in or approaching the RNA.

(4) Prior to entering the RNA, downbound vessels shall make a broadcast in the blind on VHF-FM channel 13 announcing their estimated time of departure from Murray Lock and Dam or from the mooring cells at mile 121.5 to ensure there are no upbound vessels within the RNA. If there is upbound traffic within the RNA, the downbound vessel shall not depart until the upbound vessel has passed through the RNA. After departing, vessels will proceed through the RNA, including all drawbridges located therein, without delay.

(5) When upbound vessels reach mile 116, they shall make a broadcast in the blind on VHF-FM channel 13 announcing their estimated arrival time at the Rock Island Railroad Bridge at mile 118.2.

(6) When a downbound vessel is already in the RNA, an upbound vessel shall adjust its speed so as to avoid a meeting situation in the RNA.

(d) Refer to 33 CFR 117.123 for drawbridge operation regulations.

[CGD2–90–04, 57 FR 22176, May 27, 1992. Redesignated by CGD 96–026, 61 FR 33669, June 28, 1996]

§ 165.818 Moving Security Zones, for certain vessels in Freeport Entrance Channel, Freeport, Texas.

(a) *Location*. The following areas are security zones: All waters within the Captain of the Port Houston-Galveston Zone commencing at U.S. territorial waters through the Freeport Entrance Channel, from surface to bottom, one thousand (1000) yards ahead and astern and five hundred (500) yards on each side of any vessel that has a moving security zone established around it.

(b) *Regulations*. Entry into or remaining in the zones described in paragraph (a) of this section is prohibited unless authorized as follows:

(1) Moored vessels or vessels anchored in a designated anchorage area are permitted to remain moored or anchored if they come within a security zone described in paragraph (a) of this section. A moored or an anchored vessel in a security zone must remain moored or anchored unless it obtains permission from the Captain of the Port to do otherwise.

(2) Commercial vessels operating at the waterfront facilities within these zones.

(3) Commercial vessel transiting directly to or from waterfront facilities within these zones.

(4) Vessels providing direct operational/logistic support to commercial vessels within these zones.

(5) Vessels operated by the port authority or by facilities located within these zones.

(6) Vessels operated by Federal, State, county, or municipal agencies.

(7) All persons and vessels within the moving security zone must comply with the instructions of the Captain of the Port Houston-Galveston and designated on-scene U.S. Coast Guard patrol personnel. On-scene U.S. Coast Guard patrol personnel include commissioned, warrant, and petty officers of the U.S. Coast Guard.

(8) To request permission as required by these regulations, contact the Sector Houston-Galveston Command Center by telephone at (713) 671–5113. In Freeport, vessels should contact the Captain of the Port's designated on-scene representative for the moving security zone on VHF Channel 16, or by telephone at (979) 233–7551.

(c) *Certain vessel definition*. For the purposes of this section, certain vessel means any vessel within the 12 nautical mile U.S. Territorial Waters and bound for the Port of Freeport that is deemed to be in need of a moving security zone by the Captain of the Port, Houston-Galveston for security reasons. In making this determination, the Captain of the Port considers all relevant security factors, including but not limited to the presence of unusually harmful or hazardous substances and the risk to population or infrastructure.

(d) *Informational broadcasts*. The Captain of the Port Houston-Galveston will inform the public when moving security zones have been established around certain vessels via Broadcast Notice to Mariners on VHF channel 16 and 13. Vessels that have a moving security zone in place around them will display the international signal flag or pennant number five.

(e) *Authority*. In addition to 33 U.S.C. 1231 and 50 U.S.C. 191, the authority for this section includes 33 U.S.C. 1226.

[USCG–2008–0125, 75 FR 8490, Feb. 25, 2010]

§ 165.819 Security Zone; Sabine Bank Channel, Sabine Pass Channel and Sabine-Neches Waterway, TX.

(a) *Location*. (1) The following LNG facility mooring basins are designated as fixed security zones whenever LNG carriers are moored within them:

(i) *Golden Pass LNG, Sabine TX:* All mooring basin waters south of a line connecting the following points—beginning at 29°45′58″ N, 093°55′40″ W; then east to a point at 29°45′52.8″ N, 093°55′20.8″ W; then bearing 120° T to the shoreline at 29°45′50″ N, 093°55′17″ W.

(ii) *Sabine Pass LNG, Cameron Parish, LA:* All mooring basin waters north of a line connecting the following points—beginning at the shoreline in position 29°44′34.7″ N, 093°52′29″ W; then southeast to a point at 29°44′31.4″ N, 093°52′26.4″ W; then bearing 121° T to a point at 29°44′25.2″ N, 093°52′14.6″ W; then bearing 116° T to the shoreline at 29°44′23.75 N, 093°52′00″ W.

(2) The following areas are designated as moving security zones: All waters of the Captain of the Port, Port Arthur Zone commencing at U.S. territorial waters and extending from the surface to the bottom, channel edge to channel edge on the Sabine Bank and Sabine Pass Channels and shoreline to shoreline on the Sabine-Neches Waterway, 2 miles ahead and 1 mile astern of certain designated vessels while in transit within in the Captain of the Port, Port Arthur zone. Mariners would be notified of designated vessels by Broadcast Notice to Mariners and the presence of escort vessels displaying flashing blue law enforcement lights.

(b) *Regulations.* (1) Entry into or remaining in a fixed security zone described in paragraph (a)(1) of this section is prohibited for all vessels except:

(i) Commercial vessels operating at waterfront facilities within these zones;

(ii) Commercial vessels transiting directly to or from waterfront facilities within these zones;

(iii) Vessels providing direct operational or logistical support to commercial vessels within these zones;

(iv) Vessels operated by the appropriate port authority or by facilities located within these zones; and

(v) Vessels operated by Federal, State, county, or municipal law enforcement agencies.

(2) Entry into or remaining in a moving security zone described in paragraph (a)(2) of this section is prohibited for all vessels except:

(i) Moored vessels or vessels anchored in a designated anchorage area. A moored or an anchored vessel in a security zone described in paragraph (a)(2) of this section must remain moored or anchored unless it obtains permission from the Captain of the Port to do otherwise;

(ii) Commercial vessels operating at waterfront facilities located within the zone;

(iii) Vessels providing direct operational support to commercial vessels within a moving security zone;

(iv) Vessels operated by Federal, State, county, or municipal law enforcement agencies.

(3) Meeting, crossing or overtaking situations are not permitted within the security zone described in paragraph (a)(2) of this section unless specifically authorized by the Captain of the Port.

(4) Other persons or vessels requiring entry into security zones described in this section must request permission from the Captain of the Port, Port Arthur or designated representative.

(5) To request permission to enter a security zone described in this section, contact Vessel Traffic Service Port Arthur on VHF Channel 01A or 65A; by telephone at (409) 719–5070; by fax at (409) 719–5090; or contact the Captain of the Port's designated on-scene patrol vessel on VHF channel 13 or 16.

(6) All persons and vessels within a security zone described in this section must comply with the instructions of the Captain of the Port, Port Arthur, designated on-scene U.S. Coast Guard patrol personnel or other designated representatives. Designated on-scene U.S. Coast Guard patrol personnel include commissioned, warrant, and petty officers of the U.S. Coast Guard. Designated representatives include Federal, State, local and municipal law enforcement agencies.

[USCG–2009–0316, 75 FR 65235, Oct. 22, 2010, as amended at 76 FR 1521, Jan. 11, 2011]

§ 165.820 Security Zone; Ohio River Mile, 34.6 to 35.1, Shippingport, Pennsylvania.

(a) *Location.* The following area is a security zone: The waters of the Ohio River, extending 200 feet from the shoreline of the left descending bank beginning from mile marker 34.6 and ending at mile marker 35.1.

(b) *Regulations.* (1) Entry into or remaining in this zone is prohibited unless authorized by the Coast Guard Captain of the Port, Pittsburgh.

(2) Persons and vessels desiring to transit the area of the security zone may contact the Captain of the Port Pittsburgh at telephone number 412–644–5808 or on VHF channel 16 to seek permission to transit the area. If permission is granted, all persons and vessels must comply with the instructions of the Captain of the Port Pittsburgh or his designated representative.

(c) *Authority.* In addition to 33 U.S.C. 1231, the authority for this section includes 33 U.S.C. 1226.

[COTP Pittsburgh–02–005, 67 FR 40163, June 12, 2002]

§ 165.821 Ohio River at Cincinnati, OH; regulated navigation area.

(a) *Location.* The following is a regulated navigation area (RNA)—The waters of the Ohio River between mile 466.0 and mile 473.0.

(b) *Activation.* The restrictions in paragraphs (c) (1) through (4) are in effect from one-half hour before sunset to one-half hour after sunrise when the Cincinnati, Ohio, Ohio River Gauge is at or above the 45 foot level. The Captain of the Port, Louisville, Kentucky

will publish a notice in the Local Notice to Mariners and will make announcements by Coast Guard Marine Information Broadcasts whenever the river level measured at the gauge activates or terminates the navigation restrictions in this section.

(c) *Regulations.* (1) Transit through the RNA by all downbound vessels towing cargoes regulated by Title 46 Code of Federal Regulations Subchapters D and O with a tow length exceeding 600 feet excluding the tow boat is prohibited.

(2) No vessel shall loiter, anchor, stop, remain or drift without power at any time within the navigation channel of the RNA.

(3) All commercial vessels shall continually monitor VHF-FM channel 13 on their radiotelephone while in or approaching the RNA.

(4) Between Ohio River miles 464.0 and 466.0, downbound vessels shall make a broadcast in the blind, on VHF-FM channel 13 announcing their estimated time of entering the RNA.

[CGD02–95–003, 61 FR 2417, Jan. 26, 1996. Redesignated by CGD 97–023, 62 FR 33365, June 19, 1997, as amended by USCG–1998–3799, 63 FR 35533, June 30, 1998]

§ 165.822 Safety Zone; Fireworks Display, Kanawha River, WV.

(a) *Safety zones.* The following areas are designated safety zones: all waters between the specified mile markers on the Kanawha River, described as follows in the Table to § 165.822(a):

TABLE TO § 165.822(a)

Event name	Event location	Scheduled date
West Virginia Special Olympics Fireworks Display.	Between mile 57.9 and 58.9, Charlestown, WV.	First Friday in June.
West Virginia Symphony Sunday Fireworks Display.	Between mile 59.5 and 60.5, Charlestown, WV.	First Sunday in June.
St. Albans Fireworks Display	Between mile 46.0 and 47.0, St. Albans, WV.	Last Saturday in June.

(b) *Enforcement.* The Captain of the Port Ohio Valley or designated representative will inform the public through broadcast notice to mariners of the enforcement periods for the safety zones.

(c) *Regulations.* (1) In accordance with the general regulations in § 165.23 of this part, entry into this zone is prohibited unless authorized by the Captain of the Port Ohio Valley or designated representative.

(2) Persons or vessels requiring entry into or passage through this zone must request permission from the Captain of the Port Ohio Valley, or a designated representative. They may be contacted on VHF–FM Channels 13 or 16, or by telephone at (800) 253–7465.

(3) All persons and vessels shall comply with the instructions of the Captain of the Port Ohio Valley and designated on-scene U.S. Coast Guard patrol personnel.

(4) On-scene U.S. Coast Guard patrol personnel include commissioned, warrant, and petty officers of the U.S. Coast Guard.

[USCG–2010–1015, 76 FR 28314, May 17, 2011]

§ 165.825 Security Zones; Captain of the Port St. Louis, Missouri.

(a) *Location.* The following areas are security zones:

(1) *Fort Calhoun Nuclear Power Station Security Zone, Fort Calhoun, Nebraska*—all waters of the Missouri River, extending 75 feet from the shoreline of the right descending bank beginning from mile marker 645.6 and ending at mile marker 646.0.

(2) *Cooper Nuclear Station Security Zone, Brownville, Nebraska*—all waters of the Missouri River, extending 250 feet from the shoreline of the right descending bank beginning from mile marker 532.5 and ending at mile marker 532.9.

(3) *Quad Cities Generating Station Security Zone, Cordova, Illinois*—all waters of the Upper Mississippi River, extending 300 feet from the shoreline of the left descending bank beginning from

mile marker 506.3 and ending at mile marker 507.3.

(4) *Prairie Island Nuclear Generating Facility Security Zone, Welch, Minnesota*—all waters of the Upper Mississippi River, extending 300 feet from the shoreline of the right descending bank beginning from mile marker 798.0 and ending at 798.3.

(5) *Clinton Power Station Security Zone, Clinton, Illinois*—all waters of Lake Clinton in Dewitt County in East Central Illinois bounded by a dam constructed near the confluence of Salt Creek River mile 56 and the north fork of Salt Creek. The zone extends out 600 feet from shore. Boundaries of the zone begin at 40°10′30″ N, 88°50′30″ W; thence east to 40°10′30″ N, 88°49′55″ W; thence south to 40°10′15″ N, 88°49′55″ W; thence west to 40°10′15″ N, 88°50′30″ W; thence returning north to the origin. These coordinates are based upon [NAD 83].

(b) *Regulations*. (1) Entry into these security zones is prohibited unless authorized by the Coast Guard Captain of the Port, St. Louis or designated representative.

(2) The Ft. Calhoun and Cooper security zones include a portion of the navigable channel of the Missouri River. All vessels that may safely navigate outside of the channel are prohibited from entering the security zone without the express permission of the Captain of the Port St. Louis or designated representative. Vessels that are required to use the channel for safe navigation are authorized entry into the zone but must remain within the channel unless expressly authorized by the Captain of the Port St. Louis or designated representative.

(3) Persons or vessels requiring the Captain of the Port St. Louis' permission to enter the security zones must contact the Coast Guard Sector Upper Mississippi River at telephone number 319 524–7511 or on VHF marine channel 16 or Marine Safety Detachment Quad Cities at telephone number 309 782–0627 or the Captain of the Port, St. Louis at telephone number 314 539–3091, ext. 3500 in order to seek permission to enter the security zones. If permission is granted, all persons and vessels must comply with the instructions of the Captain of the Port, St. Louis or designated representative.

(4) Designated representatives are commissioned, warrant, and petty officers of the U.S. Coast Guard.

(c) *Authority*. In addition to 33 U.S.C. 1231, the authority for this section includes 33 U.S.C. 1226.

[COTP St. Louis–02–005, 67 FR 64043, Oct. 17, 2002]

§ 165.827 Regulated Navigation Area; Galveston Channel, TX.

(a) *Location*. The following area is a regulated navigation area: All waters of the Galveston Channel within the area from Latitude 29°20′19″ N, Longitude 094°46′36″ W, east to Latitude 29°20′06″ N, Longitude 094°46′15″ W, south to Latitude 29°19′47″ N, Longitude 094°46′27″ W, west to Latitude 29°19′51″ N, Longitude 094°46′45″ W, and north to Latitude 29°20′19″ N, Longitude 094°46′36″ W.

(b) *Regulations*. (1) Vessels navigating this area must do so at a minimum safe speed so as to not cause any wake.

(2) Vessels may proceed at greater than a minimum safe speed with permission of the Captain of the Port Houston-Galveston or a designated representative.

(3) To request permission as required by these regulations, contact the Sector Houston-Galveston Command Center by telephone at (713)671–5113.

[USCG–2009–0931, 75 FR 47715, Aug. 9, 2010]

§ 165.830 Regulated Navigation Area; Reporting Requirements for Barges Loaded with Certain Dangerous Cargoes, Inland Rivers, Eighth Coast Guard District.

(a) *Regulated Navigation Area*. The following waters are a regulated navigation area (RNA): the Mississippi River above mile 235.0, Above Head of Passes, including all its tributaries; the Atchafalaya River above mile 55.0, including the Red River; the Ohio River and all its tributaries; and the Tennessee River from its confluence with the Ohio River to mile zero on the Mobile River and all other tributaries between these two rivers.

(b) *Applicability*. This section applies to towing vessel operators and fleeting area managers responsible for CDC barges in the RNA. This section does not apply to:

(1) Towing vessel operators responsible for barges not carrying CDCs barges, or

(2) Fleet tow boats moving one or more CDC barges within a fleeting area.

(c) *Definitions*. As used in this section—

Barge means a non-self propelled vessel engaged in commerce, as set out in 33 CFR 160.204.

Certain Dangerous Cargo or (*CDC*) includes any of the following:

(1) Division 1.1 or 1.2 explosives as defined in 49 CFR 173.50.

(2) Division 1.5D blasting agents for which a permit is required under 49 CFR 176.415 or, for which a permit is required as a condition of a Research and Special Programs Administration exemption.

(3) Division 2.3 ''poisonous gas'', as listed in 49 CFR 172.101 that is also a ''material poisonous by inhalation'' as defined in 49 CFR 171.8, and that is in a quantity in excess of 1 metric ton per barge.

(4) Division 5.1 oxidizing materials for which a permit is required under 49 CFR 176.415 or, for which a permit is required as a condition of a Research and Special Programs Administration exemption.

(5) A liquid material that has a primary or subsidiary classification of Division 6.1 ''poisonous material'' as listed in 49 CFR 172.101 that is also a ''material poisonous by inhalation'', as defined in 49 CFR 171.8 and that is in a bulk packaging, or that is in a quantity in excess of 20 metric tons per barge when not in a bulk packaging.

(6) Class 7, ''highway route controlled quantity'' radioactive material or ''fissile material, controlled shipment'', as defined in 49 CFR 173.403.

(7) Bulk liquefied chlorine gas and bulk liquefied gas cargo that is flammable and/or toxic and carried under 46 CFR 154.7.

(8) The following bulk liquids—

(i) Acetone cyanohydrin,

(ii) Allyl alcohol,

(iii) Chlorosulfonic acid,

(iv) Crotonaldehyde,

(v) Ethylene chlorohydrin,

(vi) Ethylene dibromide,

(vii) Methacrylonitrile,

(viii) Oleum (fuming sulfuric acid), and

(ix) Propylene oxide.

CDC barge means a barge containing CDCs or CDC residue.

Downbound means the tow is traveling with the current.

Eighth Coast Guard District means the Coast Guard District as set out in 33 CFR 3.40–1.

Fleeting area means any fleet, including any facility, located within the area covered by one single port.

Fleet tow boat means any size vessel that is used to move, transport, or deliver a CDC barge within a fleeting area.

Inland River Vessel Movement Center or (*IRVMC*) means the Coast Guard office that is responsible for collecting the information required by this section.

Towing vessel means any size vessel that is used to move, transport, or deliver a CDC barge to a fleet or facility that is located in a different port than where the voyage originated.

Towing vessel operator means the Captain or pilot who is on watch on board a towing vessel.

Upbound means the tow is traveling against the current.

(d) *Regulations*. The following must report to the Inland River Vessel Movement Center (IRVMC):

(1) The towing vessel operator responsible for one or more CDC barges in the RNA must report all the information items specified in table 165.830(f), in paragraph (f) of this section, to the IRVMC:

(i) Upon point of entry into the RNA with one or more CDC barges;

(ii) Four hours before originating a voyage within the RNA with one or more CDC barges, except if the evolution of making up a tow with a CDC barge will take less than four hours before originating a voyage, and the towing vessel operator did not receive the order to make up a tow with a CDC barge in advance of four hours before originating the voyage with one or more CDC barges, in which case the towing vessel operator shall submit the required report to the IRVMC as soon as possible after receiving orders to make up a tow with one or more CDC barges;

(iii) Upon dropping off one or more CDC barges at a fleeting area or facility;

(iv) Upon picking up one or more additional CDC barges from a fleeting area or facility;

(v) At designated reporting points, set forth in paragraph (e) of this section;

(vi) When the estimated time of arrival (ETA) to a reporting point varies by 6 hours from the previously reported ETA;

(vii) Any significant deviation from previously reported information;

(viii) Upon departing the RNA with one or more CDC barges; and

(ix) When directed by the IRVMC.

(2) The fleeting area manager responsible for one or more CDC barges in the RNA must report all the information items specified in table 165.830(g), in paragraph (g) of this section, to the IRVMC:

(i) Once daily, report all CDC barges within the fleeting area;

(ii) Upon moving one or more CDC barges within a fleeting area by a fleet tow boat;

(iii) Any significant deviation from previously reported information; and

(iv) When directed by the IRVMC.

(3) Reports required by this section may be made by a company representative or dispatcher on behalf of the fleeting area manager.

(4) Reports required by this section must be made to the IRVMC either by telephone to (866) 442–6089, by fax to (866) 442–6107, or by e-mail to *irvmc@cgstl.uscg.mil*. A reporting form and e-mail link are available at *http://www.uscg.mil/d8/Divs/M/IRVMC.htm*.

(5) The general regulations contained in 33 CFR 165.13 apply to this section.

(e) *Eighth Coast Guard District Inland River RNA Reporting points*. Towing vessel operators responsible for one or more CDC barges in the RNA must make reports to the IRVMC at each point listed in this paragraph (e):

(1) Lower Mississippi River (LMR), between Mile Markers (M):
(i) M 235.0–240.0 (Entering & Exiting RNA)
(ii) M 338.0–343.0
(iii) M 430.0–435.0
(iv) M 520.0–525.0
(v) M 621.0–626.0
(vi) M 695.0–700.0
(vii) M 772.0–777.0
(viii) M 859.0–864.0
(ix) M 945.0–950.0

(2) Upper Mississippi River (UMR), between Mile Markers (M) and Departing Lock & Dam (L&D), unless otherwise indicated:
(i) L&D 3
(ii) L&D 4
(iii) L&D 8
(iv) L&D 11
(v) L&D 14
(vi) L&D 18
(vii) L&D 21
(viii) L&D 25
(ix) Arriving Melvin Price L&D (downbound)
(x) Departing Melvin Price L&D (upbound)
(xi) M 150.0–145.0
(xii) M 66.0–61.0

(3) Missouri River (MOR), between Mile Markers (M):
(i) M 54.0–56.0
(ii) M 115.0–117.0
(iii) M 208.0–210.0
(iv) M 326.0–328.0
(v) M 397.0–399.0
(vi) M 487.0–489.0
(vii) M 572.0–574.0
(viii) M 652.0–654.0
(ix) M 745.0–750.0

(4) Illinois River (ILR), at Mile Marker (M) and Lock & Dam (L&D), as indicated:
(i) M 0.0
(ii) Departing New LaGrange L&D
(iii) M 140.0
(iv) M 187.2 (Entering & Exiting RNA)

(5) Ohio River, between Mile Markers (M) and at Lock & Dam (L&D), as indicated:
(i) M 950.0–952.0
(ii) Arriving Smithland L&D
(iii) M 826.0–828.0
(iv) M 748.0–750.0
(v) M 673.0–675.0
(vi) M 628.0–630.0
(vii) M 556.0–559.0
(viii) M 511.0–513.0
(ix) Departing Capt Anthony Meldahl L&D
(x) Arriving Greenup L&D (upbound)
(xi) Departing Greenup L&D (downbound)
(xii) Departing Robert C. Byrd L&D (upbound)
(xiii) Arriving Robert C. Bryd L&D (downbound)
(xiv) Departing Belleville L&D
(xv) Departing Hannibal L&D
(xvi) Departing Montgomery L&D

(6) Allegheny River at Lock & Dam (L&D), as indicated:
(i) Departing L&D 4 (upbound)
(ii) Arriving L&D 4 (downbound)

(7) Monongahela River Departing Lock & Dam (L&D):
(i) Grays Landing L&D
(ii) L&D 3

(8) Kanawha River, at Lock & Dam (L&D), as indicated:
(i) Arriving Winfield L&D (upbound)
(ii) Departing Winfield L&D (downbound)

(9) Cumberland River, between Mile Markers (M) and Departing Lock & Dam (L&D), unless otherwise indicated:
(i) Departing Old Hickory L&D (upbound)
(ii) Arriving Old Hickory L&D (downbound)
(iii) M 127.0–129.0
(iv) Barkley L&D
(10) Tennessee River, between Mile Markers (M) and when Departing Lock & Dam (L&D), unless otherwise indicated:
(i) Fort Loudon L&D
(ii) Watts Bar L&D
(iii) Departing Chickamauga L&D (upbound)
(iv) Arriving Chickamauga L&D (downbound)
(v) Nickajack L&D
(vi) Gunterville L&D
(vii) General Joe Wheeler L&D
(viii) Pickwick Landing L&D
(ix) M 122.0–124.0
(x) Kentucky L&D
(11) Tennessee-Tombigbee River, between Mile Markers (M) and when Departing Lock & Dam (L&D):
(i) Lock D
(ii) Aberdeen L&D
(iii) Aliceville L&D
(iv) M 202.0–203.0
(v) Coffeeville L&D
(12) Mobile River, at Mile Marker (M):
(i) 0.0 (Entering & Exiting RNA)
(ii) [Reserved]
(13) Black Warrior River, when Departing L&D:
(i) Holt L&D
(ii) [Reserved]
(14) Alabama River, when Departing L&D:
(i) Claiborne L&D
(ii) Henry L&D
(15) McClellan-Kerr Arkansas River Navigation System, when Departing Lock & Dam (L&D), unless otherwise indicated:
(i) Chouteau L&D
(ii) W.D. Mayo L&D
(iii) Ozark-Jeta Taylor L&D
(iv) L&D 9
(v) Arriving David D. Terry L&D (upbound)
(vi) Departing David D. Terry L&D (downbound)
(vii) L&D 2
(16) Red River, between Mile Markers (M) and when Departing Lock & Dam (L&D):
(i) L.C. Boggs L&D
(ii) Lock 3
(iii) M 178.0–180.0
(17) Atchafalaya River, at Mile Marker (M):
(i) 55.0 (Entering & Exiting RNA)
(ii) [Reserved]

(f) *Information to be reported to the IRVMC by towing vessel operators.* With the exception noted in paragraph (d)(1)(ii) of this section, towing vessel operators responsible for one or more CDC barges in the RNA must report all the information required by this section as set out in table 165.830(f) of this paragraph.

TABLE 165.830(f)—INFORMATION TO BE REPORTED TO THE IRVMC BY TOWING VESSEL OPERATORS

	24-hour contact number	Name of vessel moving barge(s)	Barge(s) name and official number	Type, name and amount of CDC onboard	Estimated time of departure from fleeting area or facility	Name and location of destination of CDC barge (fleeting area or facility), including estimated time of arrival	Reporting point	Estimated time of arrival (ETA) to next reporting point (If applicable)
(1) Upon point of entry into the RNA with a CDC barge	X	X	X	X	.....	X	X	X
(2) 4 hours before to originating a voyage within the RNA with one or more CDC barges; but see exception in paragraph (d)(1)(ii) of this section	X	X	X	X	X	X	.....	X
(3) Upon dropping off one or more CDC barges at a fleeting area or facility	.....	X	X	.....	.....	.....	.....	.....
(4) Upon picking up one or more additional CDC barges from a fleeting area or facility	.....	X	X	X	.....	.....	.....	.....
(5) At designated reporting points in table 165.830(e)	.....	X	X	(1)	.....	(1)	X	X
(6) When ETA to a reporting point varies by 6 hours from previously reported ETA	.....	X	(1)	(1)	.....	.....	.....	X
(7) Any significant deviation from previously reported information (all that apply)	X	X	X	X	X	X	X	X
(8) Upon departing the RNA with a CDC barge(s)	.....	X	X	.....	.....	.....	X	.....
(9) When directed by the IRVMC	X	X	X	X	X	X	X	X

[1] If changed.

(g) *Information to be reported to the IRVMC by fleeting area managers.* Fleeting area managers responsible for one or more CDC barges in the RNA must report the information required by this section as set out in table 165.830(g) of this paragraph.

TABLE 165.830(g)—INFORMATION TO BE REPORTED TO THE IRVMC BY FLEETING AREA MANAGERS

	24-hour contact number	Barge(s) name and official number	Type, name and amount of CDC onboard	Location of CDC barge (fleeting area or facility)
(1) Once daily, all CDC barges in a fleeting area	X	X	X	X
(2) Upon moving one or more CDC barges within a fleeting area by a fleet tow boat	.....	X	X	X
(3) Any significant deviation from previously reported information (all that apply)	X	X	X	X
(4) When directed by the IRVMC	X	X	X	X

(h) *Alternative reporting.* The Eighth Coast Guard District Commander may consider and approve alternative methods to be used by a reporting party to meet any reporting requirements if—

(1) the request is submitted in writing to Commander, Eighth Coast Guard District (m), Hale Boggs Federal Bldg., 501 Magazine Street, New Orleans, LA 70130; and

(2) the alternative provides an equivalent level of the reporting that which would be achieved by the Coast Guard with the required check-in points.

(i) Deviation from this section is prohibited unless specifically authorized by the Commander, Eighth Coast Guard District or the IRVMC.

(Approved by the Office of Management and Budget under OMB control number 1625–0105)

[CDG08–03–029, 68 FR 57363, Oct. 3, 2003; 68 FR 63988, Nov. 12, 2003, as amended at 68 FR 69959, Dec. 16, 2003]

§ 165.835 Security Zone; Port of Mobile, Mobile Ship Channel, Mobile, AL.

(a) *Definition.* As used in this section—

Cruise ship means a passenger vessel over 100 gross tons, carrying more than 12 passengers for hire, making a voyage lasting more than 24 hours any part of which is on the high seas, and for which passengers are embarked or disembarked in the United States or its territories. This definition covers passenger vessels that must comply with 33 CFR parts 120 and 128.

(b) *Location.* The following areas are security zones: all waters of the Port of Mobile and Mobile Ship Channel—

(1) Within 100 yards of a cruise ship that is transiting shoreward of the Mobile Sea Buoy (located in approximate position 28°07′50″ N, 88°04′12″ W; NAD 83), and

(2) Within 25 yards of a cruise ship that is moored shoreward of the Mobile Sea Buoy.

(c) *Periods of enforcement.* This rule will only be enforced when a cruise ship is transiting the Mobile Ship Channel shoreward of the Mobile Sea Buoy, while transiting in the Port of Mobile, or while moored in the Port of Mobile. The Captain of the Port Mobile or a designated representative would inform the public through broadcast notice to mariners of the enforcement periods for the security zone.

(d) *Regulations.* (1) Under § 165.33 of this part, entry into a security zone is prohibited unless authorized by the Captain of the Port Mobile or a designated representative.

(2) While a cruise ship is transiting on the Mobile Ship Channel shoreward of the Mobile Sea Buoy, and while transiting in the Port of Mobile, all persons and vessels are prohibited from entering within 100 yards of a cruise ship.

(3) While a cruise ship is moored in the Port of Mobile, all persons and vessels are prohibited from entering within 25 yards of a cruise ship.

(4) Persons or vessels that desire to enter into the security zone for the purpose of passing or overtaking a cruise ship that is in transit on the Mobile Ship Channel or in the Port of Mobile must contact the on-scene Coast

Guard representative, request permission to conduct such action, and receive authorization from the on-scene Coast Guard representative prior to initiating such action. The on-scene Coast Guard representative may be contacted on VHF-FM channel 16.

(5) All persons and vessels authorized to enter into this security zone must obey any direction or order of the Captain of the Port or designated representative. The Captain of the Port Mobile may be contacted by telephone at (251) 441–5976. The on-scene Coast Guard representative may be contacted on VHF-FM channel 16.

(6) All persons and vessels shall comply with the instructions of the Captain of the Port Mobile and designated on-scene U.S. Coast Guard patrol personnel. On-scene Coast Guard patrol personnel include commissioned, warrant, and petty officers of the U.S. Coast Guard.

[COTP Mobile–04–057, 70 FR 20813, Apr. 22, 2005]

§ 165.836 Security Zone; Escorted Vessels, Mobile, Alabama, Captain of the Port.

(a) *Definitions*. The following definitions apply to this section:

COTP means Captain of the Port Mobile, AL.

Designated representatives means Coast Guard Patrol Commanders including Coast Guard coxswains, petty officers and other officers operating Coast Guard vessels, and Federal, State, and local officers designated by or assisting the COTP, in the enforcement of the security zone.

Escorted vessel means a vessel, other than a large U.S. naval vessel as defined in 33 CFR 165.2015, that is accompanied by one or more Coast Guard assets or other Federal, State, or local law enforcement agency assets clearly identifiable by flashing lights, vessel markings, or with agency insignia as follows: Coast Guard surface or air asset displaying the Coast Guard insignia. State and/or local law enforcement asset displaying the applicable agency markings and/or equipment associated with the agency. *Escorted vessel* also means a moored or anchored vessel that was escorted by Coast Guard assets or other Federal, State, or local law enforcement agency assets to its present location and some or all of those properly marked assets remain on-scene to continue to enforce the security zone.

Minimum safe speed means the speed at which a vessel proceeds when it is fully off plane, completely settled in the water and not creating excessive wake or surge. Due to the different speeds at which vessels of different sizes and configurations may travel while in compliance with this definition, no specific speed is assigned to minimum safe speed. In no instance should minimum safe speed be interpreted as a speed less than that required for a particular vessel to maintain steerageway. A vessel is not proceeding at minimum safe speed if it is:

(1) On a plane;

(2) In the process of coming up onto or coming off a plane; or

(3) Creating an excessive wake or surge.

(b) *Regulated area*. All navigable waters, as defined in 33 CFR 2.36, within the Captain of the Port Zone, Mobile, Alabama, as described in 33 CFR 3.40–10.

(c) *Security zone*. A 500-yard security zone is established around each escorted vessel within the regulated area described in paragraph (b) of this section. This is a moving security zone when the escorted vessel is in transit and becomes a fixed zone when the escorted vessel is anchored or moored. A security zone will not extend beyond the boundary of the regulated area described in paragraph (b) of this section.

(d) *Regulations*. (1) The general regulations for security zones contained in § 165.33 of this part applies to this section.

(2) A vessel may request the permission of the COTP Mobile or a designated representative to enter the security zone described in paragraph (c) of this section. If permitted to enter the security zone, a vessel must proceed at the minimum safe speed and must comply with the orders of the COTP or a designated representative.

(e) *Notice of security zone*. The COTP will inform the public of the existence or status of the security zones around escorted vessels in the regulated area

by broadcast notices to mariners, normally issued at 30-minute intervals while the security zones remains in effect. Escorted vessels will be identified by the presence of Coast Guard assets or other Federal, State or local law enforcement agency assets.

(f) *Contact information*. The COTP Mobile may be reached via phone at (251) 441–6211. Any on scene Coast Guard or designated representative assets may be reached via VHF–FM channel 16.

[USCG–2008–1013, 73 FR 67107, Nov. 13, 2008, as amended at 74 FR 22102, May 12, 2009]

§ 165.837 Safety Zone; Invista Inc Facility Docks, Victoria Barge Canal, Victoria, Texas.

(a) *Location*. The following area is a safety zone: All waters contained within a 500-foot (152.5m) extension east and west of the Invista Inc facility docks while performing offloading operations.

(b) *Enforcement period*. This rule will be enforced for periods of 24–30 hours twice a month, from the time the oversized barge docks at the Invista Inc facility until the vessel departs the facility upon conclusion of its offloading operations. The Captain of the Port Corpus Christi will issue a Broadcast Notice to Mariners before beginning enforcement and upon ceasing enforcement of the safety zone.

(c) *Definitions*. The following definition applies to this section:

designated representative means any commissioned, warrant, and petty officers of the Coast Guard on board Coast Guard, Coast Guard Auxiliary, and local, state, and Federal law enforcement vessels who have been authorized to act on the behalf of the Captain of the Port Corpus Christi.

(d) *Regulations*. (1) Persons desiring to transit the area of the safety zone may contact the Captain of the Port at telephone number 1–361–939–6393, or the barge on VHF Channel 16 (156.800MHz) to seek permission to transit the area. If permission is granted, all persons and vessels must comply with the instructions of the Captain of the Port or his or her designated representative.

(2) All persons and vessels must comply with the instructions of the Coast Guard Captain of the Port or the designated representative.

(3) Upon being hailed by U.S. Coast Guard patrol personnel by siren, radio, flashing light, or other means the operator of a vessel must proceed as directed.

(4) The Coast Guard may be assisted by other Federal, State, or local agencies.

(5) In accordance with the general regulations in 33 CFR part 165.23, no person or vessel may enter or remain in the zone described in paragraph (a) of this section except for support vessels/aircraft and support personnel, or other vessels authorized by the Captain of the Port Corpus Christi or his designated representative.

(e) *Penalties*. Vessels or persons violating this rule are subject to the penalties set forth in 33 U.S.C. 1232 and 50 U.S.C. 192.

[USCG–2009–0797, 75 FR 13436, Mar. 22, 2010]

§ 165.838 Regulated Navigation Area; Gulf Intracoastal Waterway, Inner Harbor Navigation Canal, New Orleans, LA.

(a) *Location*. The following is a regulated navigation area (RNA):

(1) The Gulf Intracoastal Waterway (GIWW) from Mile Marker (MM) 22 East of Harvey Locks (EHL), west on the GIWW, including the Michoud Canal and the Inner Harbor Navigation Canal (IHNC), extending North ½ mile from the Seabrook Flood Gate Complex out into Lake Pontchartrain and South to the IHNC Lock.

(2) The Harvey Canal, between the Lapalco Boulevard Bridge and the confluence of the Harvey Canal and the Algiers Canal;

(3) The Algiers Canal, from the Algiers Lock to the confluence of the Algiers Canal and the Harvey Canal;

(4) The GIWW from the confluence of Harvey Canal and Algiers Canal to MM 7.5 West of Harvey Locks (WHL)

(b) *Definitions*. As used in this section:

(1) Breakaway means a floating vessel that is adrift and that is not under its own power or the control of a towboat, or secured to its moorings.

(2) COTP means the Captain of the Port, New Orleans;

(3) *Facility* means a fleeting, mooring, industrial facility or marina along the shoreline at which vessels are or can be

moored and which owns, possesses, moors, or leases vessels located in the areas described in paragraph (a) of this section.

(3) Fleet includes one or more tiers of barges.

(4) Fleeting or mooring facility means the area along the shoreline at which vessels are or can be moored.

(5) Floating vessel means any floating vessel to which the Ports and Waterways Safety Act, 33 U.S.C. 1221 *et seq.*, applies.

(6) Mooring barge or spar barge means a barge moored to mooring devices or secured to the ground by spuds, and to which other barges may be moored.

(7) Mooring device includes a deadman, anchor, pile or other reliable holding apparatus.

(8) *Navigational structures* are the Seabrook Floodgate Complex, the IHNC Lake Borgne Surge Barrier, and the West Closure Complex components of the Hurricane and Storm Damage Risk Reduction System (HSDRRS).

(9) Person in charge includes any owner, agent, pilot, master, officer, operator, crewmember, supervisor, dispatcher or other person navigating, controlling, directing or otherwise responsible for the movement, action, securing, or security of any vessel, barge, tier, fleet or fleeting or mooring facility subject to the regulations in this section.

(10) Tier means barges moored interdependently in rows or groups.

(11) *Port Coordination Team* is a body of public and private port stakeholders led by the COTP whose purpose is to share information, establish priorities, recommend and implement actions to address risks to ports and waterways during incidents and events.

(12) *Tropical Event* means the time period immediately preceding, during, and immediately following the expected impact of heavy weather from a tropical cyclone.

(c) *Enforcement*. (1) The provisions of paragraph (d) of this section will be enforced during a tropical event beginning 24 hours in advance of the predicted closure of the IHNC Lake Borgne Surge Barrier structure within the HSDRRS (IHNC & GIWW) in the area defined in paragraph (a)(1) of this section.

(2) The provisions of paragraph (d) of this section will be enforced beginning 24 hours in advance of the predicted closure of the West Closure Complex within the HSDRRS (Harvey & Algiers Canals) in the area defined in paragraphs (a)(2) through (4) of this section.

(3) If the Coast Guard receives notice of a closure less than 24 hours before closure, the provisions of paragraph (d) of this section will be enforced upon the COTP receiving the notice of predicted closing.

(4) In the event that a particularly dangerous storm is predicted, the COTP, in consultation with the Port Coordination Team, may require all floating vessels to evacuate the RNA beginning as early as 72 hours before predicted closure of any navigational structure or upon notice that particularly dangerous storm conditions are approaching, whichever is less.

(5) The COTP will notify the maritime community of the enforcement periods for this RNA through Marine Safety Information Bulletins and Safety Broadcast Notices to Mariners.

(d) *Regulations*. During the period that the RNA is enforced and before closure of the navigational structures, all floating vessels must depart the RNA except as follows:

(1) Floating vessels may remain in the Harvey and Algiers Canals, provided they are moored sufficiently to prevent a breakaway and meet the minimum mooring requirements and conditions set forth in paragraphs (f) and (g) of this section.

(2) Floating vessels may remain in the Michoud Canal at least ¼ mile north of the intersection of the Michoud Canal and the GIWW, the GIWW from MM 15 EHL to MM 10 EHL, provided they are moored sufficiently to prevent a breakaway and meet the minimum mooring requirements and conditions set forth in paragraphs (f) and (g) of this section.

(3) During the period that the RNA is enforced and before closure of the navigational structures, vessels may transit through the RNA en route to a destination outside of the RNA given there is sufficient time to transit prior

to the closure of a navigational structure, or they may transit to a facility within the RNA with which they have a prearranged agreement. These vessel movements and time critical decisions will be made by the COTP in consultation with the Port Coordination Team.

(4) The COTP may review, on a case-by-case basis, alternatives to minimum mooring requirements and conditions set forth in paragraphs (f) and (g) of this section and may approve a deviation to these requirements and conditions should they provide an equivalent level of safety.

(e) *Special requirements for facilities*. In addition to the mooring and towboat requirements discussed in paragraph (f) and (g) of this section, Facilities within the area described in paragraph (a) of this section that wish to deviate from these restrictions because they have vessels intending to remain within the areas allowed in paragraphs (d)(1) and (2) of this section shall comply with the below documentation and maintenance requirements in order to obtain the COTP's approval for their vessel(s) to remain in the closed RNA.

(1) *Annual Hurricane Operations Plan*. All facilities that have vessels intending to deviate from this RNA and remain within the areas allowed in paragraphs (d)(1) and (2) of this section shall develop an operations plan. The operations plan shall be readily available by May 1st of each calendar year for review by the COTP. The Annual Hurricane Operations Plan shall include:

(i) A description of the maximum number of vessels the facility intends to have remaining at any one time during hurricane season.

(ii) A detailed plan for any vessel(s) that are intended to be sunk/grounded in place when the RNA is enforced if evacuation is not possible.

(iii) A diagram of the waterfront facility and fleeting area.

(iv) Name, call sign, official number, and operational status of machinery on board (*i.e.*, engines, generators, fire fighting pumps, bilge pumps, anchors, mooring machinery, etc.) each standby towboat.

(v) Characteristics for each vessel remaining at the fleeting or mooring facility, as applicable (length, breadth, draft, air draft, gross tonnage, hull type, horsepower, single or twin screw);

(vi) Details of mooring arrangements in accordance with mooring requirements and conditions set forth in paragraphs (g) and (h) of this section or COTP case-by-case approved deviations;

(vii) Certification by a professional engineer that the mooring arrangements are able to withstand winds of up to 140 mph, a surge water level of eleven feet, a current of four mph and a wave height of three feet within the canal basin in the area defined in paragraph (a)(1) of this section and a surge water level of eight feet, a current of four mph, and a wave height of two and a half feet within the canal basin in the area defined in paragraphs (a)(2) through (4) of this section;

(viii) Emergency contact information for the owner/operator, and/or agent of the facility/property.

(ix) 24-hour emergency contact information for qualified individuals empowered in writing by the owners/operators to make on-site decisions and authorize expenditures for any required pollution response or salvage.

(x) Full insurance disclosure to the COTP. Vessels moored to a facility shall provide insurance information to the facility.

(2) *Storm Specific Verification Report*. 72 hrs prior to predicted closure of the navigational structures, those facilities which have vessels that intend to remain within the RNA shall submit a Storm Specific Verification Report to the COTP New Orleans. The requirements for this Storm Specific Verification Report are located in the Canal Hurricane Operations Plan, which is Enclosure Six to the Sector New Orleans Maritime Hurricane Contingency Port Plan, *http://homeport.uscg.mil/nola*. The report shall include:

(i) Updated contact information, including names of manned towboat(s) and individuals remaining on the towboat(s).

(ii) Number of vessels currently moored and mooring configurations if less than stated in Annual Hurricane Operations Plan.

(iii) If the number of vessels exceeds the amount listed in the Annual Hurricane Operations Plan, describe process and timeframe for evacuating vessels to bring total number of vessels into alignment with the Annual Hurricane Operations Plan.

(3) The person in charge of a facility shall inspect each mooring wire, chain, line and connecting gear between mooring devices and each wire, line and connecting equipment used to moor each vessel, and each mooring device. Inspections shall be performed according to the following timelines and guidance:

(i) Annually between May 1 and June 1 of each calendar year; and

(ii) After vessels are added to, withdrawn from, or moved at a facility, each mooring wire, line, and connecting equipment of each barge within each tier affected by that operation; and

(iii) At least weekly between June 1 and November 30; and

(iv) 72 hrs prior to predicted closure of the navigation structures within this RNA; or within 6 hrs of the predicted closure, if the notice of predicted closure is less than 72 hrs.

(4) The person who inspects moorings shall take immediate action to correct any deficiency.

(5) *Facility records*. The person in charge of a fleeting or mooring facility shall maintain, and make available to the COTP, records containing the following information:

(i) The time of commencement and termination of each inspection.

(ii) The name of each person who makes the inspection.

(iii) The identification of each vessel, barge entering or departing the fleeting or mooring facility, along with the following information:

(A) Date and time of entry and departure; and

(B) The names of any hazardous cargo which the vessel is carrying.

(6) The person in charge of a facility shall ensure continuous visual surveillance of all vessels at the facility.

(7) The person who observes the vessels shall:

(i) Inspect for movements that are unusual for properly secured vessels; and

(ii) Take immediate action to correct each deficiency.

(f) *Mooring requirements*. Facility owners shall consider all requirements within this section as minimum standards. Title 33 CFR 165.803, United Facilities Criteria (UFC) 4–159 and American Society of the Civil Engineers (ASCE)7 should be utilized by Professional Engineers in the certification of the Annual Hurricane Operations Plan.

(1) No person may secure a vessel to trees or to other vegetation.

(2) No person may allow a vessel to be moored with unraveled or frayed lines or other defective or worn mooring.

(3) No person may moor barges side to side unless they are secured to each other from fittings as close to each corner of abutting sides as practicable.

(4) No person may moor barges end to end unless they are secured to each other from fittings as close to each corner of abutting ends as practicable.

(5) A vessel may be moored to mooring devices if both ends of that vessel are secured to mooring devices.

(6) Barges may be moored in tiers if each shoreward barge is secured to mooring devices at each end.

(7) A vessel must be secured as near as practicable to each abutting corner by:

(i) Three parts of wire rope of at least 1¼ inch diameter with an eye at each end of the rope passed around the timberhead, caval, or button;

(ii) A mooring of natural or synthetic fiber rope that has at least the breaking strength of three parts of 1¼ inch diameter wire rope; or

(iii) Fixed rigging that is at least equivalent to three parts of 1¼ inch diameter wire rope.

(8) The person in charge shall ensure that all mooring devices, wires, chains, lines and connecting gear are of sufficient strength and in sufficient number to withstand forces that may be exerted on them by moored vessels/barges.

(g) *Towboat Requirements*. The person in charge of a fleeting or mooring facility must ensure:

(1) Each facility consisting of eight or more vessels that are not under their own power must be attended by

at least one radar-equipped towboat for every 50 vessels.

(2) Each towboat required must be:

(i) Able to secure any breakaways;

(ii) Capable of safely withdrawing or moving any vessel at the fleeting or mooring facility;

(iii) Immediately operational;

(iv) Radio-equipped;

(v) No less than 800 horsepower;

(vi) Within 500 yards of the vessels.

(3) The person in charge of each towboat required must maintain a continuous guard on the frequency specified by current Federal Communications Commission regulations found in 47 CFR part 83; a continuous watch on the vessels moored at facility; and report any breakaway as soon as possible to the COTP via telephone, radio or other means of rapid communication.

(h) Transient vessels will not be permitted to seek safe haven in the RNA except in accordance with a prearranged agreement between the vessel and a facility within the RNA.

(i) *Penalties*. Failure to comply with this section may result in civil or criminal penalties pursuant to the Ports and Waterways Safety Act, 33 U.S.C. 1221 *et seq*.

[USCG–2009–0139, 79 FR 21135, Apr. 15, 2014]

§ 165.839 Safety Zone; Large Cruise Ships; Lower Mississippi River, Southwest Pass Sea Buoy to Mile Marker 96.0, New Orleans, LA.

(a) *Location*. Within the Lower Mississippi River and Southwest Pass, moving safety zones are established around all large cruise ships transiting between the Southwest Pass Entrance Lighted Buoy ''SW'', at approximate position 28°52′42″ N, 89°25′54″ W [NAD 83] and Lower Mississippi River mile marker 96.0 in New Orleans, Louisiana. The moving safety zone extends bank to bank, encompassing all waters one-mile ahead and one-mile astern of a large cruise ship. The zone remains in effect during the entire transit of the large cruise ship.

(b) *Definitions*. As used in this section the term ''large cruise ship'' is defined as a vessel over 100 feet in length, carrying more than 500 passengers for hire, making a voyage lasting more than 24 hours, any part of which is on the high seas, and for which passengers are embarked or disembarked in the United States or its territories.

(c) *Regulations*. (1) In accordance with the general regulations in 33 CFR Part 165, Subpart C, no person or vessel may enter or remain in the Safety Zone except for vessels authorized by the Captain of the Port or Designated Representatives, except as provided for in paragraph (c)(3) of this section.

(2) For this section the Pilot directing the movement of the large cruise ship under the authority of the master has the authority to allow other vessels to enter the safety zone when necessary.

(3) All vessels are prohibited from entering this safety zone unless authorized as follows:

(i) Vessels that have made suitable passing or overtaking arrangements with the pilot onboard the large cruise ship may enter into this safety zone in accordance with those agreed upon arrangements.

(ii) Moored vessels or vessels anchored in a designated anchorage area may remain in their current moored or anchored position while the large cruise ship transits the area.

(iii) Barge Fleets or vessels working a fleet may continue their current operations while the large cruise ship transits the area.

(4) Vessels requiring a deviation from this rule must request permission from the Captain of the Port New Orleans. The Captain of the Port New Orleans may be contacted at (504) 365–2210.

[USCG–2010–0012, 77 FR 65818, Oct. 31, 2012]

§ 165.840 Regulated Navigation Area, Gulf of Mexico: Mississippi Canyon Block 20, South of New Orleans, LA.

(a) *Location*. The following area is a Regulated Navigation Area: A 300-foot diameter area at the water surface centered on the following coordinates: 28°56'12.619''N, 008°58'10.303''W, and extending the entire water column from the surface to the seabed.

(b) *Regulations*. (1) In accordance with the general regulations in § 165.11 of this part, all vessels are prohibited from anchoring, mooring, fishing, or otherwise loitering in the above described area except as authorized by the Captain of the Port, New Orleans.

(2) Persons or vessels requiring deviations from this rule must request permission from the Captain of the Port New Orleans. The Captain of the Port New Orleans may be contacted by telephone at (504) 365–2200.

[USCG–2013–0064, 78 FR 59236, Sept. 26, 2013]

§ 165.841 Safety Zone; Barge Launches; Gulfport Lake; Gulfport, MS.

(a) *Location.* The following area is a safety zone: Gulfport Lake, to include all waters between an eastern boundary represented by positions 30° 25′ 37.2″ N, 089° 03′ 09.7″ W to 30° 25′ 27.0″ N, 089° 03′ 09.7″ W and a western boundary represented by positions 30° 25′ 35.4″ N, 089° 03′ 45.7″ W to 30° 25′ 28.8″ N, 089° 03′ 45.7″ W.

(b) *Effective period and enforcement dates.* This safety zone is effective immediately on December 24, 2013 and enforceable through actual notice beginning November 8, 2013. The COTP Mobile or a designated representative will inform the public through broadcast notice to mariners of enforcement periods for the safety zone, giving at least 24 hour notice before enforcement begins. Enforcement periods are expected to occur once a month for approximately two (2) hours.

(c) *Regulations.* (1) In accordance with the general regulations in § 165.23 of this part, entry into this zone is prohibited unless authorized by the Captain of the Port Mobile or a designated representative.

(2) Persons or vessels desiring to enter into or passage through the zone must request permission from the Captain of the Port Mobile or a designated representative. They may be contacted on VHF–FM channels 16 or by telephone at 251–441–5976.

(3) If permission is granted, all persons and vessels shall comply with the instructions of the Captain of the Port or designated representative.

(d) *Informational broadcasts.* The Captain of the Port or a designated representative will inform the public through broadcast notices to mariners of the enforcement period for the safety zone as well as any changes that may occur.

[USCG–2013–0837, 78 FR 77597, Dec. 24, 2013]

EFFECTIVE DATE NOTE: By USCG–2013–0837, 78 FR 77597, Dec. 24, 2013, § 165.841 was added, effective from Dec. 24, 2013, through Dec. 31, 2016.

NINTH COAST GUARD DISTRICT

§ 165.T09–0140 Safety Zone; USA Triathlon, Milwaukee Harbor, Milwaukee, Wisconsin.

(a) *Location.* All waters of Milwaukee Harbor, including Lakeshore inlet and Discovery World Marina, west of a line across the entrance to the Discovery World Marina connecting 43°02′15.1″ N, 087°53′37.4″ W and 43°01′44.2″ N, 087°53′44.6″ W (NAD 83).

(b) *Effective period.* This section is effective from August 1, 2013, until August 30, 2014. This safety zone will be enforced for periods in August 2013 and 2014. The Captain of the Port, Lake Michigan, will establish an enforcement schedule via a Notice of Enforcement when the exact dates are known. The Captain of the Port, Lake Michigan, will also establish the 2014 enforcement schedule via a Notice of Enforcement.

(c) *Regulations.* (1) In accordance with the general regulations in § 165.23 of this part, entry into, transiting, or anchoring within this safety zone is prohibited unless authorized by the Captain of the Port, Lake Michigan or his designated on-scene representative.

(2) This safety zone is closed to all vessel traffic, except as may be permitted by the Captain of the Port, Lake Michigan or his designated representative.

(3) The ''on-scene representative'' of the Captain of the Port, Lake Michigan is any Coast Guard commissioned, warrant or petty officer who has been his designated by the Captain of the Port, Lake Michigan to act on his behalf.

(4) Vessel operators desiring to enter or operate within the safety zone shall contact the Captain of the Port, Lake Michigan or his on-scene representative to obtain permission to do so.

(5) The Captain of the Port, Lake Michigan or his on-scene representative may be contacted via VHF Channel 16. Vessel operators given permission to enter or operate in the safety zone must comply with all directions given to them by the Captain of the

Port, Lake Michigan, or his on-scene representative.

EFFECTIVE DATE NOTE: By USCG–2013–0140, 78 FR 31417, May 24, 2013, temporary § 165.T09–0140 was added, effective from Aug. 1, 2013 to Aug. 30, 2014.

§ 165.T09–0971 Safety zone; overhead cable replacement, Maumee River, Toledo, OH.

(a) *Location*. The following area is a temporary safety zone: all U.S. navigable waters of the Maumee River, Toledo, OH, starting from the CSX Railroad Bridge at River Mile Marker 1.07 and ending 700 feet down river from the CSX Railroad Bridge.

(b) *Effective and enforcement period*. This regulation will be enforced from 8:30 a.m. on November 27, 2012 until 6:30 p.m. on December 7, 2012. This regulation will be enforced from 8:30 a.m. until 6:30 p.m. on each day of this period.

(c) Definitions. The following definitions apply to this section:

(1) ''On-scene Representative'' means any Coast Guard Commissioned, warrant, or petty officer designated by the Captain of the Port Detroit to monitor a safety zone, permit entry into the zone, give legally enforceable orders to persons or vessels within the zones, and take other actions authorized by the Captain of the Port.

(2) ''Public vessel'' means vessels owned, chartered, or operated by the United States, or by a State or political subdivision thereof.

(d) Regulations. (1) In accordance with the general regulations in § 165.23 of this part, entry into, transiting, or anchoring within this safety zone is prohibited unless authorized by the Captain of the Port Detroit, or his designated representative.

(2) This safety zone is closed to all vessel traffic, excepted as may be permitted by the Captain of the Port Detroit or his designated representative. All persons and vessels must comply with the instructions of the Coast Guard Captain of the Port or his designated representative. Upon being hailed by the U.S. Coast Guard by siren, radio, flashing light or other means, the operator of a vessel shall proceed as directed.

(3) All vessels must obtain permission from the Captain of the Port or his designated representative to enter, move within, or exit the safety zone established in this section when this safety zone is enforced. Vessels and persons granted permission to enter the safety zone must obey all lawful orders or directions of the Captain of the Port or a designated representative. While within a safety zone, all vessels must operate at the minimum speed necessary to maintain a safe course.

(e) Exemption. Public vessels, as defined in paragraph (b) of this section, are exempt from the requirements in this section.

(f) Waiver. For any vessel, the Captain of the Port Detroit or his designated representative may waive any of the requirements of this section, upon finding that operational conditions or other circumstances are such that application of this section is unnecessary or impractical for the purposes of public or environmental safety.

(g) Notification. The Captain of the Port Detroit will notify the public that the safety zones in this section are or will be enforced by all appropriate means to the affected segments of the public including publication in the FEDERAL REGISTER as practicable, in accordance with 33 CFR 165.7(a). Such means of notification may also include, but are not limited to Broadcast Notice to Mariners or Local Notice to Mariners. The Captain of the Port will issue a Broadcast Notice to Mariners notifying the public when enforcement of the safety zone is cancelled.

[USCG–2012–0971, 77 FR 71699, Dec. 4, 2012]

§ 165.901 Great Lakes—regulated navigation areas.

(a) *Lake Huron*. The following are regulated navigation areas:

(1) The waters of Lake Huron known as South Channel between Bois Blanc Island and Cheboygan, Michigan; bounded by a line north from Cheyboygan Crib Light (LL–1340) at 45°39′48″ N, 84°27′36″ W; to Bois Blanc Island at 45°43′42″ N, 84°27′36″ W; and a line north from the mainland at 45°43′00″ N, 84°35′30″ W; to the western tangent of Bois Blanc Island at 45°48′42″ N, 84°35′30″ W.

(2) The waters of Lake Huron between Mackinac Island and St. Ignace, Michigan, bounded by a line east from position 45°52′12″ N, 84°43′00″ W; to Mackinac Island at 45°52′12″ N, 84°39′00″ W; and a line east from the mainland at 45°53′12″ N, 84°43′30″ W; to the northern tangent of Mackinac Island at 45°53′12″ N, 84°38′48″ W.

(b) *Lake Michigan*. The following is a regulated navigation area—The waters of Lake Michigan known as Gray's Reef Passage bounded by a line from Gray's Reef Light (LL–2006) at 45°46′00″ N, 85°09′12″ W; to White Shoals Light (LL–2003) at 45°50′30″ N, 85°08′06″ W; to a point at 45°49′12″ N, 85°04′48″ W; then to a point at 45°45′42″ N, 85°08′42″ W; then to the point of beginning.

(c) *Regulations*. The COTP, Sault Ste. Marie, will close and open these regulated navigation areas as ice conditions dictate. Under normal seasonal conditions, only one closing each winter and one opening each spring are anticipated. Prior to the closing or opening of the regulated navigation areas, the COTP will give interested parties, including both shipping interests and island residents, not less than 72 hours notice of the action. No vessel may navigate in a regulated navigation area which has been closed by the COTP. Under emergency conditions, the COTP may authorize specific vessels to navigate in a closed regulated navigation area.

[CGD 79–034, 47 FR 29660, July 8, 1982, as amended by CGD 79–026, 48 FR 35408, Aug. 4, 1983]

§ 165.902 Niagara River at Niagara Falls, New York—safety zone.

(a) The following is a safety zone—The United States waters of the Niagara River from the crest of the American and Horseshoe Falls, Niagara Falls, New York to a line drawn across the Niagara River from the downstream side of the mouth of Gill Creek to the upstream end of the breakwater at the mouth of the Welland River.

§ 165.903 Safety Zones: Cuyahoga River and Old River, Cleveland, OH.

(a) *Location*. The waters of the Cuyahoga River and the Old River extending ten feet into the river at the following eleven locations, including the adjacent shorelines, are safety zones, coordinates for which are based on NAD 83.

(1) From the point where the shoreline intersects longitude 81°42′24.5″ W, which is the southern side of the Norfolk and Southern No. 1 railroad bridge, southeasterly along the shore for six hundred (600) feet to the point where the shoreline intersects longitude 81°42′24.5″ W, which is the Holy Moses Water Taxi Landing at Fado's Restaurant.

(2) One hundred (100) feet downriver to one hundred (100) feet upriver from 41 degrees 29′53.5″ N, 81 degrees 42′33.5″ W, which is the knuckle on the north side of the Old River entrance at Ontario Stone.

(3) Fifty (50) feet downriver to fifty (50) feet upriver from 41 degrees 29′48.4″ N, 81 degrees 42′44″ W, which is the knuckle adjacent to the Ontario Stone warehouse on the south side of the Old River.

(4) From 41 degrees 29′51.1″ N, 81 degrees 42′32.0″ W, which is the corner of Christie's Cabaret pier at Sycamore Slip on the Old River, to fifty (50) feet east of 41 degrees 29′55.1″ N, 81 degrees 42′27.6″ W, which is the north point of the pier at Shooter's Restaurant on the Cuyahoga River.

(5) Twenty-five (25) feet downriver to twenty-five (25) feet upriver of 41 degrees 29′48.9″ N, 81 degrees 42′10.7″ W, which is the knuckle toward the downriver corner of the Nautica Stage.

(6) Ten (10) feet downriver to ten (10) feet upriver of 41 degrees 29′45.5″ N, 81 degrees 42′9.7″ W, which is the knuckle toward the upriver corner of the Nautica Stage.

(7) The fender on the west bank of the river at 41 degrees 29′45.2″ N, 81 degrees 42.10″ W, which is the knuckle at Bascule Bridge (railroad).

(8) The two hundred seventy (270) foot section on the east bank of the river between the Columbus Road bridge (41 degrees 29′18.8″ N, 81 degrees 42′02.3W) downriver to the chain link fence at the upriver end of the Commodores Club Marina.

(9) Fifty (50) feet downriver of twenty-five (25) feet upriver from 41 degrees 29′24.5″ N, 81 degrees 41′57.2″ W, which is the knuckle at the Upriver Marine fuel pump.

(10) Seventy-five (75) feet downriver to seventy-five (75) feet upriver from 41 degrees 29′33.7″ N, 81 degrees 41′57.5″ W. which is the knuckle adjacent to the warehouse at Alpha Precast Products (United Ready Mix).

(11) Fifteen (15) feet downriver to fifteen (15) feet upriver from 41 degrees 29′41″ N, 81 degrees 41′38.6″ W, which is the end of the chain link fence between The Club Mega and Shippers C & D.

(b) *Regulations*—(1) *General Rule*. Except as provided below, entry of any kind or for any purpose into the foregoing zones is strictly prohibited in accordance with the general regulations in § 165.23 of this part.

(2) *Exceptions*. Any vessel may transit, but not moor, stand or anchor in, the foregoing zones as necessary to comply with the Inland Navigation Rules or to otherwise facilitate safe navigation. Cargo vessels of 1600 gross tons (GT) or greater may moor in these zones when conducting cargo transfer operations.

(3) *Waivers*. Owners or operators of docks wishing a partial waiver of these regulations may apply to the Captain of the Port, Cleveland, Ohio. Partial waivers will only be considered to allow for the mooring of vessels in a safety zone when vessels of 1600 GT on greater are not navigating in the proximate area. Any requests for a waiver must include a plan to ensure immediate removal of any vessels moored in a safety zone upon the approach of a vessel(s) 1600 GTs or greater.

[COTP Cleveland REG 89–01, 54 FR 9778, Mar. 8, 1989, as amended by CGD 09–95–018, 61 FR 37685, July 19, 1996; USCG–2000–7223, 65 FR 40059, June 29, 2000; USCG–2001–9286, 66 FR 33642, June 25, 2001]

§ 165.904 Lake Michigan at Chicago Harbor & Burnham Park Harbor—Safety and Security Zone.

(a) *Location*. All waters of Lake Michigan within Burnham Park Harbor shoreward of a line across the entrance of the harbor connecting coordinates 41°51′09″ N, 087°36′36″ W and 41°51′11″ N, 087°36′22″ W.

(b) *Effective times and dates*. This safety and security zone will be in effect at various times to be published in the Coast Guard Local Notice to Mariners or broadcasted via Marine Radio VHF-FM Channels 16 & 22. These times will include the actual effective time and date and the termination time and date.

(c) *Restrictions*. (1) In accordance with the general regulations in section 165.23 and 165.33 of this part, entry into this zone is prohibited, unless authorized by the U.S. Coast Guard Captain of the Port Lake Michigan, or the U.S. Secret Service. Other general requirements in §§ 165.23 and 165.33 also apply. Further, no person may enter or remain in the shoreline areas of the established safety and security zone, unless cleared by a Coast Guard or U.S. Secret Service official.

(2) Vessels in Burnham Park Harbor at the commencement of the safety and security zone must be moored and remain moored while the safety and security zone is established, unless authorized to get underway by a Coast Guard or U.S. Secret Service official.

(3) No person may engage in swimming, snorkeling, or diving within the established safety and security zone, except with the permission of the Captain of the Port or U.S. Secret Service.

[CGD09–94–005, 59 FR 45227, Sept. 1, 1994, as amended by USCG–2011–0489, 76 FR 63204, Oct. 12, 2011]

§ 165.905 USX Superfund Site Safety Zones: St. Louis River.

(a) The following areas of the St. Louis River, within the designated boxes of latitude and longitude, are safety zones:

(1) *Safety Zone* #1 (*North Spirit Lake*):

North Boundary: 46°41′33″ W
South Boundary: 46°41′18″ W
East Boundary: 92°11′53″ W
West Boundary: 92°12′11″ W

(2) Safety Zone #2 (*South Spirit Lake*):

North Boundary: 46°40′45″ N
South Boundary: 46°40′33″ N
East Boundary: 92°11′40″ W
West Boundary: 92°12′05″ W

(b) Transit of vessels through the waters covered by these zones is prohibited. Swimming (including water skiing or other recreational use of the water which involves a substantial risk of immersion in the water) or taking of

fish (including all forms of aquatic animals) from the waters covered by these safety zones is prohibited at all times.

[CGD09–95–026, 60 FR 52862, Oct. 11, 1995]

§ 165.906 Lakeside Yacht Club in Cleveland Harbor, Cleveland, OH—regulated navigation areas.

(a) *Restricted Areas.* The following are areas inside Cleveland Harbor which are subject to navigational restrictions based on the height of vessel masts as specified in paragraph (b) of this section. For the purpose of this section, the term ''mast'' will be used to include masts, antennae or any other portion of the vessel extending above the waterline. All of these areas are inside the ''Lakeside Yacht Club entrance channel,'' defined as the water area between the Lakeside Yacht Club jetties and the Burke Lakefront Airport landfill, or inside the ''Lakeside Yacht Club docks,'' defined as the docking area inside the Lakeside Yacht Club jetties and immediately adjacent to Lakeside Yacht Club.

(1) *Restricted area no. 1.* Restricted area no. 1 is the water area on the southwest end of the Lakeside Yacht Club entrance channel which is southwest of a line running 328° T and northwest of a line running 232° T from a point at 41°31′28.00″ N, 81°40′02.60″ W, which point is marked by a fixed flashing yellow light.

(2) *Restricted area no. 2.* Restricted area no. 2 is the water area of the Lakeside Yacht Club entrance channel which is outside restricted area no. 1 and the entrance to the Yacht Club docking area, and southwest of a line running 328° T from the intersection of 81°39′58.47″ W and reference line running between point A at 41°31′33.45″ N, 81°39′47.45″ W and point B at 41°31′19.67″ N, 81°40′19.17″ W.

(3) *Restricted area no. 3.* Restricted area no. 3 is the water area of the Lakeside Yacht Club entrance channel which is outside restricted area no. 1, and southwest of a line running 328° T from point A at 41°31′33.45″ N., 81°39′47.45″ W.

(4) *Restricted area no. 4.* Restricted area no. 4 is the area inside the Lakeside Yacht Club docks which is southwest of a line running 328° T from the intersection of 81°39′58.47″ W and a reference line running between point A at 41°31′33.45″ N, 81°39′47.45″ W and point B at 41°31′19.67″ N, 81°40′19.17″ W, and northwest of the same reference line.

(5) *Restricted area no. 5.* Restricted area no. 5 is the area inside the Lakeside Yacht Club docks which is outside restricted area 4 and northwest of a line 183 feet southeast and parallel to a reference line running between point A at 41°31′33.45″ N, 81°39′47.45″ W and point B at 41°31′19.67″ N, 81°40′19.17″ W.

(6) *Restricted area no. 6.* Restricted area no. 6 is the area inside the Lakeside Yacht Club docks which is outside restricted areas 4 and 5.

(b) *Restrictions applicable to vessels of certain heights.* Vessels with masts of certain heights are subject to the following restrictions with reference to the restricted areas detailed in paragraph (a) of this section. The height of a vessel is the height above the water line of masts, antennas, navigational equipment, or any other structure.

(1) *Less than 41 feet.* Vessels less than 41 feet in height are not subject to any restrictions under this section.

(2) *41 to 45 feet.* Vessels at least 41 feet in height yet less than 45 feet in height may not enter restricted area 1.

(3) *45 to 53 feet.* Vessels at least 45 feet in height yet less than 53 feet in height may not enter restricted area 1 and must comply with the clearance procedures prescribed in paragraph (c) when navigating through restricted area 2.

(4) *53 to 63 feet.* Vessels at least 53 feet in height yet less than 63 feet in height may not enter restricted area 1, must comply with the clearance procedures prescribed in paragraph (c) of this section when navigating through restricted area 2, and may not dock in or enter restricted area 4 at any time.

(5) *63 to 95 feet.* Vessels at least 63 feet in height yet less than 95 feet in height may not enter restricted area 1, must comply with the clearance procedures prescribed in paragraph (c) of this section when navigating through restricted areas 2 or 3, and may not dock in or enter restricted areas 4 or 5 at any time.

(6) *95 feet or more.* Vessel 95 feet or more in height may not enter any restricted area, 1 through 6, at any time.

(c) *Clearance procedures.* Except during the times specified in paragraph

(d), operators of vessels subject to these procedures must do the following:

(1) Obtain clearance from the Burke Lakefront Air Traffic Control Tower before navigating through the restricted area(s);

(2) Navigate promptly through the area(s) at a safe and practical speed. Navigation at a safe and practical speed includes brief stops at the fueling dock inside restricted area 3 by vessels with masts between 63 and 95 feet in height; and

(3) Promptly inform the Burke Lakefront Air Traffic Control Tower after clearing the restricted area(s), or of any difficulty preventing prompt clearance. The Burke Lakefront Air Traffic Control Tower may be contacted on marine radio channel 14, or by telephone at (216) 781–6411 except as noted during the suspended hours listed in paragraph (d) of this section. The radio and telephone will be manned when the instrument guided approach system is being utilized.

(4) Clearance may also be obtained for longer periods or for groups of vessels when arranged in advance with Burke Lakefront Airport by any appropriate means of communication, including a prior written agreement.

(d) *Enforcement of clearance requirements*. The clearance procedures specified in paragraph (c) of this section will not be enforced during the following times:

(1) 11:00 p.m. n Fridays to 7:00 a.m. on Saturdays.

(2) 11:00 p.m. on Saturdays to 8:00 a.m. on Sundays.

(3) 12:00 midnight Sunday nights to 7:00 a.m. on Mondays.

(e) *Enforcement*. This section will not be enforced during any period in which the Federal Aviation Administration withdraws approval for operation of an instrument-only approach to runway 24 on the northeast end of Burke Lakefront Airport.

[CGD09–97–002, 64 FR 8006, Feb. 18, 1999]

§ 165.907 [Reserved]

§ 165.909 [Reserved]

§ 165.910 Security Zones; Captain of the Port Lake Michigan.

(a) *Security zones*. The following areas, defined by coordinates based upon North American Datum 1983, are security zones:

(1) *Jardine Water Filtration Plant*—(i) *Location*. All waters of Lake Michigan within the arc of a 100-yard radius with its center located on the north wall of Jardine Water Filtration Plant, approximate position 41°53′46″ N, 087°36′23″ W; (NAD 83)

(ii) *Regulations*. The Captain of the Port Lake Michigan will normally permit those U.S. Coast Guard certificated passenger vessels that normally load and unload passengers at Navy Pier to operate in the zone. However, should the Captain of the Port Lake Michigan determine it is appropriate, he will require even those U.S. Coast Guard certificated passenger vessels which normally load and unload passengers at Navy Pier to request permission before leaving or entering the security zones. The Captain of the Port Lake Michigan will notify these vessels via Broadcast Notice to Mariners if they must notify the Coast Guard before entering or transiting the security zone. As such, vessels that regularly operate within this zone are responsible for monitoring Broadcasts Notice to Mariners for the Chicago area. These broadcasts will be made by U.S. Coast Guard Sector Lake Michigan.

(2) *Dresden Nuclear Power Plant*. All waters of the Illinois River in the vicinity of Dresden Nuclear Power Plant encompassed by a line starting on the shoreline at 41°23′45″ N, 88°16′18″ W; then east to the shoreline at 41°23′39″ N, 88°16′09″ W; then following along the shoreline back to the beginning.

(3) *Donald C. Cook Nuclear Power Plant*. All waters of Lake Michigan around the Donald C. Cook Nuclear Power Plant encompassed by a line starting on the shoreline at 41°58.656′ N, 86°33.972′ W; then northwest to 41°58.769′ N, 86°34.525′ W; then southwest to 41°58.589′ N, 86°34.591′ W; then southeast to the shoreline at 41°58.476′ N, 86°34.038′

W; and following along the shoreline back to the beginning.

(4) *Palisades Nuclear Power Plant.* All waters of Lake Michigan around the Palisades Nuclear Power Plant within a line starting on the shoreline at 42°19′07″ N, 86°19′05″ W; then northwest to 42°19′22″ N, 86°19′54″ W; then north to 42°19′44″ N, 86°19′43″ W; then southeast back to the shoreline at 42°19′31″ N, 86°18′50″ W; then following along the shoreline back to the beginning.

(5) *Hammond Intake Crib.* All navigable waters bounded by the arc of a circle with a 100-yard radius with its center in approximate position 41°42′15″ N, 087°29′49″ W (NAD 83).

(6) *Zion Nuclear Power Plant.* All waters of Lake Michigan encompassed by a line starting on the shoreline at 42°26′36″ N, 87°48′03″ W; then southeast to 42°26′20″ N, 87°47′35″ W; then northeast to 42°26′53″ N, 87°47′22″ W; then northwest to the shoreline at 42°27′06″ N, 87°48′00″ W; then following along the shoreline back to the beginning.

(7) *68th Street Water Intake Crib.* All waters of Lake Michigan within the arc of a circle with a 100-yard radius of the 68th Street Crib with its center in approximate position 41°47′10″ N, 87°31′51″ W.

(8) *Dever Water Intake Crib.* All waters of Lake Michigan within the arc of a circle with a 100-yard radius of the Dever Crib with its center in approximate position 41°54′55″ N, 87°33′20″ W.

(9) *79th Street Water Intake Crib.* All waters of Lake Michigan within the arc of a circle with a 100-yard radius of the 79th Street Water Filtration Plant with its center in the approximate position 41°45′30″ N, 87°32′32″ W.

(10) *Wilson Avenue Intake Crib.* All waters of Lake Michigan within the arc of a circle with a 100-yard radius of the Wilson Avenue Crib with its center in approximate position 41°58′00″ N, 087°35′30″ W. (NAD83)

(11) *Four Mile Intake Crib.* All waters of Lake Michigan within the arc of a circle with a 100-yard radius of the Four Mile Crib with its center in approximate position 41°52′40″ N, 087°32′45″ W. (NAD83)

(b) *Regulations.* (1) Under §165.33, entry into these zones is prohibited unless authorized by the Coast Guard Captain of the Port Lake Michigan. Section 165.33 also contains other general requirements.

(2) All persons and vessels shall comply with the instruction of the Captain of the Port Lake Michigan or the designated on-scene U.S. Coast Guard patrol personnel. On-scene patrol personnel include commissioned, warrant, and petty officers of the U.S. Coast Guard on board Coast Guard, Coast Guard Auxiliary, local, state, and federal law enforcement vessels. Emergency response vessels are authorized to move within the zone but must abide by the restrictions imposed by the Captain of the Port.

(3) Persons who would like to transit through a security zone in this section must contact the Captain of the Port Lake Michigan at telephone number (414) 747–7182 or on VHF channel 16 (156.8 MHz) to seek permission to transit the area. If permission is granted, all persons and vessels shall comply with the instructions of the Captain of the Port Lake Michigan or his or her designated representative.

(c) *Authority.* In addition to 33 U.S.C. 1231 and 50 U.S.C. 191, the authority for this section includes 33 U.S.C. 1226.

[CGD09–02–001, 67 FR 53502, Aug. 16, 2002; 67 FR 65041, Oct. 23, 2002, as amended by CGD09–04–020, 69 FR 71709, Dec. 10, 2004; USCG–2011–0489, 76 FR 63204, Oct. 12, 2011; 76 FR 79537, Dec. 22, 2011]

§ 165.911 Security Zones; Captain of the Port Buffalo Zone.

(a) *Location.* The following are security zones:

(1) *Nine Mile Point and Fitzpatrick Nuclear Power Plants.* The navigable waters of Lake Ontario bounded by the following coordinates: commencing at 43°30.8′ N, 076°25.7′ W; then north to 43°31.2′ N, 076°25.7′ W; then east-northeast to 43°31.6′ N, 076°24.9′ W; then east to 43°31.8′ N, 076°23.2′ W; then south to 43°31.5′ N, 076°23.2′ W; and then following the shoreline back to the point of origin (NAD 83).

(2) *Ginna Nuclear Power Plant.* The waters of Lake Ontario bounded by the following area, starting at 43°16.9′ N, 077°18.9′ W; then north to 43°17.3′ N, 077°18.9′ W; then east to 43°17.3′ N, 077°18.3′ W; then south to 43°16.7′ N, 077°18.3′ W; then following the shoreline back to starting point (NAD 83).

(3) *Moses-Saunders Power Dam.* The waters of the St. Lawrence River bounded by the following area, starting at 45°00.73′ N, 074°47.85′ W; southeast following the international border to 45°00.25′ N, 074°47.56′ W; then southwest to 45°00.16′ N, 074°47.76′ W; then east to the shoreline at 45°00.16′ N, 074°47.93′ W; then northwest to 45°00.36′ N, 074°48.16′ W; then northeast back to the starting point (NAD 83).

(4) *Long Sault Spillway Dam.* The waters of the St. Lawrence River bounded by the following area, starting at 44°59.5′ N, 074°52.0′ W; north to 45°00.0′ N, 074°52.0′ W; east to 45°00.0′ N, 074°51.6′ W, then south to 44°59.5′ N, 074°51.6′ W; then west back to the starting point (NAD 83).

(b) *Regulations.* (1) In accordance with § 165.33, entry into this zone is prohibited unless authorized by the Coast Guard Captain of the Port Buffalo.

(2) Persons or vessels desiring to transit the area of the Nine Mile Point and Fitzpatrick Nuclear Power Plants or Ginna Nuclear Power Plant security zones must contact the Captain of Port Buffalo at telephone number (716) 843–9570, or on VHF/FM channel 16 to seek permission to transit the area. Persons desiring to transit the area of Moses-Saunders Power Dam or Long Sault Spillway Dam security zones must contact the Supervisor, Marine Safety Detachment Massena at telephone number (315) 769–5483, or on VHF/FM channel 16 to seek permission to transit the area. If permission is granted, all persons and vessels shall comply with the instructions of the Captain of the Port or his or her designated representative.

(c) *Authority.* In addition to 33 U.S.C. 1231 and 50 U.S.C. 191, the authority for this section includes 33 U.S.C. 1226.

[CGD09–02–005, 67 FR 53500, Aug. 16, 2002, as amended by USCG–2010–0821, 75 FR 61100, Oct. 4, 2010]

§ 165.912 Security Zone; Lake Erie, Perry, OH.

(a) *Location:* The following area is a security zone: all navigable waters of Lake Erie bounded by a line drawn between the following coordinates beginning at 41°48.187′ N, 081°08.818′ W; then due north to 41°48.7′ N, 081°08.818′ W; then due east to 41°48.7′ N, 081°08.455′ W; then due south to the south shore of Lake Erie at 41°48.231′ N, 081°08.455′ W; thence westerly following the shoreline back to the beginning (NAD 83).

(b) *Regulations.* In accordance with the general regulations in § 165.33 of this part, entry into this zone is prohibited unless authorized by the Coast Guard Captain of the Port Cleveland, or the designated on-scene representative.

(c) *Authority.* In addition to 33 U.S.C. 1231 and 50 U.S.C. 191, the authority for this section includes 33 U.S.C. 1226.

[CGD09–02–006, 67 FR 52611, Aug. 13, 2002]

§ 165.914 [Reserved]

§ 165.915 Security zones; Captain of the Port Detroit.

(a) *Security zones.* The following areas are security zones:

(1) *Enrico Fermi 2 Nuclear Power Station.* All waters and adjacent shoreline encompassed by a line commencing at 41°58.4′ N, 083°15.4′ W; then northeast to 41°58.5′ N, 083°15.0′ W; then southeast to 41°58.2′ N, 083°13.7′ W; then south to 41°56.9′ N, 083°13.8′ W; then west to 41°56.9′ N, 083°15.2′ W; then back to the starting point at 41°58.4′ N, 083°15.4′ W (NAD 83).

(2) *Davis Besse Nuclear Power Station.* All waters and adjacent shoreline encompassed by a line commencing at 41°36.1′ N, 083°04.7′ W; north to 41°37.0′ N, 083°03.9′ W; east to 41°35.9′ N, 083°02.5′ W; southwest to 41°35.4′ N, 083°03.7′ W; then back to the starting point 41°36.1′ N, 083°04.7′ W (NAD 83).

(3) *North American International Auto Show, Detroit River, Detroit, MI.* All waters of the Detroit River encompassed by a line beginning at a point of origin on land adjacent to the west end of Joe Lewis Arena at 42°19.44′ N, 083°03.11′ W; then extending offshore approximately 150 yards to 42°19.39′ N, 083°03.07′ W; then proceeding upriver approximately 2000 yards to a point at 42°19.72′ N, 083°01.88′ W; then proceeding onshore to a point on land adjacent to the Tricentennial State Park at 42°19.79′ N, 083°01.90′ W; then proceeding downriver along the shoreline to connect back to the point of origin on land adjacent to the west end of the Joe Louis Arena (NAD 83). This security zone will be enforced for two weeks in the month of January with the exact

dates and times to be published annually via a Notice of Enforcement.

(b) *Regulations.* (1) In accordance with § 165.33, entry into this zone is prohibited unless authorized by the Coast Guard Captain of the Port Detroit. Section 165.33 also contains other general requirements.

(2) Persons desiring to transit through either of these security zones, prior to transiting, must contact the Captain of the Port Detroit at telephone number (419) 418–6050, or on VHF/FM channel 16 and request permission. If permission is granted, all persons and vessels shall comply with the instructions of the Captain of the Port or his or her designated representative.

(c) *Authority.* In addition to 33 U.S.C. 1231 and 50 U.S.C. 191, the authority for this section includes 33 U.S.C. 1226.

[CGD09–02–011, 67 FR 46386, July 15, 2002, as amended by USCG–2013–0034, 79 FR 4079, Jan. 24, 2014]

§ 165.916 Security Zones; Captain of the Port Milwaukee Zone, Lake Michigan.

(a) *Location.* The following are security zones:

(1) *Kewaunee Nuclear Power Plant.* All navigable waters of Western Lake Michigan encompassed by a line commencing from a point on the shoreline at 44°20.715′ N, 087°32.080′ W; then easterly to 44°20.720′ N, 087°31.630′ W; then southerly to 44°20.480′ N, 087°31.630′ W; then westerly to 44°20.480′ N, 087°31.970′ W, then northerly following the shoreline back to the point of origin (NAD 83).

(2) *Point Beach.* All navigable waters of Western Lake Michigan encompassed by a line commencing from a point on the shoreline at 44°17.06 N, 087°32.15 W, then northeasterly to 44°17.12 N, 087°31.59 W, then southeasterly to 44°16.48 N, 087°31.42 W, then southwesterly to 44°16.42 N, 087°32.02 W, then northwesterly along the shoreline back to the point of origin. All coordinates are based upon North American Datum 1983.

(b) *Regulations.* (1) In accordance with § 165.33, entry into this zone is prohibited unless authorized by the Coast Guard Captain of the Port Milwaukee. Section 165.33 also contains other general requirements.

(2) Persons desiring to transit the area of the security zone may contact the Captain of the Port at telephone number (414) 747–7155 or on VHF-FM Channel 16 to seek permission to transit the area. If permission is granted, all persons and vessels shall comply with the instructions of the Captain of the Port or his or her designated representative.

(c) *Authority.* In addition to 33 U.S.C. 1231 and 50 U.S.C. 191, the authority for this section includes 33 U.S.C. 1226.

[CGD09–02–007, 67 FR 49578, July 31, 2002, as amended by CGD09–03–277, 69 FR 4242, Jan. 29, 2004]

§ 165.918 Safety Zones; Annual events requiring safety zones in the Captain of the Port Sault Sainte Marie zone.

(a) *Safety zones.* The following areas are designated safety zones:

(1) *Marquette Fourth of July Celebration Fireworks; Marquette, MI:*

(i) *Location.* All U.S. navigable waters of Marquette Harbor within a 1000-foot radius of the fireworks launch site, centered approximately 1250 feet south of the Mattson Park Bulkhead Dock and 450 feet east of Ripley Rock, at position 46°32′21.7″ N, 087°23′07.60″ W [DATUM: NAD 83].

(ii) *Enforcement period.* This safety zone will be enforced each year on July 4 from 9 p.m. until 11 p.m. If the July 4 fireworks are cancelled due to inclement weather, then this section will be enforced July 5 from 9 p.m. until 11 p.m.

(2) *Munising Fourth of July Celebration Fireworks; Munising, MI:*

(i) *Location.* All U.S. navigable waters of South Bay within a 600-foot radius from the fireworks launch site at the end of the Munising City Dock, centered in position: 46°24′50.08″ N, 086°39′08.52″ W [DATUM: NAD 83].

(ii) *Enforcement period.* This safety zone will be enforced each year on July 4 from 9 p.m. until 12:30 a.m. on July 5. If the July 4 fireworks are cancelled due to inclement weather, then this section will be enforced on July 5 from 9 p.m. until 12:30 a.m. on July 6.

(3) *Grand Marais Splash-In; Grand Marais, MI:*

(i) *Location.* All U.S. navigable waters within the southern portion of West

Bay bound to the north by a line beginning approximately 175 feet south-southeast of the Lake Street Boat Launch, extending 5280 feet to the east on a true bearing of 079 degrees. The eastern boundary will then be formed by a line drawn to the shoreline on a true bearing of 170 degrees. The western and southern boundaries of the zone will be bound by the shoreline of West Bay. The coordinates for this zone are as follows: 46°40′22.32″ N, 085°59′00.66″ W, 46°40′32.04″ N, 085°57′46.14″ W, and 46°40′19.68″ N, 085°57′43.08″ W [DATUM: NAD 83], with the West Bay shoreline forming the South and West boundaries of the zone.

(ii) *Enforcement period*. Each year on the second to last Saturday in June from 2 p.m. until 5 p.m.

(4) *Sault Sainte Marie Fourth of July Celebration Fireworks; Sault Sainte Marie, MI:*

(i) *Location*. All U.S. navigable waters of the St. Marys River within a 750-foot radius around the eastern portion of the U.S. Army Corp of Engineers Soo Locks North East Pier, centered in position: 46°30′19.66″ N, 084°20′31.61″ W [DATUM: NAD 83].

(ii) *Enforcement period*. This safety zone will be enforced each year on July 4 from 9 p.m. until 11:30 p.m. If the July 4 fireworks are cancelled due to inclement weather, then this section will be enforced July 5 from 9 p.m. until 11:30 p.m.

(5) *St. Ignace Fourth of July Celebration Fireworks; St. Ignace, MI:*

(i) *Location*. All U.S. navigable waters of East Moran Bay within a 700-foot radius from the fireworks launch site at the end of the Arnold Transit Mill Slip, centered in position: 45°52′24.62″ N, 084°43′18.13″ W [DATUM: NAD 83].

(ii) *Enforcement period*. This safety zone will be enforced each year on July 4 from 9 p.m. until 11:30 p.m. If the July 4 fireworks are cancelled due to inclement weather, then this section will be enforced July 5 from 9 p.m. until 11:30 p.m.

(6) *Mackinac Island Fourth of July Celebration Fireworks; Mackinac Island, MI:*

(i) *Location*. All U.S. navigable waters of Lake Huron within a 500-foot radius of the fireworks launch site, centered approximately 1000 yards west of Round Island Passage Light, at position 45°50′34.92″ N, 084°37′38.16″ W [DATUM: NAD 83].

(ii) *Enforcement period*. This safety zone will be enforced each year on July 4 from 9 p.m. until 11 p.m. If the July 4 fireworks are cancelled due to inclement weather, then this section will be enforced July 5 from 9 p.m. until 11 p.m.

(7) *Festivals of Fireworks Celebration Fireworks; St. Ignace, MI:*

(i) *Location*. All U.S. navigable waters of East Moran Bay within a 700-foot radius from the fireworks launch site at the end of the Arnold Transit Mill Slip, centered in position: 45°52′24.62″ N, 084°43′18.13″ W [DATUM: NAD 83].

(ii) *Enforcement period*. This safety zone will be enforced each year on every Saturday following the 4th of July until the second Sunday in September from 9 p.m. to 11 p.m. If the fireworks are cancelled on Saturday due to inclement weather, then this section will be enforced on Sunday from 9 p.m. to 11 p.m.

(8) *Canada Day Celebration Fireworks; Sault Sainte Marie, MI:*

(i) *Location*. All U.S. navigable waters of the St. Marys River within a 1200-foot radius from the fireworks launch site, centered approximately 160 yards north of the U.S. Army Corp of Engineers Soo Locks North East Pier, at position 46°30′20.40″ N, 084°20′17.64″ W [DATUM: NAD 83].

(ii) *Enforcement period*. This safety zone will be enforced each year on July 1 from 9 p.m. until 11 p.m. If the July 1 fireworks are cancelled due to inclement weather, then this section will be enforced July 2 from 9 p.m. until 11 p.m.

(9) *Jordan Valley Freedom Festival Fireworks; East Jordan, MI:*

(i) *Location*. All U.S. navigable waters of Lake Charlevoix, near the City of East Jordan, within the arc of a circle with a 1000-foot radius from the fireworks launch site in position 45°09′18″ N, 085°07′48″ W [DATUM: NAD 83].

(ii) *Enforcement period*. Each year on Saturday of the third weekend of June from 9 p.m. until 11 p.m.

(10) *National Cherry Festival Fourth of July Celebration Fireworks; Traverse City, MI:*

(i) Location. All U.S. navigable waters of the West Arm of Grand Traverse Bay within the arc of a circle with a 1000-foot radius from the fireworks launch site located on a barge in position 44°46′12″ N, 085°37′06″ W [DATUM: NAD 83].

(ii) *Enforcement period.* This safety zone will be enforced each year on July 4 from 9 p.m. until 11 p.m. If the July 4 fireworks are cancelled due to inclement weather, then this section will be enforced July 5 from 9 p.m. until 11 p.m.

(11) *Harbor Springs Fourth of July Celebration Fireworks; Harbor Springs, MI:*

(i) *Location.* All U.S. navigable waters of Lake Michigan and Harbor Springs Harbor within the arc of a circle with a 1000-foot radius from the fireworks launch site located on a barge in position 45°25′30″ N, 084°59′06″ W [DATUM: NAD 83].

(ii) *Enforcement period.* This safety zone will be enforced each year on July 4 from 9 p.m. until 11 p.m. If the July 4 fireworks are cancelled due to inclement weather, then this section will be enforced July 5 from 9 p.m. until 11 p.m.

(12) *Bay Harbor Yacht Club Fourth of July Celebration Fireworks; Petoskey, MI:*

(i) *Location.* All U.S. navigable waters of Lake Michigan and Bay Harbor Lake within the arc of a circle with a 500-foot radius from the fireworks launch site located on a barge in position 45°21′50″ N, 085°01′37″ W [DATUM: NAD 83].

(ii) *Enforcement period.* This safety zone will be enforced each year on July 3 from 9 p.m. until 11 p.m. If the July 3 fireworks are cancelled due to inclement weather, then this section will be enforced July 4 from 9 p.m. until 11 p.m.

(13) *Petoskey Fourth of July Celebration Fireworks; Petoskey, MI:*

(i) *Location.* All U.S. navigable waters of Lake Michigan and Petoskey Harbor, in the vicinity of Bay Front Park, within the arc of a circle with a 1000-foot radius from the fireworks launch site located in position 45°22′40″ N, 084°57′30″ W [DATUM: NAD 83].

(ii) *Enforcement period.* This safety zone will be enforced each year on July 4 from 9 p.m. until 11 p.m. If the July 4 fireworks are cancelled due to inclement weather, then this section will be enforced July 5 from 9 p.m. until 11 p.m.

(14) *Boyne City Fourth of July Celebration Fireworks; Boyne City, MI:*

(i) *Location.* All U.S. navigable waters of Lake Charlevoix, in the vicinity of Veterans Park, within the arc of a circle with a 1400-foot radius from the fireworks launch site located in position 45°13′30″ N, 085°01′40″ W [DATUM: NAD 83].

(ii) *Enforcement period.* This safety zone will be enforced each year on July 4 from 9 p.m. until 11 p.m. If the July 4 fireworks are cancelled due to inclement weather, then this section will be enforced July 5 from 9 p.m. until 11 p.m.

(15) *National Cherry Festival Air Show; Traverse City, MI:*

(i) *Location.* All U.S. navigable waters of the West Arm of Grand Traverse Bay bounded by a line drawn from 44°46′48″ N, 085°38′18″ W, then southeast to 44°46′30″ N, 085°35′30″ W, then southwest to 44°46′00″ N, 085°35′48″ W, then northwest to 44°46′30″ N, 085°38′30″ W, then back to the point of origin [DATUM: NAD 83].

(ii) *Enforcement period.* Each year on Friday, Saturday, and Sunday of the first complete weekend of July from noon until 4 p.m.

(16) *National Cherry Festival Finale Fireworks; Traverse City, MI:*

(i) *Location.* All U.S. navigable waters and adjacent shoreline of the West Arm of Grand Traverse Bay within the arc of a circle with a 1000-foot radius from the fireworks launch site located on a barge in position 44°46′12″ N, 085°37′06″ W [DATUM: NAD 83].

(ii) *Enforcement Period.* Each year on the second Saturday of July from 9 p.m. until 11 p.m.

(17) *Charlevoix Venetian Festival Friday Night Fireworks; Charlevoix, MI:*

(i) *Location.* All U.S. navigable waters of Lake Charlevoix, in the vicinity of Depot Beach, within the arc of a circle with a 1000-foot radius from the fireworks launch site located on a barge in position 45°19′08″ N, 085°14′18″ W [DATUM: NAD 83].

(ii) *Enforcement period.* Each year on Friday of the fourth weekend of July from 9 p.m. until 11 p.m.

(18) *Charlevoix Venetian Festival Saturday Night Fireworks; Charlevoix, MI:*

(i) *Location.* All U.S. navigable waters of Round Lake within the arc of a circle with a 300- foot radius from the fireworks launch site located on a barge in position 45°19′03″ N, 085°15′18″ W [DATUM: NAD 83].

(ii) *Enforcement period.* Each year on Saturday of the fourth weekend of July from 9 p.m. until 11 p.m.

(19) *Elk Rapids Harbor Days Fireworks; Elk Rapids, MI:*

(i) *Location.* All U.S. navigable waters of Grand Traverse Bay, in the vicinity of Edward G. Grace Memorial Park, within the arc of a circle with a 1000-foot radius from the fireworks launch site located in position 44°53′58″ N, 085°25′04″ W [DATUM: NAD 83].

(ii) *Enforcement period.* Each year on the first Saturday of August from 9 p.m. until 11 p.m.

(20) Alpena *Fourth of July Celebration Fireworks,* Alpena, MI:

(i) *Location.* All U.S. navigable waters of Lake Huron within an 800-foot radius of the fireworks launch site located near the end of Mason Street, South of State Avenue, at position 45°02′42″ N, 083°26′48″ W (NAD 83).

(ii) *Enforcement period.* This safety zone will be enforced each year on July 4 from 9 p.m. until 11 p.m. If the July 4 fireworks are cancelled due to inclement weather, then this section will be enforced July 5 from 9 p.m. until 11 p.m.

(b) *Definitions.* The following definitions apply to this section:

Designated representative means any Coast Guard commissioned, warrant, or petty officer designated by the Captain of the Port Sault Sainte Marie to monitor these safety zones, permit entry into these safety zones, give legally enforceable orders to persons or vessels within these safety zones, or take other actions authorized by the Captain of the Port Sault Sainte Marie.

Public vessel means a vessel owned, chartered, or operated by the United States or by a State or political subdivision thereof.

(c) *Regulations.* (1) In accordance with the general regulations in § 165.23 of this part, entry into, transiting, or anchoring within any of the safety zones listed in this section is prohibited unless authorized by the Captain of the Port Sault Sainte Marie, or a designated representative.

(2) All persons and vessels must comply with the instructions of the Coast Guard Captain of the Port Sault Sainte Marie or a designated representative. Upon being hailed by the U.S. Coast Guard by siren, radio, flashing light or other means, the operator of a vessel shall proceed as directed.

(3) When a safety zone established by this section is being enforced, all vessels must obtain permission from the Captain of the Port Sault Sainte Marie or a designated representative to enter, move within, or exit that safety zone. Vessels and persons granted permission to enter the safety zone shall obey all lawful orders or directions of the Captain of the Port Sault Sainte Marie or a designated representative. While within a safety zone, all vessels shall operate at the minimum speed necessary to maintain a safe course.

(d) *Suspension of enforcement.* If the event concludes earlier than scheduled, the Captain of the Port Sault Sainte Marie or a designated representative will issue a Broadcast Notice to Mariners notifying the public that enforcement of the respective safety zone is suspended.

(e) *Exemption.* Public vessels, as defined in paragraph (b) of this section, are exempt from the requirements in this section.

(f) *Waiver.* For any vessel, the Captain of the Port Sault Sainte Marie or a designated representative may, at his or her discretion, waive any of the requirements of this section, upon finding that circumstances are such that application of this section is unnecessary or impractical for the purposes of safety or environmental safety.

[USCG–2011–0188, 76 FR 31841, June 2, 2011]

§ 165.920 Regulated Navigation Area: USCG Station Port Huron, Port Huron, MI, Lake Huron.

(a) *Location.* All waters of Lake Huron encompassed by the following: starting at the northwest corner at 43°00.4′ N, 082°25.327′ W; then east to 43°00.4′ N, 082°25.23.8′ W; then south to 43°00.3′ N, 082°25.238′ W; then west to 43°00.3′ N, 082°25.327′ W; then following

the shoreline north back to the point of origin (NAD 83).

(b) *Special regulations.* No vessel may fish, anchor, or moor within the RNA without obtaining the approval of the Captain of the Port (COTP) Detroit. Vessels need not request permission from COTP Detroit if only transiting through the RNA. COTP Detroit can be reached by telephone at (313) 568–9560, or by writing to: Sector Detroit, 110 Mt. Elliot Ave., Detroit MI 48207–4380.

[CDG09–03–287, 69 FR 23103, Apr. 28, 2004, as amended by USCG–2012–0306, 77 FR 37315, June 21, 2012]

§ 165.921 Regulated Navigation Area; Reporting Requirements for Barges Loaded with Certain Dangerous Cargoes, Illinois Waterway System located within the Ninth Coast Guard District.

(a) *Regulated Navigation Area.* The following waters are a regulated navigation area (RNA): the Illinois Waterway System above mile 187.2 to the Chicago Lock on the Chicago River at mile 326.7 and to the confluence of the Calumet River and Lake Michigan at mile 333.5 of the Calumet River.

(b) *Applicability.* This section applies to towing vessel operators and fleeting area managers responsible for CDC barges in the RNA. This section does not apply to towing vessel operators responsible for barges not carrying CDC barges, or fleet tow boats moving one or more CDC barges within a fleeting area.

(c) *Definitions.* As used in this section—

Barge means a non-self propelled vessel engaged in commerce, as set out in 33 CFR 160.204.

Certain Dangerous Cargo or (*CDC*) includes any of the following:

(1) Division 1.1 or 1.2 explosives as defined in 49 CFR 173.50.

(2) Division 1.5D blasting agents for which a permit is required under 49 CFR 176.415 or, for which a permit is required as a condition of a Research and Special Programs Administration exemption.

(3) Division 2.3 ''poisonous gas'', as listed in 49 CFR 172.101 that is also a ''material poisonous by inhalation'' as defined in 49 CFR 171.8, and that is in a quantity in excess of 1 metric ton per barge.

(4) Division 5.1 oxidizing materials for which a permit is required under 49 CFR 176.415 or, for which a permit is required as a condition of a Research and Special Programs Administration exemption.

(5) A liquid material that has a primary or subsidiary classification of Division 6.1 ''poisonous material'' as listed in 49 CFR 172.101 that is also a ''material poisonous by inhalation'', as defined in 49 CFR 171.8 and that is in a bulk packaging, or that is in a quantity in excess of 20 metric tons per barge when not in a bulk packaging.

(6) Class 7, ''highway route controlled quantity'' radioactive material or ''fissile material, controlled shipment'', as defined in 49 CFR 173.403.

(7) Bulk liquefied chlorine gas and bulk liquefied gas cargo that is flammable and/or toxic and carried under 46 CFR 154.7.

(8) The following bulk liquids—

(i) Acetone cyanohydrin,

(ii) Allyl alcohol,

(iii) Chlorosulfonic acid,

(iv) Crotonaldehyde,

(v) Ethylene chlorohydrin,

(vi) Ethylene dibromide,

(vii) Methacrylonitrile,

(viii) Oleum (fuming sulfuric acid), and

(ix) Propylene Oxide.

CDC barge means a barge containing CDCs or CDC residue.

Downbound means the tow is traveling with the current.

Fleet tow boat means any size vessel that is used to move, transport, or deliver a CDC barge within a fleeting area.

Fleeting area means any fleet, including any facility, located within the area covered by one single port.

Inland River Vessel Movement Center or (*IRVMC*) means the Coast Guard office that is responsible for collecting the information required by this section.

Ninth Coast Guard District means the Coast Guard District as set out in 33 CFR 3.45–1.

Towing vessel means any size vessel that is used to move, transport, or deliver a CDC barge to a fleet or facility

that is located in a different port than where the voyage originated.

Towing vessel operator means the Captain or pilot who is on watch on board a towing vessel.

Upbound means the tow is traveling against the current.

(d) *Regulations.* The following must report to the Inland River Vessel Movement Center (IRVMC):

(1) The towing vessel operator responsible for one or more CDC barges in the RNA must report all the information items specified in table 165.921(f), in paragraph (f) of this section, to the IRVMC:

(i) Upon point of entry into the RNA with one or more CDC barges;

(ii) Four hours before originating a voyage within the RNA with one or more CDC barges, except if the evolution of making up a tow with a CDC barge will take less than 4 hours before originating a voyage, and the towing vessel operator did not receive the order to make up a tow with a CDC barge in advance of 4 hours before originating the voyage with one or more CDC barges, in which case the towing vessel operator shall submit the required report to the IRVMC as soon as possible after receiving orders to make up a tow with one or more CDC barges;

(iii) Upon dropping off one or more CDC barges at a fleeting area or facility;

(iv) Upon picking up one or more additional CDC barges from a fleeting area or facility;

(v) At designated reporting points, set forth in paragraph of this section;

(vi) When the estimated time of arrival (ETA) to a reporting point varies by 6 hours from the previously reported ETA;

(vii) Any significant deviation from previously reported information;

(viii) Upon departing the RNA with one or more CDC barges; and

(ix) When directed by the IRVMC.

(2) The fleeting area manager responsible for one or more CDC barges in the RNA must report all the information items specified in table 165.921(g), in paragraph (g) of this section, to the IRVMC:

(i) Once daily, report all CDC barges within the fleeting area;

(ii) Upon moving one or more CDC barges within a fleeting area by a fleet tow boat;

(iii) Any significant deviation from previously reported information; and

(iv) When directed by the IRVMC.

(3) Reports required by this section may be made by a company representative or dispatcher on behalf of the fleeting area manager.

(4) Reports required by this section must be made to the IRVMC either by telephone to (866) 442–6089, by fax to (866) 442–6107, or by e-mail to *irvmc@cgstl.uscg.mil*. A reporting form and e-mail link are available at *http://www.uscg.mil/d8/Divs/M/IRVMC.htm*.

(5) The general regulations contained in 33 CFR 165.13 apply to this section.

(e) *Ninth Coast Guard District Illinois Waterway System RNA Reporting points.* Towing vessel operators responsible for one or more CDC barges in the RNA must make reports to the Inland River Vessel Movement Center at each point listed in this paragraph (e).

(1) Illinois River (ILR) Upbound, at Mile Markers (M) and when Departing Lock & Dam (L&D)—

(i) M 187.2 (Southern Boundary MSU Chicago AOR),

(ii) M 303.5 Junction of Chicago Sanitary Ship Canal and Calumet-Sag Channel,

(iii) M 326.4 Thomas S. O'Brien L&D, Calumet River,

(iv) M 333.5 Confluence of Calumet River and Lake Michigan, and

(v) M 326.7 Chicago L&D, Chicago River.

(2) Illinois River (ILR) Downbound Reporting Points, at Mile Markers (M) and when Departing Lock & Dam (L&D)—

(i) M 326.7 Chicago L&D, Chicago River,

(ii) M 333.5 Confluence of Calumet River and Lake Michigan,

(iii) M 326.4 Thomas S. O'Brien L&D, Calumet River,

(iv) M 303.5 Junction of Chicago Sanitary Ship Canal and Calumet-Sag Channel, and

(v) M 187.2 (Southern Boundary MSU Chicago AOR).

(f) *Information to be reported to the IRVMC by towing vessel operators.* With the exception noted in paragraph (d)(1)(ii) of this section, towing vessel

operators responsible for one or more CDC barges in the RNA must report all the information required by this section as set out in table 165.921(f) of this paragraph.

TABLE 165.921(f)—INFORMATION TO BE REPORTED TO THE IRVMC BY TOWING VESSEL OPERATORS

	24-hour contact number	Name of vessel moving barge(s)	Barge(s) name and official number	Type, name and amount of CDC onboard	Estimated time of departure from fleeting area or facility	Name and location of destination of CDC barge (fleeting area or facility), including estimated time of arrival	Reporting point	Estimated time of arrival (ETA) to next reporting point (If applicable)
(1) Upon point of entry into the RNA with a CDC barge	X	X	X	X	.....	X	X	X
(2) 4 hours before originating a voyage within the RNA with one or more CDC barges; but see exception in paragraph (d)(1)(ii) of this section.	X	X	X	X	X	X	.....	X
(3) Upon dropping off one or more CDC barges at a fleeting area or facility	.....	X	X					
(4) Upon picking up one or more additional CDC barges from a fleeting area or facility.	.....	X	X	X				
(5) At designated reporting points in 165.921(e)	.....	X	X	(1)	.....	(1)	X	X
(6) When ETA to a reporting point varies by 6 hours from previously reported ETA	.....	X	(1)	(1)	.....	.....	.....	X
(7) Any significant deviation from previously reported information (all that apply)	X	X	X	X	X	X	X	X
(8) Upon departing the RNA with a CDC barge (s)	.....	X	X	.....	.....	.....	X	
(9) When directed by the IRVMC	X	X	X	X	X	X	X	X

[1] If changed.

(g) *Information to be reported to the IRVMC by fleeting area managers.* Fleeting area managers responsible for one or more CDC barges in the RNA must report the information required by this section as set out in table 165.921(g) to this paragraph.

TABLE 165.921(g)—INFORMATION TO BE REPORTED TO THE IRVMC BY FLEETING AREA MANAGERS

	24-hour contact number	Barge(s) name and official number	Type, name and amount of CDC onboard	Location of CDC barge (fleeting area or facility)
(1) Once daily, all CDC barges in a fleeting area	X	X	X	X
(2) Upon moving one or more CDC barges within a fleeting area by a fleet tow boat		X	X	X
(3) Any significant deviation from previously reported information (all that apply)	X	X	X	X
(4) When directed by the IRVMC	X	X	X	X

(h) *Alternative reporting.* The Ninth Coast Guard District Commander may consider and approve alternative methods to be used by a reporting party to meet any reporting requirements if—

(1) The request is submitted in writing to Commander, Ninth Coast Guard District (m), 1240 E. Ninth Street, Cleveland, Ohio, 44199–2060; and

(2) The alternative provides an equivalent level of the reporting that which would be achieved by the Coast Guard with the required check-in points.

(i) Deviation from this section is prohibited unless specifically authorized by the Commander, Ninth Coast Guard District or the IRVMC.

(Approved by the Office of Management and Budget under OMB control number 1625–1505)

[CDG09–03–241, 68 FR 57622, Oct. 6, 2003]

EFFECTIVE DATE NOTE: By USCG–2013–0849, 78 FR 61185, Oct. 3, 2013, § 165.921 was amended by staying paragraphs (d), (e), (f), (g), and (h), effective from Oct. 3, 2013 until Dec. 31, 2015.

§ 165.923 Safety Zone and Regulated Navigation Area, Chicago Sanitary and Ship Canal, Romeoville, IL.

(a) *Safety Zone.* (1) The following area is a safety zone: All waters of the *Chicago Sanitary and Ship Canal* located between mile marker 296.1 and mile marker 296.7.

(2) *Regulations.* (i) All vessels are prohibited from transiting the safety zone with any non-potable water on board if they intend to release that water in any form within, or on the other side of the safety zone. Non-potable water includes, but is not limited to, any water taken on board to control or maintain trim, draft, stability, or stresses of the vessel. Likewise, it includes any water taken on board due to free communication between the hull of the vessel and exterior water. Potable water is water treated and stored aboard the vessel that is suitable for human consumption.

(ii) Vessels with non-potable water onboard are permitted to transit the safety zone if they have taken steps to prevent the release, in any form, of that water in or on the other side of the safety zone. Alternatively, vessels with non-potable water onboard are permitted to transit the safety zone if they have plans to dispose of the water in a biologically sound manner.

(iii) Vessels with non-potable water aboard that intend to discharge on the other side of the zone must contact the Coast Guard's Ninth District Commander or his or her designated representatives prior to transit and obtain permission to transit and discharge. Examples of discharges that may be approved include plans to dispose of the water in a biologically sound manner or demonstrate through testing that the non-potable water does not contain potential live Silver or Asian carp, viable eggs, or gametes.

(iv) In accordance with the general regulations in § 165.23 of this part, entry into, transiting, or anchoring within this safety zone by vessels with non-potable water on board is prohibited unless authorized by the Coast Guard's Ninth District Commander, his or her designated representatives, or an on-scene representative.

(v) The Captain of the Port, Sector Lake Michigan, may further designate an ''on-scene'' representative. The Captain of the Port, Sector Lake Michigan, or the on-scene representative may be contacted via VHF–FM radio Channel 16 or through the Coast Guard Sector Lake Michigan Command Center at (414) 747–7182.

(b) *Regulated Navigation Area.* (1) The following is a regulated navigation area (RNA): all waters of the Chicago Sanitary and Ship Canal, Romeoville, IL located between mile marker 295.5 and mile marker 297.2.

(2) *Regulations.* (i) The general regulations contained in 33 CFR 165.13 apply.

(ii) Vessels that comply with the following restrictions are permitted to transit the RNA:

(A) Vessels must be greater than 20 feet in length.

(B) Vessels must not be a personal or human powered watercraft (*i.e.* jet skis, wave runners, kayaks, row boats, etc.).

(C) All up-bound and down-bound barge tows that consist of barges carrying flammable liquid cargos (Grade A through C, flashpoint below 140 degrees Fahrenheit, or heated to within 15 degrees Fahrenheit of flash point) must engage the services of a bow boat at all times until the entire tow is clear of the RNA.

(D) Vessels engaged in commercial service, as defined in 46 U.S.C. 2101(5), may not pass (meet or overtake) in the RNA and must make a SECURITE call when approaching the RNA to announce intentions and work out passing arrangements.

(E) Commercial tows transiting the RNA must be made up with only wire rope to ensure electrical connectivity between all segments of the tow.

(F) All vessels are prohibited from loitering in the RNA.

(G) Vessels may enter the RNA for the sole purpose of transiting to the other side and must maintain headway throughout the transit. All vessels and persons are prohibited from dredging, laying cable, dragging, fishing, conducting salvage operations, or any other activity, which could disturb the bottom of the RNA.

(H) Except for law enforcement and emergency response personnel, all personnel on vessels transiting the RNA should remain inside the cabin, or as inboard as practicable. If personnel must be on open decks, they must wear a Coast Guard approved personal flotation device.

(I) Vessels may not moor or lay up on the right or left descending banks of the RNA.

(J) Towboats may not make or break tows if any portion of the towboat or tow is located in the RNA.

(K) Persons on board any vessel transiting this RNA in accordance with this rule or otherwise are advised they do so at their own risk.

(c) *Definitions.* The following definitions apply to this section:

Bow boat means a towing vessel capable of providing positive control of the bow of a tow containing one or more barges, while transiting the RNA. The bow boat must be capable of preventing a tow containing one or more barges from coming into contact with the shore and other moored vessels.

Designated representative means the Captain of the Port Lake Michigan and Commanding Officer, Marine Safety Unit Chicago.

On-scene representative means any Coast Guard commissioned, warrant or petty officer who has been designated by the Captain of the Port, Sector Lake Michigan, to act on his or her behalf. The on-scene representative of the Captain of the Port, Sector Lake Michigan, will be aboard a Coast Guard, Coast Guard Auxiliary, or other designated vessel or will be on shore and will communicate with vessels via VHF–FM radio or loudhailer.

Vessel means every description of watercraft or other artificial contrivance used, or capable or being used, as a means of transportation on water. This definition includes, but is not limited to, barges.

(d) *Compliance.* All persons and vessels must comply with this section and any additional instructions or orders of the Coast Guard's Ninth District Commander or his or her designated representatives. Any person on board any vessel transiting this RNA in accordance with this rule or otherwise does so at his or her own risk.

(e) *Waiver.* For any vessel, the Coast Guard's Ninth Coast Commander or his

or her designated representatives may waive any of the requirements of this section, upon finding that operational conditions or other circumstances are such that application of this section is unnecessary or impractical for the purposes of vessel and mariner safety.

[USCG–2011–1108, 76 FR 77124, Dec. 12, 2011, as amended at 78 FR 42015, July 15, 2013]

§ 165.927 Safety Zone; St. Louis River, Duluth/Interlake Tar Remediation Site, Duluth, MN.

(a) *Location:* The following area is a safety zone: All waters of Stryker Bay and Hallett Slips 6 & 7 which are located north of a boundary line delineated by the following points: From the shoreline at 46°43′10.00″ N, 092°10′31.66″ W, then south to 46°43′06.24″ N, 092°10′31.66″ W, then east to 46°43′06.24″ N, 092°09′41.76″ W, then north to the shoreline at 46°43′10.04″ N, 092°09′41.76″ W. [Datum NAD 83].

(b) *Regulations.* (1) In accordance with the general regulations in § 165.23 of this part, entry into, transiting, or anchoring within this safety zone is prohibited unless authorized by the Captain of the Port Duluth, or his designated on-scene representative.

(2) This safety zone is closed to all vessel traffic, except as may be permitted by the Captain of the Port Duluth or his designated on-scene representative.

(3) The ''designated on-scene representative'' of the Captain of the Port is any Coast Guard commissioned, warrant or petty officer who has been designated by the Captain of the Port to act on his behalf. The on-scene representative of the Captain of the Port will be aboard either a Coast Guard or Coast Guard Auxiliary vessel. The Captain of the Port or his designated on-scene representative may be contacted by calling Coast Guard Marine Safety Unit Duluth at (218) 720–5286.

(4) Vessel operators desiring to enter or operate within the safety zone shall contact the Captain of the Port Duluth to obtain permission to do so. Vessel operators given permission to enter or operate in the safety zone shall comply with all directions given to them by the Captain of the Port Duluth or his on-scene representative.

[CGD09–06–122, 71 FR 66112, Nov. 13, 2006]

§ 165.928 Security Zone; Mackinac Bridge, Straits of Mackinac, Michigan.

(a) *Definitions.* The following definitions apply to this section:

(1) *Designated Representative* means those persons designated by the Captain of the Port to monitor these security zones, permit entry into these zones, give legally enforceable orders to persons or vessels within these zones and take other actions authorized by the Captain of the Port. Persons authorized in paragraph (e) to enforce this section and Vessel Traffic Service St. Marys River (VTS) are Designated Representatives.

(2) *Federal Law Enforcement Officer* means any employee or agent of the United States government who has the authority to carry firearms and make warrantless arrests and whose duties involve the enforcement of criminal laws of the United States.

(3) *Navigable waters of the United States* means those waters defined as such in 33 CFR part 2.

(4) *Public vessel* means vessels owned, chartered, or operated by the United States, or by a State or political subdivision thereof.

(5) *Michigan Law Enforcement Officer* means any regularly employed member of a Michigan police force responsible for the prevention and detection of crime and the enforcement of the general criminal laws of Michigan as defined in Michigan Compiled Laws section 28.602(l)(i).

(b) *Security zone.* The following area is a security zone: All waters enclosed by a line connecting the following points: 45°50.763 N: 084°43.731 W, which is the northwest corner; thence east to 45°50.705 N: 084°43.04 W, which is the northeast corner; thence south to 45°47.242 N: 084°43.634 W, which is the southeast corner; thence west to 45°47.30 N: 084°44.320 W, which is the southwest corner; then north to the point of origin. The zone described above includes all waters on either side of the Mackinac Bridge within one-quarter mile of the bridge. [Datum: NAD 1983].

(c) *Obtaining permission to enter or move within, the security zone:* All vessels must obtain permission from the COTP or a Designated Representative

to enter or move within, the security zone established in this section. Vessels with an operable Automatic Identification System (AIS) unit should seek permission from the COTP or a Designated Representative at least 1 hour in advance. Vessels with an operable AIS unit may contact VTS St. Marys River (Soo Traffic) on VHF channel 12. Vessels without an operable AIS unit should seek permission at least 30 minutes in advance. Vessels without an operable AIS unit may contact Coast Guard Station St. Ignace on VHF channel 16.

(d) *Regulations*. The general regulations in 33 CFR part 165 subpart D, apply to any vessel or person in the navigable waters of the United States to which this section applies. No person or vessel may enter the security zone established in this section unless authorized by the Captain of the Port or his designated representatives. Vessels and persons granted permission to enter the security zone shall obey all lawful orders or directions of the Captain of the Port or his designated representatives. All vessels entering or moving within the security zone must operate at speeds which are necessary to maintain a safe course and which will not exceed 12 knots.

(e) *Enforcement*. Any Coast Guard commissioned, warrant or petty officer may enforce the rules in this section. In the navigable waters of the United States to which this section applies, when immediate action is required and representatives of the Coast Guard are not present or not present in sufficient force to provide effective enforcement of this section, any Federal Law Enforcement Officer or Michigan Law Enforcement Officer may enforce the rules contained in this section pursuant to 33 CFR 6.04–11. In addition, the Captain of the Port may be assisted by other Federal, state or local agencies in enforcing this section pursuant to 33 CFR 6.04–11.

(f) *Exemption*. Public vessels as defined in paragraph (a) of this section are exempt from the requirements in this section.

(g) *Waiver*. For any vessel, the Captain of the Port Sault Ste. Marie may waive any of the requirements of this section, upon finding that operational conditions or other circumstances are such that application of this section is unnecessary or impractical for the purpose of port security, safety or environmental safety.

(h) *Enforcement period*. This rule will be enforced Labor Day of each year; 6 a.m. (local) to 11:59 p.m. (midnight) (local).

[CGD09–06–019, 71 FR 45389, Aug. 9, 2006]

§ 165.929 Safety Zones; Annual events requiring safety zones in the Captain of the Port Lake Michigan zone.

(a) *Regulations*. The following regulations apply to the safety zones listed in Table 165.929 of this section.

(1) The general regulations in 33 CFR 165.23.

(2) All vessels must obtain permission from the Captain of the Port Lake Michigan or his or her designated representative to enter, move within, or exit a safety zone established in this section when the safety zone is enforced. Vessels and persons granted permission to enter one of the safety zones listed in this section must obey all lawful orders or directions of the Captain of the Port Lake Michigan or his or her designated representative. Upon being hailed by the U.S. Coast Guard by siren, radio, flashing light or other means, the operator of a vessel must proceed as directed.

(3) The enforcement dates and times for each of the safety zones listed in Table 165.929 are subject to change, but the duration of enforcement would remain the same or nearly the same total number of hours as stated in the table. In the event of a change, the Captain of the Port Lake Michigan will provide notice to the public by publishing a Notice of Enforcement in the FEDERAL REGISTER, as well as, issuing a Broadcast Notice to Mariners.

(b) *Definitions*. The following definitions apply to this section:

(1) *Designated representative* means any Coast Guard commissioned, warrant, or petty officer designated by the Captain of the Port Lake Michigan to monitor a safety zone, permit entry

into a zone, give legally enforceable orders to persons or vessels within a safety zone, and take other actions authorized by the Captain of the Port Lake Michigan.

(2) *Public vessel* means a vessel that is owned, chartered, or operated by the United States, or by a State or political subdivision thereof.

(3) *Rain date* refers to an alternate date and/or time in which the safety zone would be enforced in the event of inclement weather.

(c) *Suspension of enforcement*. The Captain of the Port Lake Michigan may suspend enforcement of any of these zones earlier than listed in this section. Should the Captain of the Port suspend any of these zones earlier than the listed duration in this section, he or she may make the public aware of this suspension by Broadcast Notice to Mariners and/or on-scene notice by his or her designated representative.

(d) *Exemption*. Public vessels, as defined in paragraph (b) of this section, are exempt from the requirements in this section.

(e) *Waiver*. For any vessel, the Captain of the Port Lake Michigan or his or her designated representative may waive any of the requirements of this section, upon finding that operational conditions or other circumstances are such that application of this section is unnecessary or impractical for the purposes of safety or security.

TABLE 165.929

Event	Location [1]	Enforcement date and time [2]
(a) March Safety Zones		
(1) St. Patrick's Day Fireworks	Manitowoc, WI. All waters of the Manitowoc River in Manitowoc, WI within the arc of a circle with a 200-foot radius from the fireworks launch site located in position 44°5′29.6″ N, 087°39′23.0″ W.	The third Saturday of March; 5:30 p.m. to 7 p.m.
(b) April Safety Zones		
(1) Michigan Aerospace Challenge Sport Rocket Launch.	Muskegon, MI. All waters of Muskegon Lake, near the West Michigan Dock and Market Corp facility, within the arc of a circle with a 1500-yard radius from the rocket launch site located in position 43°14′21″ N, 086°15′35″ W.	The last Saturday of April; 8 a.m. to 4 p.m.
(2) Lubbers Cup Regatta	Spring Lake, MI. All waters of Spring Lake in Spring Lake, Michigan in the vicinity of Keenan Marina within a rectangle that is approximately 6,300 by 300 feet. The rectangle will be bounded by points beginning at 43°04′55″ N, 086°12′32″ W; then east to 43°04′57″ N, 086°11′6″ W; then south to 43°04′55″ N, 086°11′5″ W; then west to 43°04′52″ N, 086°12′32″ W; then north back to the point of origin.	April 12; 8 a.m. to 6 p.m., and April 13; 8:40 a.m. to 12:30 p.m.
(c) May Safety Zones		
(1) Tulip Time Festival Fireworks.	Holland, MI. All waters of Lake Macatawa, near Kollen Park, within the arc of a circle with a 1000-foot radius from the fireworks launch site in position 42°47′23″ N, 086°07′22″ W.	The first Saturday of May; 9:30 p.m. to 11:30 p.m. Rain date: The first Friday of May; 9:30 p.m. to 11:30 p.m.
(2) Cochrane Cup	Blue Island, IL. All waters of the Calumet Saganashkee Channel from the South Halstead Street Bridge at 41°39′27″ N, 087°38′29″ W; to the Crawford Avenue Bridge at 41°39′05″ N, 087°43′08″ W; and the Little Calumet River from the Ashland Avenue Bridge at 41°39′7″ N, 087°39′38″ W; to the junction of the Calumet Saganashkee Channel at 41°39′23″ N, 087°39′00″ W.	The first Saturday of May; 6:30 a.m. to 5 p.m.
(3) Rockets for Schools Rocket Launch.	Sheboygan, WI. All waters of Lake Michigan and Sheboygan Harbor, near the Sheboygan South Pier, within the arc of a circle with a 1500-yard radius from the rocket launch site located with its center in position 43°44′55″ N, 087°41′52″ W.	The first Saturday of May; 8 a.m. to 5 p.m.
(4) Celebrate De Pere	De Pere, WI. All waters of the Fox River, near Voyageur Park, within the arc of a circle with a 500 foot radius from the fireworks launch site located in position 44°27′10″ N, 088°03′50″ W.	The Sunday before Memorial Day; 8:30 p.m. to 10 p.m.

TABLE 165.929—Continued

Event	Location [1]	Enforcement date and time [2]
(d) June Safety Zones		
(1) International Bayfest	Green Bay, WI. All waters of the Fox River, near the Western Lime Company 1.13 miles above the head of the Fox River, within the arc of a circle with a 1,000-foot radius from the fireworks launch site located in position 44°31′24″ N, 088°00′42″ W.	The second Friday of June; 9 p.m. to 11 p.m.
(2) Harborfest Music and Family Festival.	Racine, WI. All waters of Lake Michigan and Racine Harbor, near the Racine Launch Basin Entrance Light, within the arc of a circle with a 200-foot radius from the fireworks launch site located in position 42°43′43″ N, 087°46′40″ W.	Friday and Saturday of the third complete weekend of June; 9 p.m. to 11 p.m. each day.
(3) Spring Lake Heritage Festival Fireworks.	Spring Lake, MI. All waters of the Grand River within the arc of a circle with a 700-foot radius from a barge in position 43°04'22.5″ N, 086°12′24.07″ W.	The third Saturday of June; 9 p.m. to 11 p.m.
(4) Elberta Solstice Festival	Elberta, MI. All waters of Betsie Lake within the arc of a circle with a 500-foot radius from the fireworks launch site located in approximate position 44°37′36.5″ N 086°13′59.6″ W.	The last Saturday of June; 9 p.m. to 11 p.m.
(5) World War II Beach Invasion Re-enactment.	St. Joseph, MI. All waters of Lake Michigan in the vicinity of Tiscornia Park in St. Joseph, MI beginning at 42°06′55″ N, 086°29′23″ W; then west/northwest along the north breakwater to 42°06′59″ N, 086°29′41″ W; then northwest 100 yards to 42°07′01″ N, 086°29′44″ W; then northeast 2,243 yards to 42°07′50″ N, 086°28′43″ W; the southeast to the shoreline at 42°07′39″ N, 086°28′27″ W; then southwest along the shoreline to the point of origin.	The last Saturday of June; 8 a.m. to 2 p.m.
(6) Ephraim Fireworks	Ephraim, WI. All waters of Eagle Harbor and Lake Michigan within the arc of a circle with a 750-foot radius from the fireworks launch site located on a barge in position 45°09′18″ N, 087°10′51″ W.	The third Saturday of June; 9 p.m. to 11 p.m.
(7) Thunder on the Fox	Elgin, IL. All waters of the Fox River, near Elgin, Illinois, between Owasco Avenue, located at approximate position 42°03′06″ N, 088°17′28″ W and the Kimball Street bridge, located at approximate position 42°02′31″ N, 088°17′22″ W.	Friday, Saturday, and Sunday of the third weekend in June; 10 a.m. to 7 p.m. each day.
(8) Olde Ellison Bay Days Fireworks.	Ellison Bay, WI. All waters of Lake Michigan, in the vicinity of Ellison Bay Wisconsin, within a 400-foot radius from the fireworks launch site located on a barge in position 45°15′36″ N, 087°05′03″ W.	The fourth Saturday of June; 9 p.m. to 10 p.m.
(9) Sheboygan Harborfest Fireworks.	Sheboygan, WI. All waters of Lake Michigan and Sheboygan Harbor within the arc of a circle with a 1000-foot radius from the fireworks launch site located in position 43°44′55″ N, 087°41′54.8″ W.	June 15; 8:45 p.m. to 10:45 p.m.
(e) July Safety Zones		
(1) Town of Porter Fireworks Display.	Porter IN. All waters of Lake Michigan within the arc of a circle with a 1000 foot radius from the fireworks launch site located in position 41°39′56″ N, 087°03′57″ W.	The first Saturday of July; 8:45 p.m. to 9:30 p.m.
(2) City of Menasha 4th of July Fireworks.	Menasha, WI. All waters of Lake Winnebago and the Fox River within an 800-foot radius from the fireworks launch site located in position 44°12′14″ N, 088°25′31.4″ W.	July 4; 9 p.m. to 10:30 p.m.
(3) Pentwater July Third Fireworks.	Pentwater, MI. All waters of Lake Michigan and the Pentwater Channel within the arc of a circle with a 1,000-foot radius from the fireworks launch site located in position 43°46′57″ N, 086°26′38″ W.	July 3; 9 p.m. to 11 p.m. Rain date: July 4; 9 p.m. to 11 p.m.
(4) Taste of Chicago Fireworks	Chicago, IL. All waters of Monroe Harbor and Lake Michigan bounded by a line drawn from 41°53′24″ N, 087°35′59″ W; then east to 41°53′15″ N, 087°35′26″ W; then south to 41°52′49″ N, 087°35′26″ W; then southwest to 41°52′27″ N, 087°36′37″ W; then north to 41°53′15″ N, 087°36′33″ W; then east returning to the point of origin.	July 3; 9 p.m. to 11 p.m. Rain date: July 4; 9 p.m. to 11 p.m.
(5) St. Joseph Fourth of July Fireworks.	St. Joseph, MI. All waters of Lake Michigan and the St. Joseph River within the arc of a circle with a 1000-foot radius from the fireworks launch site in position 42°06′52″ N, 086°29′28.2″ W.	July 4; 9 p.m. to 11 p.m. Rain date: July 5; 9 p.m. to 11 p.m.
(6) US Bank Fireworks	Milwaukee, WI. All waters and adjacent shoreline of Milwaukee Harbor, in the vicinity of Veteran's park, within the arc of a circle with a 1,200-foot radius from the center of the fireworks launch site which is located on a barge in approximate position 43°02′22″ N, 087°53′29″ W.	July 3; 9 p.m. to 11 p.m. Rain date: July 4; 9 p.m. to 11 p.m.

TABLE 165.929—Continued

Event	Location [1]	Enforcement date and time [2]
(7) Manistee Independence Day Fireworks.	Manistee, MI. All waters of Lake Michigan, in the vicinity of the First Street Beach, within the arc of a circle with a 1,000-foot radius from the fireworks launch site located in position 44°14′51″ N, 086°20′46″ W.	July 3; 9 p.m. to 11 p.m. Rain date: July 4; 9 p.m. to 11 p.m.
(8) Frankfort Independence Day Fireworks.	Frankfort, MI. All waters of Lake Michigan and Frankfort Harbor, bounded by a line drawn from 44°38′06″ N, 086°14′50″ W; then south to 44°37′37″ N, 086°14′48″ W; then west to 44°37′37″ N, 086°15′16″ W; then north to 44°38′06″ N, 086°15′16″ W.	July 4; 9 p.m. to 11 p.m. Rain date: July 5; 9 p.m. to 11 p.m.
(9) Freedom Festival Fireworks	Ludington, MI. All waters of Lake Michigan and Ludington Harbor within the arc of a circle with a 800-foot radius from the fireworks launch site located in position 43°57′10.3″ N, 086°27′43.0″ W.	July 4; 9 p.m. to 11 p.m. Rain date: July 5; 9 p.m. to 11 p.m.
(10) White Lake Independence Day Fireworks.	Montague, MI. All waters of White Lake, in the vicinity of the Montague boat launch, within the arc of a circle with a 1000-foot radius from the fireworks launch site located in position 43°24′33″ N, 086°21′28″ W.	July 4; 9 p.m. to 11 p.m. Rain date: July 5; 9 p.m. to 11 p.m.
(11) Muskegon Summer Celebration July Fourth Fireworks.	Muskegon, MI. All waters of Muskegon Lake, in the vicinity of Heritage Landing, within the arc of a circle with a 1000-foot radius from a fireworks launch site located on a barge in position 43°14′00″ N, 086°15′50″ W.	July 4; 9 p.m. to 11 p.m. Rain date: July 5; 9 p.m. to 11 p.m.
(12) Grand Haven Jaycees Annual Fourth of July Fireworks.	Grand Haven, MI. All waters of the Grand River within the arc of a circle with a 800-foot radius from the fireworks launch site located on the west bank of the Grand River in position 43°3′54.4″ N, 086°14′14.8″ W.	July 4; 9 p.m. to 11:30 p.m. Rain date: July 5; 9 p.m. to 11:30 p.m.
(13) Celebration Freedom Fireworks.	Holland, MI. All waters of Lake Macatawa in the vicinity of Kollen Park within a 2000-foot radius of an approximate launch position at 42°47′27.5″ N, 086°7′37.1″ W.	The Saturday prior to July 4; 9 p.m. to 11 p.m. Rain date: July 4; 9 p.m. to 11 p.m.
(14) Van Andel Fireworks Show.	Holland, MI. All waters of Lake Michigan and the Holland Channel within the arc of a circle with a 1000-foot radius from the fireworks launch site located in approximate position 42°46′21″ N, 086°12′43.5″ W.	July 4; 9 p.m. to 11 p.m. Raindate: July 3; 9 p.m. to 11 p.m.
(15) Saugatuck Independence Day Fireworks.	Saugatuck, MI. All waters of Kalamazoo Lake within the arc of a circle with a 500-foot radius from the fireworks launch site in position 42°39′4.4″ N, 086°12′17.1″ W.	July 4; 8 p.m. to 10 p.m. Rain date: July 5; 8 p.m. to 10 p.m.
(16) South Haven Fourth of July Fireworks.	South Haven, MI. All waters of Lake Michigan and the Black River within the arc of a circle with a 1000-foot radius from the fireworks launch site located in position 42°24′7.5″ N, 086°17′11.8″ W.	July 3; 9:30 p.m. to 11:30 p.m.
(17) Town of Dune Acres Independence Day Fireworks.	Dune Acres, IN. All Waters of Lake Michigan within the arc of a circle with a 700-foot radius from the fireworks launch site located in position 41°39′18.1″ N, 087°5′14.3″ W.	The first Saturday of July; 8:45 p.m. to 10:30 p.m.
(18) Gary Fourth of July Fireworks.	Gary, IN. All waters of Lake Michigan, approximately 2.5 miles east of Gary Harbor, within the arc of a circle with a 500-foot radius from the fireworks launch site located in position 41°37′19″ N, 087°14′31″ W.	July 4; 9 p.m. to 11 p.m. Rain date: July 5; 9 p.m. to 11 p.m.
(19) Joliet Independence Day Celebration Fireworks.	Joliet, IL. All waters of the Des Plains River, at mile 288, within the arc of a circle with a 500-foot radius from the fireworks launch site located in position 41°31′31″ N, 088°05′15″ W.	July 3; 9 p.m. to 11 p.m. Rain date: July 4; 9 p.m. to 11 p.m.
(20) Glencoe Fourth of July Celebration Fireworks.	Glencoe, IL. All waters of Lake Michigan in the vicinity of Lake Front Park, within the arc of a circle with a 500-foot radius from a barge in position 42°08′24.22″ N, 087°44′55.80″ W.	July 4; 9 p.m. to 11 p.m. Rain date: July 5; 9 p.m. to 11 p.m.
(21) Lakeshore Country Club Independence Day Fireworks.	Glencoe, IL. All waters of Lake Michigan within the arc of a circle with a 1000-foot radius from the fireworks launch site located in position 42°08′27″ N, 087°44′57″ W.	July 4; 9 p.m. to 11 p.m. Rain date: July 5; 9 p.m. to 11 p.m.
(22) Shore Acres Country Club Independence Day Fireworks.	Lake Bluff, IL. All waters of Lake Michigan within the arc of a circle with a 600-foot radius from approximate position 42°17′50.8″ N, 087°49′50.2″ W.	July 4; 9 p.m. to 11 p.m. Rain date: July 5; 9 p.m. to 11 p.m.
(23) Kenosha Independence Day Fireworks.	Kenosha, WI. All waters of Lake Michigan and Kenosha Harbor within the arc of a circle with a 1000-foot radius from the fireworks launch site located in position 42°35′17″ N, 087°48′27″ W.	July 4; 9 p.m. to 11 p.m. Rain date: July 5; 9 p.m. to 11 p.m.
(24) Fourthfest of Greater Racine Fireworks.	Racine, WI. All waters of Lake Michigan and Racine Harbor in the vicinity of North Beach within a 320-foot radius of a launch position at 42°44′14.1″ N, 087°46′33.7″ W All waters of Lake Michigan and Racine Harbor in the vicinity of North Beach within a 420-foot radius of a launch position at 42°44′17″ N, 087°46′42″ W.	July 4; 9 p.m. to 11 p.m. Rain date: July 5; 9 p.m. to 11 p.m.

TABLE 165.929—Continued

Event	Location [1]	Enforcement date and time [2]
(25) Sheboygan Fourth of July Celebration Fireworks.	Sheboygan, WI. All waters of Lake Michigan and Sheboygan Harbor, in the vicinity of the south pier, within the arc of a circle with a 1000-foot radius from the fireworks launch site located in position 43°44′55″ N, 087°41′51″ W.	July 4; 9 p.m. to 11 p.m. Rain date: July 5; 9 p.m. to 11 p.m.
(26) Manitowoc Independence Day Fireworks.	Manitowoc, WI. All waters of Lake Michigan and Manitowoc Harbor, in the vicinity of south breakwater, within the arc of a circle with a 1000-foot radius from the fireworks launch site located in position 44°05′24″ N, 087°38′45″ W.	July 4; 9 p.m. to 11 p.m. Rain date: July 5; 9 p.m. to 11 p.m.
(27) Sturgeon Bay Independence Day Fireworks.	Sturgeon Bay, WI. All waters of Sturgeon Bay, in the vicinity of Sunset Park, within the arc of a circle with a 1000-foot radius from the fireworks launch site located on a barge in position 44°50′37″ N, 087°23′18″ W.	July 4; 9 p.m. to 11 p.m. Rain date: July 5; 9 p.m. to 11 p.m.
(28) Fish Creek Independence Day Fireworks.	Fish Creek, WI. All waters of Green Bay, in the vicinity of Fish Creek Harbor, within the arc of a circle with a 1000-foot radius from the fireworks launch site located on a barge in position 45°07′52″ N, 087°14′37″ W.	The first Saturday after July 4; 9 p.m. to 11 p.m.
(29) Fire over the Fox Fireworks.	Green Bay, WI. All waters of the Fox River including the mouth of the East River from the railroad bridge in approximate position 44°31′28″ N, 088°0′38″ W then southwest to the US 141 bridge in approximate position 44°31′6.1″ N, 088°0′57.8″ W.	July 4; 9:45 p.m. to 11 p.m. Rain date: July 5; 9:45 p.m. to 11 p.m.
(30) Celebrate Americafest Ski Show.	Green Bay, WI. All waters of the Fox River including the mouth of the East River from the West Walnut Street Bridge in approximate position 44°30′54.7″ N, 088°01′06″ W, then northeast to an imaginary line across the river bisecting 44°31′20.2″ N, 088°0′38.4″ W.	July 4 from 2:30 p.m. to 4:30 p.m. Rain date: July 5; 2:30 p.m. to 4:30 p.m.
(31) Marinette Fourth of July Celebration Fireworks.	Marinette, WI. All waters of the Menominee River, in the vicinity of Stephenson Island, within the arc of a circle with a 900 foot radius from the fireworks launch site in position 45°6′13.9″ N, 087°37′45.4″ W.	July 4; 9 p.m. to 11 p.m. Rain date: July 5; 9 p.m. to 11 p.m.
(32) Evanston Fourth of July Fireworks.	Evanston, IL. All waters of Lake Michigan, in the vicinity of Centennial Park Beach, within the arc of a circle with a 500-foot radius from the fireworks launch site located in position 42°02′56″ N, 087°40′21″ W.	July 4; 9 p.m. to 11 p.m. Rain date: July 5; 9 p.m. to 11 p.m.
(33) Gary Air and Water Show	Gary, IN. All waters of Lake Michigan bounded by a line drawn from 41°37′15″ N, 087°16′45.8″ W; then east to 41°37′26.4″ N, 087°13′49.3″ W; then north to 41°38′1.0″ N, 087°13′52.6″ W; then southwest to 41°37′48.3″ N, 087°16′46.0″ W; then south returning to the point of origin.	July 10 thru 14; 8:30 a.m. to 5 p.m.
(34) Annual Trout Festival Fireworks.	Kewaunee, WI. All waters of Kewaunee Harbor and Lake Michigan within the arc of a circle with a 1000-foot radius from the fireworks launch site located in position 44°27′29″ N, 087°29′45″ W.	Friday of the second complete weekend of July; 9 p.m. to 11 p.m.
(35) Michigan City Summerfest Fireworks.	Michigan City, IN. All waters of Michigan City Harbor and Lake Michigan within the arc of a circle with a 1000-foot radius from the fireworks launch site located in position 41°43′42″ N, 086°54′37″ W.	Sunday of the second complete weekend of July; 8:30 p.m. to 10:30 p.m.
(36) Port Washington Fish Day Fireworks.	Port Washington, WI. All waters of Port Washington Harbor and Lake Michigan, in the vicinity of the WE Energies coal dock, within the arc of a circle with a 1000-foot radius from the fireworks launch site located in position 43°23′07″ N, 087°51′54″ W.	The third Saturday of July; 9 p.m. to 11 p.m.
(37) Bay View Lions Club South Shore Frolics Fireworks.	Milwaukee, WI. All waters of Lake Michigan and Milwaukee Harbor, in the vicinity of South Shore Yacht Club, within the arc of a circle with a 900-foot radius from the fireworks launch site in position 42°59′39.5″ N, 087°52′48.5″ W.	Friday, Saturday, and Sunday of the second or third weekend of July; 9 p.m. to 11 p.m. each day.
(38) Venetian Festival Fireworks.	St. Joseph, MI. All waters of Lake Michigan and the St. Joseph River, near the east end of the south pier, within the arc of a circle with a 1000-foot radius from the fireworks launch site located in position 42°06′48″ N, 086°29′15″ W.	Saturday of the third complete weekend of July; 9 p.m. to 11 p.m.
(39) Joliet Waterway Daze Fireworks.	Joliet, IL. All waters of the Des Plaines River, at mile 287.5, within the arc of a circle with a 300-foot radius from the fireworks launch site located in position 41°31′15″ N, 088°05′17″ W.	Friday and Saturday of the third complete weekend of July; 9 p.m. to 11 p.m. each day.
(40) EAA Airventure	Oshkosh, WI. All waters of Lake Winnebago bounded by a line drawn from 43°57′30″ N, 088°30′00″ W; then south to 43°56′56″ N, 088°29′53″ W, then east to 43°56′40″ N, 088°28′40″ W; then north to 43°57′30″ N, 088°28′40″ W; then west returning to the point of origin.	The last complete week of July, beginning Monday and ending Sunday; 8 a.m. to 8 p.m. each day.

TABLE 165.929—Continued

Event	Location [1]	Enforcement date and time [2]
(41) Saugatuck Venetian Night Fireworks.	Saugatuck, MI. All waters of Kalamazoo Lake within the arc of a circle with a 500-foot radius from the fireworks launch site located on a barge in position 42°39′4.4″ N, 086°12′17.1″ W.	The last Saturday of July; 9 p.m. to 11 p.m.
(42) Roma Lodge Italian Festival Fireworks.	Racine, WI. All waters of Lake Michigan and Racine Harbor within the arc of a circle with a 1000-foot radius from the fireworks launch site located in position 42°44′04″ N, 087°46′20″ W.	Friday and Saturday of the last complete weekend of July; 9 p.m. to 11 p.m.
(43) Chicago Venetian Night Fireworks.	Chicago, IL. All waters of Monroe Harbor and all waters of Lake Michigan bounded by a line drawn from 41°53′03″ N, 087°36′36″ W; then east to 41°53′03″ N, 087°36′21″ W; then south to 41°52′27″ N, 087°36′21″ W; then west to 41°52′27″ N, 087°36′37″ W; then north returning to the point of origin.	Saturday of the last weekend of July; 9 p.m. to 11 p.m.
(44) New Buffalo Business Association Fireworks.	New Buffalo, MI. All waters of Lake Michigan and New Buffalo Harbor within the arc of a circle with a 800-foot radius from the fireworks launch site located in position 41°48′09″ N, 086°44′49″ W.	July 3rd or July 5th; 9:30 p.m. to 11:15 p.m.
(45) Start of the Chicago to Mackinac Race.	Chicago, IL. All waters of Lake Michigan in the vicinity of the Navy Pier at Chicago IL, within a rectangle that is approximately 1500 by 900 yards. The rectangle is bounded by the coordinates beginning at 41°53′15.1″ N, 087°35′25.8″ W; then south to 41°52′48.7″ N, 087°35′25.8″ W; then east to 41°52′49.0″ N, 087°34′26.0″ W; then north to 41°53′15″ N, 087°34′26″ W; then west, back to point of origin.	July 12; 2 p.m. to 4:30 p.m. and July 13; 9 a.m. to 3 p.m.
(46) Fireworks at Pier Wisconsin.	Milwaukee, WI. All waters of Milwaukee Harbor, including Lakeshore Inlet and the marina at Pier Wisconsin, within the arc of a circle with a 300-foot radius from the fireworks launch site on Pier Wisconsin located in approximate position 43°02′10.7″ N, 087°53′37.5″ W.	Dates and times will be issued by Notice of Enforcement and Broadcast Notice to Mariners.
(47) Gills Rock Fireworks	Gills Rock, WI. All waters of Green Bay near Gills Rock WI within a 1000-foot radius of the launch vessel in approximate position at 45°17′28.2″ N, 087°1′43.7″ W.	July 4; 8:30 p.m. to 10:30 p.m.
(48) City of Menominee 4th of July Celebration Fireworks.	Menominee, MI. All Waters of Green Bay, in the vicinity of Menominee Marina, within the arc of a circle with a 1000-foot radius from position 45°06′18.4″ N, 087°35′55.8″ W.	July 4; 9 p.m. to 11 p.m.
(49) Miesfeld's Lakeshore Weekend Fireworks.	Sheboygan, WI. All waters of Lake Michigan and Sheboygan Harbor within an 800-foot radius from the fireworks launch site located at the south pier in approximate position 43°44′55″ N, 087°41′58″ W.	July 26; 9 p.m. to 10 p.m.
(50) Marinette Logging and Heritage Festival Fireworks.	Marinette, WI. All waters of the Menominee River, in the vicinity of Stephenson Island, within the arc of a circle with a 900-foot radius from the fireworks launch site in position 45°6′13.9″ N, 087°37′45.4″ W.	July 13; 9 p.m. to 11 p.m.
(f) August Safety Zones		
(1) Michigan Super Boat Grand Prix.	Michigan City, IN. All waters of Lake Michigan bounded by a rectangle drawn from 41°43′39.3″ N, 086°54′33.0″ W; then northeast to 41°44′48.5″ N, 086°51′17.6″ W, then northwest to 41°45′11.7″ N, 086°51′45.4″ W; then southwest to 41°44′3.8″ N, 086°54′52.4″ W; then southeast returning to the point of origin.	The first Sunday of August; 9 a.m. to 4 p.m. Rain date: The first Saturday of August; 9 a.m. to 4 p.m.
(2) Milwaukee Air and Water Show.	Milwaukee, WI. All waters and adjacent shoreline of Lake Michigan and Bradford Beach located within an area that is approximately 4600 by 1550 yards. The area will be bounded by the points beginning at 43°02′57″ N, 087°52′50″ W; then south along the Milwaukee Harbor break wall to 43°02′41″ N, 087°52′49″ W; then southeast to 43°02′26″ N, 087°52′01″ W; then northeast to 43°04′27″ N, 087°50′30″ W; then northwest to 43°04′41″ N, 087°51′29″ W; then southwest returning to the point of origin.	July 31 thru August 4; 8:30 a.m. to 5 p.m.
(3) Port Washington Maritime Heritage Festival Fireworks.	Port Washington, WI. All waters of Port Washington Harbor and Lake Michigan, in the vicinity of the WE Energies coal dock, within the arc of a circle with a 1000-foot radius from the fireworks launch site located in position 43°23′07″ N, 087°51′54″ W.	Saturday of the last complete weekend of July or the second weekend of August; 9 p.m. to 11 p.m.
(4) Grand Haven Coast Guard Festival Fireworks.	Grand Haven, MI. All waters of the Grand River within the arc of a circle with a 600-foot radius from the fireworks launch site located on the west bank of the Grand River in position 43°3′54.4″ N, 086°14′14.8″ W.	First weekend of August; 9 p.m. to 11 p.m.

TABLE 165.929—Continued

Event	Location [1]	Enforcement date and time [2]
(5) Sturgeon Bay Yacht Club Evening on the Bay Fireworks.	Sturgeon Bay, WI. All waters of Sturgeon Bay within the arc of a circle with a 280-foot radius from the fireworks launch site located on a barge in approximate position 44°49′18.57″ N, 087°21′22.19″ W.	The first Saturday of August; 8 p.m. to 10 p.m.
(6) Hammond Marina Venetian Night Fireworks.	Hammond, IN. All waters of Hammond Marina and Lake Michigan within the arc of a circle with a 1000-foot radius from the fireworks launch site located in position 41°41′53″ N, 087°30′43″ W.	The first Saturday of August; 9 p.m. to 11 p.m.
(7) North Point Marina Venetian Festival Fireworks.	Winthrop Harbor, IL. All waters of Lake Michigan within the arc of a circle with a 1000-foot radius from the fireworks launch site located in position 42°28′55″ N, 087°47′56″ W.	The second Saturday of August; 9 p.m. to 11 p.m.
(8) Waterfront Festival Fireworks.	Menominee, MI. All Waters of Green Bay, in the vicinity of Menominee Marina, within the arc of a circle with a 1000-foot radius from position 45°06′18.4″ N, 087°35′55.8″ W.	August 3; 9 p.m. to 11 p.m.
(9) Ottawa Riverfest Fireworks	Ottawa, IL. All waters of the Illinois River, at mile 239.7, within the arc of a circle with a 300-foot radius from the fireworks launch site located in position 41°20′29″ N, 088°51′20″ W.	The first Sunday of August; 9 p.m. to 11 p.m.
(10) Chicago Air and Water Show.	Chicago, IL. All waters and adjacent shoreline of Lake Michigan and Chicago Harbor bounded by a line drawn from 41°55′54″ N at the shoreline, then east to 41°55′54″ N, 087°37′12″ W, then southeast to 41°54′00″ N, 087°36′00″ W, then southwestward to the northeast corner of the Jardine Water Filtration Plant, then due west to the shore.	August 14 thru 18; 8:30 a.m. to 5 p.m.
(11) Pentwater Homecoming Fireworks.	Pentwater, MI. All waters of Lake Michigan and the Pentwater Channel within the arc of a circle with a 1000-foot radius from the fireworks launch site located in position 43°46′56.5″ N, 086°26′38″ W.	Saturday following the second Thursday of August; 9 p.m. to 11 p.m.
(12) Chicago Match Cup Race	Chicago, IL. All waters of Chicago Harbor in the vicinity of Navy Pier and the Chicago Harbor break wall bounded by coordinates beginning at 41°53′37″ N, 087°35′26″ W; then south to 41°53′24″ N, 087°35′26″ W; then west to 41°53′24″ N, 087°35′55″ W; then north to 41°53′37″ N, 087°35′55″ W; then back to point of origin.	August 6 thru 11; 8 a.m. to 8 p.m.
(13) New Buffalo Ship and Shore Fireworks.	New Buffalo, MI. All waters of Lake Michigan and New Buffalo Harbor within the arc of a circle with a 800-foot radius from the fireworks launch site located in position 41°48′09″ N, 086°44′49″ W.	August 10; 9:30 p.m. to 11:15 p.m.
(14) Sister Bay Marinafest Ski Show.	Sister Bay, WI. All waters of Sister Bay within an 800-foot radius of position 45°11′35.1″ N, 087°7′23.5″ W.	August 31; 1 p.m. to 3:15 p.m.
(15) Sister Bay Marinafest Fireworks.	Sister Bay, WI. All waters of Sister Bay within an 800-foot radius of the launch vessel in approximate position 45°11′35.1″ N, 087°7′23.5″ W.	August 31; 8:15 p.m. to 10 p.m.
(16) Vessel Launch at Marinette Marine.	Marinette, WI. All waters of the Menominee River in the vicinity of Marinette Marine Corporation, between the Bridge Street Bridge located in position 45°06′12″ N, 087°37′34″ W and a line crossing the river perpendicularly passing through position 45°05′57″ N, 087°36′43″ W, in the vicinity of the Ansul Company.	This zone will be enforced when a vessel is launched by issue of Notice of Enforcement and Marine Broadcast.
(17) Algoma Shanty Days Fireworks.	Algoma, WI. All waters of Lake Michigan and Algoma Harbor within the arc of a circle with a 1000-foot radius from the fireworks launch site located in position 44°36′24″ N, 087°25′54″ W.	Sunday of the second complete weekend of August; 9 p.m. to 11 p.m.
(g) September Safety Zones		
(1) ISAF Nations Cup Grand Final Fireworks Display.	Sheboygan, WI. All waters of Lake Michigan and Sheboygan Harbor, in the vicinity of the south pier in Sheboygan Wisconsin, within a 500 foot radius from the fireworks launch site located on land in position 43°44′55″ N, 087°41′51″ W.	September 13; 7:45 p.m. to 8:45 p.m.
(h) November Safety Zones		
(1) Downtown Milwaukee Fireworks.	Milwaukee, WI. All waters of the Milwaukee River between the Kilbourn Avenue Bridge at 1.7 miles above the Milwaukee Pierhead Light to the State Street Bridge at 1.79 miles above the Milwaukee Pierhead Light.	The third Thursday of November; 6 p.m. to 8 p.m.
(2) Magnificent Mile Fireworks Display.	Chicago, IL. All waters and adjacent shoreline of the Chicago River bounded by the arc of the circle with a 210-foot radius from the fireworks launch site with its center in approximate position of 41°53′21″ N, 087°37′24″ W.	The third weekend in November; sunset to termination of display.

TABLE 165.929—Continued

Event	Location [1]	Enforcement date and time [2]
(i) December Safety Zones		
(1) New Years Eve Fireworks ..	Chicago, IL. All waters of Monroe Harbor and Lake Michigan within the arc of a circle with a 1000-foot radius from the fireworks launch site located on a barge in approximate position 41°52′41″ N, 087°36′37″ W.	December 31; 11 p.m. to January 1 at 1 a.m.

[1] All coordinates listed in the Table 165.929 reference Datum NAD 1983.
[2] As noted in paragraph (a)(3) of this section, the enforcement dates and times for each of the listed safety zones are subject to change.

[USCG–2013–1033, 79 FR 12066, Mar. 4, 2014]

§ 165.930 Safety Zone, Brandon Road Lock and Dam to Lake Michigan including Des Plaines River, Chicago Sanitary and Ship Canal, Chicago River, and Calumet-Saganashkee Channel, Chicago, IL.

(a) *Location*. The safety zone consists of the following areas:

(1) *Des Plaines River*. All U.S. waters of the Des Plaines River located between mile marker 286.0 (Brandon Road Lock and Dam) and mile marker 290.0 (point at which the Des Plaines River connects with the Chicago Sanitary and Ship Canal).

(2) *Chicago Sanitary and Ship Canal*. All U.S. waters of the Chicago Sanitary and Ship Canal between mile marker 290.0 (point at which the Chicago Sanitary and Ship Canal connects to the Des Plaines River) and mile marker 321.8 (point at which the Chicago Sanitary and Ship Canal Connects to the South Branch Chicago River).

(3) *South Branch Chicago River*. All U.S. waters of the South Branch Chicago River between mile marker 321.8 (point at which the South Branch Chicago River connects to the Chicago Sanitary and Ship Canal) and mile marker 325.6 (point at which the South Branch Chicago River connects to the Chicago River (Main Branch) and North Branch Chicago River).

(4) *Chicago River (Main Branch)*. All U.S. waters of the Chicago River (Main Branch) between mile marker 325.6 (point at which the Chicago River connects to the South Branch Chicago River) and 100 yards extending past the end of the Chicago River covering the area of the Federal channel within Chicago Harbor.

(5) *North Branch Chicago River*. All U.S. waters of the North Branch Chicago River between mile marker 325.6 (point at which the North Branch Chicago River connects to the Chicago River (Main Branch) and the South Branch Chicago River) and mile marker 331.4 (end of navigation channel).

(6) *Calumet-Saganashkee Channel*. All U.S. waters of the Calumet-Saganashkee Channel between mile marker 303.5 (point at which the Calumet-Saganashkee Channel connects to the Chicago Sanitary and Ship Canal) and mile marker 333.0; all U.S. waters of the Calumet-Saganashkee Channel between mile marker 333.0 and Lake Michigan (Calumet Harbor).

(b) *Effective period*. This rule is effective July 18, 2011.

(c) *Enforcement*. (1) The Captain of the Port, Sector Lake Michigan, may enforce this safety zone in whole, in segments, or by any combination of segments. The Captain of the Port, Sector Lake Michigan, may suspend the enforcement of any segment of this safety zone for which notice of enforcement had been given.

(2) The safety zone established by this section will be enforced, pursuant to paragraph (c)(1) of this section, only upon notice by the Captain of the Port, Sector Lake Michigan. Suspension of any previously announced period of enforcement will also be provided by the Captain of the Port, Sector Lake Michigan. All notices of enforcement and notices of suspension of enforcement will clearly describe any segments of the safety zone affected by the notice. At a minimum, notices of enforcement and notices of suspension of enforcement will identify any affected segments by reference to mile markers. When possible, the Captain of the Port, Sector Lake Michigan, will also identify enforced segments of this

safety zone by referencing readily identifiable geographical points. In addition to providing the geographical bounds of any enforced segment of this safety zone, notices of enforcement will also provide the date(s) and time(s) at which enforcement will commence or suspend.

(3) The Captain of the Port, Sector Lake Michigan, will publish notices of enforcement and notices of suspension of enforcement in accordance with 33 CFR 165.7(a) and in a manner that provides as much notice to the public as possible. The primary method of notification will be through publication in the FEDERAL REGISTER. The Captain of the Port, Sector Lake Michigan, will also provide notice through other means, such as Broadcast Notice to Mariners, local Notice to Mariners, local news media, distribution in leaflet form, and on-scene oral notice. Additionally, the Captain of the Port, Sector Lake Michigan, may notify representatives from the maritime industry through telephonic and email notifications.

(d) *Regulations.* (1) In accordance with the general regulations in § 165.23 of this part, entry into, transiting, mooring, laying up, or anchoring within any enforced segment of the safety zone is prohibited unless authorized by the Captain of the Port, Sector Lake Michigan, or his or her designated representative.

(2) The ''designated representative'' of the Captain of the Port, Sector Lake Michigan, is any Coast Guard commissioned, warrant or petty officer who has been designated by the Captain of the Port, Sector Lake Michigan, to act on his or her behalf. The designated representative of the Captain of the Port, Sector Lake Michigan, will be aboard a Coast Guard, Coast Guard Auxiliary, or other designated vessel or will be on shore and will communicate with vessels via VHF radio, loudhailer, or by phone. The Captain of the Port, Sector Lake Michigan, or his or her designated representative may be contacted via VHF radio Channel 16 or the Coast Guard Sector Lake Michigan Command Center at 414–747–7182.

(3) To obtain permission to enter or operate within an enforced segment of the safety zone established by this section, Vessel operators must contact the Captain of the Port, Sector Lake Michigan, or his or her designated representative. Vessel operators given permission to operate in an enforced segment of the safety zone must comply with all directions given to them by the Captain of the Port, Sector Lake Michigan, or his or her designated representative.

(4) When a segment of the safety zone is being enforced, it will be closed to all vessel traffic, except as may be permitted by the Captain of the Port, Sector Lake Michigan, or his or her designated representative. As soon as operations permit, the Captain of the Port, Sector Lake Michigan, will issue a notice of suspension of enforcement as specified in paragraph (c) of this section.

(5) All persons entering any enforced segment of the safety zone established in this section are advised that they do so at their own risk.

[USCG–2011–0228, 76 FR 35109, June 16, 2011]

§ 165.931 Safety Zone, Chicago Harbor, Navy Pier Southeast, Chicago, IL.

(a) *Location.* The following area is a safety zone: The waters of Lake Michigan within Chicago Harbor bounded by coordinates beginning at 41°53′26.5″ N, 087°35′26.5″ W; then south to 41°53′7.6″ N, 087°35′26.3″ W; then west to 41°53′7.6″ N, 087°36′23.2″ W; then north to 41°53′26.5″ N, 087°36′24.6″ W then east back to the point of origin (NAD 83).

(b) *Definitions.* The following definitions apply to this section:

(1) *Designated representative* means any Coast Guard Commissioned, warrant, or petty officer designated by the Captain of the Port, Lake Michigan to monitor a safety zone, permit entry into the zone, give legally enforceable orders to persons or vessels within the zone, and take other actions authorized by the Captain of the Port.

(2) *Public vessel* means vessels owned, chartered, or operated by the United States, or by a State or political subdivision thereof.

(c) *Regulations.* (1) In accordance with the general regulations in 33 CFR

165.23, entry into, transiting, or anchoring within this safety zone is prohibited unless authorized by the Captain of the Port, Lake Michigan, or his designated representative.

(2) This safety zone is closed to all vessel traffic, excepted as may be permitted by the Captain of the Port, Lake Michigan or his designated representative. All persons and vessels must comply with the instructions of the Coast Guard Captain of the Port or his designated representative. Upon being hailed by the U.S. Coast Guard by siren, radio, flashing light or other means, the operator of a vessel shall proceed as directed.

(3) All vessels must obtain permission from the Captain of the Port or his designated representative to enter, move within, or exit the safety zone established in this section when this safety zone is enforced. Vessels and persons granted permission to enter the safety zone must obey all lawful orders or directions of the Captain of the Port or a designated representative.

(d) *Notice of enforcement or suspension of enforcement*. The safety zone established by this section will be enforced only upon notice of the Captain of the Port. The Captain of the Port will cause notice of enforcement of the safety zone established by this section to be made by all appropriate means to the affected segments of the public including publication in the FEDERAL REGISTER as practicable, in accordance with 33 CFR 165.7(a). Such means of notification may also include, but are not limited to Broadcast Notice to Mariners or Local Notice to Mariners.

(e) *Exemption*. Public vessels, as defined in paragraph (b) of this section, are exempt from the requirements in this section.

(f) *Waiver*. For any vessel, the Captain of the Port Lake Michigan or his designated representative may waive any of the requirements of this section, upon finding that operational conditions or other circumstances are such that application of this section is unnecessary or impractical for the purposes of public or environmental safety.

[USCG–2013–0320, 78 FR 42867, July 18, 2013]

§ 165.933 Safety Zone, Chicago Harbor, Navy Pier East, Chicago, IL.

(a) *Location*. The following area is a safety zone: The waters of Lake Michigan within Chicago Harbor between the east end of Navy Pier and the Chicago Harbor breakwater beginning at 41°53′37″ N, 087°35′26″ W; then south to 41°53′24″ N, 087°35′26″ W; then east to 41°53′24″ N, 087°35′55″ W; then north to 41°53′37″ N, 087°35′55″ W; then back to the point of origin.

(b) *Definitions*. The following definitions apply to this section:

(1) *Designated representative* means any Coast Guard commissioned, warrant, or petty officer designated by the Captain of the Port Lake Michigan to monitor this safety zone, permit entry into this zone, give legally enforceable orders to persons or vessels within this zones and take other actions authorized by the Captain of the Port.

(2) *Public vessel* means vessels owned, chartered, or operated by the United States, or by a State or political subdivision thereof.

(c) *Regulations*. (1) The general regulations in 33 CFR 165.23 apply.

(2) All persons and vessels must comply with the instructions of the Coast Guard Captain of the Port Lake Michigan or a designated representative. Upon being hailed by the U.S. Coast Guard by siren, radio, flashing light or other means, the operator of a vessel shall proceed as directed.

(3) All vessels must obtain permission from the Captain of the Port Lake Michigan or a designated representative to enter, move within or exit the safety zone established in this section when this safety zone is enforced. Vessels and persons granted permission to enter the safety zone shall obey all lawful orders or directions of the Captain of the Port Lake Michigan or a designated representative. While within a safety zone, all vessels shall operate at the minimum speed necessary to maintain a safe course.

(d) *Notice of Enforcement or Suspension of Enforcement*. The safety zone established by this section will be enforced only upon notice of the Captain of the Port. The Captain of the Port Lake Michigan will cause notice of enforcement of the safety zone established by

this section to be made by all appropriate means to the affected segments of the public including publication in the FEDERAL REGISTER as practicable, in accordance with 33 CFR 165.7(a). Such means of notification may also include, but are not limited to Broadcast Notice to Mariners or Local Notice to Mariners. The Captain of the Port Lake Michigan will issue a Broadcast Notice to Mariners notifying the public when enforcement of the safety zone established by this section is suspended.

(e) *Exemption*. Public vessels as defined in paragraph (b) of this section are exempt from the requirements in this section.

(f) *Wavier*. For any vessel, the Captain of the Port Lake Michigan or a designated representative may waive any of the requirements of this section, upon finding that operational conditions or other circumstances are such that application of this section is unnecessary or impractical for the purposes of safety or environmental safety.

[CGD09–07–007, 72 FR 32525, June 13, 2007]

§ 165.935 Safety Zone, Milwaukee Harbor, Milwaukee, WI.

(a) *Location*. The following area is a safety zone: the waters of Lake Michigan within Milwaukee Harbor including the Harbor Island Lagoon enclosed by a line connecting the following points: beginning at 43°02′00″ N, 087°53′53″ W; then south to 43°01′44″ N, 087°53′53″ W; then east to 43°01′44″ N, 087°53′25″ W; then north to 43°02′00″ N, 087°53′25″ W; then west to the point of origin.

(b) *Definitions*. The following definitions apply to this section:

(1) *Designated representative* means any Coast Guard commissioned, warrant, or petty officer designated by the Captain of the Port Lake Michigan to monitor this safety zone, permit entry into this zone, give legally enforceable orders to persons or vessels within this zone and take other actions authorized by the Captain of the Port.

(2) *Public vessel* means vessels owned, chartered, or operated by the United States, or by a State or political subdivision thereof.

(c) *Regulations*. (1) The general regulations in 33 CFR 165.23 apply.

(2) All persons and vessels must comply with the instructions of the Coast Guard Captain of the Port or a designated representative. Upon being hailed by the U.S. Coast Guard by siren, radio, flashing light or other means, the operator of a vessel shall proceed as directed.

(3) All vessels must obtain permission from the Captain of the Port or a designated representative to enter, move within or exit the safety zone established in this section when this safety zone is enforced. Vessels and persons granted permission to enter the safety zone shall obey all lawful orders or directions of the Captain of the Port or a designated representative. While within a safety zone, all vessels shall operate at the minimum speed necessary to maintain a safe course.

(d) *Notice of Enforcement or Suspension of Enforcement*. The safety zone established by this section will be enforced only upon notice of the Captain of the Port. The Captain of the Port will cause notice of enforcement of the safety zone established by this section to be made by all appropriate means to the affected segments of the public including publication in the FEDERAL REGISTER as practicable, in accordance with 33 CFR 165.7(a). Such means of notification may also include, but are not limited to Broadcast Notice to Mariners or Local Notice to Mariners. The Captain of the Port will issue a Broadcast Notice to Mariners notifying the public when enforcement of the safety zone established by this section is suspended.

(e) *Exemption*. Public vessels as defined in paragraph (b) of this section are exempt from the requirements in this section.

(f) *Waiver*. For any vessel, the Captain of the Port Lake Michigan or a designated representative may waive any of the requirements of this section, upon finding that operational conditions or other circumstances are such that application of this section is unnecessary or impractical for the purposes of safety or environmental safety.

[CGD09–07–008, 72 FR 32523, June 13, 2007]

§ 165.939 Safety Zones; Annual Fireworks Events in the Captain of the Port Buffalo Zone.

(a) *Safety zones.* The following are designated as safety zones:

(1) *Boldt Castle 4th of July Fireworks, Heart Island, NY.* (i) *Location.* All U.S. waters of the Saint Lawrence River within a 1,120 foot radius of land position 44°20′38.5″ N, 075°55′19.1″ W (NAD 83) at Heart Island, NY.

(ii) *Enforcement date and time.* From 8:30 p.m. to 10:30 p.m. on July 4 of each year.

(2) *Clayton Chamber of Commerce Fireworks, Calumet Island, NY.* (i) *Location.* All U.S. waters of the Saint Lawrence River within an 840 foot radius of land position 44°15′04″ N, 076°05′40″ W (NAD 83) at Calumet Island, NY.

(ii) *Enforcement date and time.* From 9:00 p.m. to 11:30 p.m. on July 3 of each year.

(3) *French Festival Fireworks, Cape Vincent, NY.* (i) *Location.* All U.S. waters of the Saint Lawrence River within an 840 foot radius of land position 44°07′54.6″ N, 076°20′01.3″ W (NAD 83) in Cape Vincent, NY.

(ii) *Enforcement date and time.* From 9:15 p.m. to 11:00 p.m. on the second weekend of July each year.

(4) *Lyme Community Days, Chaumont, NY.* (i) *Location.* All U.S. waters of Chaumont Bay within a 560 foot radius of position 44°04′06.3″ N, 076°08′56.8″ W (NAD 83) in Chaumont, NY.

(ii) *Enforcement date and time.* From 8:30 p.m. to 11:00 p.m. on the fourth weekend of July each year.

(5) *Village Fireworks, Sackets Harbor, NY.* (i) *Location.* All U.S. waters of Black River Bay within an 840 foot radius of position 43°56′51.9″ N, 076°07′46.9″ W (NAD 83) in Sackets Harbor, NY.

(ii) *Enforcement date and time.* From 8:30 p.m. to 10:30 p.m. on July 4 each year.

(6) *Can-Am Festival, Sackets Harbor, NY.* (i) *Location.* All U.S. waters of Black River Bay within a 1,120 foot radius of position 43°57′15.9″ N, 076°06′39.2″ W (NAD 83) in Sackets Harbor, NY.

(ii) *Enforcement date and time.* From 9:00 p.m. to 10:45 p.m. on the third weekend of July each year.

(7) *Oswego Harborfest, Oswego, NY.* (i) *Location.* All U.S. waters of Lake Ontario within a 1,000 foot radius of position 43°28′10″ N, 076°31′04″ W (NAD 83) in Oswego, NY.

(ii) *Enforcement date and time.* From 9:00 to 10:30 p.m. on the last Saturday of July each year.

(8) *Brewerton Fireworks, Brewerton, NY.* (i) *Location.* All U.S. waters of Lake Oneida within an 840 foot radius of barge position 43°14′16.4″ N, 076°08′03.6″ W (NAD 83) in Brewerton, NY.

(ii) *Enforcement date and time.* From 9:00 p.m. to 10:30 p.m. on July 3 of each year.

(9) *Celebrate Baldwinsville Fireworks, Baldwinsville, NY.* (i) *Location.* All U.S. waters of the Seneca River within a 700 foot radius of land position 43°09′24.9″ N, 076°20′18.9″ W (NAD 83) in Baldwinsville, NY.

(ii) *Enforcement date and time.* From 9:00 p.m. to 11:00 p.m. on the first weekend of July each year.

(10) *Island Festival Fireworks, Baldwinsville, NY.* (i) *Location.* All U.S. waters of the Seneca River within a 1,120 foot radius of land position 43°09′22″ N, 076°20′15″ W (NAD 83) in Baldwinsville, NY.

(ii) *Enforcement date and time.* From 9:30 p.m. to 11:00 p.m. on the first weekend of July each year.

(11) *Seneca River Days, Baldwinsville, NY.* (i) *Location.* All U.S. waters of the Seneca River within an 840 foot radius of land position 43°09′25″ N, 076°20′21″ W (NAD 83) in Baldwinsville, NY.

(ii) *Enforcement date and time.* From 9 p.m. to 10:30 p.m. on the second weekend of July each year.

(12) *City of Syracuse Fireworks Celebration, Syracuse, NY.* (i) *Location.* All U.S. waters of Onondaga Lake within a 350 foot radius of land position 43°03″37′ N, 076°09″59′ W (NAD 83) in Syracuse, NY.

(ii) *Enforcement date and time.* From 9:30 p.m. to 10:30 p.m. on the last weekend of June each year.

(13) *Tom Graves Memorial Fireworks, Port Bay, NY.* (i) *Location.* All U.S. waters of Port Bay within an 840 foot radius of barge position 43°18″14.8′ N, 076°50″17.3′ W (NAD 83) in Port Bay, NY.

(ii) *Enforcement date and time.* From 9:00 p.m. to 10:30 p.m. on July 3 of each year.

(14) *Village Fireworks, Sodus Point, NY.* (i) *Location.* All U.S. waters of Sodus Bay within a 1,120 foot radius of land

position 43°16″28.7′; N, 076°58″27.5′ W (NAD 83) in Sodus Point, NY.

(ii) *Enforcement date and time.* From 9:30 p.m. to 10:30 p.m. on July 3 of each year.

(15) *Rochester Harbor and Carousel Festival, Rochester, NY.* (i) *Location.* All U.S. waters of Lake Ontario within a 1,120 foot radius of land position 43°15″40.2′ N, 077°36″05.1′ W (NAD 83) in Rochester, NY.

(ii) *Enforcement date and time.* From 8:00 p.m. to 10:00 p.m. on the fourth Monday of June each year.

(16) *A Salute to our Heroes, Hamlin Beach State Park, NY.* (i) *Location.* All U.S. waters of Lake Ontario within a 560 foot radius of land position 43°21″51.9′ N, 077°56″59.6′ W (NAD 83) in Hamlin, NY.

(ii) *Enforcement date and time.* From 9:45 p.m. to 11:30 p.m. on the first weekend of July each year.

(17) *Olcott Fireworks, Olcott, NY.* (i) *Location.* All U.S. waters of Lake Ontario within a 1,120 foot radius of land position 43°20″23.6′ N, 078°43″09.5′ W (NAD 83) in Olcott, NY.

(ii) *Enforcement date and time.* From 9:30 p.m. to 11:00 p.m. on July 3 of each year.

(18) *North Tonawanda Fireworks, North Tonawanda, NY.* (i) *Location.* All U.S. waters of the East Niagara River within a 1,400 foot radius of land position 43°01″39.6′ N, 078°53″07.5′ W (NAD 83) in North Tonawanda, NY.

(ii) *Enforcement date and time.* From 8:45 p.m. to 10:15 p.m. on July 4 of each year.

(19) *Tonawanda's Canal Fest Fireworks, Tonawanda, NY.* (i) *Location.* All U.S. waters of the East Niagara River within a 210 foot radius of land position 43°01″17.8′ N, 078°52″40.9′ W (NAD 83) in Tonawanda, NY.

(ii) *Enforcement date and time.* From 9:00 p.m. to 10:30 p.m. on the fourth Sunday of July each year.

(20) *Celebrate Erie Fireworks, Erie, PA.* (i) *Location.* All U.S. waters of Presque Isle Bay within an 800 foot radius of land position 42°08″19′ N, 080°05″29′ W (NAD 83) in Erie, PA.

(ii) *Enforcement date and time.* From 9:45 p.m. to 10:30 p.m. on the third weekend of August each year.

(21) *Conneaut Fourth of July Fireworks, Conneaut, OH.* (i) *Location.* All U.S. waters of Lake Erie within an 840 foot radius of position 41°58′01.3″ N, 080°33′39.5″ W (NAD 83) in Conneaut, OH.

(ii) *Enforcement date and time.* From 9:00 p.m. to 11:30 p.m. on the first weekend of July each year.

(22) *Fairport Harbor Mardi Gras, Fairport, OH.* (i) *Location.* All U.S. waters of Lake Erie within a 350 foot radius of land position 41°45′30″ N, 081°16′18″ W (NAD 83) east of the harbor entrance at Fairport Harbor Beach, OH.

(ii) *Enforcement date and time.* From 9:00 p.m. to 10:30 p.m. at the beginning of the second week of July each year.

(23) *Mentor Harbor Yacht Club Fireworks, Mentor Harbor, OH.* (i) *Location.* All U.S. waters of Lake Erie and Mentor Harbor within a 700 foot radius of land position 41°43′36″ N, 081°21′09″ W (NAD 83) in Mentor Harbor, OH.

(ii) *Enforcement date and time.* From 9:00 p.m. to 10:30 p.m. on July 3 of each year.

(24) *Browns Football Halftime Fireworks, Cleveland, OH.* (i) *Location.* All U.S. waters of Cleveland Harbor and Lake Erie beginning in approximate land position 41°30′49.4″ N, 081°41′37.2″ W (the northwest corner of Burke Lakefront Airport); continuing northwest to 41°31′10.6″ N, 081°41′53.0″ W; then southwest to 41°30′48.6″ N, 081°42′30.9″ W (the northwest corner of dock 28 at the Cleveland Port Authority) then northeast back to the starting point at 41°30′49.4″ N, 081°41′37.2″ W (NAD 83).

(ii) *Enforcement Date and Time.* On a Sunday during the second or third Cleveland Browns home game each year.

(25) *City of Cleveland 4th of July, Cleveland, OH.* (i) *Location.* All U.S. waters of Lake Erie and Cleveland Harbor within a 1,000 foot radius of land position 41°30′10″ N, 081°42′36″ W (NAD 83) at Dock 20 in Cleveland, OH.

(ii) *Enforcement date and time.* From 9:30 p.m. to 11:00 p.m. on July 4 of each year.

(26) *Cleveland Yachting Club Fireworks Display, Rocky River, OH.* (i) *Location.* All U.S. waters of the Rocky River and Lake Erie within a 560 foot radius of land position 41°29′25.7″ N, 081°50′18.5″ W

(NAD 83), at Sunset Point on the western side of the mouth of the Rocky River in Cleveland, OH.

(ii) *Enforcement date and time.* From 9:15 p.m. to 11:00 p.m. on the second Thursday of July each year.

(27) *Sheffield Lake Fireworks, Sheffield Lake, OH.* (i) *Location.* All U.S. waters of Lake Erie within a 700 foot radius of land position 41°29′26.2″ N, 082°06′47.7″ W (NAD 83), at the lake front area in Sheffield Lake, OH.

(ii) *Enforcement date and time.* From 9:30 p.m. to 11:00 p.m. on the second Friday of July each year.

(28) *Lorain 4th of July Celebration Fireworks, Lorain, OH.* (i) *Location.* All U.S. waters of Lorain Harbor within a 1,400 foot radius of land position 41°28′35.5″ N, 082°10′51.3″ W (NAD 83), east of the harbor entrance on the end of the break wall near Spitzer's Marina.

(ii) *Enforcement date and time.* From 9:15 p.m. to 11:00 p.m. on July 3 or 4 of each year.

(29) *Lorain Port Fest Fireworks Display, Lorain, OH.* (i) *Location.* All U.S. waters of Lorain Harbor within a 750 foot radius of land position 41°28′02.4″ N, 082°10′21.9″ W (NAD 83) in Lorain, OH.

(ii) *Enforcement date and time.* From 9:45 p.m. to 11:00 p.m. on the third weekend of July each year.

(b) *Definitions.* The following definitions apply to this section:

(1) *Designated Representative* means any Coast Guard Commissioned, Warrant, or Petty Officer designated by the Captain of the Port Buffalo to monitor a safety zone, permit entry into the zone, give legally enforceable orders to persons or vessels within the zones, and take other actions authorized by the Captain of the Port.

(2) *Public vessels* means vessels owned, chartered, or operated by the United States or by a State or political subdivision thereof.

(c) *Regulations.* (1) In accordance with the general regulations in section 165.23 of this part, entry into, transiting, or anchoring within any of the safety zones contained in this section during a period of enforcement is prohibited unless authorized by the Captain of the Port Buffalo or his designated on-scene representative.

(2)(i) These safety zones are closed to all vessel traffic, except as may be permitted by the Captain of the Port or his designated representative.

(ii) All persons and vessels must comply with the instructions of the Captain of the Port Buffalo or his designated representative.

(iii) Upon being hailed by the Coast Guard by siren, radio, flashing light or other means, the operator of a vessel shall proceed as directed.

(3)(i) All vessels must obtain permission from the Captain of the Port or his designated representative to enter or move within any safety zone established in this section when the safety zone is enforced.

(ii) Vessels and persons granted permission to enter a safety zone must obey all lawful orders or directions of the Captain of the Port or a designated representative.

(iii) While within a safety zone, all vessels must operate at the minimum speed necessary to maintain a safe course.

(d) *Exemption.* Public vessels, as defined in paragraph (b) of this section, are exempt from the requirements in this section.

(e) *Waiver.* Upon finding that operational conditions or other circumstances are such that application of this section is unnecessary or impractical, the Captain of the Port Buffalo or his designated representative may waive any of the requirements of this section for any vessel.

(f) *Notification.* The Captain of the Port Buffalo will notify the public when the zones in this section will be enforced by all appropriate means In keeping with 33 CFR 165.7(a), such means of notification may include, but are not limited to Broadcast Notice to Mariners or Local Notice to Mariners and publication of Notices of Enforcement in the FEDERAL REGISTER. The Captain of the Port will issue a Broadcast Notice to Mariners notifying the public when enforcement of the safety zones established by this section are in effect and when they are cancelled.

[USCG–2012–1084, 78 FR 23852, Apr. 23, 2013]

EFFECTIVE DATE NOTE: By USCG–2014–0081, 79 FR 36407, June 27, 2014, § 165.939 was revised, effective July 28, 2014. For the convenience of the user, the revised text is set forth as follows:

§ 165.939 Safety Zones; Annual Events in the Captain of the Port Buffalo Zone.

(a) *Safety Zones.* The following are designated as safety zones. The enforcement dates and times for each of the safety zones listed in this section are subject to change, but the duration of enforcement would remain the same or nearly the same as the total number of hours as published. In the event of a change, the Captain of the Port Sector Buffalo will provide notice to the public by publishing a Notice of Enforcement in the FEDERAL REGISTER, as well as, issuing a Broadcast Notice to Mariners.

(1) *Boldt Castle 4th of July Fireworks, Heart Island, NY.* (i) *Location.* All U.S. waters of the Saint Lawrence River within a 1,120 foot radius of land position 44°20′38.5″ N, 075°55′19.1″ W (NAD 83) at Heart Island, NY.

(ii) *Enforcement period.* July 4 from 8:30 p.m. to 10:30 p.m. each year.

(2) *Clayton Chamber of Commerce Fireworks, Calumet Island, NY.* (i) *Location.* All U.S. waters of the Saint Lawrence River within an 840 foot radius of land position 44°15′04″ N, 076°05′40″ W (NAD 83) at Calumet Island, NY.

(ii) *Enforcement period.* July 3 from 9 p.m. to 11:30 p.m. of each year.

(3) *French Festival Fireworks, Cape Vincent, NY.* (i) *Location.* All U.S. waters of the Saint Lawrence River within an 840 foot radius of land position 44°07′54.6″ N, 076°20′01.3″ W (NAD 83) in Cape Vincent, NY.

(ii) *Enforcement period.* The second weekend of July from 9:15 p.m. to 11 p.m. each year.

(4) *Lyme Community Days, Chaumont, NY.* (i) *Location.* All U.S. waters of Chaumont Bay within a 560 foot radius of position 44°04′06.3″ N, 076°08′56.8″ W (NAD 83) in Chaumont, NY.

(ii) *Enforcement period.* The fourth weekend of July from 8:30 p.m. to 11 p.m. each year.

(5) *Village Fireworks, Sackets Harbor, NY.* (i) *Location.* All U.S. waters of Black River Bay within an 840 foot radius of position 43°56′51.9″ N, 076°07′46.9″ W (NAD 83) in Sackets Harbor, NY.

(ii) *Enforcement period.* July 4 from 8:30 p.m. to 10:30 p.m. each year.

(6) *Can-Am Festival, Sackets Harbor, NY.* (i) *Location.* All U.S. waters of Black River Bay within a 1,120 foot radius of position 43°57′15.9″ N, 076°06′39.2″ W (NAD 83) in Sackets Harbor, NY.

(ii) *Enforcement period. T*he third weekend of July from 9 p.m. to 10:45 p.m. each year.

(7) *Oswego Harborfest, Oswego, NY.* (i) *Location.* All U.S. waters of Lake Ontario within a 1,000 foot radius of position 43°28′10″ N, 076°31′04″ W (NAD 83) in Oswego, NY.

(ii) *Enforcement period.* The last Saturday of July from 9 to 10:30 p.m. each year.

(8) *Brewerton Fireworks, Brewerton, NY.* (i) *Location.* All U.S. waters of Lake Oneida within an 840 foot radius of barge position 43°14′16.4″ N, 076°08′03.6″ W (NAD 83) in Brewerton, NY.

(ii) *Enforcement period.* July 3 from 9 p.m. to 10:30 p.m. each year.

(9) *Celebrate Baldwinsville Fireworks, Baldwinsville, NY.* (i) *Location.* All U.S. waters of the Seneca River within a 700 foot radius of land position 43°09′24.9″ N, 076°20′18.9″ W (NAD 83) in Baldwinsville, NY.

(ii) *Enforcement period.* The first weekend of July from 9 p.m. to 11 p.m. each year.

(10) *Island Festival Fireworks, Baldwinsville, NY.* (i) *Location.* All U.S. waters of the Seneca River within a 1,120 foot radius of land position 43°09′22″ N, 076°20′15″ W (NAD 83) in Baldwinsville, NY.

(ii) *Enforcement period.* The first weekend of July from 9:30 p.m. to 11 p.m. each year.

(11) *Seneca River Days, Baldwinsville, NY.* (i) *Location.* All U.S. waters of the Seneca River within an 840 foot radius of land position 43°09′25″ N, 076°20′21″ W (NAD 83) in Baldwinsville, NY.

(ii) *Enforcement period.* The second weekend of July from 9 p.m. to 10:30 p.m. each year.

(12) *City of Syracuse Fireworks Celebration, Syracuse, NY.* (i) *Location.* All U.S. waters of Onondaga Lake within a 350 foot radius of land position 43°03′37″ N, 076°09′59″ W (NAD 83) in Syracuse, NY.

(ii) *Enforcement period.* The last weekend of June from 9:30 p.m. to 10:30 p.m. each year.

(13) *Tom Graves Memorial Fireworks, Port Bay, NY.* (i) *Location.* All U.S. waters of Port Bay within an 840 foot radius of barge position 43°18′14.8″ N, 076°50′17.3″ W (NAD 83) in Port Bay, NY.

(ii) *Enforcement period.* July 3 from 9 p.m. to 10:30 p.m. of each year.

(14) *Village Fireworks, Sodus Point, NY.* (i) *Location.* All U.S. waters of Sodus Bay within a 1,120 foot radius of land position 43°16′28.7″ N, 076°58′27.5″ W (NAD 83) in Sodus Point, NY.

(ii) *Enforcement period.* July 3 from 9:30 p.m. to 10:30 p.m. each year.

(15) *Rochester Harbor and Carousel Festival, Rochester, NY.* (i) *Location.* All U.S. waters of Lake Ontario within a 1,120 foot radius of land position 43°15′40.2″ N, 077°36′05.1″ W (NAD 83) in Rochester, NY.

(ii) *Enforcement period.* The fourth Monday of June from 8 p.m. to 10 p.m. each year.

(16) *A Salute to our Heroes, Hamlin Beach State Park, NY.* (i) *Location.* All U.S. waters of Lake Ontario within a 560 foot radius of land position 43°21′51.9″ N, 077°56′59.6″ W (NAD 83) in Hamlin, NY.

(ii) *Enforcement period.* The first weekend of July from 9:45 p.m. to 11:30 p.m. each year.

(17) *Olcott Fireworks, Olcott, NY.* (i) *Location.* All U.S. waters of Lake Ontario within a 1,120 foot radius of land position 43°20′23.6″ N, 078°43′09.5″ W (NAD 83) in Olcott, NY.

(ii) *Enforcement period.* July 3 from 9:30 p.m. to 11 p.m. of each year.

(18) *North Tonawanda Fireworks, North Tonawanda, NY.* (i) *Location.* All U.S. waters of the East Niagara River within a 1,400 foot radius of land position 43°01′39.6″ N, 078°53′07.5″ W (NAD 83) in North Tonawanda, NY.

(ii) *Enforcement period.* July 4 from 8:45 p.m. to 10:15 p.m. of each year.

(19) *Tonawanda's Canal Fest Fireworks, Tonawanda, NY.* (i) *Location.* All U.S. waters of the East Niagara River within a 210 foot radius of land position 43°01′17.8″ N, 078°52′40.9″ W (NAD 83) in Tonawanda, NY.

(ii) *Enforcement period.* The fourth Sunday of July from 9 p.m. to 10:30 p.m. each year.

(20) *Celebrate Erie Fireworks, Erie, PA.* (i) *Location.* All U.S. waters of Presque Isle Bay within an 800 foot radius of land position 42°08′19″ N, 080°05′29″ W (NAD 83) in Erie, PA.

(ii) *Enforcement period.* The third weekend of August from 9:45 p.m. to 10:30 p.m. each year.

(21) *Conneaut Fourth of July Fireworks, Conneaut, OH.* (i) *Location.* All U.S. waters of Lake Erie within an 840 foot radius of position 41°58′01.3″ N, 080°33′39.5″ W (NAD 83) in Erie, PA.

(ii) *Enforcement period.* The first Sunday of July from 9 p.m. to 11:30 p.m. each year.

(22) *Fairport Harbor Mardi Gras, Fairport, OH.* (i) *Location.* All U.S. waters of Lake Erie within a 350 foot radius of land position 41°45′30″ N, 081°16′18″ W (NAD 83) east of the harbor entrance at Fairport Harbor Beach, OH.

(ii) *Enforcement period.* The beginning of the second week of July from 9 p.m. to 10:30 p.m. each year.

(23) *Mentor Harbor Yacht Club Fireworks, Mentor Harbor, OH.* (i) *Location.* All U.S. waters of Lake Erie and Mentor Harbor within a 700 foot radius of land position 41°43′36″ N, 081°21′09″ W (NAD 83) in Mentor Harbor, OH.

(ii) *Enforcement period.* July 3 from 9 p.m. to 10:30 p.m. each year.

(24) *Browns Football Halftime Fireworks, Cleveland, OH.* (i) *Location.* All U.S. waters of Cleveland Harbor and Lake Erie encompassed by a line beginning at approximate land position 41°30′49.4″ N, 081°41′37.2″ W (the northwest corner of Burke Lakefront Airport); continuing northwest to 41°31′10.6″ N, 081°41′53.0″ W; then southwest to 41°30′48.6″ N, 081°42′30.9″ W (the northwest corner of dock 28 at the Cleveland Port Authority) then northeast back to the starting point at 41°30′49.4″ N, 081°41′37.2″ W (NAD 83).

(ii) *Enforcement period.* On a Sunday during the second or third Cleveland Browns home game each year. The Captain of the Port will issue a Notice of Enforcement each year for this Browns Football Halftime Fireworks' safety zone.

(25) *City of Cleveland 4th of July, Cleveland, OH.* (i) *Location.* All U.S. waters of Lake Erie and Cleveland Harbor within a 1,000 foot radius of land position 41°30′10″ N, 081°42′36″ W (NAD 83) at Dock 20 in Cleveland, OH.

(ii) *Enforcement period.* July 4 from 9:30 p.m. to 11 p.m. each year.

(26) *Cleveland Yachting Club Fireworks Display, Rocky River, OH.* (i) *Location.* All U.S. waters of the Rocky River and Lake Erie within a 560 foot radius of land position 41°29′25.7″ N, 081°50′18.5″ W (NAD 83), at Sunset Point on the western side of the mouth of the Rocky River in Cleveland, OH.

(ii) *Enforcement period.* The second Thursday of July from 9:15 p.m. to 11 p.m. each year.

(27) *Sheffield Lake Fireworks, Sheffield Lake, OH.* (i) *Location.* All U.S. waters of Lake Erie within a 700 foot radius of land position 41°29′26.2″ N, 082°06′47.7″ W (NAD 83), at the lake front area in Sheffield Lake, OH.

(ii) *Enforcement period.* The second Friday of July from 9:30 p.m. to 11 p.m. each year.

(28) *Lorain 4th of July Celebration Fireworks, Lorain, OH.* (i) *Location.* All U.S. waters of Lorain Harbor within a 1,400 foot radius of land position 41°28′35.5″ N, 082°10′51.3″ W (NAD 83), east of the harbor entrance on the end of the break wall near Spitzer's Marina.

(ii) *Enforcement period.* July 4 from 9:15 p.m. to 11 p.m. each year.

(29) *Lorain Port Fest Fireworks Display, Lorain, OH.* (i) *Location.* All U.S. waters of Lorain Harbor within a 750 foot radius of land position 41°28′02.4″ N, 082°10′21.9″ W (NAD 83) in Lorain, OH.

(ii) *Enforcement period.* The third weekend of July from 9:45 p.m. to 11 p.m. each year.

(30) *Thunder of the Niagara Hydroplane boat races, North Tonawanda, NY.* (i) *Location.* All U.S. waters of Niagara River, near North Tonawanda, NY within 2 miles of the North Grand Island Bridge, encompassed by a line starting at 43°03′32.95″ N, 078°54′46.93″ W to 43°03′14.55″ N, 078°55′15.97″ W then to 43°02′39.72″ N, 078°54′13.05″ W then to 43°02′59.99″ N, 078°53′41.99″ W and returning to the point of origin (NAD 83).

(ii) *Enforcement period.* The second of weekend of August from 9 a.m. to 5 p.m. each year.

(31) *Antique Boat Show Hydroplane boat races, Grand Island, NY.* (i) *Location.* All waters of Niagara River, Grand Island, NY encompassed by a line starting at position 42°59′59″ N, 078°56′22″ W, East to 49°59′54″ N,078°56′14″ W, South to 42°57′54″ N, 078°56′04″ W, West to 42°057′48″ N, 078°56′22″ W and returning to the point of origin (NAD 83)

(ii) *Enforcement period.* The first weekend of September from 9 a.m. to 4 p.m. each year.

(32) *D-Day Conneaut Air Show, Conneaut, OH.* (i) *Location.* All U.S. waters of Conneaut Township Park, Lake Erie, Conneaut, OH encompassed by a line starting at 41°57.71′ N, 080°34.18′ W; to 41°58.36′N, 080°34.17′ W; then to

41°58.53′ N, 080°33.55′ W; to 41°58.03′ N, 080°33.72′W; and returning to the point of origin. (NAD 83).

(ii) *Enforcement period*. The third weekend of August from 1:45 p.m. to 5:30 p.m. each year.

(33) *Bay Swim, Erie, PA*. (i) *Location*. All U.S. waters of Presque Isle Bay, Erie, PA within a 1000 feet of a line starting at Vista 3 in Presque Isle State Park at position 42°07′29.30″ N, 80°08′48.82″ W and ending at to the Erie Yacht Club at position 42°07′21.74″ N, 80°07′58.30″ W (NAD 83).

(ii) *Enforcement period*. The third week in June each year.

(34) *Rover Fest fireworks display, Cleveland, OH*. (i) *Location*. All U.S. waters of Lake Erie, Cleveland, OH within a 280 foot radius from position 41°30′34.23″ N and 081°41′ 55.73″ W (NAD 83).

(ii) *Enforcement period*. The second or third weekend of July each year.

(35) *Cleveland National Air show, Cleveland, OH*. (i) *Location*. The safety zone encompass the portion of Lake Erie and Cleveland Harbor within a line originating near Burke Lakefront Airport from position 41°30′20″ N and 081°42′20″ W to 41°30′50″ N and 081°42′49″ W, to 41°32′09″ N and 081°39′49″ W, to 41°31′53″ N and 081°39′24″ W, then return to the original position (NAD 83).

(ii) *Enforcement period*. On the Friday before Labor Day through the Wednesday following Labor Day with maximum daily times from 8 a.m. to 6 p.m. The daily time period will be reduced as operations permit.

(b) *Definitions*. The following definitions apply to this section:

(1) *On-scene Representative* means any Coast Guard commissioned, warrant, or petty officer designated by the Captain of the Port Buffalo to monitor a safety zone, permit entry into the zone, give legally enforceable orders to persons or vessels within the zones, and take other actions authorized by the Captain of the Port.

(2) *Public vessel* means vessels owned, chartered, or operated by the United States, or by a State or political subdivision thereof.

(c) *Regulations*. In accordance with the general regulations in §165.23, entry into, transiting, or anchoring within is the aforementioned safety zones are prohibited unless authorized by the Captain of the Port Buffalo or his designated on-scene representative.

(1) The safety zones described in paragraph (a) of this section are closed to all vessel traffic, except as may be permitted by the Captain of the Port Buffalo or his designated on-scene representative.

(2) Vessel operators desiring to enter or operate within the safety zones described in paragraph (a) of this section must contact the Captain of the Port Buffalo or his on-scene representative to obtain permission to do so. The Captain of the Port Buffalo or his on-scene representative may be contacted via VHF Channel 16. Vessel operators given permission to enter or operate in a safety zone must comply with all directions given to them by the Captain of the Port Buffalo, or his on-scene representative.

(d) *Exemption*. Public vessels, as defined in paragraph (c) of this section, are exempt from the requirements in this section.

(e) *Waiver*. For any vessel, the Captain of the Port Buffalo or his designated representative may waive any of the requirements of this section, upon finding that operational conditions or other circumstances are such that application of this section is unnecessary or impractical for the purposes of public or environmental safety.

(f) *Notification*. The Captain of the Port Buffalo will notify the public that the safety zones in this section are or will be enforced by all appropriate means to the affected segments of the public through publication in the FEDERAL REGISTER as practicable, in accordance with 33 CFR 165.7(a). Additionally, the enforcement dates and times for each of the safety zones listed above are subject to change, though the duration of enforcement would remain the same or nearly the same total number of hours as stated above. In either event, whether the safety zones occur at the dates and times as stated above, or whether the date or time of a safety zone changes, the Captain of the Port Buffalo will similarly make such notification as described in this paragraph (f). Such means of further notification may also include, but are not limited to Broadcast Notice to Mariners or Local Notice to Mariners. The Captain of the Port will issue a Broadcast Notice to Mariners notifying the public when enforcement of the safety zone is cancelled.

§ 165.941 Safety Zones; Annual Events in the Captain of the Port Detroit Zone.

(a) *Safety Zones*. The following areas are designated Safety zones: (1) Roostertail Fireworks (barge), Detroit, MI:

(i) *Location:* All waters of the Detroit River within a 300-foot radius of the fireworks launch site located at position 42°21′16.67″ N, 082°58′20.41″ W. (NAD 83). This area is located between Detroit and Belle Isle near the Roostertail restaurant.

(ii) *Expected date:* One evening during the third week in July. The exact dates and times for this event will be determined annually.

(2) Washington Township Summerfest Fireworks, Toledo, OH:

(i) *Location:* All waters of the Ottawa River within a 600-foot radius of the

fireworks launch site located at position 41°43′29″ N, 083°28′47″ W (NAD 83). This area is located at the Fred C. Young Bridge, Toledo, OH.

(ii) *Expected date:* One evening during the last week in June or the first week in July. The exact dates and times for this event will be determined annually.

(3) Au Gres City Fireworks, Au Gres, MI:

(i) *Location:* All waters of Saginaw Bay within a 700-foot radius of the fireworks launch site located at position 44°1.4′ N, 083°40.4′ W (NAD 83). This area is located at the end of the pier near the end of Riverside Drive in Au Gres, MI.

(ii) *Expected date:* One evening during the last week in June or the first week in July. The exact dates and times for this event will be determined annually.

(4) The Old Club Fireworks, Harsens Island, MI:

(i) *Location:* All waters of Lake St. Clair within an 850-foot radius of the fireworks launch site located at position 42°32.4′ N, 082°40.1′ W (NAD 83). This area is located near the southern end of Harsens Island, MI.

(ii) *Expected date:* One evening during the last week of June or the first week of July. The exact dates and times for this event will be determined annually.

(5) Put-In-Bay Fourth of July Fireworks, Put-In-Bay, OH:

(i) *Location:* All waters of Lake Erie within a 1000-foot radius of the fireworks launch site located at position 41°39.7′ N, 082°48.0′ W (NAD 83). This area is located in Put-In-Bay Harbor.

(ii) *Expected date:* One evening during the first week of July. The exact dates and times for this event will be determined annually.

(6) Gatzeros Fireworks, Grosse Pointe Park, MI:

(i) *Location:* All waters of Lake St. Clair within a 300-foot radius of the fireworks launch site located at position 42°22.6′ N, 082°54.8′ W (NAD 83). This area is located near Grosse Pointe Park, MI.

(ii) *Expected date:* One evening during the first week in July. The exact dates and times for this event will be determined annually.

(7) Harrisville Fireworks, Harrisville, MI:

(i) *Location:* All waters of Lake Huron within a 450-foot radius of the fireworks launch site located at position 44°39.7′ N, 083°17.0′ W (NAD 83). This area is located at the end of the break wall at the Harrisville harbor in Harrisville, MI.

(ii) *Expected date:* One evening during the first week in July. The exact dates and times for this event will be determined annually.

(8) Harbor Beach Fireworks, Harbor Beach, MI:

(i) *Location:* All waters of Lake Huron within a 700-foot radius of the fireworks launch site located at position 43°50.8′ N, 082°38.6′ W (NAD 83). This area is located at the end of the railroad pier east of the end of State Street in Harbor Beach, MI.

(ii) *Expected date:* One evening during the second week in July. The exact dates and times for this event will be determined annually.

(9) Trenton Rotary Roar on the River Fireworks, Trenton, MI:

(i) *Location:* All waters of the Detroit River within a 420-foot radius of the fireworks launch site located at position 42°7.8′ N, 083°10.4 ′ W (NAD 83). This area is located between Grosse Ile and Elizabeth Park in Trenton, MI.

(ii) *Expected date:* One evening during the third week in July. The exact dates and times for this event will be determined annually.

(10) Nautical Mile Venetian Festival Fireworks, St. Clair Shores, MI:

(i) *Location:* All waters of Lake St. Clair within a 210-foot radius of the fireworks launch site located at position 42°28.2′ N, 082°52.5′ W (NAD 83). This area is located near Jefferson Beach Marina in St. Clair Shores, MI.

(ii) *Expected date:* One evening during the second week in August. The exact dates and times for this event will be determined annually.

(11) Cheeseburger Festival Fireworks, Caseville, MI:

(i) *Location:* All waters of Lake Huron within a 300-foot radius of the fireworks launch site located at position 43°56.9′ N, 083°17.2′ W (NAD 83). This area is located near the break wall located at Caseville County Park, Caseville, MI.

(ii) *Expected date:* One evening during the second week in August. The exact

dates and times for this event will be determined annually.

(12) Detroit International Jazz Festival Fireworks, Detroit, MI:

(i) *Location:* All waters of the Detroit River within a 560-foot radius of the fireworks launch site located at position 42°19.6′ N, 83°2.6′ W (NAD 83). This area is located in the Detroit River between Cobo Hall and the GM Headquarters in Detroit, MI.

(ii) *Expected date:* One evening during the last week in August or the first week in September. The exact dates and times for this event will be determined annually.

(13) Marine City Maritime Festival Fireworks, Marine City, MI:

(i) *Location:* All waters of the St. Clair River within an 840-foot radius of the fireworks launch site located at position 42°42.9′ N, 082°29.1′ W (NAD 83). This area is located east of Marine City.

(ii) *Expected date:* One evening during the third week in September. The exact dates and times for this event will be determined annually.

(14) Schoenith Family Foundation Fireworks, Detroit, MI:

(i) *Location:* All waters of the Detroit River, within a 210-foot radius of the fireworks launch site located at position 42°21.2′ N, 82°58.4′ W. (NAD 83). This area is located between Detroit and Belle Isle.

(ii) *Expected date:* One evening during the third week in September. The exact dates and times for this event will be determined annually.

(15) Toledo Country Club Memorial Celebration and Fireworks, Toledo, OH:

(i) *Location:* All waters of the Maumee River, within a 250-yard radius of the fireworks launch site located on shore at position 41°35′12.58″ N, 83°36′16.58″ W. (NAD 83). This area is located at the Toledo Country Club's 18th Green and encompasses the fireworks launch site.

(ii) *Expected date:* One evening during the last week in May. The exact dates and times for this event will be determined annually.

(16) Luna Pier Fireworks Show, Luna Pier, MI:

(i) *Location:* All waters of Lake Erie, within a 300-yard radius of the fireworks launch site located at position 41°48′32″ N, 83°26′23″ W. (NAD 83). This area is located at the Clyde E. Evens Municipal Pier.

(ii) *Expected date:* One evening during the first week in July. The exact dates and times for this event will be determined annually.

(17) Toledo Country Club 4th of July Fireworks, Toledo, OH:

(i) *Location:* All waters of the Maumee River, within a 250-yard radius of the fireworks launch site located on shore at position 41°35′12.58″ N, 83°36′16.58″ W. (NAD 83). This area is located at the Toledo Country Club's 18th Green and encompasses the fireworks launch site.

(ii) *Expected date:* One evening during the first week in July. The exact dates and times for this event will be determined annually.

(18) Pharm Lights Up The Night Fireworks, Toledo, OH:

(i) *Location:* All waters of the Maumee River, within a 300-yard radius of the fireworks launch site located at position 41°38′35″ N, 83°31′54″ W. (NAD 83). This position is located at the bow of the museum ship SS WILLIS B. BOYER.

(ii) *Expected date:* One day evening during the first or second weeks in July. The exact dates and times for this event will be determined annually.

(19) Perrysburg/Maumee 4th of July Fireworks, Perrysburg, OH:

(i) *Location:* All waters of the Maumee River, within an 850-foot radius of the fireworks launch site located at position 41°33′27″ N, 83°38′59″ W. (NAD 83). This position is located at the Perrysburg/Maumee Hwy 20 Bridge.

(ii) *Expected date:* One evening during the first week in July. The exact dates and times for this event will be determined annually.

(20) Lakeside July 4th Fireworks, Lakeside, OH:

(i) *Location:* All waters of Lake Erie, within a 560-foot radius of the fireworks launch site located at position 41°32′52″ N, 82°45′03″ W. (NAD 83). This position is located at the Lakeside Association Dock.

(ii) *Expected date:* One evening during the first week in July. The exact dates and times for this event will be determined annually.

(21) Catawba Island Club Fireworks, Catawba Island, OH:

(i) *Location:* All waters of Lake Erie, within a 300-yard radius of the fireworks launch site located at position 41°34′20″ N, 82°51′18″ W. (NAD 83). This position is located at the northwest end of the Catawba Cliffs Harbor Light Pier.

(ii) *Expected date:* One evening during the first week in July. The exact dates and times for this event will be determined annually.

(22) Red, White and Blues Bang Fireworks, Huron, OH:

(i) *Location:* All waters of the Huron River, within a 300-yard radius of the fireworks launch site located at position 41°23′29″ N, 82°32′55″ W. (NAD 83). This position is located at the Huron Ore Docks in Huron, OH.

(ii) *Expected date:* One evening during the first week in July. The exact dates and times for this event will be determined annually.

(23) Huron Riverfest Fireworks, Huron, OH:

(i) *Location:* All waters of Huron Harbor, within a 350-foot radius of the fireworks launch site located at the Huron Ore Docks at position 41°23′38″ N, 82°32′59″ W. (NAD 83).

(ii) *Expected date:* One evening during the second week in July. The exact dates and times for this event will be determined annually.

(24) Kelleys Island, Island Fest Fireworks, Kelleys Island, OH:

(i) *Location:* All waters of Lake Erie, within a 300-yard radius of the fireworks launch site located at position 41°35′43″ N, 82°43′30″ W. (NAD 83). This position is located at the old Neuman Boat Line Dock.

(ii) *Expected date:* One evening during the third or fourth weeks in July. The exact dates and times for this event will be determined annually.

(25) Riverfest at the International Docks, Toledo, OH:

(i) *Location:* All waters of the Maumee River, extending from the bow of the museum ship SS WILLIS B. BOYER (41°38′35″ N, 83°31′54″ W), then north/north-east to the south end of the City of Toledo Street (41°38′51″ N, 83°31′50″ W), then south-west to the red nun buoy #64 (41°38′48″ N, 83°31′58″), then south/south-east back to the point of origin at the bow of the museum ship SS WILLIS B. BOYER. (NAD 83).

(ii) *Expected date:* One evening during the first week in September. The exact dates and times for this event will be determined annually.

(26) Rossford Labor Day Fireworks, Rossford, OH:

(i) *Location:* All waters of the Maumee River, within a 350-yard radius of the fireworks launch site located at position 41°36′58″ N, 83°33′56″ W. (NAD 83). This position is located at Veterans Memorial Park.

(ii) *Expected date:* One evening during the first week in September. The exact dates and times for this event will be determined annually.

(27) Lakeside Labor Day Fireworks, Lakeside, OH:

(i) *Location:* All waters of Lake Erie, within a 560-foot radius of the fireworks launch site located at position 41°32′52″ N, 82°45′03″ W. (NAD 83). This position is located at the Lakeside Association Dock.

(ii) *Expected date:* One evening during the first week in September. The exact dates and times for this event will be determined annually.

(28) Catawba Island Club Fireworks, Catawba Island, OH:

(i) *Location:* All waters of Lake Erie, within a 300-yard radius of the fireworks launch site located at position 41°34′20″ N, 82°51′18″ W. (NAD 83). This position is located at the northwest end of the Catawba Cliffs Harbor Light Pier.

(ii) *Expected date:* One evening during the first week in September. The exact dates and times for this event will be determined annually.

(29) Bay-Rama Fishfly Festival Fireworks, New Baltimore, MI:

(i) *Location:* All waters of Lake St. Clair-Anchor Bay, off New Baltimore City Park, within a 300-yard radius of the fireworks launch site located at position 42°41′ N, 082°44′ W (NAD 83).

(ii) *Expected date:* One evening during the first week in June. The exact dates and times for this event will be determined annually.

(30) Lake Erie Metropark Fireworks, Gibraltar, MI:

(i) *Location:* All waters of Lake Erie, off Lake Erie Metro Park, within a 300-yard radius of the fireworks launch site

located at position 42°03′ N, 083°11′W (NAD 83). This position is located off the Brownstown Wave pool area.

(ii) *Expected date:* One evening during the first week in July. The exact dates and times for this event will be determined annually.

(31) City of St. Clair Fireworks, St. Clair, MI:

(i) *Location:* All waters off the St. Clair River near St. Clair City Park, within a 300-yard radius of the fireworks launch site located at position 42°49′ N, 082°29′ W (NAD 83).

(ii) *Expected date:* One evening during the first week in July. The exact dates and times for this event will be determined annually.

(32) Oscoda Township Fireworks, Oscoda, MI:

(i) *Location:* All waters of Lake Huron, off the DNR Boat Launch near the mouth of the Au Sable River within a 300-yard radius of the fireworks launch site located at position 44°19′ N, 083°25′ W (NAD 83).

(ii) *Expected date:* One evening during the first week in July. The exact dates and times for this event will be determined annually.

(33) Port Austin Fireworks, Port Austin, MI:

(i) *Location:* All waters of Lake Huron, off the Port Austin break wall within a 300-yard radius of the fireworks launch site located at position 42°03′ N, 082°40′ W. (NAD 83).

(ii) *Expected date:* One evening during the first week in July. The exact dates and times for this event will be determined annually.

(34) City of Wyandotte Fireworks, Wyandotte, MI:

(i) *Location:* All waters of the Detroit River, off the break wall between Oak and Van Alstyne St., within a 300-yard radius of the fireworks launch site located at position 42°12′ N, 083°09′ W. (NAD 83).

(ii) *Expected date:* One evening during the first week in July. The exact dates and times for this event will be determined annually.

(35) Grosse Pointe Farms Fireworks, Grosse Pointe Farms, MI:

(i) *Location:* All waters of Lake St. Clair, within a 300-yard radius of the fireworks barge located at position 42°23′ N, 082°52′ W. (NAD 83). This position is located 300 yards east of Grosse Pointe Farms, MI.

(ii) *Expected date:* One evening during the first week in July. The exact dates and times for this event will be determined annually.

(36) Caseville Fireworks, Caseville, MI:

(i) *Location:* All waters of Saginaw Bay, within a 300-yard radius of the fireworks launch site located at position 43°56.9′ N, 083°17.2′ W. (NAD 83). This position is located off the Caseville break wall.

(ii) *Expected date:* One evening during the first week in July. The exact dates and times for this event will be determined annually.

(37) Algonac Pickerel Tournament Fireworks, Algonac, MI:

(i) *Location:* All waters of the St. Clair River, within a 300-yard radius of the fireworks barge located at position 41°37′ N, 082°32′ W. (NAD 83). This position is located between Algonac and Russell Island, St. Clair River-North Channel.

(ii) *Expected date:* One evening during the first week in July. The exact dates and times for this event will be determined annually.

(38) Port Sanilac Fireworks, Port Sanilac, MI:

(i) *Location:* All waters of Lake Huron within a 300-yard radius of the fireworks launch site located at position 43°25′ N, 082°31′ W. (NAD 83). This position is located at the South Harbor Break wall in Port Sanilac.

(ii) *Expected date:* One evening during the first week in July. The exact dates and times for this event will be determined annually.

(39) St. Clair Shores Fireworks, St. Clair Shores, MI:

(i) *Location:* All waters of Lake St. Clair within a 300-yard radius of the fireworks barge located at position 42°32′ N, 082°51′ W. (NAD 83). This position is located 1000 yards east of Veteran's Memorial Park, St. Clair Shores.

(ii) *Expected date:* One evening during the first week in July. The exact dates and times for this event will be determined annually.

(40) Port Huron 4th of July Fireworks, Port Huron, MI:

(i) *Location:* All waters of the Black River within a 300-yard radius of the

fireworks barge located at position 42°58′ N, 082°25′ W. (NAD 83). This position is located 300 yards east of 223 Huron Ave., Black River.

(ii) *Expected date:* One evening during the first week in July. The exact dates and times for this event will be determined annually.

(41) Grosse Pointe Yacht Club 4th of July Fireworks, Grosse Pointe Shores, MI:

(i) *Location:* All waters of Lake St. Clair within a 300-yard radius of the fireworks barge located at position 42°25′ N, 082°52′ W. (NAD 83). This position is located 400 yards east of the Grosse Pointe Yacht Club seawall, Lake St. Clair.

(ii) *Expected date:* One evening during the first week in July. The exact dates and times for this event will be determined annually.

(42) Lexington Independence Festival Fireworks, Lexington, MI:

(i) *Location:* All waters of Lake Huron within a 300-yard radius of the fireworks barge located at position 43°13′ N, 082°30′ W. (NAD 83). This position is located 300 yards east of the Lexington break wall, Lake Huron.

(ii) *Expected date:* One evening during the first week in July. The exact dates and times for this event will be determined annually.

(43) City of Ecorse Water Festival Fireworks, Ecorse, MI:

(i) *Location:* All waters of the Detroit River within a 300-yard radius of the fireworks barge located at position 41°14′ N, 083°09′ W. (NAD 83). This position is located in the Ecorse Channel at the northern end of Mud Island.

(ii) *Expected date:* One evening during the first week in July. The exact dates and times for this event will be determined annually.

(44) Grosse Ile Yacht Club Fireworks, Grosse Ile, MI:

(i) *Location:* All waters of the Detroit River within a 300-yard radius of the fireworks launch site located at position 42°05′ N, 083°09′ W. (NAD 83). This position is located in front of the Grosse Ile Yacht Club.

(ii) *Expected date:* One evening during the first week in July. The exact dates and times for this event will be determined annually.

(45) Trenton Fireworks, Trenton, MI:

(i) *Location:* All waters of the Detroit River within a 300-yard radius of the fireworks barge located at position 42°09′ N, 083°10′ W. (NAD 83). This position is located 200 yards east of Trenton in the Trenton Channel near Trenton, MI.

(ii) *Expected date:* One evening during the first week in July. The exact dates and times for this event will be determined annually.

(46) Belle Maer Harbor 4th of July Fireworks, Harrison Township, MI:

(i) *Location:* All waters of Lake St. Clair within a 300-yard radius of the fireworks barge located at position 42°36′ N, 082°47′ W. (NAD 83). This position is located 400 yards east of Belle Maer Harbor, Lake St. Clair.

(ii) *Expected date:* One evening during the first week in July. The exact dates and times for this event will be determined annually.

(47) Tawas City 4th of July Fireworks, Tawas, MI:

(i) *Location:* All waters of Lake Huron within a 300-yard radius of the fireworks launch site located at position 44°13′ N, 083°30′ W. (NAD 83). This position is located off the Tawas City Pier.

(ii) *Expected date:* One evening during the first week in July. The exact dates and times for this event will be determined annually.

(48) Venetian Festival Boat Parade and Fireworks, St. Clair Shores, MI:

(i) *Location:* All waters of Lake St. Clair within a 300-yard radius of the fireworks barge located at position 42°28′ N, 082°52′ W. (NAD 83). This position is located 600 yards off Jefferson Beach Marina, Lake St, Clair.

(ii) *Expected date:* One evening during the second week in August. The exact dates and times for this event will be determined annually.

(49) Celebrate America Fireworks, Grosse Pointe Farms, MI:

(i) *Location:* All waters of Lake St. Clair within a 500-foot radius of the fireworks launch site located at position 42°22′58″ N, 082°53′46″ W. (NAD 83). This area is located southeast of the Grosse Pointe Yacht Club.

(ii) *Expected date:* One evening during the third week in June. The exact dates and times for this event will be determined annually.

(50) Target Fireworks, Detroit, MI:

(i) *Location:* The following three areas are safety zones:

(A) The first safety zone area will encompass all waters of the Detroit River bounded by the arc of a circle with a 900-foot radius with its center in position 42°19′23″ N, 083°04′34″ W.

(B) The second safety zone area will encompass a portion of the Detroit River bounded on the South by the International Boundary line, on the West by 083°03′30″ W, on the North by the City of Detroit shoreline and on the East by 083°01′15″ W.

(C) The third safety zone will encompass a portion of the Detroit River bounded on the South by the International Boundary line, on the West by the Ambassador Bridge, on the North by the City of Detroit shoreline, and on the East by the downstream end of Belle Isle. The Captain of the Port Detroit has determined that vessels below 65 feet in length may enter this zone.

(ii) *Expected date:* One evening during the last week in June. The exact dates and times for this event will be determined annually.

(51) Sigma Gamma Association Fireworks, Grosse Pointe Farms, MI:

(i) *Location:* All waters of Lake St. Clair, within a 300-yard radius of the fireworks launch site located at position 42°27′ N, 082°52′ W (NAD 83) This position is located in the vicinity of Ford's Cove.

(ii) *Expected date:* One evening during the last week in June. The exact dates and times for this event will be determined annually.

(52) Southside Summer Fireworks, Port Huron, MI:

(i) *Location:* All waters of St. Clair River within a 300 yard radius of position 42°57′55″ N, 082°25′20″ W. This position is located on the shore of the St. Clair River in the vicinity of Oak and 3rd Street, Port Huron, MI. All geographic coordinates are North American Datum of 1983 (NAD 83).

(ii) *Expected date:* One evening during the last week in June. The exact dates and times for this event will be determined annually.

(53) Bay City Fireworks Festival, Bay City, MI:

(i) *Location:* All waters of the Saginaw River near Bay City, MI, from the Veteran's Memorial Bridge, located at position 43°35.8′ N; 083°53.6′ W, south approximately 1000 yards to the River Walk Pier, located at position 43°35.3′ N; 083°53.8′ W. All geographic coordinates are North American Datum of 1983 (NAD 83).

(ii) *Expected date:* Three evenings during the first week in July. The exact dates and times for this event will be determined annually.

(54) Toledo 4th of July Fireworks, Toledo, OH:

(i) *Location:* All waters of the Maumee River within a 300-yard radius of the fireworks launch site located at position 41°38′35″ N, 083°31′54″ W. All geographic coordinates are North American Datum of 1983 (NAD 83).

(ii) *Expected date:* One evening during the first week in July. The exact dates and times for this event will be determined annually.

(55) Toledo Labor Day Fireworks, Toledo, OH:

(i) *Location:* All waters of the Maumee River within a 300-yard radius of the fireworks launch site located at position 41°38′35″ N, 083°31′54″ W. All geographic coordinates are North American Datum of 1983 (NAD 83).

(ii) *Expected date:* One evening during the first week in September. The exact dates and times for this event will be determined annually.

(56) Catawba Island Club Fireworks; Catawba Island, OH:

(i) *Location.* All waters of Lake Erie within a 250-yard radius of the fireworks launch site located at position 41–34′–18.10″ N, 082–51′–18.70″ W (NAD 83).

(ii) *Expected date.* This safety zone will be enforced one evening during the last week in May.

(57) Put-In-Bay Chamber of Commerce Fireworks, Put-In-Bay, OH:

(i) *Location.* All waters of Lake Erie within a 1,000-foot radius of the fireworks launch site located at position 41–39′–19″ N, 082–48′–57″ W (NAD 83). This area is located in the Put-In-Bay Harbor.

(ii) *Expected dates.* This safety zone will be enforced one evening during the third week in June, one evening during the last week in June, one evening during the first week in September, and one evening during the second week in September.

(58) Bay Point Fireworks Display, Marblehead, OH:

(i) *Location*. All waters of Lake Erie within a 250-yard radius of the fireworks launch site located at position 41–30′–29.23″ N, 082–43′–8.45″ W (NAD 83).

(ii) *Expected date*. This safety zone will be enforced one evening during the first week in July.

(59) Marysville Days Fireworks, Marysville, MI:

(i) *Location*. All waters of the St. Clair River within a 600 foot radius of the fireworks launch site located on land at position 42–54′–25″ N, 082–27′–58″ W (NAD 83).

(ii) *Expected date*. This safety zone will be enforced one evening during the last week in June.

(60) *Revolution 3 Triathlon, Lake Erie, Sandusky Bay, Cedar Point, OH—*

(i) *Locations*. All waters of Lake Erie within positions 41–29′–00.04″ N 082–40′–48.16″ W to 41–29′–19.28″ N 082–40′–38.97″ W to 41–29′–02.51″ N 082–40′–20.82″ W to 41–28′–45.52″ N 082–40′–35.75″ W then following the shoreline to the point of origin. In the event that weather requires triathlon organizers to change the locations of the swimming leg, the safety zones will alternatively encompass all waters of Lake Erie, Sandusky Bay, Cedar Point, OH extending outward 100 yards on either side of a line running between 41–28′–38.59″ N 082–41′–10.51″ W and 41–28′–17.25″ N 082–40′–54.09″ W (NAD 83) running adjacent to the Cedar Point Marina.

(ii) *Enforcement period:* Two consecutive mornings during the first or second weekend in September. Exact dates and times will be determined annually and the Captain of the Port will publish a Notice of Enforcement to inform the public.

(b) *Definitions*. The following definitions apply to this section:

(1) Designated Representative means any Coast Guard commissioned, warrant, or petty officer designated by the Captain of the Port Detroit to monitor a safety zone, permit entry into the zone, give legally enforceable orders to persons or vessels within the zones, and take other actions authorized by the Captain of the Port.

(2) Public vessel means vessels owned, chartered, or operated by the United States, or by a State or political subdivision thereof.

(c) *Regulations*. (1) In accordance with the general regulations in §165.23 of this part, entry into, transiting, or anchoring within this safety zone is prohibited unless authorized by the Captain of the Port Detroit, or his designated representative.

(2)(i) These safety zones are closed to all vessel traffic, except as may be permitted by the Captain of the Port Detroit or his designated representative.

(ii) All persons and vessels must comply with the instructions of the Coast Guard Captain of the Port or his designated representative.

(iii) Upon being hailed by the U.S. Coast Guard by siren, radio, flashing light or other means, the operator of a vessel shall proceed as directed.

(3)(i) All vessels must obtain permission from the Captain of the Port or his designated representative to enter, move within, or exit the safety zone established in this section when this safety zone is enforced.

(ii) Vessels and persons granted permission to enter the safety zone must obey all lawful orders or directions of the Captain of the Port or a designated representative.

(iii) While within a safety zone, all vessels must operate at the minimum speed necessary to maintain a safe course.

(d) *Exemption*. Public vessels, as defined in paragraph (b) of this section, are exempt from the requirements in this section.

(e) *Waiver*. For any vessel, the Captain of the Port Detroit or his designated representative may waive any of the requirements of this section, upon finding that operational conditions or other circumstances are such that application of this section is unnecessary or impractical for the purposes of public or environmental safety.

(f) *Notification*. The Captain of the Port Detroit will notify the public that the safety zones in this section are or will be enforced by all appropriate means to the affected segments of the public including publication in the FEDERAL REGISTER as practicable, in accordance with 33 CFR 165.7(a). Such means of notification may also include,

but are not limited to Broadcast Notice to Mariners or Local Notice to Mariners. The Captain of the Port may issue a Broadcast Notice to Mariners notifying the public when enforcement of the safety zone established by this section is cancelled if deemed necessary.

[USCG–2008–0218, 73 FR 46197, Aug. 8, 2008, as amended by USCG–2010–0126, 75 FR 32668, June 9, 2010; USCG–2012–0306, 77 FR 37315, June 21, 2012; USCG–2012–0313, 77 FR 42178, July 18, 2012; USCG–2012–0730, 79 FR 16677, Mar. 26, 2014]

§ 165.943 Annual events requiring safety zones in the Captain of the Port Duluth zone.

(a) *Safety zones.* The following areas are designated safety zones:

(1) *Bridgefest Regatta Fireworks; Houghton, MI*—(i) *Location.* All waters of the Keweenaw Waterway bounded by the arc of a circle with a 300-foot radius from the fireworks launch site with its center in position 47°07′28.35″ N, 088°35′01.78″ W.

(ii) *Enforcement date and time.* This event historically occurs in mid June. The Captain of the Port Duluth, will establish enforcement dates that will be announced with a Notice of Enforcement and marine information broadcast.

(2) *Lake Superior Dragon Boat Festival Fireworks; Superior, WI*—(i) *Location.* All waters of Superior Bay, WI within a 150-foot radius with its center at 46°43′23.52″ N 092°03′45.19″ W.

(ii) *Enforcement date and time.* This event historically occurs in late August. The Captain of the Port Duluth, will establish enforcement dates that will be announced with a Notice of Enforcement and marine information broadcast.

(3) *Duluth Fourth Fest Fireworks; Duluth, MN*—(i) *Location.* All U.S. navigable waters of the Duluth Harbor Basin Northern Section within a 900-foot radius of position 46°46′19.00″ N, 092°06′11.00″ W.

(ii) *Enforcement date and time.* This event historically occurs during the 4th of July week. The Captain of the Port Duluth, will establish enforcement dates that will be announced with a Notice of Enforcement and marine information broadcast.

(4) *Cornucopia Fireworks; Cornucopia, WI*—(i) *Location.* All waters of the area bounded by a circle with a 300-foot radius surrounding the fireworks launch site with its center in position 46°51′35.00″ N, 091°06′10.00″ W.

(ii) *Enforcement date and time.* This event historically occurs the week before, after or during 4th of July week. The Captain of the Port Duluth, will establish enforcement dates that will be announced with a Notice of Enforcement and marine information broadcast.

(5) *LaPointe Fireworks; LaPointe, WI*—(i) *Location.* All waters of Lake Superior bounded by the arc of a circle with a 375-foot radius from the fireworks launch site with its center in position 46°46′40.10″ N, 090°47′22.00″ W.

(ii) *Enforcement date and time.* This event historically occurs during the 4th of July week. The Captain of the Port Duluth, will establish enforcement dates that will be announced with a Notice of Enforcement and marine information broadcast.

(6) *Ashland Fireworks; Ashland, WI*—(i) *Location.* All waters of the Lake Superior bounded by the arc of a circle with a 600-foot diameter from the fireworks launch site with its center in position 46°35′50.37″ N, 090°52′59.82″ W.

(ii) *Enforcement date and time.* This event historically occurs during the 4th of July week. The Captain of the Port Duluth, will establish enforcement dates that will be announced with a Notice of Enforcement and marine information broadcast.

(7) *Point to LaPointe Swim; LaPointe, WI*—(i) *Location.* All waters between Bayfield, WI and Madeline Island, WI within an imaginary line created by the following coordinates: 46°48′50.97″ N, 090°48′44.28″ W, moving southeast to 46°46′44.90″ N, 090°47′33.21″ W, then moving northeast to 46°46′52.51″ N 090°47′17.14″ W, then moving northwest to 46°49′03.23″ N 090°48′25.12″ W and finally running back to the starting point.

(ii) *Enforcement date and time.* This event historically occurs in early August. The Captain of the Port Duluth, will establish enforcement dates that will be announced with a Notice of Enforcement and marine information broadcast.

(8) *Superior Man Triathlon; Superior, WI*—(i) *Location*. All waters of the Duluth Harbor Basin, Northern Section, including the Duluth Entry encompassed in an imaginary line beginning at point 46°46′36.12″ N 092°06′06.99″ W, running southeast to 46°46′32.75″ N 092°06′01.74″ W, running northeast to 46°46′45.92″ N 092°05′45.18″ W, running northwest to 46°46′49.47″ N 092°05′49.35″ W and finally running southwest back to the starting point.

(ii) *Enforcement date and time*. This event historically occurs in late August. The Captain of the Port Duluth, will establish enforcement dates that will be announced with a Notice of Enforcement and marine information broadcast.

(b) *Regulations*. (1) In accordance with the general regulations in § 165.23 of this part, entry into, transiting, or anchoring in this safety zone is prohibited unless authorized by the Captain of the Port Duluth, or the designated on-scene representative.

(2) This safety zone is closed to all vessel traffic except as authorized by the Captain of the Port Duluth, or the designated on-scene representative.

(3) The ''on-scene representative'' of the Captain of the Port Duluth, is any Coast Guard commissioned, warrant, or petty officer who has been designated to act on behalf of the Captain of the Port Duluth. The on-scene representative of the Captain of the Port Duluth will be aboard either a Coast Guard or Coast Guard Auxiliary vessel. The Captain of the Port Duluth, or the designated on-scene representative may be contacted via VHF Channel 16.

(4) Vessel operators desiring to enter or operate within the safety zone shall contact the Captain of the Port Duluth, or the designated on-scene representative to obtain permission to do so. Vessel operators given authorization to enter or operate in the safety zone must comply with all directions given to them by the Captain of the Port Duluth, or the on-scene representative.

[USCG–2013–0214, 78 FR 48804, Aug. 12, 2013]

ELEVENTH COAST GUARD DISTRICT

§ 165.T11–504 Safety zone; Independence Day Fireworks Celebration for the City of Richmond, Richmond Inner Harbor, Richmond, CA.

(a) *Location*. This temporary safety zone is established for the navigable waters of Richmond Inner Harbor near Richmond, CA as depicted in National Oceanic and Atmospheric Administration (NOAA) Chart 18649. From 9:30 p.m. until 9:50 p.m. on July 3, 2012, the temporary safety zone will encompass the navigable waters around the fireworks launch site in position 37°54′34″ N, 122°21′17″ W (NAD 83) within a radius of 420 feet.

(b) *Enforcement period*. The zone described in paragraph (a) of this section will be enforced from 9:30 p.m. through 10 p.m. on July 3, 2012. The Captain of the Port San Francisco (COTP) will notify the maritime community of periods during which this zone will be enforced via Broadcast Notice to Mariners in accordance with 33 CFR 165.7.

(c) *Definitions*. As used in this section, ''designated representative'' means a Coast Guard Patrol Commander, including a Coast Guard coxswain, petty officer, or other officer on a Coast Guard vessel or a Federal, State, or local officer designated by or assisting the COTP in the enforcement of the safety zone.

(d) *Regulations*. (1) Under the general regulations in 33 CFR part 165, subpart C, entry into, transiting or anchoring within this safety zone is prohibited unless authorized by the COTP or a designated representative.

(2) The safety zone is closed to all vessel traffic, except as may be permitted by the COTP or a designated representative.

(3) Vessel operators desiring to enter or operate within the safety zone must contact the COTP or a designated representative to obtain permission to do so. Vessel operators given permission to enter or operate in the safety zone must comply with all directions given to them by the COTP or a designated representative. Persons and vessels may request permission to enter the safety zone on VHF–23A or through the

24-hour Command Center at telephone (415) 399–3547.

[USCG–2012–0419, 77 FR 39417, July 3, 2012]

§ 165.T11–589 Safety zone; SFOBB Demolition Safety Zone, San Francisco, CA.

(a) *Location*. This temporary safety zone is established in the navigable waters of the San Francisco Bay near Yerba Buena Island, California as depicted in National Oceanic and Atmospheric Administration (NOAA) Chart 18650. The safety zone will encompass the navigable waters around the SFOBB within 100 yards beginning at Yerba Buena Island and ending at the ''I'' Pier.

(b) *Enforcement period*. The zone described in paragraph (a) of this section will be in effect from 6 a.m. to 7 p.m. daily from September 1, 2013 until December 30, 2014. The Captain of the Port San Francisco (COTP) will notify the maritime community of periods during which this zone will be enforced via Broadcast Notice to Mariners in accordance with 33 CFR 165.7.

(c) *Definitions*. As used in this section, ''designated representative'' means a Coast Guard Patrol Commander, including a Coast Guard coxswain, petty officer, or other officer on a Coast Guard vessel or a Federal, State, or local officer designated by or assisting the COTP in the enforcement of the safety zone.

(d) *Regulations*. (1) Under the general regulations in 33 CFR part 165, subpart C, entry into, transiting or anchoring within this safety zone is prohibited unless authorized by the COTP or a designated representative.

(2) The safety zone is closed to all vessel traffic, except as may be permitted by the COTP or a designated representative.

(3) Vessel operators desiring to enter or operate within the safety zone must contact the COTP or a designated representative to obtain permission to do so. Vessel operators given permission to enter or operate in the safety zone must comply with all directions given to them by the COTP or a designated representative. Persons and vessels may request permission to enter the safety zone on VHF–23A or through the 24-hour Command Center at telephone (415) 399–3547.

EFFECTIVE DATE NOTE: By USCG–2013–0654, 78 FR 54173, Sept. 3, 2013, temporary § 165.T11–589 was added, effective Sept. 1, 2013, through Dec. 30, 2014.

§ 165.T11–630 Safety zone; Giants Enterprises Fireworks Display, San Francisco Bay, San Francisco, CA.

(a) *Location*. This temporary safety zone is established in the navigable waters of the San Francisco Bay near Pier 48 in San Francisco, CA as depicted in National Oceanic and Atmospheric Administration (NOAA) Chart 18650. From 11 a.m. until 10:50 p.m. on May 21, 2014, the temporary safety zone applies to the nearest point of the fireworks barge within a radius of 100 feet during the loading, transit, and arrival of the fireworks barge from Pier 50 to the launch site near Pier 48 in approximate position 37°46′40″ N, 122°22′58″ W (NAD83). From 10:50 p.m. until 11 p.m. on May 21, 2014, the temporary safety zone will increase in size and encompass the navigable waters around and under the fireworks barge in approximate position 37°46′40″ N, 122°22′58″ W (NAD83) within a radius of 700 feet.

(b) *Enforcement period*. The zone described in paragraph (a) of this section will be enforced from 11 a.m. through 11 p.m. on May 21, 2014. The Captain of the Port San Francisco (COTP) will notify the maritime community of periods during which this zone will be enforced via Broadcast Notice to Mariners in accordance with 33 CFR 165.7.

(c) *Definitions*. As used in this section, ''designated representative'' means a Coast Guard Patrol Commander, including a Coast Guard coxswain, petty officer, or other officer on a Coast Guard vessel or a Federal, State, or local officer designated by or assisting the COTP in the enforcement of the safety zone.

(d) *Regulations*. (1) Under the general regulations in 33 CFR Part 165, Subpart C, entry into, transiting or anchoring within this safety zone is prohibited unless authorized by the COTP or a designated representative.

(2) The safety zone is closed to all vessel traffic, except as may be permitted by the COTP or a designated representative.

(3) Vessel operators desiring to enter or operate within the safety zone must contact the COTP or a designated representative to obtain permission to do so. Vessel operators given permission to enter or operate in the safety zone must comply with all directions given to them by the COTP or a designated representative. Persons and vessels may request permission to enter the safety zone on VHF–23A or through the 24-hour Command Center at telephone (415) 399–3547.

[USCG–2014–0174, 79 FR 23916, Apr. 29, 2014]

§ 165.1101 Security Zone: San Diego Bay, CA.

(a) *Location*. The following area is a security zone: the water area within Naval Station, San Diego enclosed by the following points: Beginning at 32°41′16.5″ N, 117°08′01″ W (Point A); thence running southwesterly to 32°40′58.3″ N, 117°08′11.0″ W (Point B); to 32°40′36.0″ N 117°07′49.1″ W (Point C); to 32°40′17.0′ N, 117°07′34.6″ W (Point D); to 32°39′36.4″ N, 117°07′24.8″ W (Point E); to 32°39′38.5″ N 117°07′06.5″ W, (Point F); thence running generally northwesterly along the shoreline of the Naval Station to the place of the beginning. All coordinates referenced use datum: NAD 1983.

(b) *Regulations*. (1) In accordance with the general regulations in § 165.33 of this part, entry into the area of this zone is prohibited unless authorized by the Captain of the Port San Diego; Commander, Naval Base San Diego; Commander, Navy Region Southwest; or the Commanding Officer, Naval Station, San Diego.

(2) Persons desiring to transit the area of the security zone may contact the Captain of the Port at telephone number 619–683–6495 or on VHF channel 16 (156.8 MHz) to seek permission to transit the area. If permission is granted, all persons and vessels must comply with the instructions of the Captain of the Port or his or her designated representative.

(c) *Authority*. In addition to 33 U.S.C. 1231 and 50 U.S.C. 191, the authority for this section includes 33 U.S.C. 1226.

(d) *Enforcement*. The U.S. Coast Guard may be assisted in the patrol and enforcement of this security zone by the U.S. Navy.

[COTP San Diego 04–019, 70 FR 2021, Jan. 12, 2005]

§ 165.1102 Security Zone; Naval Base Point Loma; San Diego Bay, CA.

(a) *Location*. The following area is a security zone: The water adjacent to the Naval Base Point Loma, San Diego, CA, enclosed by the following coordinates:

32°42′28.8″ N, 117°14′13.2″ W (Point A)
32°42′28.8″ N, 117°14′12.6″ W (Point B)
32°42′10.2″ N, 117°14′03.0″ W (Point C)
32°42′06.2″ N, 117°14′01.5″ W (Point D)
32°41′49.5″ N, 117°14′07.0″ W (Point E)
32°41′47.4″ N, 117°14′11.4″ W (Point F)
32°41′43.8″ N, 117°14′12.6″ W (Point G)
32°41′31.8″ N, 117°14′13.8″ W (Point H)
32°41′33.0″ N, 117°14′01.2″ W (Point I)
32°41′10.2″ N, 117°13′57.0″ W (Point J)
32°41′10.2″ N, 117°13′58.2″ W (Point K)

Thence running generally north along the shoreline to Point A.

(b) *Regulations*. (1) The general regulations governing security zones found in 33 CFR 165.33 apply to the security zone described in paragraph (a) of this section.

(2) Entry into, or remaining in, the areas of either zone is prohibited unless authorized by the Captain of the Port San Diego; Commanding Officer, Naval Base Point Loma; or Commander, Naval Region Southwest.

(3) Persons desiring to transit the area of the security zone may request permission from the Captain of the Port San Diego at telephone number (619) 278–7033 or on VHF channel 16 (156.8 MHz) or from either the Commanding Officer, Naval Base Point Loma or the Commanding Officer Navy Region Southwest by calling the Navy Port Operation Dispatch at telephone number (619) 556–1433 or on VHF–FM channels 16 or 12. If permission is granted, all persons and vessels must comply with the instructions of the Captain of the Port San Diego or his or her designated representative.

(c) *Definitions*. For purposes of this section: Captain of the Port San Diego, means the Commanding Officer of the Coast Guard Sector San Diego; Commander, Navy Region Southwest,

means Navy Region Commander responsible for the Southwest Region; Commanding Officer, Naval Base Point Loma, means the Installation Commander of the naval base located on Point Loma, San Diego, California; Designated Representative, means any U.S. Coast Guard commissioned, warrant, or petty officer who has been designated by the Captain of the Port San Diego to assist in the enforcement of the security zone described in paragraph (a) of this section.

(d) *Enforcement.* The U.S. Coast Guard may be assisted in the patrol and enforcement of the security zone described in paragraph (a) of this section by the U.S. Navy and local law enforcement agencies.

[USCG–2013–0580, 78 FR 72027, Dec. 2, 2013]

§ 165.1103 Security Zone; Naval Mine Anti Submarine Warfare Command; San Diego Bay, San Diego, CA.

(a) *Location.* (1) The following area is a security zone: The water adjacent to the Naval Mine Anti Submarine Warfare Command, bound by the following coordinates:

32°43′40.9″ N, 117°12′54.9″ W (A)
32°43′40.6″ N, 117°12′52.3″ W (B)
32°43′22.5″ N, 117°12′57.8″ W (C)
32°43′23.4″ N, 117°13′01.3″ W (D)

Thence running generally northwest along the shoreline to Point A.

(2) The proposed security zone at the Naval Mine Anti Submarine Warfare Command would be established to provide for the 100 feet of standoff distance.

(b) *Regulations.* (1) The general regulations governing security zones found in 33 CFR 165.33 apply to the security zone described in paragraph (a) of this section.

(2) Entry into, or remaining in, the areas of either zone is prohibited unless authorized by the Captain of the Port San Diego; Commanding Officer, Naval Mine Anti Submarine Warfare Command; or Commander, Naval Region Southwest.

(3) Persons desiring to transit the area of the security zone may request permission from the Captain of the Port San Diego at telephone number (619) 278–7033 or on VHF channel 16 (156.8 MHz) or from either the Commanding Officer, Naval Mine Anti Submarine Warfare Command or the Commander, Navy Region Southwest by calling the Navy Port Operation Dispatch at telephone number (619) 556–1433 or on VHF–FM channels 16 or 12. If permission is granted, all persons and vessels must comply with the instructions of the Captain of the Port San Diego or his or her designated representative.

(c) *Definitions.* For purposes of this section: Captain of the Port San Diego, means the Commanding Officer of the Coast Guard Sector San Diego; Commander, Navy Region Southwest, means Navy Region Commander responsible for the Southwest Region; Commanding Officer, Naval Mine Anti Submarine Warfare Command, means the Installation Commander of the naval base located on Point Loma, San Diego, California; Designated Representative, means any U.S. Coast Guard commissioned, warrant, or petty officer who has been designated by the Captain of the Port San Diego to assist in the enforcement of the security zone described in paragraph (a) of this section.

(d) *Enforcement.* The U.S. Coast Guard may be assisted in the patrol and enforcement of the security zone described in paragraph (a) of this section by the U.S. Navy and local law enforcement agencies.

[USCG–2013–0580, 78 FR 72028, Dec. 2, 2013]

§ 165.1104 Security Zone: San Diego Bay, CA.

(a) *Location.* The following area is a security zone: on the waters along the northern shoreline of Naval Base Coronado, the area enclosed by the following points: Beginning at 32°42′53.0″ N, 117°11′45.0 W (Point A); thence running northerly to 32°42′55.5″ N, 117°11′45.0″ W, (Point B); thence running easterly to 32°42′57.0″ N, 117°11′31.0″ W, (Point C); thence southeasterly to 32°42′42.0″ N, 117°11′04.0″ W (Point D); thence southeasterly to 32°42′21.0″ N, 117°10′47.0″ W (Point E) thence running southerly to 32°42′13.0″ N, 117°10′51.0″ W (Point F); thence running generally northwesterly along the shoreline of Naval Base Coronado to the place of beginning. All coordinates referenced use datum: NAD 1983.

(b) *Regulations.* (1) In accordance with the general regulations in Sec. 165.33 of this part, entry into the area of this zone is prohibited unless authorized by the Captain of the Port San Diego; Commander, Naval Base Coronado, or Commander, Navy Region Southwest.

(2) Persons desiring to transit the area of the security zone may contact the Captain of the Port at telephone number 619–683–6495 or on VHF channel 16 (156.8 MHz) to seek permission to transit the area. If permission is granted, all persons and vessels must comply with the instructions of the Captain of the Port or his or her designated representative.

(c) *Authority.* In addition to 33 U.S.C. 1231 and 50 U.S.C. 191, the authority for this section includes 33 U.S.C. 1226.

(d) *Enforcement.* The U.S. Coast Guard may be assisted in the patrol and enforcement of this security zone by the U.S. Navy.

[COTP San Diego, 68 FR 25290, May 12, 2003]

§ 165.1105 Security Zone: San Diego Bay, California.

(a) *Location.* (1) The following area is a security zone: The water area adjacent to Naval Air Station North Island, Coronado, California, and within 100 yards (91 meters) of Bravo Pier, and vessels moored thereto, bounded by the following points (when no vessel is moored at the pier):

(i) Latitude 32°41′53.0″ N, Longitude 117°13′33.6″ W;

(ii) Latitude 32°41′53.0″ N, Longitude 117°13′40.6″ W;

(iii) Latitude 32°41′34.0″ N, Longitude 117°13′40.6″ W;

(iv) Latitude 32°41′34.0″ N, Longitude 117°13′34.1″ W.

(2) Because the area of this security zone is measured from the pier and from vessels moored thereto, the actual area of this security zone will be larger when a vessel is moored at Bravo Pier.

(b) *Regulations.* In accordance with the general regulations in § 165.33 of this part, entry into the area of this zone is prohibited unless authorized by the Captain of the Port or the Commanding Officer, Naval Air Station North Island. Section 165.33 also contains other general requirements.

[COTP San Diego Reg. 85–11, 51 FR 3776, Jan. 30, 1986, as amended at 52 FR 8893, Mar. 20, 1987. Redesignated by USCG–2001–9286, 66 FR 33642, June 25, 2001]

§ 165.1106 San Diego Bay, California—safety zone.

(a) The waters of San Diego Bay enclosed by the following boundaries are a safety zone:

From a point located on the boundary of Coast Guard Air Station San Diego, California at latitude 32°43′37.2″ N, longitude 117°10′45.0″ W (point A), for a point of beginning; thence southeasterly to latitude 32°43′36.2″ N, longitude 117°10′41.5″ W (point B); thence southwesterly to latitude 32°43′20.2″ N, longitude 117°10′49.5″ W (point C); thence northwesterly to latitude 32°43′25.7″ N, longitude 117°11′04.6″ W (point D); thence northeasterly to latitude 32°43′35.7″ N, longitude 117°10′59.5″ W (point E); thence generally easterly along the air station boundary to the point of beginning (point A).

(b)(1) In accordance with the general regulations in § 165.23 of this part, entry into the area of this zone is prohibited unless authorized by the Captain of the Port, except as provided for below.

(2) Vessels may transit the area of this safety zone without permission, but may not anchor, stop, remain within the zone, or approach within 100 yards (92 meters) of the land area of Coast Guard Air Station San Diego or structures attached thereto.

[CGD 85–034, 50 FR 14703, Apr. 15, 1985 and COTP San Diego Reg. 85–06, 50 FR 38003, Sept. 19, 1985. Redesignated by USCG–2001–9286, 66 FR 33642, June 25, 2001]

§ 165.1107 San Diego Bay, California.

(a) *Location.* The area encompassed by the following geographic coordinates is a regulated navigation area:

32°41′24.6″ N	117°14′21.9″ W
32°41′34.2″ N	117°13′58.5″ W
32°41′34.2″ N	117°13′37.2″ W

Thence south along the shoreline to

32°41′11.2″ N	117°13′31.3″ W
32°41′11.2″ N	117°13′58.5″ W

Thence north along the shoreline to the point of origin.

Datum: NAD 1983.

(b) *Regulations.* (1) During submarine docking/undocking operations at the U.S. Naval Submarine Base on Ballast Point, San Diego Bay, California, mariners transiting within the regulated navigation area shall proceed at a speed that generates no wake from their vessel.

(2) The Coast Guard will issue a Broadcast Notice to Mariners, and if time permits a Local Notice to Mariners, to inform the maritime community of the dates and times of the submarine docking/undocking operations covered by paragraph (b)(1).

(3) The master and/or operator of a vessel within the regulated navigation area shall comply with any other orders or directions issued by the Coast Guard as required for the safety of the submarine docking/undocking operations covered by paragraph (b)(1).

[CGD11–90–07, 56 FR 14645, Apr. 11, 1991; 56 FR 40360, Aug. 14, 1991, as amended by USCG–1998–3799, 63 FR 35533, June 30, 1998. Redesignated by USCG–2001–9286, 66 FR 33642, June 25, 2001]

§ 165.1108 Security Zones; Cruise Ships, Port of San Diego, California.

(a) *Definition.* ''Cruise ship'' as used in this section means a passenger vessel, except for a ferry, 100 gross tons or more, authorized to carry more than 12 passengers for hire; capable of making international voyages lasting more than 24 hours, any part of which is on the high seas; and for which passengers are embarked, disembarked or at a port of call in the San Diego port.

(b) *Location.* The following areas are security zones: All navigable waters, extending from the surface to the sea floor, within a 100-yard radius around any cruise ship that is located within the San Diego port area landward of the sea buoys bounding the Port of San Diego.

(c) *Regulations.* Under regulations in 33 CFR part 165, subpart D, a person or vessel may not enter into or remain in the security zones created by this section unless authorized by the Coast Guard Captain of the Port, San Diego (COTP) or a COTP designated representative. Persons desiring to transit these security zones may contact the COTP at telephone number (619) 278–7033 or on VHF–FM channel 16 (156.8 MHz) to seek permission to transit the area. If permission is granted, all persons and vessels must comply with the instructions of the Captain of the Port or his or her designated representative.

(d) *Authority.* In addition to 33 U.S.C. 1231 and 50 U.S.C. 191, the authority for this section includes 33 U.S.C. 1226.

(e) *Enforcement.* The U.S. Coast Guard may be assisted in the patrol and enforcement of the security zones by the San Diego Harbor Police.

[COTP San Diego 02–026, 68 FR 1008, Jan. 8, 2003, as amended by USCG–2011–0038, 76 FR 15218, Mar. 21, 2011]

§ 165.1110 Security Zone: Coronado Bay Bridge, San Diego, CA.

(a) *Location.* All navigable waters of San Diego Bay, from the surface to the sea floor, within 25 yards of all piers, abutments, fenders and pilings of the Coronado Bay Bridge. These security zones will not restrict the main navigational channel nor will it restrict vessels from transiting through the channel.

(b) *Regulations.* (1) Under § 165.33, entry into, transit through, loitering, or anchoring within any of these security zones by all persons and vessels is prohibited, unless authorized by the Captain of the Port, or his designated representative. Mariners seeking permission to transit through a security zone may request authorization to do so from Captain of the Port or his designated representative. The Coast Guard can be contacted on San Diego Bay via VHF-FM channel 16.

(2) Vessels may enter a security zone if it is necessary for safe navigation and circumstances do not allow sufficient time to obtain permission from the Captain of the Port.

[COTP San Diego 04–015, 69 FR 43915, July 23, 2004]

§ 165.1120 Security Zone; Naval Amphibious Base, San Diego, CA.

(a) *Location.* The following area is a security zone: the waters of San Diego Bay, enclosed by lines connecting the following points: Beginning at 32°40′30.0″ N, 117°10′03.0″ W (Point A); thence running northeasterly to 32°40′54.0″ N, 117°09′35.5″ W (Point B); thence running northeasterly to 32°40′55.0″ N, 117°09′27.0″ W (Point C);

thence running southeasterly to 32°40′43.0″ N, 117°09′09.0″ W (Point D); thence running southerly to 32°40′39.0″ N, 117°09′08.0″ (Point E); thence running southwesterly to 32°40′30.0″ N, 117°09′12.9″ W (Point F); thence running a short distance to 32°40′29.0″ N, 117°09′14.0″ W (Point G); thence running southwesterly to 32°40′26.0″ N, 117°09′17.0″ W (Point H); thence running northwesterly to the shoreline to 32°40′ 31.0″ N, 117°09′ 22.5″ W (Point I), thence running along the shoreline to the beginning point.

(b) *Regulations.* In accordance with the general regulations in § 165.33 of this part, entry into the area of this zone is prohibited unless authorized by the Captain of the Port or the Commander, Navy Region Southwest.

(c) *Enforcement.* The U.S. Coast Guard may be assisted in the patrol and enforcement of this security zone by the U.S. Navy.

[CGD11–01–011, 67 FR 4661, Jan. 31, 2002]

§ 165.1121 [Reserved]

§ 165.1122 San Diego Bay, Mission Bay and their Approaches—Regulated navigation area.

(a) *Regulated navigation area.* The following area is a regulated navigation area (RNA): All waters of San Diego Bay, Mission Bay, and their approaches encompassed by a line commencing at Point La Jolla (32°51′06″ N, 117°16′42″ W); thence proceeding seaward on a line bearing 255° T to the outermost extent of the territorial seas; thence proceeding southerly along the outermost extent of the territorial seas to the intersection of the maritime boundary with Mexico; thence proceeding easterly, along the maritime boundary with Mexico to its intersection with the California coast; thence proceeding northerly, along the shoreline of the California coast—and including the inland waters of San Diego Bay and Mission Bay, California, shoreward of the COLREGS Demarcation Line —back to the point of origin. All coordinates reference 1983 North American Datum (NAD 83).

(b) *Definitions.* As used in this section—

COLREGS Demarcation Line means the line described at 33 CFR 80.1104 or 80.1106.

Public vessel means a vessel that is owned or demise—(bareboat) chartered by the government of the United States, by a State or local government, or by the government of a foreign country and that is not engaged in commercial service.

Vessel means every description of watercraft or other artificial contrivance used, or capable of being used, as a means of transportation on water other than a public vessel.

(c) *Applicability.* This section applies to all vessels of 100 gross tons (GT) or more, including tug and barge combinations of 100 GT or more (combined), operating within the RNA, with the exception of public vessels, vessels not intending to cross the COLREGS Demarcation Line and enter San Diego Bay or Mission Bay, and any vessels exercising rights under principles of international law, including innocent passage or force majeure, within the area of this RNA. Vessels operating properly installed, operational, type approved automatic identification system (AIS) as denoted in 33 CFR 164.46 are exempted from making requests as required in this regulation.

(d) *Regulations.* (1) No vessel to which this rule applies may enter, depart or move within San Diego Bay or Mission Bay unless it complies with the following requirements:

(i) Obtain permission to enter San Diego Bay or Mission Bay from the Captain of the Port or designated representative immediately upon entering the RNA. However, to avoid potential delays, we recommend seeking permission 30 minutes prior to entering the RNA.

(ii) Follow all instructions issued by the Captain of the Port or designated representative.

(iii) Obtain permission for any departure from or movement within the RNA from the Captain of the Port or designated representative prior to getting underway.

(iv) Follow all instructions issued by the Captain of the Port or designated representative.

(v) Requests may be made by telephone at 619–278–7033 (select option 2)

or via VHF-FM radiotelephone on channel 16 (156.800 Mhz). The call sign for radiotelephone requests to the Captain of the Port or designated representative is ''Coast Guard Sector San Diego.''

(2) For purposes of the requirements in paragraph (d)(1) of this section, the Captain of the Port or designated representative means any official designated by the Captain of the Port, including but not limited to commissioned, warrant, and petty officers of the U.S. Coast Guard, and any U.S. Coast Guard patrol vessel. Upon being hailed by a U.S. Coast Guard vessel by siren, radio, flashing light, or other means, the operator of a vessel shall proceed as directed.

(e) *Waivers*. The Captain of the Port or designated representative may, upon request, waive any regulation in this section.

[CGD11–05–002, 70 FR 70495, November 22, 2005]

§ 165.1123 Southern California Annual Firework Events for the San Diego Captain of the Port Zone.

(a) *General*. Safety zones are established for the events listed in Table 1 of this section. Further information on exact dates, times, and other details concerning the exact geographical description of the areas are published by the Eleventh Coast Guard District in the Local Notice to Mariners at least 20 days prior to the event.

(b) *Regulations*. All persons and vessels not registered with the sponsor as participants or as official patrol vessels are considered spectators. The ''official patrol'' consists of any Coast Guard; other Federal, state, or local law enforcement; and any public or sponsor-provided vessels assigned or approved by the cognizant Coast Guard Sector Commander to patrol each event.

(1) No spectator shall anchor, block, loiter, nor impede the through transit of participants or official patrol vessels in the safety zone during all applicable effective dates and times unless cleared to do so by or through an official patrol vessel.

(2) When hailed and/or signaled by an official patrol vessel, any spectator located within a safety zone during all applicable effective dates and times shall come to an immediate stop.

(3) The Patrol Commander (PATCOM) is empowered to forbid and control the movement of all vessels in the safety zone. The Patrol Commander shall be designated by the cognizant Coast Guard Sector Commander; will be a U.S. Coast Guard commissioned officer, warrant officer, or petty officer to act as the Sector Commander's official representative. As the Sector Commander's representative, the PATCOM may terminate the event any time it is deemed necessary for the protection of life and property. PATCOM may be reached on VHF–FM Channel 13 (156.65MHz) or 16 (156.8MHz) when required, by the call sign ''PATCOM''.

(4) The Patrol Commander may, upon request, allow the transit of vessels through the safety zone when it is safe to do so.

(5) The Coast Guard may be assisted by other Federal, state, or local agencies.

TABLE 1 TO § 165.1123

[All coordinates referenced use datum NAD 83]

1. San Diego, CA POPS Fireworks Display	
Sponsor	San Diego Symphony
Event Description	Fireworks Display.
Date	Friday/Saturday/Sunday last weekend of June through first weekend of September.
Location	San Diego Bay South Embarcadero, San Diego, CA
Regulated Area	800-foot radius safety zone around tug/barge combination located at approximately: 32°42′16″ N, 117°09′59″ W.

TABLE 1 TO § 165.1123—Continued

[All coordinates referenced use datum NAD 83]

2. Fourth of July Fireworks, Mission Bay	
Sponsor	Mission Bay Yacht Club
Event Description	Fireworks Display.
Date	One evening; the first week in July.
Location	Mission Bay, San Diego, CA.
Regulated Area	800-foot radius safety zone around tug/barge combination located at approximately 32°47′00″ N, 117°14′45″ W.
3. Coronado Glorietta Bay Fourth of July Fireworks	
Sponsor	Coronado, CA.
Event Description	Fireworks Display.
Date	One evening; the first week in July.
Location	Glorietta Bay, CA.
Regulated Area	800-foot radius safety zone around a tug/barge combination located at approximately: 32°40′43″ N, 117°10′14″ W.
4. San Diego Parade of Lights Fireworks Display	
Sponsor	Greater Shelter Island Association.
Event Description	Boat Parade/Fireworks display.
Date	Two evenings in December.
Location	San Diego Harbor, San Diego, CA.
Regulated Area	800-foot radius safety zone around a tug/barge combination in the northern portion of the San Diego Main Ship Channel off of Harbor Island located at approximately: 32°43′25″ N, 117°11′50″ W. (Note: see also 33 CFR 100.1101, Table 1, for related marine event).
5. Big Bay Boom Fourth of July Fireworks	
Sponsor	Port of San Diego.
Event Description	Fireworks Display.
Date	One evening; first week in July
Location	San Diego Bay, San Diego, CA.
Regulated Area	1000-foot radius safety zone around four tug/barge combinations located at approximately: Shelter Island Barge: 32°42′48″ N, 117°13′12″ W; Harbor Island Barge: 32°43′00″ N, 117°12′00″ W; Embarcadero Barge: 32°42′45″ N, 117°10′47″ W; Seaport Village Barge: 32°42′02″ N, 117°10′00″ W.
6. MIDWAY Fireworks	
Sponsor	USS MIDWAY Association.
Event Description	Fireworks Display.
Date	Evening shows throughout the year.
Location	San Diego Bay off the USS MIDWAY, San Diego, CA.
Regulated Area	800-foot radius safety zone around either the tug/barge combination immediately to the west of the USS MIDWAY located at approximately: 32°42′46″ N, 117°10′47″ W or off of the western end of the flight deck of the USS MIDWAY.
7. Sea World Fireworks	
Sponsor	Sea World.
Event Description	Fireworks Display.

TABLE 1 TO § 165.1123—Continued

[All coordinates referenced use datum NAD 83]

Date	Nightly; between Memorial Day and Labor Day. Approximately 10 evening shows between Labor Day and Memorial Day, primarily on weekend evenings. Between Thanksgiving and New Year's Day as conditions allow.
Location	Mission Bay/Fiesta Island, San Diego, CA.
Regulated Area	800-foot radius safety zone around a tug/barge combination located at approximately: 32°46′03″ N, 117°13′11″ W.

[USCG–2009–0559, 76 FR 50671, Aug. 16, 2011, as amended by USCG–2013–0362, 79 FR 9091, Feb. 18, 2014]

§ 165.1124 Annual Firework Events on the Colorado River, between Davis Dam (Bullhead City, Arizona) and Headgate Dam (Parker, Arizona) within the San Diego Captain of Port Zone.

(a) *General*. Safety zones are established for the events listed in Table 1 of this section. Further information on exact dates, times, and other details concerning the exact geographical description of the areas are published by the Eleventh Coast Guard District in the Local Notice to Mariners at least 20 days prior to the event.

(b) *Regulations*. All persons and vessels not registered with the sponsor as participants or as official patrol vessels are considered spectators. The ''official patrol'' consists of any Coast Guard; other Federal, state, or local law enforcement; and any public or sponsor-provided vessels assigned or approved by the cognizant Coast Guard Sector Commander to patrol each event.

(1) No spectator shall anchor, block, loiter, nor impede the through transit of participants or official patrol vessels in the safety zone during all applicable effective dates and times unless cleared to do so by or through an official patrol vessel.

(2) When hailed and/or signaled by an official patrol vessel, any spectator located within a safety zone during all applicable effective dates and times shall come to an immediate stop.

(3) The Patrol Commander (PATCOM) is empowered to forbid and control the movement of all vessels in the safety zone. The Patrol Commander shall be designated by the cognizant Coast Guard Sector Commander; will be a U.S. Coast Guard commissioned officer, warrant officer, or petty officer to act as the Sector Commander's official representative. As the Sector Commander's representative, the PATCOM may terminate the event any time it is deemed necessary for the protection of life and property. PATCOM may be reached on VHF–FM Channel 13 (156.65MHz) or 16 (156.8MHz) when required, by the call sign ''PATCOM''.

(4) The Patrol Commander may, upon request, allow the transit of vessels through the safety zone when it is safe to do so.

(5) The Coast Guard may be assisted by other Federal, state, or local agencies.

TABLE 1 TO § 165.1124

[All coordinates referenced use datum NAD 83]

1. Avi Resort & Casino Memorial Day Fireworks	
Sponsor	Avi Resort & Casino.
Event Description	Fireworks Display.
Date	Sunday before Memorial Day.
Location	Laughlin, NV.

TABLE 1 TO § 165.1124—Continued

[All coordinates referenced use datum NAD 83]

Regulated Area	River closure from 8 p.m.–10 p.m. The safety zone includes all navigable waters of the lower Colorado River at Laughlin, NV encompassed by the following coordinates: 35°01′05″ N, 114°38′20″ W; 35°01′05″ N, 114°38′15″ W; along the shoreline to 35°00′50″ N, 114°38′13″ W; 35°00′49″ N, 114°38′18″ W; along the shoreline to 35°01′05″N, 114°38′20″ W.
2. Laughlin/Bullhead City Rockets Over the River Fireworks	
Sponsor	Laughlin Tourism Committee.
Event Description	Fireworks Display. Two events over the 4th of July Weekend. One will be on the 4th and the other will be on a weekend evening closest to the 4th of July.
Date	First week in July.
Location	Laughlin, NV./Bullhead City, AZ.
Regulated Area	The temporary safety zone is specifically defined as all navigable waters of the lower Colorado River at Laughlin, NV encompassed by the following coordinates: 35°09′53″ N, 114°34′15″ W; 35°09′53″ N, 114°34′07″ W; along the shoreline to 35°09′25″ N, 114°34′09″ W; 35°09′06″ N, 114°34′17″ W; along the shoreline to 35°09′53″ N, 114°34′15″ W.
3. Avi Resort & Casino Independence Day Fireworks	
Sponsor	Avi Resort & Casino.
Event Description	Fireworks Display.
Date	First week in July.
Location	Laughlin, NV.
Regulated Area	River closure from 8 p.m.–10 p.m. The safety zone includes all navigable waters of the lower Colorado River at Laughlin, NV encompassed by the following coordinates: 35°01′05″ N, 114°38′20″ W; 35°01′05″ N, 114°38′14″ W; along the shoreline to 35°00′50″ N, 114°38′13″ W; 35°00′49″ N, 114°38′18″ W; along the shoreline to 35°01′05″ N, 114°38′20″ W.
4. Avi Resort & Casino Labor Day Fireworks	
Sponsor	Avi Resort & Casino.
Event Description	Fireworks Display.
Date	Sunday before Labor Day.
Location	Laughlin, NV.
Regulated Area	River closure from 8 p.m.–10 p.m. The safety zone includes all navigable waters of the lower Colorado River at Laughlin, NV encompassed by the following coordinates: 35°01′05″ N, 114°38′20″ W; 35°01′05″ N, 114°38′15″ W; along the shoreline to 35°00′20″ N, 114°38′13″ W; 35°00′49″ N, 114°38′18″ W; along the shoreline to 35°01′05″N, 114°38′20″ W.
5. Colorado Belle & Edgewater Hotel/Casino Thanksgiving Fireworks	
Sponsor	Edgewater Hotel & Casino
Event Description	Fireworks Display.
Date	One evening during Thanksgiving week.
Location	Laughlin, NV.

TABLE 1 TO § 165.1124—Continued

[All coordinates referenced use datum NAD 83]

Regulated Area	The temporary safety zone is specifically defined as all navigable waters of the lower Colorado River at Laughlin, NV, from 10 p.m.–12:30 a.m., encompassed by the following coordinates: 35°09′51″ N, 114°34′08″ W; 35°09′53″ N, 114°34′15″ W, along the shoreline to 35°09′31″ N, 114°34′17″ W; 35°09′33″ N, 114°34′08″ W along the shoreline to 35°09′51″ N, 114°34′08″ W.
6. Colorado Belle & Edgewater Hotel/Casino New Years Eve Fireworks	
Sponsor	Edgewater Hotel & casino.
Event Description	Fireworks Display.
Date	New Years Eve.
Location	Laughlin, NV.
Regulated Area	The temporary safety zone is specifically defined as all navigable waters of the lower Colorado River at Laughlin, NV, from 10 p.m.–12:30 a.m., encompassed by the following coordinates: 35°09′51″ N, 114°34′08″ W; 35°09′53″ N, 114°34′15″ W along the shoreline to 35°09′ 31″ N, 114°34′18″ W; 35°09′33″ N, 114°34′08″ W along the shoreline to 35°09′51″ N, 114°34′08″ W.

[USCG–2009–0559, 76 FR 50672, Aug. 16, 2011, as amended by USCG–2013–0362, 79 FR 9092, Feb. 18, 2014]

§ 165.1125 Southern California Annual Firework Events for the Los Angeles Long Beach Captain of the Port zone.

(a) *General.* Safety zones are established for the events listed in Table 1 of this section. Further information on exact dates, times, and other details concerning the exact geographical description of the areas are published by the Eleventh Coast Guard District in the Local Notice to Mariners at least 20 days prior to the event.

(b) *Regulations.* All persons and vessels not registered with the sponsor as participants or as official patrol vessels are considered spectators. The ''official patrol'' consists of any Coast Guard; other Federal, state, or local law enforcement; and any public or sponsor-provided vessels assigned or approved by the cognizant Coast Guard Sector Commander to patrol each event.

(1) No spectator shall anchor, block, loiter, nor impede the through transit of participants or official patrol vessels in the safety zone during all applicable effective dates and times unless cleared to do so by or through an official patrol vessel.

(2) When hailed and/or signaled by an official patrol vessel, any spectator located within a safety zone during all applicable effective dates and times shall come to an immediate stop.

(3) The Patrol Commander (PATCOM) is empowered to forbid and control the movement of all vessels in the safety zone. The Patrol Commander shall be designated by the cognizant Coast Guard Sector Commander; will be a U.S. Coast Guard commissioned officer, warrant officer, or petty officer to act as the Sector Commander's official representative; and will be located aboard the lead official patrol vessel. As the Sector Commander's representative, the PATCOM may terminate the event any time it is deemed necessary for the protection of life and property. PATCOM may be reached on VHF–FM Channel 13 (156.65MHz) or 16 (156.8MHz) when required, by the call sign ''PATCOM''.

(4) The Patrol Commander may, upon request, allow the transit of commercial vessels through the safety zone when it is safe to do so.

(5) The Coast Guard may be assisted by other Federal, state, or local agencies.

TABLE 1 TO § 165.1125

[All coordinates referenced use datum NAD 83.]

1. Cambria American Legion Post Fourth of July Fireworks	
Sponsor	Cambria American Legion Post.
Event Description	Fireworks Display.
Date	July 4th.
Location	Shamel Beach, Cambria, CA.
Regulated Area	100-foot radius around the fireworks launch barge during the loading of pyrotechnics aboard the fireworks barge and during the transit of the fireworks barge from the loading location to the display location. Increases to a 1,000-foot radius upon commencement of the fireworks display.

2. LA County Dept of Beach and Harbors 4th of July Fireworks	
Sponsor	Los Angeles, CA County Dept of Beach and Harbors.
Event Description	Fireworks Display.
Date	July 4th.
Location	Main Ship Channel of Marina Del Rey, CA.
Regulated Area	100-foot radius around the fireworks launch barge during the loading of pyrotechnics aboard the fireworks barge and during the transit of the fireworks barge from the loading location to the display location. Increases to a 1,000-foot radius upon commencement of the fireworks display.

3. Fourth of July Fireworks, City of Dana Point	
Sponsor	City of Dana Point, CA.
Event Description	Fireworks Display.
Date	July 4th.
Location	Offshore Dana Point Harbor, CA.
Regulated Area	100-foot radius around the fireworks launch barge during the loading of pyrotechnics aboard the fireworks barge and during the transit of the fireworks barge from the loading location to the display location. Increases to a 1,000-foot radius upon commencement of the fireworks display.

4. Fourth of July Fireworks, City of Long Beach	
Sponsor	City of Long Beach, CA.
Event Description	Fireworks Display.
Date	July 4th.
Location	Long Beach Harbor, CA.
Regulated Area	100-foot radius around the fireworks launch barge during the loading of pyrotechnics aboard the fireworks barge and during the transit of the fireworks barge from the loading location to the display location. Increases to a 1,000-foot radius upon commencement of the fireworks display.

5. Fourth of July Fireworks, Irvine Cove Community Association	
Sponsor	Irvine Cove Community Association.
Event Description	Fireworks Display.
Date	July 4th.
Location	Offshore Laguna Beach, CA.

TABLE 1 TO § 165.1125—Continued

[All coordinates referenced use datum NAD 83.]

Regulated Area	100-foot radius around the fireworks launch barge during the loading of pyrotechnics aboard the fireworks barge and during the transit of the fireworks barge from the loading location to the display location. Increases to a 1,000-foot radius upon commencement of the fireworks display.
6. Fourth of July Fireworks, Emerald Bay Community Association	
Sponsor	Emerald Bay Community Association.
Event Description	Fireworks Display.
Date	July 4th.
Location	Offshore Laguna Beach, CA.
Regulated Area	100-foot radius around the fireworks launch barge during the loading of pyrotechnics aboard the fireworks barge and during the transit of the fireworks barge from the loading location to the display location. Increases to a 1,000-foot radius upon commencement of the fireworks display.
7. Fourth of July Fireworks, Morro Bay CoC	
Sponsor	Morro Bay Chamber of Commerce.
Event Description	Fireworks Display.
Date	July 4th.
Location	Offshore Morro Bay State Park.
Regulated Area	100-foot radius around the fireworks launch barge during the loading of pyrotechnics aboard the fireworks barge and during the transit of the fireworks barge from the loading location to the display location. Increases to a 1,000-foot radius upon commencement of the fireworks display.
8. Fourth of July Fireworks, Catalina Island CoC	
Sponsor	Catalina Island Chamber of Commerce.
Event Description	Fireworks Display.
Date	July 4th.
Location	Avalon Bay, CA.
Regulated Area	100-foot radius around the fireworks launch barge during the loading of pyrotechnics aboard the fireworks barge and during the transit of the fireworks barge from the loading location to the display location. Increases to a 1,000-foot radius upon commencement of the fireworks display.
9. Fourth of July Fireworks, City of Santa Barbara	
Sponsor	City of Santa Barbara, CA.
Event Description	Fireworks Display.
Date	July 4th.
Location	Harbor Entrance of Santa Barbara, CA.
Regulated Area	100-foot radius around the fireworks launch barge during the loading of pyrotechnics aboard the fireworks barge and during the transit of the fireworks barge from the loading location to the display location. Increases to a 1,000-foot radius upon commencement of the fireworks display.
10. Fourth of July Fireworks, City of Faria	
Sponsor	City of Faria, CA.

TABLE 1 TO § 165.1125—Continued

[All coordinates referenced use datum NAD 83.]

Event Description	Fireworks Display.
Date	July 4th.
Location	Offshore Faria Beach, CA
Regulated Area	100-foot radius around the fireworks launch barge during the loading of pyrotechnics aboard the fireworks barge and during the transit of the fireworks barge from the loading location to the display location. Increases to a 1,000-foot radius upon commencement of the fireworks display.
11. Fourth of July Fireworks, City of Redondo Beach	
Sponsor	City of Redondo Beach, CA.
Event Description	Fireworks Display.
Date	July 4th.
Location	Offshore Redondo Beach, CA.
Regulated Area	100-foot radius around the fireworks launch barge during the loading of pyrotechnics aboard the fireworks barge and during the transit of the fireworks barge from the loading location to the display location. Increases to a 1,000-foot radius upon commencement of the fireworks display.
12. Fourth of July Fireworks, City of San Pedro	
Sponsor	City of San Pedro, CA.
Event Description	Fireworks Display.
Date	July 4th.
Location	Offshore Cabrillo Beach, CA.
Regulated Area	100-foot radius around the fireworks launch barge during the loading of pyrotechnics aboard the fireworks barge and during the transit of the fireworks barge from the loading location to the display location. Increases to a 1,000-foot radius upon commencement of the fireworks display.
13. Fourth of July Fireworks, City of Cayucos	
Sponsor	City of Cayucos, CA.
Event Description	Fireworks Display.
Date	July 4th.
Location	Cayucos Pier.
Regulated Area	100-foot radius around the fireworks launch barge during the loading of pyrotechnics aboard the fireworks barge and during the transit of the fireworks barge from the loading location to the display location. Increases to a 1,000-foot radius upon commencement of the fireworks display.

[USCG–2009–0559, 76 FR 50673, Aug. 16, 2011]

§ 165.1131 Security Zone: Wilson Cove, San Clemente Island, California.

(a) *Location.* The following area is a security zone: The water area adjacent to San Clemente Island, California within 1.5 nautical miles (1.73 statute miles, 2.8 kilometers) of the shoreline of San Clemente Island from Wilson Cove North End Light (LLNR 2565) to Spruce Pier, approximately 4.1 nautical miles (4.7 statute miles, 7.65 kilometers) southeast of Wilson Cove North End Light, described as follows:

Starting at a point on the shoreline of San Clemente Island, California, in

position 33°01′25.0″ N, 118°33′43.0″ W, for a place of beginning (point A), thence northeasterly to 33°02′11.0″ N, 118°32′13.5″ W (point B), thence southeasterly to 32 °58′40.5″ N, 118°29′15.5″ W (point C), thence southwesterly to 32°57′54.0″ N, 118°31′17.2″ W (point D), thence northwesterly along the shoreline of San Clemente Island to the place of beginning.

(b) *Regulations.* In accordance with the general regulations in § 165.33 of this part, entry into the area of this zone is prohibited unless authorized by the Captain of the Port, San Diego, California. Section 165.33 also contains other general requirements.

[COTP San Diego Reg. 87–04, 52 FR 18230, May 14, 1987. Redesignated by USCG–2001–9286, 66 FR 33642, June 25, 2001]

§ 165.1141 Safety Zone; San Clemente 3 NM Safety Zone, San Clemente Island, CA.

(a) *Location.* The following area is a safety zone: All waters of the Pacific Ocean surrounding San Clemente Island, from surface to bottom, extending from the high tide line on the island seaward 3 NM. The zone consists of the following sections (*see* Figure 1):

(1) Section A

Beginning at 33°02.05′ N, 118°35.85′ W; thence to 33°04.93′ N, 118°37.07′ W; thence running parallel to the shore at a distance of approximately 3 NM from the high tide line to 33°02.82′ N, 118°30.65′ W; thence 33°01.29′ N, 118°33.88′ W; thence along the shoreline returning to 33°02.05′ N, 118°35.85′ W.

(2) Section B

Beginning at 32°57.30′ N, 118°30.88′ W; thence to 32°59.60′ N, 118°28.33′ W; thence running parallel to the shore at a distance of approximately 3 NM from the high tide line to 32°55.83′ N, 118°24.22′ W; thence to 32°53.53′ N, 118°26.52′ W; thence along the shoreline returning to 32°57.30′ N, 118°30.88′ W.

(3) Section C

Beginning at 32°53.53′ N, 118°26.52′ W; thence to 32°55.83′ N, 118°24.22′ W; thence running parallel to the shore at a distance of approximately 3 NM from the high tide line to 32°47.27′ N, 118°18.23′ W; thence to 32°49.10′ N, 118°21.05′ W; thence along the shoreline returning to 32°53.53′ N, 118°26.52′ W.

(4) Section D

Beginning at 32°49.10′ N, 118°21.05′ W; thence to 32°47.27′ N, 118°18.23′ W; thence running parallel to the shore at a distance of approximately 3 NM from the high tide line to 32°48.38′ N, 118°31.69′ W; thence to 32°50.70′ N, 118°29.37′ W; thence along the shoreline returning to 32°49.10′ N, 118°21.05′ W.

(5) Section E

Beginning at 32°50.70′ N, 118°29.37′ W; thence to 32°48.05′ N, 118°31.68′ W; thence running parallel to the shore at a distance of approximately 3 NM from the high tide line to 32°53.62′ N, 118°35.93′ W; thence to 32°56.13′ N, 118°32.95′ W; thence along the shoreline returning to 32°50.70′ N, 118°29.37′ W.

(6) Section F

Beginning at 32°56.13′ N, 118°32.95′ W; thence to 32°53.62′ N, 118°35.93′ W; thence running parallel to the shore at a distance of approximately 3 NM from the high tide line to 32°59.95′ N, 118°39.77′ W; thence to 33°01.08′ N, 118°36.33′ W; thence along the shoreline returning to 32°56.13′ N, 118°32.95′ W.

(7) Section G

Beginning at 33°01.08’ N, 118°36.333’ W; thence to 32°59.95′ N, 118°39.77′ W; thence running parallel to the shore at a distance of approximately 3 NM from the high tide line to 33°04.93′ N, 118°37.07′ W; thence to 33°02.05′ N, 118°35.85′ W; along the shoreline returning to 33°01.08′ N, 118°36.33′ W.

(8) Wilson Cove

Beginning at 33°01.28′ N, 118°33.88′ W; thence to 33°02.82′ N, 118°30.65′ W; thence running parallel to the shore at a distance of approximately 3 NM from the high tide line to 32°59.60’ N, 118°28.33′ W; thence to 32°57.30′ N, 118°30.88′ W; thence along the shoreline returning to 33°01.28′ N, 118°33.88′ W.

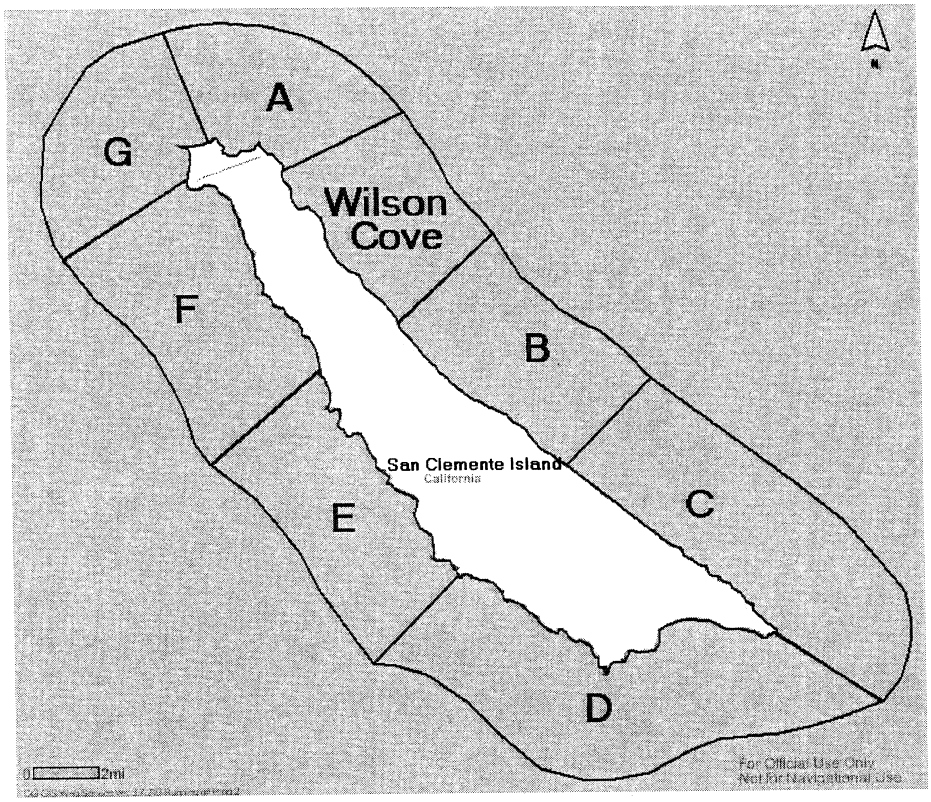

Figure 1. San Clemente Island Safety Zone Configuration

(b) *Definitions.* The following definition applies to this section: designated representative, means any commissioned, warrant, and petty officers of the Coast Guard on board Coast Guard, Coast Guard Auxiliary, and local, state, and Federal law enforcement vessels who have been authorized to act on the behalf of the Captain of the Port (COTP).

(c) *Enforcement.* (1) This regulation will be enforced at all times in Section G and the Wilson Cove section of the safety zone described in paragraph (a) of this section. Mariners must obtain permission in accordance with the procedure described in paragraph (d)(2) of this section before entering either of those sections (paragraphs (a)(7) and (8)).

(2) This regulation will be enforced in Sections A through F of the safety zone described in paragraphs (a)(1) through (6) of this section except when the Coast Guard notifies the public that enforcement of the zone in specified sections is temporarily suspended. Mariners need not obtain permission in accordance with the procedure described in paragraph (d)(2) of this section to enter a zone section in which enforcement is temporarily suspended. At all other times, mariners must obtain permission in accordance with the procedure described in paragraph (d)(2) before entering any of those sections.

(3) The COTP will provide notice of suspended enforcement by means appropriate to effect the widest publicity, including broadcast notice to mariners,

publication in the local notice to mariners, and posting the schedule of restricted access periods by date, location and duration at *http://www.scisland.org*.

(d) *Regulations*. (1) The general regulations governing safety zones found in 33 CFR 165.23 apply to the safety zone described in paragraph (a) of this section.

(2) Mariners requesting permission to transit through any section of the zone may request authorization to do so from the Fleet Area Control and Surveillance Facility (FACSFAC) San Diego by either calling 619–545–4742 or establishing a VHF bridge to bridge radio connection on Channel 16. Immediately upon completing transit, the vessel operator must promptly notify the FACSFAC of safe passage through the safety zone. Failure to expeditiously notify FACSFAC of passage through the safety zone will result in a determination by the Navy that the vessel is still in the safety zone, thereby restricting the use of the area for naval operations. If the Navy determines that facilitating safe transit through the zone negatively impacts range operations, the Navy will cease this practice and enforce the safety zones in these two areas without exception.

(3) All persons and vessels must comply with the instructions of the U.S. Navy, Coast Guard Captain of the Port or the designated representative.

(4) Upon being hailed by U.S. Navy or U.S. Coast Guard patrol personnel by siren, radio, flashing light, or other means, the operator of a vessel must proceed as directed.

(5) The U.S. Coast Guard may be assisted in the patrol and enforcement of the safety zone described in paragraph (a) of this section by the U.S. Navy and local law enforcement agencies.

[USCG–2009–0277, 75 FR 28198, May 20, 2010]

§ 165.1151 Security Zones; liquefied hazardous gas tank vessels, San Pedro Bay, California.

(a) *Definition*. ''Liquefied Hazardous Gas'' as used in this section means a liquid containing one or more of the products listed in Table 127.005 of this part that is carried in bulk on board a tank vessel as liquefied petroleum gas, liquefied natural gas, or similar liquefied gas products.

(b) *Location*. The following areas are security zones:

(1) All waters, extending from the surface to the sea floor, within a 500 yard radius around any liquefied hazardous gas (LHG) tank vessel that is anchored at a designated anchorage either inside the Federal breakwaters bounding San Pedro Bay or outside at designated anchorages within three nautical miles of the breakwater;

(2) The shore area and all waters, extending from the surface to the sea floor, within a 500 yard radius around any LHG tank vessel that is moored, or in the process of mooring, at any berth within the Los Angeles or Long Beach port areas inside the Federal breakwaters bounding San Pedro Bay;

(3) All waters, extending from the surface to the sea floor, within 1000 yards ahead and 500 yards on each side and astern of any LHG tank vessel that is underway either on the waters inside the Federal breakwaters bounding San Pedro Bay or on the waters within three nautical miles seaward of the Federal breakwaters.

(c) *Regulations*. (1) In accordance with the general regulations in § 165.33 of this part, entry into or remaining in these zones is prohibited unless authorized by the Coast Guard Captain of the Port Los Angeles-Long Beach, or his or her designated representative.

(2) Persons desiring to transit the area of the security zone may contact the Captain of the Port at telephone number (800) 221–USCG (8724) or on VHF-FM channel 16 (156.8 MHz) to seek permission to transit the area. If permission is granted, all persons and vessels shall comply with the instructions of the Captain of the Port or his or her designated representative.

(3) When any LHG tank vessels approach within 500 yards of a vessel that is moored or anchored, the stationary vessel must stay moored or anchored while it remains within the LHG tank vessel's security zone unless it is either ordered by or given permission from the Captain of the Port Los Angeles-Long Beach to do otherwise.

(d) *Authority*. In addition to 33 U.S.C. 1231 and 50 U.S.C. 191, the authority for this section includes 33 U.S.C. 1226.

(e) *Enforcement*. The U.S. Coast Guard may be assisted in the patrol and enforcement of these security zones by the Los Angeles Port Police and the Long Beach Police Department.

[COTP Los Angeles-Long Beach 02–005, 68 FR 13233, Mar. 19, 2003]

§ 165.1152 San Pedro Bay, California—Regulated navigation area.

(a) *Applicability*. This section applies to all vessels unless otherwise specified. (Note: All geographic coordinates are defined using North American Datum 1983 (NAD 83)).

(b) *Deviations*. The Captain of the Port of Los Angeles-Long Beach or his or her designated representative may authorize a deviation from the requirements of this regulation when it is deemed necessary in the interests of safety.

(c) *Location*. (1) The San Pedro Bay Regulated Navigation Area (RNA) consists of the water area enclosed by the Los Angeles-Long Beach breakwater and a line connecting Point Fermin Light at 33°42.30′ N, 118°17.60′ W, with the following geographical positions:

Latitude	Longitude
33°35.50′ N	118°17.60′ W
33°35.50′ N	118°09.00′ W
33°37.70′ N	118°06.50′ W
33°43.40′ N	118°10.80′ W

(2) The San Pedro Bay RNA consists of the following named sub-areas, defined by lines connecting their respective geographic coordinates:

(i) *The Los Angeles Pilot Area:*

Latitude	Longitude
33°42.50′ N	118°15.10′ W (Los Angeles Light)
33°42.62′ N	118°14.70′ W
33°41.30′ N	118°13.50′ W
33°40.85′ N	118°14.90′ W
33°42.50′ N	118°15.10′ W

(ii) *The Long Beach Pilot Area:*

Latitude	Longitude
33°43.40′ N	118°11.20′ W (Long Beach Light)
33°43.40′ N	118°10.80′ W
33°41.50′ N	118°10.22′ W
33°40.52′ N	118°10.22′ W
33°40.52′ N	118°11.82′ W
33°41.50′ N	118°11.82′ W
33°43.40′ N	118°11.20′ W

(iii) *The Los Angeles Deep Water Traffic Lane:*

Latitude	Longitude
33°42.47′ N	118°14.95′ W
33°42.56′ N	118°14.75′ W
33°39.48′ N	118°13.32′ W
33°39.42′ N	118°13.55′ W
33°42.47′ N	118°14.95′ W

(iv) *The Long Beach Deep Water Traffic Lane:*

Latitude	Longitude
33°43.43′ N	118°11.15′ W
33°43.39′ N	118°10.90′ W
33°41.51′ N	118°10.71′ W
33°41.50′ N	118°10.95′ W
33°43.43′ N	118°11.15′ W

(v) *Los Angeles Deep Water Pilot Area:* A 0.5nm radius around 33°39.00′ N, 118°13.19′ W.

(d) *General regulations*. The following regulations contained in paragraphs (d)(1) through (d)(3) of this section apply to power driven vessels of 1600 or more gross tons, a towing vessel of 8 meters (approximately 26 feet) or over in length engaged in towing, or vessels of 100 gross tons and upward carrying one or more passengers for hire.

(1) A vessel shall not exceed a speed of 12 knots through the water within the RNA.

(2) A vessel navigating within the RNA, shall have its engine(s) ready for immediate maneuver and shall operate its engine(s) in a control mode and on fuel that will allow for an immediate response to any engine order, ahead or astern, including stopping its engine(s) for an extended period of time.

(3) A vessel navigating within the RNA shall maintain a minimum separation from other vessels of at least 0.25 nm.

(e) *Specific regulations*—(1) *Los Angeles Pilot Area*. (i) No vessel may enter the Los Angeles Pilot Area unless it is entering or departing Los Angeles Harbor entrance (Angels Gate).

(ii) Vessels entering the Los Angeles Pilot Area shall pass directly through without stopping or loitering except as necessary to embark or disembark a pilot.

(2) *Long Beach Pilot Area*. (i) No vessel may enter the Long Beach Pilot Area unless it is entering or departing Long Beach Harbor entrance (Queens Gate).

(ii) Vessels entering the Long Beach Pilot Area shall pass directly through without stopping or loitering except as necessary to embark or disembark a pilot.

(iii) Every vessel shall leave Long Beach Approach Lighted Whistle Buoy ''LB'' to port when entering and departing Long Beach Channel and departing vessels shall pass across the southern boundary of the Long Beach Pilot Area.

(3) *Los Angeles and Long Beach Deep Water Traffic Lanes.* When a vessel of 50 foot draft or greater is using the Los Angeles or Long Beach Deep Water Traffic Lane no other vessel shall enter the Deep Water Traffic Lane if it will result in a meeting, crossing or overtaking situation.

(4) *Los Angeles Deep Water Pilot Area.* When a vessel of 50 foot draft or greater is embarking or disembarking a pilot in the Los Angeles Deep Water Pilot Area no other vessel shall enter the Deep Water Pilot Area.

(5) Vessels described in paragraph (d) of this section may not enter the waters between Commercial Anchorage G and the Middle Breakwater as defined by an area enclosed by the line beginning at Los Angeles Main Channel Entrance Light 2 (33°42.70′ N, 118°14.70′ W), thence east along the Middle Breakwater to Long Beach Light (33°43.40′ N, 118°11.20′ W), thence south to (33°43.08′ N, 118°11.26′ W), thence westerly to (33°43.08′ N, 118°12.26′ W), thence southwesterly parallel to the breakwater to (33°42.43′ N, 118°14.30′ W), thence to the point of origin, unless such vessel is:

(i) In an emergency;

(ii) Proceeding to anchor in or departing Commercial Anchorage G;

(iii) Standing by with confirmed pilot boarding arrangements; or,

(iv) Engaged in towing vessels to or from Commercial Anchorage G, or to or from the waters between Commercial Anchorage G and the Middle Breakwater.

[CGD11–00–007, 65 FR 62294, Oct. 18, 2000. Redesignated by USCG–2001–9286, 66 FR 33642, June 25, 2001]

§ 165.1154 Security Zones; Cruise Ships, San Pedro Bay, California.

(a) *Definition.* ''Cruise ship'' as used in this section means a passenger vessel, except for a ferry, over 100 feet in length, authorized to carry more than 12 passengers for hire; making voyages lasting more than 24 hours, any part of which is on the high seas; and for which passengers are embarked or disembarked in the Port of Los Angeles or Port of Long Beach.

(b) *Location.* The following areas are security zones: All navigable waters, extending from the surface to the sea floor, within a 100-yard radius around any cruise ship that is located within the San Pedro Bay area landward of the sea buoys bounding the port of Los Angeles or Port of Long Beach or designated anchorages within 3 nautical miles seaward of the Federal Breakwaters.

(c) *Regulations.* Under regulations in 33 CFR part 165, subpart D, a person or vessel may not entry into or remain in the security zones created by this section unless authorized by the Coast Guard Captain of the Port, Los Angeles—Long Beach (COTP) or a COTP designated representative.

(1) Persons desiring to transit these security zones may contact the COTP at telephone number (310) 521–3801 or on VHF–FM channel 16 (156.8 MHz) to seek permission to transit the area. If permission is granted, all persons and vessels must comply with the instructions of the Captain of the Port or his or her designated representative.

(2) When a cruise ship approaches within 100 yards of a vessel that is moored, or anchored, the stationary vessel must stay moored or anchored while it remains within the cruise ship's security zone unless it is either ordered by, or given permission from, the COTP Los Angeles-Long Beach to do otherwise.

(d) *Authority.* In addition to 33 U.S.C. 1231 and 50 U.S.C. 191, the authority for this section includes 33 U.S.C. 1226.

(e) *Enforcement.* The U.S. Coast Guard may be assisted in the patrol and enforcement of the security zone by the

Los Angeles Port Police and the Long Beach Police Department.

[COTP Los Angeles-Long Beach 02–004, 67 FR 72563, Dec. 6, 2002, as amended by USCG–2011–0101, 77 FR 1027, Jan. 9, 2012]

§ 165.1155 Security Zone; Diablo Canyon Nuclear Power Plant, Avila Beach, California.

(a) *Location*. The following area is a security zone: all waters of the Pacific Ocean, from surface to bottom, within a 2,000 yard radius of Diablo Canyon Nuclear Power Plant centered at position 35°12′23″ N, 120°51′23″ W. [Datum: NAD 83].

(b) *Regulations*. (1) In accordance with the general regulations in § 165.33 of this part, entry into or remaining in this zone is prohibited unless authorized by the Coast Guard Captain of the Port, Los Angeles-Long Beach, or his or her designated representative.

(2) Persons desiring to transit the area of the security zone may contact the Captain of the Port at telephone number 1–800–221–8724 or on VHF-FM channel 16 (156.8 MHz). If permission is granted, all persons and vessels must comply with the instructions of the Captain of the Port or his or her designated representative.

(c) *Authority*. In addition to 33 U.S.C. 1231, the authority for this section includes 33 U.S.C. 1226.

[COTP Los Angeles-Long Beach 02–006, 67 FR 77430, Dec. 18, 2002]

§ 165.1156 Safety Zone; Offshore Marine Terminal, El Segundo, CA.

(a) *Location*. The following area is a safety zone: All waters of Santa Monica Bay, from surface to bottom, enclosed by a line beginning at latitude 33°54′59″ N, longitude 118°26′50″ W; then to latitude 33°54′59″ N, longitude 118°27′34″ W; then to latitude 33°54′00″ N, longitude 118°27′34″ W; then to latitude 33°54′00″ N, longitude 118°26′50″ W; then to the point of beginning (NAD 1983).

(b) *Regulations*. (1) In accordance with the general regulations in § 165.23 of this part, entry into or movement within this zone is prohibited except for:

(i) Commercial vessels authorized to use the offshore marine terminal for loading or unloading;

(ii) Commercial tugs, lighters, barges, launches, or other vessels authorized to engage in servicing the offshore marine terminal or vessels therein;

(iii) Public vessels of the United States.

(2) Persons desiring to transit the area of the safety zone may contact the Captain of the Port at telephone number 1–800–221–8724 or on VHF-FM channel 16 (156.8 MHz). If permission is granted, all persons and vessels must comply with the instructions of the Captain of the Port or his or her designated representative.

(3) Nothing in this section shall be construed as relieving the owner or person in charge of any vessel from complying with the Navigation Rules as defined in 33 CFR chapter I, subchapters D and E and safe navigation practice.

[COTP Los Angeles-Long Beach 03–002, 70 FR 30640, May 27, 2005]

§ 165.1157 Security Zone; Cruise Ships, Santa Barbara, California.

(a) *Location*. The following areas are security zones: All navigable waters, from the surface to the sea floor within a 100-yard radius of any cruise ship located within 3 nautical miles of the Santa Barbara Harbor Breakwater Light (Light List Number 3750; 34–24–17.364 N, 119–41–16.260W).

(b) *Definition*. ''Cruise ship'' as used in this section means any vessel, except for a ferry, over 100 feet in length, authorized to carry more than 12 passengers for hire; making voyages lasting more than 24 hours, any part of which is on the high seas; and for which passengers are embarked or disembarked in the U.S. or its territories.

(c) *Regulations*. (1) Under general security zone regulations in subpart D, entry into or remaining in the zones described in paragraph (a) of this section is prohibited unless authorized by the Coast Guard Captain of the Port (COTP) Los Angeles—Long Beach (LA–LB), or a designated representative of COTP LA–LB.

(2) Persons desiring to transit the area of the security zone may contact the COTP LA–LB at telephone number 1–310–521–3801 or on VHF–FM channel 16 (156.800 MHz) to seek permission to

transit the area. If permission is granted, all persons and vessels must comply with the instructions of the Captain of the Port, or his designated representative.

[USCG–2011–0906, 77 FR 65623, Oct. 30, 2012]

§ 165.1171 Copper Canyon, Lake Havasu, Colorado River—Regulated Navigation Area.

(a) *Location*. The following is a regulated navigation area:

(1) In the water area of Copper Canyon, Lake Havasu, Colorado River, beginning at the approximate center of the mouth of Copper Canyon and drawing a line down the approximate center of the canyon extending shoreward to the end of the navigable waters of the canyon, and comprising a semi-rectangular area extending 30 feet on each side of the line, for a total semi-rectangular width of 60 feet.

(2) This line is more precisely described as: beginning at latitude 34°25′67.6″ N, longitude 114°18′38.5″ W, thence southwesterly to latitude 34°25′64″ N, longitude 114°18′45.7″ W, thence northwesterly to latitude 34°25′65.6″ N, longitude 114°18′46.7″ W, thence southeasterly to latitude 34°25′60.7″ N, longitude 114°18′42.7″ W, thence southwesterly to longitude 34°25′51.4″ N, latitude 114°18′46.2″ W, thence southeasterly to latitude 34°25′47.1″ N, longitude 114°18′49.4″ W, thence to the end of the navigable waters of the canyon.

(b) *Definitions*. For the purposes of this section:

(1) *Vessel:* Every description of watercraft, used or capable of being used as a means of transportation on the water, and regardless of mode of power.

(2) *Patrol Vessel:* Vessels designated by the Captain of the Port, San Diego, to enforce or assist in enforcing these regulations, including Coast Guard, Coast Guard Auxiliary, and San Bernardino County Sheriff's Department Vessels.

(c) *Regulations*. (1) Vessels, with the exception of patrol vessels, shall not anchor, moor, loiter in, or otherwise impede the transit of any other vessel within the regulated navigation area. Furthermore, all vessels, with the exception of patrol vessels, shall expeditiously and continuously transit the regulated navigation area via the most direct route consistent with navigational safety.

(2) During periods of vessels congestion within the Copper Canyon area, as determined by the Captain of the Port or his or her designated on-scene representative, the regulated navigation area will be closed to all vessels, with the exception of patrol vessels. During designated closure periods, no vessel may enter, remain in, or transit through the regulated navigation area, with the exception of patrol vessels. Designation of periods of vessel congestion and announcement of the closure of the regulated navigation area will be conducted by broadcast notices to mariners on VHF-FM Channel 16 no less frequently than every hour for the duration of the closure period.

(3) Each person in the regulated navigation area shall comply with the directions of the Captain of the Port or his or her designated on-scene representative regarding vessel operation.

[CGD11–97–010, 63 FR 38308, July 16, 1998. Redesignated by USCG–2001–9286, 66 FR 33642, June 25, 2001]

§ 165.1181 San Francisco Bay Region, California—regulated navigation area.

(a) *Applicability*. This section applies to all vessels unless otherwise specified.

(b) *Deviations*. The Captain of the Port, San Francisco Bay, or the Commanding Officer, Vessel Traffic Service San Francisco, as a representative of the Captain of the Port, may authorize a deviation from the requirements of this regulation when it is deemed necessary in the interests of safety.

(c) *Regulated Navigation Areas*—(1) *San Francisco Bay RNA*. (i) The following is a regulated navigation area—The waters bounded by a line connecting the following coordinates, beginning at:

37°47′18″ N, 122°30′22″ W; thence to 37°48′55″ N, 122°31′41″ W; thence along the shoreline to 37°50′38″ N, 122°28′37″ W; thence to 37°50′59″ N, 122°28′00″ W; thence to 37°51′45″ N, 122°27′28″ W; thence to 37°52′58″ N, 122°26′06″ W; thence to 37°51′53″ N, 122°24′58″ W; thence to 37°51′53″ N, 122°24′00″ W; thence to 37°51′40″ N, 122°23′48″ W; thence to 37°49′22″ N, 122°23′48″ W; thence to 37°48′20″ N, 122°22′12″ W; thence to 37°47′02″ N,

122°21′33″ W; thence to 37°47′02″ N, 122°23′04″ W; thence along the shoreline to the point of beginning.

Datum: NAD 83

(ii) The San Francisco Bay RNA consists of the following defined sub-areas:

(A) *Golden Gate Traffic Lanes*—(*1*) *Westbound traffic lane:* Bounded by the Golden Gate precautionary area and the COLREGS Demarcation Line (33 CFR 80.1142), between the separation zone and a line connecting the following coordinates:

37°48′30″ N, 122°31′22″ W; thence to 37°49′03″ N, 122°29′52″ W.

Datum: NAD 83

(*2*) *Eastbound traffic lane*. Bounded by the COLREGS Demarcation Line (33 CFR 80.1142) and the Golden Gate precautionary area, between the separation zone and a line connecting the following coordinates:

37°47′50″ N, 122°30′48″ W; thence to 37°48′30″ N, 122°29′29″ W.

Datum: NAD 83

(*3*) *Golden Gate Separation Zone:* The area 75 yards each side of a line connecting the following coordinates:

37°48′08″ N, 122°31′05″ W; thence to 37°48′46″ N, 122°29′40″ W.

Datum: NAD 83

(B) *Golden Gate Precautionary Area:* An area bounded by a line connecting the following coordinates beginning at:

37°48′30″ N, 122°29′29″ W; thence to 37°48′52″ N, 122°28′41″ W; thence to 37°48′52″ N, 122°27′49″ W; thence to 37°49′36″ N, 122°27′46″ W; thence to 37°49′55″ N, 122°28′09″ W; thence to 37°49′28″ N, 122°28′45″ W; thence to 37°49′03″ N, 122°29′52″ W; thence returning to the point of beginning.

Datum: NAD 83

(C) *Central Bay Traffic Lanes*—(*1*) Westbound traffic lane: Bounded by the Central Bay precautionary area and the Golden Gate precautionary area, between the Central Bay and the Deep Water Traffic Lane separation zones.

(*2*) *Eastbound traffic lane:* Bounded by the Golden Gate precautionary area and the Central Bay precautionary area, between the Central Bay Separation Zone and a line connecting the following coordinates, beginning at:

37°48′41″ N, 122°25′17″ W; thence to 37°48′50″ N, 122°26′14″ W; thence to 37°48′52″ N, 122°27′49″ W.

Datum: NAD 83

(*3*) *Deep Water (two-way) Traffic Lane:* Bounded by the Central Bay precautionary area and the Golden Gate precautionary area, between the Deep Water Traffic Lane separation zone and a line connecting the following coordinates, beginning at:

37°49′55″ N, 122°28′09″ W; thence to 37°50′36″ N, 122°27′12″ W; thence to 37°50′47″ N, 122°26′26″ W.

Datum: NAD 83

(D) *Central Bay Separation Zone:* The area 75 yards each side of a line connecting the following coordinates, beginning at:

37°49′17″ N, 122°27′47″ W; thence to 37°49′35″ N, 122°25′25″ W.

Datum: NAD 83

(E) *Deep Water Traffic Lane Separation Zone:* The area 75 yards each side of a line connecting the following coordinates, beginning at:

37°49′36″ N, 122°27′46″ W; thence to 37°50′22″ N, 122°26′49″ W; thence to 37°50′25″ N, 122°26′22″ W.

Datum: NAD 83

(F) *Central Bay Precautionary Area:* An area bounded by a line connecting the following coordinates, beginning at:

37°48′41″ N, 122°25′17″ W; thence to 37°49′32″ N, 122°25′13″ W; thence to 37°50′25″ N, 122°26′22″ W; thence to 37°50′47″ N, 122°26′26″ W; thence to 37°51′04″ N, 122°24′58″ W; thence to 37°51′53″ N, 122°24′58″ W; thence to 37°51′53″ N, 122°24′00″ W; thence to 37°51′40″ N, 122°23′48″ W; thence to 37°49′22″ N, 122°23′48″ W; thence to 37°48′20″ N, 122°22′12″ W; thence to 37°47′02″ N, 122°21′33″ W; thence to 37°47′02″ N, 122°23′04″ W; thence returning along the shoreline to the point of beginning.

Datum: NAD 83

(2) *North Ship Channel RNA*. The following is a regulated navigation area—The waters bounded by a line connecting the following coordinates, beginning at:

37°51′53″ N, 122°24′58″ W; thence to 37°54′15″ N, 122°27′27″ W; thence to 37°56′06″ N, 122°26′49″ W;

thence to 37°56′06″ N, 122°26′34″ W; thence to 37°54′48″ N, 122°26′42″ W; thence to 37°54′02″ N, 122°26′10″ W; thence to 37°51′53″ N, 122°24′00″ W; thence to returning to the point of beginning.

Datum: NAD 83

(3) *San Pablo Strait Channel RNA*. The following is a regulated navigation area—The waters bounded by a line connecting the following coordinates, beginning at:

37°56′06″ N, 122°26′49″ W; thence to 37°57′26″ N, 122°27′21″ W; thence to 38°00′48″ N, 122°24′45″ W; thence to 38°01′54″ N, 122°22′24″ W; thence to 38°01′44″ N, 122°22′18″ W; thence to 37°57′37″ N, 122°26′23″ W; thence to 37°56′06″ N, 122°26′34″ W; thence returning to the point of beginning.

Datum: NAD 83

(4) *Pinole Shoal Channel RNA*. The following is a regulated navigation area—The waters bounded by a line connecting the following coordinates, beginning at:

38°01′54″ N, 122°22′25″ W; thence to 38°03′13″ N, 122°19′50″ W; thence to 38°03′23″ N, 122°18′31″ W; thence to 38°03′13″ N, 122°18′29″ W; thence to 38°03′05″ N, 122°19′28″ W; thence to 38°01′44″ N, 122°22′18″ W; thence returning to the point of beginning.

Datum: NAD 83

(5) *Benicia-Martinez Railroad Drawbridge Regulated Navigation Area (RNA)*: The following is a regulated navigation area—The waters bounded by the following longitude lines:

(i) 122°13′31″ W (coinciding with the charted location of the Carquinez Bridge)

(ii) 121°53′17″ W (coinciding with the charted location of New York Point)

Datum: NAD 83

(6) *Southampton Shoal Channel/Richmond Harbor RNA:* The following, consisting of two distinct areas, is a regulated navigation area—

(i) The waters bounded by a line connecting the following coordinates, beginning at:

37°54′17″ N, 122°22′00″ W; thence to 37°54′08″ N, 122°22′00″ W; thence to 37°54′15″ N, 122°23′12″ W; thence to 37°54′30″ N, 122°23′09″ W; thence along the shoreline to the point of beginning.

Datum: NAD 83

(ii) The waters bounded by a line connecting the following coordinates, beginning at:

37°54′28″ N, 122°23′36″ W; thence to
37°54′20″ N, 122°23′38″ W; thence to
37°54′23″ N, 122°24′02″ W; thence to
37°54′57″ N, 122°24′51″ W; thence to
37°55′05″ N, 122°25′02″ W; thence to
37°54′57″ N, 122°25′22″ W; thence to
37°53′26″ N, 122°25′03″ W; thence to
37°53′24″ N, 122°25′13″ W; thence to
37°55′30″ N, 122°25′35″ W; thence to
37°55′40″ N, 122°25′10″ W; thence to
37°54′54″ N, 122°24′30″ W; thence to
37°54′30″ N, 122°24′00″ W; thence returning to the point of beginning.

Datum: NAD 83

(7) *Oakland Harbor RNA*: The following is a regulated navigation area—The waters bounded by a line connecting the following coordinates, beginning at:

37°48′40″ N, 122°19′58″ W; thence to
37°48′50″ N, 122°20′02″ W; thence to
37°48′29″ N, 122°20′39″ W; thence to
37°48′13″ N, 122°21′26″ W; thence to
37°48′10″ N, 122°21′39″ W; thence to
37°48′20″ N, 122°22′12″ W; thence to
37°47′36″ N, 122°21′50″ W; thence to
37°47′52″ N, 122°21′40″ W; thence to
37°48′03″ N, 122°21′00″ W; thence to
37°47′48″ N, 122°19′46″ W; thence to
37°47′55″ N, 122°19′43″ W; thence returning along the shoreline to the point of the beginning.

Datum: NAD 83

(d) *General regulations*. (1) A power-driven vessel of 1600 or more gross tons, or a tug with a tow of 1600 or more gross tons, navigating within the RNAs defined in paragraph (c) of this section, shall not exceed a speed of 15 knots through the water.

(2) A power-driven vessel of 1600 or more gross tons, or a tug with a tow of 1600 or more gross tons, navigating within the RNAs defined in paragraph (c) of this section, shall have its engine(s) ready for immediate maneuver and shall operate its engine(s) in a control mode and on fuel that will allow for an immediate response to any engine order, ahead or astern, including stopping its engine(s) for an extended period of time.

(3) The master, pilot or person directing the movement of a vessel within

the RNAs defined in paragraph (c) of this regulation shall comply with Rule 9 of the Inland Navigation Rules (INRs) (33 U.S.C. 2009) in conjunction with the provisions of the associated INRs.

(e) *Specific Regulations*—(1) *San Francisco Bay RNA:* (i) A vessel shall navigate with particular caution in a precautionary area, or in areas near the terminations of traffic lanes or channels, as described in this regulation.

(ii) A power-driven vessel of 1600 or more gross tons, or a tug with a tow of 1600 or more gross tons, shall:

(A) Use the appropriate traffic lane and proceed in the general direction of traffic flow for that lane;

(B) Use the Central Bay Deep Water Traffic Lane if eastbound with a draft of 45 feet or greater or westbound with a draft of 28 feet or greater;

(C) Not enter the Central Bay Deep Water Traffic Lane when another power-driven vessel of 1600 or more gross tons or tug with a tow of 1600 or more gross tons is navigating therein when either vessel is:

(*1*) Carrying certain dangerous cargoes (as denoted in section 160.203 of this subchapter);

(*2*) Carrying bulk petroleum products; or

(*3*) A tank vessel in ballast if such entry would result in meeting, crossing, or overtaking the other vessel.

(D) Normally join or leave a traffic lane at the termination of the lane, but when joining or leaving from either side, shall do so at as small an angle to the general direction of traffic flow as practicable;

(E) So far as practicable keep clear of the Central Bay Separation Zone and the Deep Water Traffic Lane Separation Zone;

(F) Not cross a traffic lane separation zone unless crossing, joining, or leaving a traffic lane.

(2) *Pinole Shoal Channel RNA:* (i) A vessel less than 1600 gross tons or a tug with a tow of less than 1600 gross tons is not permitted within this RNA.

(ii) A power-driven vessel of 1600 or more gross tons or a tug with a tow of 1600 or more gross tons shall not enter Pinole Shoal Channel RNA when another power-driven vessel of 1600 or more gross tons or tug with a tow of 1600 or more gross tons is navigating therein if such entry would result in meeting, crossing, or overtaking the other vessel, when either vessel is:

(A) Carrying certain dangerous cargoes (as denoted in § 160.203 of this subchapter);

(B) Carrying bulk petroleum products; or

(C) A tank vessel in ballast.

(iii) Vessels permitted to use this channel shall proceed at a reasonable speed so as not to endanger other vessels or interfere with any work which may become necessary in maintaining, surveying, or buoying the channel, and they shall not anchor in the channel except in case of a deviation authorized under paragraph (b) of this section.

(iv) This paragraph shall not be construed as prohibiting any necessary use of the channel by any public vessels while engaged in official duties, or in emergencies by pilot boats.

(3) *Benicia-Martinez Railroad Drawbridge Regulated Navigation Area (RNA)*—(i) *Eastbound vessels:* (A) The master, pilot, or person directing the movement of a power-driven vessel of 1600 or more gross tons or a tug with a tow of 1600 or more gross tons traveling eastbound and intending to transit under the lift span (centered at coordinates 38°02′18″ N, 122°07′17″ W) of the railroad bridge across Carquinez Strait at mile 7.0 shall, immediately after entering the RNA, determine whether the visibility around the lift span is ½ nautical mile or greater.

(B) If the visibility is less than ½ nautical mile, or subsequently becomes less than ½ nautical mile, the vessel shall not transit under the lift span.

(ii) *Westbound vessels:* (A) The master, pilot, or person directing the movement of a power-driven vessel of 1600 or more gross tons or a tug with a tow of 1600 or more gross tons traveling westbound and intending to transit under the lift span (centered at coordinates 38°02′18″ N, 122°07′17″ W) of the railroad bridge across Carquinez Strait at mile 7.0 shall, immediately after entering the RNA determine whether the visibility around the lift span is ½ nautical mile or greater.

(B) If the visibility is less than ½ nautical mile, the vessel shall not pass beyond longitude line 121°55′19″ W (coinciding with the charted position of

the westernmost end of Mallard Island) until the visibility improves to greater than ½ nautical mile around the lift span.

(C) If after entering the RNA visibility around the lift span subsequently becomes less than ½ nautical mile, the master, pilot, or person directing the movement of the vessel either shall not transit under the lift span or shall request a deviation from the requirements of the RNA as prescribed in paragraph (b) of this section.

(D) Vessels that are moored or anchored within the RNA with the intent to transit under the lift span shall remain moored or anchored until visibility around the lift span becomes greater than ½ nautical mile.

(4) *Southampton Shoal/Richmond Harbor RNA:* A power-driven vessel of 1600 or more gross tons, or a tug with a tow of 1600 or more gross tons, shall not enter Southampton Shoal/Richmond Harbor RNA when another power-driven vessel of 1600 or more gross tons, or a tug with a tow of 1600 or more gross tons, is navigating therein, if such entry would result in meeting, crossing, or overtaking the other vessel.

(5) *Oakland Harbor RNA:* A power-driven vessel of 1600 or more gross tons or a tug with a tow of 1600 or more gross tons shall not enter the Oakland Harbor RNA when another power-driven vessel of 1600 or more gross tons, or a tug with a tow of 1600 or more gross tons, is navigating therein, if such entry would result in meeting, crossing, or overtaking the other vessel.

[CGD11–94–007, 60 FR 16796, Apr. 3, 1995; 60 FR 30157, June 7, 1995. Redesignated by USCG–2001–9286, 66 FR 33642, June 25, 2001, as amended by USCG–2003–15404, 68 FR 37741, June 25, 2003; CGD11–03–001, 69 FR 2843, Jan. 21, 2004]

§ 165.1182 Safety/Security Zone: San Francisco Bay, San Pablo Bay, Carquinez Strait, and Suisun Bay, CA.

(a) *Regulated area.* The following area is established as a moving safety/security zone:

(1) All waters 200 yards ahead and astern and 100 yards to each side of every vessel transporting nuclear materials on behalf of the United States Department of Energy while such vessels transit from a line drawn between San Francisco Main Ship Channel buoys 7 and 8 (LLNR 4190 & 4195, positions 37°46.9′ N, 122°35.4′ W & 37°46.5′ N, 122°35.2′ W, respectively) until safely moored at the Weapons Support Facility Seal Beach Detachment Concord on Suisun Bay (position 38°03.3′ N, 122°02.5′ W). All coordinates referenced use datum: NAD 1983.

(2) All waters within 100 yards of such vessels described in paragraph (a)(1) of this section while such vessels are conducting cargo operations at the Weapons Support Facility Seal Beach Detachment Concord.

(b) *Notification.* Commander, Eleventh Coast Guard District, will cause notice of the activation of this safety/security zone to be made by all appropriate means to effect the widest publicity among the affected segments of the public, including publication in the FEDERAL REGISTER as practicable, in accordance with the provisions of 33 CFR 165.7(a); such means of announcement may include, but are not limited to, Broadcast Notice to Mariners. The Coast Guard will issue a Broadcast Notice to Mariners notifying the public when nuclear materials cargo handling has been completed.

(c) *Effective Period.* The safety/security zone will be effective commencing at the time any vessel described in paragraph (a)(1) of this section enters the zone described in paragraph (a)(1) of this section and will remain in effect until all spent nuclear materials cargo handling operations have been completed at Weapons Support Facility Seal Beach Detachment Concord.

(d) *Regulations.* The general regulations governing safety and security zones contained in both 33 CFR 165.23 in 33 CFR 165.33 apply. Entry into, transit through, or anchoring within this moving safety/security zone is prohibited unless authorized by Commander, Eleventh Coast Guard District, or his designated representative.

[CGD11–98–005, 63 FR 38754, July 20, 1998. Redesignated by USCG–2001–9286, 66 FR 33642, June 25, 2001]

§ 165.1183 Security Zones; tankers, cruise ships, and High Value Assets, San Francisco Bay and Delta Ports, Monterey Bay and Humboldt Bay, California

(a) *Definitions.* The following definitions apply to these sections—

(1) *Cruise ship* means any vessel over 100 gross register tons, carrying more than 500 passengers for hire which makes voyages lasting more than 24 hours, of which any part is on the high seas. Passengers from cruise ships are embarked or disembarked in the U.S. or its territories. Cruise ships do not include ferries that hold Coast Guard Certificates of Inspection endorsed for ''Lakes, Bays and Sounds'' that transit international waters for only short periods of time on frequent schedules.

(2) *High Value Asset* means any waterside asset of high value including military and commercial vessels, or commercial vessels carrying CDC as defined in 33 CFR 160.204, deemed by the Captain of Port, or higher authority, as requiring protection based upon risk assessment analysis and is therefore escorted by the Coast Guard or other law enforcement vessel with an embarked Coast Guard commissioned, warrant, or petty officer.

(3) *Tanker* means any self-propelled tank vessel constructed or adapted primarily to carry oil or hazardous materials in bulk in the cargo spaces.

(4) *Designated representative* means any commissioned, warrant, and petty officers of the Coast Guard on board Coast Guard, Coast Guard Auxiliary, and local, State and Federal law enforcement vessels who have been authorized to act on the behalf of the Captain of the Port.

(b) *Locations.*

(1) *San Francisco Bay.* All waters, extending from the surface to the sea floor, within 500 yards (457 meters) ahead, astern and extending along either side of a tanker, cruise ship, or HVA underway (100 yards when anchored or moored) within the San Francisco Bay and areas shoreward of the line drawn between San Francisco Main Ship Channel buoys 7 and 8(LLNR 4190 & 4195) in positions 37°46.9′ N, 122°35.4′ W and 37°46.5′ N, 122°35.2′ W, respectively.

(2) *Monterey Bay.* All waters, extending from the surface to the sea floor, within 500 yards (457 meters) ahead, astern and extending along either side of a tanker, cruise ship, or HVA underway (100 yards when anchored or moored) within the Monterey Bay area shoreward of a line drawn between Santa Cruz Light (LLNR 305) to the north in position 36°57.10′ N, 122°01.60′ W, and Cypress Point, Monterey to the south, in position 36°34.90′ N, 121°58.70′ W.

(3) *Humboldt Bay.* All waters, extending from the surface to the sea floor, within 500 yards (457 meters) ahead, astern and extending along either side of a tanker, cruise ship, or HVA underway (100 yards when anchored or moored) within the Humboldt Bay area shoreward of a 4 nautical mile radius line drawn to the west of the Humboldt Bay Entrance Lighted Whistle Buoy HB (LLNR 8130) in position 40°46.25′ N, 124°16.13′ W.

(c) *Regulations.* (1) In accordance with the general regulations in § 165.33 of this part, entry into or remaining in this zone is prohibited unless authorized by the Coast Guard Captain of the Port, San Francisco Bay, or a designated representative.

(2) Mariners requesting permission to transit through the security zone may request authorization to do so from the Patrol Commander (PATCOM). The PATCOM may be contacted on VHF–FM Channel 16.

(3) All persons and vessels shall comply with the instructions of the Captain of the Port or the designated representative.

(4) Upon being hailed by U.S. Coast Guard patrol personnel by siren, radio, flashing light, or other means, the operator of a vessel shall proceed as directed.

(5) The Coast Guard may be assisted by other Federal, State, or local agencies.

[USCG–2010–1004, 76 FR 20845, Apr. 14, 2011]

§ 165.1184 Safety Zone; Coast Guard Use of Force Training Exercises, San Pablo Bay, CA.

(a) *Location.* This safety zone will apply to the navigable waters in the San Pablo Bay, and will encompass an area beginning at position 38°01′44″ N,

122°27′06″ W; 38°04′36″ N, 122°22′06″ W; 38°00′35″ N, 122°26′07″ W; 38°03′00″ N, 122°20′20″ W (NAD 83) and back to the starting point.

(b) *Enforcement*. The Coast Guard will notify the public via a Broadcast Notice to Mariners prior to the activation of this safety zone. The safety zone will be activated on average two times per month, but could be activated up to six times per month. It will be in effect for approximately three hours from 9 a.m. to 11:59 p.m. If the exercises conclude prior to the scheduled termination time, the Coast Guard will cease enforcement of this safety zone and will announce that fact via Broadcast Notice to Mariners. Persons and vessels may also contact the Coast Guard to determine the status of the safety zone on VHF–16 or the 24-hour Command Center via telephone at (415) 399–3547.

(c) *Definitions*. As used in this section, designated representative means a Coast Guard Patrol Commander, including a Coast Guard coxswain, petty officer, or other officer operating a Coast Guard vessel and a Federal, State, and local officer designated by or assisting the Captain of the Port San Francisco (COTP) in the enforcement of the safety zone.

(d) *Regulations*. (1) Under the general regulations in §165.23, entry into, transiting, or anchoring within the safety zone is prohibited unless authorized by the COTP or the COTP's designated representative.

(2) The safety zone is closed to all vessel traffic, except as may be permitted by the COTP or the COTP's designated representative.

(3) Vessel operators desiring to enter or operate within the safety zone must contact the COTP or the COTP's representative to obtain permission to do so. Vessel operators given permission to enter or operate in the safety zone must comply with all directions given to them by the COTP or the COTP's designated representative. Persons and vessels may request permission to enter the safety zone on VHF–16 or the 24-hour Command Center via telephone at (415) 399–3547.

[USCG–2009–0324, 76 FR 25550, May 5, 2011]

§ 165.1185 Regulated Navigation Area; San Francisco Bay, San Pablo Bay, Carquinez Strait, Suisun Bay, Sacramento River, San Joaquin River, and connecting waters in California.

(a) *Location*. All waters of San Francisco Bay, San Pablo Bay, Carquinez Strait, Suisun Bay, Sacramento River, San Joaquin River, and connecting waters in California are a Regulated Navigation Area.

(b) *Definitions*. ''Liquefied hazardous gas (LHG)'' is a liquid containing one or more of the products listed in Table 127.005 of 33 CFR 127.005 that is carried in bulk on board a tank vessel as a liquefied gas product. The hazards normally associated with these products include toxic or flammable properties or a combination of both.

(c) *Regulations*. All vessels loaded with a cargo of liquefied hazardous gas (LHG) within this Regulated Navigation Area must proceed directly to their intended cargo reception facility to discharge their LHG cargo, unless:

(1) The vessel is otherwise directed or permitted by the Captain of the Port. The Captain of the Port can be reached at telephone number (415) 399–3547 or on VHF-FM channel 16 (156.8 MHz). If permission is granted, all persons and vessels must comply with the instructions of the Captain of the Port or his or her designated representative.

(2) The vessel is in an emergency situation and unable to proceed as directed in paragraph (a) of this section without endangering the safety of persons, property, or the environment.

[CGD11 04–001, 69 FR 30206, May 27, 2004]

§ 165.1187 Security Zones; Golden Gate Bridge and the San Francisco-Oakland Bay Bridge, San Francisco Bay, California.

(a) *Location*. All waters extending from the surface to the sea floor, within 25 yards of all piers, abutments, fenders and pilings of the Golden Gate Bridge and the San Francisco-Oakland Bay Bridge, in San Francisco Bay, California.

(b) *Regulations*. (1) In accordance with the general regulations in §165.33 of this part, entry into these security zones is prohibited, unless doing so is

necessary for safe navigation, to conduct official business such as scheduled maintenance or retrofit operations, or unless specifically authorized by the Captain of the Port San Francisco Bay or his designated representative.

(2) Persons desiring to transit the area of the security zone may contact the Captain of the Port at telephone number 415–399–3547 or on VHF-FM channel 16 (156.8 MHz) to seek permission to transit the area. If permission is granted, all persons and vessels must comply with the instructions of the Captain of the Port or his or her designated representative.

(c) *Enforcement.* All persons and vessels shall comply with the instructions of the Coast Guard Captain of the Port or the designated on-scene patrol personnel. Patrol personnel comprise commissioned, warrant, and petty officers of the Coast Guard onboard Coast Guard, Coast Guard Auxiliary, local, state, and federal law enforcement vessels. Upon being hailed by U.S. Coast Guard patrol personnel by siren, radio, flashing light, or other means, the operator of a vessel shall proceed as directed.

[COTP San Francisco Bay 03–029, 69 FR 11316, Mar. 10, 2004]

§ 165.1190 Security Zone; San Francisco Bay, Oakland Estuary, Alameda, CA.

(a) *Location.* The following area is a security zone: All navigable waters of the Oakland Estuary, California, from the surface to the sea floor, approximately 50 yards into the Oakland Estuary surrounding the Coast Guard Island Pier. The perimeter of the security zone follows the same perimeter as the floating security barrier installed around the Coast Guard Island pier. The perimeter of the security barrier is located along the following coordinates: commencing at a point on land approximately 50 yards northwest of the northwestern end of the Coast Guard Island Pier at latitude 37°46′53.60″ N and longitude 122°15′06.10″ W; thence to the edge of the navigable channel at latitude 37°46′51.83″ N and longitude 122°15′07.47″ W; thence to a position approximately 10 yards into the charted navigation channel at latitude 37°46′51.27″ N and longitude 122°15′07.22″ W; thence closely paralleling the edge of the charted navigation channel to latitude 37°46′46.75″ N and longitude 122°15′00.21″ W; thence closely paralleling the edge of the charted navigation channel to a point approximately 20 yards into the charted navigation channel at latitude 37°46′42.36″ N and longitude 122°14′51.55″ W; thence to a point on land approximately 50 yards southeast of the southeastern end of the Coast Guard Island Pier at latitude 37°46′44.80″ N and longitude 122°14′48.80″ W; thence northwest along the shoreline back to the beginning point.

(b) *Regulations.* (1) Under § 165.33, entry into or remaining in this zone is prohibited unless authorized by the Coast Guard Captain of the Port, San Francisco Bay, or his designated representative.

(2) Persons desiring to transit the area of the security zone may contact the Captain of the Port at telephone number 415–399–3547 or on VHF-FM channel 16 (156.8 MHz) to seek permission to transit the area. If permission is granted, all persons and vessels must comply with the instructions of the Captain of the Port or his designated representative.

(c) *Enforcement.* The Captain of the Port will enforce this security zone and may be assisted in the patrol and enforcement of this security zone by any Federal, State, county, municipal, or private agency.

[COTP San Francisco Bay 05–006, 70 FR 48874, Aug. 22, 2005]

§ 165.1191 Northern California and Lake Tahoe Area Annual Fireworks Events.

(a) *General.* Safety zones are established for the events listed in Table 1 of this section. Further information on exact dates, times, and other details concerning the exact geographical description of the areas are published by the Eleventh Coast Guard District in the Local Notice to Mariners at least 20 days prior to the event.

(b) *Regulations.* All persons and vessels not registered with the sponsor as participants or as official patrol vessels are considered spectators. The ''official patrol'' consists of any Coast Guard; other Federal, state, or local

law enforcement; and any public or sponsor-provided vessels assigned or approved by the cognizant Coast Guard Sector Commander to patrol each event.

(1) No spectator shall anchor, block, loiter, nor impede the through transit of participants or official patrol vessels in the safety zone during all applicable effective dates and times unless cleared to do so by or through an official patrol vessel.

(2) When hailed and/or signaled by an official patrol vessel, any spectator located within a safety zone during all applicable effective dates and times shall come to an immediate stop.

(3) The Patrol Commander (PATCOM) is empowered to forbid and control the movement of all vessels in the safety zone. The Patrol Commander shall be designated by the cognizant Coast Guard Sector Commander; will be a U.S. Coast Guard commissioned officer, warrant officer, or petty officer to act as the Sector Commander's official representative; and will be located aboard the lead official patrol vessel. As the Sector Commander's representative, the PATCOM may terminate the event any time it is deemed necessary for the protection of life and property. PATCOM may be reached on VHF–FM Channel 13 (156.65MHz) or 16 (156.8MHz) when required, by the call sign ''PATCOM''.

(4) The Patrol Commander may, upon request, allow the transit of commercial vessels through the safety zone when it is safe to do so.

(5) The Coast Guard may be assisted by other Federal, state, or local agencies.

TABLE 1 TO § 165.1191

[All coordinates referenced use datum NAD 83]

1. San Francisco Giants Fireworks	
Sponsor	San Francisco Giants Baseball Team.
Event Description	Fireworks display in conjunction with baseball season home games.
Date	All season home games at AT&T Park.
Location	700 feet off of Pier 48, San Francisco, CA.
Regulated Area	100-foot radius around the fireworks launch barge during the loading of pyrotechnics aboard the fireworks barge and during the transit of the fireworks barge from the loading location to the display location. Increases to a 700-foot radius upon commencement of the fireworks display.

2. KFOG KaBoom	
Sponsor	KFOG Radio, San Francisco, CA.
Event Description	Fireworks Display.
Date	Second or Third Saturday in May.
Location	1,200 feet off Candlestick Point, San Francisco, CA.
Regulated Area	100-foot radius around the fireworks launch barge during the loading of pyrotechnics aboard the fireworks barge and during the transit of the fireworks barge from the loading location to the display location. Increases to a 1,000-foot radius upon commencement of the fireworks display.

3. Fourth of July Fireworks, City of Eureka	
Sponsor	City of Eureka, CA.
Event Description	Fireworks Display.
Date	July 4th.
Location	Humboldt Bay, CA.

TABLE 1 TO § 165.1191—Continued

[All coordinates referenced use datum NAD 83]

Regulated Area	100-foot radius around the fireworks launch barge during the loading of pyrotechnics aboard the fireworks barge and during the transit of the fireworks barge from the loading location to the display location. Increases to a 1,000-foot radius upon commencement of the fireworks display.
4. Fourth of July Fireworks, Crescent City	
Sponsor	Crescent City, CA.
Event Description	Fireworks Display.
Date	July 4th.
Location	Crescent City Harbor, Crescent City, CA.
Regulated Area	Crescent City Harbor in the navigable waters within a 700-foot radius of the launch platform located on the West Jetty.
5. Pillar Point Harbor Fireworks	
Sponsor	Various sponsors.
Event Description	Fireworks Display.
Date	July 4th.
Location	Half Moon Bay, CA.
Regulated Area	Pillar Point Harbor Beach.
6. Fourth of July Fireworks, Redwood City	
Sponsor	Various Sponsors.
Event Description	Fireworks Display.
Date	July 4th.
Location	Redwood City, CA.
Regulated Area	600-foot radius around the fireworks launch platform located on the pier at the Port of Redwood City.
7. San Francisco Independence Day Fireworks	
Sponsor	The City of San Francisco.
Event Description	Fireworks Display.
Date	July 4th.
Location 1	A barge located approximately 1000 feet off San Francisco Pier 39 at approximately 37°48′49″ N, 122°24′46″ W.
Location 2	Land based launch at the end of the San Francisco Municipal Pier at Aquatic Park at approximately 37°48′38″ N, 122°25′28″ W.
Regulated Area 1	1. 100-foot radius around the fireworks barge during the loading, transit, setup, and until the commencement of the scheduled display. Increases to a 1,000-foot radius upon commencement of the fireworks display.
Regulated Area 2	2. The area of navigable waters within a 1,000-foot radius of the launch platform located on the Municipal Pier.
8. Fourth of July Fireworks, Berkeley Marina	
Sponsor	Berkeley Marina.
Event Description	Fireworks Display.
Date	July 4th.
Location	Berkeley Pier, Berkeley, CA.
Regulated Area	The area of navigable waters within a 1,000-foot radius of the launch platform located on the Berkeley Pier.

TABLE 1 TO § 165.1191—Continued

[All coordinates referenced use datum NAD 83]

9. Fourth of July Fireworks, City of Richmond	
Sponsor	City of Richmond.
Event Description	Fireworks Display.
Date	Week of July 4th.
Location	Richmond Harbor, Richmond, CA.
Regulated Area	The area of navigable waters within a 560-foot radius of the launch platform located at Lucretia Edwards Park.
10. Fourth of July Fireworks, City of Sausalito	
Sponsor	City of Sausalito.
Event Description	Fireworks Display.
Date	July 4th.
Location	1,000 feet off-shore from Sausalito, CA waterfront, north of Spinnaker Restaurant.
Regulated Area	100-foot radius around the fireworks launch barge during the loading of pyrotechnics aboard the fireworks barge and during the transit of the fireworks barge from the loading location to the display location. Increases to a 1,000-foot radius upon commencement of the fireworks display.
11. Fourth of July Fireworks, City of Martinez	
Sponsor	City of Martinez.
Event Description	Fireworks Display.
Date	July 4th.
Location	Carquinez Strait, CA
Regulated Area	The area of navigable waters within a 560-foot radius of the launch platform located near Waterfront Park.
12. Fourth of July Fireworks, City of Antioch	
Sponsor	City of Antioch.
Event Description	Fireworks Display.
Date	July 4th.
Location	San Joaquin River, CA.
Regulated Area	100-foot radius around the fireworks launch barge during the loading of pyrotechnics aboard the fireworks barge and during the transit of the fireworks barge from the loading location to the display location. Increases to a 1,000-foot radius upon commencement of the moving fireworks display.
13. Fourth of July Fireworks, City of Pittsburg	
Sponsor	City of Pittsburg.
Event Description	Fireworks Display.
Date	July 4th.
Location	Suisun Bay, CA.
Regulated Area	The area of navigable waters within a 560-foot radius of the launch platform located on a Pittsburg Marina Pier.
14. Delta Independence Day Celebration Fireworks	
Sponsor	Various Sponsors.
Event Description	Fireworks Display.
Date	Week of July 4th.

TABLE 1 TO § 165.1191—Continued

[All coordinates referenced use datum NAD 83]

Location	San Joaquin River, near Mandeville Island, CA.
Regulated Area	100-foot radius around the fireworks launch barge during the loading of pyrotechnics aboard the fireworks barge and during the transit of the fireworks barge from the loading location to the display location. Increases to a 1,000-foot radius upon commencement of the fireworks display.
15. Fourth of July Fireworks, Tahoe City, CA	
Sponsor	Various Sponsors.
Event Description	Fireworks Display.
Date	July 4th.
Location	Off-shore from Common Beach, Tahoe City, CA.
Regulated Area	100-foot radius around the fireworks launch barge during the loading of pyrotechnics aboard the fireworks barge and during the transit of the fireworks barge from the loading location to the display location. Increases to a 1,000-foot radius upon commencement of the fireworks display.
16. Fourth of July Fireworks, Glenbrook NV	
Sponsor	Various Sponsors.
Event Description	Fireworks Display.
Date	July 4th.
Location	Off-shore Glenbrook Beach, NV.
Regulated Area	100-foot radius around the fireworks launch barge during the loading of pyrotechnics aboard the fireworks barge and during the transit of the fireworks barge from the loading location to the display location. Increases to a 1,000-foot radius upon commencement of the fireworks display.
17. Independence Day Fireworks, Kings Beach, CA	
Sponsor	North Tahoe Business Association.
Event Description	Fireworks Display.
Date	Week of July 4th.
Location	Off-shore from Kings Beach, CA.
Regulated Area	100-foot radius around the fireworks launch barge during the loading of pyrotechnics aboard the fireworks barge and during the transit of the fireworks barge from the loading location to the display location. Increases to a 1,000-foot radius upon commencement of the fireworks display.
18. Lights on the Lake Fourth of July Fireworks, South Lake Tahoe, CA	
Sponsor	Various Sponsors.
Event Description	Fireworks Display.
Date	Week of July 4th.
Location	Off South Lake Tahoe, CA near the NV Border.
Regulated Area	100-foot radius around the fireworks launch barge during the loading of pyrotechnics aboard the fireworks barge and during the transit of the fireworks barge from the loading location to the display location. Increases to a 1,000-foot radius upon commencement of the fireworks display.

TABLE 1 TO § 165.1191—Continued

[All coordinates referenced use datum NAD 83]

19. Red, White, and Tahoe Blue Fireworks, Incline Village, NV	
Sponsor	Various Sponsors.
Event Description	Fireworks Display.
Date	Week of July 4th.
Location	500–1,000 feet off Incline Village, NV in Crystal Bay.
Regulated Area	100-foot radius around the fireworks launch barge during the loading of pyrotechnics aboard the fireworks barge and during the transit of the fireworks barge from the loading location to the display location. Increases to a 1,000-foot radius upon commencement of the fireworks display.
20. Labor Day Fireworks, South Lake Tahoe, CA	
Sponsor	Various Sponsors.
Event Description	Fireworks Display.
Date	Labor Day.
Location	Off South Lake Tahoe, California near the Nevada Border.
Regulated Area	100-foot radius around the fireworks launch barge during the loading of pyrotechnics aboard the fireworks barge and during the transit of the fireworks barge from the loading location to the display location. Increases to a 1,000-foot radius upon commencement of the fireworks display.
21. Fleet Week Fireworks	
Sponsor	Various Sponsors.
Event Description	Fireworks Display.
Date	Second Friday and Saturday in October.
Location	1,000 feet off Pier 3, San Francisco, CA.
Regulated Area	100-foot radius around the fireworks launch barge during the loading of pyrotechnics aboard the fireworks barge and during the transit of the fireworks barge from the loading location to the display location. Increases to a 1,000-foot radius upon commencement of the fireworks display.
22. Monte Foundation Fireworks	
Sponsor	Monte Foundation Fireworks.
Event Description	Fireworks Display.
Date	Second Saturday in October.
Location	Sea Cliff State Beach Pier in Aptos, CA.
Regulated Area	1,000-foot safety zone around the navigable waters of the Sea Cliff State Beach Pier.
23. Rio Vista Bass Derby Fireworks	
Sponsor	Rio Vista Chamber of Commerce.
Event Description	Fireworks Display.
Date	Second Saturday in October.
Location	500 feet off Rio Vista, CA waterfront.
Regulated Area	100-foot radius around the fireworks launch barge during the loading of pyrotechnics aboard the fireworks barge and during the transit of the fireworks barge from the loading location to the display location. Increases to a 1,000-foot radius upon commencement of the fireworks display.

TABLE 1 TO § 165.1191—Continued

[All coordinates referenced use datum NAD 83]

24. San Francisco New Years Eve Fireworks	
Sponsor	City of San Francisco.
Event Description	Fireworks Display.
Date	New Years Eve, December 31st.
Location	1,000 feet off the Embarcadero near the Ferry Plaza, San Francisco, CA.
Regulated Area	100-foot radius around the fireworks launch barge during the loading of pyrotechnics aboard the fireworks barge and during the transit of the fireworks barge from the loading location to the display location. Increases to a 1,000-foot radius upon commencement of the fireworks display.
25. Sacramento New Years Eve Fireworks	
Sponsor	Various Sponsors.
Event Description	Fireworks Display.
Date	New Years Eve, December 31st.
Location	Near Tower Bridge, Sacramento River.
Regulated Area	The navigable waters of the Sacramento River within 700 feet of the two shore-based launch locations in approximate positions 38°34′48″ N, 121°30′38″ W and 38°34′49″ N, 121°30′29″ W.
26. Jameson Beach Fourth of July Fireworks	
Sponsor	Various Sponsors
Event Description	Fireworks Display.
Date	Week of July 4th.
Location	South Lake Tahoe near Jameson Beach.
Regulated Area	100-foot radius around the fireworks barge during the loading, transit, setup, and until the commencement of the scheduled display. Increases to a 560-foot radius upon commencement of the fireworks display.
27. Feast of Lanterns Fireworks	
Sponsor	Feast of Lanterns, Inc.
Event Description	Fireworks Display.
Date	Last Saturday of July.
Location	Near Lover's Point Park in Pacific Grove, CA.
Regulated Area	The area of navigable waters within a 490-foot radius of the launch platform located on the beach near Lover's Point Park in approximate position 36°37′26″ N, 121°54′54″ W.

[USCG–2009–0559, 76 FR 50675, Aug. 16, 2011, as amended by USCG–2013–0362, 79 FR 9093, Feb. 18, 2014]

§ 165.1192 Security Zones; Waters surrounding San Francisco International Airport and Oakland International Airport, San Francisco Bay, California.

(a) *Locations.* The following areas are security zones:

(1) *San Francisco International Airport Security Zone.* This security zone includes all waters extending from the surface to the sea floor within approximately 200 yards seaward from the shoreline of the San Francisco International Airport and encompasses all waters in San Francisco Bay within a

line connecting the following geographical positions—

Latitude	Longitude
37°36′19″ N	122°22′36″ W
37°36′45″ N	122°122′18″ W
37°36′26″ N	122°21′30″ W
37°36′31″ N	122°21′21″ W
37°36′17″ N	122°20′45″ W
37°36′37″ N	122°20′40″ W
37°36′50″ N	122°21′08″ W
37°37′00″ N	122°21′12″ W
37°37′21″ N	122°21′53″ W
37°37′39″ N	122°21′44″ W
37°37′56″ N	122°21′51″ W
37°37′50″ N	122°22′20″ W
37°38′25″ N	122°22′54″ W
37°38′23″ N	122°23′01″ W

and along the shoreline back to the beginning point.

(2) *Oakland International Airport Security Zone*. This security zone includes all waters extending from the surface to the sea floor within approximately 200 yards seaward from the shoreline of the Oakland International Airport and encompasses all waters in San Francisco Bay within a line connecting the following geographical positions—

Latitude	Longitude
37°43′35″ N	122°15′00″ W
37°43′40″ N	122°15′05″ W
37°43′34″ N	122°15′12″ W
37°43′24″ N	122°15′11″ W
37°41′54″ N	122°13′05″ W
37°41′51″ N	122°12′48″ W
37°41′53″ N	122°12′44″ W
37°41′35″ N	122°12′18″ W
37°41′46″ N	122°12′08″ W
37°42′03″ N	122°12′34″ W
37°42′08″ N	122°12′32″ W
37°42′35″ N	122°12′30″ W
37°42′40″ N	122°12′06″ W

and along the shoreline back to the beginning point.

(b) *Regulations*. (1) Under § 165.33, entering, transiting through, or anchoring in this zone is prohibited unless authorized by the Coast Guard Captain of the Port, San Francisco Bay, or his designated representative.

(2) Persons desiring to transit the area of a security zone may contact the Captain of the Port at telephone number 415–399–3547 or on VHF-FM channel 16 (156.8 MHz) to seek permission to transit the area. If permission is granted, all persons and vessels must comply with the instructions of the Captain of the Port or his or her designated representative.

(c) *Enforcement*. All persons and vessels shall comply with the instructions of the Coast Guard Captain of the Port or the designated on-scene patrol personnel. Patrol personnel comprise commissioned, warrant, and petty officers of the Coast Guard onboard Coast Guard, Coast Guard Auxiliary, local, state, and federal law enforcement vessels. Upon being hailed by U.S. Coast Guard patrol personnel by siren, radio, flashing light, or other means, the operator of a vessel shall proceed as directed.

[COTP San Francisco Bay 03–009, 69 FR 34282, June 21, 2004]

§ 165.1195 Regulated Navigation Area; Humboldt Bay Bar Channel and Humboldt Bay Entrance Channel, Humboldt Bay, California.

(a) *Location*. The Regulated Navigation Area (RNA) includes all navigable waters of the Humboldt Bay Bar Channel and the Humboldt Bay Entrance Channel, Humboldt Bay, California.

(b) *Definitions*. As used in this section—

COTP means the Captain of the Port as defined in Title 33, Code of Federal Regulations, Section 1.01–30 and 3.55–20.

Sector means Coast Guard Sector/Air Station Humboldt Bay.

Sector Commander means the Commanding Officer of Coast Guard Sector/Air Station Humboldt Bay.

Hazardous material means any of the materials or substances listed in 46 CFR 153.40.

Humboldt Bay Area means the area described in the location section of this regulation.

Oil means oil of any kind or in any form, including but not limited to, petroleum, fuel oil, sludge, oil refuse, and oil mixed with wastes other than dredged spoil.

Station means Coast Guard Station Humboldt Bay.

Tank Vessel means any vessel that is constructed or adapted to carry, or that carries, oil or hazardous material in bulk as cargo or cargo residue.

(c) *Applicability*. These regulations apply to the owners and operators of tank vessels transporting oil or hazardous material as cargo within the Humboldt Bay Area.

(d) *Regulations.* (1) In addition to the arrival and departure notification requirements listed in title 33 CFR, part 160, Ports and Waterways Safety—General, subpart C—Notifications of ''Arrivals, Departures, Hazardous Conditions, and Certain Dangerous Cargoes'', the owner, master, agent or person in charge of a vessel to which this notice applies shall obtain permission to cross within four hours of crossing the Humboldt Bay Bar. Between 6:30 a.m. and 10 p.m., notification/requests for permission can be made to Station Humboldt Bay on VHF-FM Channel 16, or at (707) 443–2213. If between 10 p.m. and 6:30 a.m., or if unable to reach the Station, notification/requests for permission can be made directly to Sector/Air Station Humboldt Bay on VHF-FM Channel 16 or at (707) 839–6113.

(2) Permission for a bar crossing by vessels or towing vessels and their tows to which this regulation applies is dependent on environmental and safety factors, including but not limited to: Sea state, winds, visibility, size and type of vessel or tow, wave period, time of day/night, and tidal currents. The final decision to close the bar rests with Humboldt Bay Sector Commander or his designated representative. At a minimum, Humboldt Bay Bar Channel crossings by vessels subject to this advisory will generally not be permitted unless all of the following conditions exist: Proper permission to cross has been received, sea conditions at the bar are less than 6 feet, winds at the bar are less than 30 knots, the transit will take place during daylight hours, the vessel has only a single tow or no tow, the visibility at the bar is greater than 1,000 yards, and the vessel and tow are in proper operating condition.

(3) If the bar is closed to vessels to which this regulation applies, waiver requests will be accepted within four hours of crossing the entrance channel. If the waiver request is made between 6:30 a.m. and 10 p.m., the request should be made to Station Humboldt Bay on VHF-FM Channel 16, or at (707) 443–2213. If between 10 p.m. and 6:30 a.m., or if unable to reach the Station, the request can be made directly to Sector/Air Station Humboldt Bay on VHF-FM Channel 16 or at (707) 839–6113. Waiver requests must be made by the vessel master and must provide the following: A description of the proposed operation, the conditions for which the waiver is requested, the reasons for requesting the waiver, the reasons that the requester believes the proposed operation can be accomplished safely, and a callback phone number. The Station or Sector Watchstander receiving the request will brief the Officer in Charge of the Station who will then brief the Sector Commander. The authority to grant waivers rests with the Sector Commander or his designated representative.

(4) In addition to the requirements in paragraphs (d)(1)–(3) of this section, vessels transporting liquefied hazardous gases or compressed hazardous gases in bulk as cargo into or out of Humboldt Bay are required to be aided by two assist tugs. If the vessel carrying the gases is towed, the assist tug requirement is in addition to the towing tug. The assist tugs shall escort the vessel through its transit and must be stationed so as to provide immediate assistance in response to the loss of power or steering of the cargo vessel, its towing tug, or loss of control over the tow.

(5) Vessels to which this regulation applies may be required by the Sector Commander or his designated representative to be escorted by a Coast Guard vessel during their transit. In addition, if a vessel master, agent, or pilot has concerns about the safety of a vessel's transit through the Humboldt Bay Entrance Channel, a Coast Guard escort may be requested. Requests for an escort should be directed to Station on VHF-FM channel 16 or at (707) 443–2213 between 6:30 a.m. and 10 p.m., or to Sector on VHF-FM channel 16 or at (707) 839–6113 if between 10 p.m. and 6:30 a.m.

(e) *Enforcement.* Acting as a representative of the Captain of the Port, the Humboldt Bay Sector Commander will enforce this regulation and has the authority to take steps necessary to ensure the safe transit of vessels in Humboldt Bay. The Sector Commander can enlist the aid and cooperation of any Federal, State, county, and municipal agency to assist in the enforcement of the regulation. All persons and

vessels shall comply with the instructions of the Sector Commander or the designated on-scene patrol personnel. Patrol personnel comprise commissioned, warrant, and petty officers of the Coast Guard onboard Coast Guard, Coast Guard Auxiliary, local, State, and Federal law enforcement vessels.

Upon being hailed by U.S. Coast Guard patrol personnel by siren, radio, flashing light, or other means, the operator of a vessel shall proceed as directed.

[CGD11–05–006, 70 FR 49492, Aug. 24, 2005]

§ 165.1197 Security Zones; San Francisco Bay, San Pablo Bay, Carquinez Strait, Suisun Bay, California.

(a) *Locations*. The following areas are security zones:

(1) *Chevron Long Wharf, San Francisco Bay*. This security zone includes all waters extending from the surface to the sea floor within approximately 100 yards of the Chevron Long Wharf, Richmond, CA, and encompasses all waters in San Francisco Bay within a line connecting the following geographical positions—

Latitude	Longitude
37°55′52.2″ N	122°24′04.7″ W
37°55′41.8″ N	122°24′07.1″ W
37°55′26.8″ N	122°24′35.9″ W
37°55′47.1″ N	122°24′55.5″ W
37°55′42.9″ N	122°25′03.5″ W
37°55′11.2″ N	122°24′32.8″ W
37°55′14.4″ N	122°24′27.5″ W
37°55′19.7″ N	122°24′23.7″ W
37°55′22.2″ N	122°24′26.2″ W
37°55′38.5″ N	122°23′56.9″ W
37°55′47.8″ N	122°23′53.3″ W

and along the shoreline back to the beginning point.

(2) *Conoco-Phillips, San Pablo Bay*. This security zone includes all waters extending from the surface to the sea floor within approximately 100 yards of the Conoco-Phillips Wharf, Rodeo, CA, and encompasses all waters in San Pablo Bay within a line connecting the following geographical positions—

Latitude	Longitude
38°03′06.0″ N	122°15′32.4″ W
38°03′20.7″ N	122°15′35.8″ W
38°03′21.8″ N	122°15′29.8″ W
38°03′29.1″ N	122°15′31.8″ W
38°03′23.8″ N	122°15′55.8″ W
38°03′16.8″ N	122°15′53.2″ W
38°03′18.6″ N	122°15′45.2″ W
38°03′04.0″ N	122°15′42.0″ W

and along the shoreline back to the beginning point.

(3) *Shell Terminal, Carquinez Strait*. This security zone includes all waters extending from the surface to the sea floor within approximately 100 yards of the Shell Terminal, Martinez, CA, and encompasses all waters in San Pablo Bay within a line connecting the following geographical positions—

Latitude	Longitude
38°01′39.8″ N	122°07′40.3″ W
38°01′54.0″ N	122°07′43.0″ W
38°01′56.9″ N	122°07′37.9″ W
38°02′02.7″ N	122°07′42.6″ W
38°01′49.5″ N	122°08′08.7″ W
38°01′43.7″ N	122°08′04.2″ W
38°01′50.1″ N	122°07′50.5″ W
38°01′36.3″ N	122°07′47.6″ W

and along the shoreline back to the beginning point.

(4) *Amorco Pier, Carquinez Strait*. This security zone includes all waters extending from the surface to the sea floor within approximately 100 yards of the Amorco Pier, Martinez, CA, and encompasses all waters in the Carquinez Strait within a line connecting the following geographical positions—

Latitude	Longitude
38°02′03.1″ N	122°07′11.9″ W
38°02′05.6″ N	122°07′18.9″ W
38°02′07.9″ N	122°07′14.9″ W
38°02′13.0″ N	122°07′19.4″ W
38°02′05.7″ N	122°07′35.9″ W
38°02′00.5″ N	122°07′31.1″ W
38°02′01.8″ N	122°07′27.3″ W
38°01′55.0″ N	122°07′11.0″ W

and along the shoreline back to the beginning point.

(5) *Valero, Carquinez Strait*. This security zone includes all waters extending from the surface to the sea floor within approximately 100 yards of the Valero Pier, Benicia, CA, and encompasses all waters in the Carquinez Strait within a line connecting the following geographical positions—

Latitude	Longitude
38°02′37.6″ N	122°07′51.5″ W
38°02′34.7″ N	122°07′48.9″ W
38°02′44.1″ N	122°07′34.9″ W
38°02′48.0″ N	122°07′37.9″ W

Latitude	Longitude
38°02′47.7″ N	122°07′42.1″ W

and along the shoreline back to the beginning point.

(6) *Avon Pier, Suisun Bay*. This security zone includes all waters extending from the surface to the sea floor within approximately 100 yards of the Avon Pier, Martinez, CA, and encompasses all waters in Suisun Bay within a line connecting the following geographical positions—

Latitude	Longitude
38°02′24.6″ N	122°04′52.9″ W
38°02′54.0″ N	122°05′19.5″ W
38°02′55.8″ N	122°05′16.1″ W
38°03′02.1″ N	122°05′19.4″ W
38°02′55.1″ N	122°05′42.6″ W
38°02′48.8″ N	122°05′39.2″ W
38°02′52.4″ N	122°05′27.7″ W
38°02′46.5″ N	122°05′22.4″ W

and along the shoreline back to the beginning point.

(b) *Regulations*. (1) In accordance with the general regulations in § 165.33, entry into the security zones described in paragraph (a) of this section is prohibited, unless specifically authorized by the Captain of the Port San Francisco Bay, or his designated representative.

(2) Persons desiring to transit the area of a security zone may contact the Captain of the Port at telephone number 415–399–3547 or on VHF-FM channel 16 (156.8 MHz) to seek permission to transit the area. If permission is granted, all persons and vessels must comply with the instructions of the Captain of the Port or his designated representative.

(c) *Enforcement*. The U.S. Coast Guard may be assisted in the patrol and enforcement of these security zones by federal, state and local law enforcement as necessary.

[COTP San Francisco Bay 05–007, 71 FR 12138, Mar. 9, 2006]

§ 165.1198 Safety zone; Military Ocean Terminal Concord Safety Zone, Suisun Bay, Military Ocean Terminal Concord, CA.

(a) *Location*. This safety zone is established in the navigable waters of Suisun Bay near Military Ocean Terminal Concord, CA (MOTCO) as depicted in National Oceanic and Atmospheric Administration (NOAA) Chart 18656. Upon commencement of military onloads and offloads, the safety zone will encompass the navigable waters in the area between 500 yards of MOTCO Pier 2 in position 38°03′30″ N, 122°01′14″ W (NAD 83) as depicted in National Oceanic and Atmospheric Administration (NOAA) Chart 18656 (the perimeter of the existing security zone) and 3,000 yards of the pier.

(b) *Enforcement period*. The zone described in paragraph (a) of this section will be enforced during all military onload and offload operations. The Captain of the Port San Francisco (COTP) will notify the maritime community of periods during which this zone will be enforced via actual notice on-scene during military onloads and offloads.

(c) *Regulations*. (1) The safety zone is open to all persons and vessels for transitory use.

(2) Persons and vessels operating within the safety zone may not anchor or otherwise loiter within the safety zone.

(3) Vessel operators desiring to anchor or otherwise loiter within the safety zone must contact Sector San Francisco Vessel Traffic Service at (415) 556–2760 or VHF Channel 14 to obtain permission.

(4) All persons and vessels transiting through or operating within the safety zone must comply with all directions given to them by the COTP or a designated representative.

(5) The public can contact Sector San Francisco Bay at (415) 399–3530 to obtain information concerning enforcement of this rule.

(d) *Enforcement*. All persons and vessels must comply with the instructions of the COTP or the designated on-scene patrol personnel. Patrol personnel comprise commissioned, warrant, and petty officers of the Coast Guard onboard Coast Guard, Coast Guard Auxiliary, local, state, and federal law enforcement vessels. The U.S. Coast Guard may be assisted in the patrol and enforcement of the safety zone by local law enforcement and the MOTCO police as necessary. Upon being hailed by U.S. Coast Guard patrol personnel by siren, radio, flashing light, or other

means, the operator of a vessel must proceed as directed.

[USCG–2012–1008, 78 FR 5720, Jan. 28, 2013]

§ 165.1199 Security Zones; Military Ocean Terminal Concord (MOTCO), Concord, California.

(a) *Location*. The security zone(s) encompass the navigable waters of Suisun Bay, California, extending from the surface to the sea floor, within 500 yards of the three Military Ocean Terminal Concord (MOTCO) piers in Concord, California.

(b) *Regulations*. (1) The Captain of the Port (COTP) San Francisco Bay will enforce the security zone(s) established by this section during military onload or offload operations only upon notice. Upon notice of enforcement by the COTP, entering, transiting through or anchoring in the zone(s) is prohibited unless authorized by the COTP or his designated representative. Upon notice of suspension of enforcement by the COTP, all persons and vessels are granted general permissions to enter, transit, and exit the security zone(s).

(2) If more than 1 pier is involved in onload or offload operations at the same time, the 500-yard security zone for each involved pier will be enforced.

(3) Persons desiring to transit the area of a security zone may contact the Patrol Commander on scene on VHF-FM channel 13 or 16 or the COTP at telephone number 415–399–3547 to seek permission to transit the area. If permission is granted, all persons and vessels must comply with the instructions of the COTP or his designated representative.

(c) *Enforcement*. All persons and vessels must comply with the instructions of the Coast Guard Captain of the Port or the designated on-scene patrol personnel. Patrol personnel comprise commissioned, warrant, and petty officers of the Coast Guard onboard Coast Guard, Coast Guard Auxiliary, local, state, and federal law enforcement vessels. The U.S. Coast Guard may be assisted in the patrol and enforcement of the security zones by local law enforcement and the MOTCO police as necessary. Upon being hailed by U.S. Coast Guard patrol personnel by siren, radio, flashing light, or other means, the operator of a vessel must proceed as directed.

(d) *Notice of enforcement or suspension of enforcement of security zone(s)*. The COTP San Francisco Bay will cause notification of enforcement of the security zone(s) to be made by issuing a Local Notice to Mariners and a Broadcast Notice to Mariners to inform the affected segments of the public. During periods that the security zone(s) are being enforced, Coast Guard patrol personnel will notify mariners to keep out of the security zone(s) as they approach the area. In addition, Coast Guard Sector San Francisco Bay maintains a telephone line that is maintained 24 hours a day, 7 days a week. The public can contact Sector San Francisco Bay at (415) 399–3530 to obtain information concerning enforcement of this rule. When the security zone(s) are no longer needed, the COTP will cease enforcement of the security zone(s) and issue a Broadcast Notice to Mariners to notify the public. Upon notice of suspension of enforcement, all persons and vessels are granted general permissions to enter, move within and exit the security zone(s).

[COTP San Francisco Bay 04–007, 70 FR 3301, Jan. 24, 2005]

TWELFTH COAST GUARD DISTRICT

§ 165.1201 Safety Zone; Old Mormon Slough, Stockton California.

(a) *General*. This safety zone is established to protect environmental rehabilitation efforts and prevent vessels from disturbing the sediment cap at Old Mormon Slough.

(b) *Regulation*. All vessels and personnel not associated with the EPA are prohibited from entering into and transiting Old Mormon Slough. Old Mormon Slough is defined as all waters Eastward from the connection of coordinates 37°57′02.13″ North, 121°18′49.55″ West and 37°57′01.11″ North, 121°18′46.75″ West (NAD 83).

(c) Each person in a safety zone who has notice of a lawful order or direction shall obey the order or direction of the Captain of the Port (COTP) or District Commander issued to carry out the purposes of this subpart.

(d) The Coast Guard may be assisted in enforcing this rule by other Federal, state, or local agencies.

[USCG–2013–0196, 78 FR 60220, Oct. 1, 2013]

THIRTEENTH COAST GUARD DISTRICT

§ 165.T13–207 Safety Zones; Sellwood Bridge project, Willamette River; Portland, OR.

(a) *Location*. The safety zone on the western river bank encompasses all waters of the Willamette River within the following four points:

45–27′53.5″ N	122–40′03.5″ W
45–27′53.5″ N	122–39′58.5″ W
45–27′49.5″ N	122–39′58.5″ W
45–27′49.5″ N	122–40′04.5″ W

(b) The safety zone on the eastern river bank encompasses all waters of the Willamette River within the following four points:

45–27′53.5″ N	122–39′50.5″ W
45–27′53.5″ N	122–39′55.0″ W
45–27′49.5″ N	122–39′55.0″ W
45–27′49.5″ N	122–39′47.0″ W

(c) *Regulations*. In accordance with the general regulations in 33 CFR Part 165, subpart C, no person may enter or remain in the safety zones created in this section or bring, cause to be brought, or allow to remain in the safety zones created in this section any vehicle, vessel, or object unless authorized by the Captain of the Port Columbia River or his designated representative. The Captain of the Port Columbia River may be assisted by other federal, state, or local agencies with the enforcement of the safety zones.

(d) *Enforcement period*. The safety zones created by this section will be in effect from 11 a.m. on July 1, 2012 through 11:00 p.m. on January 31, 2015.

EFFECTIVE DATE NOTE: By USCG–2012–0131, 77 FR 38725, June 29, 2012, temporary § 165.T13–207 was added, effective from July 1, 2012 until Jan. 31, 2015.

§ 165.T13–209 Safety Zones; TriMet Bridge Project, Willamette River; Portland, OR.

(a) *Location*. The following are safety zones: All waters within 100 feet of work trestles, in all directions, and within 140 feet, in all directions, of the TriMet bridge construction cranes.

(b) *Regulation*. In accordance with the general regulations in 33 CFR Part 165, Subpart C, no vessel operator may enter or remain in the safety zones without the permission of the Captain of the Port or Designated Representative. The Captain of the Port may be assisted by other Federal, state, or local agencies with the enforcement of the safety zones.

(c) *Authorization*. All vessel operators who desire to enter the safety zones must obtain permission from the Captain of the Port or Designated Representative by contacting the on-scene patrol craft. Vessel operators granted permission to enter the zones will be escorted by the on-scene patrol craft until they are outside of the safety zones.

(d) *Enforcement period*. The safety zones detailed in paragraph (a) of this section will be enforced from 12:01 a.m. on July 1, 2011 through 11:59 p.m. on October 30, 2014.

EFFECTIVE DATE NOTE: By USCG–2011–1173, 77 FR 25082, Apr. 27, 2012, temporary § 165.T13–209 was added, effective from Apr. 27, 2012 until Oct. 31, 2014.

§ 165.T13–239 Safety Zone; Grain-Shipment Vessels and Grain-Shipment Assist Vessels, Columbia and Willamette Rivers.

(a) *Definitions*. As used in this section:

(1) *Federal Law Enforcement Officer* means any employee or agent of the United States government who has the authority to carry firearms and make warrantless arrests and whose duties involve the enforcement of criminal laws of the United States.

(2) *Navigable waters of the United States* means those waters defined as such in 33 CFR part 2.

(3) *Navigation Rules* means the International Regulations for Preventing Collisions at Sea, 1972 (commonly called 72 COLREGS) and the Inland Navigation Rules published in 33 CFR part 83.

(4) *Official Patrol* means those persons designated by the Captain of the Port to monitor a vessel safety zone, permit entry into the zone, give legally enforceable orders to persons or vessels within the zone and take other actions authorized by the Captain of the Port.

Federal Law Enforcement Officers authorized to enforce this section are designated as the Official Patrol.

(5) *Public vessel* means vessels owned, chartered, or operated by the United States, or by a State or political subdivision thereof.

(6) *Grain-shipment vessel* means any vessel bound for or departing or having previously loaded cargo at any of the following waterfront facilities: Columbia Grain in Portland, OR, United Grain Corporation in Vancouver, WA, Temco Irving in Portland, OR, Temco Kalama in Kalama, WA, or Louis Dreyfus Commodities in Portland, OR. This includes any vessel leaving anchor in the Columbia and Willamette Rivers that is bound for or had previously departed from the aforementioned waterfront facilities.

(7) *Grain-shipment assist vessel* means any vessel bound for or departing from a grain-shipment vessel to assist it in navigation during the movement of the grain-shipment vessel in the Columbia and Willamette Rivers and their tributaries. This includes but is not limited to tugs, pilot boats, and launches.

(8) *Oregon Law Enforcement Officer* means any Oregon Peace Officer as defined in Oregon Revised Statutes section 161.015.

(9) *Washington Law Enforcement Officer* means any General Authority Washington Peace Officer, Limited Authority Washington Peace Officer, or Specially Commissioned Washington Peace Officer as defined in Revised Code of Washington section 10.93.020.

(b) *Location*. The following areas are safety zones: All navigable waters of the United States within the Sector Columbia River Captain of the Port Zone, extending from the surface to the sea floor, that are:

(1) Not more than 500 yards ahead of grain-shipment vessels and 200 yards abeam and astern of grain-shipment vessels underway on the Columbia and Willamette Rivers and their tributaries.

(2) Not more than 100 yards ahead of grain-shipment assist vessels and 50 yards abeam and astern of grain-shipment assist vessels underway on the Columbia and Willamette Rivers and their tributaries.

(3) Within a maximum 200-yard radius of grain-shipment vessels when anchored, at any berth, moored, or in the process of mooring on the Columbia and Willamette Rivers.

(c) *Effective Period*. This section is effective as to persons with actual notice starting August 30, 2013. This rule is effective starting on its publication in the FEDERAL REGISTER September 18, 2013 for purposes of 5 U.S.C. 552. This rule will be in effect until September 18, 2015 and will be activated for enforcement as described in paragraph (d) of this section.

(d) *Notice of Enforcement*. (1) The Sector Columbia River Captain of the Port will cause notice of the enforcement of the grain-shipment and grain-shipment assist vessels safety zone to be made by all appropriate means to effect the widest publicity among the affected segments of the public as practicable, in accordance with 33 CFR 165.7. This notification of enforcement will identify the grain-shipment vessel by name and IMO number and the grain-shipment assist vessels by name. Such means of notification may include, but are not limited to, Broadcast Notices to Mariners or Local Notices to Mariners. The Sector Columbia River Captain of the Port will issue a Broadcast Notice to Mariners or Local Notice to Mariners notifying the public when enforcement of the safety zone is suspended.

(2) Upon notice of enforcement by the Sector Columbia River Captain of the Port, the Coast Guard will enforce the safety zone in accordance with rules set out in this section. Upon notice of suspension of enforcement by the Sector Columbia River Captain of the Port, all persons and vessels are authorized to enter, transit, and exit the safety zone, consistent with the Navigation Rules.

(e) *Regulation*. (1) In accordance with the general regulations in §165.23 of this part, entry into or movement within these zones is prohibited unless authorized by the Sector Columbia River Captain of the Port, the official patrol, or other designated representatives of the Captain of the Port.

(2) To request authorization to enter or operate within the safety zone contact the on-scene official patrol on

VHF–FM channel 16 or 13, or the Sector Columbia River Command Center at phone number (503) 861–6211. Authorization will be granted based on the necessity of access and consistent with safe navigation.

(3) Vessels authorized to enter or operate within the safety zone shall operate at the minimum speed necessary to maintain a safe course and shall proceed as directed by the on-scene official patrol. The Navigation Rules shall apply at all times within the safety zone.

(4) Maneuver-restricted vessels. When conditions permit, the on-scene official patrol, or a designated representative of the Captain of the Port at the Sector Columbia River Command Center, should:

(i) Permit vessels constrained by their navigational draft or restricted in their ability to maneuver to enter or operate within the safety zone in order to ensure a safe passage in accordance with the Navigation Rules; and

(ii) Permit commercial vessels anchored in a designated anchorage area to remain at anchor within the safety zone; and

(iii) Permit vessels that must transit via a navigable channel or waterway to enter or operate within the safety zone in order to do so.

(f) *Exemption*. Public vessels as defined in paragraph (a) of this section are exempt from complying with paragraph (e) of this section.

(g) *Enforcement*. Any Coast Guard commissioned, warrant, or petty officer may enforce the rules in this section. In the navigable waters of the United States to which this section applies, when immediate action is required and representatives of the Coast Guard are not present or are not present in sufficient force to provide effective enforcement of this section, any Federal Law Enforcement Officer, Oregon Law Enforcement Officer, or Washington Law Enforcement Officer may enforce the rules contained in this section pursuant to 46 U.S.C. 70118. In addition, the Captain of the Port may be assisted by other federal, state, or local agencies in enforcing this section.

(h) *Waiver*. The Captain of the Port Columbia River may waive any of the requirements of this section for any vessel or class of vessels upon finding that operational conditions or other circumstances are such that application of this section is unnecessary or impractical for the purpose of port safety or environmental safety.

EFFECTIVE DATE NOTE: By USCG–2013–0010, 78 FR 57263, Sept. 18, 2013, temporary § 165.T13–239 was revised, effective from Sept. 18, 2013, until Sept. 18, 2015.

§ 165.T13–240 Safety Zones; Pacific Northwest Grain Handlers Association Facilities; Columbia and Willamette Rivers.

(a) *Definitions*. As used in this section:

(1) *Federal Law Enforcement Officer* means any employee or agent of the United States government who has the authority to carry firearms and make warrantless arrests and whose duties involve the enforcement of criminal laws of the United States.

(2) *Navigable waters of the United States* means those waters defined as such in 33 CFR part 2.

(3) *Navigation Rules* means the International Regulations for Preventing Collisions at Sea, 1972 (commonly called 72 COLREGS) and the Inland Navigation Rules published in 33 CFR Part 83.

(4) *Official Patrol* means those persons designated by the Captain of the Port to monitor a vessel safety zone, permit entry into the zone, give legally enforceable orders to persons or vessels within the zone and take other actions authorized by the Captain of the Port. Federal Law Enforcement Officers authorized to enforce this section are designated as the Official Patrol.

(5) *Public vessel* means vessels owned, chartered, or operated by the United States, or by a State or political subdivision thereof.

(6) *Grain-shipment vessel* means any vessel bound for, departing from, or having previously loaded cargo at any of the following waterfront facilities: Columbia Grain in Portland, OR, United Grain Corporation in Vancouver, WA, Temco Irving in Portland, OR, Temco Kalama in Kalama, WA, or Louis Dreyfus Commodities in Portland, OR. This includes any vessel leaving anchor in the Columbia and Willamette Rivers that is bound for or had

previously departed from the aforementioned waterfront facilities.

(7) *Grain-shipment assist vessel* means any vessel bound for or departing from a grain-shipment vessel to assist it in navigation during the movement of the grain-shipment vessel in the Columbia and Willamette Rivers and their tributaries. This includes but is not limited to tugs, pilot boats, and launches.

(8) *Oregon Law Enforcement Officer* means any Oregon Peace Officer as defined in Oregon Revised Statutes section 161.015.

(9) *Washington Law Enforcement Officer* means any General Authority Washington Peace Officer, Limited Authority Washington Peace Officer, or Specially Commissioned Washington Peace Officer as defined in Revised Code of Washington section 10.93.020

(b) *Locations*. The following areas are safety zones:

(1) *Columbia Grain*. All navigable waters of the United States within the Sector Columbia River Captain of the Port Zone enclosed by three lines and the shoreline: line one starting on the shoreline at 45–38′34″ N/122–46′11″ W then heading 150 yards offshore to 45–38′37″ N/122–46′16″ W then heading up river 380 yards to 45–38′30″ N/122–46′28″ W then heading 150 yards to the shoreline ending at 45–38′27″ N/122–46′24″ W.

(2) *United Grain Corporation*. All navigable waters of the United States within the Sector Columbia River Captain of the Port Zone enclosed by three lines and the shoreline: line one starting on the shoreline at 45–37′52″ N/122–41′46″ W then heading 150 yards offshore to 45–37′48″ N/122–41′50″ W then heading up river 470 yards to 45–37′40″ N/122–41′34″ W then heading 175 yards to the shoreline ending at 45–37′44″ N/122–41′29″ W.

(3) *Temco Portland*. All navigable waters of the United States within the Sector Columbia River Captain of the Port Zone enclosed by three lines and the shoreline: line one starting on the shoreline at 45–32′10″ N/122–40′34″ W then heading 150 yards offshore to 45–32′09″ N/122–40′39″ W then heading up river 275 yards to 45–32′01″ N/122–40′33″ W then heading 150 yards to the shoreline ending at 45–32′04″ N/122–40′28″ W.

(4) *Temco Kalama*. All navigable waters of the United States within the Sector Columbia River Captain of the Port Zone enclosed by three lines and the shoreline: line one starting on the shoreline at 45–59′10″ N/122–50′09″ W then heading 150 yards offshore to 45–59′09″ N/122–50′14″ W then heading up river 385 yards to 45–58′58″ N/122–50′07″ W then heading 150 yards to the shoreline ending at 45–59′00″ N/122–50′01″ W.

(5) *Louis Dreyfus Commodities*. All navigable waters of the United States within the Sector Columbia River Captain of the Port Zone enclosed by three lines and the shoreline: line one starting on the shoreline at 45–31′49″ N/122–40′15″ W then heading 70 yards offshore to 45–31′48″ N/122–40′17″ W then heading up river 300 yards to 45–31′41″ N/122–40′09″ W then heading 100 yards to the shoreline ending at 45–31′43″ N/122–40′06″ W.

(c) *Effective period*. This section is effective without actual notice from November 27, 2013 until November 27, 2015 and will be activated for enforcement as described in paragraph (d) of this section. Actual notice will be used from the date the rule was signed, October 31, 2013, until November 27, 2013.

(d) *Enforcement periods*. The Sector Columbia River Captain of the Port will cause notice of the enforcement of the grain facilities safety zones to be made by all appropriate means to effect the widest publicity among the affected segments of the public as practicable, in accordance with 33 CFR 165.7. Such means of notification may include, but are not limited to, Broadcast Notices to Mariners or Local Notices to Mariners. The Sector Columbia River Captain of the Port will issue a Broadcast Notice to Mariners notifying the public when enforcement of the safety zone is suspended. Upon notice of enforcement by the Sector Columbia River Captain of the Port, the Coast Guard will enforce the safety zone in accordance with the rules set out in this section. Upon notice of suspension of enforcement by the Sector Columbia River Captain of the Port, all persons and vessels are authorized to enter, transit, and exit the safety zone, consistent with the Navigation Rules.

(e) *Regulation*. (1) In accordance with the general regulations in section 165.23 of this part, entry into or movement within these zones is prohibited

unless authorized by the Sector Columbia River Captain of the Port, the official patrol, or other designated representatives of the Captain of the Port.

(2) To request authorization to enter or operate within the safety zone contact the on-scene official patrol on VHF–FM channel 16 or 13, or the Sector Columbia River Command Center at phone number (503) 861–6211. Authorization will be granted based on the necessity of access and consistent with safe navigation.

(3) Vessels authorized to enter or operate within the safety zone shall operate at the minimum speed necessary to maintain a safe course and shall proceed as directed by the on-scene official patrol. The Navigation Rules shall apply at all times within the safety zone.

(4) When conditions permit, the on-scene official patrol, or a designated representative of the Captain of the Port at the Sector Columbia River Command Center, should:

(i) Permit vessels constrained by their navigational draft or restricted in their ability to maneuver to enter or operate within the safety zone in order to ensure a safe passage in accordance with the Navigation Rules; and

(ii) Permit commercial vessels anchored in a designated anchorage area to remain at anchor within the safety zone; and

(iii) Permit vessels that must transit via a navigable channel or waterway to enter or operate within the safety zone in order to do so.

(f) *Exemption*. Public vessels as defined in paragraph (a) of this section are exempt from complying with paragraph (e) of this section.

(g) *Enforcement*. Any Coast Guard commissioned, warrant, or petty officer may enforce the rules in this section. In the navigable waters of the United States to which this section applies, when immediate action is required and representatives of the Coast Guard are not present or are not present in sufficient force to provide effective enforcement of this section, any Federal Law Enforcement Officer, Oregon Law Enforcement Officer, or Washington Law Enforcement Officer may enforce the rules contained in this section pursuant to 46 U.S.C. 70118. In addition, the Captain of the Port may be assisted by other federal, state, or local agencies in enforcing this section.

(h) *Waiver*. The Captain of the Port Columbia River may waive any of the requirements of this section for any vessel or class of vessels upon finding that operational conditions or other circumstances are such that application of this section is unnecessary or impractical for the purpose of port safety or environmental safety.

EFFECTIVE DATE NOTE: By USCG–2013–0011, 78 FR 70861, Nov. 27, 2013, temporary § 165.T13–240 was added, effective from Nov. 27, 2013 until Nov. 27, 2015.

§ 165.1301 Puget Sound and Adjacent Waters in Northwestern Washington—Regulated Navigation Area.

The following is a regulated navigation area—All of the following northwestern Washington waters under the jurisdiction of the Captain of the Port, Puget Sound: Puget Sound, Hood Canal, Possession Sound, Elliott Bay, Commencement Bay, the San Juan Archipelago, Rosario Strait, Guemes Channel, Bellingham Bay, U.S. waters of the Strait of the Strait of Juan de Fuca, Haro Strait, Boundary Pass, and Georgia Strait, and all lesser bays and harbors adjacent to the above.

(a) Definitions as used in this section:

(1) *Vessels engaged in fishing* are as identified in the definition found in Rule 3 of the International Regulations for Prevention of Collisions at Sea, 1972, (72 COLREGS), found in appendix A, part 81 of this chapter.

(2) *Hazardous levels of vessel traffic congestion* are as defined at the time by Puget Sound Vessel Traffic Service.

(b) Nothing in this section shall be construed as relieving any party from their responsibility to comply with applicable rules set forth in the 72 COLREGS.

(c) General Regulations: The provisions of this paragraph apply at all times.

(1) Vessels engaged in fishing or other operations—that are distinct from vessels following a TSS or a connecting precautionary area east of New Dungeness and which are not required by the Bridge to Bridge Radiotelephone Regulations to maintain a listening

watch, are highly encouraged to maintain a listening watch on the Puget Sound Vessel Traffic Service (PSVTS) VHF-FM radio frequency for the area in which the vessel is operating. A safe alternative to the radio listening watch is to stay clear of the TSS and connecting precautionary area.

(2) Vessels engaged in gill net fishing at any time between sunset and sunrise in any of the waters defining the regulated navigation are of this section shall, in addition to the navigation lights and shapes required by Part 81 of this title (72 COLREGS), display at the end of the net most distant from the vessel on all-round (32-point) white light visible for a minimum of two nautical miles and displayed from at least three feet above the surface of the water.

(3) Vessels engaged in fishing, including gillnet and purse seine fishing, are prohibited in the following Prohibited Fishing Area: The Hood Canal Bridge, to include the waters within a one-half nautical mile radius of the center of the main ship channel draw span during the immediate approach and transit of the draw by public vessels of the United States.

(4) East of New Dungeness, vessels engaged in fishing in a traffic lane or connecting precautionary area shall tend nets or other gear placed in the water so as to facilitate the movement of the vessel or gear from the traffic lane or precautionary area upon the approach of a vessel following the TSS.

(d) Congested Regulations: The provisions under this paragraph apply only when imposed in specific locations by Puget Sound Vessel Traffic Service. They are intended to enhance vessel traffic safety during periods and in locations where hazardous levels of vessel traffic congestion are deemed to exist by Puget Sound Vessel Traffic Service. Operations potentially creating vessel traffic congestion include, but are not limited to, vessels engaged in fishing, including gillnet or purse seine, recreational fishing derbies, regattas, or permitted marine events.

(1) Vessels engaged in fishing or other operations—that are distinct from vessels following a Traffic Separation Scheme (TSS) or a connecting precautionary area east of New Dungeness, may not remain in, nor their gear remain in, a traffic lane or a connecting precautionary area east of New Dungeness when a vessel following a TSS approaches. Such vessels not following a TSS or a connecting precautionary area shall draw in their gear, maneuver, or otherwise clear these areas so that their action is complete at least fifteen minutes before the arrival of a vessel following the TSS. Vessels which are required by this paragraph to remain clear of a connecting precautionary area east of New Dungeness or a traffic lane must also remain clear of the adjacent separation zone when in a TSS east of New Dungeness.

(2) A vessel following the TSS may not exceed a speed of 11 knots through the water.

(3) Vessels engaged in fishing, including gillnet and purse seine fishing, are prohibited in the following Prohibited Fishing Area: Edmonds/Kingston ferry crossing lanes, to include the waters within one-quarter nautical mile on either side of a straight line connecting the Edmonds and Kingston ferry landings during the hours that the ferry is operating.

(e) Authorization to deviate from this section.

(1) Commander, Thirteenth Coast Guard District may, upon written request, issue an authorization to deviate from this section if the proposed deviation provides a level of safety equivalent to or beyond that provided by the required procedure. An application for authorization must state the need for the deviation and describe the proposed alternative operation.

(2) PSVTS may, upon verbal request, authorize a deviation from this section for a voyage, or part of a voyage, if the proposed deviation provides a level of safety equivalent to or beyond that provided by the required procedure. The deviation request must be made well in advance to allow the requesting vessel and the Vessel Traffic Center (VTC) sufficient time to assess the safety of the proposed deviation. Discussions between the requesting vessel and the VTC should include, but are not limited to, information on vessel

handling characteristics, traffic density, radar contracts, and environmental conditions.

(3) In an emergency, the master, pilot, or person directing the movement of the vessel following the TSS may deviate from this section to the extent necessary to avoid endangering persons, property, or the environment, and shall report the deviation to the VTC as soon as possible.

[CGD 13–98–002, 63 FR 7708, Feb. 17, 1998]

§ 165.1302 Bangor Naval Submarine Base, Bangor, WA.

(a) *Location*. The following is a security zone: The waters of the Hood Canal encompassed by a line commencing on the east shore of Hood Canal at latitude 47°43′17″ N., longitude 122°44′44″ W., thence to latitude 47°43′32″ N., longitude 122°44′40″ W.; thence to latitude 47°43′50″ N., longitude 122°44′40″ W.; thence to latitude 47°44′24″ N., longitude 122°44′22″ W.; thence to latitude 47°45′47″ N., longitude 122°43′22″ W.; thence to latitude 47°46′23″ N., longitude 122°42′42″ W.; thence to latitude 47°46′23″ N., longitude 122°42′20″ W.; thence to latitude 47°46′20″ N., longitude 122°42′12″ W.: thence southerly along the shoreline to the point of beginning.

(b) *Security zone anchorage*. The following is a security zone anchorage: Area No. 2. Waters of Hood Canal within a circle of 1,000 yards diameter centered on a point located at latitude 47°46′26″ N., longitude 122°42′49″ W.

(c) *Special Regulations*. (1) Section 165.33 paragraphs, (a), (e), and (f) do not apply to the following vessels or individuals on board those vessels:

(i) Public vessels of the United States, other than United States Naval vessels.

(ii) Vessels that are performing work at Naval Submarine Base Bangor pursuant to a contract with the United States Navy which requires their presence in the security zone.

(iii) Any other vessels or class of vessels mutually agreed upon in advance by the Captain of the Port and Commanding Officer, Naval Submarine Base Bangor. Vessels operating in the security zone under this exemption must have previously obtained a copy of a certificate of exemption permitting their operation in the security zone from the Security Office, Naval Submarine Base Bangor. This written exemption shall state the date(s) on which it is effective and may contain any further restrictions on vessel operations within the security zone as have been previously agreed upon by the Captain of the Port and Commanding Officer, Naval Submarine Base Bangor. The certificate of exemption shall be maintained on board the exempted vessel so long as such vessel is operating in the security zone.

(2) Any vessel authorized to enter or remain in the security zone may anchor in the security zone anchorage.

(3) Other vessels desiring access to this zone shall secure permission from the Captain of the Port through the Security Office of the Naval Submarine Base Bangor. The request shall be forwarded in a timely manner to the Captain of the Port by the appropriate Navy official.

(d) *Enforcement*. The U.S. Coast Guard may be assisted in the patrol and monitoring of this security zone by the U.S. Navy.

[CDG13 87–06, 52 FR 47924, Dec. 17, 1987]

§ 165.1303 Puget Sound and adjacent waters, WA—regulated navigation area.

(a) The following is a regulated navigation area: the waters of the United States east of a line extending from Discovery Island Light to New Dungeness Light and all points in the Puget Sound area north and south of these lights.

(b) *Regulations*. (1) Tank vessel navigation restrictions: Tank vessels larger than 125,000 deadweight tons bound for a port or place in the United States may not operate in the regulated navigation area.

(2) Commander, Thirteenth Coast Guard District may, upon written request, issue an authorization to deviate from paragraph (b)(1) of this section if it is determined that such deviation provides an adequate level of safety. Any application for authorization must state the need and fully describe the proposed procedure.

(c) *Precautionary Area Regulations*. (1) A vessel in a precautionary area which

is depicted on National Oceanic and Atmospheric Administration (NOAA) nautical charts, except precautionary ''RB'' (a circular area of 2,500 yards radius centered at 48–26′24″ N., 122–45′12″ W.), must keep the center of the precautionary area to port.

NOTE: The center of precautionary area ''RB'' is not marked by a buoy.

(2) The Puget Sound Vessel Traffic Service (PSVTS) may, upon verbal request, authorize a onetime deviation from paragraph (c)(1) of this section for a voyage, or part of a voyage, if the proposed deviation provides a level of safety equivalent to or beyond that provided by the required procedure. The deviation request must be made well in advance to allow the requesting vessel and the Vessel Traffic Center (VTC) sufficient time to assess the safety of the proposed deviation. Discussions between the requesting vessel and the VTC should include, but are not limited to, information on the vessel handling characteristics, traffic density, radar contacts, and environmental conditions.

(3) In an emergency, the master, pilot, or person directing the movement of the vessel may deviate from paragraph (c)(1) of this section to the extent necessary to avoid endangering persons, property, or the environment, and shall report the deviation to the VTC as soon as possible.

[CGD 90–020, 59 FR 36335, July 15, 1994, as amended by CGD 13–97–003, 62 FR 23660, May 1, 1997]

§ 165.1305 Commencement Bay, Tacoma, WA.

(a) *Location*. The following area is a safety zone for the Tacoma Freedom Fair Air Show: All portions of Commencement Bay bounded by the following coordinates: Latitude 47°17′38″ N, Longitude 122°28′43 W; thence south easterly to Latitude 47°17′4″ N, Longitude 122°27′32″ W; thence south westerly to Latitude 47°16′35″ N, Longitude 122°28′1″ W; thence north westerly along the shoreline to Latitude 47°17′10″ N, Longitude 122°29′14″ W; thence returning to the origin. This safety zone resembles a rectangle protruding from the shoreline along Ruston Way. Floating markers will be placed by the sponsor of the event to delineate the boundaries of the safety zone.

(b) *Effective dates*. This section is effective annually on July the fourth from 2 p.m. to 12:30 a.m. July the fifth unless otherwise specified by FEDERAL REGISTER notice.

(c) *Regulation*. In accordance with the general regulations in § 165.23 of this part, entry into this safety zone is prohibited unless authorized by the Captain of the Port, Puget Sound, Seattle, WA.

[CGD13–95–009, 60 FR 61481, Nov. 30, 1995, as amended by USCG–2011–0197, 76 FR 31855, June 2, 2011]

§ 165.1307 Elliott Bay, Seattle, WA.

(a) *Location*. The following area is a safety zone: All portions of Elliott Bay bounded by the following coordinates: Latitude 47°37′22″ N, Longitude 122°22′06″ W; thence to Latitude 47°37′06″ N, Longitude 122°21′45″ W; thence to Latitude 47°36′54″ N, Longitude 122°22′05″ W; thence to Latitude 47°37′08″ N, Longitude 122°22′27″ W; thence returning to the origin. This safety zone resembles a square centered around the barge from which the fireworks will be launched and begins 100 yards from the shoreline of Myrtle Edwards Park. Floating markers will be placed by the sponsor of the fireworks display to delineate the boundaries of the safety zone [Datum NAD 1983].

(b) *Effective dates*. This section is effective annually on July fourth from 9:30 p.m. to 11 p.m. unless otherwise specified by FEDERAL REGISTER notice.

(c) *Regulation*. In accordance with the general regulations in § 165.23 of this part, entry into this safety zone is prohibited unless authorized by the Captain of the Port, puget sound, Seattle, WA.

[CGD13–95–007, 60 FR 61482, Nov. 30, 1995, as amended by CGD13–97–015, 62 FR 39445, July 23, 1997]

§ 165.1308 Columbia River, Vancouver, WA.

(a) *Location*. The following area is a safety zone: All waters of the Columbia River at Vancouver, Washington, bounded by a line commencing at the northern base of the Interstate 5 highway bridge at latitude 45°37′17″ N, longitude 122°40′22″ W; thence south along

the Interstate 5 highway bridge to latitude 45°37′03″ N, longitude 122°40′32″ W; thence to latitude 45°36′28″ N, longitude 122°38′35″ W; thence to Ryan's Point at latitude 45°36′42″ N, longitude 122°38′35″ W; thence along the Washington shoreline to the point of origin. [Datum: NAD 83].

(b) *Effective dates*. This section is effective annually on July fourth from 9 p.m. to 11 p.m. (PDT) unless otherwise specified by FEDERAL REGISTER notice.

(c) *Regulation*. In accordance with the general regulations in § 165.23 of this part, entry into this safety zone is prohibited unless authorized by the Captain of the Port Columbia River.

[CGD13–95–055, 61 FR 18949, Apr. 30, 1996, as amended by USCG–2010–0351, 75 FR 48565, Aug. 11, 2010]

§ 165.1309 Eagle Harbor, Bainbridge Island, WA.

(a) *Regulated area*. A regulated navigation area is established on that portion of Eagle Harbor bounded by a line beginning at: 47°36′56″ N, 122°30′36″ W; thence to 47°37′11″ N, 122°30′36″ W; thence to 47°37′25″ N, 122°30′17″ W; thence to 47°37′24″ N, 122°30′02″ W; thence to 47°37′16″ N, 122°29′55″ W; thence to 47°37′03″ N, 122°30′027sec; W; thence returning along the shoreline to point of origin. [Datum NAD 1983].

(b) *Regulations*. All vessels and persons are prohibited from anchoring, dredging, laying cable, dragging, seining, bottom fishing, conducting salvage operations, or any other activity which could potentially disturb the seabed in the designated area. Vessels may otherwise transit or navigate within this area without reservation.

(c) *Waiver*. The Captain of the Port, Puget Sound, upon advice from the U.S. EPA Project Manager and the Washington State Department of Natural Resources, may, upon written request, authorize a waiver from this section if it is determined that the proposed operation supports USEPA remedial objectives, or can be performed in a manner that ensures the integrity of the sediment cap. A written request must describe the intended operation, state the need, and describe the proposed precautionary measures. Requests should be submitted in triplicate, to facilitate review by U.S. EPA, Coast Guard, and Washington State Agencies. USEPA managed remedial design, remedial action, habitat mitigation, or monitoring activities associated with the Wyckoff/Eagle Harbor Superfund Site are excluded from the waiver requirement. USEPA is required, however, to alert the Coast Guard in advance concerning any of the above-mentioned activities that may, or will, take place in the Regulated Area.

[CGD 13–98–004, 64 FR 72561, Dec. 28, 1999]

§ 165.1310 Strait of Juan de Fuca and adjacent coastal waters of Northwest Washington; Makah Whale Hunting—Regulated Navigation Area.

(a) The following area is a Regulated Navigation Area (RNA): From 48°02.25′ N, 124°42.1′ W northward along the mainland shoreline of Washington State to Cape Flattery and thence eastward along the mainland shoreline of Washington State to 48°22′ N, 124°34′ W; thence due north to 48°24.55′ N, 124°34′ W; thence northwesterly to 48°27.1′ N, 124°41.7′ W; thence due west to 48°27.1′ N, 124°45.5′ W; thence southwesterly to 48°20.55′ N, 124°51.05′ W, thence west south west to 48°18.0′ N 124°59.0′ W, thence due south to 48°02.25′ N, 124°59.0′ W) thence due east back to the shoreline of Washington at 48°02.25′ N, 124°42.1′ W. Datum: NAD 1983.

(b) During a whale hunt, while the international numeral pennant five (5) is flown by a Makah whale hunt vessel, the following area within the RNA is a Moving Exclusion Zone: The column of water from the surface to the seabed with a radius of 500 yards centered on the Makah whale hunt vessel displaying international numeral pennant five (5). This Moving Exclusionary Zone is activated only when surface visibility exceeds one nautical mile, between sunrise and sunset, and the Makah whale hunt vessel displays the international numeral pennant five (5). The Moving Exclusionary Zone is deactivated upon sunset, visibility is reduced to less than one nautical mile, or when the Makah hunt vessel strikes international numeral pennant five (5).

(c) Unless otherwise authorized by the Commander, Thirteenth Coast

Guard District or his or her representative, no person or vessel may enter the active Moving Exclusionary Zone except for:

(1) Authorized Makah whale hunt vessel actively engaged in hunting operations under direction of the master of the Makah vessel flying international numeral pennant five (5), and

(2) A single authorized media pool vessel operating in accordance with paragraph (f) of this section.

(d) The international numeral pennant five (5) is only authorized to be displayed from one Makah whale hunt vessel during actual whale hunt operations. No other vessels may display this pennant within the RNA at any time. Whale hunt operations commence when a whale hunt vessel is underway and its master intends to have a whale killed during the voyage. Whale hunt operations cease once this intent is abandoned, a whale is landed, or when the international numeral pennant five (5) is struck.

(e) The Makah Tribe shall make SECURITE broadcasts beginning one half hour before the commencement of a hunt and every half hour thereafter until hunting activities are concluded. This broadcast shall be made on channel 16 VHF-FM and state:

A whale hunt is proceeding today within the Regulated Navigation Area established for Makah whaling activities. The (name of vessel) is a (color and description of vessel) and will be flying international numeral pennant five (5) while engaged in whaling operations. This pennant is yellow and blue in color. Mariners are required by federal regulation to stay 500 yards away from (name of vessel), and are strongly urged to remain even further away from whale hunt activities as an additional safety measure.

(f)(1) Credentialed members of the media interested in entering the Moving Exclusionary Zone may request permission to operate a single media vessel in the Moving Exclusionary Zone by telephoning Coast Guard Public Affairs, as soon as practicable at (206) 220–7237 during normal working hours, and (206) 220–7001 after hours. Coast Guard preauthorization is required prior to entry into the Moving Exclusionary Zone by a single media pool vessel.

(2) The media pool vessel must be a U.S. documented vessel. The media pool vessel must be under command at all times within the Moving Exclusionary zone by a master holding a license or merchant mariner credential issued in the U.S. to carry passenger for hire. All expenses, liabilities and risks associated with operation of the media pool vessel lie with members of the pool and the pool vessel owners and operators.

(3) The master of the media pool vessel shall maneuver to avoid positioning the pool vessel between whales and hunt vessel(s), out of the line of fire, at a prudent distance and location relative to whale hunt operations, and in a manner that avoids hindering the hunt or path of the whale in any way.

(4) Although permitted to maneuver within the Moving Exclusionary Zone, personnel aboard the media pool vessel are still required to follow safety and law enforcement related instructions of Coast Guard personnel.

[CGD 13–98–023, 63 FR 52609, Oct. 1, 1998, as amended by CGD 13–98–023, 64 FR 61212, Nov. 10, 1999; USCG–2006–24371, 74 FR 11213, Mar. 16, 2009]

§ 165.1311 Olympic View Resource Area, Tacoma, WA.

(a) *Regulated area*. A regulated navigation area is established on that portion of Commencement Bay bounded by a line beginning at: 47°15′40.19753″ N, 122°26′09.27617″ W; thence to 47°15′42.21070″ N, 122°26′10.65290″ W; thence to 47°15′41.84696″ N, 122°26′11.80062″ W; thence to 47°15′45.57725″ N, 122°26′14.35173″ W; thence to 47°15′53.06020″ N, 122°26′06.61366″ W; thence to 47°15′46.74493″ N, 122°26′02.50574″ W; thence returning along the shoreline to the point of origin. [Datum NAD 1983].

(b) *Regulations*. All vessels and persons are prohibited from anchoring, dredging, laying cable, dragging, seining, bottom fishing, conducting salvage operations, or any other activity which could potentially disturb the seabed in the designated area. Vessels may otherwise transit or navigate within this area without reservation.

(c) *Waiver*. The Captain of the Port, Puget Sound, upon advice from the United States Environmental Protection Agency (USEPA) Project Manager and the Washington State Department

of Natural Resources, may, upon written request, authorize a waiver from this section if it is determined that the proposed operation supports USEPA remedial objectives, or can be performed in a manner that ensures the integrity of the sediment cap. A written request must describe the intended operation, state the need, and describe the proposed precautionary measures. Requests shall be submitted in triplicate, to facilitate review by USEPA, Coast Guard, and Washington State Agencies. USEPA managed remedial design, remedial action, habitat mitigation, or monitoring activities associated with the Olympic View Resource Area Superfund Site are excluded from the waiver requirement. USEPA is required, however, to alert the Coast Guard in advance concerning any of the above-mentioned activities that may, or will, take place in the Regulated Area.

[CGD13–02–016, 68 FR 17735, Apr. 11, 2003]

§ 165.1312 Security Zone; Portland Rose Festival on Willamette River.

(a) *Location*. The following area is a security zone: All waters of the Willamette River, from surface to bottom, encompassed by the Hawthorne and Steel Bridges.

(b) *Regulations*. In accordance with § 165.33, entry into this zone is prohibited unless authorized by the Captain of the Port Columbia River or his designated representatives. Section 165.33 also contains other general requirements.

(c) *Authority*. In addition to 33 U.S.C. 1231, the authority for this section includes 33 U.S.C. 1226.

(d) *Enforcement period*. This section is enforced annually in June from the first Wednesday in June falling on the 4th or later through the following Monday in June. The event will be 6 days in length and the specific dates of enforcement will be published each year in the FEDERAL REGISTER. In 2005, the zone will be enforced on Wednesday, June 8, through Monday, June 13.

[CGD13–02–020, 68 FR 31979, May 29, 2003, as amended by CDG13–05–007, 70 FR 33353, June 8, 2005; USCG–2010–0351, 75 FR 50884, Aug. 18, 2010]

§ 165.1313 Security zone regulations, tank ship protection, Puget Sound and adjacent waters, Washington

(a) *Notice of enforcement or suspension of enforcement*. The tank ship security zone established by this section will be enforced only upon notice by the Captain of the Port Puget Sound. Captain of the Port Puget Sound will cause notice of the enforcement of the tank ship security zone to be made by all appropriate means to effect the widest publicity among the affected segments of the public including publication in the FEDERAL REGISTER as practicable, in accordance with 33 CFR 165.7(a). Such means of notification may also include but are not limited to, Broadcast Notice to Mariners or Local Notice to Mariners. The Captain of the Port Puget Sound will issue a Broadcast Notice to Mariners and Local Notice to Mariners notifying the public when enforcement of the tank ship security zone is suspended.

(b) The following definitions apply to this section:

(1) *Federal Law Enforcement Officer* means any employee or agent of the United States government who has the authority to carry firearms and make warrantless arrests and whose duties involve the enforcement of criminal laws of the United States.

(2) *Navigable waters of the United States* means those waters defined as such in 33 CFR part 2.

(3) *Navigation Rules* means the Navigation Rules, International-Inland.

(4) *Official patrol* means those persons designated by the Captain of the Port to monitor a tank ship security zone, permit entry into the zone, give legally enforceable orders to persons or vessels with in the zone and take other actions authorized by the Captain of the Port. Persons authorized in paragraph (k) to enforce this section are designated as the official patrol.

(5) *Public vessel* means vessels owned, chartered, or operated by the United States, or by a State or political subdivision thereof.

(6) *Tank ship security zone* is a regulated area of water, established by this section, surrounding tank ships for a 500-yard radius that is necessary to provide for the security of these vessels.

(7) *Tank ship* means a self-propelled tank vessel that is constructed or adapted primarily to carry oil or hazardous material in bulk as cargo or cargo residue in the cargo spaces. The definition of tank ship does not include tank barges.

(8) *Washington Law Enforcement Officer* means any General Authority Washington Peace Officer, Limited Authority Washington Peace Officer, or Specially Commissioned Washington Peace Officer as defined in Revised Code of Washington section 10.93.020.

(c) *Security zone:* There is established a tank ship security zone extending for a 500-yard radius around all tank ships located in the navigable waters of the United States in Puget Sound, WA, east of 123 degrees, 30 minutes West Longitude. [Datum: NAD 1983]

(d) *Compliance:* The tank ship security zone established by this section remains in effect around tank ships at all times, whether the tank ship is underway, anchored, or moored. Upon notice of enforcement by the Captain of the Port Puget Sound, the Coast Guard will enforce the tank ship security zone in accordance with rules set out in this section. Upon notice of suspension of enforcement by the Captain of the Port Puget Sound, all persons and vessels are authorized to enter, transit, and exit the tank ship security zone, consistent with the Navigation Rules.

(e) The Navigation Rules shall apply at all times within a tank ship security zone.

(f) When within a tank ship security zone all vessels shall operate at the minimum speed necessary to maintain a safe course and shall proceed as directed by the on-scene official patrol or tank ship master. No vessel or person is allowed within 100 yards of a tank ship, unless authorized by the on-scene official patrol or tank ship master.

(g) To request authorization to operate within 100 yards of a tank ship, contact the on-scene official patrol or tank ship master on VHF-FM channel 16 or 13.

(h) When conditions permit, the on-scene official patrol or tank ship master should:

(1) Permit vessels constrained by their navigational draft or restricted in their ability to maneuver to pass within 100 yards of a tank ship in order to ensure a safe passage in accordance with the Navigation Rules;

(2) Permit commercial vessels anchored in a designated anchorage area to remain at anchor when within 100 yards of a passing tank ship; and

(3) Permit vessels that must transit via a navigable channel or waterway to pass within 100 yards of a moored or anchored tank ship with minimal delay consistent with security.

(i) *Exemption*. Public vessels as defined in paragraph (b) of this section are exempt from complying with paragraphs (c), (d), (f), (g), (h), (j), and (k) of this section.

(j) *Exception*. 33 CFR Part 161 promulgates Vessel Traffic Service regulations. Measures or directions issued by Vessel Traffic Service Puget Sound pursuant to 33 CFR Part 161 shall take precedence over the regulations in this section.

(k) *Enforcement*. Any Coast Guard commissioned, warrant or petty officer may enforce the rules in this section. In the navigable waters of the United States to which this section applies, when immediate action is required and representatives of the Coast Guard are not present or not present in sufficient force to provide effective enforcement of this section in the vicinity of a tank ship, any Federal Law Enforcement Officer or Washington Law Enforcement Officer may enforce the rules contained in this section pursuant to 33 CFR § 6.04–11. In addition, the Captain of the Port may be assisted by other federal, state or local agencies in enforcing this section.

[CGD13–02–018, 68 FR 15374, Mar. 31, 2003]

§ 165.1314 Safety Zone; Fort Vancouver Fireworks Display, Columbia River, Vancouver, Washington.

(a) *Location*. The following area is a safety zone: All waters of the Columbia River at Vancouver, Washington bounded by a line commencing at the northern base of the Interstate 5 highway bridge at latitude 45°37″ 16.5′ N, longitude 122°40″ 22.5′’ W; thence south along the Interstate 5 highway bridge to Hayden Island, Oregon at latitude 45°36″ 51.5′ N, longitude 122°40″ 39′ W; thence east along Hayden Island to latitude 45°36″ 36′ N, longitude 122°39″

48′ W (not to include Hayden Bay); thence north across the river thru the preferred channel buoy, RG Fl(2+1)R 6s, to the Washington shoreline at latitude 45°37″ 1.5′ N, longitude 122°39″ 29′ W; thence west along the Washington shoreline to the point of origin.

(b) *Regulations.* In accordance with the general regulations in § 165.23 of this part, no person or vessel may enter or remain in this zone unless authorized by the Captain or the Port or his designated representatives.

(c) *Authority.* In addition to 33 U.S.C. 1231, the authority for this section includes 33 U.S.C. 1226.

(d) *Enforcement period.* This section will be enforced every July 4, from 9:30 p.m. (P.D.T.) to 11 p.m. (P.D.T.).

[CGD13–03–001, 68 FR 31610, May 28, 2003]

§ 165.1315 Safety Zones: Fireworks displays in the Captain of the Port Columbia River Zone.

(a) *Safety zones.* The following areas are designated safety zones:

(1) *Cinco de Mayo Fireworks Display, Portland, OR:*

(i) *Location.* Waters on the Willamette River bounded by the Morrison Bridge to the north, Hawthorne Bridge to the south, and the shoreline to the east and west.

(ii) *Enforcement period.* One day in early May.

(2) *Portland Rose Festival Fireworks Display, Portland, OR:*

(i) *Location.* Waters on the Willamette River bounded by the Morrison Bridge to the north, Hawthorne Bridge to the south, and the shoreline to the east and west.

(ii) *Enforcement period.* One day in late May or early June.

(3) *Tri-City Chamber of Commerce Fireworks Display, Columbia Park, Kennewick, WA:*

(i) *Location.* Waters on the Columbia River bounded by shoreline to the north and south, Interstate 395 bridge to the east, and 1000 feet of water to the west of the launching barge which is centered at 46 degrees 13 minutes 38 seconds North, 119 degrees 08 minutes 52 seconds West.

(ii) *Enforcement date.* Every July 4th.

(4) *Cedco Inc. Fireworks Display, North Bend, OR*

(i) *Location.* Waters on the Coos River bounded by shoreline to the east and west and 1000 feet of water to the north and south of the launching barge which is centered at 43 degrees 23 minutes 45 seconds North, 124 degrees 12 minutes 50 seconds West.

(ii) *Enforcement period.* One day in early July.

(5) *Astoria 4th of July Fireworks, Astoria, OR*

(i) *Location.* All waters of the Columbia River at Astoria, Oregon enclosed by the following points: North from the Oregon shoreline at 123 degrees 50 minutes 1 second West to 46 degrees 11 minutes 50 seconds North, thence east to 123 degrees 49 minutes 15 seconds West, thence south to the Oregon shoreline and finally westerly along the Oregon shoreline to the point of origin.

(ii) *Enforcement period.* One day in early July.

(6) *Oregon Food Bank Blues Festival Fireworks, Portland, OR*

(i) *Location.* Waters on the Willamette River bounded by the Hawthorne Bridge to the north, Marquam Bridge to the south, and shoreline to the east and west.

(ii) *Enforcement period.* One day in early July.

(7) *Oregon Symphony Concert Fireworks Display, Portland, OR*

(i) *Location.* All waters of the Willamette River bounded by the Hawthorne Bridge to the north, Marquam Bridge to the south, and shoreline to the east and west.

(ii) *Enforcement period.* One day between the third week of August and the third week of September.

(8) *Florence Chamber 4th of July Fireworks Display, Florence, OR*

(i) *Location.* All water of the Siuslaw River enclosed by the following points: 43°58′05″ N, 124°05′54″ W following the shoreline to 43°58′20″ N 124°04′46″ W then south to 43°58′07″ N 124°04′40″ W following the shoreline to 43°57′48″ N 124°05′54″ W then back to the point of origin.

(ii) *Enforcement period.* This section is enforced annually on July fourth from 9 p.m. to 11 p.m. (PDT).

(9) *Oaks Park July 4th Celebration, Portland, OR*

(i) *Location.* All water of the Willamette River enclosed by the following

points: 45°28′26″ N 22°39′43″ W following the shoreline to 45°28′10″ N 122°39′54″ W then west to 45°28′41″ N 122°40′06″ W following the shoreline to 45°28′31″ N 122°40′01″ W then back to the point of origin.

(ii) *Enforcement period*. This section is enforced annually on July fourth from 9 p.m. to 11 p.m. (PDT).

(10) *Rainier Days Fireworks Celebration, Rainier, OR*

(i) *Location*. All water of the Columbia River enclosed by the following points: 46°06′04″ N, 122°56′35″ W following the shoreline to 46°05′53″ N 122°55′58″ W then south to 46°05′24″ N 122°55′58″ W following the shoreline to 46°05′38″ N 122°56′35″ W then back to the point of origin.

(ii) *Enforcement period*. This section is enforced annually on the second Saturday of July each year from 9 p.m. to 11 p.m. (PDT). Except that when the first Saturday falls on July 1, this section will be enforced on the third Saturday of July.

(11) *Ilwaco July 4th Committee Fireworks, Ilwaco, WA*

(i) *Location*. All water of the Columbia River extending out to a 700′ radius from the launch site at 46°18′17″ N 124°01′55″ W.

(ii) *Enforcement period*. This section is enforced annually on the first Saturday of July from 9 p.m. to 11 p.m. (PDT).

(12) *Milwaukie Centennial Fireworks Display, Milwaukie, OR*

(i) *Location*. All water of the Willamette River enclosed by the following points: 45°26′41″ N, 122°38′46″ W following the shoreline to 45°26′17″ N 122°38′36″ W then west to 45°26′17″ N 122°38′55″ W following the shoreline to 45°26′36″ N 122°38′50″ W then back to the point of origin.

(ii) *Enforcement period*. This section is enforced annually on the third Saturday of July each year from 9 p.m. to 11 p.m. (PDT). Except that when the first Saturday falls on July 1, this section will be enforced on the fourth Saturday of July.

(13) *Splash Aberdeen Waterfront Festival, Aberdeen, WA*

(i) *Location*. All water of the Chehalis River extending out to 500 feet of the following points: 46°58′40″ N, 123°47′45″ W.

(ii) *Enforcement period*. This section is enforced annually on July fourth from 9 p.m. to 11 p.m. (PDT).

(14) *City of Coos Bay July 4th Celebration, Coos Bay, OR*

(i) *Location*. All water of the Coos River extending out to 1200 feet of the following points: 43°22′12″ N, 124°12′39″ W.

(ii) *Enforcement period*. This section is enforced annually on July fourth from 9 p.m. to 11 p.m. (PDT).

(15) *Arlington Chamber of Commerce Fireworks Display, Arlington, OR:*

(i) *Location*. All waters of the Columbia River encompassed by lines connecting the following points in the vicinity of Arlington, Oregon: from the southern shore of the Columbia River at 45°43′23″ N 120°12′11″ W, thence to 45°43′29″ N 120°12′12″ W, thence to 45°43′31″ N 120°12′06″ W, thence to the southern shore of the Columbia River at 45°43′26″ N 120°12′12″ W.

(ii) *Enforcement period*. This safety zone is in effect from approximately 8:30 p.m. to approximately 11:30 p.m. for one day during the last week of June or the first week of July each year.

(16) *East County 4th of July Fireworks, Gresham, OR:*

(i) *Location*. All waters of the Columbia River encompassed in a 500 foot radius around position 45°33′33″ N 122°27′03″ W.

(ii) *Enforcement period*. This safety zone is in effect from approximately 8:30 p.m. to approximately 11:30 p.m. for one day during the first week of July each year.

(17) *Port of Cascade Locks July 5th Fireworks Display, Cascade Locks, OR:*

(i) *Location*. All waters of the Columbia River encompassed in a 500 foot radius around position 45°40′16″ N 121°53′38″ W.

(ii) *Enforcement period*. This safety zone is in effect from approximately 8:30 p.m. to approximately 11:30 p.m. for one day during the first week of July each year.

(18) *Astoria Regatta Association Fireworks Display, Astoria, OR:*

(i) *Location*. All waters of the Columbia River encompassed by lines connecting the following points in the vicinity of Astoria, Oregon: from the southern shore of the Columbia River

at 46°22′34″ N 123°48′33″ W, thence to 46°11′52″ N 123°48′35″ W, thence to 46°11′52″ N 123°48′19″ W, thence to the southern shore of the Columbia River at 46°11′39″ N 123°48′13″ W.

(ii) *Enforcement period*. This safety zone is in effect from approximately 11:30 p.m. one day during the second weekend of August each year.

(19) *City of Washougal July 4th Fireworks Display, Washougal WA:*

(i) *Location*. All waters of the Columbia River encompassed by lines connecting the following points in the vicinity of Washougal, Washington: from the northern shore of the Columbia River at 45°33′50″ N 122°20′16″ W, thence to 45°33′42″ N 122°02′29″ W, thence to 45°33′53″ N 122°20′39″ W, thence to the northern shore of the Columbia River at 45°35′04″ N 122°20′53″ W.

(ii) *Enforcement period*. This safety zone is in effect from approximately 8:30 p.m. to approximately 11:30 p.m. one day during the first week of July each year.

(20) *City of St. Helens 4th of July Fireworks Display, St. Helens, OR:*

(i) *Location*. All waters of the Columbia River encompassed in a 1200 foot radius around position 45°51′51″ N 122°47′22″ W.

(ii) *Enforcement period*. This safety zone is in effect from approximately 8:30 p.m. to approximately 11:30 p.m. one day during the first week of July each year.

(21) *Waverly Country Club 4th of July Fireworks Display, Milwaukie, OR:*

(i) *Location*. All waters of the Willamette River encompassed by lines connecting the following points in the vicinity of Milwaukie, Oregon: from 45°27′10″ N 122°29′35″ W, thence to 45°27′12″ N 122°39′25″ W, thence to 45°26′56″ N 122°39′15″ W, thence to 45°26′52″ N 122°39′25″ W.

(ii) *Enforcement period*. This safety zone is in effect from approximately 8:30 p.m. to approximately 11:30 p.m. one day during the first week of July each year.

(22) *Booming Bay Fireworks, Westport, WA:*

(i) *Location*. All waters of Grays Harbor encompassed in a 600 foot radius around position 46°54′14″ N 124°06′08″ W.

(ii) *Enforcement period*. This safety zone is in effect from approximately 8:30 p.m. to approximately 11:30 p.m. one day during the last week of June or the first week of July each year.

(23) *Hood River 4th of July, Hood River, OR:*

(i) *Location*. All waters of the Columbia River encompassed in a 1000 foot radius around position 45°42′58″ N 121°30″31″ W.

(ii) *Enforcement period*. This safety zone is in effect from 8:30 p.m. to approximately 11:30 p.m. one day during the last week of June or the first week of July each year.

(24) *Rufus 4th of July Fireworks, Rufus, OR:*

(i) *Location*. All waters of the Columbia River encompassed in a 500 foot radius around position 45°41′30″ N 120°45′47″ W.

(ii) *Enforcement period*. This safety zone is in effect from approximately 8:30 p.m. to approximately 11:30 p.m. for one day during the last week of June or the first week of July each year.

(b) *Regulations*. In accordance with § 165.23 of this part, no person may enter or remain in these safety zones unless authorized by the Captain of the Port Columbia River or his/her designated representative. Also in accordance with § 165.23 of this part, no person may bring into, cause to be brought into, or allow to remain in these safety zones any vehicle, vessel, or object unless authorized by the Captain of the Port Columbia River or his/her designated representative.

(c) *Notice*. In accordance with § 165.7 of this part, notification of the specific period of enforcement for each of these safety zones may be made by marine broadcast, local notice to mariners, local news media, distribution in leaflet form, on-scene oral notices, and/or publication in the FEDERAL REGISTER.

[CGD01–03–008, 68 FR 32368, May 30, 2003, as amended by CGD13–06–009, 71 FR 30805, May 31, 2006; USCG–2008–1096, 74 FR 68161, Dec. 23, 2009; USCG–2010–0351, 75 FR 48565, Aug. 11, 2010; USCG–2010–0997, 76 FR 18395, Apr. 4, 2011]

§ 165.1316 Safety Zone; Columbia River, Astoria, Oregon.

(a) *Location*. The following area is a safety zone: All waters of the Columbia River at Astoria, Oregon enclosed by

the following points: North from the Oregon shoreline at 123°49′36″ West to 46°11′51″ North thence east to 123°48′53″ West thence south to the Oregon shoreline and finally westerly along the Oregon shoreline to the point of origin.

(b) *Regulations*. In accordance with the general regulations in § 165.23 of this part, no person or vessel may enter or remain in this zone unless authorized by the Captain or the Port or his designated representatives.

(c) *Authority*. In addition to 33 U.S.C. 1231, the authority for this section includes 33 U.S.C. 1226.

(d) *Enforcement period*. This section will normally be enforced on the second Saturday of August from 9:30 p.m. (PDT) to 10:30 p.m. (PDT). Announcement of enforcement periods may be made by the methods described in 33 CFR 165.7, or any other reasonable method.

[CGD13–03–013, 68 FR 42290, July 17, 2003]

§ 165.1317 Security and Safety Zone; Large Passenger Vessel Protection, Puget Sound and adjacent waters, Washington.

(a) *Notice of enforcement or suspension of enforcement*. The large passenger vessel security and safety zone established by this section will be enforced only upon notice by the Captain of the Port Puget Sound. Captain of the Port Puget Sound will cause notice of the enforcement of the large passenger vessel security and safety zone to be made by all appropriate means to effect the widest publicity among the affected segments of the public including publication in the FEDERAL REGISTER as practicable, in accordance with 33 CFR 165.7(a). Such means of notification may also include but are not limited to, Broadcast Notice to Mariners or Local Notice to Mariners. The Captain of the Port Puget Sound will issue a Broadcast Notice to Mariners and Local Notice to Mariners notifying the public when enforcement of the large passenger vessel security and safety zone is suspended.

(b) *Definitions*. The following definitions apply to this section:

Federal Law Enforcement Officer means any employee or agent of the United States government who has the authority to carry firearms and make warrantless arrests and whose duties involve the enforcement of criminal laws of the United States.

Large Passenger Vessel means any cruise ship over 100 feet in length carrying passengers for hire, and any auto ferries and passenger ferries over 100 feet in length carrying passengers for hire such as the Washington State Ferries, M/V COHO and Alaskan Marine Highway Ferries. Large Passenger Vessel does not include vessels inspected and certificated under 46 CFR, Chapter I, Subchapter T such as excursion vessels, sight seeing vessels, dinner cruise vessels, and whale watching vessels.

Large Passenger Vessel Security and Safety Zone is a regulated area of water established by this section, surrounding large passenger vessels for a 500-yard radius to provide for the security and safety of these vessels.

Navigable waters of the United States means those waters defined as such in 33 CFR part 2.

Navigation Rules means the Navigation Rules, International—Inland.

Official Patrol means those persons designated by the Captain of the Port to monitor a large passenger vessel security and safety zone, permit entry into the zone, give legally enforceable orders to persons or vessels within the zone and take other actions authorized by the Captain of the Port. Persons authorized in paragraph (l) to enforce this section are designated as the Official Patrol.

Public vessel means vessels owned, chartered, or operated by the United States, or by a State or political subdivision thereof.

Washington Law Enforcement Officer means any General Authority Washington Peace Officer, Limited Authority Washington Peace Officer, or Specially Commissioned Washington Peace Officer as defined in Revised Code of Washington section 10.93.020.

(c) *Security and safety zone*. There is established a large passenger vessel security and safety zone extending for a 500-yard radius around all large passenger vessels located in the navigable waters of the United States in Puget Sound, WA, east of 123°30′ West Longitude. [Datum: NAD 1983].

(d) *Compliance*. The large passenger vessel security and safety zone established by this section remains in effect around large passenger vessels at all times, whether the large passenger vessel is underway, anchored, or moored. Upon notice of enforcement by the Captain of the Port Puget Sound, the Coast Guard will enforce the large passenger vessel security and safety zone in accordance with rules set out in this section. Upon notice of suspension of enforcement by the Captain of the Port Puget Sound, all persons and vessels are authorized to enter, transit, and exit the large passenger vessel security and safety zone, consistent with the Navigation Rules.

(e) The Navigation Rules shall apply at all times within a large passenger vessel security and safety zone.

(f) When within a large passenger vessel security and safety zone all vessels must operate at the minimum speed necessary to maintain a safe course and must proceed as directed by the on-scene official patrol or large passenger vessel master. No vessel or person is allowed within 100 yards of a large passenger vessel that is underway or at anchor, unless authorized by the on-scene official patrol or large passenger vessel master. No vessel or person is allowed within 25 yards of a large passenger vessel that is moored.

(g) To request authorization to operate within 100 yards of a large passenger vessel that is underway or at anchor, contact the on-scene official patrol or large passenger vessel master on VHF-FM channel 16 or 13.

(h) When conditions permit, the on-scene official patrol or large passenger vessel master should:

(1) Permit vessels constrained by their navigational draft or restricted in their ability to maneuver to pass within 100 yards of a large passenger vessel in order to ensure a safe passage in accordance with the Navigation Rules; and

(2) Permit vessels that must transit via a navigable channel or waterway to pass within 100 yards of an anchored large passenger vessel or within 25 yards of a moored large passenger vessel with minimal delay consistent with security.

(i) When a large passenger vessel approaches within 100 yards of any vessel that is moored or anchored, the stationary vessel must stay moored or anchored while it remains within the large passenger vessel's security and safety zone unless it is either ordered by, or given permission by the Captain of the Port Puget Sound, his designated representative or the on-scene official patrol to do otherwise.

(j) *Exemption*. Public vessels as defined in paragraph (b) of this section are exempt from complying with paragraphs (c), (d), (f), (g), (h), and (i), of this section.

(k) *Exception*. 33 CFR part 161 contains Vessel Traffic Service regulations. When measures or directions issued by Vessel Traffic Service Puget Sound pursuant to 33 CFR part 161 also apply, the measures or directions govern rather than the regulations in this section.

(l) *Enforcement*. Any Coast Guard commissioned, warrant or petty officer may enforce the rules in this section. In the navigable waters of the United States to which this section applies, when immediate action is required and representatives of the Coast Guard are not present or not present in sufficient force to provide effective enforcement of this section in the vicinity of a large passenger vessel, any Federal Law Enforcement Officer or Washington Law Enforcement Officer may enforce the rules contained in this section pursuant to 33 CFR 6.04–11. In addition, the Captain of the Port may be assisted by other federal, state or local agencies in enforcing this section.

(m) *Waiver*. The Captain of the Port Puget Sound may waive any of the requirements of this section for any vessel or class of vessels upon finding that a vessel or class of vessels, operational conditions or other circumstances are such that application of this section is unnecessary or impractical for the purpose of port security, safety or environmental safety.

[CGD13–03–018, 69 FR 2068, Jan. 14, 2004; 69 FR 4245, Jan. 29, 2004]

§ 165.1318 Security and Safety Zone Regulations, Large Passenger Vessel Protection, Captain of the Port Columbia River Zone.

(a) *Notice of enforcement or suspension of enforcement.* The large passenger vessel security and safety zone established by this section will be enforced only upon notice by the Captain of the Port Columbia River. Captain of the Port Columbia River will cause notice of the enforcement of the large passenger vessel security and safety zone to be made by all appropriate means to effect the widest publicity among the affected segments of the public including publication in the FEDERAL REGISTER as practicable, in accordance with 33 CFR 165.7(a). Such means of notification may also include but are not limited to, Broadcast Notice to Mariners or Local Notice to Mariners. The Captain of the Port Columbia River will issue a Broadcast Notice to Mariners and Local Notice to Mariners notifying the public when enforcement of the large passenger vessel security and safety zone is suspended.

(b) *Definitions.* As used in this section—

Federal Law Enforcement Officer means any employee or agent of the United States government who has the authority to carry firearms and make warrantless arrests and whose duties involve the enforcement of criminal laws of the United States.

Large passenger vessel means any vessel over 100 feet in length (33 meters) carrying passengers for hire including, but not limited to, cruise ships, auto ferries, passenger ferries, and excursion vessels.

Large passenger vessel security and safety zone is a regulated area of water, established by this section, surrounding large passenger vessels for a 500 yard radius that is necessary to provide for the security and safety of these vessels.

Navigable waters of the United States means those waters defined as such in 33 CFR part 2.

Navigation Rules means the Navigation Rules, International-Inland.

Official Patrol means those persons designated by the Captain of the Port to monitor a large passenger vessel security and safety zone, permit entry into the zone, give legally enforceable orders to persons or vessels with in the zone and take other actions authorized by the Captain of the Port. Persons authorized as Federal Law Enforcement Officers to enforce this section are designated as the Official Patrol.

Oregon Law Enforcement Officer means any Oregon Peace Officer as defined in Oregon Revised Statutes section 161.015.

Public vessel means vessels owned, chartered, or operated by the United States, or by a State or political subdivision thereof.

Washington Law Enforcement Officer means any General Authority Washington Peace Officer, Limited Authority Washington Peace Officer, or Specially Commissioned Washington Peace Officer as defined in Revised Code of Washington section 10.93.020.

(c) *Security and safety zone.* There is established a large passenger vessel security and safety zone extending for a 500 yard radius around all large passenger vessels in the navigable waters of the United States, in Portland, OR at the Columbia River Bar ''C'' buoy and extending eastward on the Columbia River to Kennewick, WA and upriver through Lewiston, ID on the Snake River.

(d) *Compliance.* The large passenger vessel security and safety zone established by this section remains in effect around large passenger vessels at all times, whether the large passenger vessel is underway, anchored, or moored. Upon notice of enforcement by the Captain of the Port Columbia River, the Coast Guard will enforce the large passenger vessel security and safety zone in accordance with rules set out in this section. Upon notice of suspension of enforcement by the Captain of the Port Columbia River, all persons and vessels are authorized to enter, transit, and exit the large passenger vessel security and safety zone, consistent with the Navigation Rules.

(e) *Navigation Rules.* The Navigation Rules shall apply at all times within a large passenger vessel security and safety zone.

(f) *Restrictions based on distance from large passenger vessel.* When within a large passenger vessel security and safety zone, all vessels shall operate at

the minimum speed necessary to maintain a safe course and shall proceed as directed by the on-scene official patrol or large passenger vessel master. No vessel or person is allowed within 100 yards of a large passenger vessel that is underway or at anchor, unless authorized by the on-scene official patrol or large passenger vessel master.

(g) *Requesting authorization to operate within 100 yards of large passenger vessel.* To request authorization to operate within 100 yards of a large passenger vessel that is underway or at anchor, contact the on-scene official patrol or large passenger vessel master on VHF-FM channel 16 or 13.

(h) *Maneuver-restricted vessels.* When conditions permit, the on-scene official patrol or large passenger vessel master should:

(1) Permit vessels constrained by their navigational draft or restricted in their ability to maneuver to pass within 100 yards of a large passenger vessel in order to ensure a safe passage in accordance with the Navigation Rules; and

(2) Permit commercial vessels anchored in a designated anchorage area to remain at anchor within 100 yards of a passing large passenger vessel; and

(3) Permit vessels that must transit via a navigable channel or waterway to pass within 100 yards of an anchored large passenger vessel.

(i) *Stationary vessels.* When a large passenger vessel approaches within 100 yards of any vessel that is moored or anchored, the stationary vessel must stay moored or anchored while it remains with in the large passenger vessel's security and safety zone unless it is either ordered by, or given permission by the Captain of the Port Columbia River, his designated representative or the on-scene official patrol to do otherwise.

(j) *Exemption.* Public vessels as defined in paragraph (b) of this section are exempt from complying with paragraphs (c), (d), (f), (g), (h), and (i), of this section.

(k) *Enforcement.* Any Coast Guard commissioned, warrant or petty officer may enforce the rules in this section. In the navigable waters of the United States to which this section applies, when immediate action is required and representatives of the Coast Guard are not present or not present in sufficient force to provide effective enforcement of this section in the vicinity of a large passenger vessel, any Federal Law Enforcement Officer, Oregon Law Enforcement Officer or Washington Law Enforcement Officer may enforce the rules contained in this section pursuant to 33 CFR 6.04–11. In addition, the Captain of the Port may be assisted by other federal, state or local agencies in enforcing this section.

(l) *Waiver.* The Captain of the Port Columbia River may waive any of the requirements of this section for any vessel or class of vessels upon finding that a vessel or class of vessels, operational conditions or other circumstances are such that application of this section is unnecessary or impractical for the purpose of port security, safety or environmental safety.

[CGD13–03–022, 68 FR 53679, Sept. 12, 2003, as amended by USCG–2010–0351, 75 FR 48565, Aug. 11, 2010]

§ 165.1319 Safety Zone Regulations, Seafair Blue Angels Air Show Performance, Seattle, WA.

(a) *Enforcement period.* This section will be enforced annually during the last week in July and the first two weeks of August from 8 a.m. until 4 p.m., each day during the event. The event will be one week or less in duration. The specific dates during this time frame will be published in the FEDERAL REGISTER.

(b) *Location.* The following is a safety zone: All waters of Lake Washington encompassed by the following points: 47°36′17.28″ N, 122°14′49.44″ W; thence west to point 47°36′17.28″ N, 122°16′58.56″ W; thence south along the shoreline to Andrews Bay at point 47°33′04.62″ N, 122°15′32.46″ W; thence northeast along the shoreline of Bailey Peninsula to its northeast point at 47°33′44.98″ N, 122°15′03.48″ W; thence easterly to point 47°33′43.98″ N, 122°13′51.36″ W on Mercer Island; thence northerly along the shore of Mercer Island to point 47°35′45.12″ N, 122°14′49.44″ W; thence north back to the point of origin.

(c) *Regulations.* In accordance with the general regulations in 33 CFR Part 165, Subpart C, no person or vessel may enter or remain in the zone except for

support vessels and support personnel, vessels registered with the event organizer, or other vessels authorized by the Captain of the Port or his designated representatives. Vessels and persons granted authorization to enter the safety zone shall obey all lawful orders or directions of the Captain of the Port or his designated representatives.

[CGD13–04–002, 69 FR 35250, June 24, 2004, as amended by USCG–2012–0903, 78 FR 12600, Feb. 25, 2013]

§ 165.1321 Security Zone; Protection of Military Cargo, Captain of the Port Zone Puget Sound, WA.

(a) *Notice of enforcement or suspension of enforcement.* The Captain of the Port Puget Sound will enforce the security zones established by this section only upon notice. Captain of the Port Puget Sound will cause notice of the enforcement of these security zone to be made by all appropriate means to effect the widest publicity among the affected segments of the public including publication in the FEDERAL REGISTER as practicable, in accordance with 33 CFR 165.7(a). Such means of notification may also include but are not limited to, Broadcast Notice to Mariners or Local Notice to Mariners. The Captain of the Port Puget Sound will issue a Broadcast Notice to Mariners and Local Notice to Mariners notifying the public when enforcement of these security zones is suspended.

(b) *Definitions.* The following definitions apply to this section:

Designated Representative means those persons designated by the Captain of the Port to monitor these security zones, permit entry into these zones, give legally enforceable orders to persons or vessels with in these zones and take other actions authorized by the Captain of the Port. Persons authorized in paragraph (g) to enforce this section and Vessel Traffic Service Puget Sound (VTS) are Designated Representatives.

Federal Law Enforcement Officer means any employee or agent of the United States government who has the authority to carry firearms and make warrantless arrests and whose duties involve the enforcement of criminal laws of the United States.

Navigable waters of the United States means those waters defined as such in 33 CFR Part 2.

Public vessel means vessels owned, chartered, or operated by the United States, or by a State or political subdivision thereof.

Washington Law Enforcement Officer means any General Authority Washington Peace Officer, Limited Authority Washington Peace Officer, or Specially Commissioned Washington Peace Officer as defined in Revised Code of Washington section 10.93.020.

(c) *Security zone.* The following areas are security zones:

(1) *Blair Waterway Security Zone:* The Security Zone in the Blair Waterway, Commencement Bay, WA, includes all waters enclosed by a line connecting the following points: 47°16′57″ N, 122°24′39″ W, which is approximately the beginning of Pier No. 23 (also known as the Army pier); then northwesterly to 47°17′05″ N, 122°24′52″ W, which is the end of the Pier No. 23 (Army pier); then southwesterly to 47°16′42″ N, 122°25′ 18″ W, which is the approximate location of a private buoy on the end of the sewage outfall; then southeasterly to 47°16′33″ N, 122°25′04″ W, which is approximately the northwestern end of Pier No. 5; then northeasterly to the northwestern end of Pier No. 1; then southeasterly along the shoreline of the Blair Waterway to the Blair Waterway turning basin; then along the shoreline around the Blair Waterway turning basin; then northwesterly along the shoreline of the Blair Waterway to the Commencement Bay Directional Light (light list number 17159); then northeasterly along the shoreline to the point of origin. [Datum: NAD 1983].

(2) *Sitcum Waterway Security Zone:* The Security Zone in the Sitcum Waterway, Commencement Bay, WA, includes all waters enclosed by a line connecting the following points: 47°16′33″ N, 122°25′04″ W, which is approximately the northwestern end of Pier No. 5; then northwesterly to 47°16′42″ N, 122°25′18″ W, which is the approximate location of a private buoy on the end of the sewage outfall; then southwesterly to 47°16′23″ N, 122°25′36″ W; then southeasterly to 47°16′10″ N, 122°25′27″ W, which is the northwestern

corner of Pier No. 2; then extending northeasterly to 47°16′13″ N, 122°25′13″ W; then extending southeasterly along the shoreline of the Sitcum Waterway; then northeasterly along the shoreline at the terminus of the Sitcum Waterway and then northwesterly along the shoreline of the Sitcum Waterway; then northeasterly along the shoreline of Pier No. 5 to the point of origin. [Datum: NAD 1983].

(3) *Budd Inlet Security Zone:* The Security Zone in Budd Inlet, West Bay, Olympia WA includes all waters enclosed by a line connecting the following points: 47°03′12″ N, 122°54′21″ W, which is approximately the northwestern end of the fence line enclosing Berth 1 at Port of Olympia; then northerly to 47°03′15″ N, 122°54′21″ W, which is the approximate 300 feet north along the shoreline; then westerly to 47°03′15″ N, 122°54′26″ W; then southerly to 47°03′06″ N, 122°54′26″ W; then southeasterly to 47°03′03″ N, 122°54′20″ W, which is approximately the end of the T-shaped pier; then north to 47°03′04″ N, 122°54′19.5″ W, which is approximately the southwestern corner of berth 1; then northerly along the shoreline to the point of origin. [Datum: NAD 1983].

(d) *Obtaining permission to enter, move within, or exit the security zones.* All vessels must obtain permission from the COTP or a Designated Representative to enter, move within, or exit the security zones established in this section when these security zones are enforced. Vessels 20 meters or greater in length should seek permission from the COTP or a Designated Representative at least 4 hours in advance. Vessels less than 20 meters in length should seek permission at least 1 hour in advance. VTS Puget Sound may be reached on VHF channel 14.

(e) *Compliance.* Upon notice of enforcement by the Captain of the Port Puget Sound, the Coast Guard will enforce these security zones in accordance with rules set out in this section. Upon notice of suspension of enforcement by the Captain of the Port Puget Sound, all persons and vessels are authorized to enter, transit, and exit these security zones.

(f) *Regulations.* Under the general regulations in 33 CFR part 165 subpart D, this section applies to any vessel or person in the navigable waters of the United States to which this section applies. No person or vessel may enter the security zones established in this section unless authorized by the Captain of the Port or his designated representatives. Vessels and persons granted permission to enter the security zone shall obey all lawful orders or directions of the Captain of the Port or his designated representatives. All vessels shall operate at the minimum speed necessary to maintain a safe course.

(g) *Enforcement.* Any Coast Guard commissioned, warrant or petty officer may enforce the rules in this section. In the navigable waters of the United States to which this section applies, when immediate action is required and representatives of the Coast Guard are not present or not present in sufficient force to provide effective enforcement of this section, any Federal Law Enforcement Officer or Washington Law Enforcement Officer may enforce the rules contained in this section pursuant to 33 CFR 6.04–11. In addition, the Captain of the Port may be assisted by other federal, state or local agencies in enforcing this section pursuant to 33 CFR 6.04–11.

(h) *Exemption.* Public vessels as defined in paragraph (b) of this section are exempt from the requirements in this section.

(i) *Waiver.* For any vessel, the Captain of the Port Puget Sound may waive any of the requirements of this section, upon finding that operational conditions or other circumstances are such that application of this section is unnecessary or impractical for the purpose of port security, safety or environmental safety.

[CGD13–04–019, 69 FR 52603, Aug. 27, 2004, as amended by CGD13–04–040, 69 FR 71711, Dec. 10, 2004; CGD13–04–46, 70 FR 2019, Jan. 12, 2005; CGD13–05–031, 70 FR 45537, Aug. 8, 2005]

§ 165.1322 Regulated Navigation Area: Willamette River Portland, Captain of the Port Columbia River Zone.

(a) *Location.* The following is a regulated navigation area (RNA): All waters of the Willamette River encompassed by a line commencing at 45°34′.47″ N, 122°45′28″ W along the shoreline to 45°34′47″ N, 122°45′30″ W thence to

45°34′47″ N, 122°45′30″ W thence to 45°34′48″ N, 122°45′30″ W thence to 45°34′48″ N, 122°45′30″ W thence to 45°34′48″ N, 122°45′28″ W thence to 45°34′47″ N, 122°45′28″ W and back to the point of origin. All coordinates reference 1983 North American Datum (NAD 83).

(b) *Regulations.* (1) Motoring, anchoring, dragging, dredging, or trawling are prohibited in the regulated area.

(2) All vessels transiting or accessing the regulated area shall do so at a no wake speed or at the minimum speed necessary to maintain steerage.

[USCG–2008–0112, 74 FR 5988, Feb. 4, 2009]

§ 165.1323 Regulated Navigation Area: Willamette River Captain of the Port Columbia River Zone.

(a) *Location.* The following is a regulated navigation area (RNA): All waters of the Willamette River encompassed by a line commencing at 45°34′.33″ N, 122°44′17″ W to 45°34′32″ N, 122°44′18″ W thence to 45°34′35″ N, 122°44′24″ W thence to 45°34′35″ N, 122°44′27″ W thence to 45°34′35″ N, 122°44′36″ W thence to 45°34′35″ N, 122°44′37″ W thence to 45°34′38″ N, 122°44′42″ W to 45°34′39″ N, 122°44′43″ W thence to 45°34′44″ N, 122°44′51″ W thence to 45°34′45″ N, 122°44′53″ W thence to 45°34′47'' N, 122°44′51″ W thence to 45°34′45″ N, 122°44′46″ W to 45°34′45″ N, 122°44′45″ W thence to 45°34′47″ N, 122°44′43″ W thence to 45°34′46″ N, 122°44′42″ W thence to 45°34′48″ N, 122°44′40'' W thence to 45°34′48″ N, 122°44′38″ W and along the shoreline to 45°34′46″ N, 122°44′39″ W and back to the point of origin. All coordinates reference 1983 North American Datum (NAD 83).

(b) *Regulations.* (1) Anchoring, spudding, dredging, laying cable, dragging, trawling, conducting salvage operations, operating commercial vessels of any size, and operating recreational vessels greater than 30 feet in length are prohibited in the regulated area.

(2) All vessels transiting or accessing the regulated area shall do so at no wake speed or at the minimum speed necessary to maintain steerage.

[USCG–2008–0121, 74 FR 5991, Feb. 4, 2009]

§ 165.1324 Safety and Security Zone; Cruise Ship Protection, Elliott Bay and Pier-91, Seattle, Washington.

(a) *Safety and security zones.* (1) The following area is a safety and security zone: All waters within the following points: a rectangle, starting at 47°37′53″ N/122°23′07″ W, thence south to position 47°37′06″ N/122°23′07″ W, thence east to position 47°37′06″ N/122°22′43″ W, thence north to position 47°37′58″ N/122°22′43″ W. This zone will be enforced only during the arrival or departure of Large Passenger Cruise Vessels at Pier 91, Seattle, Washington.

(2) The following area is a safety and security zone: All waters within 100 yards of Pier 91, Seattle, Washington, at approximate position 47°37′35″ N/122°23′00″ W. This zone will be enforced only when a Large Passenger Cruise Vessel is moored at Pier 91.

(b) *Regulations.* In accordance with the general regulations in 33 CFR Part 165, Subpart D, no person or vessel may enter or remain in either Safety and Security Zone except for vessels authorized by the Captain of the Port or Designated Representatives.

(c) *Definitions.* The following definitions apply to this section:

Facility Security Officer means the person designated as responsible for the development, implementation, revision and maintenance of the facility security plan and for liaison with the COTP and Company and Vessel Security Officers.

Large Passenger Cruise Vessel means any cruise ship over 100 feet in length carrying passengers for hire. Large Passenger Cruise Vessel does not include vessels inspected and certificated under 46 CFR, Chapter I, Subchapter T such as excursion vessels, sight seeing vessels, dinner cruise vessels, and whale watching vessels.

Official Patrol means those persons designated by the Captain of the Port to monitor a Large Passenger Cruise Vessel security and safety zone, permit entry into the zone, give legally enforceable orders to persons or vessels within the zone and take other actions authorized by the Captain of the Port. Persons authorized in paragraph (e) to enforce this section are designated as the Official Patrol.

(d) *Authorization*. To request authorization to operate within 100 yards of a Large Passenger Cruise Vessel that is moored at Pier 91, contact the on-scene Official Patrol on VHF–FM channel 16 or 13 or the Facility Security Officer at (206) 728–3688.

(e) *Enforcement*. Any Coast Guard commissioned, warrant or petty officer may enforce the rules in this section. In the navigable waters of the United States to which this section applies, when immediate action is required and representatives of the Coast Guard are not present or not present in sufficient force to provide effective enforcement of this section in the vicinity of a Large Passenger Cruise Vessel, any Federal or Washington Law Enforcement Officer may enforce the rules contained in this section pursuant to 33 CFR 6.04–11. In addition, the Captain of the Port may be assisted by other Federal, state or local agencies in enforcing this section.

(f) *Waiver*. The Captain of the Port Puget Sound may waive any of the requirements of this section for any vessel or class of vessels upon finding that a vessel or class of vessels, operational conditions or other circumstances are such that application of this section is unnecessary or impractical for the purpose of port security, safety or environmental safety.

[USCG–2009–0331, 74 FR 42028, Aug. 20, 2009]

§ 165.1325 Regulated Navigation Areas; Bars Along the Coasts of Oregon and Washington.

(a) *Regulated navigation areas*. Each of the following areas is a regulated navigation area:

(1) Quillayute River Entrance, Wash.: From the west end of James Island 47°54′23′ N., 124°39′05′ W. southward to buoy No. 2 at 47°53′42′ N., 124°38′42′ W. eastward to the shoreline at 47°53′42′ N., 124°37′51′ W., thence northward along the shoreline to 47°54′29′ N., 124°38′20′ W. thence northward to 47°54′36′ N., 124°38′22′ W. thence westward to the beginning.

(2) Grays Harbor Entrance, Wash.: From a point on the shoreline at 46°59′00″ N., 124°10′10″ W. westward to 46°59′00″ N., 124°15′30″ W. thence southward to 46°51′00″ N., 124°15′30″ W. thence eastward to a point on the shoreline at 46°51′00″ N., 124°06′40″ W. thence northward along the shoreline to a point at the south jetty 46°54′20″ N., 124°08′07″ W. thence eastward to 46°54′10″ N., 124°05′00″ W. thence northward to 46°55′00″ N., 124°03′30″ W. thence northwestward to Damon Point at 46°56′50″ N., 124°06′30″ W. thence westward along the north shoreline of the harbor to the north jetty at 46°55′40″ N., 124°10′27″ W. thence northward along the shoreline to the beginning.

(3) Willapa Bay, Wash.: From a point on the shoreline at 46°46′00″ N., 124°05′40″ W. westward to 46°44′00″ N., 124°10′45″ W. thence eastward to a point on the shoreline at 46°35′00″ N., 124°03′45″ W. thence northward along the shoreline around the north end of Leadbetter Point thence southward along the east shoreline of Leadbetter Point to 46°36′00″ N., 124°02′15″ W. thence eastward to 46°36′00″ N., 124°00′00″ W. thence northward to Toke point at 46°42′15″ N., 123°58′00″ W. thence westward along the north shoreline of the harbor and northward along the seaward shoreline to the beginning.

(4) Columbia River Bar, Wash.-Oreg.: From a point on the shoreline at 46°18′00″ N., 124°04′39″ W. thence westward to 46°18′00″ N., 124°09′30″ W. thence southward to 46°12′00″ N., 124°09′30″ W. thence eastward to a point on the shoreline at 46°12′00″ N., 123°59′33″ W. thence eastward to Tansy Point Range Front Light at 46°11′16″ N., 123°55′05″ W.; thence northward to Chinook Point at 46°15′08″ N., 123°55′25″ W. thence northwestward to the north end of Sand Island at 46°17′29″ N., 124°01′25″ W. thence southwestward to a point on the north shoreline of the harbor at 46°16′25″ N., 124°02′28″ W. thence northwestward and southwestward along the north shoreline of the harbor and northward along the seaward shoreline to the beginning.

(5) Nehalem River Bar, Oreg.: From a point on the shoreline 45°41′25″ N., 123°56′16″ W. thence westward 45°41′25″ N., 123°59′00″ W. thence southward to 45°37′25″ N., 123°59′00″ W. thence eastward to a point on the shoreline at 45°37′25″ N., 123°56′38″ W. thence northward along the shoreline to the north end of the south jetty at 45°39′40″ N., 123°55′45″ W. thence westward to a point on the shoreline at 45°39′45″ N.,

123°56′19″ W. thence northward along the shoreline to the beginning.

(6) Tillamook Bay Bar, Oreg.: From a point on the shoreline at 45°35′15″ N., 123°57′05″ W. thence westward 45°35′15″ N., 124°00′00″ W. thence southward to 45°30′00″ N., 124°00′00″ W. thence eastward to a point on the shoreline at 45°30′00″ N., 123°57′40″ W. thence northward along the shoreline to the north end of Kincheloe Point at 45°33′30″ N., 123°56′05″ W. thence northward to a point on the north shoreline of the harbor at 45°33′40″ N., 123°55′59″ W. thence westward along the north shoreline of the harbor then northward along the seaward shoreline to the beginning.

(7) Netarts Bay Bar, Oreg.: From a point on the shoreline at 45°28′05″ N. thence westward to 45°28′05″ N., 124°00′00″ W. thence southward to 45°24′00″ N., 124°00′00″ W. thence eastward to a point on the shoreline at 45°24′00″ N., 123°57′45″ W. thence northward along the shoreline to 45°26′03″ N., 123°57′15″ W. thence eastward to a point on the north shoreline of the harbor at 45°26′00″ N., 123°56′57″ W. thence northward along the shoreline to the beginning.

(8) Siletz Bay Bar, Oreg.: From a point on the shoreline at 44°56′32″ N., 124°01′29″ W. thence westward to 44°56′32″ N., 124°03′00″ W. thence southward to 44°54′40″ N., 124°03′15″ W. thence eastward to a point on the shoreline at 44°54′40″ N., 124°01′55″ W. thence northward along the shoreline to 44°55′35″ N., 124°01′25″ W. thence northward to a point on the north shoreline of the harbor at 44°55′45″ N., 124°01′20″ W. thence westward and northward along the shoreline to the beginning.

(9) Depoe Bay Bar, Oreg.: From a point on the shoreline at 44°49′15″ N., 124°04′00″ W. thence westward to 44°49′15″ N., 124°04′35″ W. thence southward to 44°47′55″ N., 124°04′55″ W. thence eastward to a point on the shoreline at 44°47′53″ N., 124°04′25″ W. thence northward along the shoreline and eastward along the south bank of the entrance channel to the highway bridge thence northward to the north bank at the bridge thence westward along the north bank of the entrance channel and northward along the seaward shoreline to the beginning.

(10) Yaquina Bay Bar, Oreg.: From a point on the shoreline at 44°38′11″ N., 124°03′47″ W. thence westward to 44°38′11″ N., 124°05′55″ W. thence southward to 44°35′15″ N., 124°06′05″ W. thence eastward to a point on the shoreline at 44°35′15″ N., 124°04′02″ W. thence northward along the shoreline and eastward along the south bank of the entrance channel to the highway bridge thence northward to the north bank of the entrance channel at the bridge thence westward along the north bank of the entrance channel and northward along the seaway shoreline to the beginning.

(11) Siuslaw River Bar, Oreg.: From a point on the shoreline at 44°02′00″ N., 124°08′00″ W. thence westward to 44°02′00″ N., 124°09′30″ W. thence southward to 44°00′00″ N., 124°09′30″ W. thence eastward to a point on the shoreline at 44°00′00″ N., 124°08′12″ W. thence northward along the shoreline and southward along the west bank of the entrance channel to 44°00′35″ N., 124°07′48″ W. thence southeastward to a point on the east bank of the entrance channel at 44°00′20″ N., 124°07′31″ W. thence northward along the east bank of the entrance channel and northward along the seaward shoreline to the beginning.

(12) Umpqua River Bar, Oreg.: From a point on the shoreline at 43°41′20″ N., 124°11′58″ W. thence westward to 43°41′20″ N., 124°13′32″ W thence southward to 43°38′35″ N., 124°14′25″ W. thence eastward to a point on the shoreline at 43°38′35″ N., 124°12′35″ W. thence northward along the shoreline to the navigational light ''6'' located on the jetty at 43°40′11″ N., 124°11′56″ W. thence northward to a point on the north bank of the entrance channel at 43°40′33″ N., 124°11′56″ W. thence southwestward along the north bank of the entrance channel thence northward along the seaward shoreline to the beginning.

(13) Coos Bay Bar, Oreg.: From a point on the shoreline at 43°22′15′ N., 124°19′34′ W. thence westward to 43°22′20′ N., 124°22′28′ W. thence southwestward to 43°21′00′ N., 124°23′35′ W. thence southeastward to a point on the shoreline at 43°20′25′ N., 124°22′28′ W. thence northward along the shoreline and eastward along the south shore of the entrance channel to a point on the shoreline at 43°20′52′ N., 124°19′12′ W. thence eastward to a point on the east

shoreline of the harbor at 43°21′00′ N., 124°18′50′ W. thence northward to a point on the west shoreline of the harbor at 43°21′45′ N., 124°19′10′ W. thence south and west along the west shoreline of the harbor thence northward along the seaward shoreline to the beginning.

(14) Coquille River Bar, Oreg.: From a point on the shoreline at 43°08′25′ N., 124°25′04′ W. thence southwestward to 43°07′50′ N., 124°27′05′ W. thence southwestward to 43°07′03′ N., 124°28′25′ W. thence eastward to a point on the shoreline at 43°06′00′ N., 124°25′55′ W. thence northward along the shoreline and eastward along the south shoreline of the channel entrance to 43°07′17′ N., 124°25′00′ W. thence northward to the east end of the north jetty at 43°07′24′ N., 124°24′59′ W. thence westward along the north shoreline of the entrance channel and northward along the seaward shoreline to the beginning.

(15) Rogue River Bar, Oreg.: From a point on the shoreline at 42°26′25′ N., 124°26′03′ W. thence westward to 42°26′10′ N., 124°27′05′ W. thence southward to 42°24′15′ N., 124°27′05′ W. thence eastward to a point on the shoreline at 42°24′15′ N., 124°25′30′ W. thence northward along the shoreline and eastward along the south shoreline of the entrance channel to the highway bridge thence northward across the inner harbor jetty to a point on the north shoreline of the entrance channel at the highway bridge thence westward along the north shoreline of the entrance channel thence northward along the seaward shoreline to the beginning.

(16) Chetco River Bar, Oreg.: From a point on the shoreline at 42°02′35′ N., 124°17′20′ W. thence southeastward to 42°01′45′ N., 124°16′30′ W. thence northwestward to a point on the shoreline at 42°02′10′ N., 124°15′35′ W. thence northwestward along the shoreline thence northward along the east shoreline of the channel entrance to 42°02′47′ N., 124°16′03′ W. thence northward along the west face of the inner jetty and east shoreline of the channel entrance to the highway bridge thence westward to the west shoreline of the channel at the highway bridge thence southward along the west shoreline of the channel thence westward along the seaward shoreline to the beginning.

(b) *Definitions.* For the purposes of this section:

(1) *Bar closure* means that the operation of any vessel within a regulated navigation area established in paragraph (a) of this section has been prohibited by the Coast Guard.

(2) *Bar crossing plan* (also known as a Go/No-Go plan) means a plan developed by local industry professionals, in coordination with the Coast Guard, for a bar within a regulated navigation area established in paragraph (a) of this section and adopted by the master or operator of a small passenger vessel to guide his vessel's operations on and in the vicinity of that bar.

(3) *Bar restriction* means that operation of a recreational or uninspected passenger vessel within a regulated navigation area established in paragraph (a) of this section has been prohibited by the Coast Guard.

(4) *Commercial fishing industry vessel* means a fishing vessel, fish tender vessel, or a fish processing vessel.

(5) *Designated representative* means any Coast Guard commissioned, warrant, or petty officer that has been authorized by the Captain of the Port to act on his behalf.

(6) *Fish processing vessel* means a vessel that commercially prepares fish or fish products other than by gutting, decapitating, gilling, skinning, shucking, icing, freezing, or brine chilling.

(7) *Fish tender vessel* means a vessel that commercially supplies, stores, refrigerates, or transports fish, fish products, or materials directly related to fishing or the preparation of fish to or from a fishing, fish processing, or fish tender vessel or a fish processing facility.

(8) *Fishing vessel* means a vessel that commercially engages in the catching, taking, or harvesting of fish or an activity that can reasonably be expected to result in the catching, taking, or harvesting of fish.

(9) *Readily accessible* means equipment that is taken out of stowage and is available within the same space as any person for immediate use during an emergency.

(10) *Recreational vessel* is any vessel manufactured or used primarily for non-commercial use or leased, rented, or chartered to another for the latter's

non-commercial use. It does not include a vessel engaged in carrying paying passengers.

(11) *Small passenger vessel* means a vessel inspected under 46 CFR subchapter T or 46 CFR subchapter K.

(12) *Uninspected passenger vessel* means an uninspected vessel—

(i) Of at least 100 gross tons;

(A) Carrying not more than 12 passengers, including at

least one passenger-for-hire; or

(B) That is chartered with the crew provided or specified by the owner or the owner's representative and carrying not more than 12 passengers; or

(ii) Of less than 100 gross tons;

(A) Carrying not more than six passengers, including at least one passenger-for-hire; or

(B) That is chartered with the crew provided or specified by the owner or the owner's representative and carrying not more than six passengers.

(13) *Unsafe condition* exists when the wave height within a regulated navigation area identified in paragraph (a) of this section is equal to or greater than the maximum wave height determined by the formula L/10 + F = W where:

L = Overall length of a vessel measured in feet in a straight horizontal line along and parallel with the centerline between the intersections of this line with the vertical planes of the stem and stern profiles excluding deckhouses and equipment.

F = The minimum freeboard when measured in feet from the lowest point along the upper strake edge to the surface of the water.

W = Maximum wave height in feet to the nearest highest whole number.

(c) *Regulations*—(1)(i) *Bar restriction.* Passage across the bars located in the regulated navigation areas established in paragraph (a) of this section will be restricted for recreational and uninspected passenger vessels as determined by the Captain of the Port (COTP) or his designated representative. In making this determination, the COTP or his designated representative will determine whether an unsafe condition exists for such vessels as defined in paragraph (b) of this section. Additionally, the COTP or his designated representative will use their professional maritime experience and knowledge of local environmental conditions in making their determination. Factors that will be considered include, but are not limited to: size and type of vessel, sea state, winds, wave period, and tidal currents. When a bar is restricted, the operation of recreational and uninspected passenger vessels in the regulated navigation area established in paragraph (a) of this section in which the restricted bar is located is prohibited unless specifically authorized by the COTP or his designated representative.

(ii) *Bar closure.* The bars located in the regulated navigation areas established in paragraph (a) of this section will be closed to all vessels whenever environmental conditions exceed the operational limitations of the relevant Coast Guard search and rescue resources as determined by the COTP. When a bar is closed, the operation of any vessel in the regulated navigation area established in paragraph (a) of this section in which the closed bar is located is prohibited unless specifically authorized by the COTP or his designated representative. For bars having deep draft vessel access, the COTP will consult with the local pilots association, when practicable, prior to closing the affected bar.

(iii) The Coast Guard will notify the public of bar restrictions and bar closures via a Broadcast Notice to Mariners on VHF–FM Channel 16 and 22A. Additionally, Coast Guard personnel may be on-scene to advise the public of any bar restrictions and/or closures.

(2) *Safety requirements for recreational vessels.* The operator of any recreational vessel operating in a regulated navigation area established in paragraph (a) of this section shall ensure that whenever their vessel is being towed or escorted across a bar by the Coast Guard all persons located in any unenclosed areas of their vessel are wearing lifejackets and that lifejackets are readily accessible for/to all persons located in any enclosed areas of their vessel.

(3) *Safety requirements for Uninspected Passenger Vessels (UPV).* (i) The master or operator of any uninspected passenger vessel operating in a regulated navigation area established in paragraph (a) of this section shall ensure that all persons located in any

unenclosed areas of their vessel are wearing lifejackets and that lifejackets are readily accessible for/to all persons located in any enclosed areas of their vessel:

(A) When crossing the bar and a bar restriction exists for recreational vessels of the same length or

(B) Whenever their vessel is being towed or escorted across the bar by the Coast Guard.

(ii) The master or operator of any uninspected passenger vessel operating in a regulated navigation area established in paragraph (a) of this section during the conditions described in paragraph (c)(3)(i)(A) of this section shall contact the Coast Guard on VHF–FM Channel 16 or 22A prior to crossing the bar between sunset and sunrise. The master or operator shall report the following:

(A) Vessel name,

(B) Vessel location or position,

(C) Number of persons onboard the vessel, and

(D) Vessel destination.

(4) *Safety requirements for Small Passenger Vessels (SPV).* (i) The master or operator of any small passenger vessel operating in a regulated navigation area established in paragraph (a) of this section shall ensure that all persons located in any unenclosed areas of their vessel are wearing lifejackets and that lifejackets are readily accessible for/to all persons located in any enclosed areas of their vessel:

(A) When crossing the bar and a bar restriction exists for recreational vessels or uninspected passenger vessels of the same length or

(B) Whenever their vessel is being towed or escorted across the bar by the Coast Guard.

(ii) Small passenger vessels with bar crossing plans that have been reviewed by and accepted by the Officer in Charge, Marine Inspection (OCMI) are exempt from the safety requirements provided in paragraph (c)(4)(i) of this section during the conditions described in paragraph (c)(4)(i)(A) of this section so long as when crossing the bar the master or operator ensures that all persons on their vessel wear lifejackets in accordance with their bar crossing plan. If the vessel's bar crossing plan does not specify the conditions when the persons on their vessel must wear lifejackets, however, then the master or operator must comply with the safety requirements provided in paragraph (c)(4)(i) of this section in their entirety.

(iii) The master or operator of any small passenger vessel operating in a regulated navigation area established in paragraph (a) of this section during the conditions described in paragraph (c)(4)(i)(A) of this section shall contact the Coast Guard on VHF–FM Channel 16 or 22A prior to crossing the bar between sunset and sunrise. The master or operator shall report the following:

(A) Vessel name,

(B) Vessel location or position,

(C) Number of persons onboard the vessel, and

(D) Vessel destination.

(5) *Safety requirements for Commercial Fishing Vessels (CFV).* (i) The master or operator of any commercial fishing vessel operating in a regulated navigation area established in paragraph (a) of this section shall ensure that all persons located in any unenclosed areas of their vessel are wearing lifejackets or immersion suits and that lifejackets or immersion suits are readily accessible for/to all persons located in any enclosed spaces of their vessel:

(A) When crossing the bar and a bar restriction exists for recreational vessels or uninspected passenger vessels of the same length or

(B) Whenever their vessel is being towed or escorted across the bar by the Coast Guard.

(ii) The master or operator of any commercial fishing vessel operating in a regulated navigation area established in paragraph (a) of this section during the conditions described in paragraph (c)(5)(i)(A) of this section shall contact the Coast Guard on VHF–FM Channel 16 or 22A prior to crossing the bar between sunset and sunrise. The master or operator shall report the following:

(A) Vessel name,

(B) Vessel location or position,

(C) Number of persons onboard the vessel, and

(D) Vessel destination.

(6) All persons and vessels within the regulated navigation areas established in paragraph (a) of this section must comply with the orders of Coast Guard

personnel. Coast Guard personnel include commissioned, warrant, and petty officers of the United States Coast Guard.

[USCG–2008–1017, 74 FR 59101, Nov. 17, 2009, as amended at 75 FR 10688, Mar. 9, 2010; 75 FR 18055, Apr. 9, 2010; 75 FR 41988, July 20, 2010]

§ 165.1326 Regulated Navigation Areas; Port of Portland Terminal 4, Willamette River, Portland, OR.

(a) *Regulated navigation areas*. Each of the following areas is a regulated navigation area:

(1) All waters of the Willamette River in the head of the Port of Portland's Terminal 4 Slip 3, encompassed by a line commencing at 45°36′ 01.861″ N/122°46′ 20.995″ W thence to 45°36′ 01.455 N/122°46′ 20.887″ W thence to 45°36′ 00.993″ N/122°46′ 20.714″ W thence to 45°36′ 00.725″ N/122°46′ 20.923″ W thence to 45°36′ 00.731″ N/122°46′ 21.262″ W thence to 45°36′ 00.712″ N/122°46′ 21.823″ W thence to 45°36′ 01.230″ N/122°46′ 22.048″ W thence to 45°36′ 01.651″ N/122°46′ 22.168″ W thence to 45°36′ 01.684″ N/122°46′ 22.372″ W thence to 45°36′ 01.873″ N/122°46′ 22.303″ W thence to 45°36′ 02.065″ N/122°46′ 21.799″ W thence to 45°36′ 01.989″ N/122°46′ 21.574″ W thence to 45°36′ 01.675″ N/122°46′ 21.483″ W thence to 45°36′ 01.795″ N/122°46′ 21.442″ W thence to 45°36′ 01.861″ N 122°46′ 20.995″ W.

(2) All waters of the Willamette River in Wheeler Bay between Slip 1 and Slip 3 in the Port of Portland's Terminal 4, encompassed by a line commencing at 45°36′ 10.634″ N/122°46′ 39.056″ W thence to 45°36′ 10.269″ N/122°46′ 37.140″ W thence to 45°36′ 10.027″ N/122°46′ 36.050″ W thence to 45°36′ 09.722″ N/122°46′ 34.181″ W thence to 45°36′ 09.425″ N/122°46′ 33.118″ W thence to 45°36′ 08.960″ N/122°46′ 32.150″ W thence to 45°36′ 08.653″ N/122°46′ 31.681″ W thence to 45°36′ 08.191″ N/122°46′ 31.341″ W thence to 45°36′ 07.886″ N/122°46′ 31.269″ W thence to 45°36′ 07.517″ N/122°46′ 31.038″ W thence to 45°36′ 07.235″ N/122°46′ 31.066″ W thence to 45°36′ 07.040″ N/122°46′ 30.941″ W thence to 45°36′ 06.697″ N/122°46′ 30.987″ W thence to 45°36′ 06.509″ N/122°46′ 31.251″ W thence to 45°36′ 06.201″ N/122°46′ 31.517″ W thence to 45°36′ 06.081″ N/122°46′ 1.812″ W thence to 45°36′ 06.550″ N/122°46′ 32.124″ W thence to 45°36′ 06.970″ N/122°46′ 31.895″ W thence to 45°36′ 07.172″ N/122°46′ 31.868″ W thence to 45°36′ 07.883″ N/122°46′ 32.316″ W thence to 45°36′ 08.370″ N/122°46′ 32.927″ W thence to 45°36′ 08.775″ N/122°46′ 33.888″ W thence to 45°36′ 09.121″ N/122°46′ 35.337″ W thence to 45°36′ 09.230″ N/122°46′ 36.166″ W thence to 45°36′ 09.442″ N/122°46′ 37.759″ W thence to 45°36′ 09.865″ N/122°46′ 39.511″ W thence to 45°36′ 10.421″ N/122°46′ 39.469″ W thence to 45°36′ 10.634″ N/122°46′ 39.056″ W.

(b) *Regulations*. All vessels are prohibited from anchoring, dragging, dredging, or trawling in the regulated navigation areas established in paragraph (a) of this section.

[USCG–2009–0370, 75 FR 20525, Apr. 20, 2010]

§ 165.1327 Security Zone; escorted U.S. Navy submarines in Sector Seattle Captain of the Port Zone.

(a) *Location*. The following area is a security zone: All waters within 1000 yards of any U.S. Navy submarine that is operating in the Sector Puget Sound Captain of the Port Zone, as defined in 33 CFR Section 3.65–10, and is being escorted by the Coast Guard.

(b) *Regulations*. In accordance with the general regulations in 33 CFR Section 165, Subpart D, no person or vessel may enter or remain in the security zone created by paragraph (a) of this section unless authorized by the Coast Guard patrol commander. The Coast Guard patrol commander will coordinate with Vessel Traffic System users on a case-by-case basis to make appropriate passing arrangements under the circumstances. 33 CFR Section 165, Subpart D, contains additional provisions applicable to the security zone created in paragraph (a) of this section.

(c) *Notification*. The Coast Guard security escort will attempt, when necessary and practicable, to notify any persons or vessels inside or in the vicinity of the security zone created in paragraph (a) of this section of its existence via VHF Channel 16 and/or any other means reasonably available.

[USCG–2009–1057, 75 FR 28204, May 20, 2010, as amended by USCG–2010–0351, 75 FR 47212, Aug. 5, 2010]

§ 165.1328 Regulated Navigation Area; U.S. Navy submarines, Hood Canal, WA.

(a) *Location*. The following area is a regulated navigation area (RNA): All waters of the Hood Canal in the State of Washington whenever any U.S. Navy submarine is operating in the Hood Canal and is being escorted by the Coast Guard. For purposes of this section, ''Hood Canal'' means all waters of Hood Canal, including Dabob Bay, located between two lines with the first line connecting positions 47°37.9′ N, 122°57.1′ W and 47°37.9′ N, 122°52.9′ W and the second line connecting positions 48°00.7′ N, 122°41.0′ W and 47°56.4′ N, 122°36.9′ W

(b) *Regulations*. All persons and vessels located within the RNA created by paragraph (a) of this section shall follow all lawful orders and/or directions given to them by Coast Guard security escort personnel. 33 CFR Section 165, Subpart B, contains additional provisions applicable to the RNA created in paragraph (a) of this section.

(c) *Notification*. The Coast Guard security escort will attempt, when necessary and practicable, to notify any persons or vessels in the RNA created in paragraph (a) of this section of its existence via VHF Channel 16 and/or any other means reasonably available.

[USCG–2009–1058, 75 FR 27640, May 18, 2010]

§ 165.1329 Regulated Navigation Area; Thea Foss and Wheeler-Osgood Waterways EPA Superfund Cleanup Site, Commencement Bay, Tacoma, WA.

(a) *Regulated areas*. The following areas are regulated navigation areas:

(1) All waters of the Thea Foss Waterway bounded by a line connecting the following points: Point 1: 47°15′43.49″ N, 122°26′23.29″ W; Point 2: 47°15′44.59″ N, 122°26′19.89″ W; Point 3: 47°15′39.01″ N, 122°26′15.99″ W; Point 4: 47°15′37.91″ N, 122°26′19.39″ W. [Datum: NAD 1983].

(2) All waters of the Thea Foss Waterway bounded by a line connecting the following points: Point 1: 47°15′22.74″ N, 122°25′57.15″ W; Point 2: 47°15′22.52″ N, 122°26′0.18″ W; Point 3: 47°15′18.05″ N, 122°25′59.48″ W; Point 4: 47°15′18.26″ N, 122°25′56.45″ W. [Datum: NAD 1983].

(3) All waters of the Thea Foss and Wheeler-Osgood Waterways south of a line bounded by connecting the following points: Point 1: 47°15′13.94″ N, 122°26′05.56″ W; Point 2: 47°15′15.01″ N, 122°25′55.14″ W. [Datum: NAD 1983].

(b) *Regulations*. (1) All vessels and persons are prohibited from activities that would disturb the seabed, such as anchoring, dragging, trawling, spudding, or other activities that involve disrupting the integrity of the sediment caps installed in the designated regulated navigation area, pursuant to the remediation efforts of the U.S. Environmental Protection Agency (EPA) and others in the Thea Foss and Wheeler-Osgood Waterways EPA superfund cleanup site. Vessels may otherwise transit or navigate within this area without reservation.

(2) The prohibition described in paragraph (b)(1) of this section does not apply to vessels or persons engaged in activities associated with remediation efforts in the Thea Foss or Wheeler-Osgood Waterways superfund sites, provided that the Captain of the Port, Puget Sound (COTP), is given advance notice of those activities by the EPA.

(c) *Waiver*. Upon written request stating the need and proposed conditions of the waiver, and any proposed precautionary measures, the COTP may authorize a waiver from this section if the COTP determines that the activity for which the waiver is sought can take place without undue risk to the remediation efforts described in paragraph (b)(1) of this section. The COTP will consult with EPA in making this determination when necessary and practicable.

[USCG–2008–0747, 75 FR 76281, Dec. 8, 2010]

§ 165.1330 Safety Zone; Fleet Week Maritime Festival, Pier 66, Elliott Bay, Seattle, Washington.

(a) *Location*. The following area is a safety zone: All waters extending 100 yards from Pier 66, Elliott Bay, WA within a box encompassed by the points, 47°36.719′ N, 122°21.099′ W; 47°36.682′ N, 122°21.149′ W; 47°36.514′ N, 122°20.865′ W; and 47°36.552′ N, 122°20.814′ W.

(b) *Regulations*. In accordance with the general regulations in 33 CFR Part 165, Subpart C, no vessel operator may

enter, transit, moor, or anchor within this safety zone, except for vessels authorized by the Captain of the Port or Designated Representative, thirty minutes prior to the beginning, during and thirty minutes following the conclusion of the Parade of Ships. For the purpose of this rule, the Parade of Ships includes both the pass and review of the ships near Pier 66 and the aerial demonstrations immediately following the pass and review. The Captain of the Port may be assisted by other federal, state, or local agencies as needed.

(c) *Authorization*. In order to transit through this safety zone, authorization must be granted by the Captain of the Port, Puget Sound, or their Designated Representative. All vessel operators desiring entry into this safety zone shall gain authorization by contacting either the on-scene U.S. Coast Guard patrol craft on VHF Ch 13 or Ch 16, or Coast Guard Sector Puget Sound Joint Harbor Operations Center (JHOC) via telephone at (206) 217–6002. Requests shall indicate the reason why movement within the safety zone is necessary and the vessel's arrival and/or departure facility name, pier and/or berth. Vessel operators granted permission to enter this safety zone will be escorted by the on-scene patrol until no longer within the safety zone.

(d) *Enforcement period*. This rule is enforced annually during the parade of ships which typically occurs on a Wednesday during the last week of July or the first week in August from 8 a.m. until 8 p.m. unless cancelled sooner by the Captain of the Port.

[USCG–2010–0062, 76 FR 30018, May 24, 2011]

§ 165.1332 Safety Zones; annual firework displays within the Captain of the Port, Puget Sound Area of Responsibility.

(a) *Safety Zones*. The following areas are designated safety zones:

(1) All waters of Puget Sound, Washington, extending to a 450 yard radius from the following launch sites:

CAPTAIN OF THE PORT PUGET SOUND AOR ANNUAL FIREWORK DISPLAYS

Event name (typically)	Event location	Latitude	Longitude
Steilacoom Annual Fireworks	Steilacoom	47°10.4′ N	122°36.2′ W
Tacoma Freedom Fair	Commencement Bay	47°17.103′ N	122°28.410′ W
City of Anacortes	Fidalgo Bay	48°30.016′ N	122°36.154′ W
Alderbrook Resort & Spa Fireworks	Hood Canal	47°21.033′ N	123°04.1′ W
Fireworks Display	Henderson Bay	47°21.8′ N	122°38.367′ W
Des Moines Fireworks	Des Moines	47°24.117′ N	122°20.033′ W
Three Tree Point Community Fireworks	Three Tree Point	47°27.033′ N	122°23.15′ W
City of Renton Fireworks	Renton, Lake Washington	47°30.386′ N	122°12.502′ W
Port Orchard Fireworks	Port Orchard	47°32.883′ N	122°37.917′ W
Chimes and Lights	Port Orchard	47°32.75′ N	122°38.033′ W
Seattle Seafair	Lake Washington	47°34.333′ N	122°16.017′ W
Mercer Island Celebration	Mercer Island	47°35.517′ N	122°13.233′ W
Medina Days	Medina Park	47°36.867′ N	122°14.5′ W
Bainbridge Island Fireworks	Eagle Harbor	47°37.142′ N	122°30.397′ W
Whaling Days	Dyes Inlet	47°38.65′ N	122°41.35′ W
Yarrow Point Community	Yarrow Point	47°38.727′ N	122°13.466′ W
City of Kenmore Fireworks	Lake Forest Park	47°45.25′ N	122°15.75′ W
Kirkland Concours D'Elegence	Kirkland	47°39.521′ N	122°12.439′ W
Kirkland Fireworks	Kirkland	47°40.583′ N	122°12.84′ W
Liberty Bay Fireworks	Liberty Bay	47°43.917′ N	122°39.133′ W
Sheridan Beach Community	Lake Forest Park	47°44.783′ N	122°16.917′ W
Langlie's Old Fashioned Independence Celebration.	Indianola	47°44.817′ N	122°31.533′ W
Lake Forest Park Fireworks	Lake Forest Park	47°45.117′ N	122°16.367′ W
Vashon Island Fireworks	Quartermaster Harbor	47°24.0′ N	122°27.0′ W
Kingston Fireworks	Appletree Cove	47°47.65′ N	122°29.917′ W
Mukilteo Lighthouse Festival	Possession Sound	47°56.9′ N	122°18.6′ W
Brewster Fire Department Fireworks	Brewster	48°05.362′ N	119°47.147′ W
Port Angeles	Port Angeles Harbor	48°07.033′ N	123°24.967′ W
Port Townsend Sunrise Rotary	Port Townsend	48°08.413′ N	122°45.531′ W
Friday Harbor Independence	Friday Harbor	48°32.255′ N	123°0.654′ W
Roche Harbor Fireworks	Roche Harbor	48°36.7′ N	123°09.5′ W
Deer Harbor Annual Fireworks Display	Deer Harbor	48°37.0′ N	123°00.25′ W.
Orcas Island	Orcas Island	48°41.317′ N	122°54.467′ W
Blast Over Bellingham	Bellingham Bay	48°44.933′ N	122°29.667′ W
True Colors Event	Blaine	48°59.488′ N	122°46.339′ W
John Eddy Wedding	Magnolia Bluff	49°38.988′ N	122°25.356′ W
City of Mount Vernon Fireworks	Edgewater Park	48°25.178′ N	122°20.424′ W

CAPTAIN OF THE PORT PUGET SOUND AOR ANNUAL FIREWORK DISPLAYS—Continued

Event name (typically)	Event location	Latitude	Longitude
Chase Family Fourth at Lake Union	Lake Union	47°38.418′ N	122°20.111′ W
Port Ludlow Fireworks	Port Ludlow	47°55.161′ N	122°41.157′ W
Boston Harbor 4th of July	Boston Harbor	47°08.626′ N	122°54.149′ W
Everett 4th of July	Port Gardner	48°00.672′ N	122°13.391′ W

(2) [Reserved]

(b) *Special requirements.* Firework barges or launch sites on land used in locations stated in this rule shall display a sign. The sign will be affixed to the port and starboard side of the barge or mounted on a post 3 feet above ground level when on land and in close proximity to the shoreline facing the water labeled ''FIREWORKS–DANGER–STAY AWAY.'' This will provide on-scene notice that the safety zone is, or will, be enforced on that day. This notice will consist of a diamond shaped sign, 4 foot by 4 foot, with a 3 inch orange retro-reflective border. The word ''DANGER' shall be 10 inch black block letters centered on the sign with the words ''FIREWORKS'' and ''STAY AWAY'' in 6 inch black block letters placed above and below the word ''DANGER'' respectively on a white background. An on-scene patrol vessel will enforce these safety zones 30 minutes prior to the start and 30 minutes after the conclusion of the fireworks display.

(c) *Notice of enforcement.* These safety zones will be activated and thus subject to enforcement, under the following conditions: the Coast Guard must receive and approve a marine event permit for each firework display and then the Captain of the Port will cause notice of the enforcement of these safety zones to be made by all appropriate means to provide notice to the affected segments of the public as practicable, in accordance with 33 CFR 165.7(a). The Captain of the Port will issue a Broadcast Notice to Mariners and Local Notice to Mariners notifying the public of activation and suspension of enforcement of these safety zones. Additionally, an on-scene Patrol Commander will ensure enforcement of this safety zone by limiting the transit of non-participating vessels in the designated areas described above.

(d) *Regulations.* In accordance with the general regulations in 33 CFR part 165, subpart C, no vessel operator may enter, transit, moor, or anchor within this safety zone, except for vessels authorized by the Captain of the Port or Designated Representative.

(e) *Authorization.* All vessel operators who desire to enter the safety zone must obtain permission from the Captain of the Port or Designated Representative by contacting either the on-scene patrol craft on VHF Ch 13 or Ch 16 or the Coast Guard Sector Seattle Joint Harbor Operations Center (JHOC) via telephone at (206) 217–6002.

(f) *Enforcement period.* This rule will be enforced from 5 p.m. until 1 a.m. each day a barge with a ''FIREWORKS–DANGER–STAY AWAY'' sign is located within any of the above designated safety zone locations and meets the criteria established in section (b), within the following timeframes:

(1) The last two weeks of December until the conclusion of the first weekend of January.

(2) The last weekend of June until the conclusion of the third week of July.

(3) The second weekend of August until the conclusion of the fourth week of August.

(4) The first weekend of September until the conclusion of the third week of September.

(5) The first weekend of December.

(g) *Contact information.* Questions about safety zones and related events should be addressed to COMMANDER (spw), U.S. COAST GUARD SECTOR, Attention: Waterways Management Division, 1519 Alaskan Way South, Seattle, WA 98134–1192.

[USCG–2010–0063, 75 FR 33700, June 15, 2010, as amended by USCG–2011–0842, 76 FR 61265, Oct. 4. 2011; USCG–2013–0220, 78 FR 29025, May 17, 2013]

§ 165.1333 Security Zones, Seattle's Seafair Fleet Week moving vessels, Puget Sound, WA.

(a) *Location*. The following areas are security zones: all navigable waters within 500 yards of each designated participating vessel while each such vessel is in the Sector Puget Sound Captain of the Port (COTP) zone, as defined in 33 CFR 3.65–10, during a time specified in paragraph (e) of this section. The Coast Guard will publish a notice in the FEDERAL REGISTER each year at least 03 days before the start of the Seattle Seafair Fleet Week to identify the designated participating vessels for that year. The Coast Guard will also provide this information in the Local Notice to Mariners.

(b) *Definitions*. For purposes of this section—

Designated participating vessel means a military vessel participating in the Seattle Seafair Fleet Week that has been designated by the Sector Puget Sound COTP in accordance with this section.

Designated representative means any Coast Guard commissioned, warrant, or petty officer who has been designated by the COTP to implement or enforce this section.

Seattle Seafair Fleet Week means an annual event involving a parade of U.S. Navy, U.S. Coast Guard, and foreign military ships in Seattle's Elliott Bay waterfront and tours of those ships while docked at Port of Seattle facilities.

(c) *Regulations*. Under 33 CFR Part 165, Subpart D, no person or vessel may enter or remain in the security zones described in paragraph (a) of this section without the permission of the COTP or a designated representative. The COTP has granted general permission for vessels to enter the outer 400 yards of the security zones as long as those vessels within the outer 400 yards of the security zones operate at the minimum speed necessary to maintain course unless required to maintain speed by the navigation rules. The COTP may be assisted by other federal, state or local agencies with the enforcement of the security zones.

(d) *Authorization*. All vessel operators who desire to enter the inner 100 yards of the security zones or transit the outer 400 yards at greater than minimum speed necessary to maintain course must obtain permission from the COTP or a Designated Representative by contacting the on-scene Coast Guard patrol craft on VHF 13 or Ch 16. Requests must include the reason why movement within this area is necessary. Vessel operators granted permission to enter the security zones will be escorted by the on-scene Coast Guard patrol craft until they are outside of the security zones.

(e) *Annual enforcement period*. The security zones described in paragraph (a) of this section will be enforced during Seattle Seafair Fleet Week each year for a period of up to one week. The Seattle Seafair Fleet Week will occur sometime between July 25 and August 14. The annual FEDERAL REGISTER notice identifying the designated participating vessels will also identify the specific dates of the event for that year.

[USCG–2011–1126, 77 FR 40524, July 10, 2012]

§ 165.1334 Security Zone; U.S. Coast Guard BSU Seattle, Pier 36, Elliot Bay, Seattle, WA.

(a) *Location*. The following area is a security zone: All waters in Elliot Bay east of a line from 47°35′26.67″ N 122°20′34.84″ W to 47°35′23.69″ N 122°20′34.77″ W at Pier 36, Elliot Bay, Seattle, WA.

(b) *Regulations:* Under 33 CFR part 165, subpart D, no vessel may enter, transit, moor, or anchor within this security zone located at Pier 36, Elliot Bay, WA, except for vessels authorized by the Captain of the Port Puget Sound or Designated Representative.

(c) *Authorization:* To request authorization to operate within this security zone, contact United States Coast Guard Sector Puget Sound Joint Harbor Operations Center at 206–217–6001.

[USCG–2010–0021, 75 FR 53196, Aug. 31, 2010, as amended at 75 FR 67032, Nov. 1, 2010]

§ 165.1335 Security Zone; Vessels Carrying Hazardous Cargo, Sector Columbia River Captain of the Port Zone.

(a) *Location*. The following area is a security zone: All waters within 500 yards, in all directions, of any vessel carrying hazardous cargo, as determined by the Captain of the Port

(COTP) Columbia River, while such a vessel is located in the Sector Columbia River COTP Zone as defined in 33 CFR 3.65–15 and the COTP Columbia River determines that a security zone is necessary and enforcement of the security zone is practicable.

(b) *Regulations*. (1) In accordance with the general regulations in 33 CFR part 165, Subpart D, no person or vessel may enter or remain in a security zone created by this section without the permission of the COTP Columbia River or his/her designated representative. Designated representatives are Coast Guard personnel authorized by the COTP Columbia River to grant persons or vessels permission to enter or remain in a security zone created by this section. Subpart D of 33 CFR part 165 contains additional provisions applicable to a security zone created by this section.

(2) To request permission to enter a security zone created by this section, contact Coast Guard Sector Columbia River at telephone number 503–861–6212 or via VHF channel 16 (156.8 MHz) or VHF channel 22 (157.1 MHz).

(c) *Notification*. When a security zone is created by this section, one or more Coast Guard vessels will be present to enforce the security zone and the COTP Columbia River will issue a local broadcast notice to mariners.

[USCG–2009–1134, 76 FR 28317, May 17, 2011]

§ 165.1336 Regulated Navigation Area; Pacific Sound Resources and LockheedShipyard Superfund Sites, Elliott Bay, Seattle, WA.

(a) *Regulated areas*. The following areas are regulated navigation areas:

(1) All waters inside an area beginning at a point on the shore at 47°35′ 02.7″ N 122°22′23.00″ W; thence north to 47°35′26.00″ N 122°22′23.00″ W; thence east to 47°35′26.00″ N 122°21′52.50″ W; thence south to 47°35′10.80″ N 122°21′52.50″ W; thence southwest to a point on the shoreline at 47°35′05.9″ N 122°21′58.00″ W. [Datum: NAD 1983].

(2) All waters inside an area beginning at 47°34′ 52.16″ N 122°21′27.11″ W; thence to 47°34′ 53.46″ N 122°21′30.42″ W; thence to 47°34′ 37.92″ N 122°21′30.51″ W; thence to 47°34′ 37.92″ N 122°21′27.65″ W. [Datum: NAD 1983].

(b) *Regulations*. (1) All vessels and persons are prohibited from activities that would disturb the seabed, such as anchoring, dragging, trawling, spudding, or other activities that involve disrupting the integrity of the sediment caps installed in the designated regulated navigation area, pursuant to the remediation efforts of the U.S. Environmental Protection Agency (EPA) and others in the Pacific Sound Resources and Lockheed Shipyard EPA superfund sites. Vessels may otherwise transit or navigate within this area without reservation.

(2) The prohibition described in paragraph (b)(1) of this section does not apply to vessels or persons engaged in activities associated with remediation efforts in the superfund sites, provided that the Captain of the Port, Puget Sound (COTP), is given advance notice of those activities by the EPA.

(3) Nothing in this section is intended to conflict with treaty fishing rights of the Muckleshoot and Suquamish tribes, and they are not restricted from any type of fishing in the described area.

(c) *Waivers*. Upon written request stating the need and proposed conditions of the waiver, and any proposed precautionary measures, the COTP may authorize a waiver from this section if the COTP determines that the activity for which the waiver is sought can take place without undue risk to the remediation efforts described in paragraph (b)(1) of this section. The COTP will consult with EPA in making this determination when necessary and practicable.

[USCG–2010–1145, 77 FR 21435, Apr. 10, 2012]

§ 165.1337 Regulated Navigation Area, Zidell Waterfront Property, Willamette River, OR.

(a) *Regulated navigation area*. The following area is a regulated navigation area: All waters within the area bounded by the following points: 45°29′55.12″ N/122°40′2.19″ W; thence continuing to 45°29′55.14″ N/122°39′59.36″ W; thence continuing to 45°29′56.30″ N/122°39 59.09″ W; thence continuing to 45°29′57.51″ N/122°39′59.64″ W; thence continuing to 45°29′58.72″ N/122°39′59.64″ W; thence continuing to 45°30′0.52″ N/122°39′59.94″ W; thence continuing to 45°30′1.95″ N/

122°40′0.46″ W; thence continuing to 45°30′3.44″ N/122°40′0.78″ W; thence continuing to 45°30' 4.87″ N/122°40' 0.95″ W; thence continuing to 45°30′7.33″ N/122°40′1.80″ W; thence continuing to 45°30′8.11″ N/122°40′2.69″ W; thence continuing to 45°30′8.83″ N/122°40′3.81″ W; thence continuing to 45°30′13.06″ N/122°40′5.39″ W; thence continuing to 45°30′15.30″ N/122°40′6.93″ W; thence continuing to 45°30′17.78″ N/122°40′8.16″ W; thence continuing to 45°30′20.53″ N/122°40′9.07″ W; thence continuing to 45°30′20.90″ N/122°40′11.52″ W; thence continuing to 45°30′24.04″ N/122°40′12.53″ W; thence continuing to 45°30′23.79″ N/122°40′14.87″ W; thence continuing along the shoreline to 45°29′55.12″ N/122°40′2.19″ W. Geographically the regulated navigation area covers all waters adjacent to the Zidell Waterfront Property on the Willamette River extending from the west bank of the river out 200 to 400 feet into the river depending on the exact location between approximate river mile 14.2 near the Ross Island Bridge and approximate river mile 13.5 near the Marquam Bridge.

(b) *Regulations*. All vessels are prohibited from anchoring, dragging, dredging, or trawling in the regulated navigation area established by this section. See 33 CFR part 165, subpart B, for additional information and requirements.

[USCG–2011–0254, 77 FR 19546, Apr. 2, 2012]

§ 165.1339 Safety Zone; Coast Guard Exercise Area, Hood Canal, Washington.

(a) *Location*. The following area is a safety zone: All waters encompassed within 500 yards of any vessel that is involved in a Coast Guard training exercise while such vessel is transiting Hood Canal, WA between Foul Weather Bluff and the entrance to Dabob Bay. Vessels involved will be various sizes and can be identified as those flying the Coast Guard Ensign.

(b) *Regulations*. In accordance with the general regulations in 33 CFR Part 165, Subpart C, no person may enter or remain in the safety zone created in this rule unless authorized by the Captain of the Port or a Designated Representative. See 33 CFR Part 165, Subpart C, for additional information and requirements. Vessel operators wishing to enter the zone during the enforcement period must request permission for entry by contacting the on-scene patrol commander on VHF channel 13 or 16, or the Sector Puget Sound Joint Harbor Operations Center at (206) 217–6001.

(c) *Definition*. Training exercises are defined as full scale exercises that are significant in nature and involve multiple units and vessels. This safety zone will not be utilized by operations and training which is conducted daily or is routine in nature.

(d) *Enforcement period*. The safety zone described in paragraph (a) of this section would be enforced by the Captain of the Port only upon notice. Notice of enforcement by the Captain of the Port will be provided 45 days prior to execution of the exercise by all appropriate means, in accordance with 33 CFR 165.7(a). Such means will include publication in the FEDERAL REGISTER, and may also include Broadcast Notice to Mariners, Local Notice to Mariners, or both.

[USCG–2012–0900, 78 FR 8029, Feb. 7, 2013]

FOURTEENTH COAST GUARD DISTRICT

§ 165.14–1414 Safety Zones; Hawaiian Islands Commercial Harbors; HI.

(a) *Location*. The following commercial harbors are safety zones:

(1) All waters of Nawiliwili Harbor, Kauai inland from a line drawn between 21° 56′58″ N, 159° 21′28″ W and 21° 57′11″ N, 159° 21′10″ W;

(2) All waters of Port Allen, Kauai immediately adjacent to the Department of Transportation commercial pier (located at 21° 53′59″ N, 157° 35′21″ W) extending out to 100 yards from the piers faces;

(3) All waters of Barber's Point Harbor, Oahu inland from a line drawn between 21° 19′30″ N, 158° 07′14″ W and 21° 19′18″ N, 158° 07′18″ W;

(4) All waters of Honolulu Harbor, Oahu inland from a line drawn between 21° 17′56″ N, 157° 52′15″ W and 21° 17′45″ N, 157° 52′10″ W;

(5) All waters of Kaunakakai Harbor, immediately adjacent to the Interisland Cargo Terminal or Ferry Terminal Pier out to 100 yards of the west face of the pier;

(6) All waters of Kaumalapau Harbor, Lanai inland from a line drawn between 20° 47′10″ N, 156° 59′32″ W and 21° 47′01″ N, 156° 59′31″ W;

(7) All waters of Kahului Harbor, Maui inland from a line drawn between 20° 54′01″ N, 156° 28′26″ W and 20° 54′02″ N, 156° 28′18″ W;

(8) All waters of Kawaihae Harbor, Hawaii immediately adjacent to commercial piers 1 and 2 extending out to 100 yards from the piers faces.

(9) All waters of Hilo Harbor, Hawaii immediately adjacent to commercial piers 1 and 2 extending out to 100 yards from the piers faces.

(10) The activation of these safety zones may include any combination of these harbors, or all of these harbors, dependent upon details in the tsunami warning. These safety zones extend from the surface of the water to the ocean floor.

(b) *Regulations.* When the safety zones are activated and, therefore, subject to enforcement, no person or vessel may enter or remain in the safety zone except for support vessels, support personnel, and other vessels authorized by the Captain of the Port, Sector Honolulu (COTP), or a designated representative of the COTP. All commercial vessels must evacuate the harbor and transit seaward beyond the 50 fathom (300 foot) curve. These commercial harbors will remain closed to all transiting vessels until the Captain of the Port Honolulu lifts the evacuation order. All other applicable regulations in 33 CFR 165 remain in effect and subject to enforcement. You may contact the Coast Guard on VHF Channel 16 (156.800 MHz) or at telephone number 808–842–2600 to obtain clarification on safety zone transits and locations. Coast Guard patrol boats will be enforcing the safety zones and providing on-scene direction. Any vessel not capable of evacuating must contact the Coast Guard Sector Command Center at (808) 842–2601 to request a waiver from evacuating the harbor.

(c) *Enforcement period.* Paragraph (b) of this section will be enforced when a tsunami warning has been issued for the Hawaiian Islands. The COTP will notify the public of any enforcement through the following means to ensure the widest publicity: Broadcast notice to mariners, notices of enforcement, press releases and the Coast Guard's Homeport Web site. Following the passage of the tsunami or tsunami threat and harbor assessments as required, deactivation of these safety zones will be conducted through radio broadcast by the U.S. Coast Guard.

(d) *Penalties.* Vessels or persons violating this rule would be subject to the penalties set forth in 33 U.S.C. 1232.

[USCG–2013–0021, 78 FR 63383, Oct. 24, 2013]

§ 165.1401 Apra Harbor, Guam—safety zones.

(a) The following is designated as Safety Zone A—The waters of the Pacific Ocean and Apra Outer Harbor encompassed within an arc of 725 yards radius centered at the center of Wharf H. (Located at 13°27′47″ N and 144°39′01.9″ E. Based on World Geodetic System 1984 Datum)

(b) The following is designated Safety Zone B—The waters of Apra Outer Harbor encompassed within an arc of 680 yards radius centered at the center of Naval Wharf Kilo. (Located at 13°26′43″ N, 144°37′46.7″ E. Based on World Geodetic system 1984 Datum)

(c) *Special regulations.* (1) Section 165.23 does not apply to Safety Zone A and/or Safety Zone B, except when Wharf H and/or Naval Wharf Kilo, or a vessel berthed at Wharf H and/or Naval Wharf Kilo, is displaying a red (BRAVO) flag by day or a red light by night.

(2) In accordance with the general regulations in 165.23 of this part, entry into these zones is prohibited unless authorized by the Captain of the Port, Guam.

[COTP Guam Reg. 89–001, 55 FR 18725, May 4, 1990]

§ 165.1402 Apra Outer Harbor, Guam—regulated navigation area.

(a) The following is a regulated navigation area—The waters of the Pacific Ocean and Apra Outer Harbor enclosed by a line beginning at latitude 13°26′47″ N, longitude 144°35′07″ E; thence to Spanish Rocks at latitude 13°27′09.5″ N, longitude 144°37′20.6″ E; thence along the shoreline of Apra Outer Harbor to latitude 13°26′28.1″ N, longitude 144°39′52.5″ E (the northwest corner of

Polaris Point); thence to latitude 13°26′40.2″ N, longitude 144°39′28.1″ E; thence to latitude 13°26′32.1″ N, longitude 144°39′02.8″ E; thence along the shoreline of Apra Outer Harbor to Orote Point at latitude 13°26′42″ N, longitude 144°36′58.5″ E; thence to the beginning. (Based on WGS 84 Datum)

(b) Regulations:

(1) Except for public vessels of the United States, vessels may not enter Apra Outer Harbor without permission of the Captain of the Port if they have on board more than 25 tons of high explosives.

(2) Except for vessels not more than 65 feet in length, towboats or tugs without tows, no vessel may pass another vessel in the vicinity of the Outer Harbor entrance.

(3) Vessels over 100 gross tons shall:

(i) Steady on the entrance range at least 2 miles west of the entrance when approaching Apra Outer Harbor and;

(ii) [Reserved]

(iii) Steady on the range when departing Apra Outer Harbor.

(4) Vessels may not anchor in the fairway. The fairway is the area within 375 feet on either side of a line beginning at latitude 13°26′47″ N, longitude 144°35′07″ E; thence to latitude 13°27′14.1″ N, longitude 144°39′14.4″ E; thence to latitude 13°26′35.2″ N, longitude 144°39′46.4″ E; thence to latitude 13°26′30.8″ N, longitude 144°39′44.4″ E. (Based on WGS 84 Datum)

(5) Vessels over 100 gross tons may not proceed at a speed exceeding 12 knots within the harbor.

(6) No vessel may leave Apra Outer Harbor until any inbound vessel over 65 feet in length has cleared the Outer Harbor Entrance.

[CGD 79–034, 47 FR 29660, July 8, 1982, as amended by CGD 96–026, 61 FR 33669, June 28, 1996; USCG–1998–3799, 63 FR 35533, June 30, 1998]

§ 165.1403 Security Zones; Tinian, Commonwealth of the Northern Mariana Islands.

(a) *Location*. The following areas are security zones:

(1) The waters of the Pacific Ocean off Tinian between 14°59′04.9″ N, 145°34′58.6″ E to 14°59′20.1″ N, 145°35′41.5″ E to 14°59′09.8″ N, 145°36′02.1″ E to 14°57′49.3″ N, 145°36′28.7″ E to 14°57′29.1″ N, 145°35′31.1″ E and back to 14°59′04.9″ N, 145°34′58.6″ E. This zone will be enforced when one, or more, of the Maritime Preposition Ships is in the zone or moored at Mooring A located at 14°58′57.0″ N and 145°35′40.8″ E or Mooring B located at 14°58′15.9″ N, 145°35′54.8″ E.

(2) Additionally, a 50-yard security zone in all directions around Moorings A and B will be enforced when no vessels are moored thereto but mooring balls are anchored and on station.

NOTE TO § 165.1403(a): All positions of latitude and longitude are from International Spheroid, Astro Pier 1944 (Saipan) Datum (NOAA Chart 81071).

(b) *Regulations*. (1) In accordance with general regulations in § 165.33 of this part, entry into this security zone is prohibited unless authorized by the Captain of the Port.

[COTP Honolulu Reg. 86–08, 51 FR 42220, Nov. 24, 1986, as amended by USCG–2001–9286, 66 FR 33642, June 25, 2001; COTP Guam 07–005, 72 FR 65460, Nov. 21, 2007]

§ 165.1404 Apra Harbor, Guam—security zone.

(a) The following is designated as Security Zone C—The waters of Apra Outer Harbor, Guam surrounding Naval Mooring Buoy No. 702 (Located at 13°27′30.1″ N and 144°38′12.9″ E. Based on World Geodetic System 1984 Datum) and the Maritime Prepositioning ships moored thereto. The security zone will extend 100 yards in all directions around the vessel and its mooring. Additionally, a 50 yard security zone will remain in effect in all directions around buoy No. 702 when no vessel is moored thereto.

(b) In accordance with the general regulations in § 165.33 of this part, entry into Security Zone C is prohibited unless authorized by the Captain of the Port, Guam.

[COTP Guam Reg. 89–001, 55 FR 18725, May 4, 1990]

§ 165.1405 Regulated Navigation Areas and Security Zones; Designated Escorted Vessels-Philippine Sea and Apra Harbor, Guam (including Cabras Island Channel), and Tanapag Harbor, Saipan, Commonwealth of the Northern Mariana Islands (CNMI).

(a) *Regulated navigation area.* The following areas, designated by coordinates referencing World Geodetic Datum (1984), are regulated navigation areas (RNAs).

(1) *Philippine Sea, Guam*—All waters from the surface to the bottom of the Philippine Sea, Guam, encompassed by lines connecting the following points, beginning at 13°27′10″ N, 144°35′05″ E, thence easterly to 13°27′17″ N, 144°37′27″ E, thence south westerly to 13°26′52″ N, 144°37′05″ E, thence westerly to 13°26′37″ N, 144°35′05″ E, thence due north back to point of origin.

(2) *Apra Harbor, Guam*—All waters from surface to bottom of Apra Harbor, Guam, shoreward of the COLREGS Demarcation as described in 33 CFR part 80.

(3) *Tanapag Harbor, Saipan*—The waters from surface to bottom of Tanapag Harbor, Saipan (CNMI), encompassed by lines connecting the following points, beginning at 15°12′10″ N, 145°40′28″ E, thence north easterly to 15°14′08″ N, 145°42′00″ E, thence due east to 15°14′08″ N, 145°44′02″ E, thence south easterly to 15°13′54″ N, 144°44′20″ E, thence south westerly along the shoreline to 15°13′11″ N, 145°43′01″ E, thence south westerly to 15°12′10″ N, 145°40′28″ E.

(4) *Cabras Island Channel, Guam*—All waters from surface to bottom of Cabras Island Channel, Guam, beginning at point 13°27′34″ N, 144°39′39″ E and extending south easterly to position 13°27′24″ N, 144°39′59″ E then heading easterly along the shoreline to position 13°27′31″ N, 144°40′22″ E then heading north to position 13°27′37″ N, 144°40′22″ E following the shoreline in a westerly direction back to point of origin.

(b) *Security zones.* A 100-yard radius security zone is established around, and is centered on, each escorted vessel within the regulated navigation areas in paragraph (a) of this section. A security zone is activated when an escorted vessel enters an RNA and remains active until the escorted vessel leaves the RNA. This is a moving security zone when the escorted vessel is in transit and becomes a fixed zone when the escorted vessel is anchored or moored. A security zone will not extend beyond the boundary of the RNA in this section.

(c) *Definitions.* As used in this section:

(1) *Designated representative* means any Coast Guard commissioned, warrant, or petty officer that has been authorized to act on behalf of the COTP.

(2) *Escorted Vessel* means any vessel operating in the RNA deemed by the COTP to be in need of escort protection for security reasons or under other circumstances. A designated representative aboard a Coast Guard cutter or patrol boat will accompany vessels deemed in need of escort protection into the RNA.

(3) *Navigation rules* mean international and inland navigation rules in 33 CFR chapter I, subchapters D and E.

(4) *Vessel* means every description of watercraft or other artificial contrivance used, or capable of being used, as a means of transportation on water, except U.S. Coast Guard or U.S. naval vessels.

(d) *Regulations.* (1) No person or vessel may enter into the security zones under this section unless authorized by the COTP Guam or a designated representative.

(2) A vessel in the RNA established under paragraph (a) of this section operating within 500 yards of an escorted vessel must proceed at a minimum speed necessary to maintain a safe course, unless required to maintain speed by the navigation rules.

(3) When an escorted vessel in the RNA approaches within 100 yards of a vessel that is moored, or anchored in a designated anchorage area, the stationary vessel must stay moored or anchored while it remains within the escorted vessel's security zone unless it is either ordered by, or given permission from the COTP Guam or a designated representative to do otherwise.

(4) The COTP will inform the public of the existence or status of the security zones around escorted vessels in the RNA periodically by Broadcast Notice to Mariners.

(5) Persons or vessels that must enter a security zone or exceed speed limits established in this section may contact the COTP at command center telephone number (671) 339–6100 or on VHF channel 16 (156.8 Mhz) to request permission.

(6) All persons and vessels within 500 yards of an escorted vessel in the RNA must comply with the orders of the COTP Guam or his designated representatives.

(e) *Authority*. In addition to 33 U.S.C. 1231 and 50 U.S.C. 191, the authority for this section includes 33 U.S.C. 1226.

[CGD14–02–002, 68 FR 4384, Jan. 29, 2003]

§ 165.1406 Safety Zone: Pacific Missile Range Facility (PMRF), Barking Sands, Island of Kauai, Hawaii.

(a) *Location*. The following area is established as a safety zone during launch operations at PMRF, Kauai, Hawaii: The waters bounded by the following coordinates: (22°01.2′ N, 159°47.3′ W), (22°01.2′ N, 159°50.7′ W), (22°06.3′ N, 159°50.7′ W), (22°06.3′ N, 159°44.8′ W). (Datum: OHD)

(b) *Activation*. The above safety zone will be activated during launch operations at PMRF, Kauai, Hawaii. The Coast Guard will provide notice that the safety zone will be activated through published and broadcast local notice to mariners prior to scheduled launch dates.

(c) *Regulation*. The area described in paragraph (a) of this section will be closed to all vessels and persons, except those vessels and persons authorized by the Commander, Fourteenth Coast Guard District, or the Captain of the Port (COTP) Honolulu, Hawaii, whenever Strategic Target System (STARS) vehicles are to be launched by the United States Government from the PMRF, Barking Sands, Kauai, Hawaii.

(d) The general regulations governing safety zones contained in 33 CFR 165.23 apply.

[CGD14 92–05, 57 FR 54508, Nov. 19, 1992, as amended by CGD 96–026, 61 FR 33669, June 28, 1996]

§ 165.1407 Security Zones; Oahu, HI.

(a) *Location*. The following areas, from the surface of the water to the ocean floor, are security zones that are activated and enforced subject to the provisions of paragraphs (c) and (d). All coordinates below are expressed in degrees, minutes, and tenths or hundredths of minutes.

(1) *Honolulu Harbor*. All waters of Honolulu Harbor and Honolulu entrance channel commencing at a line between entrance channel buoys no. 1 and no. 2, to a line between the fixed day beacons no. 14 and no. 15 west of Sand Island Bridge.

(2) *Honolulu Harbor Anchorages B, C, and D*. All waters extending 100 yards in all directions from each vessel in excess of 300 gross tons anchored in Honolulu Harbor Anchorage B, C, or D, as defined in 33 CFR 110.235(a).

(3) *Kalihi Channel and Keehi Lagoon, Oahu*. All waters of Kalihi Channel and Keehi Lagoon beginning at Kalihi Channel entrance buoy no. 1 and continuing along the general trend of Kalihi Channel to day beacon no. 13, thence continuing on a bearing of 332.5°T to shore, thence east and south along the general trend of the shoreline to day beacon no. 15, thence southeast to day beacon no. 14, thence southeast along the general trend of the shoreline of Sand Island, to the southwest tip of Sand Island at 21°18.0′ N/157°53.05′ W, thence southwest on a bearing of 233°T to Kalihi Channel entrance buoy no. 1.

(4) *Honolulu International Airport*—(i) *Honolulu International Airport, North Section*. All waters surrounding Honolulu International Airport from 21°18.25′ N/157°55.58°W, thence south to 21°18.0′ N/157°55.58′ W, thence east to the western edge of Kalihi Channel, thence north along the western edge of the channel to day beacon no. 13, thence northwest at a bearing of 332.5°T to shore.

(ii) *Honolulu International Airport, South Section*. All waters near Honolulu International Airport from 21°18.0′ N/157°55.58′ W, thence south to 21°16.5′ N/157°55.58′ W, thence east to 21°16.5′ N/157°54.0′ W (the extension of the western edge of Kalihi Channel), thence north along the western edge of the channel to Kalihi Channel buoy ''5'', thence west to 21°18.0′ N/157°55.58′ W.

(5) *Barbers Point Offshore Moorings*. All waters around the Tesoro Single Point and the Chevron Conventional Buoy Moorings beginning at 21°16.43′ N/158°06.03′ W, thence northeast to

21°17.35′ N/158°3.95′ W, thence southeast to 21°16.47′ N/ 158°03.5′ W, thence southwest to 21°15.53′ N/158°05.56′ W, thence north to the beginning point.

(6) *Barbers Point Harbor, Oahu.* All waters contained within the Barbers Point Harbor, Oahu, enclosed by a line drawn between Harbor Entrance Channel Light 6 and the jetty point day beacon at 21°19.5′ N/158°07.26′ W.

(7) *Kahe Point, Oahu.* All waters adjacent to the Hawaiian Electric Company power plant at Kahe Point within 500 yards of 21°21.30' N/158′ 07.7°W (lighted tower).

(b) *Definitions.* As used in this section, *MARSEC Level 2 or Maritime Security Level 2* means, as defined in 33 CFR 101.105, the level for which appropriate additional protective security measures shall be maintained for a period of time as a result of heightened risk of a transportation security incident.

(c) *Regulations.* (1) Under 33 CFR 165.33, entry into the security zones described in this section is prohibited unless authorized by the Coast Guard Captain of the Port, Honolulu or his or her designated representatives.

(2) Persons desiring to transit the areas of the security zones may contact the Captain of the Port at Command Center telephone number (808) 842–2600 and (808) 842–2601, fax (808) 842–2624 or on VHF channel 16 (156.8 Mhz) to seek permission to transit the area. Written requests may be submitted to the Captain of Port, U.S. Coast Guard Sector Honolulu, Sand Island Access Road, Honolulu, Hawaii 96819, or faxed to (808) 842–2622. If permission is granted, all persons and vessels must comply with the instructions of the Captain of the Port or his or her designated representatives. For all seaplane traffic entering or transiting the security zones, a seaplane's compliance with all Federal Aviation Administration regulations (14 CFR parts 91 and 99) regarding flight-plan approval is deemed adequate permission to transit the waterway security zones described in this section.

(d) *Notice of enforcement or suspension of enforcement of security zones.* (1) The security zones described in paragraphs (a)(3) (Kalihi Channel and Keehi Lagoon, Oahu), (a)(4)(i) (Honolulu International Airport, North Section), (a)(4)(ii) (Honolulu International Airport, South Section), (a)(6) (Barbers Point Harbor, Oahu), and (a)(7) (Kahe Point, Oahu) of this section, will be enforced only upon the occurrence of one of the following events—

(i) Whenever the Maritime Security (MARSEC) level, as defined in 33 CFR part 101, is raised to 2 or higher; or

(ii) Whenever the Captain of the Port, after considering all available facts, determines that there is a heightened risk of a transportation security incident or other serious maritime incident, including but not limited to any incident that may cause a significant loss of life, environmental damage, transportation system disruption, or economic disruption in a particular area.

(2) A notice will be published in the FEDERAL REGISTER reporting when events in paragraph (d)(1)(i) or (d)(1)(ii) have occurred.

(3) The Captain of the Port of Honolulu will cause notice of the enforcement of the security zones listed in paragraph (d)(1) of this section and notice of suspension of enforcement to be made by appropriate means to affect the widest publicity, including the use of broadcast notice to mariners and publication in the local notice to mariners.

(e) *Informational notices.* The Captain of the Port will cause notice of the presence of the security zones established in paragraph (a)(2) of this section, Honolulu Harbor Anchorages B, C, and D, to be made by appropriate means to affect the widest publicity, including the use of broadcast notice to mariners and publication in the local notice to mariners.

(f) *Enforcement.* Any Coast Guard commissioned, warrant, or petty officer, and any other Captain of the Port representative permitted by law, may enforce the rules in this section.

(g) *Waiver.* The Captain of the Port, Honolulu may waive any of the requirements of this section for any vessel or class of vessels upon his or her determination that application of this section is unnecessary or impractical for the purpose of port and maritime security.

(h) *Penalties.* Vessels or persons violating this section are subject to the

penalties set forth in 33 U.S.C. 1232 and 50 U.S.C. 192.

[CGD14–04–116, 70 FR 75040, Dec. 19, 2005, as amended by CGD 14–07–001, 72 FR 44777, Aug. 9, 2007; 72 FR 57863, Oct. 11, 2007; USCG–2009–0416, 74 FR 27442, June 10, 2009]

§ 165.1408 Security Zones; Maui, HI.

(a) *Location*. The following areas, from the surface of the water to the ocean floor, are security zones that are activated and enforced subject to the provisions in paragraph (c):

(1) *Kahului Harbor, Maui*. All waters extending 100 yards in all directions from each large passenger vessel in Kahului Harbor, Maui, HI or within 3 nautical miles seaward of the Kahului Harbor COLREGS DEMARCATION (See 33 CFR 80.1460). This is a moving security zone when the LPV is in transit and becomes a fixed zone when the LPV is anchored, position-keeping, or moored.

(2) *Lahaina, Maui*. All waters extending 100 yards in all directions from each large passenger vessel in Lahaina, Maui, whenever the LPV is within 3 nautical miles of Lahaina Light (LLNR 28460). The security zone around each LPV is activated and enforced whether the LPV is underway, moored, position-keeping, or anchored, and will continue in effect until such time as the LPV departs Lahaina and the 3-mile enforcement area.

(b) *Definitions*. As used in this section, *large passenger vessel* or *LPV* means a cruise ship more than 300 feet in length that carries passengers for hire, and any passenger ferry more than 300 feet in length that carries passengers for hire.

(c) *Regulations*. (1) Under 33 CFR 165.33, entry into the security zones created by this section is prohibited unless authorized by the Coast Guard Captain of the Port, Honolulu or his or her designated representatives. When authorized passage through a large passenger vessel security zone, all vessels must operate at the minimum speed necessary to maintain a safe course and must proceed as directed by the Captain of the Port or his or her designated representatives. No person is allowed within 100 yards of an LPV that is underway, moored, position-keeping, or at anchor, unless authorized by the Captain of the Port or his or her designated representative.

(2) When conditions permit, the Captain of the Port, or his or her designated representative, may permit vessels that are at anchor, restricted in their ability to maneuver, or constrained by draft to remain within an LPV security zone in order to ensure navigational safety.

(3) Persons desiring to transit the areas of the security zones in this section may contact the Captain of the Port at Command Center telephone number (808) 842–2600 or on VHF channel 16 (156.8 Mhz) to seek permission to transit the area. Written requests may be submitted to the Captain of Port, U.S. Coast Guard Sector Honolulu, Sand Island Access Road, Honolulu, Hawaii 96819, or faxed to (808) 842–2622. If permission is granted, all persons and vessels must comply with the instructions of the Captain of the Port or his or her designated representatives. For all seaplane traffic entering or transiting the security zones, compliance with all Federal Aviation Administration regulations (14 CFR parts 91 and 99) regarding flight-plan approval is deemed adequate permission to transit the waterway security zones described in this section.

(d) *Enforcement*. Any Coast Guard commissioned, warrant, or petty officer, and any other Captain of the Port representative permitted by law, may enforce the rules in this section.

(e) *Waiver*. The Captain of the Port, Honolulu may waive any of the requirements of this section for any vessel or class of vessels upon his or her determination that application of this section is unnecessary or impractical for the purpose of port and maritime security.

(f) *Penalties*. Vessels or persons violating this section are subject to the penalties set forth in 33 U.S.C. 1232 and 50 U.S.C. 192.

[CGD14–04–116, 70 FR 75040, Dec. 19, 2005, as amended by CGD 14–07–001, 72 FR 44777, Aug. 9, 2007]

§ 165.1409 Security Zones; Hawaii, HI.

(a) *Location*. The following areas, from the surface of the water to the ocean floor, are security zones that are

activated and enforced subject to the provisions in paragraph (c):

(1) *Hilo Harbor, Hawaii.* All waters extending 100 yards in all directions from each large passenger vessel in Hilo Harbor, Hawaii, HI or within 3 nautical miles seaward of the Hilo Harbor COLREGS DEMARCATION (See 33 CFR 80.1480). This is a moving security zone when the LPV is in transit and becomes a fixed zone when the LPV is anchored, position-keeping, or moored.

(2) *Kailua-Kona,* Hawaii. All waters extending 100 yards in all directions from each large passenger vessel in Kailua-Kona, Hawaii, whenever the LPV is within 3 nautical miles of Kukailimoku Point. The 100-yard security zone around each LPV is activated and enforced whether the LPV is underway, moored, position-keeping, or anchored and will continue in effect until such time as the LPV departs Kailua-Kona and the 3-mile enforcement area.

(3) *Kawaihae Harbor, Hawaii.* All waters extending 100 yards in all directions from each large passenger vessel in Kawaihae Harbor, Hawaii, or within 3 nautical miles seaward of the Kawaihae Harbor COLREGS DEMARCATION (See 33 CFR 80.1470). The 100-yard security zone around each LPV is activated and enforced whether the LPV is underway, moored, position-keeping, or anchored.

(b) *Definitions.* As used in this section, *large passenger vessel* or *LPV* means a cruise ship more than 300 feet in length that carries passengers for hire, and any passenger ferry more than 300 feet in length that carries passengers for hire.

(c) *Regulations.* (1) Under 33 CFR 165.33, entry into the security zones created by this section is prohibited unless authorized by the Coast Guard Captain of the Port, Honolulu or his or her designated representative. When authorized passage through a large passenger vessel security zone, all vessels must operate at the minimum speed necessary to maintain a safe course and must proceed as directed by the Captain of the Port or his or her designated representatives. No person is allowed within 100 yards of a large passenger vessel that is underway, moored, position-keeping, or at anchor, unless authorized by the Captain of the Port or his or her designated representatives.

(2) When conditions permit, the Captain of the Port, or his or her designated representatives, may permit vessels that are at anchor, restricted in their ability to maneuver, or constrained by draft to remain within an LPV security zone in order to ensure navigational safety.

(3) Persons desiring to transit the areas of the security zones in this section may contact the Captain of the Port at Command Center telephone number (808) 842–2600 or on VHF channel 16 (156.8 Mhz) to seek permission to transit the area. Written requests may be submitted to the Captain of Port, U.S. Coast Guard Sector Honolulu, Sand Island Access Road, Honolulu, Hawaii 96819, or faxed to (808) 842–2622. If permission is granted, all persons and vessels must comply with the instructions of the Captain of the Port or his or her designated representatives. For all seaplane traffic entering or transiting the security zones, compliance with all Federal Aviation Administration regulations (14 CFR parts 91 and 99) regarding flight-plan approval is deemed adequate permission to transit the waterway security zones described in this section.

(d) *Enforcement.* Any Coast Guard commissioned, warrant, or petty officer, and any other Captain of the Port representative permitted by law, may enforce the rules in this section.

(e) *Waiver.* The Captain of the Port, Honolulu may waive any of the requirements of this section for any vessel or class of vessels upon his or her determination that application of this section is unnecessary or impractical for the purpose of port and maritime security.

(f) *Penalties.* Vessels or persons violating this section are subject to the penalties set forth in 33 U.S.C. 1232 and 50 U.S.C. 192.

[CGD14–04–116, 70 FR 75041, Dec. 19, 2005, as amended by CGD14–07–001, 72 FR 44777, Aug. 9, 2007]

§ 165.1410 Security Zones; Kauai, HI.

(a) *Location.* The following areas, from the surface of the water to the ocean floor, are security zones that are

activated and enforced subject to the provisions in paragraph (c):

(1) *Nawiliwili Harbor, Lihue, Kauai.* All waters extending 100 yards in all directions from each large passenger vessel in Nawiliwili Harbor, Kauai, HI or within 3 nautical miles seaward of the Nawiliwili Harbor COLREGS DEMARCATION (See 33 CFR 80.1450). This is a moving security zone when the LPV is in transit and becomes a fixed zone when the LPV is anchored, position-keeping, or moored.

(2) *Port Allen, Kauai.* All waters extending 100 yards in all directions from each large passenger vessel in Port Allen, Kauai, HI or within 3 nautical miles seaward of the Port Allen COLREGS DEMARCATION (See 33 CFR 80.1440). This is a moving security zone when the LPV is in transit and becomes a fixed zone when the LPV is anchored, position-keeping, or moored.

(b) *Definitions.* As used in this section, *large passenger vessel* or *LPV* means a cruise ship more than 300 feet in length that carries passengers for hire, and any passenger ferry more than 300 feet in length that carries passengers for hire.

(c) *Regulations.* (1) Under 33 CFR 165.33, entry into the security zones created by this section is prohibited unless authorized by the Coast Guard Captain of the Port, Honolulu or his or her designated representative. When authorized passage through an LPV security zone, all vessels must operate at the minimum speed necessary to maintain a safe course and must proceed as directed by the Captain of the Port or his or her designated representative. No person is allowed within 100 yards of a large passenger vessel that is underway, moored, position-keeping, or at anchor, unless authorized by the Captain of the Port or his or her designated representative.

(2) When conditions permit, the Captain of the Port, or his or her designated representative, may permit vessels that are at anchor, restricted in their ability to maneuver, or constrained by draft to remain within an LPV security zone in order to ensure navigational safety.

(3) Persons desiring to transit the areas of the security zones may contact the Captain of the Port at Command Center telephone number (808) 842–2600 or on VHF channel 16 (156.8 Mhz) to seek permission to transit the area. Written requests may be submitted to the Captain of Port, U.S. Coast Guard Sector Honolulu, Sand Island Access Road, Honolulu, Hawaii 96819, or faxed to (808) 842–2622. If permission is granted, all persons and vessels must comply with the instructions of the Captain of the Port or his or her designated representatives. For all seaplane traffic entering or transiting the security zones, compliance with all Federal Aviation Administration regulations (14 CFR parts 91 and 99) regarding flight-plan approval is deemed adequate permission to transit the waterway security zones described in this section.

(d) *Enforcement.* Any Coast Guard commissioned, warrant, or petty officer, and any other Captain of the Port representative permitted by law, may enforce the rules in this section.

(e) *Waiver.* The Captain of the Port, Honolulu may waive any of the requirements of this section for any vessel or class of vessels upon his or her determination that application of this section is unnecessary or impractical for the purpose of port and maritime security.

(f) *Penalties.* Vessels or persons violating this section are subject to the penalties set forth in 33 U.S.C. 1232 and 50 U.S.C. 192.

[CGD14–04–116, 70 FR 75041, Dec. 19, 2005, as amended by CGD14–07–001, 72 FR 44778, Aug. 9, 2007]

§ 165.1411 Security zone; waters surrounding U.S. Forces vessel SBX–1, HI.

(a) *Location.* The following area, in U.S. navigable waters within the Honolulu Captain of the Port Zone (see 33 CFR 3.70–10), from the surface of the water to the ocean floor, is a security zone: All waters extending 500 yards in all directions from U.S. Forces vessel SBX–1. The security zone moves with the SBX–1 while it is in transit and becomes fixed when the SBX–1 is anchored, position-keeping, or moored.

(b) *Regulations.* The general regulations governing security zones contained in 33 CFR 165.33 apply. Entry into, transit through, or anchoring

within this zone while it is activated, and thus subject to enforcement, is prohibited unless authorized by the Captain of the Port or a designated representative thereof.

(c) *Suspension of enforcement*. The Coast Guard will suspend enforcement of the security zone described in this section whenever the SBX–1 is within the Honolulu Defensive Sea Area (see 6 FR 6675).

(d) *Informational notice*. The Captain of the Port of Honolulu will cause notice of the enforcement of the security zone described in this section to be made by broadcast notice to mariners. The SBX–1 is easy to recognize because it contains a large white object shaped like an egg supported by a platform that is larger than a football field. The platform in turn is supported by six pillars similar to those on large oil-drilling platforms.

(e) *Authority to enforce*. Any Coast Guard commissioned, warrant, or petty officer, and any other Captain of the Port representative permitted by law, may enforce the security zone described in this section.

(f) *Waiver*. The Captain of the Port may waive any of the requirements of this rule for any person, vessel, or class of vessel upon finding that application of the security zone is unnecessary or impractical for the purpose of maritime security.

(g) *Penalties*. Vessels or persons violating this rule are subject to the penalties set forth in 33 U.S.C. 1232 and 50 U.S.C. 192.

[USCG–2007–0195, 73 FR 13131, Mar. 12, 2008]

§ 165.1412 Security Zone; escorted U.S. Navy submarines in Sector Honolulu Captain of the Port Zone.

(a) *Location*. The following area is a security zone: all waters, from the surface to the ocean floor, within 1,000 yards of any U.S. Navy submarine that is

(1) Operating in the Sector Honolulu Captain of the Port Zone, as defined in 33 CFR 3.70–10, and that

(2) Is being escorted by the U.S. Coast Guard.

(b) *Regulations*. In accordance with the general regulations in 33 CFR 165, Subpart D, no person or vessel may enter or remain in the security zone created by paragraph (a) of this section unless authorized by the Coast Guard patrol commander. The Coast Guard patrol commander may be contacted via VHF Channel 16 or other means reasonably available. 33 CFR part 165.30 and 165.33 contain additional provisions applicable to the security zone created in paragraph (a) of this section.

(c) *Effective period*. This rule is effective from 6:00 a.m. on June 12, 2010 Hawaiian Standard Time (HST).

(d) *Notification*. The Coast Guard security escort will attempt, when necessary and practicable, to notify any persons or vessels inside or in the vicinity of the security one created in paragraph (a) of this section of the zone's existence via VHF Channel 16 or other means reasonably available.

(e) *Penalties*. Vessels or persons violating this rule are subject to the penalties set forth in 33 U.S.C. 1232 and 50 U.S.C. 192.

[USCG–2010–0409, 75 FR 33704, June 15, 2010]

§ 165.1413 Regulated navigation area; Southern Oahu Tsunami Evacuation; Honolulu, Hawaii.

(a) *Location*. The following area is a regulated navigation area (RNA): All waters of the Pacific Ocean south of the southern side of Oahu, HI extending from the surface of the water to the ocean floor, and is bound by a line connecting the following points: 21°17′14″ N, 157°55′34″ W; 21°13′30″ N, 157°55′34″ W; 21°13′30″ N, 157°48′20″ W; 21°14′14″ N, 157°48′20″ W thence westward along the 50-fathom line to the beginning point. These coordinates are based upon the National Oceanic and Atmospheric Administration Coast Survey, Pacific Ocean, Oahu, Hawaii, chart 19357.

(b) *Regulations*. You may contact the Coast Guard on VHF Channel 16 (156.800 MHz) or at telephone number 808–842–2600, to obtain clarification on RNA transits and locations. Operations permitting, the Coast Guard plans to provide on-scene direction using Coast Guard patrol boats and assets. During the enforcement period persons and vessels wishing to remain inside the RNA must abide by the following stipulations:

(1) No person or vessel may enter into an exclusionary area 3.7 nautical

miles long by 1 nautical mile wide, centered lengthwise and along a line running seaward at 208 degrees southwest of Honolulu Harbor Front Range Light, except to transit to or from the staging areas or other areas outside the zone. Loitering or lingering in the exclusionary zone is prohibited.

(2) The Western Recreational Vessel Staging area is bound by the following points: 21°17′14″ N, 157°55′34″ W; 21°13′30″ N, 157°55′34″ W; 21°13′30″ N, 157°55′17″ W; 21°16′46″ N, 157°53′23″ W and then along the 50-fathom line to the beginning point. This staging area is intended for recreational vessels departing from and returning to the Keehi Lagoon area.

(3) The Commercial Vessel Staging Area is bound by a line connecting the following points: 21°16′48″ N, 157°52′10″ W; 21°13′30″ N, 157°54′05″ W; 21°13′30″ N, 157°51′36″ W; 21°15′55″ N, 157°50′58″ W and then along the 50-fathom line to the beginning point. This staging area is intended for use by all commercial vessels intended to remain in the RNA during a tsunami treat.

(4) The Eastern Recreational Vessel Staging Area is bound by the following points: 21°15′55″ N, 157°50′58″ W; 21°13′30″ N, 157°51′36″ W; 21°13′30″ N, 157°48′20″ W; 21°14′14″ N, 157°48′20″ W and then along the 50-fathom line to the beginning point. The Commercial Vessel Staging Area borders this staging area's western edge. The dividing line between the Commercial Vessel Staging Area and the Eastern Recreational Vessel Staging Area can be determined visually. The private dayboards located in the Ala Wai Small Boat Harbor and the La Ronde Rotating Restaurant roof top restaurant form a natural range that mariners can use in daylight hours to gauge the eastern boundary of the Commercial Vessel Staging Area and the western boundary of the Eastern Recreational Vessel Staging Area. This eastern recreational staging area is intended for use by recreational vessels departing from and returning to the Ala Wai Small Boat harbor and Kewalo Basin.

(5) Located between the Western Recreational Vessel Staging Area and the Commercial Vessel Staging Area is an Exclusion Area. This area is bound by the following points: 21°16′46″ N, 157°53′23″ W; 21°13′30″ N, 157°55′17″ W; 21°13′30″ N, 157°54′05″ W; 21°16′48″ N, 157°52′10″ W and then along the 50-fathom line to the beginning point.

(6) All vessels staging in the RNA must be seaward of the 50-fathom (300 foot) line.

(c) *Enforcement period.* Paragraph (b) of this section will be enforced when a tsunami warning has been issued for the Hawaiian Islands by the Pacific Tsunami Warning Center. The COTP will notify the public of any enforcement, suspension of enforcement, or termination of enforcement through appropriate means to ensure the widest publicity, including the use of broadcast notice to mariners, notices of enforcement and press releases.

(d) *Penalties.* Vessels or persons violating this rule are subject to the penalties set forth in 33 U.S.C. 1232.

[USCG–2012–0080, 79 FR 13324, Feb. 28, 2014]

SEVENTEENTH COAST GUARD DISTRICT

§ 165.1701 Port Valdez, Valdez, Alaska—safety zone.

The waters within the following boundaries are a safety zone—The area within 200 yards of any waterfront facility at the Trans-Alaska Pipeline Valdez Terminal complex or vessels moored or anchored at the Trans-Alaska Pipeline Valdez Terminal complex and the area within 200 yards of any tank vessel maneuvering to approach, moor, unmoor, or depart the Trans-Alaska Pipeline Valdez Terminal complex.

§ 165.1702 Gastineau Channel, Juneau, Alaska—safety zone.

(a) The waters within the following boundaries are a safety zone: A line beginning at the Standard Oil Company Pier West Light (LLNR 3217), located at position 58°17.9′ N, 134°24.8′ W, in the direction of 140° True to Rock Dump Lighted Buoy 2A (LLNR 3213) at position 58°17.2′ N, 134°23.8′ W; thence in the direction of 003° True to a point at position 58°17.4′ N, 134°23.7′ W, on the north shore of Gastineau Channel; thence northwesterly along the north shore of Gastineau Channel to the point of origin.

(b) Special Regulations:

(1) All vessels may transit or navigate within the safety zone.

(2) No vessels, other than a large passenger vessel (including cruise ships and ferries) may anchor within the Safety zone without the express consent from the Captain of the Port, Southeast Alaska.

[CGD 79–034, 47 FR 29660, July 8, 1982, as amended by CGD 79–026, 48 FR 35408, Aug. 4, 1983]

§ 165.1703 Ammunition Island, Port Valdez, Alaska.

(a) *Location*. The waters within the following boundaries is a safety zone—the area within a radius of 1330 yards of Ammunition Island, centered on latitude 61°07′28″ N, longitude 146°18′29″ W, (NAD 83) and the vessel moored or anchored at Ammunition Island.

(b) The area 200 yards off the vessel navigating the Vessel Traffic system from abeam of Naked Island, maneuvering to approach, moor, unmoor at Ammunition Island, or the departure of the vessel from Ammunition Island.

(c) *Special regulation*. (1) Section 165.23 does not apply to paragraph (a) of this section, except when the vessel is moored to Ammunition Island.

(d) Effective August 25, 1987 Notice of vessels arrival will be made in the Notice to Mariners, Local Notice to Mariners and in the Local Valdez newspaper, prior to the vessel arrival.

[52 FR 30671, Aug. 17, 1987, as amended by USCG–1998–3799, 63 FR 35533, June 30, 1998; COTP Prince William Sound 02–010, 67 FR 45313, July 9, 2002]

§ 165.1704 Prince William Sound, Alaska-regulated navigation area.

(a) The following is a regulated navigation area: The navigable waters of the United States north of a line drawn from Cape Hinchinbrook Light to Schooner Rock Light, comprising that portion of Prince William Sound between 146°30′ W. and 147°20′ W. and includes Valdez Arm, Valdez Narrows, and Port Valdez.

(b) Within the regulated navigation area described in paragraph (a) of this section, § 161.60 of this chapter establishes a VTS Special Area for the waters of Valdez Arm, Valdez Narrows, and Port Valdez northeast of a line bearing 307° True from Tongue Point at 61°02′06″ N., 146°40′ W.; and southwest of a line bearing 307° True from Entrance Island Light at 61°05′06″ N., 146°36′42″ W.

(c) *Regulations*. In addition to the requirements set forth in § 161.13 and § 161.60(c) of this chapter, a tank vessel of 20,000 deadweight tons or more that intends to navigate within the regulated navigation area must:

(1) Report compliance with part 164 of this chapter, to the Vessel Traffic Center (VTC);

(2) Have at least two radiotelephones capable of operating on the designated VTS frequency, one of which is capable of battery operation;

(3) When steady wind conditions in the VTS Special Area or Port Valdez exceed, or are anticipated to exceed 40 knots, proceed as directed by the VTC (entry into the VTS Special Area and Port Valdez is prohibited);

(4) When transiting the VTS Special Area, limit speed to 12 knots;

(5) If laden and intending to navigate the VTS Special Area, limit speed to 12 knots except between Middle Rock and Potato Point where the speed limit shall be 6 knots; and

(6) Until December 31, 2004, have an operating Automatic Identification System Shipborne Equipment (AISSE) system installed.

(i) The designated digital selective calling frequency (DSC) in Prince William Sound is 156.525MHz (VHF Channel 70).

(ii) AISSE equipped vessels will not be required to make voice radio position reports at designated reporting points required by § 161.20(b), unless otherwise directed by the VTC.

(iii) Whenever a vessel's AISSE becomes non-operational, as defined in § 164.43(c) of this chapter, before entering or while underway in the VTS area, a vessel must:

(A) Notify the VTC;

(B) Make the required voice radio position reports as set forth in § 161.60 and required by § 161.20(b) of this chapter;

(C) Make other voice radio reports as required by the VTS; and

(D) Restore the AISSE to operating condition as soon as possible.

(iv) Whenever a vessel's AISSE becomes non-operational due to a loss of position correction information (*i.e.*, the U.S. Coast Guard dGPS system

cannot provide the required error correction messages) a vessel must:

(A) Make the required voice radio position reports as set forth in §161.60 and required by §161.20(b) of this chapter; and

(B) Make other voice radio reports as required by the VTS.

(v) Whenever a vessel's AISSE becomes non-operational before getting underway in the VTS area, permission to get underway must be obtained from the VTC.

NOTE: Regulations pertaining to Automatic Identification System Shipborne Equipment (AISSE) required capabilities are set forth in Part 164 of this chapter.

[CGD 90–020, 59 FR 36335, July 15, 1994, as amended by CGD 95–033, 60 FR 28333, May 31, 1995; CGD 97–023, 62 FR 33365, June 19, 1997; USCG–1998–3799, 63 FR 35533, June 30, 1998; USCG–2003–14757, 68 FR 39368, July 1, 2003; 68 FR 60570, Oct. 22, 2003]

§ 165.1706 Gastineau Channel, Juneau, Alaska—Safety Zone.

(a) *Location*. The following area is a safety zone: the waters in Juneau Harbor within a 300 yard radius of the vessel or waterfront facility located at 58°17′41″ N, 134°24′22″ W used to conduct fireworks displays.

(b) *Effective date*. The safety zone becomes effective on July 3 each year at 10 p.m. ADT. It terminates at the conclusion of the fireworks display at approximately 2:30 a.m. ADT on July 5 each year, unless sooner terminated by the Captain of the Port. If the fireworks display is postponed because of inclement weather, the date and duration of the safety zone will be announced in the Local Notices to Mariners.

(c) *Regulation*. In accordance with the general regulations in §165.23 of this part, entry into this zone is prohibited unless authorized by the Captain of the Port, Southeast Alaska.

[59 FR 31934, June 21, 1994, as amended by COTP Southeast Alaska 00–018, 65 FR 81363, Dec. 26, 2000]

§ 165.1708 Tongass Narrows, Ketchikan, Alaska—Safety Zone.

(a) *Location*. The following area is a safety zone: the waters in Tongass Narrows within a 300 yard radius of the barge located at 55°20′32″ N, 131°39′40″ W used to conduct fireworks displays.

(b) *Effective date*. The safety zone becomes effective on July 3 each year at 10 p.m. ADT. It terminates at the conclusion of the fireworks display at approximately 2:30 a.m. ADT on July 5 each year, unless sooner terminated by the Captain of the Port. If the fireworks display is postponed because of inclement weather, the date and duration of the safety zone will be announced in the Local Notices to Mariners.

(c) *Regulation*. In accordance with the general regulations in §165.23 of this part, entry into this zone is prohibited unless authorized by the Captain of the Port, Southeast Alaska.

[59 FR 31933, June 21, 1994, as amended at 65 FR 81362, Dec. 26, 2000]

§ 165.1709 Security Zones: Liquefied Natural Gas Tanker Transits and Operations at Phillips Petroleum LNG Pier, Cook Inlet, AK.

(a) *Location*. The following areas are established as security zones during the specified conditions:

(1) All navigable waters within a 1000-yard radius of the Liquefied Natural Gas (LNG) tankers during their inbound and outbound transits through Cook Inlet, Alaska between the Phillips Petroleum LNG Pier, 60°40′43″ N and 151°24′10″ W, and the Homer Pilot Station at 59°34′86″ N and 151°25′74″ W. On the inbound transit, this security zone remains in effect until the tanker is alongside the Phillips Petroleum LNG Pier, 60°40′43″ N and 151°24′10″ W.

(2) All navigable waters within a 1000-yard radius of the Liquefied Natural Gas tankers while they are moored at Phillips Petroleum LNG Pier, 60°40′43″ N and 151°24′10″ W.

(b) *Special Regulations*. (1) For the purpose of this section, the general regulations contained in 33 CFR 165.33 apply to all but the following vessels in the areas described in paragraph (a):

(i) Vessels scheduled to moor and offload or load cargo at other Nikiski marine terminals that have provided the Coast Guard with an Advance Notice of Arrival.

(ii) Commercial fishing vessels, including drift net and set net vessels,

fishing from the waters within the zone, if

(A) The owner of the vessel has previously requested approval from the Captain of the Port representative, Marine Safety Detachment Kenai, Alaska, to fish in the security zone and

(B) Has provided the Captain of the Port representative, Marine Safety Detachment Kenai, Alaska current information about the vessel, including:

(*1*) The name and/or the official number, if documented, or state number, if numbered by a state issuing authority;

(*2*) A brief description of the vessel, including length, color, and type of vessel;

(*3*) The name, Social Security number, current address, and telephone number of the vessel's master, operator or person in charge; and

(*4*) Upon request, information on the vessel's crew.

(C) A vessel owner or operator is required to submit the information one time, but shall provide the Captain of the Port representative updated information when any part of it changes.

(D) The Captain of the Port must approve a vessel's request prior to being allowed into the security zone at the Phillips Petroleum LNG Pier.

(E) The vessel is operated in compliance with any specific orders issued to the vessel by the Captain of the Port or other regulations controlling the operation of vessels within the security zone that may be in effect.

(2) All persons and vessels shall comply with the instructions of the Captain of the Port representative or the designated on-scene patrol personnel. These personnel are comprised of commissioned, warrant, and petty officers of the Coast Guard. Upon being hailed by a U. S. Coast Guard vessel by siren, radio, flashing light, or other means, the operator of a vessel shall proceed as directed.

(3) The Marine Safety Detachment Kenai, Alaska will notify the maritime community of these security zones by publishing a Local Notice to Mariners and via a bimonthly marine Broadcast Notice to Mariners.

[COTP 02–001, 67 FR 44059, July 1, 2002]

§ 165.1710 Port Valdez and Valdez Narrows, Valdez, Alaska—security zones.

(a) *Location*. The following areas are security zones:

(1) *Trans-Alaska Pipeline (TAPS) Valdez Terminal complex (Terminal), Valdez, Alaska and TAPS tank vessels*. All waters enclosed within a line beginning on the southern shoreline of Port Valdez at 61°05′03.6″ N, 146°25′42″ W; thence northerly to yellow buoy at 61°06′00″ N, 146°25′42″ W; thence east to the yellow buoy at 61°06′00″ N, 146°21′30″ W; thence south to 61°05′06″ N, 146°21′30″ W; thence west along the shoreline and including the area 2000 yards inland along the shoreline to the beginning point.

(2) *Tank vessel moving security zone*. All waters within 200 yards of any TAPS tank vessel maneuvering to approach, moor, unmoor or depart the TAPS Terminal or transiting, maneuvering, laying to or anchored within the boundaries of the Captain of the Port, Prince William Sound Zone described in 33 CFR 3.85–20 (b).

(3) *Valdez Narrows, Port Valdez, Valdez, Alaska*. All waters 200 yards either side of the Valdez Narrows Tanker Optimum Track line bounded by a line beginning at 61°05′15″ N, 146°37′18″ W; thence south west to 61°04′00″ N, 146°39′52″ W; thence southerly to 61°02′32.5″ N, 146°41′25″ W; thence north west to 61°02′40.5″ N, 146°41′47″ W; thence north east to 61°04′07.5″ N, 146°40′15″ W; thence north east to 61°05′22″ N, 146°37′38″ W; thence south east back to the starting point at 61°05′15″ N, 146°37′18″ W.

(b) *Regulations*. (1) The general regulations in 33 CFR 165.33 apply to the security zones described in paragraph (a) of this section.

(2) Tank vessels transiting directly to the TAPS terminal complex, engaged in the movement of oil from the terminal or fuel to the terminal, and vessels used to provide assistance or support to the tank vessels directly transiting to the terminal, or to the terminal itself, and that have reported their movements to the Vessel Traffic Service, as required under 33 CFR part 161 and § 165.1704, may operate as necessary to ensure safe passage of tank vessels to and from the terminal.

(3) All persons and vessels must comply with the instructions of the Coast Guard Captain of the Port and the designated on-scene patrol personnel. These personnel comprise commissioned, warrant, and petty officers of the Coast Guard. Upon being hailed by a vessel displaying a U.S. Coast Guard ensign by siren, radio, flashing light, or other means, the operator of the vessel must proceed as directed. Coast Guard Auxiliary and local or state agencies may be present to inform vessel operators of the requirements of this section and other applicable laws.

[COTP Prince William Sound 02–011, 71 FR 2154, Jan. 13, 2006]

§ 165.1711 Security Zones; Waters of the Seventeenth Coast Guard District

(a) *Definitions.* As used in this section—

Alaska Marine Highway System vessel (''AMHS vessel'') means any vessel owned or operated by the Alaska Marine Highway System, including, but not limited to: M/V AURORA, M/V CHENEGA, M/V COLUMBIA, M/V FAIRWEATHER, M/V KENNICOTT, M/V LECONTE, M/V LITUYA, M/V MALASPINA, M/V MATANUSKA, M/V TAKU, and the M/V TUSTUMENA.

Designated on Scene Representative means any U.S. Coast Guard commissioned, warrant or petty officer who has been authorized by the District Commander or local Captain of the Port (COTP), as defined in 33 CFR part 3, subpart 3.85, to act on his or her behalf, or other Federal, State or local law enforcement Officers designated by the COTP.

Escorted HCPV or AMHS vessel means a HCPV or AMHS vessel that is accompanied by one or more Coast Guard assets or Federal, State or local law enforcement agency assets as listed below:

(1) Coast Guard surface or air asset displaying the Coast Guard insignia.

(2) State, Federal or local law enforcement assets displaying the applicable agency markings and or equipment associated with the agency.

Federal Law Enforcement Officer means any Federal government law enforcement officer who has authority to enforce federal criminal laws.

High Capacity Passenger Vessel (''HCPV'') means a passenger vessel greater than 100 feet in length that is authorized to carry more than 500 passengers for hire.

State law enforcement Officer means any State or local government law enforcement officer who has authority to enforce State or local criminal laws.

(b) *Location.* The following areas are security zones: all waters within 100 yards around escorted High Capacity Passenger Vessels or escorted Alaska Marine Highway System vessels in the navigable waters of the Seventeenth Coast Guard District as defined in 33 CFR 3.85–1, from surface to bottom.

(c) *Regulations.* (1) No vessel may approach within 100 yards of an escorted HCPV or escorted AMHS vessel during their transits within the navigable waters of the Seventeenth Coast Guard District.

(2) Moored or anchored vessels that are overtaken by this moving zone must remain stationary at their location until the escorted vessel maneuvers at least 100 yards away.

(3) The local Captain of the Port may notify the maritime and general public by marine information broadcast of the periods during which individual security zones have been activated by providing notice in accordance with 33 CFR 165.7.

(4) Persons desiring to transit within 100 yards of a moving, escorted HCPV or AMHS vessel in the Seventeenth Coast Guard District must contact the designated on scene representative on VHF channel 16 (156.800 MHz) or VHF channel 13 (156.650 MHz) to receive permission.

(5) If permission is granted to transit within 100 yards of an escorted HCPV or AMHS vessel, all persons and vessels must comply with the instructions of the designated on scene representative.

(6) All commercial fishing vessels as defined by 46 U.S.C. 2101(11a) while actively engaged in fishing are exempted from the provisions of this section.

[CGD17–05–002, 71 FR 19123, Apr. 13, 2006]

§ 165.1712 Safety Zones; Annual Independence Day Firework Displays, Skagway, Haines, and Wrangell, AK.

(a) *Regulated areas.* The following areas are permanent safety zones:

(1) All navigable waters of Taiya Inlet within a 300-yard radius of the fireworks launching point located on the White Pass and Yukon Railway Dock at approximate position 59°26.70′ N, 135°19.58′ W in the vicinity of the mouth of the Small Boat Harbor, Skagway, Alaska;

(2) All navigable waters of Portage Cove, Haines, AK within a 300-yard radius around the fireworks launch area, centered at approximate position 59°14′16.72″ N, 135°25′35.79″ W; (3) all navigable waters of Wrangell Harbor within a 300-yard radius of the fireworks launch platform centered at approximate position 56°28.223′ N and 132°23.285′ W.

(b) *Effective date*. This rule is effective from 10 p.m. until 2:30 a.m., July 3 through July 5, of each year.

(c) *Definitions*. The following definitions apply to this section:

Designated Representative—a ''designated representative'' is any Coast Guard commissioned, warrant or petty officer of the U.S. Coast Guard who has been designated by the Captain of the Port, to act on his or her behalf.

(d) *Regulations*. (1) The general regulations contained in 33 CFR 165.23, as well as the following regulations, apply.

(2) No vessels, except for fireworks barge and accompanying vessels, will be allowed to transit the safety zones without the permission of the COTP or the designated representative.

(3) Vessel operators desiring to enter or operate within any of the regulated areas shall contact the COTP or the designated representative via VHF channel 16 or 907–463–2990 (Sector Juneau command center) to obtain permission to do so.

[USCG–2013–0078, 78 FR 38202, June 26, 2013]

EDITORIAL NOTE: At 79 FR 6470, Feb. 4, 2014, § 165.1712 was added; however, the amendment could not be incorporated since that section already exists.

Subpart G—Protection of Naval Vessels

AUTHORITY: 14 U.S.C. 91 and 633; 49 CFR 1.45.

SOURCE: LANT AREA–02–001, 67 FR 31960, May 13, 2002, unless otherwise noted.

§ 165.2010 Purpose.

This subpart establishes the geographic parameters of naval vessel protection zones surrounding U.S. naval vessels in the navigable waters of the United States. This subpart also establishes when the U.S. Navy will take enforcement action in accordance with the statutory guidelines of 14 U.S.C. 91. Nothing in the rules and regulations contained in this subpart shall relieve any vessel, including U.S. naval vessels, from the observance of the Navigation Rules. The rules and regulations contained in this subpart supplement, but do not replace or supercede, any other regulation pertaining to the safety or security of U.S. naval vessels.

§ 165.2015 Definitions.

The following definitions apply to this subpart:

Atlantic Area means that area described in 33 CFR 3.04–1 Atlantic Area.

Large U.S. naval vessel means any U.S. naval vessel greater than 100 feet in length overall.

Naval defensive sea area means those areas described in 32 CFR part 761.

Naval vessel protection zone is a 500-yard regulated area of water surrounding large U.S. naval vessels that is necessary to provide for the safety or security of these U.S. naval vessels.

Navigable waters of the United States means those waters defined as such in 33 CFR part 2.

Navigation rules means the Navigation Rules, International-Inland.

Official patrol means those personnel designated and supervised by a senior naval officer present in command and tasked to monitor a naval vessel protection zone, permit entry into the zone, give legally enforceable orders to persons or vessels within the zone, and take other actions authorized by the U.S. Navy.

Pacific Area means that area described in 33 CFR 3.04–3 Pacific Area.

Restricted area means those areas established by the Army Corps of Engineers and set out in 33 CFR part 334.

Senior naval officer present in command is, unless otherwise designated by competent authority, the senior line officer of the U.S. Navy on active duty, eligible for command at sea, who is present

and in command of any part of the Department of Navy in the area.

U.S. naval vessel means any vessel owned, operated, chartered, or leased by the U.S. Navy; any pre-commissioned vessel under construction for the U.S. Navy, once launched into the water; and any vessel under the operational control of the U.S. Navy or a Combatant Command.

Vessel means every description of watercraft or other artificial contrivance used, or capable of being used, as a means of transportation on water, except U.S. Coast Guard or U.S. naval vessels.

§ 165.2020 Enforcement authority.

(a) *Coast Guard*. Any Coast Guard commissioned, warrant or petty officer may enforce the rules and regulations contained in this subpart.

(b) *Senior naval officer present in command*. In the navigable waters of the United States, when immediate action is required and representatives of the Coast Guard are not present or not present in sufficient force to exercise effective control in the vicinity of large U.S. naval vessels, the senior naval officer present in command is responsible for the enforcement of the rules and regulations contained in this subpart to ensure the safety and security of all large naval vessels present. In meeting this responsibility, the senior naval officer present in command may directly assist any Coast Guard enforcement personnel who are present.

§ 165.2025 Atlantic Area.

(a) This section applies to any vessel or person in the navigable waters of the United States within the boundaries of the U.S. Coast Guard Atlantic Area, which includes the First, Fifth, Seventh, Eighth and Ninth U.S. Coast Guard Districts.

NOTE TO § 165.2025 PARAGRAPH (a): The boundaries of the U.S. Coast Guard Atlantic Area and the First, Fifth, Seventh, Eighth and Ninth U.S. Coast Guard Districts are set out in 33 CFR part 3.

(b) A naval vessel protection zone exists around U.S. naval vessels greater than 100 feet in length overall at all times in the navigable waters of the United States, whether the large U.S. naval vessel is underway, anchored, moored, or within a floating drydock, except when the large naval vessel is moored or anchored within a restricted area or within a naval defensive sea area.

(c) The Navigation Rules shall apply at all times within a naval vessel protection zone.

(d) When within a naval vessel protection zone, all vessels shall operate at the minimum speed necessary to maintain a safe course, unless required to maintain speed by the Navigation Rules, and shall proceed as directed by the Coast Guard, the senior naval officer present in command, or the official patrol. When within a naval vessel protection zone, no vessel or person is allowed within 100 yards of a large U.S. naval vessel unless authorized by the Coast Guard, the senior naval officer present in command, or official patrol.

(e) To request authorization to operate within 100 yards of a large U.S. naval vessel, contact the Coast Guard, the senior naval officer present in command, or the official patrol on VHF-FM channel 16.

(f) When conditions permit, the Coast Guard, senior naval officer present in command, or the official patrol should:

(1) Give advance notice on VHF-FM channel 16 of all large U.S. naval vessel movements; and

(2) Permit vessels constrained by their navigational draft or restricted in their ability to maneuver to pass within 100 yards of a large U.S. naval vessel in order to ensure a safe passage in accordance with the Navigation Rules; and

(3) Permit commercial vessels anchored in a designated anchorage area to remain at anchor when within 100 yards of passing large U.S. naval vessels; and

(4) Permit vessels that must transit via a navigable channel or waterway to pass within 100 yards of a moored or anchored large U.S. naval vessel with minimal delay consistent with security.

NOTE TO § 165.2025 PARAGRAPH (f): The listed actions are discretionary and do not create any additional right to appeal or otherwise dispute a decision of the Coast Guard, the senior naval officer present in command, or the official patrol.

§ 165.2030 Pacific Area.

(a) This section applies to any vessel or person in the navigable waters of the United States within the boundaries of the U.S. Coast Guard Pacific Area, which includes the Eleventh, Thirteenth, Fourteenth, and Seventeenth U.S. Coast Guard Districts.

NOTE TO PARAGRAPH (a): The boundaries of the U.S. Coast Guard Pacific Area and the Eleventh, Thirteenth, Fourteenth, and Seventeenth U.S. Coast Guard Districts are set out in 33 CFR part 3.

(b) A naval vessel protection zone exists around U.S. naval vessels greater than 100 feet in length overall at all times in the navigable waters of the United States, whether the large U.S. naval vessel is underway, anchored, moored, or within a floating dry dock, except when the large naval vessel is moored or anchored within a restricted area or within a naval defensive sea area.

(c) The Navigation Rules shall apply at all times within a naval vessel protection zone.

(d) When within a naval vessel protection zone, all vessels shall operate at the minimum speed necessary to maintain a safe course, unless required to maintain speed by the Navigation Rules, and shall proceed as directed by the Coast Guard, the senior naval officer present in command, or the official patrol. When within a naval vessel protection zone, no vessel or person is allowed within 100 yards of a large U.S. naval vessel unless authorized by the Coast Guard, the senior naval officer present in command, or official patrol.

(e) To request authorization to operate within 100 yards of a large U.S. naval vessel, contact the Coast Guard, the senior naval officer present in command, or the official patrol on VHF-FM channel 16.

(f) When conditions permit, the Coast Guard, senior naval officer present in command, or the official patrol should:

(1) Give advance notice on VHF-FM channel 16 of all large U.S. naval vessel movements;

(2) Permit vessels constrained by their navigational draft or restricted in their ability to maneuver to pass within 100 yards of a large U.S. naval vessel in order to ensure a safe passage in accordance with the Navigation Rules; and

(3) Permit commercial vessels anchored in a designated anchorage area to remain at anchor when within 100 yards of passing large U.S. naval vessels; and

(4) Permit vessels that must transit via a navigable channel or waterway to pass within 100 yards of a moored or anchored large U.S. naval vessel with minimal delay consistent with security.

NOTE TO PARAGRAPH (f): The listed actions are discretionary and do not create any additional right to appeal or otherwise dispute a decision of the Coast Guard, the senior naval officer present in command, or the official patrol.

[PAC AREA–02–001, 67 FR 38394, June 4, 2002]

PART 166—SHIPPING SAFETY FAIRWAYS

Subpart A—General

Sec.
166.100 Purpose.
166.103 Geographic coordinates.
166.105 Definitions.
166.110 Modification of areas.

Subpart B—Designations of Fairways and Fairway Anchorages

166.200 Shipping safety fairways and anchorage areas, Gulf of Mexico.
166.300 Areas along the coast of California.
166.400 Areas along the coast of Alaska.
166.500 Areas along the Atlantic Coast.

AUTHORITY: 33 U.S.C. 1223; 49 CFR 1.46.

Subpart A—General

§ 166.100 Purpose.

The purpose of these regulations is to establish and designate shipping safety fairways and fairway anchorages to provide unobstructed approaches for vessels using U.S. ports.

[CGD 81–80a, 48 FR 30110, June 30, 1983]

§ 166.103 Geographic coordinates.

Geographic coordinates expressed in terms of latitude or longitude, or both, are not intended for plotting on maps or charts whose referenced horizontal datum is the North American Datum of 1983 (NAD 83), unless such geographic coordinates are expressly labeled NAD

83. Geographic coordinates without the NAD 83 reference may be plotted on maps or charts referenced to NAD 83 only after application of the appropriate corrections that are published on the particular map or chart being used.

[CGD 86–082, 52 FR 33811, Sept. 8, 1987]

§ 166.105 Definitions.

(a) *Shipping safety fairway* or *fairway* means a lane or corridor in which no artificial island or fixed structure, whether temporary or permanent, will be permitted. Temporary underwater obstacles may be permitted under certain conditions described for specific areas in Subpart B. Aids to navigation approved by the U.S. Coast Guard may be established in a fairway.

(b) *Fairway anchorage* means an anchorage area contiguous to and associated with a fairway, in which fixed structures may be permitted within certain spacing limitations, as described for specific areas in Subpart B.

[CGD 81–80a, 48 FR 30110, June 30, 1983]

§ 166.110 Modification of areas.

Fairways and fairway anchorages are subject to modification in accordance with 33 U.S.C. 1223(c); 92 Stat. 1473.

[CGD 81–80a, 48 FR 30110, June 30, 1983]

Subpart B—Designations of Fairways and Fairway Anchorages

§ 166.200 Shipping safety fairways and anchorage areas, Gulf of Mexico.

(a) *Purpose*. Fairways and anchorage areas as described in this section are established to control the erection of structures therein to provide safe approaches through oil fields in the Gulf of Mexico to entrances to the major ports along the Gulf Coast.

(b) *Special Conditions for Fairways in the Gulf of Mexico*. Temporary anchors and attendant cables or chains attached to floating or semisubmersible drilling rigs outside a fairway may be placed within a fairway described in this section for the Gulf of Mexico, provided the following conditions are met:

(1) Anchors installed within fairways to stablize semisubmersible drilling rigs shall be allowed to remain 120 days. This period may be extended by the Army Corps of Engineers, as provided by § 209.135(b).

(2) Drilling rigs must be outside of any fairway boundary to whatever distance is necessary to ensure that the minimum depth of water over an anchor line within a fairway is 125 feet.

(3) No anchor buoys or floats or related rigging will be allowed on the surface of the water or to a depth of at least 125 feet from the surface, within a fairway.

(4) Aids to Navigation or danger markings must be installed as required by 33 CFR Subchapter C.

(c) *Special Conditions for Fairway Anchorages in the Gulf of Mexico*. Structures may be placed within an area designated as a fairway anchorage, but the number of structures will be limited by spacing as follows:

(1) The center of a structure to be erected shall not be less than two (2) nautical miles from the center of any existing structure.

(2) In a drilling or production complex, associated structures connected by walkways shall be considered one structure for purposes of spacing, and shall be as close together as practicable having due consideration for the safety factors involved.

(3) A vessel fixed in place by moorings and used in conjunction with the associated structures of a drilling or production complex, shall be considered an attendant vessel and the extent of the complex shall include the vessel and its moorings.

(4) When a drilling or production complex extends more than five hundred (500) yards from the center, a new structure shall not be erected closer than two (2) nautical miles from the outer limit of the complex.

(5) An underwater completion installation in an anchorage area shall be considered a structure and shall be marked with a lighted buoy approved by the United States Coast Guard under § 66.01.

(d) *Designated Areas*—(1) *Brazos Santiago Pass Safety Fairway*. The areas between rhumb lines joining points at:

Latitude North	Longitude West
26°03′27″	97°08′36″
26°02′57″	97°07′11″
26°02′06″	96°57′24″

Latitude North	Longitude West
25°58′54″	96°19′00″

and rhumb lines joining points at:

Latitude North	Longitude West
26°04′27″	97°08′36″
26°04′58″	97°07′07″
26°04′12″	96°59′30″
26°04′00″	96°57′24″
26°00′54″	96°19′00″

(2) *Brazos Santiago Pass Anchorage Areas*. The areas enclosed by rhumb lines joining points at:

Latitude North	Longitude West
26°02′57″	97°07′11″
26°02′06″	96°57′24″
25°58′54″	96°57′24″
25°58′54″	97°07′18″
26°02′57″	97°07′11″

and rhumb lines joining points at:

Latitude North	Longitude West
26°04′58″	97°07′07″
26°09′00″	97°07′00″
26°09′00″	96°59′30″
26°04′12″	96°59′30″
26°04′58″	97°07′07″

(3) *Port Mansfield Safety Fairway*. The area between a rhumb line joining points at:

Latitude North	Longitude West
26°33′39″	97°16′04″
26°33′43″	97°14′38″

and rhumb lines joining points at:

Latitude North	Longitude West
26°34′04″	97°16′05″
26°34′40″	97°15′47″
26°34′43″	97°14′40″

(4) *Aransas Pass Safety Fairway*. The area between rhumb lines joining points at:

Latitude North	Longitude West
27°49′21″	97°02′08″
27°48′11″	97°01′06″
27°46′26″	96°57′40″
27°45′14″	96°55′26″
27°44′09″	96°53′25″
27°42′47″	96°51′39″
27°39′24″	96°48′26″
27°21′59″	96°11′42″

and rhumb lines joining points at:

Latitude North	Longitude West
27°50′15″	97°01′32″
27°49′54″	96°59′56″
27°45′22″	96°51′19″
27°44′35″	96°48′31″
27°43′49″	96°45′47″
27°35′17″	96°27′46″
27°33′33″	96°24′06″
27°25′53″	96°07′56″

separated by areas enclosed by rhumb lines joining points at:

Latitude North	Longitude West
27°41′10″	96°47′23″
27°34′50″	96°34′01″
27°34′59″	96°31′56″
27°42′03″	96°46′51″
27°41′10″	96°47′23″

and rhumb lines joining points at:

Latitude North	Longitude West
27°33′06″	96°30′21″
27°23′33″	96°10′12″
27°24′19″	96°09′26″
27°33′15″	96°28′16″
27°33′06″	96°30′21″

(5) *Aransas Pass Anchorage Areas*. The areas enclosed by rhumb lines joining points at:

Latitude North	Longitude West
27°49′54″	96°59′56″
27°45′22″	96°51′19″
27°51′46″	96°40′12″
27°53′36″	96°56′30″
27°49′54″	96°59′56″

and rhumb lines joining points at:

Latitude North	Longitude West
27°45′14″	96°55′26″
27°43′00″	96°55′27″
27°44′09″	96°53′25″
27°45′14″	96°55′26″

(6) *Matagorda Entrance Safety Fairway*. The areas between rhumb lines joining points at:

Latitude North	Longitude West
28°24′50″	96°19′38″
28°22′16″	96°17′40″
28°14′48″	96°09′42″
28°11′24″	96°06′06″
28°10′06″	96°04′42″
27°38′02″	95°49′39″

with rhumb lines joining points at:

Latitude North	Longitude West
28°25′31″	96°18′48″

Latitude North	Longitude West
28°23′38″	96°16′00″
28°16′12″	96°08′06″
28°12′30″	96°04′12″
28°11′13″	96°02′46″
27°38′12″	95°47′19″

(7) *Matagorda Entrance Anchorage Areas*. The areas enclosed by rhumb lines joining points at:

Latitude North	Longitude West
28°22′16″	96°17′40″
28°14′48″	96°09′42″
28°12′42″	96°12′12″
28°20′12″	96°20′12″
28°22′16″	96°17′40″

and rhumb lines joining points at:

Latitude North	Longitude West
28°23′38″	96°16′00″
28°25′36″	96°13′36″
28°18′12″	96°05′36″
28°16′12″	96°08′06″
28°23′38″	96°16′00″

(8) *Freeport Harbor Safety Fairway*. The area between rhumb lines joining points at:

Latitude North	Longitude West
28°55′19″	95°17′46″
28°52′58″	95°16′06″
28°44′52″	95°07′43″
28°43′32″	95°06′18″
28°04′48″	94°26′12″

and rhumb lines joining points at:

Latitude North	Longitude West
28°55′59″	95°16′55″
28°54′05″	95°14′10″
28°45′58″	95°5′48″
28°44′39″	95°04′22″
28°07′46″	94°26′12″

(9) *Freeport Harbor Anchorage Areas*. The areas enclosed by rhumb lines joining points at:

Latitude North	Longitude West
28°52′58″	95°16′06″
28°44′52″	95°07′43″
28°42′24″	95°12′00″
28°51′30″	95°18′42″
28°52′58″	95°16′06″

and rhumb lines joining points at:

Latitude North	Longitude West
28°54′05″	95°14′10″
28°56′54″	95°09′18″
28°47′42″	95°02′42″
28°45′58″	95°05′48″
28°54′05″	95°14′10″

(10) *Galveston Entrance Safety Fairways*. The areas between rhumb lines joining points at:

Latitude North	Longitude West
27°44′03″	94°26′12″
28°04′48″	94°26′12″
28°07′46″	94°26′12″
29°06′24″	94°26′12″
29°07′42″	94°27′48″
29°18′10″	94°39′16″
29°19′39″	94°41′33″
29°20′44″	94°40′44″
29°19′23″	94°37′08″
29°10′30″	94°22′54″
29°10′17″	94°22′30″
29°09′06″	94°20′36″
28°17′17″	92°57′59″

and rhumb lines joining points at:

Latitude North	Longitude West
27°44′13″	94°23′57″
29°06′24″	94°23′55″
29°07′41″	94°22′23″
28°11′57″	92°53′25″

(11) *Galveston Entrance Anchorage Areas*. The areas enclosed by rhumb lines joining points at:

Latitude North	Longitude West
29°18′10″	94°39′16″
29°08′04″	94°28′12″
29°03′13″	94°36′48″
29°14′48″	94°45′12″
29°18′10″	94°39′16″

and rhumb lines joining points at:

Latitude North	Longitude West
29°19′23″	94°37′08″
29°22′18″	94°32′00″
29°14′23″	94°25′53″
29°13′24″	94°27′33″
29°19′23″	94°37′08″

(12) *Sabine Pass Safety Fairway*. The areas between rhumb lines joining points at:

Latitude North	Longitude West
29°38′25″	93°50′02″
29°35′19″	93°49′10″
29°33′00″	93°46′26″
29°32′03″	93°46′44″
29°30′39″	93°43′41″
29°28′30″	93°41′09″
29°07′28″	93°41′08″
28°17′17″	92°57′59″
28°11′57″	92°53′25″
27°51′58″	92°36′20″

and rhumb lines joining points at:

Latitude North	Longitude West
29°38′48″	93°48′59″
29°37′32″	93°48′02″
29°36′28″	93°47′14″
29°32′52″	93°43′00″
29°31′13″	93°41′04″
29°29′20″	93°38′51″
29°08′08″	93°38′52″
28°39′02″	93°13′39″
28°36′15″	93°11′15″
27°52′09″	92°33′40″

(13) *Sabine Pass Anchorage Areas*—(i) *Sabine Pass Inshore Anchorage Area*. The area enclosed by rhumb lines joining points at:

Latitude North	Longitude West
29°37′32″	93°48′02″
29°37′32″	93°21′25″
29°32′52″	93°43′00″
29°36′28″	93°47′14″

(ii) *Sabine Bank Offshore (North) Anchorage Area*. The area enclosed by rhumb lines joining points at:

Latitude North	Longitude West
29°26′06″	93°43′00″
29°26′06″	93°41′08″
29°24′06″	93°41′08″
29°24′06″	93°43′00″

(iii) *Sabine Bank Offshore (South) Anchorage Area*. The area enclosed by rhumb lines joining points at:

Latitude North	Longitude West
29°16′55″	93°43′00″
29°16′55″	93°41′08″
29°14′29″	93°41′08″
29°14′29″	93°43′00″

(iv) *Sabine Bank Offshore (East) Anchorage Area*. The area enclosed by rhumb lines joining points at:

Latitude North	Longitude West
29°26′06″	93°38′52″
29°26′06″	93°37′00″
29°24′06″	93°37′00″
29°24′06″	93°38′52″

(14) *Coastwise Safety Fairways*—(i) *Brazos Santiago Pass to Aransas Pass*. The areas between rhumb lines joining points at:

Latitude North	Longitude West
26°04′12″	96°59′30″
26°09′00″	96°59′30″
27°46′26″	96°57′40″

and rhumb lines joining points at:

Latitude North	Longitude West
25°58′54″	96°57′24″
26°02′06″	96°57′24″
26°04′00″	96°57′24″
27°40′36″	96°55′30″
27°43′00″	96°55′27″
27°45′14″	96°55′26″

(ii) *Aransas Pass to Calcasieu Pass*. The areas between rhumb lines joining points at:

Latitude North	Longitude West
27°43′00″	96°55′27″
27°44′09″	96°53′25″
27°45′22″	96°51′19″
27°51′46″	96°40′12″
28°11′24″	96°06′06″
28°12′30″	96°04′12″
28°42′24″	95°12′00″
28°44′52″	95°07′43″
28°45′58″	95°05′48″
28°47′42″	95°02′42″
29°07′42″	94°27′48″
29°10′17″	94°22′30″
29°29′30″	93°58′24″
29°32′03″	93°46′44″
29°33′00″	93°46′26″
29°32′52″	93°43′00″
29°37′32″	93°21′25″

with rhumb lines joining points at:

Latitude North	Longitude West
27°40′36″	96°55′30″
27°42′47″	96°51′39″
27°44′35″	96°48′31″
28°10′06″	96°04′42″
28°11′13″	96°02′46″
28°43′32″	95°06′18″
28°44′39″	95°04′22″
29°06′24″	94°26′12″
29°06′24″	94°23′55″
29°07′41″	94°22′23″
29°09′06″	94°20′36″
29°27′40″	93°57′18″
29°30′39″	93°43′41″
29°31′13″	93°41′04″
29°33′56″	93°28′35″
29°32′57″	93°17′00″

(15) *Calcasieu Pass Safety Fairway*. The areas between rhumb lines joining points at:

Latitude North	Longitude West
29°45′00″	93°20′58″
29°40′56″	93°20′18″
29°38′18″	93°20′42″
29°37′32″	93°21′25″
29°32′57″	93°17′00″
29°31′08″	93°14′38″
28°39′02″	93°13′39″

and rhumb lines joining points at:

Latitude North	Longitude West
29°45′05″	93°20′03″
29°41′12″	93°19′37″
29°37′30″	93°18′15″
29°31′16″	93°12′16″
28°36′15″	93°11′15″

(16) *Calcasieu Pass Anchorage Areas*—(i) *Calcasieu Pass North Anchorage Area*. The area enclosed by rhumb lines joining points at:

Latitude North	Longitude West
29°41′12″	93°19′37″
29°41′12″	93°12′28″
29°31′16″	93°12′16″
29°37′30″	93°18′15″

(ii) *Calcasieu Pass South Anchorage Area*. The area enclosed by rhumb lines joining points at:

Latitude North	Longitude West
28°59′30″	93°16′30″
28°59′30″	93°14′00″
28°56′00″	93°14′00″
28°56′00″	93°16′30″

(17) *Lower Mud Lake Safety Fairway*. The area enclosed by rhumb lines joining points at:

Latitude North	Longitude West
29°43′24″	93°00′18″
29°42′00″	93°00′18″

and rhumb lines joining points at:

Latitude North	Longitude West
29°43′33″	93°00′48″
29°42′00″	93°00′48″

(18) *Freshwater Bayou Safety Fairway*. The area between lines joining points at:

Latitude North	Longitude West
29°31′59″	92°18′45″
29°31′10″	92°18′54″
29°31′13″	92°19′14″
29°27′44″	92°19′53″

and a line joining points at:

Latitude North	Longitude West
29°27′34″	92°18′45″
29°31′03″	92°18′06″
29°31′06″	92°18′26″
29°31′55″	92°18′17″

(19) *Southwest Pass Safety Fairway*. The area between lines joining points at:

Latitude North	Longitude West
29°34′48″	92°03′12″
29°30′48″	92°07′00″
29°23′30″	92°08′24″

and lines joining points at:

Latitude North	Longitude West
29°34′24″	92°02′24″
29°30′24″	92°06′12″
29°23′24″	92°07′30″

(20) *Atchafalaya Pass Safety Fairway*. The area between a line joining points at:

Latitude North	Longitude West
29°22′36″	91°23′28″
29°14′42″	91°30′28″

and a line joining points at:

Latitude North	Longitude West
29°14′05″	91°29′34″
29°21′59″	91°22′34″

(21) *Bayou Grand Caillou Safety Fairway*. The area between a line joining points at:

Latitude North	Longitude West
29°10′59″	90°57′26″
29°05′24″	90°58′10″
29°01′08″	91°00′44″

and a line joining points at:

Latitude North	Longitude West
29°00′40″	90°59′43″
29°05′06″	90°57′03″
29°09′46″	90°56′27″

(22) *Cat Island Pass Safety Fairway*. The area between lines joining points at:

Latitude North	Longitude West
29°05′57″	90°34′32″
29°04′56″	90°35′09″
29°03′14″	90°35′10″
29°03′14″	90°35′17″
29°01′24″	90°34′55″

and lines joining points at:

Latitude North	Longitude West
29°06′00″	90°34′21″
29°05′31″	90°34′12″
29°03′13″	90°34′13″
29°03′13″	90°34′07″
29°01′34″	90°33′47″

(23) *Belle Pass Safety Fairway*. The area between a line joining points at:

Latitude North	Longitude West
29°05′06″	90°14′07″
29°02′50″	90°14′46″

and a line joining points at:

Latitude North	Longitude West
29°02′56″	90°13′48″
29°05′06″	90°13′10″

(24) *Barataria Pass Safety Fairway*. The area between a line joining points at:

Latitude North	Longitude West
29°16′00″	89°57′00″
29°14′54″	89°55′48″

and a line joining points at:

Latitude North	Longitude West
29°16′30″	89°56′06″
29°15′18″	89°55′00″

(25) *Grand Bayou Pass Safety Fairway*. The areas between a line joining points at:

Latitude North	Longitude West
29°17′36″	89°41′36″
29°16′48″	89°42′12″

and a line joining points at:

Latitude North	Longitude West
29°17′18″	89°40′36″
29°16′18″	89°41′18″

(26) *Empire to the Gulf Safety Fairway*. The area between a line joining points at:

Latitude North	Longitude West
29°15′22″	89°36′55″
29°13′52″	89°37′15″

and a line joining points at:

Latitude North	Longitude West
29°13′24″	89°36′11″
29°14′54″	89°35′51″

(27) *Gulf Safety Fairway. Aransas Pass Safety Fairway to Southwest Pass Safety Fairway*. The areas between rhumb lines joining points at:

Latitude North	Longitude West
27°33′06″	96°30′21″
27°33′15″	96°28′16″
27°33′33″	96°24′06″
28°00′36″	90°08′18″

and rhumb lines joining points at:

Latitude North	Longitude West
27°34′50″	96°34′01″
27°34′59″	96°31′56″
27°35′17″	96°27′46″
27°38′02″	95°49′39″
27°38′12″	95°47′19″
27°44′03″	94°26′12″
27°44′13″	94°23′57″
27°51′58″	92°36′20″
27°52′09″	92°33′40″
28°02′32″	90°09′28″

(28) *Southwest Pass (Mississippi River) Safety Fairway*—(i) *Southwest Pass (Mississippi River) to Gulf Safety Fairway*. The area enclosed by rhumb lines joining points at:

Latitude North	Longitude West
28°54′33″	89°26′07″
28°52′42″	89°27′06″
28°50′00″	89°27′06″
28°02′32″	90°09′28″

and rhumb lines joining points at:

Latitude North	Longitude West
28°54′18″	89°25′46″
28°53′30″	89°25′18″
28°53′30″	89°23′48″
28°50′40″	89°24′48″
28°48′48″	89°24′48″
28°47′24″	89°26′30″
28°00′36″	90°08′18″

(ii) *Southwest Pass (Mississippi River) to Sea Safety Fairway*. The area enclosed by rhumb lines joining points at:

Latitude North	Longitude West
28°54′33″	89°26′07″
28°52′42″	89°27′06″
28°50′00″	89°27′06″
28°47′24″	89°26′30″
28°36′28″	89°18′45″

and rhumb lines joining points at:

Latitude North	Longitude West
28°54′18″	89°25′46″
28°53′30″	89°25′18″
28°53′30″	89°23′48″
28°50′40″	89°24′48″
28°48′48″	89°24′48″
28°45′06″	89°22′12″
28°43′27″	89°21′01″
28°37′54″	89°17′06″

(iii) *Southwest Pass (Mississippi River) to South Pass (Mississippi River) Safety Fairway*. The areas between rhumb line joining points at:

Latitude North	Longitude West
28°45′06″	89°22′12″
28°55′56″	89°03′09″

and rhumb lines joining points at:

Latitude North	Longitude West
28°43′27″	89°21′01″
28°54′55″	89°00′44″

(29) *Southwest Pass (Mississippi River) Anchorage*. The area enclosed by rhumb lines joining points at:

Latitude North	Longitude West
28°53′30″	89°23′48″
28°53′30″	89°21′48″
28°55′06″	89°21′48″
28°55′06″	89°19′18″
28°52′41″	89°17′30″
28°50′40″	89°21′14″
28°50′40″	89°24′48″

(30) *South Pass (Mississippi River) Safety Fairway*—(i) *South Pass to Sea Safety Fairway*. The areas between rhumb lines joining points at:

Latitude North	Longitude West
28°59′18″	89°08′30″
28°58′42″	89°07′30″
28°58′09″	89°08′30″
28°55′56″	89°03′09″
28°54′55″	89°00′44″
28°54′15″	88°59′00″

and rhumb lines joining points at:

Latitude North	Longitude West
East jetty light:	
28°59′24″	89°08′12″
29°00′09″	89°07′24″
29°00′00″	89°07′00″
28°57′56″	89°02′18″
28°57′18″	89°00′48″
28°56′16″	88°58′29″
28°55′42″	88°57′06″

(ii) *South Pass (Mississippi River) to Mississippi River-Gulf Outlet Channel Safety Fairway*. The areas between rhumb lines joining points at:

Latitude North	Longitude West
28°57′18″	89°00′48″
29°04′18″	88°48′31″
29°24′35″	88°57′17″

and rhumb lines joining points at:

Latitude North	Longitude West
28°56′16″	88°58′29″
29°03′30″	88°45′42″
29°23′06″	88°54′11″
29°26′28″	88°55′39″

(31) *South Pass (Mississippi River) Anchorage*. The areas within rhumb lines joining points at:

Latitude North	Longitude West
29°00′00″	89°07′00″
29°03′36″	89°02′18″
28°57′56″	89°02′18″

(32) *Mississippi River-Gulf Outlet Safety Fairway*. (i) The areas between rhumb lines joining points at:

Latitude North	Longitude West
29°42′10″	89°25′49″
29°29′33″	89°07′47″
29°27′14″	89°03′20″
29°24′38″	89°00′00″
29°24′35″	88°57′17″

and rhumb lines joining points at:

Latitude North	Longitude West
29°42′29″	89°25′31″
29°29′53″	89°07′31″
29°27′01″	89°01′54″
29°26′38″	88°58′43″

(ii) *Mississippi River-Gulf Outlet Channel to Mobile Ship Channel Safety Fairway*. The areas within rhumb lines joining points at:

Latitude North	Longitude West
29°26′38″	88°58′43″
29°29′57″	88°54′48″
29°38′59″	88°44′04″
29°56′43″	88°20′50″
29°58′03″	88°19′05″
30°05′29″	88°09′19″

and rhumb lines joining points at:

Latitude North	Longitude West
29°26′28″	88°55′39″
29°27′54″	88°53′54″
29°37′32″	88°42′28″
29°55′14″	88°19′15″
29°56′34″	88°17′30″
30°03′50″	88°08′01″
30°05′15″	88°06′05″

(33) *Mississippi River-Gulf Outlet Anchorage*. (i) The areas within rhumb lines joining points at:

Latitude North	Longitude West
29°27′01″	89°01′54″

Latitude North	Longitude West
29°32′12″	88°55′42″
29°29′57″	88°54′48″
29°26′38″	88°58′43″

(ii) The areas within rhumb lines joining points at:

Latitude North	Longitude West
29°26′28″	88°55′39″
29°27′54″	88°53′54″
29°24′33″	88°52′27″
29°23′06″	88°54′11″

(34) *Gulfport Safety Fairway*. The areas between rhumb lines joining points at:

Latitude North	Longitude West
30°20′54″	89°05′36″
30°13′56″	88°59′42″
30°11′09″	88°59′56″
30°06′45″	88°56′24″
30°05′42″	88°56′24″

and rhumb lines joining points at:

Latitude North	Longitude West
30°21′27″	89°04′38″
30°14′11″	88°58′29″
30°11′29″	88°58′45″
30°07′42″	88°55′37″

(35) *Biloxi Safety Fairway*. The area between lines joining points at:

Latitude North	Longitude West
30°24′06″	88°50′57″
30°23′15″	88°50′22″
30°21′11″	88°47′36″
30°20′13″	88°47′04″
30°15′06″	88°47′06″
30°13′09″	88°47′46″
30°12′23″	88°49′02″

and lines joining points at:

Latitude North	Longitude West
30°24′27″	88°50′31″
30°23′57″	88°49′31″
30°21′42″	88°46′36″
30°20′25″	88°45′55″
30°14′57″	88°45′57″
30°12′56″	88°46′39″
30°12′00″	88°45′25″

(36) *Ship Island Pass to Horn Island Pass Safety Fairway*. The areas between rhumb line joining points at:

Latitude North	Longitude West
30°05′42″	88°56′24″
30°06′38″	88°31′26″

and rhumb line joining points at:

Latitude North	Longitude West
30°07′42″	88°55′37″
30°08′27″	88°36′57″

(37) *Pascagoula Safety Fairway*. The areas between rhumb lines joining points at:

Latitude North	Longitude West
30°20′46″	88°34′39″
30°20′21″	88°34′39″
30°17′00″	88°31′21″
30°12′59″	88°30′53″
30°11′50″	88°32′05″
30°08′27″	88°36′57″
30°06′38″	88°31′26″
29°56′43″	88°20′50″
29°55′14″	88°19′15″
29°20′00″	87°41′47″

and rhumb line joining points at:

Latitude North	Longitude West
30°20′30″	88°33′18″
30°18′39″	88°31′25″

and rhumb line joining points at:

Latitude North	Longitude West
30°20′26″	188°31′25″
30°18′39″	188°31′25″

and rhumb lines joining points at:

Latitude North	Longitude West
30°19′21″	88°30′12″
30°17′25″	88°30′12″
30°12′46″	88°29′42″
30°11′21″	88°31′00″
30°09′33″	88°29′48″
30°07′30″	88°29′09″
29°58′03″	88°19′05″
29°56′34″	88°17′30″
29°20′48″	87°39′31″

(38) *Horn Island Pass to Mobile Ship Channel Safety Fairway*. The areas between rhumb line joining points at:

Latitude North	Longitude West
30°09′33″	88°29′48″
30°07′15″	88°06′54″

and rhumb line joining points at:

Latitude North	Longitude West
30°07′30″	88°29′09″
30°05′29″	88°09′19″

(39) *Mobile Safety Fairway*—(i) *Mobile Ship Channel Safety Fairway*. The areas between rhumb lines joining points at:

Latitude North	Longitude West
30°38′46″	88°03′24″
30°38′14″	88°02′42″
30°31′59″	88°02′00″
30°31′59″	88°04′59″

and rhumb lines joining points at:

Latitude North	Longitude West
30°31′00″	88°05′30″
30°31′00″	88°01′54″
30°26′55″	88°01′26″
30°16′35″	88°02′45″
30°14′09″	88°03′24″
30°10′36″	88°03′53″
30°08′10″	88°04′40″
30°07′15″	88°06′54″

and rhumb lines joining points at:

Latitude North	Longitude West
30°39′55″	88°01′15″
30°37′06″	88°01′23″
30°26′11″	88°00′11″
30°16′18″	88°01′35″
30°13′52″	88°01′12″
30°13′14″	88°01′12″
30°10′36″	88°01′35″
30°08′04″	88°00′36″

(ii) *Mobile Ship Channel to Sea Safety Fairway*. The areas between rhumb lines joining points at:

Latitude North	Longitude West
30°05′15″	88°01′13″
30°03′50″	88°00′00″
29°25′46″	87°29′13″

and rhumb line joining points at:

Latitude North	Longitude West
30°06′17″	87°59′15″
29°27′00″	87°27′18″

(iii) *Mobile to Pensacola Safety Fairway*. The areas between rhumb line joining points at:

Latitude North	Longitude West
30°08′04″	88°00′36″
30°14′20″	87°19′05″

and rhumb line joining points at:

Latitude North	Longitude West
30°06′17″	87°59′15″
30°12′31″	87°18′00″

(40) *Mobile Anchorage*. The areas within rhumb lines joining points at:

Latitude North	Longitude West
30°05′15″	88°06′05″
30°05′15″	88°01′13″
30°03′50″	88°00′00″
30°03′50″	88°08′01″

(41) *Pensacola Safety Fairway*. The areas between rhumb lines joining points at:

Latitude North	Longitude West
30°23′41″	87°14′34″
30°23′06″	87°13′53″
30°22′54″	87°13′53″
30°20′47″	87°15′45″

and rhumb lines joining points at:

Latitude North	Longitude West
30°18′43″	87°19′24″
30°15′57″	87°18′19″
30°14′20″	87°19′05″
30°12′31″	87°18′00″
30°10′03″	87°18′00″
29°37′00″	87°18′00″

and rhumb lines joining points at:

Latitude North	Longitude West
30°26′27″	87°08′28″
30°25′35″	87°10′30″

and rhumb lines joining points at:

Latitude North	Longitude West
30°24′36″	87°07′07″
30°22′57″	87°09′38″
30°22′36″	87°11′50″
30°19′21″	87°14′46″
30°19′52″	87°17′31″

and rhumb lines joining points at:

Latitude North	Longitude West
30°19′15″	87°17′37″
30°16′28″	87°16′32″
30°14′32″	87°16′06″
30°12′33″	87°15′43″
29°42′30″	87°15′43″

(42) *Pensacola Anchorage*. (i) The area within rhumb lines joining points at:

Latitude North	Longitude West
30°11′49″	87°22′41″
30°12′31″	87°18′00″
30°10′03″	87°18′00″
30°09′21″	87°22′41″

(ii) The area within rhumb lines joining points at:

Latitude North	Longitude West
30°16′28″	87°16′32″
30°17′14″	87°11′52″
30°15′14″	87°11′52″
30°14′32″	87°16′06″

(43) *Pensacola to Panama City Safety Fairway*. The area between rhumb lines joining points at:

Latitude North	Longitude West
30°14′32″	87°16′06″
30°15′14″	87°11′52″
30°18′45″	86°50′00″
30°18′00″	86°20′00″
29°51′30″	85°47′33″

and rhumb lines joining points at:

Latitude West	Longitude West
30°12′33″	87°15′43″
30°16′44″	86°49′49″
30°16′01″	86°20′57″
29°48′45″	85°47′33″

(44) *Panama City Safety Fairways*. The areas between rhumb lines joining points at:

Latitude North	Longitude West
30°09′24″	85°40′12″
30°09′21″	85°41′40″
30°07′36″	85°44′20″
30°06′32″	85°47′33″
29°51′30″	85°47′33″
29°48′45″	85°47′33″
29°03′30″	85°47′33″

and rhumb lines joining points at:

Latitude North	Longitude West
30°08′34″	85°40′16″
30°07′55″	85°41′50″
30°06′49″	85°43′28″
30°04′40″	85°45′15″
29°55′27″	85°45′15″
29°51′20″	85°45′15″
29°49′19″	85°45′15″
29°00′00″	85°45′15″

(45) *Panama City Anchorage*. The area within rhumb lines joining points at:

Latitude North	Longitude West
29°55′27″	85°45′15″
29°55′27″	85°42′25″
29°51′39″	85°42′25″
29°51′20″	85°45′15″

(46) *Port St. Joe Fairway to Panama City Fairway*. The area between rhumb lines joining points at:

Latitude North	Longitude West
29°49′54″	85°19′24″
29°50′59″	85°22′25″
29°53′32″	85°22′25″
29°54′12″	85°24′00″
29°54′12″	85°25′55″
29°52′58″	85°28′43″
29°53′00″	85°29′48″
29°51′39″	85°42′25″
29°51′20″	85°45′15″

and rhumb lines joining points at:

Latitude North	Longitude West
29°48′22″	85°18′12″
29°47′21″	85°21′00″
29°50′42″	85°23′31″
29°52′51″	85°23′36″
29°53′10″	85°24′18″
29°53′10″	85°25′33″
29°51′57″	85°28′19″
29°51′04″	85°29′00″
29°50′40″	85°32′39″
29°49′19″	85°45′15″

(47) *Port St. Joe Anchorage*. The area within rhumb lines joining points at:

Latitude North	Longitude West
29°50′40″	85°32′39″
29°51′04″	85°29′00″
29°49′18″	85°30′18″

(48) *Tampa Safety Fairways*. The area between rhumb lines joining points at:

Latitude North	Longitude West
27°37′48″	82°45′54″
27°36′48″	82°55′54″
27°36′48″	83°00′00″
27°36′48″	84°39′10″

and rhumb lines joining points at:

Latitude North	Longitude West
27°35′54″	82°45′42″
27°34′48″	82°55′54″
27°34′48″	83°00′00″
27°34′48″	84°39′00″

(49) *Tampa Anchorages*—(i) *Eastern Tampa Fairway Anchorage*. The area enclosed by rhumb lines [North American Datum of 1927 (NAD–27)] joining points at:

Latitude North	Longitude West
27°36′48″	83°00′00″
27°39′00″	83°00′00″
27°39′00″	82°55′54″
27°36′48″	82°55′54″

(ii) *Western Tampa Fairway Anchorage*. The area enclosed by rhumb lines

[North American Datum of 1927 (NAD–27)] joining points at:

Latitude North	Longitude West
27°36′48″	83°05′06″
27°39′00″	83°05′06″
27°39′00″	83°01′00″
27°36′48″	83°01′00″

(50) *Charlotte Safety Fairways*. The area between rhumb lines joining points at:

Latitude North	Longitude West
26°41′18″	82°19′00″
25°30′00″	84°22′00″

and rhumb lines joining points at:

Latitude North	Longitude West
26°40′19″	82°18′28″
26°38′30″	82°19′54″
26°39′00″	82°19′00″
25°28′00″	84°21′30″

(51) *Charlotte Anchorage*. The area within rhumb lines joining points at:

Latitude North	Longitude West
26°39′00″	82°19′00″
26°38′12″	82°18′24″
26°37′36″	82°19′18″
26°38′30″	82°19′54″

(52) *Louisiana Offshore Oil Port (LOOP) Shipping Safety Fairway to Safety Zone*—(i) *North of Gulf Safety Fairway*. The two mile wide area enclosed by rhumb lines joining points at:

Latitude North	Longitude West
28°48′36″	89°55′00″
28°48′14″	89°54′17″
28°45′47″	89°54′19″
28°36′06″	89°55′44″
28°18′30″	89°55′15″
28°20′58″	89°53′03″
28°36′09″	89°53′28″
28°49′07″	89°51′30″
28°50′20″	89°53′51″

(ii) *South of Gulf Safety Fairway*. The two-mile-wide area enclosed by rhumb lines joining points at:

Latitude North	Longitude West
28°15′20″	89°55′10″
27°46′29″	89°54′23″
27°46′32″	89°52′08″
28°17′48″	89°52′58″

(53) *Heald Bank Cutoff Safety Fairway*. The area enclosed by rhumb lines [North American Datum of 1927 (NAD–27)], joining points at:

Latitude North	Longitude West
28°57′15″	94°23′55″
28°51′30″	93°56′30″
28°48′30″	93°51′45″
28°55′15″	94°23′55″

[CGD 81–040, 47 FR 20581, May 13, 1982]

EDITORIAL NOTE: For FEDERAL REGISTER citations affecting § 166.200, see the List of CFR Sections Affected, which appears in the Finding Aids section of the printed volume and at *www.fdsys.gov*.

§ 166.300 Areas along the coast of California.

(a) *Purpose*. Fairways as described in this section are established to control the erection of structures therein to provide safe vessel routes along the coast of California.

(b) *Designated Areas*—(1) *Port Hueneme Safety Fairway*. An area one nautical mile in width centered on the alinement of Port Hueneme Entrance Channel and extending seaward from the 30-foot-depth curve for a distance of 1.5 nautical miles, thence turning southerly and widening to 1.5 nautical miles at the 3-mile limit, all between lines joining the following points:

Latitude	Longitude
34°06′30″ N	119°15′00″ W
34°07′37″ N	119°14′25″ W
34°08′49″ N	119°13′21″ W

thence generally along the 30-foot-depth curve to the seaward end of the west entrance jetty; seaward end of the east entrance jetty, thence generally along the 30-foot-depth curve to:

Latitude	Longitude
34°08′21″ N	119°12′15″ W
34°07′10″ N	119°13′20″ W
34°05′48″ N	119°13′23″ W

(2) [Reserved]

[CGD 82–101, 48 FR 49019, Oct. 24, 1983]

§ 166.400 Areas along the coast of Alaska.

(a) *Purpose*. Fairways, as described in this section, are established to control the erection of structures therein to provide safe vessel routes along the coast of Alaska.

(b) *Designated Areas*—(1) *Prince William Sound Safety Fairway. (i) Hinchinbrook Entrance Safety Fairway.* The area enclosed by rhumb lines joining points at:

Latitude	Longitude
59°59′00″ N	145°27′24″ W
60°13′18″ N	146°38′06″ W
60°11′24″ N	146°47′00″ W
59°55′00″ N	145°42′00″ W

(ii) *Gulf to Hinchinbrook Safety Fairway* (recommended for inbound vessel traffic). The area enclosed by rhumb lines joining points at:

Latitude	Longitude
59°15′42″ N	144°02′07″ W
59°59′00″ N	145°27′24″ W
59°58′00″ N	145°32′12″ W
59°14′18″ N	144°04′53″ W

(iii) *Hinchinbrook to Gulf Safety Fairway* (recommended for outbound vessel traffic). The area enclosed by rhumb lines joining points at:

Latitude	Longitude
59°15′41″ N	144°23′35″ W
59°56′00″ N	145°37′39″ W
59°55′00″ N	145°42′00″ W
59°14′19″ N	144°26′25″ W

(2) *Unimak Pass Safety Fairway. (i) East/West Safety Fairway.* The area enclosed by rhumb lines joining points at:

Latitude	Longitude
54°25′58″ N	165°42′24″ W
54°22′50″ N	165°06′54″ W
54°22′10″ N	164°59′29″ W
54°07′58″ N	162°19′25″ W
54°04′02″ N	162°20′35″ W
54°22′02″ N	165°43′36″ W

(ii) *North/South Safety Fairway.* The area enclosed by rhumb lines joining points at:

Latitude	Longitude
54°42′28″ N	165°16′19″ W
54°43′32″ N	165°09′41″ W
54°22′50″ N	165°06′54″ W
54°22′10″ N	164°59′29″ W

[CGD 81–103, 51 FR 43349, Dec. 2, 1986]

§ 166.500 Areas along the Atlantic Coast.

(a) *Purpose.* Fairways, as described in this section are established to control the erection of structures therein to provide safe vessel routes along the Atlantic Coast.

(b) *Designated Areas*—(1) *Off New York Shipping Safety Fairway.* (i) Ambrose to Nantucket Safety Fairway. The area enclosed by rhumb lines, [North American Datum of 1927 (NAD–27)] joining points at:

Latitude	Longitude
40°32′20″ N	73°04′57″ W
40°30′58″ N	72°58′25″ W
40°34′07″ N	70°19′23″ W
40°35′37″ N	70°14′09″ W
40°30′37″ N	70°14′00″ W
40°32′07″ N	70°19′19″ W
40°28′58″ N	72°58′25″ W
40°27′20″ N	73°04′57″ W

(ii) *Nantucket to Ambrose Safety Fairway.* The area enclosed by rhumb lines, NAD–27, joining point at:

Latitude	Longitude
28°54′33″ N	89°26′07″ W
40°24′20″ N	73°04′58″ W
40°22′58″ N	72°58′26″ W
40°26′07″ N	70°19′09″ W
40°27′37″ N	70°13′46″ W
40°22′37″ N	70°13′36″ W
40°24′07″ N	70°19′05″ W
40°20′58″ N	72°58′26″ W
40°19′20″ N	73°04′58″ W

[CGD 84–004, 52 FR 33589, Sept. 4, 1987; 52 FR 36248, Sept. 28, 1987]

PART 167—OFFSHORE TRAFFIC SEPARATION SCHEMES

Subpart A—General

Sec.
167.1 Purpose.
167.3 Geographic coordinates.
167.5 Definitions.
167.10 Operating rules.
167.15 Modification of schemes.

Subpart B—Description of Traffic Separation Schemes and Precautionary Areas

167.50 In the approaches to Portland, ME: General.
167.51 In the approaches to Portland, ME: Precautionary area.
167.52 In the approaches to Portland, ME: Eastern approach.
167.53 In the approaches to Portland, ME: Southern approach.
167.75 In the approach to Boston, MA: General.
167.76 In the approach to Boston, MA: Precautionary areas.

167.77 In the approach to Boston, MA: Traffic separation scheme.
167.100 In the approaches to Narragansett Bay, RI, and Buzzards Bay, MA: General.
167.101 In the approaches to Narragansett Bay, RI, and Buzzards Bay, MA: Precautionary areas.
167.102 In the approaches to Narragansett Bay, RI, and Buzzards Bay, MA: Narragansett Bay approach.
167.103 In the approaches to Narragansett Bay, RI, and Buzzards Bay, MA: Buzzards Bay approach.

ATLANTIC EAST COAST

167.150 Off New York Traffic Separation Scheme: General.
167.151 Off New York: Precautionary areas.
167.152 Off New York: Eastern approach, off Nantucket.
167.153 Off New York: Eastern approach.
167.154 Off New York: South-eastern approach.
167.155 Off New York: Southern approach.
167.170 Off Delaware Bay Approach Traffic Separation Scheme: General.
167.171 Off Delaware Bay: Eastern approach.
167.172 Off Delaware Bay: Southeastern approach.
167.173 Off Delaware Bay: Two-Way Traffic Route.
167.174 Off Delaware Bay: Precautionary area.
167.200 In the approaches to Chesapeake Bay Traffic Separation Scheme: General.
167.201 In the approaches to Chesapeake Bay: Precautionary area.
167.202 In the approaches to Chesapeake Bay: Eastern approach.
167.203 In the approaches to Chesapeake Bay: Southern approach.
167.250 In the approaches to the Cape Fear River: General.
167.251 In the approaches to the Cape Fear River: Precautionary area.
167.252 In the approaches to the Cape Fear River: Traffic separation scheme.

ATLANTIC GULF COAST

167.350 In the approaches to Galveston Bay Traffic Separation Scheme and precautionary areas.

PACIFIC WEST COAST

167.400 Off San Francisco Traffic Separation Scheme: General.
167.401 Off San Francisco: Precautionary area.
167.402 Off San Francisco: Northern approach.
167.403 Off San Francisco: Southern approach.
167.404 Off San Francisco: Western approach.
167.405 Off San Francisco: Main ship channel.
167.406 Off San Francisco: Area to be avoided.
167.450 In the Santa Barbara Channel Traffic Separation Scheme: General.
167.451 In the Santa Barbara Channel: Between Point Vicente and Point Conception.
167.452 In the Santa Barbara Channel: Between Point Conception and Point Arguello.
167.500 In the approaches to Los Angeles-Long Beach Traffic Separation Scheme: General.
167.501 In the approaches to Los Angeles/Long Beach: Precautionary area.
167.502 In the approaches to Los Angeles-Long Beach: Western approach.
167.503 In the approaches to Los Angeles-Long Beach TSS: Southern approach.
167.1300 In the approaches to the Strait of Juan de Fuca: General.
167.1301 In the approaches to the Strait of Juan de Fuca: Western approach.
167.1302 In the approaches to the Strait of Juan de Fuca: Southwestern approach.
167.1303 In the approaches to the Strait of Juan de Fuca: Precautionary area ''JF.''
167.1310 In the Strait of Juan de Fuca: General.
167.1311 In the Strait of Juan de Fuca: Western lanes.
167.1312 In the Strait of Juan de Fuca: Southern lanes.
167.1313 In the Strait of Juan de Fuca: Northern lanes.
167.1314 In the Strait of Juan de Fuca: Eastern lanes.
167.1315 In the Strait of Juan de Fuca: Precautionary area ''PA.''
167.1320 In Puget Sound and its approaches: General.
167.1321 In Puget Sound and its approaches: Rosario Strait.
167.1322 In Puget Sound and its approaches: Approaches to Puget Sound other than Rosario Strait.
167.1323 In Puget Sound and its approaches: Puget Sound.
167.1330 In Haro Strait, Boundary Pass, and the Strait of Georgia: General.
167.1331 In Haro Strait and Boundary Pass.
167.1332 In the Strait of Georgia.
167.1700 In Prince William Sound: General.
167.1701 In Prince William Sound: Precautionary areas.
167.1702 In Prince William Sound: Prince William Sound Traffic
167.1703 In Prince William Sound: Valdez Arm Traffic Separation Scheme.

AUTHORITY: 33 U.S.C. 1223; Department of Homeland Security Delegation No. 0170.0.

SOURCE: CGD 81–080, 48 FR 36456, Aug. 11, 1983, unless otherwise noted.

Subpart A—General

§ 167.1 Purpose.

The purpose of the regulations in this part is to establish and designate traffic separation schemes and precautionary areas to provide access routes for vessels proceeding to and from U.S. ports.

§ 167.3 Geographic coordinates.

Geographic coordinates are defined using North American 1927 Datum (NAD 27) unless indicated otherwise.

[CGD 90–039, 59 FR 21937, Apr. 28, 1994]

§ 167.5 Definitions.

(a) *Area to be avoided* means a routing measure comprising an area within defined limits in which either navigation is particularly hazardous or it is exceptionally important to avoid casualties and which should be avoided by all ships or certain classes of ships.

(b) *Traffic separation scheme* (TSS) means a designated routing measure which is aimed at the separation of opposing streams of traffic by appropriate means and by the establishment of traffic lanes.

(c) *Traffic lane* means an area within defined limits in which one-way traffic is established. Natural obstacles, including those forming separation zones, may constitute a boundary.

(d) *Separation zone or line* means a zone or line separating the traffic lanes in which ships are proceeding in opposite or nearly opposite directions; or separating a traffic lane from the adjacent sea area; or separating traffic lanes designated for particular classes of ships proceeding in the same direction.

(e) *Precautionary area* means a routing measure comprising an area within defined limits where ships must navigate with particular caution and within which the direction of traffic flow may be recommended.

(f) *Deep-water route* means an internationally recognized routing measure primarily intended for use by ships that, because of their draft in relation to the available depth of water in the area concerned, require the use of such a route.

(g) *Two-way route* means a route within defined limits inside which two-way traffic is established, aimed at providing safe passage of ships through waters where navigation is difficult or dangerous.

[CGD 81–080, 48 FR 36456, Aug. 11, 1983; 49 FR 15548, Apr. 19, 1984, as amended by CGD 90–039, 59 FR 21937, Apr. 28, 1994; CGD 97–004, 65 FR 12945, Mar. 10, 2000; USCG–1999–5700, 65 FR 46605, July 31, 2000]

§ 167.10 Operating rules.

The operator of a vessel in a TSS shall comply with Rule 10 of the International Regulations for Preventing Collisions at Sea, 1972, as amended.

§ 167.15 Modification of schemes.

(a) A traffic separation scheme or precautionary area described in this part may be permanently amended in accordance with 33 U.S.C. 1223 (92 Stat. 1473), and with international agreements.

(b) A traffic separation scheme or precautionary area in this part may be temporarily adjusted by the Commandant of the Coast Guard in an emergency, or to accommodate operations which would create an undue hazard for vessels using the scheme or which would contravene Rule 10 of the International Regulations for Preventing Collisions at Sea, 1972. Adjustment may be in the form of a temporary traffic lane shift, a temporary suspension of a section of the scheme, a temporary precautionary area overlaying a lane, or other appropriate measure. Adjustments will only be made where, in the judgment of the Coast Guard, there is no reasonable alternative means of conducting an operation and navigation safety will not be jeopardized by the adjustment. Notice of adjustments will be made in the appropriate Notice to Mariners and in the FEDERAL REGISTER. Requests by members of the public for temporary adjustments to traffic separation schemes must be submitted 150 days prior to the time the adjustment is desired. Such Requests, describing the interference that would otherwise occur to a TSS, should be submitted to the District Commander of the Coast Guard District in which the TSS is located.

Subpart B—Description of Traffic Separation Schemes and Precautionary Areas

§ 167.50 In the approaches to Portland, ME: General.

The traffic separation scheme in the approaches to Portland, ME, consists of three parts: A precautionary area, an Eastern approach and a Southern approach. The specific areas in the traffic separation scheme in the approaches to Portland, ME, are described in §§ 167.51 through 167.53.

[USCG–2010–0718, 75 FR 77533, Dec. 13, 2010]

§ 167.51 In the approaches to Portland, ME: Precautionary area.

A precautionary area is established with a radius of 5.45 miles centered upon geographical position 43°31.60′ N, 70°05.53′ W, the areas within separation zones and traffic lanes excluded.

[USCG–2010–0718, 75 FR 77533, Dec. 13, 2010]

§ 167.52 In the approaches to Portland, ME: Eastern approach.

(a) A separation zone 1 mile wide is established and is centered upon the following geographical positions:

Latitude	Longitude
43°30.18′ N	069°59.17′ W.
43°24.28′ N	069°32.70′ W.

(b) A traffic lane ½ miles wide is established on each side of the separation zone.

[USCG–2010–0718, 75 FR 77533, Dec. 13, 2010]

§ 167.53 In the approaches to Portland, ME: Southern approach.

(a) A separation zone 1 mile wide is established and is centered upon the following geographical positions:

Latitude	Longitude
43°27.00′ N	70°03.48′ W.
43°07.82′ N	69°54.95′ W.

(b) A traffic lane 1½ mile wide is established on each side of the separation zone.

[USCG–2010–0718, 75 FR 77533, Dec. 13, 2010]

§ 167.75 In the approach to Boston, MA: General.

The traffic separation scheme (TSS) in the approach to Boston, MA, consists of three parts: Two precautionary areas and a TSS. The specific areas in the TSS in the approach to Boston, MA, are described in §§ 167.76 and 167.77. The geographic coordinates in §§ 167.76 and 167.77 are defined using North American Datum 1983 (NAD 83), which is equivalent to WGS 1984 datum.

[USCG–2010–0718, 75 FR 77533, Dec. 13, 2010]

§ 167.76 In the approach to Boston, MA: Precautionary areas.

(a) A precautionary area is established with a radius of 6.17 nautical miles centered upon geographical position 42°22.71′ N, 70°46.97′ W.

(b) (1) A precautionary area is established and is bounded to the east by a circle of radius 15.5 miles, centered upon geographical position 40°35.01′ N, 68°59.96′ W, intersected by the traffic separation schemes in the approach to Boston, MA, and Eastern approach, off Nantucket (part II of the TSS off New York) at the following geographical positions:

Latitude	Longitude
40°50.47′ N	68°58.67′ W.
40°23.75′ N	69°13.95′ W.

(2) The precautionary area is bounded to the west by a line connecting the two TSSs between the following geographical positions:

Latitude	Longitude
40°48.03′ N	69°02.95′ W.
40°36.76′ N	69°15.13′ W.

[USCG–2010–0718, 75 FR 77534, Dec. 13, 2010]

§ 167.77 In the approach to Boston, MA: Traffic separation scheme.

(a) A separation zone 1 mile wide is established and is centered upon the following geographic positions:

Latitude	Longitude
42°20.73′ N	70°39.06′ W.
42°18.28′ N	70°01.14′ W.
40°49.25′ N	69°00.81′ W.

(b) A traffic lane for northbound traffic is established between the separation zone and a line connecting the following geographical positions:

Latitude	Longitude
40°50.47′ N	68°58.67′ W.
42°20.17′ N	69°59.40′ W.
42°22.71′ N	70°38.62′ W.

(c) A traffic lane for southbound traffic is established between the separation zone and a line connecting the following geographical positions:

Latitude	Longitude
42°18.82′ N	70°40.49′ W.
42°16.39′ N	70°02.88′ W.
40°48.03′ N	69°02.95′ W.

[USCG–2010–0718, 75 FR 77534, Dec. 13, 2010]

§ 167.100 In the approaches to Narragansett Bay, RI, and Buzzards Bay, MA: General.

The traffic separation scheme in the approaches to Narragansett Bay, RI, and Buzzards Bay, MA, consists of four parts: Two precautionary areas and two approaches—a Narragansett approach and a Buzzards Bay approach. The specific areas in the approaches to Narragansett Bay, RI, and Buzzards Bay, MA, are described in §§ 167.101 through 167.103. The geographic coordinates in §§ 167.101 through 167.103 are defined using North American Datum 1983 (NAD 83), which is equivalent to WGS 1984 datum.

[USCG–2010–0718, 75 FR 77534, Dec. 13, 2010]

§ 167.101 In the approaches to Narragansett Bay, RI, and Buzzards Bay, MA: Precautionary areas.

(a) A precautionary area is established with a radius of 5.4 miles and is centered upon geographical position 41°06.00′ N, 71°23.30′ W.

(b) A precautionary area is established with a radius of 3.55 miles and is centered upon geographical position 41°25.60′ N, 71°23.30′ W.

[USCG–2010–0718, 75 FR 77534, Dec. 13, 2010]

§ 167.102 In the approaches to Narragansett Bay, RI, and Buzzards Bay, MA: Narragansett Bay approach.

(a) A separation zone 2 miles wide is established and is centered upon the following geographical positions:

Latitude	Longitude
41°22.70′ N	71°23.30′ W.
41°11.10′ N	71°23.30′ W.

(b) A traffic lane 1 mile wide is established on each side of the separation zone.

[USCG–2010–0718, 75 FR 77534, Dec. 13, 2010]

§ 167.103 In the approaches to Narragansett Bay, RI, and Buzzards Bay, MA: Buzzards Bay approach.

(a) A separation zone 1 mile wide is established and is centered upon the following geographical positions:

Latitude	Longitude
41°10.20′ N	71°19.10′ W.
41°21.80′ N	71°07.10′ W.

(b) A traffic lane 1 mile wide is established on each side of the separation zone.

NOTE TO § 167.103: A restricted area, 2 miles wide, extending from the southern limit of the Narragansett Bay approach traffic separation zone to latitude 41°24.70’ N, has been established. The restricted area will only be closed to ship traffic by the Naval Underwater System Center during periods of daylight and optimum weather conditions for torpedo range usage. The closing of the restricted area will be indicated by the activation of a white strobe light mounted on Brenton Reef Light and controlled by a naval ship supporting the torpedo range activities. There would be no ship restrictions expected during inclement weather or when the torpedo range is not in use.

[USCG–2010–0718, 75 FR 77534, Dec. 13, 2010]

ATLANTIC EAST COAST

SOURCE: CGD 84–004, 52 FR 33589, Sept. 4, 1987, unless otherwise noted.

§ 167.150 Off New York Traffic Separation Scheme: General.

The specific areas in the Off New York Traffic Separation Scheme and Precautionary Areas are described in

§§ 167.151, 167.152, 167.153, 167.154, and 167.155 of this chapter.

[CGD 84–004, 52 FR 33589, Sept. 4, 1987]

§ 167.151 Off New York: Precautionary areas.

(a) A circular precautionary area with a radius of 7 miles is established centered upon 40°27.50′ N, 73°49.90′ W.

(b) A precautionary area is established between the traffic separation scheme ''Eastern Approach, off Nantucket'' and the traffic separation scheme ''In the Approach to Boston, Massachusetts.'' (1) The precautionary area is bounded to the east by a circle of radius 15.5 miles, centered upon geographical position 40°35.00′ N, 69°00.00′ W, and is intersected by the traffic separation schemes ''In the Approach to Boston, Massachusetts'' and ''Off New York'' at the following geographic positions:

Latitude	Longitude
40°50.33′ N	68°57.00′ W
40°23.75′ N	69°14.63′ W

(2) The precautionary area is bounded to the west by a line connecting the two traffic separation schemes between the following geographical positions:

Latitude	Longitude
40°36.75′ N	68°15.16′ W
40°48.00′ N	69°03.33′ W

[CGD 84–004, 52 FR 33589, Sept. 4, 1987, as amended by USCG–2010–0351, 75 FR 36287, June 25, 2010]

§ 167.152 Off New York: Eastern approach, off Nantucket.

(a) A separation zone is established bounded by a line connecting the following geographical positions:

Latitude	Longitude
40°28.75′ N	69°14.83′ W
40°27.62′ N	70°13.77′ W
40°30.62′ N	70°14.00′ W
40°31.75′ N	69°14.97′ W

(b) A traffic lane for westbound traffic is established between the separation zone and a line connecting the following geographical positions:

Latitude	Longitude
40°36.75′ N	69°15.17′ W
40°35.62′ N	70°14.15′ W

(c) A traffic lane for eastbound traffic is established between the separation zone and a line connecting the following geographical positions:

Latitude	Longitude
40°22.62′ N	70°13.60′ W
40°23.75′ N	69°14.63′ W

[CGD 84–004, 52 FR 33589, Sept. 4, 1987]

§ 167.153 Off New York: Eastern approach.

(a) A separation zone is established bounded by a line connecting the following geographical positions:

Latitude	Longitude
40°24.33′ N	73°04.97′ W
40°24.20′ N	73°11.50′ W
40°26.00′ N	73°40.93′ W
40°27.00′ N	73°40.75′ W
40°27.20′ N	73°11.50′ W
40°27.33′ N	73°04.95′ W

(b) A traffic lane for westbound traffic is established between the separation zone and a line connecting the following geographical positions:

Latitude	Longitude
40°32.33′ N	73°04.95′ W
40°32.20′ N	73°11.50′ W
40°28.00′ N	73°40.73′ W

(c) A traffic lane for eastbound traffic is established between the separation zone and a line connecting the following geographical positions:

Latitude	Longitude
40°25.05′ N	73°41.32′ W
40°19.20′ N	73°11.50′ W
40°19.33′ N	73°04.97′ W

[CGD 84–004, 52 FR 33589, Sept. 4, 1987]

§ 167.154 Off New York: South-eastern approach.

(a) A separation zone is established bounded by a line connecting the following geographical positions:

Latitude	Longitude
40°03.10′ N	73°17.93′ W
40°06.50′ N	73°22.73′ W
40°22.45′ N	73°43.55′ W
40°23.20′ N	73°42.70′ W

Latitude	Longitude
40°08.72′ N	73°20.10′ W
40°05.32′ N	73°15.28′ W

(b) A traffic lane for north-westbound traffic is established between the separation zone and a line connecting the following geographical positions:

Latitude	Longitude
40°08.98′ N	73°10.87′ W
40°12.42′ N	73°15.67′ W
40°24.02′ N	73°41.97′ W

(c) A traffic lane for south-eastbound traffic is established between the separation zone and a line connecting the following geographical positions:

Latitude	Longitude
40°21.82′ N	73°44.55′ W
40°02.80′ N	73°27.15′ W
39°59.43′ N	73°22.35′ W

[CGD 84–004, 52 FR 33589, Sept. 4, 1987, as amended by CGD 97–023, 62 FR 33365, June 19, 1997]

§ 167.155 Off New York: Southern approach.

(a) A separation zone is established bounded by a line connecting the following geographical positions:

Latitude	Longitude
39°45.70′ N	73°48.00′ W
40°20.63′ N	73°48.33′ W
40°20.87′ N	73°47.07′ W
39°45.70′ N	73°44.00′ W

(b) A traffic lane for northbound traffic is established between the separation zone and a line connecting the following geographical positions:

Latitude	Longitude
39°45.70′ N	73°37.70′ W
40°21.25′ N	73°45.85′ W

(c) A traffic lane for southbound traffic is established between the separation zone and a line connecting the following geographical positions:

Latitude	Longitude
40°20.53′ N	73°49.65′ W
39°45.70′ N	73°54.40′ W

[CGD 84–004, 52 FR 33589, Sept. 4, 1987, as amended by USCG–2010–0351, 75 FR 36287, June 25, 2010]

§ 167.170 Off Delaware Bay Approach Traffic Separation Scheme: General.

The Off Delaware Bay Approach Traffic Separation Scheme consists of four parts: an Eastern Approach, a Southeastern Approach, a Two-Way Traffic Route, and a Precautionary Area. The specific areas in the Off Delaware Bay Approach Traffic Separation Scheme and Precautionary Area are described in §§ 167.171 through 167.174.

[CGD 97–004, 65 FR 12945, Mar. 10, 2000]

§ 167.171 Off Delaware Bay: Eastern approach.

(a) A separation zone is established bounded by a line connecting the following geographic positions:

Latitude	Longitude
38°46.30′ N	74°34.45′ W
38°46.33′ N	74°55.75′ W
38°47.45′ N	74°55.40′ W
38°47.35′ N	74°34.50′ W

(b) A traffic lane for westbound traffic is established between the separation zone and a line connecting the following geographic positions:

Latitude	Longitude
38°48.32′ N	74°55.30′ W
38°49.80′ N	74°34.60′ W

(c) A traffic lane for eastbound traffic is established between the separation zone and a line connecting the following geographic positions:

Latitude	Longitude
38°45.45′ N	74°56.20′ W
38°44.45′ N	74°34.35′ W

[CGD 97–004, 65 FR 12945, Mar. 10, 2000]

§ 167.172 Off Delaware Bay: Southeastern approach.

(a) A separation zone is established bounded by a line connecting the following geographic positions:

Latitude	Longitude
38°27.00′ N	74°42.30′ W
38°43.40′ N	74°58.00′ W
38°44.20′ N	74°57.20′ W
38°27.60′ N	74°41.30′ W

(b) A traffic lane for north-westbound traffic is established between separation zone and a line connecting the following geographic positions:

Latitude	Longitude
38°28.80′ N	74°39.30′ W
38°45.10′ N	74°56.60′ W

(c) A traffic lane for south-eastbound traffic is established between the separation zone and a line connecting the following geographic positions:

Latitude	Longitude
38°42.80′ N	74°58.90′ W
38°27.00′ N	74°45.40′ W

[CGD 97–004, 65 FR 12945, Mar. 10, 2000]

§ 167.173 Off Delaware Bay: Two-Way Traffic Route.

The Two-Way Traffic Route is recommended for use predominantly by tug and tow traffic transiting to and from the northeast in order to separate such traffic from large, inbound vessel traffic.

(a) The Two-Way Traffic Route is bounded on the west and south by a line connecting the following geographic positions:

Latitude	Longitude
38°50.75′ N	75°03.40′ W
38°47.50′ N	75°01.80′ W
38°48.32′ N	74°55.30′ W
38°50.20′ N	74°49.73′ W
39°00.00′ N	74°40.23′ W

(b) The two-way traffic route is bounded on the east and north by a line connecting the following geographic positions:

Latitude	Longitude
39°00.00′ N	74°41.00′ W
38°50.48′ N	74°50.30′ W
38°48.80′ N	74°55.25′ W
38°48.33′ N	74°59.30′ W
38°49.10′ N	75°01.65′ W
38°51.27′ N	75°02.83′ W

[CGD 97–004, 65 FR 12945, Mar. 10, 2000]

§ 167.174 Off Delaware Bay: Precautionary area.

A precautionary area is established as follows: from 38°42.80′ N, 74°58.90′ W; then northerly by an arc of eight nautical miles centered at 38°48.90′ N, 75°05.60′ W to 38°48.32′ N, 74°55.30′ W; then westerly to 38°47.50′ N, 75°01.80′ W; then northerly to 38°50.75′ N, 75°03.40′ W; then northeasterly to 38°51.27′ N, 75°02.83′ W; then northerly to 38°54.80′ N, 75°01.60′ W; then westerly by an arc of 6.7 nautical miles centered at 38°48.90′ N, 75°05.60′ W to 38°55.53′ N, 75°05.87′ W; then southwesterly to 38°54.00′ N, 75°08.00′ W; then southerly to 38°46.60′ N, 75°03.55′ W; then southeasterly to 38°42.80′ N, 74°58.90′ W.

Datum: NAD 83.

[CGD 97–004, 65 FR 12946, Mar. 10, 2000]

§ 167.200 In the approaches to Chesapeake Bay Traffic Separation Scheme: General.

(a) The traffic separation scheme in the approaches to Chesapeake Bay consists of three parts: a Precautionary Area, an Eastern Approach, and a Southern Approach. The Southern Approach consists of inbound and outbound lanes for vessels drawing 12.8 meters (42 feet) of fresh water or less, separated by a deep-water (DW) route for inbound and outbound vessels with drafts exceeding 12.8 meters (42 feet) in fresh water and for naval aircraft carriers. Each part is defined geographically, using North American Datum 1983 (NAD 83), in §§ 167.201, 167.202, 167.203.

(b) All vessels approaching the Traffic Separation Scheme in the Approaches to Chesapeake Bay should use the appropriate inbound or outbound traffic lane.

[CGD 90–039, 59 FR 21937, Apr. 28, 1994, as amended by USCG–2010–0718, 75 FR 77534, Dec. 13, 2010]

§ 167.201 In the approaches to Chesapeake Bay: Precautionary area.

A precautionary area is established bounded by a circle with a two-mile radius, centered on the following geographic position:

Latitude	Longitude
36°56.13′ N	75°57.45′ W

[CGD 90–039, 59 FR 21937, Apr. 28, 1994, as amended by USCG–2010–0718, 75 FR 77534, Dec. 13, 2010]

§ 167.202 In the approaches to Chesapeake Bay: Eastern approach.

(a) A separation line is established connecting the following geographical positions:

Latitude	Longitude
36°57.50′ N	75°48.21′ W.
36°56.40′ N	75°52.40′ W.
36°56.40′ N	75°54.95′ W.

(b) A traffic lane for westbound traffic is established between the separation line and a line connecting the following geographical positions:

Latitude	Longitude
36°57.94′ N	75°48.41′ W.
36°56.90′ N	75°52.40′ W.
36°56.90′ N	75°55.14′ W.

(c) A traffic lane for eastbound traffic is established between the separation line and a line connecting the following geographical positions:

Latitude	Longitude
36°57.04′ N	75°48.01′ W.
36°55.88′ N	75°52.40′ W.
36°55.88′ N	75°54.95′ W.

[USCG–2010–0718, 75 FR 77534, Dec. 13, 2010, as amended by USCG–2011–0257, 76 FR 31838, June 2, 2011]

§ 167.203 In the approaches to Chesapeake Bay: Southern approach.

(a) A separation line connects the following geographical positions:

Latitude	Longitude
36°50.33′ N	75°46.29′ W.
36°52.90′ N	75°51.52′ W.
36°55.96′ N	75°54.97′ W.

(b) A separation line connects the following geographical positions:

Latitude	Longitude
36°55.11′ N	75°55.23′ W.
36°52.35′ N	75°52.12′ W.
36°49.70′ N	75°46.80′ W.

(c) A separation line connects the following geographical positions:

Latitude	Longitude
36°49.52′ N	75°46.94′ W.
36°52.18′ N	75°52.29′ W.
36°54.97′ N	75°55.43′ W.

(d) A separation line connects the following geographical positions:

Latitude	Longitude
36°54.44′ N	75°56.09′ W.
36°51.59′ N	75°52.92′ W.
36°48.87′ N	75°47.42′ W.

(e) A traffic lane for inbound traffic is established between the separation lines described in paragraphs (a) and (b) of this section.

(f) A traffic lane for outbound traffic is established between the separation lines described in paragraphs (c) and (d) of this section.

(g) A deep-water route is established between the separation lines described in paragraphs (b) and (c) of this section. The following vessels should use the deep-water route established in paragraph (g) of this section when bound for Chesapeake Bay from sea or to sea from Chesapeake Bay:

(1) Deep draft vessels (drafts greater than 13.5 meters/45 feet in fresh water); and

(2) Naval aircraft carriers.

(h) It is recommended that a vessel using the deep-water route established in paragraph (g) of this section—

(1) Announce its intention on VHF–FM Channel 16 as it approaches Chesapeake Bay Southern Approach Lighted Whistle Buoy CB on the south end, or Chesapeake Bay Junction Lighted Buoy CBJ on the north end of the route;

(2) Avoid, as far as practicable, overtaking other vessels operating in the deep-water route; and

(3) Keep as near to the outer limit of the route which lies on the vessel's starboard side as is safe and practicable.

(i) Vessels other than those listed in paragraph (d) of this section should not use the deep-water route.

[USCG–2010–0718, 75 FR 77535, Dec. 13, 2010]

§ 167.250 In the approaches to the Cape Fear River: General.

The traffic separation scheme (TSS) in the approaches to the Cape Fear River consists of two parts: A precautionary area and a TSS. The specific areas in the approaches to Narragansett Bay, RI, and Buzzards Bay, MA, are described in §§ 167.251 and

167.252. The geographic coordinates in §§ 167.251 and 167.252 are defined using North American Datum 1983 (NAD 83), which is equivalent to WGS 1984 datum.

[USCG–2010–0718, 75 FR 77535, Dec. 13, 2010]

§ 167.251 In the approaches to the Cape Fear River: Precautionary area.

A precautionary area is established bounded by a line connecting the following geographical positions: from 33°47.65′ N, 78°04.78′ W; to 33°48.50′ N, 78°04.27′ W; to 33°49.53′ N, 78°03.10′ W; to 33°48.00′ N, 78°01.00′ W; to 33°41.00′ N, 78°01.00′ W; to 33°41.00′ N, 78°04.00′ W; to 33°44.28′ N, 78°03.02′ W; then by an arc of 2 nautical miles radius, centered at 33°46.03′ N, 78°05.41′ W; then to the point of origin at 33°47.65′ N, 78°04.78′ W.

[USCG–2010–0718, 75 FR 77535, Dec. 13, 2010]

§ 167.252 In the approaches to the Cape Fear River: Traffic separation scheme.

(a) A traffic separation zone is established bounded by a line connecting the following geographical positions:

Latitude	Longitude
33°44.94′ N	78°04.81′ W.
33°32.75′ N	78°09.66′ W.
33°34.50′ N	78°14.70′ W.
33°45.11′ N	78°04.98′ W.

(b) A traffic lane for northbound traffic is established between the separation zone and a line connecting the following geographic positions:

Latitude	Longitude
33°32.75′ N	78°05.99′ W.
33°44.38′ N	78°03.77′ W.

(c) A traffic lane for southbound traffic is established between the separation zone and a line connecting the following geographic positions:

Latitude	Longitude
33°36.22′ N	78°18.00′ W.
33°46.03′ N	78°05.41′ W.

NOTE TO § 167.252: A pilot boarding area is located inside the precautionary area. Due to heavy ship traffic, mariners are advised not to anchor or linger in the precautionary area except to pick up or disembark a pilot.

[USCG–2010–0718, 75 FR 77535, Dec. 13, 2010]

ATLANTIC GULF COAST

§ 167.350 In the approaches to Galveston Bay Traffic Separation Scheme and precautionary areas.

(a) An inshore precautionary area bounded by a line connecting the following geographical positions:

Latitude	Longitude
(1) 29°18.10′ N	94°39.20′ W
(2) 29°16.10′ N	94°37.00′ W
(3) 29°18.00′ N	94°34.90′ W
(4) 29°19.40′ N	94°37.10′ W
(5) 29°19.80′ N	94°38.10′ W

(b) A traffic separation zone bounded by a line connecting the following geographical positions:

Latitude	Longitude
(6) 29°17.13′ N	94°35.86′ W
(7) 29°09.55′ N	94°25.80′ W
(8) 29°09.41′ N	94°25.95′ W
(9) 29°17.00′ N	94°36.00′ W

(c) A traffic lane for inbound (northwesterly heading) traffic is established between the separation zone and a line connecting the following geographical positions:

Latitude	Longitude
(3) 29°18.00′ N	94°34.90′ W
(10) 29°11.20′ N	94°24.00′ W

(d) A traffic lane for outbound (southeasterly heading) traffic is established between the separation zone and line connecting the following geographical positions:

Latitude	Longitude
(2) 29°16.10′ N	94°37.00′ W
(11) 29°07.70′ N	94°27.80′ W

(e) An offshore precautionary area bounded by a line connecting the following geographical positions:

Latitude	Longitude
(11) 29°07.70′ N	94°27.80′ W
(12) 29°06.40′ N	94°26.20′ W
(13) 29°06.40′ N	94°23.90′ W
(14) 29°09.10′ N	94°20.60′ W
(10) 29°11.20′ N	94°24.00′ W

NOTE: A pilot boarding area is located near the center of the inshore precautionary area.

Due to heavy vessel traffic, mariners are advised not to anchor or linger in this precautionary area except to pick up or disembark a pilot.

[CGD 81–080, 48 FR 36456, Aug. 11, 1983. Redesignated by CGD 84–004, 52 FR 33589, Sept. 4, 1987; CGD 89–019, 54 FR 28062, July 5, 1989; 54 FR 51972, Dec. 19, 1989]

PACIFIC WEST COAST

SOURCE: USCG–1999–5700, 65 FR 46605, July 31, 2000, unless otherwise noted.

§ 167.400 Off San Francisco Traffic Separation Scheme: General.

The Off San Francisco Traffic Separation Scheme consists of six parts: a Precautionary Area, a Northern Approach, a Southern Approach, a Western Approach, a Main Ship Channel, and an Area To Be Avoided. The specific areas in the Off San Francisco TSS and Precautionary Area are described in §§ 167.401 through 167.406 of this chapter. The geographic coordinates in §§ 167.401 through 167.406 are defined using North American Datum 1983 (NAD 83).

§ 167.401 Off San Francisco: Precautionary area.

(a)(1) A precautionary area is established bounded to the west by an arc of a circle with a radius of 6 miles centering upon geographical position 37°45.00′ N, 122°41.50′ W and connecting the following geographical positions:

Latitude	Longitude
37°42.70′ N	122°34.60′ W.
37°50.30′ N	122°38.00′ W.

(2) The precautionary area is bounded to the east by a line connecting the following geographic positions:

Latitude	Longitude
37°42.70′ N	122°34.60′ W.
37°45.90′ N	122°38.00′ W.
37°50.30′ N	122°38.00′ W

(b) A pilot boarding area is located near the center of the precautionary area described in paragraph (a) of this section. Due to heavy vessel traffic, mariners are advised not to anchor or linger in this precautionary area except to pick up or disembark a pilot.

§ 167.402 Off San Francisco: Northern approach.

(a) A separation zone is bounded by a line connecting the following geographical positions:

Latitude	Longitude
37°48.40′ N	122°47.60′ W
37°56.70′ N	123°03.70′ W
37°55.20′ N	123°04.90′ W
37°47.70′ N	122°48.20′ W

(b) A traffic lane for north-westbound traffic is established between the separation zone and a line connecting the following geographical positions:

Latitude	Longitude
37°49.20′ N	122°46.70′ W.
37°58.00′ N	123°02.70′ W.

(c) A traffic lane for south-eastbound traffic is established between the separation zone and a line connecting the following geographical positions:

Latitude	Longitude
37°53.90′ N	123°06.10′ W.
37°46.70′ N	122°48.70′ W.

§ 167.403 Off San Francisco: Southern approach.

(a) A separation zone is bounded by a line connecting the following geographical positions:

Latitude	Longitude
37°39.10′ N	122°40.40′ W.
37°27.00′ N	122°40.40′ W.
37°27.00′ N	122°43.00′ W.
37°39.10′ N	122°43.00′ W.

(b) A traffic lane for northbound traffic is established between the separation zone and a line connecting the following geographical positions:

Latitude	Longitude
37°39.30′ N	122°39.20′ W.
37°27.00′ N	122°39.20′ W.

(c) A traffic lane for southbound traffic is established between the separation zone and a line connecting the following geographical positions:

Latitude	Longitude
37°27.00′ N	122°44.30′ W.
37°39.40′ N	122°44.30′ W.

§ 167.404 Off San Francisco: Western approach.

(a) A separation zone is bounded by a line connecting the following geographical positions:

Latitude	Longitude
37°41.90′ N	122°48.00′ W.
37°38.10′ N	122°58.10′ W.
37°36.50′ N	122°57.30′ W.
37°41.10′ N	122°47.20′ W.

(b) A traffic lane for south-westbound traffic is established between the separation zone and a line connecting the following geographical positions:

Latitude	Longitude
37°42.80′ N	122°48.50′ W.
37°39.60′ N	122°58.80′ W.

(c) A traffic lane for north-eastbound traffic is established between the separation zone and a line connecting the following geographical positions:

Latitude	Longitude
37°35.00′ N	122°56.50′ W.
37°40.40′ N	122°46.30′ W.

§ 167.405 Off San Francisco: Main ship channel.

(a) A separation line connects the following geographical positions:

Latitude	Longitude
37°45.90′ N	122°38.00′ W.
37°47.00′ N	122°34.30′ W.
37°48.10′ N	122°31.00′ W.

(b) A traffic lane for eastbound traffic is established between the separation line and a line connecting the following geographical positions:

Latitude	Longitude
37°45.80′ N	122°37.70′ W.
37°47.80′ N	122°30.80′ W.

(c) A traffic lane for westbound traffic is established between the separation line and a line connecting the following geographical positions:

Latitude	Longitude
37°46.20′ N	122°37.90′ W.
37°46.90′ N	122°35.30′ W.
37°48.50′ N	122°31.30′ W.

§ 167.406 Off San Francisco: Area to be avoided.

A circular area to be avoided, with a radius of half of a nautical mile, is centered upon geographic position:

Latitude	Longitude
37°45.00′ N	122°41.50′ W.

§ 167.450 In the Santa Barbara Channel Traffic Separation Scheme: General.

The Traffic Separation Scheme in the Santa Barbara Channel is described in §§ 167.451 and 167.452. The geographic coordinates in §§ 167.451 and 167.452 are defined using North American Datum 1983 (NAD 83).

§ 167.451 In the Santa Barbara Channel: Between Point Vicente and Point Conception.

(a) A separation zone is bounded by a line connecting the following geographical positions:

Latitude	Longitude
34°20.90′ N	120°30.16′ W
34°04.00′ N	119°15.96′ W.
33°44.90′ N	118°35.75′ W.
33°43.20′ N	118°36.95′ W.
34°02.20′ N	119°17.46′ W.
34°18.90′ N	120°30.96′ W.

(b) A traffic lane for north-westbound traffic is established between the separation zone and a line connecting the following geographical positions:

Latitude	Longitude
34°21.80′ N	120°29.96′ W.
34°04.80′ N	119°15.16′ W.
33°45.80′ N	118°35.15′ W.

(c) A traffic lane for south-eastbound traffic is established between the separation zone and a line connecting the following geographical positions:

Latitude	Longitude
33°42.30′ N	118°37.55′ W.
34°01.40′ N	119°18.26′ W.
34°18.00′ N	120°31.16′ W.

§ 167.452 In the Santa Barbara Channel: Between Point Conception and Point Arguello.

(a) A separation zone is bounded by a line connecting the following geographical positions:

Latitude	Longitude
34°20.90′ N	120°30.16′ W.
34°18.90′ N	120°30.96′ W.
34°25.70′ N	120°51.81′ W.
34°23.75′ N	120°52.51′ W.

(b) A traffic lane for westbound traffic is established between the separation zone and a line connecting the following geographical positions:

Latitude	Longitude
34°21.80′ N	120°29.96′ W.
34°26.60′ N	120°51.51′ W.

(c) A traffic lane for eastbound traffic is established between the separation zone and a line connecting the following geographical positions:

Latitude	Longitude
34°18.00′ N	120°31.16′ W.
34°22.80′ N	120°52.76′ W.

§ 167.500 In the approaches to Los Angeles-Long Beach Traffic Separation Scheme: General.

The Traffic Separation Scheme in the approaches to Los Angeles-Long Beach consists of three parts: a Precautionary Area, a Western Approach, and a Southern Approach. The specific areas in the approaches to Los Angeles-Long Beach are described in §§ 167.501 through 167.503. The geographic coordinates in §§ 167.501 through 167.503 are defined using North American Datum 1983 (NAD 83).

[USCG–2000–7695, 65 FR 53913, Sept. 6, 2000]

§ 167.501 In the approaches to Los Angeles/Long Beach: Precautionary area.

(a) The precautionary area consists of the water area enclosed by the Los Angeles-Long Beach breakwater and a line connecting Point Fermin Light at 33°42.30′ N, 118°17.60′ W, with the following geographical positions:

Latitude	Longitude
33°35.50′ N	118°17.60′ W.
33°35.50′ N	118°09.00′ W.
33°37.70′ N	118°06.50′ W.
33°43.40′ N	118°10.80′ W.

(b) Pilot boarding areas are located within the precautionary area described in paragraph (a) of this section. Specific regulations pertaining to vessels operating in these areas are contained in 33 CFR 165.1109(d).

[USCG–2000–7695, 65 FR 53913, Sept. 6, 2000]

§ 167.502 In the approaches to Los Angeles-Long Beach: Western approach.

(a) A separation zone is bounded by a line connecting the following geographical positions:

Latitude	Longitude
33°37.70′ N	118°17.60′ W.
33°36.50′ N	118°17.60′ W.
33°36.50′ N	118°23.10′ W.
33°43.20′ N	118°36.90′ W.
33°44.90′ N	118°35.70′ W.
33°37.70′ N	118°20.90′ W.

(b) A traffic lane for northbound coastwise traffic is established between the separation zone and a line connecting the following geographical positions:

Latitude	Longitude
33°38.70′ N	118°17.60′ W.
33°38.70′ N	118°20.60′ W.
33°45.80′ N	118°35.10′ W.

(c) A traffic lane for southbound coastwise traffic is established between the separation zone and a line connecting the following geographical positions:

Latitude	Longitude
33°35.50′ N	118°17.60′ W.
33°35.50′ N	118°23.43′ W.
33°42.30′ N	118°37.50′ W.

[USCG–2000–7695, 65 FR 53913, Sept. 6, 2000]

§ 167.503 In the approaches to Los Angeles-Long Beach TSS: Southern approach.

(a) A separation zone is established bounded by a line connecting the following geographic positions:

Latitude	Longitude
33°35.50′ N	118°10.30′ W.
33°35.50′ N	118°12.75′ W.
33°19.70′ N	118°03.50′ W.
33°19.00′ N	118°05.60′ W.

(b) A traffic lane for northbound traffic is established between the separation zone and a line connecting the following geographical positions:

Latitude	Longitude
33°35.50′ N	118°09.00′ W.
33°20.00′ N	118°02.30′ W.

(c) A traffic lane for southbound traffic is established between the separation zone and a line connecting the following geographical positions:

Latitude	Longitude
33°35.50′ N	118°14.00′ W.
33°18.70′ N	118°06.75′ W.

[USCG–2000–7695, 65 FR 53913, Sept. 6, 2000]

§ 167.1300 In the approaches to the Strait of Juan de Fuca: General.

The traffic separation scheme for the approaches to the Strait of Juan de Fuca consists of three parts: the western approach, the southwestern approach, and precautionary area ''JF.'' These parts are described in §§ 167.1301 through 167.1303. The geographic coordinates in §§ 167.1301 through 167.1303 are defined using North American Datum (NAD 83).

[USCG–2002–12702, 75 FR 70826, Nov. 19, 2010]

§ 167.1301 In the approaches to the Strait of Juan de Fuca: Western approach.

In the western approach to the Strait of Juan de Fuca, the following are established:

(a) A separation zone bounded by a line connecting the following geographical positions:

Latitude	*Longitude*
48°30.10′ N	125°09.00′ W
48°30.10′ N	125°04.67′ W
48°29.11′ N	125°04.67′ W
48°29.11′ N	125°09.00′ W

(b) A traffic lane for westbound traffic between the separation zone and a line connecting the following geographical positions:

Latitude	*Longitude*
48°32.09′ N	125°04.67′ W
48°32.09′ N	125°08.98′ W

(c) A traffic lane for eastbound traffic between the separation zone and a line connecting the following geographical positions:

Latitude	*Longitude*
48°27.31′ N	125°09.00′ W
48°28.13′ N	125°04.67′ W

[USCG–2002–12702, 75 FR 70826, Nov. 19, 2010]

§ 167.1302 In the approaches to the Strait of Juan de Fuca: Southwestern approach.

In the southwestern approach to the Strait of Juan de Fuca, the following are established:

(a) A separation zone bounded by a line connecting the following geographical positions:

Latitude	*Longitude*
48°23.99′ N	125°06.54′ W
48°27.63′ N	125°03.38′ W
48°27.14′ N	125°02.08′ W
48°23.50′ N	125°05.26′ W

(b) A traffic lane for north-eastbound traffic between the separation zone and a line connecting the following geographical positions:

Latitude	*Longitude*
48°22.55′ N	125°02.80′ W
48°26.64′ N	125°00.81′ W

(c) A traffic lane for south-westbound traffic between the separation zone and a line connecting the following geographical positions:

Latitude	*Longitude*
48°28.13′ N	125°04.67′ W
48°24.94′ N	125°09.00′ W

[USCG–2002–12702, 75 FR 70826, Nov. 19, 2010]

§ 167.1303 In the approaches to the Strait of Juan de Fuca: Precautionary area "JF."

In the approaches to the Strait of Juan de Fuca, precautionary area ''JF'' is established and is bounded by a line connecting the following geographical positions:

Latitude	*Longitude*
48°32.09′ N	125°04.67′ W
48°30.10′ N	125°04.67′ W
48°29.11′ N	125°04.67′ W
48°28.13′ N	125°04.67′ W
48°27.63′ N	125°03.38′ W
48°27.14′ N	125°02.08′ W
48°26.64′ N	125°00.81′ W
48°28.13′ N	124°57.90′ W
48°29.11′ N	125°00.00′ W
48°30.10′ N	125°00.00′ W
48°32.09′ N	125°00.00′ W
48°32.09′ N	125°04.67′ W

[USCG–2002–12702, 75 FR 70826, Nov. 19, 2010]

§ 167.1310 In the Strait of Juan de Fuca: General.

The traffic separation scheme in the Strait of Juan de Fuca consists of five parts: the western lanes, southern lanes, northern lanes, eastern lanes, and precautionary area ''PA.'' These parts are described in §§ 167.1311 through 167.1315. The geographic coordinates in §§ 167.1311 through 167.1315 are defined using North American Datum (NAD 83).

[USCG–2002–12702, 75 FR 70827, Nov. 19, 2010]

§ 167.1311 In the Strait of Juan de Fuca: Western lanes.

In the western lanes of the Strait of Juan de Fuca, the following are established:

(a) A separation zone bounded by a line connecting the following geographical positions:

Latitude	*Longitude*
48°29.11′ N	125°00.00′ W
48°29.11′ N	124°43.78′ W
48°13.89′ N	123°54.84′ W
48°13.89′ N	123°31.98′ W
48°14.49′ N	123°31.98′ W
48°17.02′ N	123°56.46′ W
48°30.10′ N	124°43.50′ W
48°30.10′ N	125°00.00′ W

(b) A traffic lane for north-westbound traffic.

(1) The traffic lane is established between the separation zone and a line connecting the following geographical positions:

Latitude	*Longitude*
48°16.45′ N	123°30.42′ W
48°15.97′ N	123°33.54′ W
48°18.00′ N	123°56.07′ W
48°32.00′ N	124°46.57′ W
48°32.09′ N	124°49.90′ W
48°32.09′ N	125°00.00′ W

(2) An exit from this lane between points 48°32.00′ N, 124°46.57′ W and 48°32.09′ N, 124°49.90′ W. Vessel traffic may exit this lane at this location or may remain in the lane between points 48°32.09′ N, 124°49.90′ W and 48°32.09′ N, 125°00.00′ W en route to precautionary area ''JF,'' as described in § 167.1315.

(c) A traffic lane for south-eastbound traffic between the separation zone and a line connecting the following geographical positions:

Latitude	*Longitude*
48°28.13′ N	124°57.90′ W
48°28.13′ N	124°44.07′ W
48°12.90′ N	123°55.24′ W
48°12.94′ N	123°32.89′ W

[USCG–2002–12702, 75 FR 70827, Nov. 19, 2010]

§ 167.1312 In the Strait of Juan de Fuca: Southern lanes.

In the southern lanes of the Strait of Juan de Fuca, the following are established:

(a) A separation zone bounded by a line connecting the following geographical positions:

Latitude	*Longitude*
48°10.82′ N	123°25.44′ W
48°12.38′ N	123°28.68′ W
48°12.90′ N	123°28.68′ W
48°12.84′ N	123°27.46′ W
48°10.99′ N	123°24.84′ W

(b) A traffic lane for northbound traffic between the separation zone and a line connecting the following geographical positions:

Latitude	*Longitude*
48°11.24′ N	123°23.82′ W
48°12.72′ N	123°25.34′ W

(c) A traffic lane for southbound traffic between the separation zone and a line connecting the following geographical positions:

Latitude	*Longitude*
48°12.94′ N	123°32.89′ W
48°09.42′ N	123°24.24′ W

[USCG–2002–12702, 75 FR 70827, Nov. 19, 2010]

§ 167.1313 In the Strait of Juan de Fuca: Northern lanes.

In the northern lanes of the Strait of Juan de Fuca, the following are established:

(a) A separation zone bounded by a line connecting the following geographical positions:

Latitude	*Longitude*
48°21.15′ N	123°24.83′ W
48°16.16′ N	123°28.50′ W
48°15.77′ N	123°27.18′ W
48°20.93′ N	123°24.26′ W

(b) A traffic lane for southbound traffic between the separation zone and a line connecting the following geographical positions:

Latitude	*Longitude*
48°21.83′ N	123°25.56′ W
48°16.45′ N	123°30.42′ W

(c) A traffic lane for northbound traffic between the separation zone and a line connecting the following geographical positions:

Latitude	*Longitude*
48°20.93′ N	123°23.22′ W
48°15.13′ N	123°25.62′ W

[USCG–2002–12702, 75 FR 70827, Nov. 19, 2010]

§ 167.1314 In the Strait of Juan de Fuca: Eastern lanes.

In the eastern lanes of the Strait of Juan de Fuca, the following are established:

(a) A separation zone bounded by a line connecting the following geographical positions:

Latitude	*Longitude*
48°13.22′ N	123°15.91′ W
48°14.03′ N	123°25.98′ W
48°13.54′ N	123°25.86′ W
48°12.89′ N	123°16.69′ W

(b) A traffic lane for westbound traffic between the separation zone and a line connecting the following geographical positions:

Latitude	*Longitude*
48°14.27′ N	123°13.41′ W
48°14.05′ N	123°16.08′ W
48°15.13′ N	123°25.62′ W

(c) A traffic lane for eastbound traffic between the separation zone and a line connecting the following geographical positions:

Latitude	*Longitude*
48°12.72′ N	123°25.34′ W
48°12.34′ N	123°18.01′ W

[USCG–2002–12702, 75 FR 70827, Nov. 19, 2010]

§ 167.1315 In the Strait of Juan de Fuca: Precautionary area "PA."

In the Strait of Juan de Fuca, precautionary area ''PA'' is established and is bounded by a line connecting the following geographical positions:

Latitude	*Longitude*
48°12.94′ N	123°32.89′ W
48°13.89′ N	123°31.98′ W
48°14.49′ N	123°31.98′ W
48°16.45′ N	123°30.42′ W
48°16.16′ N	123°28.50′ W
48°15.77′ N	123°27.18′ W
48°15.13′ N	123°25.62′ W
48°14.03′ N	123°25.98′ W
48°13.54′ N	123°25.86′ W
48°12.72′ N	123°25.34′ W
48°12.84′ N	123°27.46′ W
48°12.90′ N	123°28.68′ W
48°12.94′ N	123°32.89′ W

[USCG–2002–12702, 75 FR 70827, Nov. 19, 2010]

§ 167.1320 In Puget Sound and its approaches: General.

The traffic separation scheme in Puget Sound and its approaches consists of three parts: Rosario Strait, approaches to Puget Sound other than Rosario Strait, and Puget Sound. These parts are described in §§ 167.1321 through 167.1323. The North American Datum (NAD 83) defines the geographic coordinates in §§ 167.1321 through 167.1323.

[USCG–2002–12702, 75 FR 70827, Nov. 19, 2010]

§ 167.1321 In Puget Sound and its approaches: Rosario Strait.

In Rosario Strait, the following are established:

(a) A separation zone bounded by a line connecting the following geographical positions:

Latitude	*Longitude*
48°48.98′ N	122°55.20′ W
48°46.76′ N	122°50.43′ W
48°45.56′ N	122°48.36′ W
48°45.97′ N	122°48.12′ W
48°46.39′ N	122°50.76′ W
48°48.73′ N	122°55.68′ W

(b) A traffic lane for northbound traffic located within the separation zone described in paragraph (a) of this section and a line connecting the following geographical positions:

Latitude	*Longitude*
48°49.49′ N	122°54.24′ W
48°47.14′ N	122°50.10′ W
48°46.35′ N	122°47.50′ W

(c) A traffic lane for southbound traffic located within the separation zone described in paragraph (a) of this section and a line connecting the following geographical positions:

Latitude	*Longitude*
48°44.95′ N	122°48.28′ W
48°46.76′ N	122°53.10′ W
48°47.93′ N	122°57.12′ W

(d) Precautionary area ''CA'' contained within a circle of radius 1.24 miles centered at geographical position 48°45.30′ N, 122°46.50′ W.

(e) A separation zone bounded by a line connecting the following geographical positions:

Latitude	*Longitude*
48°44.27′ N	122°45.53′ W
48°41.72′ N	122°43.50′ W
48°41.60′ N	122°43.82′ W
48°44.17′ N	122°45.87′ W

(f) A traffic lane for northbound traffic located within the separation zone described in paragraph (e) of this section and a line connecting the following geographical positions:

Latitude	*Longitude*
48°44.62′ N	122°44.96′ W
48°41.80′ N	122°42.70′ W

(g) A traffic lane for southbound traffic located within the separation zone described in paragraph (e) of this section and a line connecting the following geographical positions:

Latitude	*Longitude*
48°44.08′ N	122°46.65′ W
48°41.25′ N	122°44.37′ W

(h) Precautionary area ''C'' contained within a circle of radius 1.24 miles centered at geographical position 48°40.55′ N, 122°42.80′ W.

(i) A two-way route between the following geographical positions:

Latitude	*Longitude*
48°39.33′ N	122°42.73′ W
48°36.08′ N	122°45.00′ W
48°26.82′ N	122°43.53′ W
48°27.62′ N	122°45.53′ W
48°29.48′ N	122°44.77′ W
48°36.13′ N	122°45.80′ W
48°38.38′ N	122°44.20′ W
48°39.63′ N	122°44.03′ W

(j) Precautionary area ''RB'' bounded as follows:

(1) To the north by the arc of a circle of radius 1.24 miles centered on geographical position 48°26.38′ N, 122°45.27′ W and connecting the following geographical positions:

Latitude	*Longitude*
48°25.97′ N	122°47.03′ W
48°25.55′ N	122°43.93′ W

(2) To the south by a line connecting the following geographical positions:

Latitude	*Longitude*
48°25.97′ N	122°47.03′ W
48°24.62′ N	122°48.68′ W
48°23.75′ N	122°47.47′ W
48°25.20′ N	122°45.73′ W
48°25.17′ N	122°45.62′ W
48°24.15′ N	122°45.27′ W
48°24.08′ N	122°43.38′ W
48°25.55′ N	122°43.93′ W

[USCG–2002–12702, 75 FR 70827, Nov. 19, 2010]

§ 167.1322 In Puget Sound and its approaches: Approaches to Puget Sound other than Rosario Strait.

(a) The traffic separation scheme in the approaches to Puget Sound other than Rosario Strait consists of a northeast/southwest approach, a northwest/southeast approach, a north/south approach, and an east/west approach and connecting precautionary areas.

(b) In the northeast/southwest approach consisting of two separation zones, two precautionary areas (''RA'' and ''ND''), and four traffic lanes, the following are established:

(1) A separation zone that connects with precautionary area ''RA,'' as described in paragraph (b)(2) of this section, and is bounded by a line connecting the following geographical positions:

Latitude	*Longitude*
48°24.13′ N	122°47.97′ W
48°20.32′ N	122°57.02′ W
48°20.53′ N	122°57.22′ W
48°24.32′ N	122°48.22′ W

(2) Precautionary area ''RA,'' which is contained within a circle of radius 1.24 miles centered at 48°19.77′ N, 122°58.57′ W.

(3) A separation zone that connects with precautionary area ''RA,'' as described in paragraph (b)(2) of this section, and is bounded by a line connecting the following geographical positions:

Latitude	*Longitude*
48°16.25′ N	123°06.58′ W
48°16.57′ N	123°06.58′ W
48°19.20′ N	123°00.35′ W
48°19.00′ N	123°00.17′ W

(4) A traffic lane for northbound traffic that connects with precautionary area ''RA,'' as described in paragraph

(b)(2) of this section, and is located between the separation zone described in paragraph (b)(1) of this section and a line connecting the following geographical positions:

Latitude	*Longitude*
48°23.75′ N	122°47.47′ W
48°19.80′ N	122°56.83′ W

(5) A traffic lane for northbound traffic that connects with precautionary area ''RA,'' as described in paragraph (b)(2) of this section, and is located between the separation zone described in paragraph (b)(3) of this section and a line connecting the following geographical positions:

Latitude	*Longitude*
48°15.70′ N	123°06.58′ W
48°18.67′ N	122°59.57′ W

(6) A traffic lane for southbound traffic that connects with precautionary area ''RA,'' as described in paragraph (b)(2) of this section, and is located between the separation zone described in paragraph (b)(1) of this section and a line connecting the following geographical positions:

Latitude	*Longitude*
48°24.62′ N	122°48.68′ W
48°20.85′ N	122°57.80′ W

(7) A traffic lane for southbound traffic that connects with precautionary area ''RA,'' as described in paragraph (b)(2) of this section, and is located between the separation zone described in paragraph (b)(3) of this section and a line connecting the following geographical positions:

Latitude	*Longitude*
48°19.70′ N	123°00.53′ W
48°17.15′ N	123°06.57′ W

(8) Precautionary area ''ND,'' which is bounded by a line connecting the following geographical positions:

Latitude	*Longitude*
48°11.00′ N	123°06.58′ W
48°17.15′ N	123°06.57′ W
48°14.27′ N	123°13.41′ W
48°12.34′ N	123°18.01′ W
48°12.72′ N	123°25.34′ W
48°11.24′ N	123°23.82′ W
48°10.82′ N	123°25.44′ W
48°09.42′ N	123°24.24′ W
48°08.39′ N	123°24.24′ W
48°11.00′ N	123°06.58′ W

(c) In the northwest/southeast approach consisting of two separation zones, two precautionary areas (''RA'' and ''SA''), and four traffic lanes, the following are established:

(1) A separation zone that connects with precautionary area ''RA,'' as described in paragraph (b)(2) of this section, and is bounded by a line connecting the following geographical positions:

Latitude	*Longitude*
48°28.72′ N	123°08.53′ W
48°25.43′ N	123°03.88′ W
48°22.88′ N	123°00.82′ W
48°20.93′ N	122°59.30′ W
48°20.82′ N	122°59.62′ W
48°22.72′ N	123°01.12′ W
48°25.32′ N	123°04.30′ W
48°28.39′ N	123°08.64′ W

(2) A separation zone that connects with precautionary area ''RA,'' as described in paragraph (b)(2) of this section, and is bounded by a line connecting the following geographical positions:

Latitude	*Longitude*
48°18.83′ N	122°57.48′ W
48°13.15′ N	122°51.33′ W
48°13.00′ N	122°51.62′ W
48°18.70′ N	122°57.77′ W

(3) A traffic lane for northbound traffic that connects with precautionary ''RA,'' as described in paragraph (b)(2) of this section, and is located between the separation zone described in paragraph (c)(1) of this section and a line connecting the following geographical positions:

Latitude	*Longitude*
48°29.28′ N	123°08.35′ W
48°25.60′ N	123°03.13′ W
48°23.20′ N	123°00.20′ W
48°21.00′ N	122°58.50′ W

(4) A traffic lane for northbound traffic that connects with precautionary area ''RA,'' as described in paragraph (b)(2) of this section, and is located between the separation zone described in paragraph (c)(2) of this section and a line connecting the following geographical positions:

Latitude	*Longitude*
48°19.20′ N	122°57.03′ W
48°13.35′ N	122°50.63′ W

(5) A traffic lane for southbound traffic that connects with precautionary ''RA,'' as described in paragraph (b)(2) of this section, and is located between the separation zone described in paragraph (c)(1) of this section and a line connecting the following geographical positions:

Latitude	*Longitude*
48°27.86′ N	123°08.81′ W
48°25.17′ N	123°04.98′ W
48°22.48′ N	123°01.73′ W
48°20.47′ N	123°00.20′ W

(6) A traffic lane for southbound traffic connecting with precautionary area ''RA,'' as described in paragraphs (b)(2) of this section, and is located between the separation zone described in paragraph (c)(2) of this section and a line connecting the following geographical positions:

Latitude	*Longitude*
48°18.52′ N	122°58.50′ W
48°12.63′ N	122°52.15′ W

(7) Precautionary area ''SA,'' which is contained within a circle of radius 2 miles centered at geographical position 48°11.45′ N, 122°49.78′ W.

(d) In the north/south approach between precautionary areas ''RB'' and ''SA,'' as described in paragraph (b)(2) and (c)(7) of this section, respectively, the following are established:

(1) A separation zone bounded by a line connecting the following geographical positions:

Latitude	*Longitude*
48°24.15′ N	122°44.08′ W
48°13.33′ N	122°48.78′ W
48°13.38′ N	122°49.15′ W
48°24.17′ N	122°44.48′ W

(2) A traffic lane for northbound traffic located between the separation zone described in paragraph (d)(1) of this section and a line connecting the following geographical positions:

Latitude	*Longitude*
48°24.08′ N	122°43.38′ W
48°13.10′ N	122°48.12′ W

(3) A traffic lane for southbound traffic located between the separation zone described in paragraph (d)(1) of this section and a line connecting the following geographical positions:

Latitude	*Longitude*
48°24.15′ N	122°45.27′ W
48°13.43′ N	122°49.90′ W

(e) In the east/west approach between precautionary areas ''ND'' and ''SA,'' as described in paragraphs (b)(8) and (c)(7) of this section, respectively, the following are established:

(1) A separation zone bounded by a line connecting the following geographical positions:

Latitude	*Longitude*
48°11.50′ N	122°52.73′ W
48°11.73′ N	122°52.70′ W
48°12.48′ N	123°06.58′ W
48°12.23′ N	123°06.58′ W

(2) A traffic lane for northbound traffic between the separation zone described in paragraph (e)(1) of this section and a line connecting the following geographical positions:

Latitude	*Longitude*
48°12.22′ N	122°52.52′ W
48°12.98′ N	123°06.58′ W

(3) A traffic lane for southbound traffic between the separation zone described in paragraph (e)(1) of this section and a line connecting the following geographical positions:

Latitude	*Longitude*
48°11.73′ N	123°06.58′ W
48°10.98′ N	122°52.65′ W

[USCG–2002–12702, 75 FR 70827, Nov. 19, 2010]

§ 167.1323 In Puget Sound and its approaches: Puget Sound.

The traffic separation scheme in Puget Sound consists of six separation zones and two traffic lanes connected by six precautionary areas. The following are established:

(a) A separation zone bounded by a line connecting the following geographical positions:

Latitude	*Longitude*
48°11.08′ N	122°46.88′ W
48°06.85′ N	122°39.52′ W
48°02.48′ N	122°38.17′ W
48°02.43′ N	122°38.52′ W
48°06.72′ N	122°39.83′ W
48°10.82′ N	122°46.98′ W

(b) Precautionary area ''SC,'' which is contained within a circle of radius 0.62 miles, centered at 48°01.85′ N, 122°38.15′ W.

(c) A separation zone bounded by a line connecting the following geographical positions:

Latitude	*Longitude*
48°01.40′ N	122°37.57′ W
47°57.95′ N	122°34.67′ W
47°55.85′ N	122°30.22′ W
47°55.67′ N	122°30.40′ W
47°57.78′ N	122°34.92′ W
48°01.28′ N	122°37.87′ W

(d) Precautionary area ''SE,'' which is contained within a circle of radius 0.62 miles, centered at 47°55.40′ N, 122°29.55′ W.

(e) A separation zone bounded by a line connecting the following geographical positions:

Latitude	*Longitude*
47°54.85′ N	122°29.18′ W
47°46.52′ N	122°26.30′ W
47°46.47′ N	122°26.62′ W
47°54.80′ N	122°29.53′ W

(f) Precautionary area ''SF,'' which is contained within a circle of radius 0.62 miles, centered at 47°45.90′ N, 122°26.25′ W.

(g) A separation zone bounded by a line connecting the following geographical positions:

Latitude	*Longitude*
47°45.20′ N	122°26.25′ W
47°40.27′ N	122°27.55′ W
47°40.30′ N	122°27.88′ W
47°45.33′ N	122°26.60′ W

(h) Precautionary area ''SG,'' which is contained within a circle of radius 0.62 miles, centered at 47°39.68′ N, 122°27.87′ W.

(i) A separation zone bounded by a line connecting the following geographical positions:

Latitude	*Longitude*
47°39.12′ N	122°27.62′ W
47°35.18′ N	122°27.08′ W
47°35.17′ N	122°27.35′ W
47°39.08′ N	122°27.97′ W

(j) Precautionary area ''T,'' which is contained within a circle of radius 0.62 miles, centered at 47°34.55′ N, 122°27.07′ W.

(k) A separation zone bounded by a line connecting the following geographical positions:

Latitude	*Longitude*
47°34.02′ N	122°26.70′ W
47°26.92′ N	122°24.10′ W
47°23.07′ N	122°20.98′ W
47°19.78′ N	122°26.58′ W
47°19.98′ N	122°26.83′ W
47°23.15′ N	122°21.45′ W
47°26.85′ N	122°24.45′ W
47°33.95′ N	122°27.03′ W

(l) Precautionary area ''TC,'' which is contained within a circle of radius 0.62 miles, centered at 47°19.48′ N, 122°27.38′ W.

(m) A traffic lane for northbound traffic that connects with precautionary areas ''SC,'' ''SE,'' ''SF,'' ''SG,'' ''T,'' and ''TC,'' as described in paragraphs (b), (d), (f), (h), (j), and (k) of this section, respectively, and is located between the separation zones described in paragraphs (a), (c), (e), (g), (i), and (k) of this section, respectively, and a line connecting the following geographical positions:

Latitude	*Longitude*
48°11.72′ N	122°46.83′ W
48°07.13′ N	122°38.83′ W
48°02.10′ N	122°37.32′ W
47°58.23′ N	122°34.07′ W
47°55.83′ N	122°28.80′ W
47°45.92′ N	122°25.33′ W
47°39.68′ N	122°26.95′ W
47°34.65′ N	122°26.18′ W
47°27.13′ N	122°23.40′ W
47°23.33′ N	122°20.37′ W
47°22.67′ N	122°20.53′ W
47°19.07′ N	122°26.75′ W

(n) A traffic lane for southbound traffic that connects with precautionary areas ''SC,'' ''SE,'' ''SF,'' ''SG,'' ''T,'' and ''TC,'' as described in paragraphs (b), (d), (f), (h), (j), and (k) of this section, respectively, and is located between the separation zones described in paragraphs (a), (c), (e), (g), (i), and (k) of this section, respectively, and a line connecting the following geographical positions:

Latitude	*Longitude*
48°10.15′ N	122°47.58′ W
48°09.35′ N	122°45.55′ W
48°06.45′ N	122°40.52′ W
48°01.65′ N	122°30.03′ W
47°57.47′ N	122°35.45′ W
47°55.07′ N	122°30.35′ W
47°45.90′ N	122°27.18′ W
47°39.70′ N	122°28.78′ W
47°34.47′ N	122°27.98′ W
47°26.63′ N	122°25.12′ W
47°23.25′ N	122°22.42′ W

47°20.00′ N	122°27.90′ W

[USCG–2002–12702, 75 FR 70827, Nov. 19, 2010]

§ 167.1330 In Haro Strait, Boundary Pass, and the Strait of Georgia: General.

The traffic separation scheme in Haro Strait, Boundary Pass, and the Strait of Georgia consists of a series of traffic separation schemes, two-way routes, and five precautionary areas. These parts are described in §§ 167.1331 and 167.1332. The geographic coordinates in §§ 167.1331 and 167.1332 are defined using North American Datum (NAD 83).

[USCG–2002–12702, 75 FR 70830, Nov. 19, 2010]

§ 167.1331 In Haro Strait and Boundary Pass.

In Haro Strait and Boundary Pass, the following are established:

(a) Precautionary area ''V,'' which is bounded by a line connecting the following geographical positions:

Latitude	*Longitude*
48°23.15′ N	123°21.12′ W
48°23.71′ N	123°23.88′ W
48°21.83′ N	123°25.56′ W
48°21.15′ N	123°24.83′ W
48°20.93′ N	123°24.26′ W
48°20.93′ N	123°23.22′ W
48°21.67′ N	123°21.12′ W
48°23.15′ N	123°21.12′ W

(b) A separation zone that connects with precautionary area ''V,'' as described in paragraph (a) of this section, and is bounded by a line connecting the following geographical positions:

Latitude	*Longitude*
48°22.25′ N	123°21.12′ W
48°22.25′ N	123°17.95′ W
48°23.88′ N	123°13.18′ W
48°24.30′ N	123°13.00′ W
48°22.55′ N	123°18.05′ W
48°22.55′ N	123°21.12′ W

(c) A traffic lane for eastbound traffic located between the separation zone described in paragraph (b) of this section and a line connecting the following geographical positions:

Latitude	*Longitude*
48°21.67′ N	123°21.12′ W
48°21.67′ N	123°17.70′ W
48°23.10′ N	123°13.50′ W

(d) A traffic lane for westbound traffic located between the separation zone described in paragraph (b) of this section and a line connecting the following geographical positions:

Latitude	*Longitude*
48°25.10′ N	123°12.67′ W
48°23.15′ N	123°18.30′ W
48°23.15′ N	123°21.12′ W

(e) Precautionary area ''DI,'' which is bounded by a line connecting the following geographical positions:

Latitude	*Longitude*
48°23.10′ N	123°13.50′ W
48°24.30′ N	123°09.95′ W
48°26.57′ N	123°09.22′ W
48°25.10′ N	123°12.67′ W
48°23.10′ N	123°13.50′ W

(f) A separation zone bounded by a line connecting the following geographical positions:

Latitude	*Longitude*
48°25.96′ N	123°10.65′ W
48°27.16′ N	123°10.25′ W
48°28.77′ N	123°10.84′ W
48°29.10′ N	123°11.59′ W
48°25.69′ N	123°11.28′ W

(g) A traffic lane for northbound traffic located between the separation zone described in paragraph (f) of this section and a line connecting the following geographical positions:

Latitude	*Longitude*
48°26.57′ N	123°09.22′ W
48°27.86′ N	123°08.81′ W

(h) A traffic lane for southbound traffic located between the separation zone described in paragraph (e) of this section and a line connecting the following geographical positions:

Latitude	*Longitude*
48°29.80′ N	123°13.15′ W
48°25.10′ N	123°12.67′ W

(i) Precautionary area ''HS,'' which is bounded by a line connecting the following geographical positions:

Latitude	*Longitude*
48°27.86′ N	123°08.81′ W
48°29.28′ N	123°08.35′ W
48°30.55′ N	123°10.12′ W
48°31.60′ N	123°10.65′ W
48°32.83′ N	123°13.45′ W
48°29.80′ N	123°13.15′ W
48°27.86′ N	123°08.81′ W

(j) A two-way route between the following geographical positions:

Latitude	*Longitude*
48°31.60′ N	123°10.65′ W
48°35.21′ N	123°12.61′ W
48°38.37′ N	123°12.36′ W
48°39.41′ N	123°13.14′ W
48°39.41′ N	123°16.06′ W
48°32.83′ N	123°13.45′ W

(k) Precautionary area ''TP,'' which is bounded by a line connecting the following geographical positions:

Latitude	*Longitude*
48°41.06′ N	123°11.04′ W
48°42.23′ N	123°11.35′ W
48°43.80′ N	123°10.77′ W
48°43.20′ N	123°16.06′ W
48°39.41′ N	123°16.06′ W
48°39.32′ N	123°13.14′ W
48°39.76′ N	123°11.84′ W

(l) A two-way route between the following geographical positions:

Latitude	*Longitude*
48°42.23′ N	123°11.35′ W
48°45.51′ N	123°01.82′ W
48°47.78′ N	122°59.12′ W
48°48.19′ N	123°00.84′ W
48°46.43′ N	123°03.12′ W
48°43.80′ N	123°10.77′ W

[USCG–2002–12702, 75 FR 70830, Nov. 19, 2010]

§ 167.1332 In the Strait of Georgia.

In the Strait of Georgia, the following are established:

(a) Precautionary area ''GS,'' which is bounded by a line connecting the following geographical positions:

Latitude	*Longitude*
48°52.30′ N	123°07.44′ W
48°54.81′ N	123°03.66′ W
48°49.49′ N	122°54.24′ W
48°47.93′ N	122°57.12′ W
48°47.78′ N	122°59.12′ W
48°48.19′ N	123°00.84′ W
48°52.30′ N	123°07.44′ W

(b) A separation zone bounded by a line connecting the following geographical positions:

Latitude	*Longitude*
48°53.89′ N	123°05.04′ W
48°56.82′ N	123°10.08′ W
48°56.30′ N	123°10.80′ W
48°53.39′ N	123°05.70′ W

(c) A traffic lane for north-westbound traffic located between the separation zone described in paragraph (b) of this section and a line connecting the following geographical positions:

Latitude	*Longitude*
48°54.81′ N	123°03.66′ W
48°57.68′ N	123°08.76′ W

(d) A traffic lane for south-eastbound traffic between the separation zone described in paragraph (b) of this section and a line connecting the following geographical positions:

Latitude	*Longitude*
48°55.34′ N	123°12.30′ W
48°52.30′ N	123°07.44′ W

(e) Precautionary area ''PR,'' which is bounded by a line connecting the following geographical positions:

Latitude	*Longitude*
48°55.34′ N	123°12.30′ W
48°57.68′ N	123°08.76′ W
49°02.20′ N	123°16.28′ W
49°00.00′ N	123°19.69′ W

(f) A separation zone bounded by a line connecting the following geographical positions:

Latitude	*Longitude*
49°01.39′ N	123°17.53′ W
49°03.84′ N	123°21.30′ W
49°03.24′ N	123°22.41′ W
49°00.75′ N	123°18.52′ W

(g) A traffic lane for north-westbound traffic located between the separation zone described in paragraph (f) of this section and a line connecting the following geographical positions:

Latitude	*Longitude*
49°02.20′ N	123°16.28′ W
49°04.52′ N	123°20.04′ W

(h) A traffic lane for south-eastbound traffic between the separation zone described in paragraph (f) of this section and a line connecting the following geographical positions:

Latitude	*Longitude*
49°02.51′ N	123°23.76′ W
49°00.00′ N	123°19.69′ W

[USCG–2002–12702, 75 FR 70830, Nov. 19, 2010]

§ 167.1700 In Prince William Sound: General.

The Prince William Sound Traffic Separation Scheme consists of four parts: Prince William Sound Traffic Separation Scheme, Valdez Arm Traffic Separation Scheme, and two precautionary areas. These parts are described in §§ 167.1701 through 167.1703. The geographic coordinates in §§ 167.1701 through 167.1703 are defined using North American Datum 1983 (NAD 83).

[USCG–2001–10254, 67 FR 53743, Aug. 19, 2002]

§ 167.1701 In Prince William Sound: Precautionary areas.

(a) *Cape Hinchinbrook*. A precautionary area is established and is bounded by a line connecting the following geographical positions:

Latitude	Longitude
60°20.59′ N	146°48.18′ W
60°12.67′ N	146°40.43′ W
60°11.01′ N	146°28.65′ W
60°05.47′ N	146°00.01′ W
60°00.81′ N	146°03.53′ W
60°05.44′ N	146°27.58′ W
59°51.80′ N	146°37.51′ W
59°53.52′ N	146°46.84′ W
60°07.76′ N	146°36.24′ W
60°11.51′ N	146°46.64′ W
60°20.60′ N	146°54.31′ W

(b) *Bligh Reef*. A precautionary area is established of radius 1.5 miles centered at geographical position 60°49.63′ N, 147°01.33′ W.

(c) *Pilot boarding area*. A pilot boarding area located near the center of the Bligh Reef precautionary area is established. Regulations for vessels operating in these areas are in § 165.1109(d) of this chapter.

[USCG–2001–10254, 67 FR 53743, Aug. 19, 2002]

§ 167.1702 In Prince William Sound: Prince William Sound Traffic Separation Scheme.

The Prince William Sound Traffic Separation Scheme consists of the following:

(a) A separation zone bounded by a line connecting the following geographical positions:

Latitude	Longitude
60°20.77′ N	146°52.31′ W
60°48.12′ N	147°01.78′ W
60°48.29′ N	146°59.77′ W
60°20.93′ N	146°50.32′ W

(b) A traffic lane for northbound traffic between the separation zone and a line connecting the following geographical positions:

Latitude	Longitude
60°20.59′ N	146°48.18′ W
60°49.49′ N	146°58.19′ W

(c) A traffic lane for southbound traffic between the separation zone and a line connecting the following geographical positions:

Latitude	Longitude
60°49.10′ N	147°04.19′ W
60°20.60′ N	146°54.31′ W

[USCG–2001–10254, 67 FR 53743, Aug. 19, 2002]

§ 167.1703 In Prince William Sound: Valdez Arm Traffic Separation Scheme.

The Valdez Arm Traffic Separation Scheme consists of the following:

(a) A separation zone bounded by a line connecting the following geographical positions:

Latitude	Longitude
60°51.08′ N	147°00.33′ W
60°58.60′ N	146°48.10′ W
60°58.30′ N	146°47.10′ W
60°50.45′ N	146°58.75′ W

(b) A traffic lane for northbound traffic between the separation zone and a line connecting the following geographical positions:

Latitude	Longitude
60°49.39′ N	146°58.19′ W
60°58.04′ N	146°46.52′ W

(c) A traffic lane for southbound traffic between the separation zone and a line connecting the following geographical positions:

Latitude	Longitude
60°58.93′ N	146°48.86′ W
60°50.61′ N	147°03.60′ W

[USCG–2001–10254, 67 FR 53743, Aug. 19, 2002]

PART 168—ESCORT REQUIREMENTS FOR CERTAIN TANKERS

Sec.
168.01 Purpose.
168.05 Definitions.
168.10 Responsibilities.
168.20 Applicable vessels.
168.30 Applicable cargoes.
168.40 Applicable waters and number of escort vessels.
168.50 Performance and operational requirements.
168.60 Pre-escort conference.

AUTHORITY: Section 4116(c), Pub. L. 101–380, 104 Stat. 520 (46 U.S.C. 3703 note); section 711 Pub. L. 111–281, 124 Stat 2905; Department of Homeland Security Delegation No. 170.1, para. 2(82).

SOURCE: CGD 91–202, 59 FR 42968, Aug. 19, 1994, unless otherwise noted.

§ 168.01 Purpose.

(a) This part prescribes regulations in accordance with section 4116(c) of the Oil Pollution Act of 1990 (OPA 90) (Pub. L. 101–380), as amended by section 711 of the Coast Guard Authorization Act of 2010 (Pub. L. 111–281). The regulations will reduce the risk of oil spills from laden, single hull and double hull tankers over 5,000 GT by requiring that these tankers be escorted by at least two suitable escort vessels in applicable waters, as defined in § 168.40. The escort vessels will be immediately available to influence the tankers' speed and course in the event of a steering or propulsion equipment failure, thereby reducing the possibility of groundings or collisions.

(b) The regulations in this part establish minimum escort vessel requirements. Nothing in these regulations should be construed as relieving the master of a tanker from the duty to operate the vessel in a safe and prudent manner, taking into account the navigational constraints of the waterways to be traversed, other vessel traffic, and anticipated weather, tide, and sea conditions, which may require reduced speeds, greater assistance from escort vessels, or other operational precautions.

[CGD 91–202, 59 FR 42968, Aug. 19, 1994, as amended by USCG–2012–0975, 78 FR 50339, Aug. 19, 2013]

§ 168.05 Definitions.

As used in this part—

Disabled tanker means a tanker experiencing a loss of propulsion or steering control.

Double hull tanker means any self-propelled tank vessel that is constructed with both double bottom and double sides in accordance with the provisions of 33 CFR 157.10d.

Escort transit means that portion of the tanker's voyage through waters where escort vessels are required.

Escort vessel means any vessel that is assigned and dedicated to a tanker during the escort transit, and that is fendered and outfitted with towing gear as appropriate for its role in an emergency response to a disabled tanker.

Laden means transporting in bulk any quantity of applicable cargo, except for clingage and residue in otherwise empty cargo tanks.

Single hull tanker means any self-propelled tank vessel that is not constructed with both double bottom and double sides in accordance with the provisions of 33 CFR 157.10d.

Tanker master means the licensed onboard person in charge of the tanker.

Tanker owner or operator means the owner or shoreside organization (individual, corporation, partnership, or association), including a demise charterer, responsible for the overall management and operation of the tanker.

[CGD 91–202, 59 FR 42968, Aug. 19, 1994, as amended by USCG–2012–0975, 78 FR 50340, Aug. 19, 2013]

§ 168.10 Responsibilities.

(a) The tanker owner or operator shall:

(1) select escort vessels that can meet the performance requirements of this part; and

(2) inform the tanker master of the performance capabilities of the selected escort vessels. This information must be provided to the master before beginning the escort transit.

(b) The tanker master shall operate the tanker within the performance capabilities of the escort vessels, taking into account speed, sea and weather conditions, navigational considerations, and other factors that may

change or arise during the escort transit.

(c) In an emergency, the tanker master may deviate from the requirements of this part to the extent necessary to avoid endangering persons, property, or the environment, but shall immediately report the deviation to the cognizant Coast Guard Captain of the Port (COTP).

§ 168.20 Applicable vessels.

The requirements of this part apply to the following laden tankers of 5,000 gross tons or more:

(a) All single hull tankers on the waters listed in § 168.40(a) and (b); and

(b) All double hull tankers on the waters listed in § 168.40(a).

[USCG–2012–0975, 78 FR 50340, Aug. 19, 2013]

§ 168.30 Applicable cargoes.

The requirements of this part apply to any petroleum oil listed in 46 CFR Table 30.25–1 as a pollution category I cargo.

§ 168.40 Applicable waters and number of escort vessels.

The requirements of this part apply to the following waters:

(a) *Prince William Sound:* Each tanker to which this part applies must be escorted by at least two escort vessels in those navigable waters of the United States within Prince William Sound, Alaska, and the adjoining tributaries, bays, harbors, and ports, including the navigable waters of the United States within a line drawn from Cape Hinchinbrook Light, to Seal Rocks Light, to a point on Montague Island at 60°14.6′ North, 146°59′ West, and the waters of Montague Strait east of a line between Cape Puget and Cape Cleare.

(b) *Puget Sound and certain associated waters:* Each tanker to which this part applies must be escorted by at least two escort vessels in those navigable waters of the United States and Washington State east of a line connecting New Dungeness Light with Discovery Island Light and all points in the Puget Sound area north and south of these lights. This area includes all the navigable waters of the United States within Haro Strait, Rosario Strait, the Strait of Georgia, Puget Sound, and Hood Canal, as well as those portions of the Strait of Juan de Fuca east of the New Dungeness-Discovery Island line.

§ 168.50 Performance and operational requirements.

(a) Except as provided in paragraph (c) of § 168.10, at all times during the escort transit each tanker to which this part applies:

(1) Must be accompanied by escort vessels that meet the performance requirements of paragraph (b) of this section (but not less than the number of escorts required by § 168.40).

(2) Must have the escort vessels positioned relative to the tanker such that timely response to a propulsion or steering failure can be effected.

(3) Must not exceed a speed beyond which the escort vessels can reasonably be expected to safely bring the tanker under control within the navigational limits of the waterway, taking into consideration ambient sea and weather conditions, surrounding vessel traffic, hazards, and other factors that may reduce the available sea room.

(b) The escort vessels, acting singly or jointly in any combination as needed, and considering their applied force vectors on the tanker's hull, must be capable of—

(1) Towing the tanker at 4 knots in calm conditions, and holding it in steady position against a 45-knot headwind;

(2) [Reserved]

(3) Holding the tanker on a steady course against a 35-degree locked rudder at a speed of 6 knots; and

(4) Turning the tanker 90 degrees, assuming a free-swinging rudder and a speed of 6 knots, within the same distance (advance and transfer) that it could turn itself with a hard-over rudder.

[CGD 91–202, 59 FR 42968, Aug. 19, 1994, as amended at 70 FR 55730, Sept. 23, 2005]

§ 168.60 Pre-escort conference.

(a) Before commencing an escort transit, the tanker master shall confer, by radio or in person, with the tanker pilot and the masters of the escort vessels regarding the escort operation.

(b) The purpose of the pre-escort conference is for all parties to plan and

discuss particulars of the escort transit.

(c) At a minimum, the following topics must be addressed during the pre-escort conference:

(1) The destination, route, planned speed, other vessel traffic, anticipated weather, tide, and sea conditions, and other navigational considerations;

(2) The type and operational status of communication, towing, steering, and propulsion equipment on the tanker and escort vessels;

(3) The relative positioning and reaction time for the escort vessels to move into assist positions, including, if appropriate, pre-tethering the escort vessels at crucial points along the route;

(4) The preparations required on the tanker and escort vessels, and the methods employed in making an emergency towline connection, including stationing of deck crews, preparation of messenger lines, bridles, and other towing gear, and energizing appropriate deck equipment;

(5) The manner in which an emergency towline connection would be made (which escort vessel will respond, how messengers and towlines will be passed, etc.);

(6) Other relevant information provided by the tanker master, pilot or escort vessel masters.

PART 169—SHIP REPORTING SYSTEMS

Subpart A—General

Sec.
169.1 What is the purpose of this part?
169.5 How are terms used in this part defined?
169.10 What geographic coordinates are used?
169.15 Incorporation by reference: Where can I get a copy of the publications mentioned in this part?

Subpart B—Establishment of Two Mandatory Ship Reporting Systems for the Protection of Northern Right Whales

169.100 What mandatory ship reporting systems are established by this subpart?
169.102 Who is the shore-based authority?
169.105 Where is the northeastern reporting system located?
169.110 When is the northeastern reporting system in effect?
169.115 Where is the southeastern reporting system located?
169.120 When is the southeastern reporting system in effect?
169.125 What classes of ships are required to make reports?
169.130 When are ships required to make reports?
169.135 How must the reports be made?
169.140 What information must be included in the report?

Subpart C—Transmission of Long Range Identification and Tracking Information

169.200 What is the purpose of this subpart?
169.205 What types of ships are required to transmit LRIT information (position reports)?
169.210 Where during its international voyage must a ship transmit position reports?
169.215 How must a ship transmit position reports?
169.220 When must a ship be fitted with LRIT equipment?
169.225 Which Application Service Providers may a ship use?
169.230 How often must a ship transmit position reports?
169.235 What exemptions are there from reporting?
169.240 When may LRIT equipment be switched off?
169.245 What must a ship master do if LRIT equipment is switched off or fails to operate?

AUTHORITY: 33 U.S.C. 1230(d), 1231; 46 U.S.C. 70115, Department of Homeland Security Delegation No. 0170.1.

SOURCE: USCG–1999–5525, 64 FR 29234, June 1, 1999, unless otherwise noted.

Subpart A—General

§ 169.1 What is the purpose of this part?

This subpart prescribes the requirements for mandatory ship reporting systems. Ship reporting systems are used to provide, gather, or exchange information through radio reports. The information is used to provide data for many purposes including, but not limited to: navigation safety, maritime security and domain awareness, environmental protection, vessel traffic services, search and rescue, weather forecasting and prevention of marine pollution.

NOTE TO § 169.1: For ship reporting system requirements not established by the Coast Guard, see 50 CFR Part 404.

[USCG–1999–5525, 64 FR 29234, June 1, 1999, as amended by USCG–2005–22612, 73 FR 23318, Apr. 29, 2008; USCG–2009–0416, 74 FR 27442, June 10, 2009]

§ 169.5 How are terms used in this part defined?

As used in this part—

Administration means the Government of the State whose flag the ship is entitled to fly.

Cargo ship means any ship which is not a passenger ship.

Flag Administration means the Government of a State whose flag the ship is entitled to fly.

Gross tonnage means tonnage as defined under the International Convention on Tonnage Measurement of Ships, 1969 (Incorporated by reference, see § 169.15).

Gross tons means vessel tonnage measured in accordance with the method utilized by the flag state administration of that vessel.

High speed craft means a craft that is operable on or above the water and is capable of a maximum speed equal to or exceeding $V=3.7\times displ^{.1667}$, where ''V'' is the maximum speed and ''displ'' is the vessel displacement corresponding to the design waterline in cubic meters.

High speed passenger craft means a high speed craft carrying more than 12 passengers.

International voyage means a voyage from a country to which the present International Convention for the Safety of Life at Sea (SOLAS), 1974 applies to a port outside such country, or conversely. For U.S. ships, such voyages will be considered to originate at a port in the United States, regardless of when the voyage actually began. Such voyages for U.S. ships will continue until the ship returns to the United States from its last foreign port.

Long range identification and tracking (LRIT) information or *position report* means a report containing the following information:

(1) The identity of the ship;

(2) The position of the ship (latitude and longitude); and

(3) The date and time of the position provided.

LRIT Data Center means a center established by a SOLAS Contracting Government or a group of Contracting Governments, or in the case of the International Data Center, by IMO, to request, receive, process, and archive LRIT information. An LRIT Data Center may be National, Regional, Co-operative or International.

Mandatory ship reporting system means a ship reporting system that requires the participation of specified vessels or classes of vessels, and that is established by a government or governments after adoption of a proposed system by the International Maritime Organization (IMO) as complying with all requirements of regulation V/8–1 of the International Convention for the Safety of Life at Sea, 1974, as amended (SOLAS), except paragraph (e) thereof.

Mobile offshore drilling unit means a self-propelled vessel capable of engaging in drilling operations for the exploration or exploitation of subsea resources.

Passenger ship means a ship that carries more than 12 passengers.

Self-propelled ships means ships propelled by mechanical means.

Shore-based authority means the government appointed office or offices that will receive the reports made by ships entering each of the mandatory ship reporting systems. The office or offices will be responsible for the management and coordination of the system, interaction with participating ships, and the safe and effective operation of the system. Such an authority may or may not be an authority in charge of a vessel traffic service.

United States means the States of the United States, the District of Columbia, Guam, Puerto Rico, the Virgin Islands, American Samoa, the Northern Mariana Islands, and any other territory or possession of the United States.

[USCG–1999–5525, 66 FR 58070, Nov. 20, 2001, as amended by USCG–2005–22612, 73 FR 23318, Apr. 29, 2008]

§ 169.10 What geographic coordinates are used?

Geographic coordinates expressed in terms of latitude or longitude, or both, are not intended for plotting on maps or charts where the referenced horizontal datum is the North American

Datum of 1983 (NAD 83), unless such geographic coordinates are expressly labeled NAD 83. Geographic coordinates without the NAD 83 reference may be plotted on maps or charts referenced to NAD 83 only after application of the appropriate corrections that are published on the particular map or chart being used.

§ 169.15 Incorporation by reference: Where can I get a copy of the publications mentioned in this part?

(a) Certain material is incorporated by reference into this part with the approval of the Director of the Federal Register under 5 U.S.C. 552(a) and 1 CFR part 51. To enforce any edition other than that specified in this section, the Coast Guard must publish notice of change in the FEDERAL REGISTER and the material must be available to the public. All approved material is available for inspection at the National Archives and Records Administration (NARA). For information on the availability of this material at NARA, call 202–741–6030 or go to *http://www.archives.gov/federal_register/code_of_federal_regulations/ibr_locations.html*. Also, it is available for inspection at the Coast Guard, Office of Navigation Systems (CG–5532), 2100 2nd St. SW., Stop 7580, Washington, DC 20593–7580, and is available from the sources indicated in this section.

(b) *International Electrotechnical Commission (IEC) Bureau Central de la Commission Electrotechnique Internationale*, 3 rue de Varembé, P.O. Box 131, 1211 Geneva 20, Switzerland.

(1) IEC 60945, Fourth edition 2002–08, Maritime navigation and radiocommunication equipment and systems—General requirements—Methods of testing and required test results, incorporation by reference approved for § 169.215.

(2) [Reserved]

(c) *International Maritime Organization (IMO)*, 4 Albert Embankment, London SE1 7SR, U.K.

(1) IMO Resolution MSC.202(81), adopted on May 19, 2006, Adoption of Amendments to the International Convention for the Safety of Life at Sea, 1974, as Amended, incorporation by reference approved for § 169.240.

(2) IMO Resolution MSC.210(81), adopted on May 19, 2006, Performance Standards and Functional Requirements for the Long-Range Identification and Tracking of Ships, incorporation by reference approved for §§ 169.215 and 169.240.

(3) IMO Resolution MSC.254(83), adopted on October 12, 2007, Adoption of Amendments to the Performance Standards and Functional Requirements for the Long-Range Identification and Tracking of Ships, incorporation by reference approved for §§ 169.215 and 169.240.

(4) IMO Resolution A.694(17), adopted on November 6, 1991, General Requirements for Shipborne Radio Equipment Forming Part of the Global Maritime Distress and Safety System (GMDSS) and for Electronic Navigational Aids, incorporation by reference approved for § 165.215.

(5) International Convention on Tonnage Measurement of Ships, 1969, incorporation by reference approved for § 169.5.

[USCG–2005–22612, 73 FR 23319, Apr. 29, 2008, as amended by USCG–2010–0351, 75 FR 36287, June 25, 2010; USCG–2011–0257, 76 FR 31838, June 2, 2011]

Subpart B—Establishment of Two Mandatory Ship Reporting Systems for the Protection of Northern Right Whales

§ 169.100 What mandatory ship reporting systems are established by this subpart?

This subpart prescribes requirements for the establishment and maintenance of two mandatory ship reporting systems for the protection of the endangered northern right whale (also known as the North Atlantic right whale). These two systems are designated for certain areas of the East Coast of the United States. One system is located in the northeast and is identified as WHALESNORTH. The other system is located in the southeast and is identified as WHALESSOUTH.

NOTE TO § 169.100: 50 CFR 224.103(c) contains requirements and procedures concerning

northern right whale approach limitations and avoidance procedures.

[USCG–1999–5525, 64 FR 29234, June 1, 1999, as amended by 66 FR 58070, Nov. 20, 2001]

§ 169.102 Who is the shore-based authority?

The U.S. Coast Guard is the shore-based authority for these mandatory ship reporting systems.

§ 169.105 Where is the northeastern reporting system located?

Geographical boundaries of the northeastern area include the waters of Cape Cod Bay, Massachusetts Bay, and the Great South Channel east and southeast of Massachusetts. The coordinates (NAD 83) of the area are as follows: from a point on Cape Ann, Massachusetts at 42°39′ N, 70°37′ W; then northeast to 42°45′ N, 70°13′ W; then southeast to 42°10′ N, 68°31′ W; then south to 41°00′ N, 68°31′ W; then west to 41°00′ N, 69°17′ W; then northeast to 42°05′ N, 70°02′ W, then west to 42°04′ N, 70°10′ W; and then along the Massachusetts shoreline of Cape Cod Bay and Massachusetts Bay back to the point on Cape Anne at 42°39′ N, 70°37′ W.

§ 169.110 When is the northeastern reporting system in effect?

The mandatory ship reporting system in the northeastern United States operates year-round.

§ 169.115 Where is the southeastern reporting system located?

Geographical boundaries of the southeastern area include coastal waters within about 25 nautical miles (45 kilometer) along a 90-nautical mile (170-kilometer) stretch of the Atlantic seaboard in Florida and Georgia. The area coordinates (NAD 83) extends from the shoreline east to longitude 80°51.6′ W with the southern and northern boundaries at latitude 30°00′ N and 31°27′ N, respectively.

§ 169.120 When is the southeastern reporting system in effect?

The mandatory ship reporting system in the southeastern United States operates during the period beginning on November 15 each year through April 16 of the following year.

[USCG–1999–5525, 66 FR 58070, Nov. 20, 2001]

§ 169.125 What classes of ships are required to make reports?

Each self-propelled ship of 300 gross tons or greater must participate in the reporting systems, except government ships exempted from reporting by regulation V/8–1(c) of SOLAS. However, exempt ships are encouraged to participate in the reporting systems.

[USCG–1999–5525, 66 FR 58070, Nov. 20, 2001]

§ 169.130 When are ships required to make reports?

Participating ships must report to the shore-based authority upon entering the area covered by a reporting system. Additional reports are not necessary for movements made within a system or for ships exiting a system.

§ 169.135 How must the reports be made?

(a) A ship equipped with INMARSAT C must report in IMO standard format as provided in § 169.140 in table 169.140.

(b) A ship not equipped with INMARSAT C must report to the Coast Guard using other means, listed below in order of precedence—

(1) Narrow band direct printing (SITOR),

(2) HF voice communication, or

(3) MF or VHF voice communications.

(c) SITOR or HF reports made directly to the Coast Guard's Communications Area Master Station Atlantic (CAMSLANT) in Chesapeake, VA, or MF or VHF reports made to Coast Guard activities or groups, should only be made by ships not equipped with INMARSAT C. Ships in this category must provide all the required information to the Coast Guard watchstander.

[USCG–1999–5525, 64 FR 29234, June 1, 1999, as amended by 66 FR 58070, Nov. 20, 2001]

§ 169.140 What information must be included in the report?

Each ship report made to the shore-based authority must follow the standard reporting and format requirements listed in this section in table 169.140. Current email addresses and telex numbers are published annually in the US Coast Pilot.

TABLE 169.140—REQUIREMENTS FOR SHIP REPORTS

Telegraphy	Function	Information required
Name of system	System identifier	Ship reporting system WHALESNORTH or WHALESSOUTH.
M	INMARSAT Number	Vessel INMARSAT number
A	Ship	The name, call sign or ship station identity, IMO number, and flag of the vessel.
B	Date and time of event	A 6-digit group giving day of month (first two digits), hours and minutes (last four digits).
E	True course	A 3-digit group indicating true course.
F	Speed in knots and tenths of knots	A 3-digit group.
H	Date, time and point of entry into system	Entry time expressed as in (B) and entry position expressed as-(1) a 4-digit group giving latitude in degrees and minutes suffixed with N(north) or S (south) and a 5-digit group giving longitude in degrees and minutes suffixed with E (east) or W (west); or (2) True bearing (first 3 digits) and distance (state distance) in nautical miles from a clearly identified landmark (state landmark)
I	Destination and expected time of arrival	Name of port and date time group expressed as in (B)
L	Route information	Intended track.

[USCG–1999–5525, 66 FR 58070, Nov. 20, 2001]

Subpart C—Transmission of Long Range Identification and Tracking Information

SOURCE: USCG–2005–22612, 73 FR 23319, Apr. 29, 2008, unless otherwise noted.

§ 169.200 What is the purpose of this subpart?

This subpart implements Regulation 19–1 of SOLAS Chapter V (SOLAS V/19–1) and requires certain ships engaged on an international voyage to transmit vessel identification and position information electronically. This requirement enables the Coast Guard to obtain long range identification and tracking (LRIT) information and thus heightens our overall maritime domain awareness, enhances our search and rescue operations, and increases our ability to detect anomalies and deter transportation security incidents.

§ 169.205 What types of ships are required to transmit LRIT information (position reports)?

The following ships, while engaged on an international voyage, are required to transmit position reports:

(a) A passenger ship, including high speed passenger craft.

(b) A cargo ship, including high speed craft, of 300 gross tonnage or more.

(c) A mobile offshore drilling unit while underway and not engaged in drilling operations.

§ 169.210 Where during its international voyage must a ship transmit position reports?

The requirements for the transmission of position reports, imposed by the United States, vary depending on the relationship of the United States to a ship identified in § 169.205.

(a) *Flag State relationship*. A U.S. flag ship engaged on an international voyage must transmit position reports wherever they are located.

(b) *Port State relationship*. A foreign flag ship engaged on an international voyage must transmit position reports after the ship has announced its intention to enter a U.S. port or place under requirements in 33 CFR part 160, subpart C.

(c) *Coastal State relationship*. A foreign flag ship engaged on an international voyage must transmit position reports when the ship is within 1,000 nautical miles of the baseline of the United States, unless their Flag Administration, under authority of SOLAS V/19–1.9.1, has directed them not to do so.

§ 169.215 How must a ship transmit position reports?

A ship must transmit position reports using Long Range Identification and Tracking (LRIT) equipment that has been type-approved by their Administration. To be type-approved by the Coast Guard, LRIT equipment must meet the requirements of IMO

Resolutions A.694(17), MSC.210(81), and MSC.254(83), and IEC standard IEC 60945 (Incorporated by reference, see § 169.15).

§ 169.220 When must a ship be fitted with LRIT equipment?

A ship identified in § 169.205 must be equipped with LRIT equipment—

(a) Before getting underway, if the ship is constructed on or after December 31, 2008.

(b) By the first survey of the radio installation after December 31, 2008, if the ship is—

(1) Constructed before December 31, 2008, and

(2) Operates within—

(i) One hundred (100) nautical miles of the United States baseline, or

(ii) Range of an Inmarsat geostationary satellite, or other Application Service Provider recognized by the Administration, with which continuous alerting is available.

(c) By the first survey of the radio installation after July 1, 2009, if the ship is—

(1) Constructed before December 31, 2008, and

(2) Operates within the area or range specified in paragraph (b)(2) of this section as well as outside the range of an Inmarsat geostationary satellite with which continuous alerting is available. While operating in the area or range specified in paragraph (b)(2) of this section, however, a ship must install LRIT equipment by the first survey of the radio installation after December 31, 2008.

§ 169.225 Which Application Service Providers may a ship use?

A ship may use an Application Service Provider (ASP) recognized by its Administration. Some Communication Service Providers may also serve as an ASP.

§ 169.230 How often must a ship transmit position reports?

A ship's LRIT equipment must transmit position reports at 6-hour intervals unless a more frequent interval is requested remotely by an LRIT Data Center.

§ 169.235 What exemptions are there from reporting?

A ship is exempt from this subpart if it is—

(a) Fitted with an operating automatic identification system (AIS), under 33 CFR 164.46, and operates only within 20 nautical miles of the United States baseline,

(b) A warship, naval auxiliaries or other ship owned or operated by a SOLAS Contracting Government and used only on Government non-commercial service, or

(c) A ship solely navigating the Great Lakes of North America and their connecting and tributary waters as far east as the lower exit of the St. Lambert Lock at Montreal in the Province of Quebec, Canada.

§ 169.240 When may LRIT equipment be switched off?

A ship engaged on an international voyage may switch off its LRIT equipment only when it is permitted by its Flag Administration, in circumstances detailed in SOLAS V/19–1.7, or in paragraph 4.4.1, of resolution MSC.210(81), as amended by resolution MSC.254(83) (Incorporated by reference, see § 169.15).

§ 169.245 What must a ship master do if LRIT equipment is switched off or fails to operate?

(a) If a ship's LRIT equipment is switched off or fails to operate, the ship's master must inform his or her Flag Administration without undue delay.

(b) The master must also make an entry in the ship's logbook that states—

(1) His or her reason for switching the LRIT equipment off, or an entry that the equipment has failed to operate, and

(2) The period during which the LRIT equipment was switched off or non-operational.

NOTE TO § 169.245: For U.S. vessels, the U.S. Coast Guard serves as the Flag Administration for purposes of this section. All LRIT notifications for the U.S. Flag Administration, in addition to requests or questions about LRIT, should be communicated to the U.S. Coast Guard by e-mail addressed to *LRIT@uscg.mil*.

SUBCHAPTERS Q–R [RESERVED]

SUBCHAPTER S—BOATING SAFETY

PART 173—VESSEL NUMBERING AND CASUALTY AND ACCIDENT REPORTING

Subpart A—General

Sec.
173.1 Purpose; preemptive effect.
173.3 Definitions.

Subpart B—Numbering

173.11 Applicability.
173.13 Exemptions.
173.15 Vessel number required.
173.17 Reciprocity.
173.19 Other numbers prohibited.
173.21 Certificate of number required.
173.23 Inspection of certificate.
173.25 Location of certificate of number.
173.27 Numbers: Display; size; color.
173.29 Notification to issuing authority.
173.31 Surrender of certificate of number.
173.33 Removal of number.
173.35 Coast Guard validation sticker.

Subpart C—Casualty and Accident Reporting

173.51 Applicability.
173.53 Immediate notification of death or disappearance.
173.55 Report of casualty or accident.
173.57 Contents of report.
173.59 Where to submit report.

Subpart D—Issue of Certificate of Number

173.71 Application for and issuance of certificate of number.
173.73 [Reserved]
173.75 Temporary certificate.
173.77 Validity of certificate of number.
173.79 Expiration of Coast Guard certificate of number.
173.81 Coast Guard forms for numbering and casualty reporting.
173.83 Availability of Coast Guard forms.
173.85 Fees levied by the Coast Guard.

APPENDIX A TO PART 173—ISSUING AUTHORITIES AND REPORTING AUTHORITIES

AUTHORITY: 31 U.S.C. 9701; 46 U.S.C. 2110, 6101, 12301, 12302; OMB Circular A–25; Department of Homeland Security Delegation No. 0170.1.

SOURCE: CGD 72–54R, 37 FR 21399, Oct. 7, 1972, unless otherwise noted.

Subpart A—General

§ 173.1 Purpose; preemptive effect.

This part prescribes requirements for numbering vessels and for reporting casualties and accidents to implement sections 6101, 6102, 12301, and 12302 of Title 46, United States Code. The regulations in subparts A, B, and D of this part have preemptive effect over conflicting State or local regulation. The regulations in subpart C of this part have preemptive effect over State or local regulation within the same field, except to the extent that Congress requires the Coast Guard to allow State casualty reporting systems pursuant to 46 U.S.C. chapter 131.

[USCG–2003–14963, 77 FR 18699, Mar. 28, 2012]

§ 173.3 Definitions.

As used in this part—

Airboat means a vessel that is typically flat-bottomed and propelled by an aircraft-type propeller powered by an engine.

Auxiliary sail means a vessel with sail as its primary method of propulsion and mechanical propulsion as its secondary method.

Cabin motorboat means a vessel propelled by propulsion machinery and providing enclosed spaces inside its structure.

Certificate of number means the certificate required by § 173.21 of this part.

Houseboat means a motorized vessel that is usually non-planing and designed primarily for multi-purpose accommodation spaces with low freeboard and little or no foredeck or cockpit.

Hull identification number or *HIN* means a number required by 33 CFR 181.23.

Inboard, in the context of an engine, means an engine mounted inside the confines of a vessel which powers a drive shaft that turns a water jet impeller or that runs through the bottom of the hull and is attached to a propeller at the other end.

Inflatable boat means a vessel that uses air-filled flexible fabric for buoyancy.

Issuing authority means a State listed in Appendix A of this part as having a numbering system approved by the Coast Guard or the Coast Guard itself when a State numbering system has not been approved.

Open motorboat means a vessel equipped with propulsion machinery and having an open load carrying area that does not have a continuous deck to protect it from the entry of water.

Operate means use, navigate, or employ.

Operator means the person who is in control or in charge of a vessel while it is in operation.

Outboard, in the context of an engine, means an engine with propeller or water jet integrally attached, which is usually mounted at the stern of a vessel.

Owner means a person, other than a secured party, having property rights in or title to a vessel, including persons entitled to use or possess a vessel subject to a security interest in another person, but excluding lessees under a lease not intended as security.

Paddlecraft means a vessel powered only by its occupants, using a single or double- bladed paddle as a lever without the aid of a fulcrum provided by oarlocks, thole pins, crutches, or similar arrangements.

Person means an individual, firm, partnership, corporation, company, association, joint-stock association, or governmental entity and includes a trustee, receiver, assignee, or similar representative of any of them.

Personal watercraft means a vessel propelled by a water-jet pump or other machinery as its primary source of motive power and designed to be operated by a person sitting, standing, or kneeling on the vessel, rather than sitting or standing within the vessel's hull.

Pod drive means an engine mounted in front of the transom of a vessel and attached through the bottom of the hull to a steerable propulsion unit.

Pontoon boat means a vessel with a broad, flat deck that is affixed on top of closed cylinders which are used for buoyancy, the basic design of which is usually implemented with two rows of floats as a catamaran or with three rows of floats as a trimaran.

Reporting authority means a State listed in Appendix A of this part as having a numbering system approved by the Coast Guard or the Coast Guard itself when a numbering system has not been approved.

Rowboat means an open vessel manually propelled by oars.

Sail only means a vessel propelled only by sails.

State means a State of the United States, the District of Columbia, American Samoa, Guam, the Commonwealth of the Northern Mariana Islands, Puerto Rico, the U.S. Virgin Islands, and any other territory or possession of the United States.

State of principal operation means the State in whose waters a vessel is or will be operated most during a calendar year.

Sterndrive means an engine, powering a propeller through a series of shafts and gears, mounted in front of the transom of a vessel and attached through the transom to a drive unit that is similar to the lower unit of an outboard; and may also be known as an inboard-outdrive or an inboard-outboard.

Vessel means every description of watercraft or other artificial contrivance used or capable of being used as a means of transportation on water.

[USCG–2003–14963, 77 FR 18699, Mar. 28, 2012]

Subpart B—Numbering

§ 173.11 Applicability.

This subpart applies to each vessel equipped with propulsion machinery of any type used on waters subject to the jurisdiction of the United States and on the high seas beyond the territorial seas for vessels owned in the United States except:

(a) Foreign vessels temporarily using waters subject to U.S. jurisdiction;

(b) Military or public vessels of the United States, except recreational-type public vessels;

(c) A vessel whose owner is a State or subdivision thereof, which is used principally for governmental purposes, and which is clearly identifiable as such;

(d) Ships' lifeboats;

(e) A vessel which has or is required to have a valid marine document as a vessel of the United States.

§ 173.13 Exemptions.

Where the Coast Guard issues numbers, the following classes of vessels are exempt, under Section 12303 of Title 46, United States Code, from the numbering provisions of Sections 12301 and 12302 of Title 46, United States Code, and this part:

(a) A vessel that is used exclusively for racing.

(b) A vessel equipped with propulsion machinery of less than 10 horsepower that:

(1) Is owned by the owner of a vessel for which a valid certificate of number has been issued;

(2) Displays the number of that numbered vessel followed by the suffix ''1'' in the manner prescribed in § 173.27; and

(3) Is used as a tender for direct transportation between that vessel and the shore and for no other purpose.

§ 173.15 Vessel number required.

(a) Except as provided in § 173.17, no person may use a vessel to which this part applies unless:

(1) It has a number issued on a certificate of number by the issuing authority in the State of principal operation; and

(2) The number is displayed as described in § 173.27.

(b) This section does not apply to a vessel for which a valid temporary certificate has been issued to its owner by the issuing authority in the State of principal operation.

[CGD 72–54R, 37 FR 21399, Oct. 7, 1972, as amended by USCG–2003–14963, 77 FR 18699, Mar. 28, 2012]

§ 173.17 Reciprocity.

(a) Section 12302(c) of Title 46, United States Code, states:

When a vessel is numbered in a State, it is deemed in compliance with the numbering system of a State in which it temporarily is operated.

(b) Section 12302(d) of Title 46, United States Code, states:

When a vessel is removed to a new State of principal operation, the issuing authority of that State shall recognize the validity of the number issued by the original State for 60 days.

[CGD 89–048, 54 FR 27002, June 27, 1989]

§ 173.19 Other numbers prohibited.

No person may operate a vessel to which this part applies that has any number that is not issued by an issuing authority for that vessel on its forward half.

[CGD 72–54R, 37 FR 21399, Oct. 7, 1972, as amended by USCG–2003–14963, 77 FR 18699, Mar. 28, 2012]

§ 173.21 Certificate of number required.

(a) Except as provided in §§ 173.13 and 173.17, no person may operate a vessel to which this part applies unless it has on board:

(1) A valid certificate of number or temporary certificate for that vessel issued by the issuing authority in the State in which the vessel is principally operated; or

(2) For the vessel described in paragraph (b) of this section, a copy of the lease or rental agreement, signed by the owner or his or her authorized representative and by the person leasing or renting the vessel, that contains at least:

(i) The vessel number that appears on the certificate of number; and

(ii) The period of time for which the vessel is leased or rented.

(b) Section 12304(a) of Title 46, United States Code, states in part: The certificate of number for a vessel less than 26 feet in length and leased or rented to another for the latter's noncommercial operation of less than 7 days may be retained on shore by the vessel's owner or representative at the place from which the vessel departs or returns to the possession of the owner or the owner's representative.

[CGD 72–54R, 37 FR 21399, Oct. 7, 1972, as amended by CGD 77–117A, 43 FR 17941, Apr. 27, 1978; CGD 89–048, 54 FR 27002, June 27, 1989; USCG–2003–15404, 68 FR 37742, June 25, 2003; USCG–2003–14963, 77 FR 18699, Mar. 28, 2012]

§ 173.23 Inspection of certificate.

Each person operating a vessel to which this part applies shall present the certificate or lease or rental agreement required by § 173.21 to any Federal, State, or local law enforcement

officer for inspection at his or her request.

[CGD 72–54R, 37 FR 21399, Oct. 7, 1972, as amended by USCG–2003–15404, 68 FR 37742, June 25, 2003; USCG–2003–14963, 77 FR 18700, Mar. 28, 2012]

§ 173.25 Location of certificate of number.

No person may operate a vessel to which this part applies unless the certificate or lease or rental agreement required by § 173.21 is carried on board in such a manner that it can be handed to a person authorized under § 173.23 to inspect it.

[CGD 72–54R, 37 FR 21399, Oct. 7, 1972, as amended by USCG–2003–14963, 77 FR 18700, Mar. 28, 2012]

§ 173.27 Numbers: Display; size; color.

(a) Each number required by § 173.15 must:

(1) Be painted on or permanently attached to each side of the forward half of the vessel except as allowed by paragraph (b) or required by paragraph (c) of this section;

(2) Be in plain vertical block characters of not less than 3 inches in height;

(3) Contrast with the color of the background and be distinctly visible and legible;

(4) Have spaces or hyphens that are equal to the width of a letter other than ''I'' or a number other than ''1'' between the letter and number groupings (Example: DC 5678 EF or DC–5678–EF); and

(5) Read from left to right.

(b) When a vessel is used by a manufacturer or by a dealer for testing or demonstrating, the number may be painted on or attached to removable plates that are temporarily but firmly attached to each side of the forward half of the vessel.

(c) On vessels so configured that a number on the hull or superstructure would not be easily visible, the number must be painted on or attached to a backing plate that is attached to the forward half of the vessel so that the number is visible from each side of the vessel.

(d) Each number displayed on a tender exempted under § 173.13 must meet the requirements of paragraph (a) of this section and have a space or hyphen that is equal to the width of a letter other than ''I'' or a number other than ''1'' between the suffix and the number. (Example: DC 5678 EF 1 or DC–5678–EF–1.)

§ 173.29 Notification to issuing authority.

A person whose name appears as the owner of a vessel on a certificate of number shall, within 15 days, notify the issuing authority in a manner prescribed by the issuing authority of:

(a) Any change in his or her address;

(b) The theft or recovery of the vessel;

(c) The loss or destruction of a valid certificate of number;

(d) The transfer of all or part of his or her interest in the vessel; and

(e) The destruction or abandonment of the vessel.

[CGD 72–54R, 37 FR 21399, Oct. 7, 1972, as amended by USCG–2003–15404, 68 FR 37742, June 25, 2003]

§ 173.31 Surrender of certificate of number.

A person whose name appears as the owner of a vessel on a certificate of number shall surrender the certificate in a manner prescribed by the issuing authority within 15 days after it becomes invalid under paragraph (b), (c), (d), or (e) of § 173.77.

§ 173.33 Removal of number.

The person whose name appears on a certificate of number as the owner of a vessel shall remove the number and validation sticker from the vessel when:

(a) The vessel is documented by the Coast Guard;

(b) The certificate of number is invalid under paragraph (c) of § 173.77; or

(c) The vessel is no longer principally operated in the State where the certificate was issued.

[CGD 72–54R, 37 FR 21399, Oct. 7, 1972, as amended by USCG–2003–14963, 77 FR 18700, Mar. 28, 2012]

§ 173.35 Coast Guard validation sticker.

No person may operate a vessel except a vessel exempted in § 173.13 that has a number issued by the Coast

Guard unless it has the validation sticker issued with the certificate of number displayed within 6 inches of the number.

[CGD 72–54R, 37 FR 21399, Oct. 7, 1972, as amended by USCG–2003–14963, 77 FR 18700, Mar. 28, 2012]

Subpart C—Casualty and Accident Reporting

§ 173.51 Applicability.

(a) This subpart applies to each vessel operated on waters subject to the jurisdiction of the United States and on the high seas beyond the territorial seas for vessels owned in the United States that:

(1) Is operated by its operator for recreational purposes; or

(2) Is required to be numbered under this part.

(b) This subpart does not apply to a vessel subject to inspection under Title 46 U.S.C. Chapter 33.

[CDG 72–54R, 37 FR 21399, Oct. 7, 1972, as amended by CDG 84–099, 52 FR 47533, Dec. 14, 1987; USCG–2003–14963, 77 FR 18700, Mar. 28, 2012]

§ 173.53 Immediate notification of death or disappearance.

(a) When, as a result of an occurrence that involves a vessel or its equipment, a person dies or disappears from a vessel, the operator shall, without delay, by the quickest means available, notify the nearest reporting authority listed in appendix A of this part of:

(1) The date, time, and exact location of the occurrence;

(2) The name of each person who died or disappeared;

(3) The number and name of the vessel; and

(4) The names and addresses of the owner and operator.

(b) When the operator of a vessel cannot give the notice required by paragraph (a) of this section, each person on board the vessel shall notify the casualty reporting authority or determine that the notice has been given.

§ 173.55 Report of casualty or accident.

(a) The operator of a vessel shall submit the casualty or accident report prescribed in § 173.57 to the reporting authority prescribed in § 173.59 when, as a result of an occurrence that involves the vessel or its equipment:

(1) A person dies;

(2) A person is injured and requires medical treatment beyond first aid;

(3) Damage to vessels and other property totals $2,000 or more or there is a complete loss of any vessel;

(4) A person disappears from the vessel under circumstances that indicate death or injury.

(b) A report required by this section must be made:

(1) Within 48 hours of the occurrence if a person dies within 24 hours of the occurrence;

(2) Within 48 hours of the occurrence if a person is injured and requires medical treatment beyond first aid, or disappears from a vessel; and

(3) Within 10 days of the occurrence or death if an earlier report is not required by this paragraph.

(c) When the operator of a vessel cannot submit the casualty or accident report required by paragraph (a) of this section, the owner shall submit the casualty or accident report.

[CGD 72–54R, 37 FR 21399, Oct. 7, 1972, as amended by CGD 76–155, 44 FR 5308, Jan. 25, 1979; CGD 82–015, 54 FR 5610, Feb. 6, 1989; USCG–1999–6094, 66 FR 21675, May 1, 2001; 66 FR 33845, June 26, 2001; USCG–1999–6094, 67 FR 14645, Mar. 27, 2002]

§ 173.57 Contents of report.

(a) Each report required by § 173.55 of this subpart must be in writing, dated upon completion, and signed by the person who prepared it.

(b) Until January 1, 2017, each report must contain, if available, at least the following information about the casualty or accident:

(1) Number and name of each vessel involved;

(2) Name and address of each owner of each vessel involved;

(3) Name of the nearest city or town, the county, the State, and the body of water;

(4) Time and date the casualty or accident occurred;

(5) Location on the water;

(6) Visibility, weather, and water conditions;

(7) Estimated air and water temperatures;

(8) Name, address, age, or date of birth, telephone number, vessel operating experience, and boating safety training of the operator making the report;

(9) Name and address of each operator of each vessel involved;

(10) Number of persons onboard or towed on skis by each vessel;

(11) Name, address, and date of birth of each person injured or killed;

(12) Cause of each death;

(13) Weather forecasts available to and weather reports used by the operator before and during the use of the vessel;

(14) Name and address of each owner of property involved;

(15) Availability and use of personal flotation devices;

(16) Type and amount of each fire extinguisher used;

(17) Nature and extent of each injury;

(18) Description of all property damage and vessel damage with an estimate of the cost of all repairs;

(19) Description of each equipment failure that caused or contributed to the cause of the casualty;

(20) Description of the vessel casualty or accident;

(21) Type of vessel operation (cruising, drifting, fishing, hunting, skiing, racing, or other), and the type of accident (capsizing, sinking, fire, explosion, or other);

(22) Opinion of the person making the report as to the cause of the casualty, including whether or not alcohol or drugs, or both, was a cause or contributed to causing the casualty;

(23) Make, model, type (open, cabin, house, or other), beam width at widest point, length, depth from transom to keel, horsepower, propulsion (outboard, inboard, inboard outdrive, sail, or other), fuel (gas, diesel, or other), construction (wood, steel, aluminum, plastic, fiberglass, or other), and year built (model year) of the reporting operator's vessel;

(24) Name, address, and telephone number of each witness;

(25) Manufacturer's hull identification number, if any, of the reporting operator's vessel; and

(26) Name, address, and telephone number of the person submitting the report.

(c) As of January 1, 2017, each report must contain, if available, at least the following information about the casualty or accident:

(1) Number and name of each vessel involved;

(2) Name and address of each owner of each vessel involved;

(3) Name of the nearest city or town, the county, the State, and the body of water;

(4) Time and date the casualty or accident occurred;

(5) Location on the water;

(6) Visibility, weather, and water conditions;

(7) Estimated air and water temperatures;

(8) Name, address, age, or date of birth, telephone number, vessel operating experience, and boating safety training of the operator making the report;

(9) Name and address of each operator of each vessel involved;

(10) Number of persons onboard or towed on skis by each vessel;

(11) Name, address, and date of birth of each person injured or killed;

(12) Cause of each death;

(13) Weather forecasts available to and weather reports used by the operator before and during the use of the vessel;

(14) Name and address of each owner of property involved;

(15) Availability and use of personal flotation devices;

(16) Type and number of each fire extinguisher used;

(17) Nature and extent of each injury;

(18) Description of all property damage and vessel damage with an estimate of the cost of all repairs;

(19) Description of each equipment failure that caused or contributed to the cause of the casualty;

(20) Description of the vessel casualty or accident;

(21) Type of vessel operation (cruising, drifting, fishing, hunting, skiing, racing, or other), and the type of accident (capsizing, sinking, fire, explosion, or other);

(22) Opinion of the person making the report as to the cause of the casualty, including whether or not alcohol or drugs, or both, was a cause of or contributed to causing the casualty.

(23) Characteristics of the reporting operator's vessel, including—

(i) Make;

(ii) Model;

(iii) Type: authorized terms are ''air boat'', ''auxiliary sail'', ''cabin motorboat'', ''houseboat'', ''inflatable boat'', ''open motorboat'', ''paddlecraft'', ''personal watercraft'', ''pontoon boat'', ''rowboat'', ''sail only'', or ''other'';

(iv) Beam width at widest point;

(v) Overall length of vessel;

(vi) Depth from transom to keel;

(vii) Horsepower;

(viii) Propulsion: authorized terms are ''air thrust'', ''manual'', ''propeller'', ''sail'', ''water jet'', or ''other'';

(ix) Fuel: authorized terms are ''electric'', ''diesel'', ''gas'', or ''other'';

(x) Engine drive type: authorized terms are ''inboard'', ''outboard'', ''pod drive'', ''sterndrive'', or ''other'';

(xi) Hull material: authorized terms are ''aluminum'', ''fiberglass'', ''plastic'', ''rubber/vinyl/canvas'', ''steel'', ''wood'', or ''other''; and

(xii) Model year;

(24) Name, address, and telephone number of each witness;

(25) Manufacturer's hull identification number, if any, of the reporting operator's vessel; and

(26) Name, address, and telephone number of the person submitting the report.

[USCG–2003–14963, 77 FR 18700, Mar. 28, 2012]

§ 173.59 Where to submit report.

A report required by § 173.55 must be submitted to:

(a) The reporting authority listed in appendix A of this part where the vessel number was issued, or, if the vessel has no number, where the vessel is principally used; or

(b) The reporting authority where the casualty or accident occurred, if it occurred outside the State where the vessel is numbered or principally used.

Subpart D—Issue of Certificate of Number

§ 173.71 Application for and issuance of certificate of number.

(a) The owner of a vessel to which § 173.11 of this part applies and for which a certificate of number is required may apply for that certificate to the issuing authority for the vessel's State of principal operation listed in Appendix A of this part. The application must be made in the manner specified by the issuing authority and must be accompanied by payment of any fee required by the issuing authority.

(b) Upon determination that the owner's application for a certificate of number complies with the requirements of paragraph (a) of this section, the issuing authority may issue a certificate of number.

(c) A duplicate certificate of number may be applied for and issued as provided by paragraphs (a) and (b) of this section upon the owner's statement that the original certificate is lost or destroyed.

[USCG–2003–14963, 77 FR 18700, Mar. 28, 2012]

§ 173.73 [Reserved]

§ 173.75 Temporary certificate.

A temporary certificate valid for not more than 60 days after it is issued may be issued by an issuing authority pending the issue of a certificate of number. A temporary certificate is not valid after the date that the owner receives the certificate of number from the issuing authority.

§ 173.77 Validity of certificate of number.

(a) Except as provided in paragraphs (b), (c), (d), and (e) of this section, a certificate of number is valid until the date of expiration prescribed by the issuing authority.

(b) A certificate of number issued by an issuing authority is invalid after the date upon which:

(1) The vessel is documented or required to be documented under Part 67 of Title 46, Code of Federal Regulations;

(2) The person whose name appears on the certificate of number as owner

of the vessel transfer all of his or her ownership in the vessel; or

(3) The vessel is destroyed or abandoned.

(c) A certificate of number issued by an issuing authority is invalid if:

(1) The application for the certificate of number contains a false or fraudulent statement; or

(2) The fees for the issuance of the certificate of number are not paid.

(d) A certificate of number is invalid 60 days after the day on which the vessel is no longer principally operated in the State where the certificate was issued.

(e) The certificate of number is invalid when the person whose name appears on the certificate involuntarily loses his or her interest in the numbered vessel by legal process.

[CGD 72–54R, 37 FR 21399, Oct. 7, 1972, as amended by USCG–2003–15404, 68 FR 37742, June 25, 2003; USCG–2003–14963, 77 FR 18701, Mar. 28, 2012]

§ 173.79 Expiration of Coast Guard certificate of number.

A certificate of number issued by the Coast Guard expires 3 years from the date it is issued.

§ 173.81 Coast Guard forms for numbering and casualty reporting.

(a) In a State where the Coast Guard is the issuing authority, the following Coast Guard forms must be used:

(1) Each application for a certificate of number or renewal must be made on two-part Form CG–3876 and 3876A, Application for Number and Temporary Certificate.

(2) Each notification required by § 173.29(b) must be made on Form CG–2921, Notification of Change in Status of Vessel.

(3) Each notification required by § 173.29(a) must be made on Form CG–3920, Change of Address Notice.

(4) Each notification required by § 173.29(c) must be made in writing.

(5) Each application for a duplicate certificate of number must be made on two-part Form CG–3919 and CG–3919A, Application for Duplicate Certificate of Number and Temporary Duplicate Certificate.

(6) Each vessel casualty required to be reported by § 173.55 must be made on Form CG–3865.

(b) Each surrender of a certificate of number required by § 173.31 may be made in any form but must contain a written statement as to why the certificate is being surrendered.

§ 173.83 Availability of Coast Guard forms.

In a State where the Coast Guard is the issuing authority, forms required by § 173.81 are available at all manned Coast Guard shore units, except light and loran stations and except for Form CG–3865, at all first- and second-class and some third- and fourth-class post offices.

§ 173.85 Fees levied by the Coast Guard.

(a) In a State where the Coast Guard is the issuing authority, the fees for issuing certificates of number are:

(1) Original or transferred certificate of number and two validation stickers—$24.

(2) Renewed certificate of number and two validation stickers—$16.

(3) Duplicate certificate of number—$9.

(4) Replacement of lost or destroyed validation stickers—$9.

(b) Fees are payable by check or money-order made payable to the ''U.S. Coast Guard''; by major credit card (MasterCard or Visa); or, when the owner applies in person, in cash.

[USCG–1998–3386, 64 FR 36243, July 6, 1999]

Appendix A to Part 173—Issuing Authorities and Reporting Authorities

(a) The State is the issuing authority and reporting authority in:

STATE

Alabama—AL.
Alaska—AK.
American Samoa—AS.
Arizona—AZ.
Arkansas—AR.
California—CF.
Colorado—CL.
Connecticut—CT.
Delaware—DL.
District of Columbia—DC.
Florida—FL.
Georgia—GA.
Guam—GU.
Hawaii—HA.
Idaho—ID.
Illinois—IL.
Indiana—IN.
Iowa—IA.
Kansas—KA.
Kentucky—KY.

Louisiana—LA.
Maine—ME.
Maryland—MD.
Massachusetts—MS.
Michigan—MC.
Minnesota—MN.
Mississippi—MI.
Missouri—MO.
Montana—MT.
Nebraska—NB.
Nevada—NV.
New Hampshire—NH.
New Jersey—NJ.
New Mexico—NM.
New York—NY.
North Carolina—NC.
North Dakota—ND.
Northern Mariana Islands—CM.
Ohio—OH.
Oklahoma—OK.
Oregon—OR.
Pennsylvania—PA.
Puerto Rico—PR.
Rhode Island—RI.
South Carolina—SC.
South Dakota—SD.
Tennessee—TN.
Texas—TX.
Utah—UT.
Vermont—VT.
Virginia—VA.
Virgin Islands—VI.
Washington—WN.
West Virginia—WV.
Wisconsin—WS.
Wyoming—WY.

(b) The Coast Guard is the issuing authority and reporting authority in:

STATE

[Reserved]

(c) The abbreviations following the names of the State listed in paragraphs (a) and (b) are the two capital letters that must be used in the number format to denote the State of principal operation as prescribed in § 174.23 of this chapter.

[CGD 72–54R, 37 FR 21399, Oct. 7, 1972, as amended by CGD 76–076, 41 FR 23401, June 10, 1976; CGD 89–048, 54 FR 27002, June 27, 1989; USCG–2001–9286, 66 FR 33642, June 25, 2001; USCG–2003–14963, 77 FR 18701, Mar. 28, 2012]

PART 174—STATE NUMBERING AND CASUALTY REPORTING SYSTEMS

Subpart A—General

Sec.
174.1 Applicability; preemptive effect.
174.3 Definitions.
174.5 Requirements for approval.
174.7 Approval procedure.

Subpart B—Numbering System Requirements

174.11 Applicability of State numbering system.
174.13 Owner or operator requirements.
174.14 State numbering system optional sections.
174.15 Validation stickers.
174.16 Verification of hull identification numbers (HINs).
174.17 Contents of application for certificate of number.
174.19 Contents of a certificate of number.
174.21 Temporary certificates.
174.23 Form of number.
174.25 Size of certificate of number.
174.27 Duration of certificate of number.
174.29 Temporary certificate of number.
174.31 Terms imposed by States for numbering of vessels.

Subpart C—Casualty Reporting System Requirements

174.101 Applicability of State casualty reporting system.
174.103 Administration.
174.105 Owner or operator casualty reporting requirements.
174.106 State casualty reporting system optional sections.
174.107 Contents of casualty or accident report form.

Subpart D—State Reports

174.121 Forwarding of casualty or accident reports.
174.123 Annual report of numbered vessels.
174.125 Coast Guard address.

AUTHORITY: 46 U.S.C. 6101 and 12302; Department of Homeland Security Delegation No. 0170.1 (92).

SOURCE: CGD 72–54R, 37 FR 21402, Oct. 7, 1972, unless otherwise noted.

Subpart A—General

§ 174.1 Applicability; preemptive effect.

This part establishes a standard numbering system for vessels and a uniform vessel casualty reporting system for vessels by prescribing requirements applicable to the States for the approval of State numbering systems. The regulations in subparts A, B, and D of this part have preemptive effect over conflicting State or local regulation. The regulations in subpart C of this part have preemptive effect over State or local regulation within the same field, except to the extent that Congress requires the Coast Guard to allow State casualty reporting systems pursuant to 46 U.S.C. chapter 131.

[USCG–2003–14963, 77 FR 18701, Mar. 28, 2012]

§ 174.3 Definitions.

As used in this part—

Airboat means a vessel that is typically flat-bottomed and propelled by an aircraft-type propeller powered by an engine.

Auxiliary sail means a vessel with sail as its primary method of propulsion and mechanical propulsion as its secondary method.

Cabin motorboat means a vessel propelled by propulsion machinery and providing enclosed spaces inside its structure.

Certificate of number means the certificate required by 33 CFR 173.21.

Charter fishing means a vessel carrying a passenger(s) for hire who is (are) engaged in recreational fishing.

Commercial fishing means a vessel that commercially engages in the catching, taking, or harvesting of fish which, either in whole or in part, is intended to enter commerce through sale, barter, or trade.

Houseboat means a motorized vessel that is usually non-planing and designed primarily for multi-purpose accommodation spaces with low freeboard and little or no foredeck or cockpit.

Hull identification number or *HIN* means a number required by 33 CFR 181.23.

Inboard, in the context of an engine, means an engine mounted inside the confines of a vessel which powers a drive shaft that turns a water jet impeller or that runs through the bottom of the hull and is attached to a propeller at the other end.

Inflatable boat means a vessel that uses air-filled flexible fabric for buoyancy.

Open motorboat means a vessel equipped with propulsion machinery and having an open load carrying area that does not have a continuous deck to protect it from the entry of water.

Operate means use, navigate, or employ.

Operator means the person who is in control or in charge of a vessel while it is in operation.

Outboard, in the context of an engine, means an engine with propeller or water jet integrally attached, which is usually mounted at the stern of a vessel.

Owner means a person, other than a secured party, having property rights in or title to a vessel, including persons entitled to use or possess a vessel subject to a security interest in another person, but excluding lessees under a lease not intended as security.

Paddlecraft means a vessel powered only by its occupants, using a single or double bladed paddle as a lever without the aid of a fulcrum provided by oarlocks, thole pins, crutches, or similar arrangements.

Person means an individual, firm, partnership, corporation, company, association, joint-stock association, or governmental entity and includes a trustee, receiver, assignee, or similar representative of any of them.

Personal watercraft means a vessel propelled by a water-jet pump or other machinery as its primary source of motive power and designed to be operated by a person sitting, standing, or kneeling on the vessel, rather than sitting or standing within the vessel's hull.

Pod drive means an engine mounted in front of the transom of a vessel and attached through the bottom of the hull to a steerable propulsion unit.

Pontoon boat means a vessel with a broad, flat deck that is affixed on top of closed cylinders which are used for buoyancy, the basic design of which is usually implemented with two rows of floats as a catamaran or with three rows of floats as a trimaran.

Reporting authority means a State listed in 33 CFR part 173, Appendix A, as having a numbering system approved by the Coast Guard or the Coast Guard itself when a numbering system has not been approved.

Rowboat means an open vessel manually propelled by oars.

Sail only means a vessel propelled only by sails.

State means a State of the United States, the District of Columbia, American Samoa, Guam, the Commonwealth of the Northern Mariana Islands, Puerto Rico, the U.S. Virgin Islands, and any other territory or possession of the United States.

State of principal operation means the State in whose waters a vessel is or will be operated most during a calendar year.

Sterndrive means an engine, powering a propeller using shifts and gears, mounted in front of the transom of a vessel and attached through the transom to a drive unit that is similar to the lower unit of an outboard, which may also be known as an inboard-outdrive or an inboard-outboard.

Vessel means every description of watercraft or other artificial contrivance used, or capable of being used, as a means of transportation on water.

[USCG–2003–14963, 77 FR 18701, Mar. 28, 2012]

§ 174.5 Requirements for approval.

The Commandant approves a State numbering system if he or she finds, after examination of the information submitted by a State, that the State numbering system and vessel casualty reporting system meet the requirements of this part, 46 U.S.C. 6102, and 46 U.S.C. Chapter 123.

[CGD 97–023, 62 FR 33365, June 19, 1997, as amended by USCG–1998–3799, 63 FR 35533, June 30, 1998; USCG–2003–15404, 68 FR 37742, June 25, 2003]

§ 174.7 Approval procedure.

To obtain approval by the Commandant of a numbering system or of any revision to a numbering system, an authorized representative of the State must submit three copies of the State laws, regulations, forms, and policy statements, if any, that pertain to the numbering system or revision to Office of Auxiliary and Boating Safety (CG–542), 2100 2nd St. SW., Stop 7581, Washington, DC 20593–7581.

[CGD 72–54R, 37 FR 21402, Oct. 7, 1972, as amended by CGD 82–010, 48 FR 8273, Feb. 28, 1983; CGD 88–052, 53 FR 25122, July 1, 1988; CGD 96–026, 61 FR 33669, June 28, 1996; USCG–2008–0179, 73 FR 35024, June 19, 2008; USCG–2010–0351, 75 FR 36287, June 25, 2010]

Subpart B—Numbering System Requirements

§ 174.11 Applicability of State numbering system.

(a) Except as allowed in paragraph (c) of this section, a State numbering system must require the numbering of vessels to which § 173.11 of this chapter applies.

(b) A State numbering system may require the numbering of any vessel subject to the jurisdiction of the State unless prohibited by the regulations in Part 173 of this chapter.

(c) A State numbering system may exempt from its numbering requirements any vessel or class of vessels to which § 173.13 of this chapter applies.

§ 174.13 Owner or operator requirements.

A State numbering system must contain the requirements applicable to an owner or a person operating a vessel that are prescribed in the following sections of Part 173:

(a) Paragraph (a) of § 173.15 *Vessel number required*.

(b) Section 173.19 *Other numbers prohibited*.

(c) Paragraph (a) of § 173.21 *Certificate of number required*.

(d) Section 173.23 *Inspection of certificate*.

(e) Section 173.25 *Location of certificate of number*.

(f) Section 173.29 *Notification of issuing authority*.

(g) Section 173.71 *Application for certificate of number*.

(h) Section 173.73 *Duplicate certificate of number*.

(i) Section 173.77 *Validity of certificate of number*.

(46 U.S.C. 1451, 1467, 1488; 49 CFR 1.46(n)(1))

[CGD 77–117, 44 FR 42195, July 19, 1979]

§ 174.14 State numbering system optional sections.

In addition to the requirements in § 174.13, a State numbering system may contain any of the other requirements applicable to a vessel owner or operator prescribed in Part 173.

(46 U.S.C. 1451, 1467, 1488; 49 CFR 1.46(n)(1))

[CGD 77–117, 44 FR 42195, July 19, 1979, as amended by USCG–1999–5832, 64 FR 34715, June 29, 1999]

§ 174.15 Validation stickers.

(a) If a State issues validation stickers, its numbering system must contain the requirements that stickers must be displayed within 6 inches of the number and the stickers must meet the requirements in paragraphs (b) and (c) of this section.

(b) Validation stickers must be approximately 3 inches square.

(c) The year in which each validation sticker expires must be indicated by the colors, blue, international orange, green, and red, in rotation beginning with blue for stickers that expire in 1973.

§ 174.16 Verification of hull identification numbers (HINs).

(a) As used in this section, ''action'' means an action by an issuing authority listed in 33 CFR part 173, Appendix A, to issue, renew, or update the ownership information for a certificate of number under this part but does not include the issuance of a temporary certificate under 33 CFR 174.21.

(b) As of January 1, 2017, before taking any action relating to a vessel imported or manufactured on or after November 1, 1972, the issuing authority must determine whether the vessel has a primary HIN meeting the requirements of 33 CFR part 181, subpart C.

(c) If, pursuant to paragraph (b) of this section, the issuing authority determines that the vessel does not have a primary HIN meeting the requirements of 33 CFR part 181, subpart C, then before taking any action the issuing authority must—

(1) Assign such a primary HIN to the vessel; and

(2) Verify that the owner of the vessel has permanently affixed the assigned primary HIN to the vessel in compliance with 33 CFR part 181, subpart C.

[USCG–2003–14963, 77 FR 18701, Mar. 28, 2012]

§ 174.17 Contents of application for certificate of number.

(a) An application for a certificate of number must contain the following information:

(1) Name of owner.

(2) Address of owner, including ZIP code.

(3) Owner identifier, which must be the owner's tax identification number, date of birth together with driver's license number, or date of birth together with other unique number.

(4) State of principal operation.

(5) Number previously issued by an issuing authority.

(6) Application type: Authorized terms are ''new number'', ''renewal of number'', or ''transfer of ownership''.

(7) Primary operation: Authorized terms are, ''charter fishing'', ''commercial fishing'', ''commercial passenger carrying'', ''dealer or manufacturer demonstration'', ''other commercial operation'', ''pleasure'', or ''rent or lease''.

(8) Make and model of vessel.

(9) Model year.

(10) Hull identification number, if any.

(11) Overall length of vessel.

(12) Vessel type: Authorized terms are ''air boat'', ''auxiliary sail'', ''cabin motorboat'', ''houseboat'', ''inflatable boat'', ''open motorboat'', ''paddlecraft'', ''personal watercraft'', ''pontoon boat'', ''rowboat'', ''sail only'', or ''other''.

(13) Hull material: Authorized terms are ''aluminum'', ''fiberglass'', ''plastic'', ''rubber/vinyl/canvas'', ''steel'', ''wood'', or ''other''.

(14) Propulsion type: Authorized terms are ''air thrust'', ''manual'', ''propeller'', ''sail'', ''water jet'', or ''other''.

(15) Engine drive type: Authorized terms are ''inboard'', ''outboard'', ''pod drive'', ''sterndrive'', or ''other''.

(16) Fuel: Authorized terms are ''electric'', ''diesel'', ''gas'', or ''other''.

(17) Signature of the owner.

(b)(1) An application made by a manufacturer or dealer for a number that is to be temporarily affixed to a vessel for demonstration or test purposes may omit the information under paragraphs (a)(9) through (a)(17) of this section.

(2) An application made by an owner of a vessel without propulsion machinery may omit the information under paragraphs (a)(16) and (a)(17) of this section.

(c) For an issuing authority listed in 33 CFR part 173, Appendix A on April 27, 2012, the requirements of paragraphs (a) and (b) of this section apply on January 1, 2017. Between April 27, 2012 and January 1, 2017, the issuing authority may continue to accept applications containing the contents required by that reporting authority prior to April 27, 2012.

[USCG–2003–14963, 77 FR 18702, Mar. 28, 2012]

§ 174.19 Contents of a certificate of number.

(a) Except as allowed in paragraph (b) of this section, each certificate of number must contain the following information:

(1) Number issued to the vessel.

(2) Expiration date of the certificate.

(3) State of principal operation.

(4) Name of owner.

(5) Address of owner, including ZIP code.

(6) Primary operation: Authorized terms are, ''charter fishing'', ''commercial fishing'', ''commercial passenger carrying'', ''dealer or manufacturer demonstration'', ''other commercial operation'', ''pleasure'', or ''rent or lease''.

(7) Hull identification number, if any.

(8) Make and model of vessel.

(9) Model year.

(10) Overall length of vessel.

(11) Vessel type: Authorized terms are ''air boat'', ''auxiliary sail'', ''cabin motorboat'', ''houseboat'', ''inflatable boat'', ''open motorboat'', ''paddlecraft'', ''personal watercraft'', ''pontoon boat'', ''rowboat'', ''sail only'', or ''other''.

(12) Hull material: Authorized terms are ''aluminum'', ''fiberglass'', ''plastic'', ''rubber/vinyl/canvas'', ''steel'', ''wood'', or ''other''.

(13) Propulsion type: Authorized terms are ''air thrust'', ''manual'', ''propeller'', ''sail'', ''water jet'', or ''other''.

(14) Engine drive type: Authorized terms are ''inboard'', ''outboard'', ''pod drive'', ''sterndrive'', or ''other''.

(15) Fuel: Authorized terms are ''electric'', ''diesel'', ''gas'', or ''other''.

(b)(1) A certificate of number issued to a manufacturer or dealer for use on a vessel for test or demonstration purposes may omit the information under paragraphs (a)(7) through (a)(15) of this section if the word ''manufacturer'' or ''dealer'' is plainly marked on the certificate.

(2) A certificate of number issued for a vessel without propulsion machinery may omit paragraphs (a)(14) and (a)(15) of this section if the words ''manual vessel'' are plainly marked on the certificate.

(3) An issuing authority may print on the certificate of number a quotation of State boating regulations or other boating-related information, such as safety reminders, registration, or law enforcement contact information.

(c) For an issuing authority listed in Appendix A of this part on April 27, 2012, the requirements of paragraphs (a) and (b) of this section apply on January 1, 2017. Between April 27, 2012 and January 1, 2017, the issuing authority may continue to issue certificates of number containing the contents in effect on April 27, 2012.

[USCG–2003–14963, 77 FR 18702, Mar. 28, 2012]

§ 174.21 Temporary certificates.

(a) An issuing authority may issue a temporary certificate of number, valid for no more than 60 days from its date of issuance.

(b) Each temporary certificate must contain the following information:

(1) Vessel's hull identification number, if any.

(2) Make of vessel.

(3) Overall length of vessel.

(4) Type of propulsion.

(5) State in which vessel is principally operated.

(6) Name of owner.

(7) Address of owner, including ZIP code.

(8) Signature of owner.

(9) Date of issuance.

(10) Notice to the owner that the temporary certificate is valid for the time it specifies, not to exceed 60 days from the date of issuance.

(c) For an issuing authority listed in 33 CFR part 173, Appendix A on April 27, 2012, the requirements of paragraph (b) of this section apply on January 1, 2017. Between April 27, 2012 and January 1, 2017, the issuing authority may continue to issue temporary certificates containing the contents in effect on April 27, 2012.

[USCG–2003–14963, 77 FR 18702, Mar. 28, 2012]

§ 174.23 Form of number.

(a) Each number must consist of two capital letters denoting the State of the issuing authority, as specified in Appendix A of Part 173 of this chapter, followed by—

(1) Not more than four numerals followed by not more than two capital letters (example: NH 1234 BD); or

(2) Not more than three numerals followed by not more than three capital letters (example: WN 567 EFG).

(b) A number suffix must not include the letters ''I'', ''O'', or ''Q,'' which may be mistaken for numerals.

§ 174.25 Size of certificate of number.

Each certificate of number must be approximately 2½ by 3½ inches.

§ 174.27 Duration of certificate of number.

A certificate of number must not be valid for more than 3 years.

§ 174.29 Temporary certificate of number.

A State may issue a temporary certificate of number that is effective for not more than 60 days.

§ 174.31 Terms imposed by States for numbering of vessels.

A State numbering system may condition the issuance of a certificate of number on—

(a) Title to, or other proof of ownership of a vessel except a recreational-type public vessel of the United States; or

(b) Proof of liability insurance for a vessel except a recreational-type public vessel of the United States; or

(c) The payment of State or local taxes, except for a recreational-type public vessel of the United States.

[CGD 72–54R, 37 FR 21402, Oct. 7, 1972, as amended by USCG–2003–15708, 70 FR 13105, Mar. 18, 2005]

Subpart C—Casualty Reporting System Requirements

§ 174.101 Applicability of State casualty reporting system.

(a) A State casualty reporting system must require the reporting of vessel casualties and accidents involving vessels to which § 173.51 of this chapter applies.

(b) The State casualty reporting system may also require vessel casualty or accident reports for property damage in amounts less than that required under § 173.55 of this chapter.

(46 U.S.C. 1486; 49 CFR 1.46(n)(1))

[CGD 72–54R, 37 FR 21402, Oct. 7, 1972, as amended by CGD 76–155, 44 FR 5309, Mar. 25, 1979; CGD 82–015, 54 FR 5610, Feb. 6, 1989]

§ 174.103 Administration.

The State casualty reporting system must be administered by a State agency that—

(a) Will provide for the reporting of all casualties and accidents prescribed in § 173.55 of this chapter;

(b) Receives reports of vessel casualties or accidents required in § 174.101;

(c) Reviews each accident and casualty report to assure the accuracy and completeness of each report;

(d) Determines the cause of casualties and accidents reported based on information available and indicates the apparent cause on the casualty report or on an attached page;

(e) Notifies the Coast Guard, in writing, when a problem area in boating safety peculiar to the State is determined, together, with corrective measures instituted or recommended; and

(f) Reports on vessel numbering and vessel casualties and accidents as required in Subpart D of this part.

(46 U.S.C. 1486; 49 CFR 1.46(n)(1))

[CGD 72–54R, 37 FR 21402, Oct. 7, 1972, as amended by CGD 76–155, 44 FR 5309, Mar. 25, 1979]

§ 174.105 Owner or operator casualty reporting requirements.

A State casualty reporting system must contain the following requirements of Part 173 applicable to an owner or a person operating a vessel:

(a) Section 173.55 *Report of casualty or accident*.

(b) Section 173.57 *Casualty or accident report*.

(c) Section 173.59 *Where to report*.

(46 U.S.C. 1451, 1467, 1488; 49 CFR 1.46 (n)(1))

[CGD 77–117, 44 FR 42195, July 19, 1979]

§ 174.106 State casualty reporting system optional sections.

In addition to the requirements in § 174.105, a State casualty reporting system may contain any of the other requirements applicable to a vessel owner or operator prescribed in Part 173.

(46 U.S.C. 1451, 1467, 1488; 49 CFR 1.46 (n)(1))

[CGD 77–117, 44 FR 42195, July 19, 1979, as amended by USCG–1999–5832, 64 FR 34715, June 29, 1999]

§ 174.107 Contents of casualty or accident report form.

Each form for reporting a vessel casualty or accident must contain the information required in § 173.57 of this chapter.

Subpart D—State Reports

§ 174.121 Forwarding of casualty or accident reports.

Within 30 days of the receipt of a casualty or accident report, the reporting authority receiving the report must forward a paper or electronic copy of that report to the Commandant (CG–5422), U.S. Coast Guard, 2100 Second St. SW., Stop 7581, Washington, DC 20593–7581.

[USCG–2003–14963, 77 FR 18702, Mar. 28, 2012]

§ 174.123 Annual report of numbered vessels.

Before March 1 of each year, each State that has an approved numbering system must prepare and submit Coast Guard Form CGHQ–3923, Report of Certificates of Number Issued to Boats, to the Coast Guard.

§ 174.125 Coast Guard address.

The report required by § 174.123 of this subpart must be sent to the Commandant (CG–5422), U.S. Coast Guard, 2100 Second St. SW., Stop 7581, Washington, DC 20593–7581.

[USCG–2003–14963, 77 FR 18703, Mar. 28, 2012]

PART 175—EQUIPMENT REQUIREMENTS

Subpart A—General

Sec.
175.1 Applicability.
175.3 Definitions.
175.5 Exemption from preemption.

Subpart B—Personal Flotation Devices

175.11 Applicability.
175.13 Definitions.
175.15 Personal flotation devices required.
175.17 Exemptions.
175.19 Stowage.
175.21 Condition; size and fit; approval marking.
175.23 Serviceable conditions.
175.25 Enforcement of State requirements for children to wear personal flotation devices.

Subpart C—Visual Distress Signals

175.101 Applicability.
175.105 Definitions.
175.110 Visual distress signals required.
175.113 Launchers.
175.115 Exceptions.
175.120 Stowage.
175.125 Serviceability.
175.128 Marking.
175.130 Visual distress signals accepted.
175.135 Existing equipment.
175.140 Prohibited use.

Subpart D—Ventilation

175.201 Ventilation.

AUTHORITY: 46 U.S.C. 4302; Department of Homeland Security Delegation No. 0170.1.

SOURCE: CGD 72–120R, 38 FR 8115, Mar. 28, 1973, unless otherwise noted.

Subpart A—General

§ 175.1 Applicability.

This part prescribes rules governing the use of boats on waters subject to the jurisdiction of the United States and on the high seas beyond the territorial seas for boats owned in the United States except:

(a) Foreign boats temporarily using waters subject to U.S. jurisdiction;

(b) Military or public boats of the United States, except recreational-type public vessels;

(c) A boat whose owner is a State or subdivision thereof, which is used principally for governmental purposes, and which is clearly identifiable as such;

(d) Ship's lifeboats.

(e) Seaplanes on the water.

[CGD 72–120R, 38 FR 8115, Mar. 28, 1973, as amended by CGD 92–045, 58 FR 41607, Aug. 4, 1993]

§ 175.3 Definitions.

As used in this part:

Boat means any vessel—

(1) Manufactured or used primarily for noncommercial use;

(2) Leased, rented, or chartered to another for the latter's noncommercial use; or

(3) Operated as an uninspected passenger vessel subject to the requirements of 46 CFR chapter I, subchapter C.

Passenger means an individual carried on a vessel except—

(1) The owner or an individual representative of the owner or, in the case of a vessel chartered without a crew, an individual charterer, or an individual representative of the charterer;

(2) The master or operator of a recreational vessel; or

(3) A member of the crew engaged in the business of the vessel, who has not contributed consideration for carriage, and who is paid for onboard services.

Racing shell, rowing scull, racing canoe, and racing kayak means a manually propelled vessel that is recognized by national or international racing associations for use in competitive racing and one in which all occupants row, scull, or paddle, with the exception of a coxswain, if one is provided, and is not designed to carry and does not carry any equipment not solely for competitive racing.

Recreational vessel means any vessel being manufactured or operated primarily for pleasure, or leased, rented, or chartered to another for the latter's pleasure. It does not include a vessel engaged in the carriage of passengers-for-hire as defined in 46 CFR chapter I, subchapter C, or in other subchapters of this title.

Sailboard means a sail propelled vessel with no freeboard and equipped with a swivel mounted mast not secured to a hull by guys or stays.

State means a State or Territory of the United States of America, whether a State of the United States, American Samoa, the Commonwealth of the Northern Marianas Islands, the District of Columbia, Guam, Puerto Rico, or the United States Virgin Islands.

Use means operate, navigate, or employ.

Vessel includes every description of watercraft used or capable of being used as a means of transportation on the water.

[CGD 92–045, 58 FR 41607, Aug. 4, 1993, as amended by USCG–1999–5040, 67 FR 34759, May 15, 2002; USCG–2000–8589, 67 FR 42493, June 24, 2002]

§ 175.5 Exemption from preemption.

The States are exempted from preemption by Federal regulations when establishing, continuing in effect, or enforcing State laws and regulations on the wearing or the carriage of personal flotation devices directly related to the following subject areas within the jurisdictional boundaries of the State:

(a) Children on board any vessel;

(b) Operating a canoe or kayak;

(c) Operating a sailboard; and

(d) Operating a personal watercraft.

[CGD 92–045, 58 FR 41608, Aug. 4, 1993]

Subpart B—Personal Flotation Devices

§ 175.11 Applicability.

This subpart applies to all recreational vessels that are propelled or controlled by machinery, sails, oars, paddles, poles, or another vessel.

[CGD 92–045, 58 FR 41608, Aug. 4, 1993]

§ 175.13 Definitions.

As used in this subpart:

(a) ''Personal flotation device'' means a device that is approved by the Commandant under 46 CFR Part 160.

(b) ''PFD'' means ''personal flotation device''.

§ 175.15 Personal flotation devices required.

Except as provided in § 175.17 and 175.25:

(a) No person may use a recreational vessel unless at least one PFD of the following types is on board for each person:

(1) Type I PFD;

(2) Type II PFD; or

(3) Type III PFD.

(b) No person may use a recreational vessel 16 feet or more in length unless one Type IV PFD is on board in addition to the total number of PFDs required in paragraph (a) of this section.

(c) No person may operate a recreational vessel under way with any child under 13 years old aboard unless each such child is either—

(1) Wearing an appropriate PFD approved by the Coast Guard; or

(2) Below decks or in an enclosed cabin.

[CGD 81–023, 55 FR 32034, Aug. 6, 1990, as amended by CGD 92–045, 58 FR 41608, Aug. 4, 1993; USCG–2000–8589, 67 FR 42493, June 24, 2002]

§ 175.17 Exemptions.

(a) A Type V PFD may be carried in lieu of any PFD required under § 175.15, provided:

(1) The approval label on the Type V PFD indicates that the device is approved:

(i) For the activity in which the vessel is being used; or

(ii) As a substitute for a PFD of the Type required on the vessel in use;

(2) The PFD is used in accordance with any requirements on the approval label; and

(3) The PFD is used in accordance with requirements in its owner's manual, if the approval label makes reference to such a manual.

(b) Canoes and kayaks 16 feet in length and over are exempted from the requirements for carriage of the additional Type IV PFD required under § 175.15(b).

(c) Racing shells, rowing sculls, racing canoes and racing kayaks are exempted from the requirements for carriage of any Type PFD required under § 175.15.

(d) Sailboards are exempted from the requirements for carriage of any Type PFD required under § 175.15.

(e) Vessels of the United States used by foreign competitors while practicing for or racing in competition are exempted from the carriage of any PFD required under § 175.15, provided the vessel carries one of the sponsoring foreign country's acceptable flotation devices for each foreign competitor on board.

[CGD 92–045, 58 FR 41608, Aug. 4, 1993; 58 FR 51576, Oct. 4, 1993, as amended by CGD 97–023, 62 FR 33365, June 19, 1997; USCG–1998–3799, 63 FR 35533, June 30, 1998]

§ 175.19 Stowage.

(a) No person may use a recreational boat unless each Type I, II, or III PFD required by § 175.15 of this part, or equivalent type allowed by § 175.17 of this part, is readily accessible.

(b) No person may use a recreational boat unless each Type IV PFD required by § 175.15 of this part, or equivalent type allowed by § 175.17 of this part, is immediately available.

[CGD 81–023, 55 FR 32034, Aug. 6, 1990]

§ 175.21 Condition; size and fit; approval marking.

No person may use a recreational boat unless each PFD required by § 175.15 of this part or allowed by § 175.17 of this part is:

(a) In serviceable condition as provided in § 175.23;

(b) Of an appropriate size and fit for the intended wearer, as marked on the approval label; and

(c) Legibly marked with its approval number, as specified in 46 CFR part 160.

[CGD 81–023, 55 FR 32034, Aug. 6, 1990, as amended by CGD93–055, 61 FR 13926, Mar. 28, 1996]

§ 175.23 Serviceable condition.

A PFD is considered to be in serviceable condition for purposes of § 175.21(a) only if the following conditions are met:

(a) No PFD may exhibit deterioration that could diminish the performance of the PFD, including—

(1) Metal or plastic hardware used to secure the PFD on the wearer that is broken, deformed, or weakened by corrosion;

(2) Webbings or straps used to secure the PFD on the wearer that are ripped, torn, or which have become separated from an attachment point on the PFD; or

(3) Any other rotted or deteriorated structural component that fails when tugged.

(b) In addition to meeting the requirements of paragraph (a) of this section, no inherently buoyant PFD, including the inherently buoyant components of a hybrid inflatable PFD, may exhibit—

(1) Rips, tears, or open seams in fabric or coatings, that are large enough to allow the loss of buoyant material;

(2) Buoyant material that has become hardened, non-resilient, permanently compressed, waterlogged, oil-soaked, or which shows evidence of fungus or mildew; or

(3) Loss of buoyant material or buoyant material that is not securely held in position.

(c) In addition to meeting the requirements of paragraph (a) of this section, an inflatable PFD, including the inflatable components of a hybrid inflatable PFD, must be equipped with—

(1) Except as provided in paragraph (d) of this section, a properly armed inflation mechanism, complete with a full inflation medium cartridge and all

status indicators showing that the inflation mechanism is properly armed;

(2) Inflatable chambers that are all capable of holding air;

(3) Oral inflation tubes that are not blocked, detached, or broken;

(4) A manual inflation lanyard or lever that is not inaccessible, broken, or missing; and

(5) Inflator status indicators that are not broken or otherwise non-functional.

(d) The inflation system of an inflatable PFD need not be armed when the PFD is worn inflated and otherwise meets the requirements of paragraphs (a) and (c) of this section.

[CGD 93–055, 61 FR 13926, Mar. 28, 1996]

§ 175.25 Enforcement of State requirements for children to wear personal flotation devices.

(a) This section applies to operators of recreational vessels on waters subject to the jurisdiction of any State that has established by statute a requirement for children of a certain age to wear an appropriate PFD approved by the Coast Guard, while aboard a recreational vessel.

(b) If the applicable State statute establishes any requirement for children of a certain age to wear an appropriate PFD approved by the Coast Guard, then that requirement applies on the waters subject to the State's jurisdiction instead of the requirement provided in § 175.15(c) of this part.

[USCG–2000–8589, 69 FR 45591, July 30, 2004]

Subpart C—Visual Distress Signals

SOURCE: CGD 76–183, 44 FR 73024, Dec. 17, 1979, unless otherwise noted.

§ 175.101 Applicability.

This subpart applies to boats on the coastal waters of the United States and on the high seas beyond the territorial seas for boats owned in the United States.

[CGD 76–183, 44 FR 73024, Dec. 17, 1979, as amended by USCG–1998–3799, 63 FR 35534, June 30, 1998]

§ 175.105 Definitions.

(a) *Visual distress signal* means a device that is approved by the Commandant under 46 CFR Part 160 or certified by the manufacturer under 46 CFR Parts 160 and 161.

(b) *Coastal waters* means:

(1) The U.S. waters of the Great Lakes (Lake Erie, Huron, Michigan, Ontario, and Superior);

(2) The territorial seas of the United States; and

(3) Those waters directly connected to the Great Lakes and territorial seas (*i.e.*, bays, sounds, harbors, rivers, inlets, etc.) where any entrance exceeds 2 nautical miles between opposite shorelines to the first point where the largest distance between shorelines narrows to 2 miles, as shown on the current edition of the appropriate National Ocean Service chart used for navigation. Shorelines of islands or points of land present within a waterway are considered when determining the distance between opposite shorelines.

[CGD 76–183, 44 FR 73024, Dec. 17, 1979, as amended by CGD 82–073, 49 FR 7119, Feb. 27, 1984; 49 FR 20815, May 17, 1984]

§ 175.110 Visual distress signals required.

(a) No person may use a boat 16 feet or more in length, or any boat operating as an uninspected passenger vessel subject to the requirements of 46 CFR chapter I, subchapter C, unless visual distress signals selected from the list in § 175.130 or the alternatives in § 175.135, in the number required, are onboard. Devices suitable for day use and devices suitable for night use, or devices suitable for both day and night use, must be carried.

(b) Between sunset and sunrise, no person may use a boat less than 16 feet in length unless visual distress signals suitable for night use, selected from the list in § 175.130 or § 175.135, in the number required, are on board.

[CGD 76–183, 44 FR 73024, Dec. 17, 1979, as amended by USCG–1999–5040, 67 FR 34760, May 15, 2002]

§ 175.113 Launchers.

(a) When a visual distress signal carried to meet the requirements of § 175.110 requires a launcher to activate, then a launcher approved under 46 CFR 160.028 must also be carried.

§ 175.115 Exceptions.

The following persons need not comply with § 175.110; however, each must carry on board visual distress signals suitable for night use, selected from the list in § 175.130 or § 175.135, in the number required, between sunset and sunrise:

(a) A person competing in any organized marine parade, regatta, race, or similar event;

(b) A person using a manually propelled boat; or

(c) A person using a sailboat of completely open construction, not equipped with propulsion machinery, under 26′ in length.

§ 175.120 Stowage.

No person may use a boat unless the visual distress signals required by § 175.110 are readily accessible.

[CGD 93–055, 61 FR 13926, Mar. 28, 1996, as amended by USCG–1999–5832, 64 FR 34715, June 29, 1999]

§ 175.125 Serviceability.

No person may use a boat unless each signal required by § 175.110 is in serviceable condition and the service life of the signal, if indicated by a date marked on the signal, has not expired.

[CGD 93–055, 61 FR 13926, Mar. 28, 1996, as amended by USCG–1999–5832, 64 FR 34715, June 29, 1999]

§ 175.128 Marking.

No person may use a boat unless each signal required by § 175.110 is legibly marked with the approval number or certification statement as specified in 46 CFR Parts 160 and 161.

[CGD 93–055, 61 FR 13926, Mar. 28, 1996, as amended by USCG–1999–5832, 64 FR 34715, June 29, 1999]

§ 175.130 Visual distress signals accepted.

(a) Any of the following signals, when carried in the number required, can be used to meet the requirements of § 175.110:

(1) An electric distress light meeting the standards of 46 CFR 161.013. One is required to meet the night only requirement.

(2) An orange flag meeting the standards of 46 CFR 160.072. One is required to meet the day only requirement.

(3) Pyrotechnics meeting the standards noted in Table 175.130.

(b) Any combination of signal devices selected from the types noted in paragraphs (a) (1), (2) and (3) of this section, when carried in the number required, may be used to meet both day and night requirements. *Examples*—the combination of two hand held red flares (160.021), and one parachute red flare (160.024 or 160.036) meets both day and night requirements. Three hand held orange smoke (160.037) with one electric distress light (161.013) meet both day and night requirements.

TABLE 175.130—PYROTECHNIC SIGNAL DEVICES

Approval number under 46 CFR	Device description	Meets requirement for	Number required
160.021	Hand Held Red Flare Distress Signals [3].	Day and Night	3
160.022	Floating Orange Smoke Distress Signals.	Day Only	3
160.024	Parachute Red Flare Distress Signals.	Day and Night [1]	3
160.036	Hand-Held Rocket-Propelled Parachute Red Flare Distress Signals.	Day and Night	3
160.037	Hand-Held Orange Smoke Distress Signals.	Day Only	3
160.057	Floating Orange Smoke Distress Signals.	Day Only	3
160.066	Distress Signal for Boats, Red Aerial Pyrotechnic Flare.	Day and Night [2]	3

[1] These signals require use in combination with a suitable launching device approved under 46 CFR 160.028.

[2] These devices may be either meteor or parachute assisted type. Some of these signals may require use in combination with a suitable launching device approved under 46 CFR 160.028.

[3] Must have manufacture date of 1 Oct. 1980 or later.

[CGD 81–038–A, 47 FR 24548, June 7, 1982]

§ 175.135 Existing equipment.

Launchers manufactured before 1 January, 1981, which do not have approval numbers are acceptable for use with meteor or parachute signals listed in Table 175.130 under § 175.130 as long

as they remain in serviceable condition.

[CGD 76–183, 44 FR 73024, Dec. 17, 1979, as amended by CGD 81–038–A, 47 FR 24548, June 7, 1982; USCG–1998–3799, 63 FR 35534, June 30, 1998]

§ 175.140 Prohibited use.

No person in a boat shall display a visual distress signal on waters to which this subpart applies under any circumstance except a situation where assistance is needed because of immediate or potential danger to the persons on board.

Subpart D—Ventilation

§ 175.201 Ventilation.

No person may operate a boat built after July 31, 1980, that has a gasoline engine for electrical generation, mechanical power, or propulsion unless it is equipped with an operable ventilation system that meets the requirements of 33 CFR 183.610 (a), (b), (d), (e), and (f) and 183.620(a).

[CGD 76–082, 44 FR 73027, Dec. 17, 1979]

PART 177—CORRECTION OF ESPECIALLY HAZARDOUS CONDITIONS

Sec.
177.01 Purpose and applicability.
177.03 Definitions.
177.04 Order of unsafe condition.
177.05 Action to correct an especially hazardous condition.
177.07 Other unsafe conditions.
177.08 Penalties.

AUTHORITY: 46 U.S.C. 4302, 4311; Pub. L. 103–206, 107 Stat. 2439.

SOURCE: CGD 72–71R, 37 FR 13347, July 7, 1972, unless otherwise noted.

§ 177.01 Purpose and applicability.

This part prescribes rules to implement section 4308 of Title 46 United States Code which governs the correction of especially hazardous conditions on recreational vessels and uninspected passenger vessels on waters subject to the jurisdiction of the United States and, for a vessel owned in the United States, on the high seas, except operators of:

(a) Foreign boats temporarily using waters subject to United States jurisdiction;

(b) Military or public boats of the United States, except recreational-type public boats;

(c) A boat whose owner is a State or subdivision thereof, which is used principally for governmental purposes and which is clearly identifiable as such;

(d) Ship's lifeboats.

[CGD 72–71R, 37 FR 13347, July 7, 1972, as amended by CGD 84–099, 52 FR 47534, Dec. 14, 1987; CGD 84–099, 53 FR 13117, Apr. 21, 1988]

§ 177.03 Definitions.

As used in this part:

(a) [Reserved]

(b) *Boat* means any vessel—

(1) Manufactured or used primarily for noncommercial use;

(2) Leased, rented, or chartered to another for the latter's noncommercial use; or

(3) Operated as an uninspected passenger vessel subject to the requirements of 46 CFR chapter I, subchapter C.

(c) *Coast Guard Boarding Officer* means a commissioned, warrant, or petty officer of the Coast Guard having authority to board any vessel under the Act of August 4, 1949, 63 Stat. 502, as amended (14 U.S.C. 89).

(d) *Operator* means the person who is in control or in charge of a boat while it is in use.

(e) *Use* means operate, navigate, or employ.

(f) *Vessel* includes every description of watercraft, other than a seaplane on the water, used or capable of being used as a means of transportation on the water.

[CGD 72–71R, 37 FR 13347, July 7, 1972, as amended by CDG 84–099, 52 FR 47534, Dec. 14, 1987; USCG–1999–5040, 67 FR 34760, May 15, 2002]

§ 177.04 Order of unsafe condition.

(a) The Commandant has redelegated to Coast Guard District Commanders, with the reservation that this authority shall not be further redelegated, the authority, under 46 U.S.C. 4308, to issue orders applicable to a specific boat within the District Commander's jurisdiction designating that boat unsafe for a specific voyage on a specific

body of water when it is determined, under the provisions of § 177.07(f), that an unsafe condition exists.

(b) Each order issued by a Coast Guard District Commander under the provisions of paragraph (a) of this section will contain:

(1) Notice that the person upon whom the order is served has the right under the Administrative Procedure Act (5 U.S.C. 553(e)), to petition for reconsideration and repeal of the order;

(2) Full title and address of the Coast Guard District Commander to whom the petition is to be submitted; and

(3) Notice that the petition should contain:

(i) The text or substance of the order which the petitioner seeks to have reconsidered and repealed;

(ii) A statement of the action sought by the petitioner;

(iii) Whatever arguments or data that are available to the petitioner to support the action sought; and

(iv) An advisement that if the petitioner desires reconsideration and repeal of the rule before a specific date, the petition should so state and give reasons why action by that date is necessary.

(c) If a Coast Guard District Commander determines that a petition submitted under the provisions of paragraph (b) of this section contains adequate justification, the District Commander will initiate prompt action to repeal the order. If the District Commander determines that repeal of the order is not justified, the District Commander will issue prompt written notice of denial to the petitioner.

[CGD 95–057, 60 FR 34150, June 30, 1995, as amended by USCG–2013–0216, 78 FR 40966, July 9, 2013]

§ 177.05 Action to correct an especially hazardous condition.

An operator of a boat who is directed by a Coast Guard Boarding Officer to take immediate and reasonable steps necessary for the safety of those aboard the vessel, under section 4308 of Title 46, United States Code, shall follow the direction of the Coast Guard Boarding Officer, which may include direction to:

(a) Correct the especially hazardous condition immediately;

(b) Proceed to a mooring, dock, or anchorage; or

(c) Suspend further use of the boat until the especially hazardous condition is corrected.

[CGD 72–71R, 37 FR 13347, July 7, 1972, as amended by CDG 84–099, 52 FR 47534, Dec. 14, 1987]

§ 177.07 Other unsafe conditions.

For the purpose of section 4308 of Title 46, United States Code, ''other unsafe condition'' means a boat:

(a) Does not display between sunset and sunrise the navigation lights prescribed by the International Regulations for Preventing Collisions at Sea, 1972 (72 COLREGS) or, when in use upon the inland waters of the United States, the Inland Navigational Rules Act of 1980 (Pub. L. 96–591), 94 Stat. 3415, 33 U.S.C. 2001, *et seq.*);

(b) That is operated by an individual who is apparently under the influence of alcohol or a dangerous drug, as defined in § 95.020 of this chapter, to the extent that, in the boarding officer's discretion, the continued operation of the vessel would create an unsafe condition.

(c) Has a fuel leakage from either the fuel system or engine, or has an accumulation of fuel in the bilges.

(d) Does not meet the applicable ventilation requirements for tanks and engine spaces prescribed by 46 CFR 25.40 (which applies to certain boats built before August 1, 1980), or Subpart K Ventilation, of 33 CFR Part 183 (which applies to boats built after July 31, 1980);

(e) Does not meet the requirements for backfire flame control prescribed by 46 CFR 25.35; or

(f) Designated manifestly unsafe for a specific voyage on a specific body of water due to:

(1) Unsuitable design or configuration, or

(2) Improper construction or inadequate material condition, or

(3) Improper or inadequate operational or safety equipment, and set forth in an order issued by a District Commander according to the provisions of § 177.04.

[CGD 72–71R, 37 FR 13347, July 7, 1972]

EDITORIAL NOTE: For FEDERAL REGISTER citations affecting § 177.07, see the List of CFR Sections Affected, which appears in the Finding Aids section of the printed volume and at *www.fdsys.gov*.

§ 177.08 Penalties.

An operator of a vessel who does not follow the directions of a Coast Guard Boarding Officer prescribed in § 177.05 is, in addition to any other penalty prescribed by law, subject to—

(a) The criminal penalties of 46 U.S.C. 4311, which provides that a person willfully operating a recreational vessel in violation of 46 U.S.C., Chapter 43 or regulations issued thereunder, shall be fined not more than $5,000, imprisoned for not more than one year, or both.

(b)(1) The civil penalties for violating 46 U.S.C. 4307(a)(1).

(2) The civil penalties of 46 U.S.C. 4311, which provides that a person violating any other provision of 46 U.S.C., Chapter 43 or regulation issued thereunder is liable to the United States Government for a civil penalty, and, if the violation involves the operation of a vessel, the vessel is liable in rem for the penalty.

[CGD 96–052, 62 FR 16703, Apr. 8, 1997, as amended by USCG–2012–0306, 77 FR 37316, June 21, 2012. Redesignated by USCG–2013–0216, 78 FR 40966, July 9, 2013]

PART 179—DEFECT NOTIFICATION

Sec.
179.01 Purpose.
179.03 Definitions.
179.05 Manufacturer discovered defects.
179.07 Notice given by ''more expeditious means.''
179.09 Contents of notification.
179.11 Defects determined by the Commandant.
179.13 Initial report to the Commandant.
179.15 Follow-up report.
179.17 Penalties.
179.19 Address of the Commandant.

AUTHORITY: 43 U.S.C. 1333; 46 U.S.C. 4302, 4307, 4310, and 4311; Pub. L 103–206, 107 Stat. 2439; 49 CFR 1.46.

SOURCE: CGD 72–55R, 37 FR 15776, Aug. 4, 1972, unless otherwise noted.

§ 179.01 Purpose.

This part prescribes rules to implement 46 U.S.C. 4310, governing the notification of defects in boats and associated equipment.

[CGD 93–055, 61 FR 13926, Mar. 28, 1996]

§ 179.03 Definitions.

Associated equipment as used in this part, means the following equipment as shipped, transferred, or sold from the place of manufacture and includes all attached parts and accessories:

(1) An inboard engine.

(2) An outboard engine.

(3) A stern drive unit.

(4) An inflatable personal flotation device approved under 46 CFR 160.076.

Boat means any vessel—

(1) Manufactured or used primarily for noncommercial use;

(2) Leased, rented, or chartered to another for the latter's noncommercial use; or

(3) Operated as an uninspected passenger vessel subject to the requirements of 46 CFR chapter I, subchapter C.

Manufacturer means any person engaged in—

(1) The manufacture, construction, or assembly of boats or associated equipment;

(2) The manufacture or construction of components for boats and associated equipment to be sold for subsequent assembly; or

(3) The importation into the United States for sale of boats, associated equipment, or components thereof.

[CGD 93–055, 61 FR 13926, Mar. 28, 1996, as amended by USCG–1999–5832, 64 FR 34716, June 29, 1999; USCG–1999–5040, 67 FR 34760, May 15, 2002]

§ 179.05 Manufacturer discovered defects.

Each manufacturer who is required to furnish a notice of a defect or failure to comply with a standard or regulation under 46 U.S.C. 4310(b), shall furnish that notice within 30 days after the manufacturer discovers or acquires information of the defect or failure to comply.

[CGD 93–055, 61 FR 13926, Mar. 28, 1996]

§ 179.07 Notice given by "more expeditious means".

Each manufacturer who gives notice by more expeditious means as provided

for in 46 U.S.C. 4310(c)(1)(C), must give such notice in writing.

[CGD 93–055, 61 FR 13926, Mar. 28, 1996]

§ 179.09 Contents of notification.

Each notice required under 46 U.S.C. 4310(b) must include the following additional information:

(a) The name and address of the manufacturer.

(b) Identifying classifications including the make, model year, if appropriate, the inclusive dates (month and year) of the manufacture, or serial numbers and any other data necessary to describe the boats or associated equipment that may be affected.

[CGD 72–55R, 37 FR 15776, Aug. 4, 1972, as amended by CGD 93–055, 61 FR 13926, Mar. 28, 1996]

§ 179.11 Defects determined by the Commandant.

A manufacturer who is informed by the Commandant under 46 U.S.C. 4310(f) that a boat or associated equipment contains a defect relating to safety or failure to comply with a standard or regulation issued under the authority of 46 U.S.C. 4302, shall within 30 days of receipt of the information—

(a) Furnish the notification described in 46 U.S.C. 4310(d) to the persons designated in 46 U.S.C. 4310(c), or

(b) Provide information to the Commandant by certified mail stating why the manufacturer believes there is no defect relating to safety or failure of compliance.

[CGD 93–055, 61 FR 13926, Mar. 28, 1996]

§ 179.13 Initial report to the Commandant.

(a) When a manufacturer gives a notification required under 46 U.S.C. 4310, the manufacturer shall concurrently send to the Commandant by certified mail—

(1) A true or representative copy of each notice, bulletin, and other communication given to persons required to be notified under 46 U.S.C. 4310(c);

(2) The manufacturer's best estimate of the total number of boats or items of associated equipment potentially affected by the defect or failure to comply with a standard or regulation prescribed under 46 U.S.C. 4302; and

(3) If discovered or determined by the manufacturer, a chronology of all principal events upon which the determination is based.

(b) A manufacturer may submit an item required by paragraph (a) of this section that is not available at the time of submission to the Commandant when it becomes available if the manufacturer explains why it was not submitted within the time required and estimates when it will become available.

[CGD 72–55R, 37 FR 15776, Aug. 4, 1972, as amended by CGD 93–055, 61 FR 13926, Mar. 28, 1996]

§ 179.15 Follow-up report.

(a) Each manufacturer who makes an initial report required by § 179.13 shall submit a follow-up report to the Commandant by certified mail within 60 days after the initial report. The follow-up report must contain at least the following information:

(1) A positive identification of the initial report;

(2) The number of units in which the defect was discovered as of the date of the follow-up report;

(3) The number of units in which corrective action has been completed as of the date of the follow-up report;

(4) The number of first purchasers not notified because of an out-of-date name or address, or both; and

(5) An updating of the information required by § 179.13.

(b) Each manufacturer shall submit any additional follow-up reports requested by the Commandant.

§ 179.17 Penalties.

Each manufacturer who fails to comply with a provision of 46 U.S.C. 4310 or the regulations in this part, is subject to the penalties as prescribed in 46 U.S.C. 4311.

[CGD 93–055, 61 FR 13926, Mar. 28, 1996]

§ 179.19 Address of the Commandant.

(a) Each report and communication sent to the Coast Guard and required by this part concerning boats and associated equipment other than inflatable personal flotation devices, must be submitted to Commandant (CG–54223), 2100 2nd St., SW., Stop 7581, Washington, DC 20593–7581.

(b) Each report and communication sent to the Coast Guard and required by this part concerning inflatable personal flotation devices, must be submitted to Commandant (CG–5214), 2100 2nd St., SW., Stop 7126, Washington, DC 20593–7126.

[CGD 93–055, 61 FR 13927, Mar. 28, 1996; CGD 96–026, 61 FR 36629, July 12, 1996; USCG–2008–0179, 73 FR 35024, June 19, 2008; USCG–2010–0351, 75 FR 36287, June 25, 2010]

PART 181—MANUFACTURER REQUIREMENTS

Subpart A—General

Sec.
181.1 Purpose and applicability; preemptive effect.
181.3 Definitions.
181.4 Incorporation by reference.

Subpart B—Manufacturer Certification of Compliance

181.5 Purpose and applicability.
181.7 Compliance certification label required.
181.9 Affixing labels.
181.11 Exceptions to labeling requirement.
181.13 Removal of labels.
181.15 Contents of labels.
181.17 Label numbers and letters.
181.19 Construction of labels.

Subpart C—Identification of Boats

181.21 Purpose, applicability and effective dates.
181.23 Hull identification numbers required.
181.25 Hull identification number format.
181.27 Information displayed near hull identification number.
181.29 Hull identification number display.
181.31 Manufacturer identification code assignment.
181.33 Conditions for use of manufacturer identification codes.
181.35 Removal of numbers.

Subparts D–F [Reserved]

Subpart G—Instruction Pamphlet for Personal Flotation Devices

181.701 Applicability.
181.702 Information pamphlet: requirement to furnish.
181.703 Information pamphlet: Contents.
181.704 Contents of information pamphlet: Recreational hybrid PFD.
181.705 Contents of information pamphlet: Recreational inflatable PFD.

AUTHORITY: 46 U.S.C. 4302; Department of Homeland Security Delegation No. 0170.1 (92).

SOURCE: CGD 72–60, 37 FR 15779, Aug. 4, 1972, unless otherwise noted.

Subpart A—General

§ 181.1 Purpose and applicability; preemptive effect.

This part prescribes requirements for the certification of boats and associated equipment and identification of boats to which 46 U.S.C. chapter 43 applies. The regulations in this part have the preemptive effect described in 46 U.S.C. 4306.

[USCG–2003–14963, 77 FR 18703, Mar. 28, 2012]

§ 181.3 Definitions.

As used in this part:

Associated equipment means:

(1) Any system, part, or component of a boat as originally manufactured or any similar part or component manufactured or sold for replacement, repair, or improvement of such system, part, or component;

(2) Any accessory or equipment for, or appurtenance to, a boat; and

(3) Any marine safety article, accessory, or equipment intended for use by a person on board a boat; but

(4) Excluding radio equipment.

Boat means any vessel—

(1) Manufactured or used primarily for noncommercial use;

(2) Leased, rented, or chartered to another for the latter's noncommercial use; or

(3) Operated as an uninspected passenger vessel subject to the requirements of 46 CFR chapter I, subchapter C.

Date of certification means the date on which a boat or item of associated equipment is certified to comply with all applicable U.S. Coast Guard safety standards in effect on that date.

Date of manufacture means the month and year during which construction or assembly of a boat or item of associated equipment begins.

Manufacturer means any person engaged in—

(1) The manufacture, construction, or assembly of boats or associated equipment; or

(2) The importation of boats, associated equipment, or the components thereof, into the United States for sale.

Model year means the period beginning August 1 of any year and ending on July 31 of the following year. Each model year is designated by the year in which it ends.

Private label merchandiser means any person engaged in the business of selling and distributing, under his own trade name, boats, or items of associated equipment manufactured by another.

State means a State of the United States, Guam, the Commonwealth of Puerto Rico, the Virgin Islands, American Samoa, the District of Columbia, the Commonwealth of the Northern Mariana Islands, and any other territory or possession of the United States.

[CGD 96–026, 61 FR 33669, June 28, 1996; 61 FR 36786, July 12, 1996, as amended by USCG–1999;–5040, May 15, 2002; USCG–2003–14963, 77 FR 18703, Mar. 28, 2012]

§ 181.4 Incorporation by reference.

(a) Certain materials are incorporated by reference into this part with the approval of the Director of the Federal Register in accordance with 5 U.S.C. 552(a). To enforce any edition other than the one listed in paragraph (b) of this section, notice of change must be published in the FEDERAL REGISTER and the material made available to the public. All approved material is available for inspection at the Lifesaving and Fire Safety Standards Division (CG–5214), 2100 2nd St., SW., Stop 7126, Washington, DC 20593–7126, and at the National Archives and Records Administration (NARA). For information on the availability of this material at NARA, call 202–741–6030, or go to: *http://www.archives.gov/federal_register/code_of_federal_regulations/ibr_locations.html.* All approved material is available from the sources listed in paragraph (b) of this section.

(b) The materials approved for incorporation by reference in this part, and the sections affected are:

Underwriters Laboratories, Inc. (UL)

12 Laboratory Drive, Research Triangle Park, NC 27709–3995

UL 1123, Marine Buoyant Devices, 181.703.

February 17, 1995.

[CGD 81–023, 55 FR 32034, Aug. 6, 1990, as amended by CGD 93–055, 61 FR 13927, Mar. 28, 1996; CGD 96–026, 61 FR 33669, June 28, 1996; USCG–2000–7223, 65 FR 40059, June 29, 2000; 69 FR 18803, Apr. 9, 2004; USCG–2004–18057, 69 FR 34926, June 23, 2004; USCG–2010–0351, 75 FR 36287, June 25, 2010]

Subpart B—Manufacturer Certification of Compliance

§ 181.5 Purpose and applicability.

This subpart prescribes requirements for the certification of boats and associated equipment to which 46 U.S.C. Chapter 43 applies and to which a safety standard prescribed in Part 183 of this chapter applies.

[CGD 85–002, 51 FR 37573, Oct. 23, 1986]

§ 181.7 Compliance certification label required.

Unless there is affixed to it a certification label that contains the information required by § 181.15:

(a) No person who manufactures, constructs, or assembles a boat or associated equipment may deliver that boat or equipment for the purpose of sale;

(b) No person may import into the United States any boat or associated equipment; and

(c) No person engaged in the business of selling or distributing boats or associated equipment may sell or offer for sale any boat or associated equipment.

§ 181.9 Affixing labels.

(a) Each manufacturer of a boat or item of associated equipment to which a standard or regulation prescribed in Part 183 of this chapter applies shall affix a certification label that contains the information required by § 181.15 to that boat or equipment before it:

(1) Leaves the place of manufacture for the purpose of sale; or

(2) Is imported.

(b) The manufacturer of a boat or item of associated equipment that is sold to a private label merchandiser may, at the option of the private label merchandiser, affix a certification label identifying the private label merchandiser as the manufacturer before the boat or item of associated equipment leaves the place of manufacture.

§ 181.11 Exceptions to labeling requirement.

(a) This part does not apply to boats or associated equipment intended solely for export, and so labeled, tagged, or marked on the boat or equipment and on the outside of the container, if any, which is exported.

(b) If an item of associated equipment is so small that a certification label that meets the requirements in § 181.15 cannot be affixed to it, a certification label that contains the information required by § 181.15 may be printed on the smallest container in which the item is packed or on a slip packed with the item.

(c) This subpart does not apply to any outboard motor or starting control to which § 183.710 of this chapter applies.

[CGD 72–60, 37 FR 15779, Aug. 4, 1972, as amended by CGD 79–137, 46 FR 3515, Jan. 15, 1981; 46 FR 9579, Jan. 29, 1981]

§ 181.13 Removal of labels.

No person may remove a label required by this part or remove or alter any information on a label required by this part, unless authorized by the Commandant.

§ 181.15 Contents of labels.

(a) Each label required by § 181.7 must contain:

(1) The name and address of the manufacturer or private label merchandiser who certifies that the boat or item of associated equipment complies with the standards prescribed in Part 183 of this subchapter; and

(2) Except as provided in paragraph (c) of this section, the words:

(i) ''This (insert 'Boat' or 'Equipment') Complies With U.S. Coast Guard Safety Standards In Effect On (insert date of certification as prescribed in paragraph (b) of this section)''; or

(ii) If the item being certified is a boat, the label may show the words, ''This Boat Complies With U.S. Coast Guard Safety Standards In Effect On The Date of Certification.''

(b) Date of certification must be no earlier than the date on which construction or assembly began and no later than the date on which the boat or item of associated equipment leaves the place of manufacture or assembly or import for the purposes of sale.

(c) [Reserved]

(d) Except as provided in paragraph (e) of this section, the manufacturer may, in addition to the information required by paragraphs (a) and (b) of this section, display on the certification label any or all of the following information:

(1) Model name or designation.

(2) Hull identification number (if a boat) or serial number (if an item of associated equipment).

(3) Model year.

(e) Display of the hull identification number on the certification label does not satisfy the display requirements of § 181.29.

(f) Each boat which displays a maximum horsepower capacity determined in accordance with § 183.53(b) must, in addition to the information required by paragraphs (a), (b) and (d) of this section, display on the certification label, the following statement in letters no less than one-quarter of an inch in height:

THIS BOAT IS INTENDED FOR RACING AND OTHER HIGH PERFORMANCE ACTIVITIES. THE SKILL REQUIRED MAY EXCEED THE ABILITIES OF SOME OPERATORS.

[CGD 72–60, 37 FR 15779, Aug. 4, 1972, as amended by CGD 83–012, 49 FR 39327, Oct. 5, 1984; CGD 85–002, 51 FR 37573, Oct. 23, 1986; USCG–1999–5832, 64 FR 34716, June 29, 1999]

§ 181.17 Label numbers and letters.

Letters and numbers on each label must:

(a) Be no less than one-eighth of an inch in height; and

(b) Contrast with the basic color of the label, except that the date of certification may be permanently stamped, engraved, or embossed on the label.

§ 181.19 Construction of labels.

(a) Each label must be made of material that can withstand exposure to water, oil, salt spray, direct sunlight, heat, cold, and wear expected in normal use of the boat or item of associated equipment without deterioration of legibility.

(b) Each label must be made of material that shows visible traces of the alteration or removal of information on the label.

Subpart C—Identification of Boats

SOURCE: CGD 79–013, 48 FR 40718, Sept. 9, 1983, unless otherwise noted.

§ 181.21 Purpose, applicability and effective dates.

This subpart prescribes the requirements for identification of boats to which section 46 U.S.C. 4301 applies.

[CGD 79–013, 48 FR 40718, Sept. 9, 1983, as amended by USCG–1998–3799, 63 FR 35534, June 30, 1998; USCG–1999–5832, 64 FR 34716, June 29, 1999]

§ 181.23 Hull identification numbers required.

(a) A manufacturer must identify each boat produced or imported with primary and secondary hull identification numbers permanently affixed in accordance with § 181.29 of this subpart.

(b) A person who manufactures or imports a boat for his or her own use and not for sale must obtain the required hull identification number in accordance with the requirements of the issuing authority listed in 33 CFR part 173, Appendix A for the boat's State of principal operation and permanently affix the HIN to the boat in accordance with § 181.29 of this subpart.

(c) No person may assign the same HIN to more than one boat.

[USCG–2003–14963, 77 FR 18703, Mar. 28, 2012]

§ 181.25 Hull identification number format.

Each of the hull identification numbers required by § 181.23 must consist of twelve characters, uninterrupted by slashes, hyphens, or spaces, as follows:

(a) The first three characters must be a manufacturer identification code assigned under § 181.31(a) or the importer designation assigned under § 181.31(b).

(b) Characters four through eight must be a serial number assigned by the manufacturer in letters of the English alphabet, or Arabic numerals, or both, except the letters I, O, and Q.

(c) Characters nine and ten must indicate the month and year of certification when a date of certification is required. In all other cases characters nine and ten must indicate the date of manufacture. The date indicated can be no earlier than the date construction or assembly began and no later than the date the boat leaves the place of manufacture or assembly or is imported into the United States for the purposes of sale. Character nine must be indicated using letters of the English alphabet. The first month of the year, January, must be designated by the letter ''A'', the second month, February, by the letter ''B'', and so on until the last month of the year, December. Character ten must be the last digit of the year of manufacture or certification and must be an Arabic numeral.

(d) Characters eleven and twelve must indicate the model year using Arabic numerals for the last two numbers of the model year such as ''82'' for 1982 and ''83'' for 1983.

§ 181.27 Information displayed near hull identification number.

With the exception of the characters ''US-'', which constitute the country of origin code for the United States, if information is displayed on the boat within 2 inches of the 12-character hull identification number (HIN), that information must be separated from the HIN by means of borders or must be on a separate label, so that it will not be interpreted as part of the hull identification number.

[USCG–2003–14272, 69 FR 33860, June 17, 2004]

§ 181.29 Hull identification number display.

Two identical hull identification numbers are required to be displayed on each boat hull.

(a) The primary hull identification number must be affixed—

(1) On boats with transoms, to the starboard outboard side of the transom within two inches of the top of the transom, gunwale, or hull/deck joint, whichever is lowest.

(2) On boats without transoms or on boats on which it would be impractical to use the transom, to the starboard outboard side of the hull, aft, within one foot of the stern and within two

inches of the top of the hull side, gunwale or hull/deck joint, whichever is lowest.

(3) On catamarans and pontoon boats which have readily replaceable hulls, to the aft crossbeam within one foot of the starboard hull attachment.

(4) If the hull identification number would not be visible, because of rails, fittings, or other accessories, the number must be affixed as near as possible to the location specified in paragraph (a) of this section.

(b) The duplicate hull identification number must be affixed in an unexposed location on the interior of the boat or beneath a fitting or item of hardware.

(c) Each hull identification number must be carved, burned, stamped, embossed, molded, bonded, or otherwise permanently affixed to the boat so that alteration, removal, or replacement would be obvious. If the number is on a separate plate, the plate must be fastened in such a manner that its removal would normally cause some scarring of or damage to the surrounding hull area. A hull identification number must not be attached to parts of the boat that are removable.

(d) The characters of each hull identification number must be no less than one-fourth of an inch high.

[CGD 79–013, 48 FR 40718, Sept. 19, 1983; 48 FR 53558, Nov. 28, 1983]

§ 181.31 Manufacturer identification code assignment.

(a) Each person required by § 181.23(a) of this part to affix hull identifications numbers must request a manufacturer identification code in writing from the Commandant (CG–54223), 2100 Second St. SW., Stop 7581, Washington, DC 20593–7581. The request must indicate the manufacturer's name and U.S. address along with the general types and lengths of boats that will be manufactured.

(b) For boats manufactured outside of the jurisdiction of the United States, a U.S. importer must obtain a manufacturer identification code as required by paragraph (a) of this section. The request must indicate the importer's name and U.S. address along with a list of the manufacturers, their addresses, and the general types and sizes of boats that will be imported. If a nation has a hull identification number system which has been accepted by the Coast Guard for the purpose of importing boats, it may be used by the importer instead of the one specified within this subpart. To request a list of those nations having such a numbering system, write to the Commandant (CG–54223), 2100 Second St. SW., Stop 7581, Washington, DC 20593–7581.

[USCG–2003–14963, 77 FR 18703, Mar. 28, 2012]

§ 181.33 Conditions for use of manufacturer identification codes.

(a) No manufacturer or importer may sell or transfer a manufacturer identification code or use a manufacturer identification code that has been assigned to another.

(b) A manufacturer or importer who changes the business name or address must advise the Recreational Boating Product Assurance Branch (CG–54223), 2100 2nd St., SW., Stop 7581, Washington, DC 20593–7581 of the change in writing.

[CGD 79–013, 48 FR 40718, Sept. 9, 1983, as amended by CGD 88–052, 53 FR 25122, July 1, 1988; CGD 96–026, 61 FR 33669, June 28, 1996; USCG–2008–0179, 73 FR 35024, June 19, 2008; USCG–2010–0351, 75 FR 36287, June 25, 2010]

§ 181.35 Removal of numbers.

No person may remove or alter a number required by this subpart unless authorized by the Commandant, U.S. Coast Guard.

Subparts D–F [Reserved]

Subpart G—Instruction Pamphlet for Personal Flotation Devices

SOURCE: CGD 75–008a, 43 FR 9767, Mar. 9, 1978, unless otherwise noted.

§ 181.701 Applicability.

This subpart applies to all personal flotation devices that are sold or offered for sale for use on recreational boats.

§ 181.702 Information pamphlet: requirement to furnish.

(a) Each manufacturer of a Type I, II, III, IV, or V personal flotation device (PFD) must furnish with each PFD

that is sold or offered for sale for use on a recreational boat, an information pamphlet meeting the requirements of § 181.703, § 181.704, or § 181.705 of this subpart, as appropriate.

(b) No person may sell or offer for sale for use on a recreational boat, a Type I, II, III, IV, or V PFD unless an information pamphlet required by this section is attached in such a way that it can be read prior to purchase.

[CGD 93–055, 61 FR 13927, Mar. 28, 1996]

§ 181.703 Information pamphlet: Contents.

Unless otherwise specified in this subpart, each information pamphlet must contain the information specified in sections 33, 34 and 35 of UL 1123.

[CGD 93–055, 61 FR 13927, Mar. 28, 1996]

§ 181.704 Contents of information pamphlet: Recreational hybrid PFD.

Each information pamphlet for a recreational hybrid PFD approved under 46 CFR 160.077 must contain the information specified in 46 CFR 160.077–27.

[CGD 93–055, 61 FR 13927, Mar. 28, 1996]

§ 181.705 Contents of information pamphlet: Recreational inflatable PFD.

Each information pamphlet for a recreational inflatable PFD approved under 46 CFR 160.076 must contain the information required by 46 CFR 160.076–35.

[CGD 93–055, 61 FR 13927, Mar. 28, 1996]

PART 183—BOATS AND ASSOCIATED EQUIPMENT

Subpart A—General

Sec.
183.1 Purpose and applicability.
183.3 Definitions.
183.5 Incorporation by reference.

Subpart B—Display of Capacity Information

183.21 Applicability.
183.23 Capacity marking required.
183.25 Display of markings.
183.27 Construction of markings.

Subpart C—Safe Loading

183.31 Applicability.
183.33 Maximum weight capacity: Inboard and inboard-outdrive boats.
183.35 Maximum weight capacity: Outboard boats.
183.37 Maximum weight capacity: Boats rated for manual propulsion and boats rated for outboard motors of 2 horsepower or less.
183.39 Persons capacity: Inboard and inboard-outdrive boats.
183.41 Persons capacity: Outboard boats.
183.43 Persons capacity: Boats rated for manual propulsion and boats rated for outboard motors of 2 horsepower or less.

Subpart D—Safe Powering

183.51 Applicability.
183.53 Horsepower capacity.

Subpart E [Reserved]

Subpart F—Flotation Requirements for Inboard Boats, Inboard/Outdrive Boats, and Airboats

183.101 Applicability.
183.105 Quantity of flotation required.
183.110 Definitions.
183.112 Flotation material and air chambers.
183.114 Test of flotation materials.

Subpart G—Flotation Requirements for Outboard Boats Rated for Engines of More Than 2 Horsepower

GENERAL

183.201 Applicability.
183.202 Flotation and certification requirements.
183.205 Passenger carrying area.
183.210 Reference areas.
183.215 Reference depth.
183.220 Preconditioning for tests.
183.222 Flotation material and air chambers.

TESTS

183.225 Flotation test for persons capacity.
183.230 Stability test.
183.235 Level flotation test without weights for persons capacity.

Subpart H—Flotation Requirements for Outboard Boats Rated for Engines of 2 Horsepower or Less

GENERAL

183.301 Applicability.
183.302 Flotation requirements.
183.305 Passenger carrying area.
183.310 Reference areas.
183.315 Reference depth.
183.320 Preconditioning for tests.
183.322 Flotation materials.

TESTS

183.325 Flotation test for persons capacity.
183.330 Stability test.
183.335 Level flotation test without weights for persons capacity.

TABLE 4 TO SUBPART H OF PART 183—WEIGHTS (POUNDS) OF OUTBOARD MOTOR AND RELATED EQUIPMENT FOR VARIOUS BOAT HORSEPOWER RATINGS
FIGURES TO SUBPART H OF PART 183

Subpart I—Electrical Systems

GENERAL

183.401 Purpose, applicability, and effective dates.
183.402 Definitions.
183.405 General.

MANUFACTURER REQUIREMENTS

183.410 Ignition protection.
183.415 Grounding.
183.420 Batteries.
183.425 Conductors: General.
183.430 Conductors in circuits of less than 50 volts.
183.435 Conductors in circuits of 50 volts or more.
183.440 Secondary circuits of ignition systems.
183.445 Conductors: Protection.
183.455 Overcurrent protection: General.
183.460 Overcurrent protection: Special applications.

Subpart J—Fuel Systems

GENERAL

183.501 Applicability.
183.505 Definitions.
183.507 General.

EQUIPMENT STANDARDS

183.510 Fuel tanks.
183.512 Fuel tanks: Prohibited materials.
183.514 Fuel tanks: Labels.
183.516 Cellular plastic used to encase fuel tanks.
183.518 Fuel tank openings.
183.520 Fuel tank vent systems.
183.524 Fuel pumps.
183.526 Carburetors.
183.528 Fuel stop valves.
183.530 Spud, pipe, and hose fitting configuration.
183.532 Clips, straps, and hose clamps.
183.534 Fuel filters and strainers.
183.536 Seals and gaskets in fuel filters and strainers.
183.538 Metallic fuel line materials.
183.540 Hoses: Standards and markings.
183.542 Fuel systems.

MANUFACTURER REQUIREMENTS

183.550 Fuel tanks: Installation.
183.552 Plastic encased fuel tanks: Installation.
183.554 Fittings, joints, and connections.
183.556 Plug and fittings.
183.558 Hoses and connections.
183.560 Hose clamps: Installation.
183.562 Metallic fuel lines.
183.564 Fuel tank fill system.
183.566 Fuel pumps: Placement.
183.568 Anti-siphon protection.
183.570 Fuel filters and strainers: Installation.
183.572 Grounding.

TESTS

183.580 Static pressure test for fuel tanks.
183.584 Shock test.
183.586 Pressure impulse test.
183.588 Slosh test.
183.590 Fire test.

Subpart K—Ventilation

183.601 Applicability.
183.605 Definitions.
183.607 Incorporation by reference.
183.610 Powered ventilation system.
183.620 Natural ventilation system.
183.630 Standards for natural ventilation.

Subpart L—Start-in-Gear Protection

183.701 Applicability.
183.705 Definitions.
183.710 Start-in-gear protection required.
183.715 Exception.

Subpart M—Navigation Lights

183.801 Applicability.
183.803 Definitions.
183.810 Navigation light certification requirements.

Subpart N [Reserved]

AUTHORITY: 46 U.S.C. 4302; Pub. L 103–206, 107 Stat. 2439; 49 CFR 1.46.

SOURCE: CGD 72–61R, 37 FR 15782, Aug. 4, 1972, unless otherwise noted.

Subpart A—General

§ 183.1 Purpose and applicability.

This part prescribes standards and regulations for boats and associated equipment to which 46 U.S.C. Chapter 43 applies and to which certification requirements in Part 181 of this subchapter apply.

[CGD 85–098, 52 FR 19728, May 27, 1987]

§ 183.3 Definitions.

Beam means the transverse distance between the outer sides of the boat excluding handles, and other similar fittings, attachments, and extensions.

Boat means any vessel—

(1) Manufactured or used primarily for noncommercial use;

(2) Leased, rented, or chartered to another for the latter's noncommercial use; or

(3) Operated as an uninspected passenger vessel subject to the requirements of 46 CFR chapter I, subchapter C.

Full transom means a transom with a maximum width which exceeds one-half the maximum beam of the boat.

Length means the straight line horizontal measurement of the overall length from the foremost part of the boat to the aftermost part of the boat, measured from end to end over the deck excluding sheer, and measured parallel to the centerline. Bow sprits, bumpkins, rudders, outboard motor brackets, handles, and other similar fittings, attachments, and extensions are not included in the measurement.

Monohull boat means a boat on which the line of intersection of the water surface and the boat at any operating draft forms a single closed curve. For example, a catamaran, trimaran, or a pontoon boat is not a monohull boat.

Motorwell means any arrangement of bulkheads or structures that prevents water from entering the passenger carrying area of the boat through any cutout area in the transom for mounting an outboard motor.

Motorwell height means the vertical distance from the lowest point of water ingress along the top of the motorwell to a line representing a longitudinal extension of the centerline of the boat's bottom surface, excluding keels. This distance is measured as a projection on the centerline plane of the boat. See Figure 183.3.

Permanent appurtenances means equipment that is mounted or fastened, so that it is not removable without the use of tools. Seats, inboard engines, windshields, helm stations, or hardtops are permanent appurtenances. Outboard motors, controls, batteries, and portable fuel tanks are not permanent appurtenances.

Remote steering means any mechanical assist device which is rigidly attached to the boat and used in steering the vessel, including but not limited to mechanical, hydraulic, or electrical control systems.

Sailboat means a boat designed or intended to use sails as the primary means of propulsion.

Sheer means the topmost line in a boat's side. The sheer intersects the vertical centerline plane of the boat at the forward end and intersects the transom (stern) at the aft end. For the purposes of this definition, the topmost line in a boat's side is the line defined by a series of points of contact with the boat structure, by straight lines at 45 degree angles to the horizontal and contained in a vertical plane normal to the outside edge of the boat as seen from above and which are brought into contact with the outside of the horizontal boat. A boat is horizontal when it is transversely level and when the lowest points at 40 percent and 75 percent of the boat's length behind the most forward point of the boat are level.

Transom means the surface at the stern of a boat projecting or facing aft. The upper boundary of the transom is the line defined by a series of points of contact, with the boat structure, by straight lines at 45 degree angles to the horizontal and contained in a vertical longitudinal plane and which are brought into contact with the stern of the horizontal boat. A boat is horizontal when it is transversely level and when the lowest points at 40 percent and 75 percent of the boat's length behind the most forward point of the boat are level.

Transom height means the vertical distance from the lowest point of water ingress along the top of the transom to a line representing a longitudinal extension of the centerline of the boat's bottom surface, excluding keels. This distance is measured as a projection on the centerline plane of the boat. See Figure 183.3.

Vessel includes every description of watercraft, other than a seaplane on the water, used or capable of being used as a means of transportation on the water.

FIGURE 183.3—TRANSOM AND MOTORWELL HEIGHT

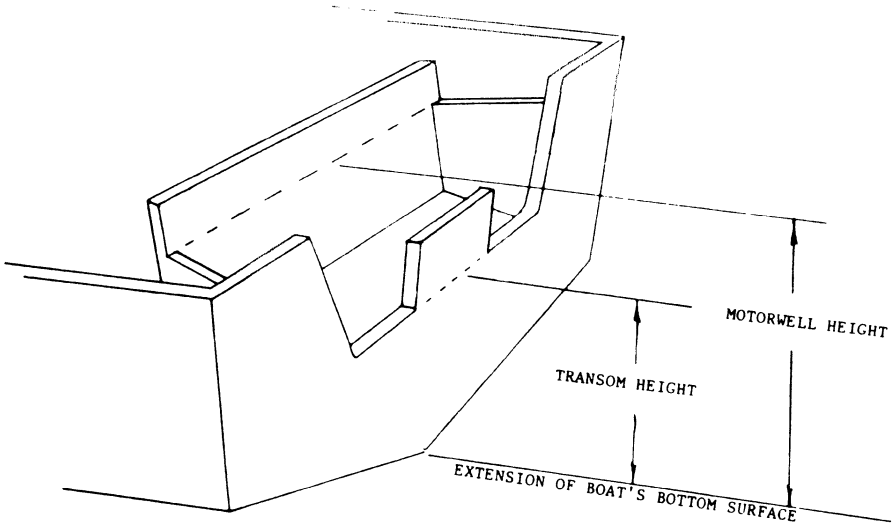

[CGD 73–250, 40 FR 43856, Sept. 23, 1975, as amended by CGD 75–176, 42 FR 2681, Jan. 13, 1977; CGD 85–002, 51 FR 37574, Oct. 23, 1986; CGD 96–026, 61 FR 33669, June 28, 1996; 61 FR 36629, July 12, 1996; USCG–1999–5040, 67 FR 34760, May 15, 2002]

§ 183.5 Incorporation by reference.

(a) Certain materials are incorporated by reference into this part with the approval of the Director of the Federal Register in accordance with 5 U.S.C. 552(a). To enforce any edition other than the one listed in paragraph (b) of this section, notice of change must be published in the FEDERAL REGISTER and the material made available to the public. All approved material is available for inspection at the Recreational Boating Product Assurance Branch (CG–54223), 2100 2nd St., SW., Stop 7581, Washington, DC 20593–7581, and at the National Archives and Records Administration (NARA). For information on the availability of this material at NARA, call 202–741–6030, or go to: *http://www.archives.gov/federal_register/code_of_federal_regulations/ibr_locations.html*. All approved material is available from the sources listed in paragraph (b) of this section.

(b) The materials approved for incorporation by reference in this part, and the sections affected are:

Air Movement and Control Association, 30 W. University Drive, Arlington Heights, IL 60004:	
AMCA 210–74: Laboratory Methods of Testing Fans for Ratings—1974.	§ 183.610
American Boat and Yacht Council, Inc., 3069 Solomons Island Road, Edgewater, Maryland 21037–1416:	
ABYC A–16 Electric Navigation Lights-1997.	§ 183.810
American Society for Testing and Materials, 100 Barr Harbor Drive, West Conshohocken, PA 19428–2959:	
ASTM D 471–96, Standard Test Method for Rubber Property—Effect of Liquids.	§§ 183.114; 183.516; 183.607; 183.620
ASTM D 1621–94, Standard Test Method for Compressive Properties of Rigid Cellular Plastics.	§ 183.516

ASTM D 1622–93, Standard Test Method for Apparent Density of Rigid Cellular Plastics. § 183.516

ASTM D 2842–97, Standard Test Method for Water Absorption of Rigid Cellular Plastics. § 183.114

Institute of Electrical and Electronics, Engineers, Inc., 445 Hoes Lane, Piscataway, NJ 08854:

IEEE 45 IEEE Recommended Practice for Electrical Installations on Shipboard—1983. Cable Construction. § 183.435

National Fire Protection Association, 1 Batterymarch Park, Quincy, MA 02269:

NFPA No. 70 National Electrical Code—1987. Articles 310 & 400. § 183.435

Naval Publications Forms Center, Customer Service—Code 1052, 5801 Tabor Avenue, Philadelphia, PA 19120:

MILSPEC-P-21929B Plastic Material, Cellular Polyurethane, Foam-In-Place, Rigid—1970. § 183.516

Society of Automotive Engineers, Inc., 400 Commonwealth Drive, Warrendale, PA 15096:

SAE J378 Marine Engine Wiring—1984. § 183.430

SAE J557 High Tension Ignition Cable—1968. § 183.440

SAE J1127 Battery Cable—1980. § 183.430

SAE J1128 Low Tension Primary Cable—1975. § 183.430

SAE J1527DEC85 Marine Fuel Hoses—1985. § 183.540

Underwriters Laboratories, Inc. (UL), 12 Laboratory Drive, Research Triangle Park, NC 27709–3995:

UL 1114 Marine (USCG Type A) Flexible Fuel Line Hose—1987. § 183.540

UL 1128 Marine Blowers—1977. § 183.610

UL 1426 Cables for Boats—1987. § 183.435

[CGD 87–009, 53 FR 36971, Sept. 23, 1988, as amended by CGD 96–026, 61 FR 33670, June 28, 1996; USCG–1999–5151, 64 FR 67176, Dec. 1, 1999; USCG–2000–7223, 65 FR 40059, June 29, 2000; USCG–1999–6580, 66 FR 55091, Nov. 1, 2001; 69 18803, Apr. 9, 2004; USCG–2004–18057, 69 FR 34926, June 23, 2004; USCG–2008–0179, 73 FR 35024, June 19, 2008; USCG–2010–0351, 75 FR 36288, June 25, 2010]

Subpart B—Display of Capacity Information

§ 183.21 Applicability.

This subpart applies to monohull boats less than 20 feet in length, except sailboats, canoes, kayaks, and inflatable boats.

§ 183.23 Capacity marking required.

Each boat must be marked in the manner prescribed in §§ 183.25 and 183.27 with the maximum persons capacity in whole numbers of persons and in pounds, the maximum weight capacity in pounds, determined under §§ 183.33 through 183.43, and the maximum horsepower capacity determined under § 183.53 or the statement ''This Boat Not Rated for Propulsion by a Motor''.

[CGD 78–034, 45 FR 2029, Jan. 10, 1980, as amended by USCG–1999–5832, 64 FR 34716, June 29, 1999]

§ 183.25 Display of markings.

(a) Each marking required by § 183.23 must be permanently displayed in a legible manner where it is clearly visible to the operator when getting the boat underway.

(b) The information required by § 183.23 must be displayed in the following manner:

(1) For outboard boats:

U.S. Coast Guard Maximum Capacities

XX Persons or XXX Pounds
XXX Pounds, persons, motor, gear
XXX Horsepower, motor

or

U.S. Coast Guard Maximum Capacities

XX Persons or XXX Pounds
XXX Pounds, persons, motor, gear
XXX Horsepower, motor with remote steering
XXX Horsepower, motor without remote steering

(2) For inboard boats and inboard-outboard boats:

U.S. Coast Guard Maximum Capacities

XX Persons or XXX Pounds
XXX Pounds, persons, gear

(3) For boats rated for motors of 2 horsepower or less:

U.S. Coast Guard Maximum Capacities

XX Persons or XXX Pounds
XXX Pounds, persons, motor, gear
XXX Horsepower, motor

(4) For boats rated for manual propulsion:

U.S. Coast Guard Maximum Capacities

XX Persons or XXX Pounds
XXX Pounds, persons, gear

This Boat Not Rated for Propulsion by Motor

(c) The capacity information displays required in paragraph (b) must meet the following as illustrated in Figure 183.25:

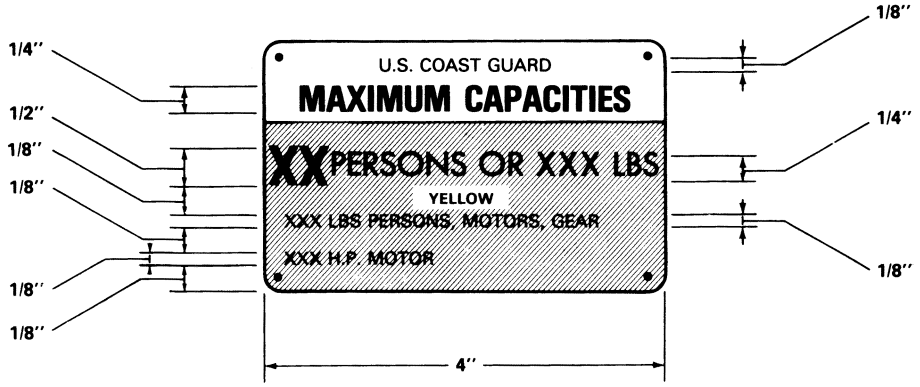

All Dimensions Are Minimum

FIGURE 183.25

(1) The capacity information required in §183.23 must be displayed within a yellow area that—

(i) Is at least 4 inches wide; and

(ii) Is high enough that each line of print is separated by at least ⅛ inch from each other and from the borders of the yellow area;

(2) The persons capacity in whole numbers must be black print with the following dimensions:

(i) The height must not be smaller than one-half inch;

(ii) The width of the numbers must be three-fifths of the height except for the number ''4'', which shall be one stroke width wider, and the number ''1'', which shall be one stroke in width;

(iii) The stroke width shall be one-sixth of the height; and

(iv) The minimum space between the numbers shall be one stroke width.

(3) The words in the line ''XX Persons or XXX Pounds'' must be at least one-quarter inch in height but not larger than one-half the height of the persons capacity number and of a color contrasting with yellow. The number of pounds in this line must be at least one-eighth inch in height but no larger than one-half the height of the persons capacity number and of a color contrasting with yellow.

(4) All remaining words and numbers required to be within the yellow area required in paragraph (c)(1) must be at least one-eighth inch in height, but no larger than one-half the height of the persons capacity number.

(5) All other words and numbers on the displays must be located outside

the yellow area on a background color which contrasts with yellow.

(6) The words ''Maximum Capacities'' must be at least one-quarter inch in height and of color contrasting with its background.

(7) The words ''U.S. Coast Guard'' must be at least one-eighth inch in height and of color contrasting with its background.

[CGD 78–034, 45 FR 2029, Jan. 10, 1980]

§ 183.27 Construction of markings.

Each marking required by § 183.23 must be—

(a) Capable of withstanding the combined effects of exposure to water, oil, salt spray, direct sunlight, heat, cold, and wear expected in normal operation of the boat, without loss of legibility; and

(b) Resistant to efforts to remove or alter the information without leaving some obvious sign of such efforts.

[CGD 78–034, 45 FR 2030, Jan. 10, 1980]

Subpart C—Safe Loading

§ 183.31 Applicability.

This subpart applies to monohull boats less than 20 feet in length except sailboats, canoes, kayaks, and inflatable boats.

§ 183.33 Maximum weight capacity: Inboard and inboard-outdrive boats.

(a) The maximum weight capacity (W) marked on a boat that has one or more inboard or inboard-outdrive units for propulsion must not exceed the greater value of W obtained from either of the following formulas:

$$W = \frac{(\text{maximum displacement})}{5} - \frac{\text{boat weight}}{5} - \frac{4\,(\text{machinery weight})}{5}$$

or

$$W = \frac{(\text{maximum displacement} - \text{boat weight})}{7}$$

(b) For the purposes of paragraph (a) of this section:

(1) ''Maximum displacement'' is the weight of the volume of water displaced by the boat at its maximum level immersion in calm water without water coming aboard. For the purpose of this paragraph, a boat is level when it is transversely level and when either of the two following conditions are met:

(i) The forward point where the sheer intersects the vertical centerline plane and the aft point where the sheer intersects the upper boundary of the transom (stern) are equidistant above the water surface or are equidistant below the water surface.

(ii) The most forward point of the boat is level with or above the lowest point of water ingress.

(2) ''Boat weight'' is the combination of:

(i) Hull weight;

(ii) Deck and superstructure weight;

(iii) Weight of permanent appurtenances; and

(iv) Weight of full permanent fuel tanks.

(3) ''Machinery weight'' is the combined weight of installed engines or motors, control equipment, drive units, and batteries.

[CGD 72–61R, 37 FR 15782, Aug. 4, 1972]

EDITORIAL NOTE: For FEDERAL REGISTER citations affecting § 183.33, see the List of CFR Sections Affected, which appears in the Finding Aids section of the printed volume and at *www.fdsys.gov*.

§ 183.35 Maximum weight capacity: Outboard boats.

(a) The maximum weight capacity marked on a boat that is designed or intended to use one or more outboard motors for propulsion must be a number that does not exceed one-fifth of the difference between its maximum displacement and boat weight.

(b) For the purposes of paragraph (a) of this section:

(1) ''Maximum displacement'' is the weight of the volume of water displaced by the boat at its maximum level immersion in calm water without water coming aboard except for water coming through one opening in the motor well with its greatest dimension not over 3 inches for outboard motor controls or fuel lines. For the purpose of this paragraph, a boat is level when it is transversely level and when either of the two following conditions are met:

(i) The forward point where the sheer intersects the vertical centerline plane and the aft point where the sheer intersects the upper boundary of the transom (stern) are equidistant above the water surface or are equidistant below the water surface.

(ii) The most forward point of the boat is level with or above the lowest point of water ingress.

(2) ''Boat weight'' is the combination of:

(i) Hull weight;

(ii) Deck and superstructure weight;

(iii) Weight of permanent appurtenances; and

(iv) Weight of full permanent fuel tanks.

[CGD 72–61, 37 FR 15782, Aug. 4, 1972, as amended by CGD 73–250, 40 FR 43857, Sept. 23, 1975; CGD 75–176, 42 FR 2681, Jan. 13, 1977; USCG–1999–5832, 64 FR 34716, June 29, 1999]

§ 183.37 Maximum weight capacity: Boats rated for manual propulsion and boats rated for outboard motors of 2 horsepower or less.

(a) The maximum weight capacity marked on a boat that is rated for manual propulsion or for motors of 2 horsepower or less must not exceed 3/10 of the difference between the boat's maximum displacement and the boat's weight in pounds.

(b) For the purposes of paragraph (a) of this section:

(1) ''Maximum displacement'' is the weight of the volume of water displaced by the boat at its maximum level immersion in calm water without water coming aboard. For the purpose of this paragraph, a boat is level when it is transversely level and when either of the two following conditions are met:

(i) The forward point where the sheer intersects the vertical centerline plane and the aft point where the sheer intersects the upper boundary of the transom (stern) are equidistant above the water surface or are equidistant below the water surface.

(ii) The most forward point of the boat is level with or above the lowest point of water ingress.

(2) ''Boat weight'' is the combination of:

(i) Hull weight;

(ii) Deck and superstructure weight; and

(iii) Weight of permanent appurtenances.

[CGD 72–61R, 37 FR 15782, Aug. 4, 1972]

EDITORIAL NOTE: For FEDERAL REGISTER citations affecting § 183.37, see the List of CFR Sections Affected, which appears in the Finding Aids section of the printed volume and at *www.fdsys.gov*.

§ 183.39 Persons capacity: Inboard and inboard-outdrive boats.

(a) The persons capacity in pounds marked on a boat that is designed to use one or more inboard engines or inboard-outdrive units for propulsion must not exceed the lesser of:

(1) The maximum weight capacity determined under § 183.33 for the boat; or

(2) For boats with a maximum persons capacity less than 550 pounds, the maximum persons capacity determined in the following manner:

(i) Float the boat in calm water with all its permanent appurtenances, including installed engines, full fuel system and tanks, control equipment, drive units and batteries.

(ii) Gradually add weights along one outboard extremity of each passenger carrying area, at the height of the seat nearest the center of that area, but no higher than the height of the gunwale and distributed equally forward and aft of that center in a plane parallel to the floorboards, until the boat assumes the maximum list or trim or both, without water coming aboard.

(iii) Compute the persons capacity in pounds in the following formula: Persons capacity=A/0.6 where A is the total of the weights added in paragraph (a)(2)(ii) of this section.

(b) The maximum persons capacity in whole numbers of persons marked on a boat that is designed or intended to use one or more inboard engines or inboard-outboard units must not exceed the value obtained by adding 32 pounds to the value determined in paragraph (a)(2)(iii), dividing the sum by 141 and rounding off the result to the nearest whole number. If the fraction is less than one-half, round down to the next whole integer and if the fraction is equal to or greater than one-half, round up to the next higher whole integer.

[CGD 78–034, 45 FR 2030, Jan. 10, 1980, as amended by CGD 83–012, 49 FR 39328, Oct. 5, 1984; 50 FR 18636, May 2, 1985]

§ 183.41 Persons capacity: Outboard boats.

(a) The persons capacity in pounds marked on a boat that is designed to use one or more outboard motors for propulsion must not exceed the lesser of:

(1) The maximum weight capacity determined under § 183.35 for the boat minus the motor and control weight, battery weight (dry), and full portable fuel tank weight from table 4 of subpart H of this part; or

(2) For boats with a maximum persons capacity less than 550 pounds, the maximum persons capacity determined in the following manner:

(i) Float the boat with all its permanent appurtenances.

(ii) Add, in normal operating positions, the dry motor and control weight, battery weight, and full portable fuel tank weight, if any, shown in table 4 of subpart H of this part for the maximum horsepower capacity marked on the boat. Permanently installed fuel tanks shall be full of fuel.

(iii) Gradually add weights along one outboard extremity of each passenger carrying area, at the height of the seat nearest the center of that area, but no higher than the height of the gunwale, and distributed equally forward and aft of that center in a plane parallel to the floorboards until the boat assumes the maximum list or trim, or both without water coming aboard.

(iv) Compute the persons capacity in pounds using the following formula: Persons capacity=A/0.6 where A is the total of the weights added in paragraph (a)(2)(iii) of this section.

(b) The maximum persons capacity in whole numbers of persons marked on a boat designed or intended to use one or more outboard motors for propulsion must not exceed the value obtained by adding 32 pounds to the lesser of the values determined in paragraph (a)(1) or (a)(2)(iv), dividing the sum by 141, and rounding off the result to the nearest whole number. If the fraction is less than one-half, round down to the next lower whole integer and if the fraction is equal to or greater than one-half, round up to the next higher whole integer.

[CGD 78–034, 45 FR 2030, Jan. 10, 1980, as amended by CGD 83–012, 49 FR 39328, Oct. 5, 1984; 50 FR 18636, May 2, 1985]

§ 183.43 Persons capacity: Boats rated for manual propulsion and boats rated for outboard motors of 2 horsepower or less.

(a) The persons capacity in pounds marked on a boat that is rated for manual propulsion or for motors of 2 horsepower or less must not exceed:

(1) For boats rated for manual propulsion, 90 percent of the maximum weight capacity in pounds; and

(2) For boats rated for motors of 2 horsepower or less, 90 percent of the maximum weight capacity in pounds, less 25 pounds.

(b) The maximum persons capacity, in whole numbers of persons marked on a boat that is rated for manual propulsion must not exceed the value obtained by adding 32 pounds to the value determined in paragraph (a)(1), dividing the sum by 141, and rounding off the result to the nearest whole number. If the fraction is less than one-half, round down to the next lower integer and if the fraction is equal to or greater than one-half, round up to the next higher whole integer.

(c) The maximum persons capacity in whole numbers of persons marked on a boat rated for motors of 2 horsepower or less must not exceed the value obtained by adding 32 pounds to the value determined in paragraph (a)(2), dividing the sum by 141, and rounding off the result to the nearest whole number. If the fraction is less than one-half, round down to the next lower

whole integer and if the fraction is equal to or greater than one-half, round up to the next higher whole integer.

[CGD 78–034, 45 FR 2031, Jan. 10, 1980]

Subpart D—Safe Powering

§ 183.51 Applicability.

This subpart applies to monohull boats less than 20 feet in length, except sailboats, canoes, kayaks, and inflatable boats, that are designed or intended to use one or more outboard motors for propulsion.

§ 183.53 Horsepower capacity.

The maximum horsepower capacity marked on a boat must not exceed the horsepower capacity determined by the computation method discussed in paragraph (a) of this section, or for certain qualifying boats, the performance test method discussed in paragraph (b) of this section.

(a) The maximum horsepower capacity must be computed as follows:

(1) Compute a factor by multiplying the boat length in feet by the maximum transom width in feet excluding handles and other similar fittings, attachments, and extensions. If the boat does not have a full transom, the transom width is the broadest beam in the aftermost quarter length of the boat.

(2) Locate horsepower capacity corresponding to the factor in Table 183.53.

(3) For a boat with a factor over 52.5, if the horsepower capacity calculated in Table 183.53 is not an exact multiple of 5, it may be raised to the next exact multiple of 5.

(4) For flat bottom hard chine boats with a factor of 52 or less, the horsepower capacity must be reduced by one horsepower capacity increment in Table 183.53.

TABLE 183.53—OUTBOARD BOAT HORSEPOWER CAPACITY

[Compute: Factor=Boat Length×Transom Width]

If factor (nearest integer) is	0–35	36–39	40–42	43–45	46–52
Horsepower Capacity is	3	5	7.5	10	15

[Note: For flat bottom hard chine boats, with factor of 52 or less, reduce one capacity limit (e.g. 5 to 3)]

If factor is over 52.5 and the boat has	Remote steering and at least 20″ transom height	No remote steering, or less than 20″ transom height	
		For flat bottom hard chine boats	For other boats
Horsepower capacity is (raise to nearest multiple of 5).	(2×Factor) − 90	(0.5×Factor) − 15	(0.8×Factor) − 25

(b) For boats qualifying under this paragraph, the performance test method described in this paragraph may be used to determine the horsepower capacity.

(1) *Qualifying criteria.* (i) Thirteen feet or less in length;

(ii) Remote wheel steering;

(iii) Transom height

(A) Minimum 19 inch transom height; or,

(B) For boats with at least a 19 inch motorwell height, a minimum 15 inch transom height;

(iv) Maximum persons capacity not over two persons;

(2) *Boat preparation.* (i) The boat must be rigged with equipment recommended or provided by the boat and motor manufacturer and tested with the highest horsepower production powerplant for which the boat is to be rated, not to exceed 40 horsepower.

(ii) Standard equipment must be installed in accordance with manufacturers' instructions.

(iii) The lowest ratio (quickest) steering system offered on the boat model being tested must be installed.

(iv) The outboard motor must be fitted with the manufacturer's recommended propeller providing maximum speed.

(v) Standard permanently installed fuel tanks must be no more than one-half full. Boats without permanent tanks must be tested with one full portable tank.

(vi) Portable tanks must be in their designated location or placed as far aft as possible.

(vii) The outboard motor must be placed in the lowest vertical position on the transom or, if mounting instructions are provided with the boat, at the height recommended.

(viii) Boat bottom, motor and propeller must be in new or almost new condition.

NOTE: The use of the following special equipment should be considered because of the potential for exceeding the capabilities of the boat while performing the test:
Racing Type Personal Flotation Device
Helmet.

(3) *Test conditions*. Testing must be conducted on smooth, calm water with the wind speed below 10 knots. The test must be conducted with no load other than a driver who must weigh no more than 200 pounds. The motor trim angle must be adjusted to provide maximum full throttle speed short of excessive porpoising or propeller ventilation or ''cavitation'', so that there is no loss of directional control.

(4) *Quick turn test procedure*. Set throttle at a low maneuvering speed and steer the boat straight ahead. Turn the steering wheel 180° in the direction of least resistance in ½ second or less and hold it at that position without changing the throttle or trim settings during or after the wheel change. The boat completes the maneuver successfully if it is capable of completing a 90° turn without the driver losing control of the boat or reducing the throttle setting. Gradually increase the boat's turn entry speed incrementally until the boat does not complete the Quick Turn Test successfully or successfully completes it at maximum throttle.

NOTE: It is recognized that operator skill and familiarity with a particular boat and motor combination will affect the test results. It is permissible to make a number of practice runs through the quick turn test at any throttle setting.

(5) *Test course method*. Set throttle for 30 miles per hour boat speed and run the test course set up in accordance with Figure 183.53, passing outside the designated avoidance marker for 35 to 37.5 miles per hour without contacting any of the course markers. If the boat successfully completes this run of the test course, increase the throttle setting to 35 to 37.5 miles per hour boat speed and run the course passing outside the designated avoidance marker for that speed without contacting any of the course markers. If the boat successfully completes this run of the test course and the motor was not at full throttle, increase the throttle setting to 37.5 to 42.5 miles per hour boat speed and run the course passing outside the designated avoidance marker for that speed without contacting any of the course markers. If the boat successfully completes this run of the test course and the motor was not at full throttle, increase the throttle setting to 42.5 miles per hour or more and run the course passing outside the designated avoidance marker for that speed without contacting any of the course markers. If the boat successfully completes this run of the test course and the motor was not at full throttle, continue to increase the throttle setting and run the test course passing outside the designated avoidance marker for 42.5 miles per hour or more until the boat fails to complete the test successfully or the boat completes the test course maneuvers successfully at full throttle. The boat successfully completes the test course if the driver is able to maneuver it between the designated avoidance markers without striking the markers and without losing control of the boat or reducing the throttle setting. There must be no change in position of any equipment on board and there must be no change of position of personnel in order to influence the test results. There must be no instability evidenced by oscillating motion in the roll or yaw axes exhibited while negotiating the course.

NOTE: It is recognized that operator skill and familiarity with a particular boat and motor combination will affect the test results. It is therefore considered permissible to make a number of practice runs through the test course at any throttle setting.

(6) *Maximum horsepower capacity*. (i) For boats capable of less than 35 miles per hour, the maximum horsepower capacity must be the maximum horsepower with which the boat was able to successfully complete the Quick Turn Test Procedure in §183.53(b)(4) at full

throttle or the maximum horsepower determined under the calculations in § 183.53(a) of this section.

(ii) For boats capable of 35 miles per hour or more, the maximum horsepower capacity must be the maximum horsepower with which the boat was able to successfully complete both the Quick Turn Test Procedure in § 183.53(b)(4) and the Test Course Method in § 183.53(b)(5) at full throttle or the calculations in § 183.53(a) of this section.

(iii) The maximum horsepower capacity determined in accordance with § 183.53(b) must not exceed 40 horsepower.

FIGURE 183.53—BOAT HORSEPOWER CAPACITY TEST COURSE—35 MPH OR MORE

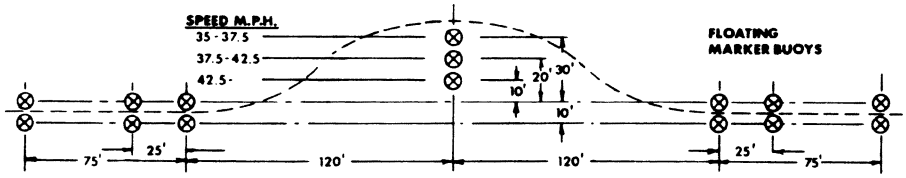

[CGD 85–002, 51 FR 37574, Oct. 23, 1986]

Subpart E [Reserved]

Subpart F—Flotation Requirements for Inboard Boats, Inboard/Outdrive Boats, and Airboats

SOURCE: CGD 75–168, 42 FR 20243, Apr. 18, 1977, unless otherwise noted.

§ 183.101 Applicability.

This subpart applies to monohull inboard boats, inboard/outdrive boats, and airboats less than 20 feet in length, except sailboats, canoes, kayaks, inflatable boats, submersibles, surface effect vessels, amphibious vessels, and raceboats.

[CGD 75–168, 42 FR 20243, Apr. 18, 1977, as amended by USCG–1999–5832, 64 FR 34716, June 29, 1999]

§ 183.105 Quantity of flotation required.

(a) Each boat must have enough flotation to keep any portion of the boat above the surface of the water when the boat has been submerged in calm, fresh water for at least 18 hours and loaded with:

(1) A weight that, when submerged, equals two-fifteenths of the persons capacity marked on the boat;

(2) A weight that, when submerged, equals 25 percent of the dead weight; and

(3) A weight in pounds that, when submerged, equals 62.4 times the volume in cubic feet of the two largest air chambers, if air chambers are used for flotation.

(b) For the purpose of this section, ''dead weight'' means the maximum weight capacity marked on the boat minus the persons capacity marked on the boat.

§ 183.110 Definitions.

For the purpose of this subpart:

Bilge means the area in the boat, below a height of 4 inches measured from the lowest point in the boat where liquid can collect when the boat is in its static floating position, except engine rooms.

Connected means allowing a flow of water in excess of one-quarter ounce per hour from the engine room bilge into any other compartment with a 12 inch head of water on the engine room side of the bulkhead.

Engine room bilge means the area in the engine room or a connected compartment below a height of 12 inches measured from the lowest point where

liquid can collect in these compartments when the boat is in its static floating position.

Engine room means the compartment where a permanently installed gasoline or diesel engine is installed, including connected compartments.

Open to atmosphere means a compartment that has at least 15 square inches of open area directly exposed to the atmosphere for each cubic foot of net compartment volume.

Sealed compartment means an enclosure that can resist an exterior water level of 12 inches without seepage of more than one-quarter fluid ounce per hour.

[CGD 77–145, 43 FR 56858, Dec. 4, 1978, as amended by CGD 82–010, 48 FR 8273, Feb. 28, 1983; CGD 85–098, 52 FR 19728, May 27, 1987; CGD 96–026, 61 FR 33670, June 28, 1996; USCG–1999–5832, 64 FR 34716, June 29, 1999; USCG–1999–5151, 64 FR 67176, Dec. 1, 1999]

§ 183.112 Flotation material and air chambers.

(a) Flotation materials must meet the requirements in § 183.114 as listed in Table 183.114 when used in the: (1) Engine room bilge, (2) engine room, or (3) bilge, unless located in a sealed compartment.

(b) Air chambers used to meet the flotation requirements of this subpart must not be integral with the hull.

[CGD 77–145, 43 FR 56859, Dec. 4, 1978; 44 FR 47934, Aug. 16, 1979]

§ 183.114 Test of flotation materials.

(a) *Vapor test*. The flotation material must not reduce in buoyant force more than 5 percent after being immersed in a fully saturated gasoline vapor atmosphere for 30 days at a minimum temperature of 38 °C.

(b) *24-hour gasoline test*. The flotation material must not reduce in buoyant force more than 5 percent after being immersed for 24 hours at 23 plus or minus 2 °C in reference fuel B, of ASTM D 471 (incorporated by reference, see § 183.5).

(c) *30-day gasoline test*. The flotation material must not reduce in buoyant force more than 5 percent after being immersed for 30 days at 23 plus or minus 2 °C in reference fuel B, of ASTM D 471 (incorporated by reference, see § 183.5).

(d) *24-hour oil test*. The flotation material must not reduce in buoyant force more than 5 percent after being immersed for 24 hours at 23 plus or minus 2 °C in reference oil No. 2, of ASTM D 471 (incorporated by reference, see § 183.5).

(e) *30-day oil test*. The flotation material must not reduce in buoyant force more than 5 percent after being immersed for 30 days at 23 plus or minus 2 °C in reference oil No. 2, of ASTM D 471 (incorporated by reference, see § 183.5).

(f) *24-hour bilge cleaner test*. The flotation material must not reduce in buoyant force more than 5 percent after being immersed for 24 hours at 23 plus or minus 2 °C in a 5-percent solution of trisodium phosphate in water.

(g) *30-day bilge cleaner test*. The flotation material must not reduce in buoyant force more than 5 percent after being immersed for 30 days at 23 plus or minus 2 °C in a 5-percent solution of trisodium phosphate in water.

(h) The buoyant force reduction in paragraphs (a) through (g) of this section is measured in accordance with ASTM D 2842 (incorporated by reference, see § 183.5).

TABLE 183.114—FLOTATION PERFORMANCE TESTS

Test 183.114	Area 183.110		
	(b) Engine room bilge	(c) Engine room unless open to atmosphere	(d) Bilge
(a) Vapor test	.....	X	.....
(b) 24 hour gasoline test	.....	.....	X
(c) 30 day gasoline test	X	.....	.....
(d) 24 hour oil test	.....	.....	X
(e) 30 day oil test	X	.....	.....
(f) 24 hour bilge cleaner test	.....	.....	X
(g) 30 day bilge cleaner test	X	.....	.....

[CGD 77–145, 43 FR 56859, Dec. 4, 1978; 44 FR 47934, Aug. 16, 1979, as amended by USCG–2000–7223, 65 FR 40059, June 29, 2000]

Subpart G—Flotation Requirements for Outboard Boats Rated for Engines of More Than 2 Horsepower

SOURCE: CGD 75–168, 42 FR 20243, Apr. 18, 1977, unless otherwise noted.

GENERAL

§ 183.201 Applicability.

(a) This subpart applies to monohull outboard boats that are:

(1) Less than 20 feet in length; and

(2) Rated for outboard engines of more than 2 horsepower.

(b) This subpart does not apply to sailboats, canoes, kayaks, inflatable boats, submersibles, surface effect vessels, amphibious vessels, and raceboats.

[CGD 75–168, 42 FR 20243, Apr. 18, 1977, as amended by USCG–1999–5832, 64 FR 34716, June 29, 1999]

§ 183.202 Flotation and certification requirements.

Each boat to which this subpart applies must be manufactured, constructed, or assembled to pass the stability and flotation tests prescribed in §§ 183.225(a), 183.230(a), and 183.235(a).

§ 183.205 Passenger carrying area.

(a) For the purpose of this section a boat is level when it is supported on its keel at the two points shown in Figure 2.

(b) As used in this subpart, the term ''passenger carrying area'' means each area in a boat in which persons can sit in a normal sitting position or stand while the boat is in operation. Passenger carrying areas are illustrated in Figures 3 through 8.

(c) The length of the passenger carrying area is the distance along the centerline of the boat between two vertical lines, one at the forward end and one at the aft end of the passenger carrying area when the boat is level as illustrated in Figures 3 and 4. For boats with a curved stem inside the passenger carrying area, the forward vertical line is where a line 45 degrees to the horizontal when the boat is level is tangent to the curve of the stem, as illustrated in Figure 5. For boats with cabins, the forward vertical line is where there is a minimum distance of two feet between the inside top of the cabin and the water line formed when the boat is swamped and loaded with weights under § 183.220 as illustrated in Figure 6.

(d) The breadth of each passenger carrying area is the distance between two vertical lines at the mid-length, excluding consoles, of the passenger carrying area when the boat is level as illustrated in Figures 7 and 8. For boats with round chines inside the passenger carrying area, the vertical line is where a transverse line 45 degrees to the horizontal is tangent to the arc of the chine, as illustrated in Figure 8.

[CGD 75–168, 42 FR 20243, Apr. 18, 1977, as amended by USCG–1999–5832, 64 FR 34716, June 29, 1999]

§ 183.210 Reference areas.

(a) The forward reference area of a boat is the forward most 2 feet of the top surface of the hull or deck, as illustrated in Figure 9.

(b) The aft reference area of a boat is the aft most two feet of the top surface of the hull or deck, as illustrated in Figure 9.

§ 183.215 Reference depth.

Reference depth is the minimum distance between the uppermost surface of the submerged reference area of a boat and the surface of the water measured at the centerline of the boat, as illustrated in Figure 10. If there is no deck surface at the centerline of the boat from which a measurement can be made, the reference depth is the average of two depth measurements made on opposite sides of, and at an equal distance from, the centerline of the boat.

§ 183.220 Preconditioning for tests.

A boat must meet the following conditions for at least 18 hours before the tests required by §§ 183.225, 183,230, and 183.235:

(a) Manufacturer supplied permanent appurtenances such as windshields and convertible tops must be installed on the boat.

(b) The boat must be loaded with a quantity of weight that, when submerged, is equal to the sum of the following:

(1) The sum of 50 percent of the first 550 pounds of the persons capacity marked on the boat and 12½ percent of the remainder of the persons capacity.

(2) Twenty-five percent of the result of the following calculation, but not less than zero: The maximum weight capacity marked on the boat; less the weight shown in Column 6 of Table 4

for maximum horsepower marked on the boat; less the persons capacity marked on the boat.

(c) The weights required by paragraph (b) of this section must be placed in the boat so that the center of gravity of each amount of weight required by paragraphs (b)(1) and (b)(2) of this section is within the shaded area illustrated in Figure 11. The location and dimensions of the shaded area are as follows:

(1) The shaded area is centered at the mid-length of the passenger carrying area and at the mid-breadth of the boat;

(2) The length of the shaded area, measured along the centerline of the boat, is equal to 40 percent of the length of the passenger carrying area of the boat; and

(3) The breadth of the shaded area, measured at the midlength of the passenger carrying area, is equal to 40 percent of the breadth of the passenger carrying area of the boat.

(d) Weight must be placed in the normal operating position of the motor and controls and the battery in lieu of this equipment. The required quantity of weight used for this purpose depends upon the maximum rated horsepower of the boat being tested and is specified in Columns 2 and 4 of Table 4 for the swamped weight of the motor and controls and for the submerged weight or the battery, respectively.

(e) Permanent fuel tanks must be filled with fuel and each external opening into the fuel tank must be sealed.

(f) The boat must be keel down in the water.

(g) The boat must be swamped, allowing water to flow between the inside and outside of the boat, either over the sides, through a hull opening, or both. Entrapped air in the flooded portion of the boat must be eliminated.

(h) Water must flood the two largest air chambers and all air chambers integral with the hull.

[CGD 75–168, 42 FR 20243, Apr. 18, 1977, as amended by USCG–1999–5832, 64 FR 34716, June 29, 1999]

§ 183.222 Flotation material and air chambers.

(a) Flotation materials must meet the requirements in § 183.114 as listed in Table 183.114 when used in the bilge, unless located in a sealed compartment.

(b) Air chambers used to meet the flotation requirements of this subpart must not be integral with the hull.

[CGD 77–145, 43 FR 56859, Dec. 4, 1978; 44 FR 47934, Aug. 16, 1979]

TESTS

§ 183.225 Flotation test for persons capacity.

Flotation standard. When the conditions prescribed in § 183.220 are met, the boat must float in fresh, calm water as follows:

(a) The angle of heel does not exceed 10 degrees from the horizontal.

(b) Any point on either the forward or aft reference area is above the surface of the water.

(c) The reference depth at the reference area that is opposite the reference area that is above the surface of the water is 6 inches or less.

§ 183.230 Stability test.

(a) *Flotation standard.* When the conditions prescribed in § 183.220 (a), (d) through (h) and paragraphs (b) and (c) of this section are met, the boat must float in fresh, calm water as follows:

(1) The angle of heel does not exceed 30 degrees from the horizontal.

(2) Any point on either the forward or aft reference area is above the surface of the water.

(3) The reference depth at the reference area that is opposite the reference area that is above the surface of the water is 12 inches or less.

(b) *Quantity of weight used.* Load the boat with a quantity of weight that, when submerged, is equal to the sum of the following:

(1) One-half of the quantity of weight required by § 183.220(b)(1).

(2) The quantity of weight required by § 183.220(b)(2).

(c) *Placement of quantity of weight: starboard side.* Place the weight required by paragraph (b) of this section in the boat so that:

(1) The quantity of weight required by § 183.220(b)(2) is positioned in accordance with § 183.220(c); and

(2) One-half the quantity of weight required by § 183.220(b)(1) is uniformly

distributed over a distance along the outboard perimeter of the starboard side of the passenger carrying area that is equal to at least 30 percent of the length of the passenger carrying area so that the center of gravity of the quantity of weight is located within the shaded area illustrated in Figure 12, the center of gravity of the amount of weight placed on the floor of the boat is at least 4 inches above the floor, and the center of gravity of the amount of weight placed on a seat is at least 4 inches above the seat. The location and dimensions of the shaded area are as follows:

(i) The shaded area is centered at the mid-length of the passenger carrying area;

(ii) The length of the shaded area is equal to 70 percent of the length of the passenger carrying area; and

(iii) The breadth of the shaded area is 6 inches from:

(A) For weights placed on the floor, the outboard perimeter of the passenger carrying area; and

(B) For weights placed on a seat, a vertical line inside the passenger carrying area as illustrated in Figure 13.

(d) *Placement of quantity of weight: port side*. The quantity of weight required by paragraph (b)(1) of this section is placed along the port side of the passenger carrying area in accordance with the conditions prescribed in paragraph (c)(2) of this section.

§ 183.235 Level flotation test without weights for persons capacity.

When the conditions prescribed in § 183.220 (a) and (d) through (h) are met, the boat must float in fresh, calm water as follows:

(a) The angle of heel does not exceed 10 degrees from the horizontal.

(b) Any point on either the forward or aft reference area is above the surface of the water.

(c) The reference depth at the reference area that is opposite the reference area that is above the surface of the water is 6 inches or less.

[CGD 77–145, 43 FR 56859, Dec. 4, 1978, as amended by USCG–1999–5832, 64 FR 34716, June 29, 1999]

Subpart H—Flotation Requirements for Outboard Boats Rated for Engines of 2 Horsepower or Less

SOURCE: CGD 75–168, 42 FR 20245, Apr. 18, 1977, unless otherwise noted.

GENERAL

§ 183.301 Applicability.

(a) This subpart applies to monohull outboard boats that are:

(1) Less than 20 feet in length; and

(2) Rated for manual propulsion or outboard engines of 2 horsepower or less.

(b) This subpart does not apply to sailboats, canoes, kayaks, inflatable boats, submersibles, surface effect vessels, amphibious vessels, and raceboats.

[CGD 75–168, 42 FR 20245, Apr. 18, 1977, as amended by USCG–1999–5832, 64 FR 34716, June 29, 1999]

§ 183.302 Flotation requirements.

Each boat to which this subpart applies must be manufactured, constructed, or assembled to pass the stability and flotation tests prescribed in §§ 183.325(a), 183.330(a), and 183.335(a).

§ 183.305 Passenger carrying area.

(a) For the purpose of this section, a boat is level when it is supported on its keel at the two points shown in Figure 2.

(b) As used in this subpart, the term ''passenger carrying area'' means each area in a boat in which persons can sit in a normal sitting position or stand while the boat is in operation. Passenger carrying areas are illustrated in Figures 3 through 8.

(c) The length of each passenger carrying area is the distance along the centerline of the boat between two vertical lines, one at the forward end and one at the aft end of the passenger carrying area, when the boat is level, as illustrated in Figures 3 and 4. For boats with a curved stem inside the passenger carrying area, the forward vertical line is where a line 45 degrees to the horizontal when the boat is level is tangent to the curve of the stem, as illustrated in Figure 5. For boats with cabins, the forward vertical line is

where there is a minimum distance of two feet between the inside top of the cabin and the water line formed when the boat is swamped and loaded with weights under § 183.320 as illustrated in Figure 6.

(d) The breadth of the passenger carrying area is the distance beteen two vertical lines at the mid-length, excluding consoles, of the passenger carrying area when the boat is level as illustrated in Figures 7 and 8. For boats with round chines inside the passenger carrying area, the vertical line is where a transverse line 45 degrees to the horizontal is tangent to the arc of the chine, as illustrated in Figure 7.

[CGD 75–168, 42 FR 20245, Apr. 18, 1977; 42 FR 24738, May 16, 1977]

§ 183.310 Reference areas.

(a) The forward reference area of a boat is the forwardmost 2 feet of the top surface of the hull or deck as illustrated in Figure 9.

(b) The aft reference area of a boat is the aftmost two feet of the top surface of the hull or deck, as illustrated in Figure 9.

§ 183.315 Reference depth.

Reference depth is the minimum distance between the uppermost surface of the submerged reference area of a boat and the surface of the water measured at the centerline of the boat, as illustrated in Figure 10. If there is no deck surface at the centerline of the boat from which a measurement can be made, the reference depth is the average of two depth measurements made on opposite sides of, and at an equal distance from, the centerline of the boat.

§ 183.320 Preconditioning for tests.

A boat must meet the following conditions for at least 18 hours before the tests required by §§ 183.325, 183.330, and 183.335:

(a) Manufacturer supplied permanent appurtenances such as windshields, and convertible tops must be installed on the boat.

(b) The boat must be loaded with a quantity of weight that, when submerged, is equal to the sum of the following:

(1) Two-fifteenths of the persons capacity marked on the boat.

(2) Twenty-five percent of the result of the following calculation, but not less than zero: the maximum weight capacity marked on the boat; less the weight shown in column 6 of Table 4 for the maximum horsepower marked on the boat; less the persons capacity marked on the boat.

(c) The weights required by paragraph (b) of this section are placed in the boat so that the center of gravity of each amount of weight required by paragraphs (b)(1) and (b)(2) of this section is within the shaded area illustrated in Figure 11. The location and dimensions of the shaded area are as follows:

(1) The shaded area is centered at the mid-length of the passenger carrying area and at the mid-breadth of the boat;

(2) The length of the shaded area, measured along the centerline of the boat, is equal to 40 percent of the length of the passenger carrying area of the boat; and

(3) The breadth of the shaded area, measured at the mid-length of the passenger carrying area, is equal to 40 percent of the breadth of the passenger carrying area of the boat.

(d) Weight must be placed in the normal operating position of the motor and controls in lieu of this equipment. The quantity of weight used for this purpose depends upon the maximum rated horsepower of the boat being tested and is specified in Column 2 of Table 4 for the swamped weight of the motor and controls.

(e) Permanent fuel tanks must be filled with fuel and each external opening into the fuel tank must be sealed.

(f) The boat must be keel down in the water.

(g) The boat must be swamped, allowing water to flow between the inside and the outside of the boat, either over the sides, through a hull opening, or both. Entrapped air in the flooded portion of the boat must be eliminated.

§ 183.322 Flotation materials.

(a) Flotation materials must meet the requirements in § 183.114 as listed in Table 183.114 when used in the bilge,

unless located in a sealed compartment.

[CGD 77–145, 43 FR 56859, Dec. 4, 1978; 44 FR 47934, Aug. 16, 1979]

TESTS

§ 183.325 Flotation test for persons capacity.

Flotation standard. When the conditions prescribed in § 183.320 are met, the boat must float in fresh, calm water as follows:

(a) The angle of heel does not exceed 10 degrees from the horizontal.

(b) Any point on either the forward or aft reference area is above the surface of the water.

(c) The reference depth at the reference area that is opposite the reference area that is above the surface of the water is 6 inches or less.

§ 183.330 Stability test.

(a) *Flotation standard*. When the conditions prescribed in § 183.320 (a), (d) through (g) and paragraphs (b) and (c) of this section are met, the boat must float in fresh, calm water as follows:

(1) The angle of heel does not exceed 30 degrees from the horizontal.

(2) Any point on either the forward or aft reference area is above the surface of the water.

(3) The reference depth at the reference area that is opposite the reference area that is above the surface of the water is 12 inches or less.

(b) *Quantity of weight used*. Load the boat with quantity of weight that, when submerged, is equal to the sum of the following:

(1) One-half the quantity of weight required by § 183.320(b)(1).

(2) The quantity of weight required by § 183.320(b)(2).

(c) *Placement of quantity of weight: starboard side*. Place the quantity of weight required by paragraph (b) of this section in the boat so that:

(1) The quantity of weight required by § 183.320(b)(2) is positioned in accordance with § 183.320(c); and

(2) One-half the quantity of weight required by § 183.320(b)(1) is uniformly distributed over a distance along the outboard perimeter of the starboard side of the passenger carrying area that is equal to at least 30 percent of the length of the passenger carrying area so that the center of gravity of the quantity of weight is located within the shaded area illustrated in Figure 12, the center of gravity of the amount of weight placed on the floor of the boat is at least 4 inches above the floor and the center of gravity of the amount of weight placed on a seat is at least 4 inches above the seat. The location and dimensions of the shaded area are as follows:

(i) The shaded area is centered at the mid-length of the passenger carrying area;

(ii) The length of the shaded area is equal to 70 percent of the length of the passenger carrying area; and

(iii) The breadth of the shaded area is 6 inches from:

(*a*) For weights placed on the floor, the outboard perimeter of the passenger carrying area; and

(*b*) For weights placed on a seat, a vertical line inside the passenger carrying area as illustrated in Figure 13.

(d) *Placement of quantity of weight: port side*. The quantity of weight required by paragraph (b)(1) of this section is placed along the port side of the passenger carrying area in accordance with the conditions prescribed in paragraph (c)(2) of this section.

§ 183.335 Level flotation test without weights for persons capacity.

When the conditions prescribed in § 183.320 (a) and (d) through (g) are met, the boat must float in fresh, calm water as follows:

(a) The angle of heel does not exceed 10 degrees from the horizontal.

(b) Any point on either the forward or aft reference area is above the surface of the water.

(c) The reference depth at the reference area that is opposite the reference area that is above the surface of the water is 6 inches or less.

[CGD 75–168, 42 FR 20245, Apr. 18, 1977, as amended by USCG–1999–5832, 64 FR 34716, June 29, 1999]

TABLE 4 TO SUBPART H OF PART 183—WEIGHTS (POUNDS) OF OUTBOARD MOTOR AND RELATED EQUIPMENT FOR VARIOUS BOAT HORSEPOWER RATINGS

Boat horsepower rating	Motor and control weight		Battery weight		Full portable fuel tank weight	1+3+5
	Dry	Swamped	Dry	Submerged		
	Column No.					
	1	2	3	4	5	6
0.1 to 2	25	20	.....	.....	.....	25
2.1 to 3.9	40	34	.....	.....	.....	40
4.0 to 7	60	52	.....	.....	25	35
7.1 to 15	90	82	20	11	50	160
15.1 to 25	125	105	45	25	50	220
25.1 to 45	170	143	45	25	100	315
45.1 to 60	235	195	45	25	100	380
60.1 to 80	280	235	45	25	100	425
80.1 to 145	405	352	45	25	100	550
145.1 to 275	430	380	45	25	100	575
275.1 and up	605	538	45	25	100	750
TRANSOMS DESIGNED FOR TWIN MOTORS						
50.1 to 90	340	286	90	50	100	530
90.1 to 120	470	390	90	50	100	660
120.1 to 160	560	470	90	50	100	750
160.1 to 290	810	704	90	50	100	1000
290.1 to 550	860	760	90	50	100	1050
550.1 and up	1210	1076	90	50	100	1400

[CGD 83–012, 49 FR 39328, Oct. 5, 1984]

FIGURES TO SUBPART H OF PART 183

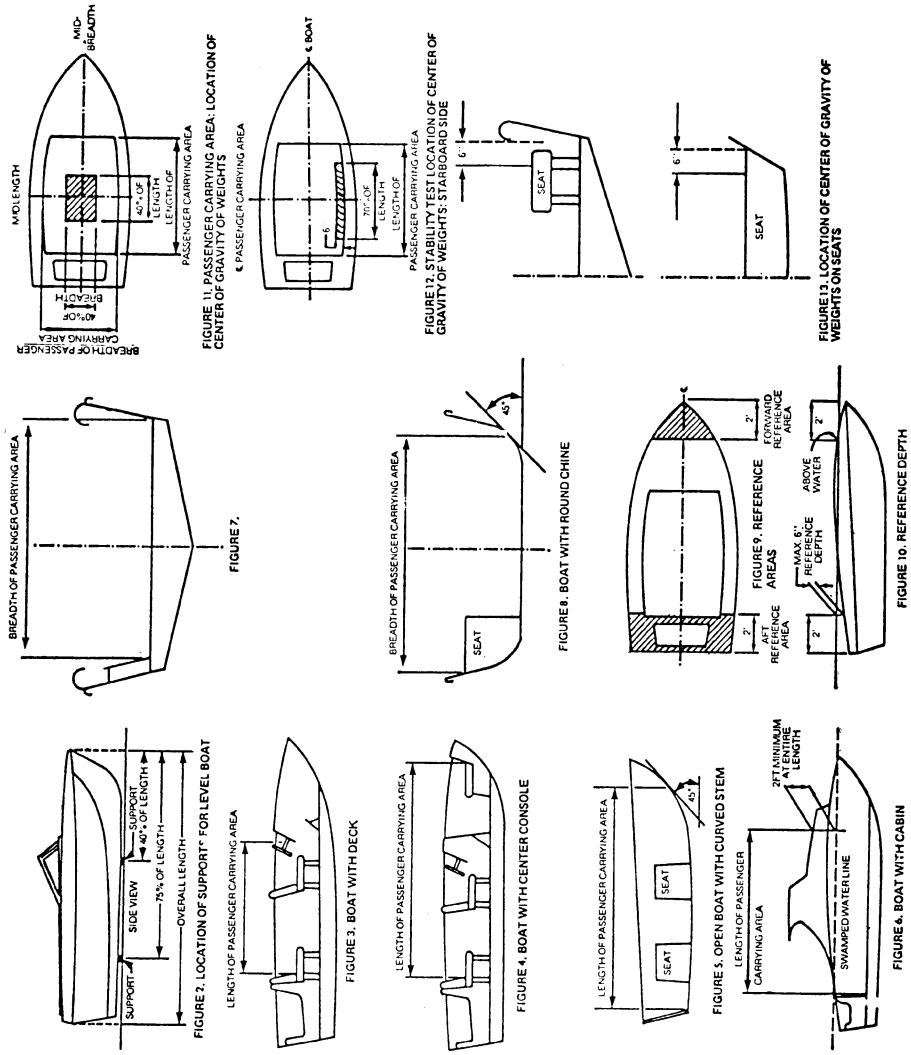

Subpart I—Electrical Systems

SOURCE: CGD 73–217, 42 FR 5944, Jan. 31, 1977, unless otherwise noted.

GENERAL

§ 183.401 Purpose, applicability, and effective dates.

(a) This subpart applies to all boats that have gasoline engines, except outboard engines, for electrical generation, mechanical power, or propulsion.

(b) [Reserved]

[CGD 73–217, 42 FR 5944, Jan. 31, 1977, as amended by CGD 81–092, 48 FR 55736, Dec. 15, 1983; USCG–1999–5832, 64 FR 34716, June 29, 1999]

§ 183.402 Definitions.

As used in this subpart—

AWG means American Wire Gauge.

Electrical component means electrical equipment such as, but not limited to, conductors, solenoids, motors, generators, alternators, distributors, resistors, appliances and electrical control devices.

Pigtails means external power conductors or wires that are part of electrical components and appliances, such as bilge pumps, blowers, lamps, switches, solenoids, and fuses.

Sheath means a material used as a continuous protective covering, such as electrical tape, molded rubber, molded plastic, or flexible tubing, around one or more insulated conductors.

[CGD 73–217, 42 FR 5944, Jan. 31, 1977, as amended by CGD 85–098, 52 FR 19728, May 27, 1987; CGD 96–026, 61 FR 33670, June 28, 1996]

§ 183.405 General.

Each electrical component on a boat to which this subpart applies must meet the requirements of this subpart unless the component is part of an outboard engine or part of portable equipment.

MANUFACTURER REQUIREMENTS

§ 183.410 Ignition protection.

(a) Each electrical component must not ignite a propane gas and air mixture that is 4.25 to 5.25 percent propane gas by volume surrounding the electrical component when it is operated at each of its manufacturer rated voltages and current loadings, unless it is isolated from gasoline fuel sources, such as engines, and valves, connections, or other fittings in vent lines, fill lines, distribution lines or on fuel tanks, in accordance with paragraph (b) of this section.

(b) An electrical component is isolated from a gasoline fuel source if:

(1) A bulkhead that meets the requirements of paragraph (c) of this section is between the electrical component and the gasoline fuel source;

(2) The electrical component is:

(i) Lower than the gasoline fuel source and a means is provided to prevent fuel and fuel vapors that may leak from the gasoline fuel source from becoming exposed to the electrical component; or

(ii) Higher than the gasoline fuel source and a deck or other enclosure is between it and the gasoline fuel source; or

(3) The space between the electrical component and the gasoline fuel source is at least two feet and the space is open to the atmosphere.

(c) Each bulkhead required by paragraph (b)(1) of this section must:

(1) Separate the electrical component from the gasoline fuel source and extend both vertically and horizontally the distance of the open space between the fuel source and the ignition source;

(2) Resist a water level that is 12 inches high or one-third of the maximum height of the bulkhead, whichever is less, without seepage of more than one-quarter fluid ounce of fresh water per hour; and

(3) Have no opening located higher than 12 inches or one-third the maximum height of the bulkhead, whichever is less, unless the opening is used for the passage of conductors, piping, ventilation ducts, mechanical equipment, and similar items, or doors, hatches, and access panels, and the maximum annular space around each item or door, hatch or access panel must not be more than one-quarter inch.

§ 183.415 Grounding.

If a boat has more than one gasoline engine, grounded cranking motor circuits must be connected to each other by a common conductor circuit that can carry the starting current of each of the grounded cranking motor circuits.

§ 183.420 Batteries.

(a) Each installed battery must not move more than one inch in any direction when a pulling force of 90 pounds or twice the battery weight, whichever is less, is applied through the center of gravity of the battery as follows:

(1) Vertically for a duration of one minute.

(2) Horizontally and parallel to the boat's center line for a duration of one minute fore and one minute aft.

(3) Horizontally and perpendicular to the boat's center line for a duration of one minute to starboard and one minute to port.

(b) Each battery must be installed so that metallic objects cannot come in contact with the ungrounded battery terminals.

(c) Each metallic fuel line and fuel system component within 12 inches and above the horizontal plane of the battery top surface as installed must be shielded with dielectric material.

(d) Each battery must not be directly above or below a fuel tank, fuel filter, or fitting in a fuel line.

(e) A vent system or other means must be provided to permit the discharge from the boat of hydrogen gas released by the battery.

(f) [Reserved]

(g) Each battery terminal connector must not depend on spring tension for its mechanical connection to the terminal.

[CGD 73–217, 42 FR 5944, Jan. 31, 1977, as amended by CGD 81–092, 48 FR 55736, Dec. 15, 1983]

§ 183.425 Conductors: General.

(a) Each conductor must be insulated, stranded copper.

(b) Except for intermittent surges each conductor must not carry a current greater than that specified in Table 5 for the conductor's gauge and temperature rating.

(c) For conductors in engine spaces, amperages must be corrected by the appropriate correction factor in note 1 of Table 5.

(d) Each conductor in a multiconductor sheath must be at least a No. 18 AWG conductor.

(e) Each conductor installed separately must be at least a No. 16 AWG conductor.

(f) Each No. 18 AWG conductor in a multiconductor sheath may not extend out of the sheath more than 30 inches.

(g) This section does not apply to communications systems; electronic navigation equipment; electronic circuits having a current flow of less than one ampere; conductors which are totally inside an equipment housing; resistance conductors that control circuit amperage; high voltage secondary conductors and terminations that are in ignition systems; pigtails of less than seven inches of exposed length and cranking motor conductors.

TABLE 5—ALLOWABLE AMPERAGE OF CONDUCTORS

Conductor size (AWG)	Temperature rating of conductor insulation						
	60 °C (140 °F)	75 °C (167 °F)	80 °C (176 °F)	90 °C (194 °F)	105 °C (221 °F)	125 °C (257 °F)	200 °C (392 °F)
18	10	10	15	20	20	25	25
16	15	15	20	25	25	30	35
14	20	20	25	30	35	40	45
12	25	25	35	40	45	50	55
10	40	40	50	55	60	70	70
8	55	65	70	70	80	90	100
6	80	95	100	100	120	125	135
4	105	125	130	135	160	170	180
3	120	145	150	155	180	195	210
2	140	170	175	180	210	225	240
1	165	195	210	210	245	265	280
0	195	230	245	245	285	305	325
00	225	265	285	285	330	355	370
000	260	310	330	330	385	410	430
0000	300	360	385	385	445	475	510

NOTES

1. See the following table:	60 °C (140 °F)	75 °C (167 °F)	80 °C (176 °F)	90 °C (194 °F)	105 °C (221 °F)	125 °C (257 °F)	200 °C (392 °F)
Temperature rating of conductor	0.58	0.75	0.78	0.82	0.85	0.89	1.00
2. See the following table:	*Correction factor*						
Number of current carrying conductors:							
3	0.70						

TABLE 5—ALLOWABLE AMPERAGE OF CONDUCTORS—Continued

Conductor size (AWG)	Temperature rating of conductor insulation						
	60 °C (140 °F)	75 °C (167 °F)	80 °C (176 °F)	90 °C (194 °F)	105 °C (221 °F)	125 °C (257 °F)	200 °C (392 °F)
4 to 6	.60						
7 to 24	.50						
25 and above	.40						

[CGD 73–217, 42 FR 5944, Jan. 31, 1977; 42 FR 24739, May 16, 1977, as amended by CGD 81–092, 48 FR 55736, Dec. 15, 1983]

§ 183.430 Conductors in circuits of less than 50 volts.

(a) Each conductor in a circuit that has a nominal voltage of less than 50 volts must:

(1) Meet the requirements of § 183.435; or

(2) Meet:

(i) The insulating material temperature rating requirements of SAE Standard J378; and

(ii) SAE Standard J1127, or SAE Standard 1128.

(b) This section does not apply to communication systems; electronic navigation equipment; resistance conductors that control circuit amperage; and pigtails of less than seven inches of exposed length.

[CGD 73–217, 42 FR 5944, Jan. 31, 1977, as amended by CGD 87–009, 53 FR 36971, Sept. 23, 1988]

§ 183.435 Conductors in circuits of 50 volts or more.

(a) Each conductor in a circuit that has a nominal voltage of 50 volts or more must be:

(1) A conductor that has insulation listed and classified moisture resistant and flame retardant in Article 310, NFPA No. 70, National Electric Code;

(2) A flexible cord type SO, STO, ST, SJO, SJT, or SJTO listed in Article 400, NFPA No. 70, National Electric Code;

(3) A conductor that meets IEEE Standard 45.

(4) A conductor that meets UL Standard 1426.

(b) Where the nominal circuit voltage of each of three or more current carrying conductors in a duct, bundle, or cable is 50 volts or more, the amperages of each of those conductors must not exceed the value in table 5 multiplied by the correction factor in note 2 to Table 5 for the number of conductors that carry 50 volts or more.

(c) This section does not apply to communication systems; electronic navigation equipment; resistance conductors that control circuit amperage; conductors in secondary circuits of ignition systems; and pigtails of less than seven inches of exposed length.

[CGD 73–217, 42 FR 5944, Jan. 31, 1977; 42 FR 24739, May 16, 1977, as amended by CGD 80–047 and CGD 80–046, 45 FR 85450, Dec. 29, 1980; CGD 87–009, 53 FR 36972, Sept. 23, 1988]

§ 183.440 Secondary circuits of ignition systems.

(a) Each conductor in a secondary circuit of an ignition system must meet SAE Standard J557.

(b) The connection of each ignition conductor to a spark plug, coil, or distributor must have a tight fitting cap, boot, or nipple.

[CGD 73–217, 42 FR 5944, Jan. 31, 1977, as amended by USCG–1999–5832, 64 FR 34716, June 29, 1999]

§ 183.445 Conductors: Protection.

(a) Each conductor or group of conductors that passes through a bulkhead, structural member, junction box, or other rigid surface must be protected from abrasion.

(b) Each ungrounded terminal or stud that is continuously energized must meet § 183.455 or must have a boot, nipple, cap, cover, or shield that prevents accidental short-circuiting at the terminals or studs.

[CGD 81–092, 48 FR 55736, Dec. 15, 1983]

§ 183.455 Overcurrent protection: General.

(a) Each ungrounded current-carrying conductor must be protected by a

manually reset, tripfree circuit breaker or fuse.

(b) A manually reset, trip-free circuit breaker or fuse must be placed at the source of power for each circuit or conductor except:

(1) If it is physically impractical to place the circuit breaker or fuse at the source of power, it may be placed within seven inches of the source of power for each circuit or conductor measured along the conductor.

(2) If it is physically impractical to place the circuit breaker or fuse at or within seven inches of the source of power, it may be placed within 40 inches of the source of power for each circuit or conductor, measured along the conductor, if the conductor is contained throughout its entire distance between the source of power and the required circuit breaker or fuse in a sheath or enclosure such as a junction box, control box, or enclosed panel.

(c) The current rating of each circuit breaker or fuse must not exceed:

(1) For circuits of less than 50 volts, 150% of the value of the amperage in Table 5 for the conductor size it is protecting; and

(2) For circuits of 50 volts or more, the value of the amperage in Table 5 for the conductor size it is protecting. If this value does not correspond to a standard size or rated circuit breaker or fuse the next larger size or rated circuit breaker or fuse may be used if it does not exceed 150% of the allowed current capacity of the conductor.

(d) The voltage rating of each circuit breaker or fuse must not be less than the nominal circuit voltage of the circuit it is protecting.

(e) This section does not apply to resistance conductors that control circuit amperage; conductors in secondary circuits of ignition systems; pigtails of less than seven inches of exposed length; and power supply conductors in cranking motor circuits.

[CGD 73–217, 42 FR 5944, Jan. 31, 1977, as amended by CGD 78–090, 44 FR 68466, Nov. 29, 1979]

§ 183.460 Overcurrent protection: Special applications.

(a) Each ungrounded output conductor from a storage battery must have a manually reset, trip-free circuit breaker or fuse, unless the output conductor is in the main power feed circuit from the battery to an engine cranking motor. The circuit breaker or fuse must be within 72 inches of the battery measured along the conductor, unless, for boats built prior to August 1, 1985, the circuit has a switch that disconnects the battery.

(b) Each ungrounded output conductor from an alternator or generator, except for self-limiting alternators or generators, must have a circuit breaker or fuse that has a current rating that does not exceed 120 percent of the maximum rated current of the alternator or generator at 60 °C.

[CGD 73–217, 42 FR 5944, Jan. 31, 1977, as amended by CGD 81–092, 48 FR 55736, Dec. 15, 1983]

Subpart J—Fuel Systems

SOURCE: CGD 74–209, 42 FR 5950, Jan. 31, 1977, unless otherwise noted.

GENERAL

§ 183.501 Applicability.

(a) This subpart applies to all boats that have gasoline engines, except outboard engines, for electrical generation, mechanical power, or propulsion.

(b) [Reserved]

[CGD 74–209, 42 FR 5950, Jan. 31, 1977, as amended by CGD 81–092, 48 FR 55736, Dec. 15, 1983; USCG–1999–5832, 64 FR 34716, June 29, 1999]

§ 183.505 Definitions.

As used in this subpart:

Flame arrestor means a device or assembly that prevents passage of flame through a fuel vent.

Fuel system means the entire assembly of the fuel fill, vent, tank, and distribution components, including pumps, valves, strainers, carburetors, and filters.

Static floating position means the attitude in which a boat floats in calm water, with each fuel tank filled to its rated capacity, but with no person or item of portable equipment on board.

[CGD 74–209, 42 FR 5950, Jan. 31, 1977, as amended by CGD 85–098, 52 FR 19728, May 27, 1987]

§ 183.507 General.

Each fuel system component on a boat to which this subpart applies must meet the requirements of this subpart unless the component is part of an outboard engine or is part of portable equipment.

EQUIPMENT STANDARDS

§ 183.510 Fuel tanks.

(a) Each fuel tank in a boat must have been tested by its manufacturer under § 183.580 and not leak when subjected to the pressure marked on the tank label under § 183.514(b)(5).

(b) Each fuel tank must not leak if subjected to the fire test under § 183.590. Leakage is determined by the static pressure test under § 183.580, except that the test pressure must be at least one-fourth PSIG.

(c) Each fuel tank of less than 25 gallons capacity must not leak if tested under § 183.584.

(d) Each fuel tank with a capacity of 25 to 199 gallons must not leak if tested under § 183.586.

(e) Each fuel tank of 200 gallons capacity or more must not leak if tested under §§ 183.586 and 183.588.

[CGD 74–209, 42 FR 5950, Jan. 31, 1977, as amended by CGD 81–092, 48 FR 55736, Dec. 15, 1983]

§ 183.512 Fuel tanks: Prohibited materials.

(a) A fuel tank must not be constructed from terneplate.

(b) Unless it has an inorganic sacrificial galvanic coating on the inside and outside of the tank, a fuel tank must not be constructed from black iron or carbon steel.

(c) A fuel tank encased in cellular plastic or in fiber reinforced plastic must not be constructed from a ferrous alloy.

[CGD 74–209, 42 FR 5950, Jan. 31, 1977; 42 FR 24739, May 16, 1977]

§ 183.514 Fuel tanks: Labels.

(a) Each fuel tank must have a label that meets the requirements of paragraphs (b) through (d) of this section.

(b) Each label required by paragraph (a) of this section must contain the following information:

(1) Fuel tank manufacturer's name (or logo) and address.

(2) Month (or lot number) and year of manufacture.

(3) Capacity in U.S. gallons.

(4) Material of construction.

(5) The pressure the tank is designed to withstand without leaking.

(6) Model number, if applicable.

(7) The statement, ''This tank has been tested under 33 CFR 183.510(a).''

(8) If the tank is tested under § 183.584 at less than 25g vertical accelerations the statement, ''Must be installed aft of the boat's half length.''

(c) Each letter and each number on a label must:

(1) Be at least 1/16 inch high and

(2) Contrast with the basic color of the label or be embossed on the label.

(d) Each label must:

(1) Withstand the combined effects of exposure to water, oil, salt spray, direct sunlight, heat, cold, and wear expected in normal operation of the boat, without loss of legibility; and

(2) Resist efforts to remove or alter the information on the label without leaving some obvious sign of such efforts.

[CGD 74–209, 42 FR 5950, Jan. 31, 1977, as amended by CGD 81–092, 48 FR 55737, Dec. 15, 1983; USCG–1999–5832, 64 FR 34716, June 29, 1999]

§ 183.516 Cellular plastic used to encase fuel tanks.

(a) Cellular plastic used to encase metallic fuel tanks must:

(1) Not change volume by more than five percent or dissolve after being immersed in any of the following liquids for 24 hours at 29 °C:

(i) Reference fuel B ASTM D 471 (incorporated by reference, see § 183.5).

(ii) No. 2 reference oil of ASTM D 471 (incorporated by reference, see § 183.5).

(iii) Five percent solution of trisodium phosphate in water; and

(2) Not absorb more than 0.12 pound of water per square foot of cut surface, measure under Military Specification MIL P–21929B.

(b) Non-polyurethane cellular plastic used to encase metallic fuel tanks must have a compressive strength of at least 60 pounds per square inch at ten percent deflection measured under

ASTM D 1621 (incorporated by reference, see § 183.5), ''Compressive Strength of Rigid Cellular Plastics''.

(c) Polyurethane cellular plastic used to encase metallic fuel tanks must have a density of at least 2.0 pounds per cubic foot, measured under ASTM D 1622 (incorporated by reference, see § 183.5), ''Apparent Density of Rigid Cellular Plastics.''

[CGD 74–209, 42 FR 5950, Jan. 31, 1977, as amended by CGD 77–98, 42 FR 36253, July 14, 1977; CGD 81–092, 48 FR 55737, Dec. 15, 1983; USCG–2000–7223, 65 FR 40059, June 29, 2000]

§ 183.518 Fuel tank openings.

Each opening into the fuel tank must be at or above the topmost surface of the tank.

§ 183.520 Fuel tank vent systems.

(a) Each fuel tank must have a vent system that prevents pressure in the tank from exceeding 80 percent of the pressure marked on the tank label under § 183.514(b)(5).

(b) Each vent must:

(1) Have a flame arrester that can be cleaned unless the vent is itself a flame arrestor; and

(2) Not allow a fuel overflow at the rate of up to two gallons per minute to enter the boat.

[CGD 74–209, 42 FR 5950, Jan. 31, 1977, as amended by CGD 77–98, 42 FR 36253, July 14, 1977]

§ 183.524 Fuel pumps.

(a) Each diaphragm pump must not leak fuel from the pump if the primary diaphragm fails.

(b) Each electrically operated fuel pump must not operate except when the engine is operating or when the engine is started.

(c) If tested under § 183.590, each fuel pump, as installed in the boat, must not leak more than five ounces of fuel in 2½ minutes, inclusive of leaks from fuel line, fuel filter and strainer.

[CGD 74–209, 42 FR 5950, Jan. 31, 1977, as amended by CGD 77–98, 42 FR 36253, July 14, 1977]

§ 183.526 Carburetors.

(a) [Reserved]

(b) Each carburetor must not leak more than five cubic centimeters of fuel in 30 seconds when:

(1) The float valve is open;

(2) The carburetor is at half throttle; and

(3) The engine is cranked without starting; or

(4) The fuel pump is delivering the maximum pressure specified by its manufacturer.

(c) Each updraft and horizontal draft carburetor must have a device that:

(1) Collects and holds fuel that flows out of the carburetor venturi section toward the air intake;

(2) Prevents collected fuel from being carried out of the carburetor assembly by the shock wave of a backfire or by reverse air flow; and

(3) Returns collected fuel to the engine induction system after the engine starts,

[CGD 74–209, 42 FR 5950, Jan. 31, 1977, as amended by CGD 77–98, 42 FR 36253, July 14, 1977]

§ 183.528 Fuel stop valves.

(a) Each electrically operated fuel stop valve in a fuel line between the fuel tank and the engine must:

(1) Open electrically only when the ignition switch is on; and

(2) Operate manually.

(b) If tested in accordance with the fire test under § 183.590, a fuel stop valve installed in a fuel line system requiring metallic fuel lines or ''USCG Type A1'' hose must not leak fuel.

[CGD 74–209, 42 FR 5950, Jan. 31, 1977, as amended by CGD 85–098, 52 FR 19728, May 27, 1987]

§ 183.530 Spud, pipe, and hose fitting configuration.

Except when used for a tank fill line, each spud, pipe, or hose fitting used with hose clamps must have:

(a) A bead;

(b) A flare; or

(c) A series of annular grooves or serrations no less than 0.015 inches deep, except a continuous helical thread, knurl, or groove.

[CGD 74–209, 42 FR 5950, Jan. 31, 1977, as amended by USCG–1999–5832, 64 FR 34716, June 29, 1999]

§ 183.532 Clips, straps, and hose clamps.

(a) Each clip, strap, and hose clamp must:

(1) Be made from a corrosion resistant material; and

(2) Not cut or abrade the fuel line.

(b) If tested in accordance with the fire test under § 183.590, a hose clamp installed on a fuel line system requiring metallic fuel lines or ''USCG Type A1'' hose must not separate under a one pound tensile force.

[CGD 74–209, 42 FR 5950, Jan. 31, 1977, as amended by CGD 85–098, 52 FR 19728, May 27, 1987]

§ 183.534 Fuel filters and strainers.

If tested under § 183.590, each fuel filter and strainer, as installed in the boat, must not leak more than five ounces of fuel in 2½ minutes inclusive of leaks from the fuel pump and fuel line.

[CGD 77–98, 42 FR 36253, July 14, 1977]

§ 183.536 Seals and gaskets in fuel filters and strainers.

(a) [Reserved]

(b) Each gasket and each sealed joint in a fuel filter and strainer must not leak when subjected for 24 hours to a gasoline that has at least a 50 percent aromatic content at the test pressure marked on the fuel tank label.

[CGD 81–092, 48 FR 55737, Dec. 15, 1983]

§ 183.538 Metallic fuel line materials.

Each metallic fuel line connecting the fuel tank with the fuel inlet connection on the engine must:

(a) Be made of seamless annealed copper, nickel copper, or copper-nickel; and

(b) Except for corrugated flexible fuel line, have a minimum wall thickness of 0.029 inches.

§ 183.540 Hoses: Standards and markings.

(a) ''USCG Type A1'' hose means hose that meets the performance requirements of:

(1) SAE Standard J1527DEC85, Class 1 and the fire test in § 183.590; or

(2) Underwriters' Laboratories, Inc. (UL) Standard 1114.

(b) ''USCG Type A2'' hose means hose that meets the performance requirements of SAE Standard J1527DEC85, Class 2 and the fire test in § 183.590;

(c) ''USCG Type B1'' hose means hose that meets the performance requirements of SAE Standard J1527DEC85, Class 1.

(d) ''USCG Type B2'' hose means hose that meets the performance requirements of SAE Standard J1527DEC85, Class 2.

NOTE: SAE Class 1 hose has a permeation rating of 100 grams or less fuel loss per square meter of interior surface in 24 hours.

SAE Class 2 hose has a permeation rating of 300 grams or less fuel loss per square meter of interior surface in 24 hours.

(e) Each ''USCG Type A1,'' ''USCG Type A2,'' ''USCG Type B1,'' and ''USCG Type B2'' hose must be identified by the manufacturer by a marking on the hose.

(f) Each marking must contain the following information in English:

(1) The statement ''USCG TYPE (insert A1 or A2 or B1 or B2).''

(2) The year in which the hose was manufactured.

(3) The manufacturer's name or registered trademark.

(g) Each character must be block capital letters and numerals that are at least one eighth-inch high.

(h) Each marking must be permanent, legible, and on the outside of the hose at intervals of 12 inches or less.

[CGD 85–098, 52 FR 19728, May 27, 1987]

§ 183.542 Fuel systems.

(a) Each fuel system in a boat must have been tested by the boat manufacturer and not leak when subjected to the greater of the following pressures:

(1) Three pounds per square inch; or

(2) One and one-half times the pressure created in the lowest part of the fuel system when it is filled to the level of overflow with fuel.

(b) The test pressure shall be obtained with air or inert gas.

[CGD 81–092, 48 FR 55737, Dec. 15, 1983]

MANUFACTURER REQUIREMENTS

§ 183.550 Fuel tanks: Installation.

(a) Each fuel tank must not be integral with any boat structure or mounted on an engine.

(b) Each fuel tank must not move at the mounting surface more than onefourth inch in any direction.

(c) Each fuel tank must not support a deck, bulkhead, or other structural component.

(d) Water must drain from the top surface of each metallic fuel tank when the boat is in its static floating position.

(e) Each fuel tank support, chock, or strap that is not integral with a metallic fuel tank must be insulated from the tank surface by a nonmoisture absorbing material.

(f) Cellular plastic must not be the sole support for a metallic fuel tank.

(g) If cellular plastic is the sole support of a non-metallic fuel tank, the cellular plastic must meet the requirements of § 183.516 (b) or (c).

(h) Each fuel tank labeled under § 183.514(b)(8) for installation aft of the boat's half length must be installed with its center of gravity aft of the boat's half length.

[CGD 74–209, 42 FR 5950, Jan. 31, 1977, as amended by CGD 81–092, 48 FR 55737, Dec. 15, 1983; USCG–1999–5832, 64 FR 34716, June 29, 1999]

§ 183.552 Plastic encased fuel tanks: Installation.

(a) Each fuel tank encased in cellular plastic foam or in fiber reinforced plastic must have the connections, fittings, and labels accessible for inspection and maintenance.

(b) If a metallic fuel tank is encased in cellular plastic or in fiber reinforced plastic, water must not collect between the plastic and the surface of the tank or be held against the tank by capillary action.

(c) If the plastic is bonded to the surface of a metallic fuel tank, the adhesive strength of the metal to the plastic bond must exceed the cohesive strength of the plastic.

§ 183.554 Fittings, joints, and connections.

Each fuel system fitting, joint, and connection must be arranged so that it can be reached for inspection, removal, or maintenance without removal of permanent boat structure.

§ 183.556 Plugs and fittings.

(a) A fuel system must not have a fitting for draining fuel.

(b) A plug used to service the fuel filter or strainer must have a tapered pipethread or be a screw type fitted with a locking device other than a split lock washer.

§ 183.558 Hoses and connections.

(a) Each hose used between the fuel pump and the carburetor must be ''USCG Type A1'' hose.

(b) Each hose used—

(1) For a vent line or fill line must be:

(i) ''USCG Type A1'' or ''USCG Type A2''; or

(ii) ''USCG Type B1'' or ''USCG Type B2'' if no more than five ounces of fuel is discharged in 2½ minutes when:

(A) The hose is severed at the point where maximum drainage of fuel would occur,

(B) The boat is in its static floating position, and

(C) The fuel system is filled to the capacity market on the tank label under § 183.514(b)(3).

(2) From the fuel tank to the fuel inlet connection on the engine must be:

(i) ''USCG Type A1''; or

(ii) ''USCG Type B1'' if no more than five ounces of fuel is discharged in 2½ minutes when:

(A) The hose is severed at the point where maximum drainage of fuel would occur,

(B) The boat is in its static floating position, and

(C) The fuel system is filled to the capacity marked on the tank label under § 183.514(b)(3).

(c) Each hose must be secured by:

(1) A swaged sleeve;

(2) A sleeve and threaded insert; or

(3) A hose clamp.

(d) The inside diameter of a hose must not exceed the actual minor outside diameter of the connecting spud,

pipe, or fitting by more than the distance shown in Table 8.

TABLE 8

If minor outside diameter of the connecting spud, pipe, or fitting is—	The inside diameter of the hose must not exceed the minor outside diameter of the connecting spud, pipe, or hose fitting by more than the following distance:
Less than 3/8 in	0.020 in.
3/8 in. to 1 in	0.035 in.
Greater than 1 in	0.065 in.

[CGD 74–209, 42 FR 5950, Jan. 31, 1977, as amended by CGD 85–098, 52 FR 19728, May 27, 1987]

§ 183.560 Hose clamps: Installation.

Each hose clamp on a hose from the fuel tank to the fuel inlet connection on the engine, a hose between the fuel pump and the carburetor, or a vent line must:

(a) Be used with hose designed for clamps;

(b) [Reserved]

(c) Be beyond the bead, flare, or over the serrations of the mating spud, pipe, or hose fitting; and

(d) Not depend solely on the spring tension of the clamp for compressive force.

[CGD 74–209, 42 FR 5950, Jan. 31, 1977, as amended by CGD 81–092, 48 FR 55737, Dec. 15, 1983]

§ 183.562 Metallic fuel lines.

(a) Each metallic fuel line that is mounted to the boat structure must be connected to the engine by a flexible fuel line.

(b) Each metallic fuel line must be attached to the boat's structure within four inches of its connection to a flexible fuel line.

§ 183.564 Fuel tank fill system.

(a) Each fuel fill opening must be located so that a gasoline overflow of up to five gallons per minute for at least five seconds will not enter the boat when the boat is in its static floating position.

(b) Each hose in the tank fill system must be secured to a pipe, spud, or hose fitting by:

(1) A swaged sleeve;

(2) A sleeve and threaded insert; or

(3) Two adjacent metallic hose clamps that do not depend solely on the spring tension of the clamps for compressive force.

(c) Each hose clamp in the tank fill system must be used with a hose designed for clamps.

(d) Hose clamps used in the tank fill system must:

(1) Have a minimum nominal band width of at least one-half inch; and

(2) Be over the hose and the spud, pipe, or hose fitting.

[CGD 74–209, 42 FR 5950, Jan. 31, 1977, as amended by CGD 81–092, 48 FR 55737, Dec. 15, 1983]

§ 183.566 Fuel pumps: Placement.

Each fuel pump must be on the engine it serves or within 12 inches of the engine, unless it is a fuel pump used to transfer fuel between tanks.

§ 183.568 Anti-siphon protection.

Each fuel line from the fuel tank to the fuel inlet connection on the carburetor must:

(a) Be above the level of the tank top; or

(b) Have an anti-siphon device or an electrically operated fuel stop valve:

(1) At the tank withdrawal fitting; or

(2) Installed so the line from the fuel tank is above the top of the tank; or

(c) Provided that the fuel tank top is below the level of the carburetor inlet, be metallic fuel lines meeting the construction requirements of § 183.538 or ''USCG Type A1'' hose, with one or two manual shutoff valves installed as follows:

(1) Directly at the fuel tank connection arranged to be readily accessible for operation from outside of the compartment, and

(2) If the length of fuel line from the tank outlet to the engine inlet is greater than 12 feet, a manual shutoff valve shall be installed at the fuel inlet connection to the engine.

[CGD 74–209, 42 FR 5950, Jan. 31, 1977, as amended by CGD 81–092, 48 FR 55737, Dec. 15, 1983; CGD 85–098, 52 FR 19729, May 27, 1987]

§ 183.570 Fuel filters and strainers: Installation.

Each fuel filter and strainer must be supported on the engine or boat structure independent from its fuel line connections, unless the fuel filter or strainer is inside a fuel tank.

§ 183.572 Grounding.

Each metallic component of the fuel fill system and fuel tank which is in contact with fuel must be statically grounded so that the resistance between the ground and each metallic component of the fuel fill system and fuel tank is less than 100 ohms.

TESTS

§ 183.580 Static pressure test for fuel tanks.

A fuel tank is tested by performing the following procedures in the following order:

(a) Fill the tank with air or inert gas to the pressure marked on the tank label under § 183.514(b)(5).

(b) Examine each tank fitting and seam for leaks using a leak detection method other than the pressure drop method.

[CGD 74–209, 42 FR 5950, Jan. 31, 1977, as amended by CGD 81–092, 48 FR 55737, Dec. 15, 1983]

§ 183.584 Shock test.

A fuel tank is tested by performing the following procedures in the following order:

(a) Perform the static pressure test under § 183.580.

(b) If the tank is non-metallic, fill it to capacity with a gasoline that has at least a 50 percent aromatic content. Keep the fuel in the tank at 21 °C or higher for 30 days prior to testing.

(c) Mount the tank to the platform of an impact test machine.

(d) Fill the tank to capacity with water.

(e) Apply one of the following accelerations within three inches of the center of the horizontal mounting surface of the tank. The duration of each vertical acceleration pulse is measured at the base of the shock envelope.

(1) If the tank is not labeled under § 183.514(b)(8) for installation aft of the half length of the boat, apply 1000 cycles of 25g vertical accelerations at a rate of 80 cycles or less per minute. The duration of the acceleration pulse must be between 6 and 14 milliseconds.

(2) If the tank is manufactured for installation with its center of gravity aft of the half length of the boat, apply 1000 cycles of 15g vertical accelerations at a rate of 80 cycles or less per minute. The duration of the shock pulse must be between 6 and 14 milliseconds.

(f) Perform the static pressure test under § 183.580.

[CGD 74–209, 42 FR 5950, Jan. 31, 1977, as amended by USCG–1999–5832, 64 FR 34716, June 29, 1999]

§ 183.586 Pressure impulse test.

A fuel tank is tested by performing the following procedures in the following order:

(a) Perform the static pressure test under § 183.580.

(b) If the tank is non-metallic, fill it to capacity with a gasoline that has at least a 50 percent aromatic content. Keep the fuel in the tank at 21 °C or higher for 30 days prior to testing.

(c) Mount the tank on a test platform.

(d) Fill the tank to capacity with water.

(e) Cap and seal each opening in the tank.

(f) Apply 25,000 cycles of pressure impulse at the rate of no more than 15 impulses per minute varying from zero to three PSIG to zero inside the tank top from a regulated source of air, inert gas, or water.

(g) Perform the static pressure test under § 183.580.

§ 183.588 Slosh test.

A fuel tank is tested by performing the following procedures in the following order:

(a) Perform the static pressure test under § 183.580.

(b) Perform the pressure impulse test under § 183.586.

(c) Secure the tank to the platform of a tank rocker assembly.

(d) Fill the tank to one-half capacity with water.

(e) Cap and seal each opening in the tank.

(f) Apply 500,000 cycles or rocking motion 15 degrees to each side of the tank centerline at the rate of 15 to 20 cycles a minute. The axis of rotation of the rocker and fuel tank must be perpendicular to the centerline of the tank length at a level six inches or less above or below the tank's bottom.

(g) Perform the static pressure test under § 183.580.

[CGD 74–209, 42 FR 5950, Jan. 31, 1977, as amended by USCG–1999–5832, 64 FR 34716, June 29, 1999]

§ 183.590 Fire test.

(a) A piece of equipment is tested under the following conditions and procedures:

(1) Fuel stop valves, ''USCG Type A1'' or USCG Type A2'' hoses and hose clamps are tested in a fire chamber.

(2) Fuel filters, strainers, and pumps are tested in a fire chamber or as installed on the engine in the boat.

(3) Fuel tanks must be tested filled with fuel to one-fourth the capacity marked on the tank in a fire chamber or in an actual or simulated hull section.

(b) Each fire test is conducted with free burning heptane and the component must be subjected to a flame for 2½ minutes.

(c) If the component is tested in a fire chamber:

(1) The temperature within one inch of the component must be at least 648 °C sometime during the 2½ minute test;

(2) The surface of the heptane must be 8 to 10 inches below the component being tested; and

(3) The heptane must be in a container that is large enough to permit the perimeter of the top surface of the heptane to extend beyond the vertical projection of the perimeter of the component being tested.

(d) If the component is being tested as installed on an engine, heptane sufficient to burn 2½ minutes must be poured over the component and allowed to run into a flat bottomed pan under the engine. The pan must be large enough to permit the perimeter of the top surface of the heptane to extend beyond the vertical projection of the perimeter of the engine.

(e) If a fuel tank is being tested in an actual or simulated hull section, the actual or simulated hull section must be of sufficient size to contain enough heptane to burn for 2½ minutes in a place adjacent to the tank.

[CGD 74–209, 42 FR 5950, Jan. 31, 1977, as amended by CGD 77–98, 42 FR 36253, July 14, 1977; CGD 85–098, 52 FR 19729, May 27, 1987]

Subpart K—Ventilation

SOURCE: CGD 76–082, 44 FR 73027, Dec. 17, 1979, unless otherwise noted.

§ 183.601 Applicability.

This subpart applies to all boats that have gasoline engines for electrical generation, mechanical power, or propulsion.

[USCG–1999–5832, 64 FR 34716, June 29, 1999]

§ 183.605 Definitions.

As used in this subpart:

''Fuel'' means gasoline.

''Open to the atmosphere'' means a compartment that has at least 15 square inches of open area directly exposed to the atmosphere for each cubic foot of net compartment volume.

[CGD 76–082, 44 FR 73027, Dec. 17, 1979, as amended by CGD 85–098, 52 FR 19729, May 27, 1987]

§ 183.607 Incorporation by reference.

(a) The following standards are incorporated by reference. Copies may be obtained from the sources indicated. They are also available for inspection at Coast Guard Headquarters, 2100 2nd St., SW., Stop 7000, Washington, DC 20593–7000 and at the National Archives and Records Administration (NARA). For information on the availability of this material at NARA, call 202–741–6030, or go to: *http://www.archives.gov/federal_register/code_of_federal_regulations/ibr_locations.html.*

(1) AMCA Standard 210–74, Figure 12. Air Moving and Conditioning Association, 30 West University Drive, Arlington Heights, Illinois 60004.

(2) ASTM Standard D 471. American Society for Testing and Materials, 100 Barr Harbor Drive, West Conshohocken, PA 19428–2959.

(3) UL Standard 1128, Underwriters Laboratories, Incorporated, 12 Laboratory Drive, Research Triangle Park, NC 27709–3995.

(b) The Director of the Federal Register approved the incorporation by reference in paragraph (a)(2) on September 26, 1976 and the incorporations

in paragraphs (a) (1) and (3) on March 24, 1978.

[CGD 76–082, 44 FR 73027, Dec. 17, 1979, as amended by CGD 82–010, 48 FR 8273, Feb. 28, 1983; USCG–2000–7223, 65 FR 40059, June 29, 2000; 69 FR 18803, Apr. 9, 2004; USCG–2010–0351, 75 FR 36288, June 25, 2010]

§ 183.610 Powered ventilation system.

(a) Each compartment in a boat that has a permanently installed gasoline engine with a cranking motor must:

(1) Be open to the atmosphere, or

(2) Be ventilated by an exhaust blower system.

(b) Each exhaust blower or combination of blowers must be rated at an air flow capacity not less than that computed by the formulas given in Table 183.610, Column 2. Blower rating must be determined according to AMCA Standard 210–74, Figure 12, or UL Standard 1128.

TABLE 183.610

Col. 1 [1]	Col. 2 [2]	Col. 3 [3]
Below 34	Fr=50	Fo=20
34 to 100	Fr=1.5V	Fo=0.6V
Over 100	Fr=V/2+100	Fo=0.2V+40

[1] Net compartment volume of engine compartment and compartments open thereto (V) cubic feet.
[2] Rated blower capacity (Fr) cubic feet per minute.
[3] Blower system output (Fo) cubic feet per minute.

(c) Each exhaust blower system required by paragraph (a)(2) of this section must exhaust air from the boat at a rate which meets the requirements of Table 183.610, Column 3 when the engine is not operating.

(d) Each intake duct for an exhaust blower must be in the lower one-third of the compartment and above the normal level of accumulated bilge water.

(e) More than one exhaust blower may be used in combination to meet the requirements of this section.

(f) Each boat that is required to have an exhaust blower must have a label that:

(1) Is located as close as practicable to each ignition switch;

(2) Is in plain view of the operator; and

(3) Has at least the following information:

WARNING—GASOLINE VAPORS CAN EXPLODE. BEFORE STARTING ENGINE OPERATE BLOWER FOR 4 MINUTES AND CHECK ENGINE COMPARTMENT BILGE FOR GASOLINE VAPORS.

§ 183.620 Natural ventilation system.

(a) Except for compartments open to the atmosphere, a natural ventilation system that meets the requirements of § 183.630 must be provided for each compartment in a boat that:

(1) Contains a permanently installed gasoline engine;

(2) Has openings between it and a compartment that requires ventilation, where the aggregate area of those openings exceeds 2 percent of the area between the compartments, except as provided in paragraph (c) of this section;

(3) Contains a permanently installed fuel tank and an electrical component that is not ignition protected in accordance with § 183.410(a);

(4) Contains a fuel tank that vents into that compartment; or

(5) Contains a non-metallic fuel tank:

(i) With an aggregate permeability rate exceeding 1.2 grams of fuel loss in 24 hours per cubic foot of net compartment volume, or

(ii) If the net compartment volume is less than one cubic foot, having a permeability rate exceeding 1.2 grams of fuel loss in 24 hours.

NOTE: Reference fuel ''C'' at 40 degrees Celsius plus or minus 2 degrees Celsius from ASTM standard D 471 (incorporated by reference, see § 183.5) is to be used in determining the permeability rate.

(b) Each supply opening required in § 183.630 must be located on the exterior surface of the boat.

(c) An accommodation compartment above a compartment requiring ventilation that is separated from the compartment requiring ventilation by a deck or other structure is excepted from paragraph (a)(2) of this section.

[CGD 76–082, 44 FR 73027, Dec. 17, 1979, as amended by CGD 76–082(a), 46 FR 27645, May 21, 1981; CGD 85–059, 51 FR 37577, Oct. 23, 1986; USCG–1999–5832, 64 FR 34716, June 29, 1999; USCG–1999–5151, 64 FR 67176, Dec. 1, 1999]

§ 183.630 Standards for natural ventilation.

(a) For the purpose of § 183.620, ''natural ventilation'' means an airflow in a compartment in a boat achieved by having:

(1) A supply opening or duct from the atmosphere or from a ventilated compartment or from a compartment that is open to the atmosphere; and

(2) An exhaust opening into another ventilated compartment or an exhaust duct to the atmosphere.

(b) Each exhaust opening or exhaust duct must originate in the lower third of the compartment.

(c) Each supply opening or supply duct and each exhaust opening or exhaust duct in a compartment must be above the normal accumulation of bilge water.

(d) Except as provided in paragraph (e) of this section, supply openings or supply ducts and exhaust openings or exhaust ducts must each have a minimum aggregate internal cross-sectional area calculated as follows:

$$A=5 \ln (V/5);$$

where:

(1) A is the minimum aggregate internal cross-sectional area of the openings or ducts in square inches;

(2) V is the net compartment volume in cubic feet, including the net volume of other compartments connected by openings that exceed 2 percent of the area between the compartments; and

(3) ln (V/5) is the natural logarithm of the quantity (V/5).

(e) The minimum internal cross-sectional area of each supply opening or duct and exhaust opening or duct must exceed 3.0 square inches.

(f) The minimum internal cross-sectional area of terminal fittings for flexible ventilation ducts installed to meet the requirements of paragraph (d) of this section must not be less than 80 percent of the required internal cross-sectional area of the flexible ventilation duct.

[CGD 76–082, 44 FR 73027, Dec. 17, 1979; 45 FR 7544, Feb. 4, 1980]

Subpart L—Start-in-Gear Protection

SOURCE: CGD 79–137, 46 FR 3515, Jan. 15, 1981, unless otherwise noted.

§ 183.701 Applicability.

This subpart applies to outboard motors and starting controls, and to manufacturers, distributors or dealers installing such equipment.

[USCG–1999–5832, 64 FR 34716, June 29, 1999]

§ 183.705 Definitions.

For the purposes of this subpart:

(a) *Outboard motor* means a self-contained propulsion system of any horsepower rating designed to be installed on, and removable from the transom of a boat.

(b) *Static thrust* means the forward or backward thrust developed by an outboard motor and associated propulsion unit while stationary.

(c) *Starting control* means the motor throttle, shift and starting control mechanisms located at a position remote from the outboard motor.

(d) *Local starting* means operating a mechanical or electrical starting device built into the outboard motor.

(e) *Distributor* means any person engaged in the sale and distribution of boats or associated equipment for the purpose of resale.

(f) *Dealer* means any person who is engaged in the sale and distribution of boats or associated equipment to purchasers who the seller in good faith believes to be purchasing any such boat or associated equipment for purposes other than resale.

§ 183.710 Start-in-gear protection required.

(a) Any outboard motor which is capable of developing a static thrust of 115 pounds or more at any motor operating speed with any propeller or jet attachment recommended for or shipped with the motor by the manufacturer, must be equipped with a device to prevent the motor being started when controls are set so as to attain that thrust level, as follows:

(1) Outboard motors designed for local starting must have a built-in start-in-gear protection device.

(2) Outboard motors designed for remote starting must have either a built-in start-in-gear protection device or be installed with remote starting controls containing this device. An outboard motor designed for remote starting that does not have a built-in start-in-gear protection device must, at the time of sale, have a tag or label attached at the location of the control

connection, containing the following information: ''Starting controls installed with this motor must comply with USCG requirements for start-in-gear protection in 33 CFR Part 183, Subpart L.'' The letters and numbers on the tag or label must be at least ⅛ inch high.

(b) Starting controls must have a tag or label with the following information to indicate whether or not they have been equipped with a start-in-gear protection device: ''This control will (or will not) provide start-in-gear protection meeting USCG requirements of 33 CFR Part 183, Subpart L.'' The letters and numbers on the tag or label must be at least ⅛ inch high.

(c) Any manufacturer, distributor or dealer installing an outboard motor displaying the label described in paragraph (a)(2) of this section must properly match it with a compatible starting control that contains a start-in-gear protection device.

§ 183.715 Exception.

Outboard motors designed to be equipped for remote starting, but which also have a provision for local starting in emergencies, need not comply with § 183.710 for their local starting system. However, the following information must be displayed on the motor: ''Warning—Ensure shift control is in neutral before starting motor''. This information must be clearly visible to a person using the emergency starting device.

Subpart M—Navigation Lights

SOURCE: USCG–1999–6580, 66 FR 55091, Nov. 1, 2001, unless otherwise noted.

§ 183.801 Applicability.

This subpart applies to recreational vessel manufacturers, distributors, and dealers installing such equipment in new recreational vessels constructed after November 1, 2002.

§ 183.803 Definitions.

As used in this subpart:

Dealer means any person who is engaged in the sale and distribution of recreational vessels to purchasers who the seller in good faith believes to be purchasing any such recreational vessel for purposes other than resale.

Distributor means any person engaged in the sale and distribution of recreational vessels for the purpose of resale.

Manufacturer means any person engaged in:

(1) The manufacture, construction, or assembly of recreational vessels, or

(2) The importation of recreational vessels into the United States for subsequent sale.

Navigation lights are those lights prescribed by the Navigation Rules (Commandant Instruction 16672.2 series) to indicate a vessel's presence, type, operation, and relative heading.

§ 183.810 Navigation light certification requirements.

(a) Except as provided by paragraph (b) of this section, each navigation light must—

(1) Meet the technical standards of the applicable Navigation Rules;

(2) Be certified by a laboratory listed by the Coast Guard to the standards of ABYC A–16 (incorporated by reference, see § 183.5) or equivalent, although portable battery-powered lights need only meet the requirements of the standard applicable to them; and

(3) Bear a permanent and indelible label that is visible without removing or disassembling the light and that states the following:

(i) ''USCG Approval 33 CFR 183.810.''

(ii) ''MEETS_____.'' (Insert the identification name or number of the standard under paragraph (a)(2) of this section, to which the laboratory type-tested.)

(iii) ''TESTED BY_____.'' (Insert the name or registered certification-mark of the laboratory listed by the Coast Guard that tested the fixture to the standard under paragraph (a)(2) of this section.)

(iv) Name of manufacturer.

(v) Number of model.

(vi) Visibility of the light in nautical miles.

(vii) Date on which the light was type-tested.

(viii) Identification and specifications of the bulb used in the compliance test.

(b) If a light is too small to attach the required label—

(1) Place the information from the label in or on the package that contains the light; and

(2) Mark each light ''USCG'' followed by the certified range of visibility in nautical miles (nm), for example, ''USCG 2nm''. Once installed, this mark must be visible without removing the light.

Subpart N [Reserved]

PARTS 184–186 [RESERVED]

PART 187—VESSEL IDENTIFICATION SYSTEM

Subpart A—General

Sec.
187.1 Which States are affected by this part?
187.3 What vessels are affected by this part?
187.5 What are the purposes of this part?
187.7 What are the definitions of terms used in this part?
187.9 What is a vessel identifier and how is one assigned?
187.11 What are the procedures to participate in VIS?
187.13 What are the procedures for obtaining certification of compliance with guidelines for State vessel titling systems?
187.15 When is a mortgage a preferred mortgage?

Subpart B—Information To Be Collected by Participating States

187.101 What information must be collected to identify a vessel owner?
187.103 What information must be collected to identify a vessel?
187.105 What information on titled vessels must be collected and what may be collected?
187.107 What information must be made available to assist law enforcement officials and what information may be made available?

Subpart C—Requirements for Participating in VIS

187.201 What are the compliance requirements for a participating State?
187.203 What are the voluntary provisions for a participating State?

Subpart D—Guidelines for State Vessel Titling Systems

187.301 What are the eligibility requirements for certification of a State titling system to confer preferred mortgage status?
187.303 What terms must a State define?
187.304 What vessels must be titled?
187.305 What are the requirements for applying for a title?
187.307 What are dealer and manufacturer provisions?
187.309 What are the requirements for transfer of title?
187.311 What are the application requirements for a certificate of title because of a transfer by operation of law or order of court?
187.313 Must a State honor a prior State title, Coast Guard documentation, and foreign registry?
187.315 What happens when a title is surrendered for the purposes of documentation?
187.317 What information must be on a certificate of title?
187.319 What are the requirements for applying for a redundant title?
187.321 What are the hull identification number (HIN) provisions?
187.323 What are the procedures for perfection of security interests?
187.325 Is a State required to specify procedures for the assignment of a security interest?
187.327 What are a State's responsibilities concerning a discharge of security interests?
187.329 Who prescribes and provides the forms to be used?
187.331 What information is to be retained by a State?

APPENDIX A TO PART 187—PARTICIPATING AUTHORITIES
APPENDIX B TO PART 187—PARTICIPATING AND CERTIFIED VESSEL TITLING AUTHORITIES

AUTHORITY: 46 U.S.C. 2103, 12501; Department of Homeland Security Delegation No. 0170.1(92).

SOURCE: USCG–1999–6420, 66 FR 15630, Mar. 20, 2001, unless otherwise noted.

Subpart A—General

§ 187.1 Which States are affected by this part?

States electing to participate in the Vessel Identification System (VIS) are affected by this part.

§ 187.3 What vessels are affected by this part?

Only vessels numbered or titled by a participating State are affected by this

part. Vessels documented under 46 U.S.C. chapter 121 and 46 CFR parts 67 and 68 are not affected.

§ 187.5 What are the purposes of this part?

The purposes of this part are to—

(a) Establish minimum requirements for States electing to participate in VIS;

(b) Prescribe guidelines for State vessel titling systems; and

(c) Explain how to obtain certification of compliance with State guidelines for vessel titling systems for the purpose of conferring preferred status on mortgages, instruments, or agreements under 46 U.S.C. 31322(d).

§ 187.7 What are the definitions of terms used in this part?

As used in this part—

Approved Numbering System means a numbering system approved by the Secretary of the Department of Homeland Security under 46 U.S.C. Chapter 123.

Certificate of Documentation means the certificate issued by the Coast Guard for a documented vessel under 46 U.S.C. 12103 (Form CG–1270).

Certificate of Origin or *COO* means a document establishing the initial chain of ownership, such as a manufacturer's certificate of origin (MCO) or statement of origin (MSO), an importer's certificate of origin (ICO) or statement of origin (ISO), or a builder's certification (Form CG–1261; see 46 CFR part 67).

Certificate of Ownership means the Certificate of Ownership issued by the Coast Guard under 46 CFR part 67 (Form CG–1330).

Commandant means the Commandant of the United States Coast Guard.

Dealer means any person who engages wholly or in part in the business of buying, selling, or exchanging new or used vessels, or both, either outright or on conditional sale, bailment, lease, chattel mortgage or otherwise. A dealer must have an established place of business for the sale, trade, and display of such vessels.

Documented vessel means a vessel documented under 46 U.S.C. chapter 121.

Hull Identification Number or *HIN* means the number assigned to a vessel under subpart C of 33 CFR part 181.

Issuing authority means either a State that has an approved numbering system or the Coast Guard in a State that does not have an approved numbering system.

Manufacturer means any person engaged in the business of manufacturing or importing new vessels for the purpose of sale or trade.

Owner means a person, other than a secured party, having property rights in, or title to, a vessel. ''Owner'' includes a person entitled to use or possess a vessel subject to a security interest in another person, but does not include a lessee under a lease not intended as security.

Participating State means a State certified by the Commandant as meeting the requirements of subpart C of this part. States meeting this definition will be listed in appendix A to this part.

Person means an individual, firm, partnership, corporation, company, association, joint-stock association, or governmental entity and includes a trustee, receiver, assignee, or similar representative of any of them.

Secured party means a lender, seller, or other person in whose favor there is a security interest under applicable law.

Security interest means an interest that is reserved or created by an agreement under applicable law and that secures payment or performance of an obligation.

State means a State of the United States, the District of Columbia, American Samoa, Guam, Northern Mariana Islands, Puerto Rico, U.S. Virgin Islands, and any other territory or possession of the United States.

Titled vessel means a vessel titled by a State.

Titling authority means a State whose vessel titling system has been certified by the Commandant under subpart D of this part. Titling authorities participating in VIS will be listed in appendix B to this part.

Vessel includes every description of watercraft, other than a seaplane on the water, used or capable of being

used as a means of transportation on water.

Vessel Identification System or *VIS* means a system for collecting information on vessels and vessel ownership as required by 46 U.S.C. 12501.

[USCG–1999–6420, 66 FR 15630, Mar. 20, 2001, as amended by USCG–2008–0179, 73 FR 35024, June 19, 2008]

§ 187.9 What is a vessel identifier and how is one assigned?

(a) The vessel identifier for a vessel having a valid HIN is the HIN.

(b) If a vessel does not have a valid HIN, a vessel identifier is assigned under the following table:

TABLE 187.9(b)—VESSEL IDENTIFIER ASSIGNMENTS

If the vessel is:	And does not have a valid HIN:	Then the vessel identifier is:
(1) Documented		The official number assigned by the Coast Guard under 46 CFR part 67.
(2) Documented	And is transferred to a new owner	The HIN assigned by the Coast Guard.
(3) Undocumented	And must be numbered under 33 CFR parts 173 and 174.	The number issued on a certificate of number by the issuing authority of the State of principal operation, provided the number will not be used in the future to identify a different vessel.
(4) Undocumented	And is transferred to a new owner	The HIN assigned by the issuing authority of the State of principal operation.
(5) Undocumented	And the vessel is required to be numbered or titled in a new State of principal operation.	The HIN assigned by the issuing authority of the State of principal operation.

§ 187.11 What are the procedures to participate in VIS?

(a) A State wanting to participate in VIS must inform the Commandant in writing, describing its willingness and ability to comply with each requirement of § 187.201 of this part. If the Commandant is satisfied that the State will comply fully with § 187.201 of this part, the State will be allowed to participate in VIS and will be listed in Appendix A to this part, for as long as the Commandant determines that the State complies fully with § 187.201 of this part.

(b) A State wanting to participate in VIS but unable to comply with one or more requirements of § 187.201 of this part may participate in VIS under one or more waivers, for good cause shown. For purposes of this section, ''good cause'' includes the existence of State law prohibiting full compliance. A State wanting to participate in VIS under one or more waivers must—

(1) Inform the Commandant in writing;

(2) Describe the requirement or requirements for which waiver is sought and the good cause for noncompliance; and

(3) Describe the steps the State intends to take to remove the good cause and the anticipated time needed to do so.

(c) The Commandant may allow a State to participate in VIS under one or more waivers, pursuant to a memorandum of agreement between the Coast Guard and the State.

(1) The memorandum of agreement recites the information provided by the State under paragraph (b) of this section and is valid for not more than 3 years, during which time the State will be deemed to participate in VIS and be listed in Appendix A to this part.

(2) The State may withdraw from the memorandum of agreement and participation in VIS upon written notice to the Commandant. The Commandant may terminate the memorandum of agreement and the State's participation in VIS for non-compliance with the terms of the memorandum.

(3) Participation in VIS under one or more waivers beyond the term of the initial memorandum of agreement requires a new memorandum.

(4) If the good cause for waivers is eliminated within the term of the memorandum of agreement, the State may so inform the Commandant in writing. The Commandant may then

consider the State to participate in VIS under paragraph (a) of this section.

[USCG–2003–14963, 77 FR 18703, Mar. 28, 2012]

§ 187.13 What are the procedures for obtaining certification of compliance with guidelines for State vessel titling systems?

(a) A State must submit a written request to the Commandant (CG–5422). The request must include a copy of the State's titling laws, regulations and administrative procedures, and certify that the State will comply with the VIS participation requirements in subpart C of this part.

(b) The Commandant will review the request and determine if the State is complying with the Guidelines for State Vessel Titling Systems in subpart D of this part. If the State is complying with the guidelines, the Commandant will certify compliance and list the State in appendix B to this part.

(c) Appendix B to this part will list States certified by the Commandant. When the Commandant determines that a State is not complying with the vessel titling guidelines, it will lose its certification and be deleted from appendix B to this part.

[USCG–1999–6420, 66 FR 15630, Mar. 20, 2001, as amended by USCG–2008–0179, 73 FR 35024, June 19, 2008]

§ 187.15 When is a mortgage a preferred mortgage?

A mortgage, instrument, or agreement granting a security interest perfected under State law covering the whole of a vessel titled under the law of a participating State is a preferred mortgage if the State is certified under § 187.13.

Subpart B—Information to be Collected by Participating States

§ 187.101 What information must be collected to identify a vessel owner?

(a) A participating State must collect the following information for a vessel it has numbered or titled when an individual owns the vessel and make it available to VIS:

(1) Names of all owners.

(2) Principal residence of one owner.

(3) Mailing Address, if different from the address in paragraph (a)(2) of this section.

(4) Owner identifier, which must be the owner's tax identification number, date of birth together with driver's license number, or date of birth together with other unique number.

(b) A participating State must collect the following information for a vessel that it has numbered or titled when the vessel's owner is not an individual, but a business or other type of organization:

(1) Names of all businesses or organizations that own the vessel.

(2) Principal address of one business or organization.

(3) Mailing address, if different from the address in paragraph (b)(2) of this section.

(4) Taxpayer Identification Number (TIN) for the principal business or organization.

(5) If the TIN for the principal business or organization is not available, one of the following unique identifiers for a corporate officer, a partner, or the individual who signed the application for numbering:

(i) Owner identifier, which must be the owner's tax identification number, date of birth together with driver's license number, or date of birth together with other unique number.

(ii) [Reserved]

[USCG–1999–6420, 66 FR 15630, Mar. 20, 2001, as amended by USCG–2003–14963, 77 FR 18703, Mar. 28, 2012]

§ 187.103 What information must be collected to identify a vessel?

A participating State must collect the following information on a vessel it has numbered or titled and make it available to VIS:

(a) Manufacturer's hull identification number, if any.

(b) Official number, if any, assigned by the Coast Guard or its predecessor.

(c) Number on certificate of number assigned by the issuing authority of the State.

(d) Expiration date of certificate of number.

(e) Number previously issued by an issuing authority.

(f) Make and model of vessel.

(g) Model year.

(h) Overall length of vessel.

(i) Vessel type: Authorized terms are ''air boat'', ''auxiliary sail'', ''cabin motorboat'', ''houseboat'', ''inflatable boat'', ''open motorboat'', ''paddlecraft'', ''personal watercraft'', ''pontoon boat'', ''rowboat'', ''sail only'', or ''other''.

(j) Hull material: Authorized terms are ''aluminum'', ''fiberglass'', ''plastic'', ''rubber/vinyl/canvas'', ''steel'', ''wood'', or ''other''.

(k) Propulsion type: Authorized terms are ''air thrust'', ''manual'', ''propeller'', ''sail'', ''water jet'', or ''other''.

(l) Engine drive type: Authorized terms are ''inboard'', ''outboard'', ''pod drive'', ''sterndrive'', or ''other''.

(m) Fuel: Authorized terms are ''electric'', ''diesel'', ''gas'', or ''other''.

(n) Primary operation: Authorized terms are, ''charter fishing'', ''commercial fishing'', ''commercial passenger carrying'', ''dealer or manufacturer demonstration'', ''other commercial operation'', ''pleasure'', or ''rent or lease''.

[USCG–2003–14963, 77 FR 18704, Mar. 28, 2012]

§ 187.105 What information on titled vessels must be collected and what may be collected?

(a) A participating State must collect the following information on a vessel it has titled and make it available to VIS:

(1) Information required under § 187.103.

(2) Title number.

(3) Issuance date of the most recently issued title or redundant.

(4) Where evidence may be found on the security interest or lien against the vessel.

(5) Name of each secured party.

(6) Address (city and State) of each secured party.

(b) A participating State may collect the following information on a vessel it has titled and make it available to VIS:

(1) Information concerning the discharge of the security interest.

(2) Information concerning the surrender of the certificate of title.

§ 187.107 What information must be made available to assist law enforcement officials and what information may be made available?

(a) A participating State must make the following information available to VIS for use by law enforcement officials:

(1) Vessel identifier(s), as required by § 187.9.

(2) Notice of law enforcement status. Authorized terms are ''lost'', ''stolen'', ''destroyed'', ''abandoned'', or ''recovered''.

(3) Date of notice of law enforcement status.

(4) Point of contact for the agency or official reporting the status.

(5) National Crime Information Center code for the reporting agency or official.

(b) A participating State may make the following information available to law enforcement officials:

(1) Notice that the vessel is being sought for a law enforcement purpose other than a purpose listed in paragraph (a)(2) of this section.

(2) Location of vessel when reported lost, stolen, destroyed, abandoned, or recovered.

(3) Vessel insurance policy number.

(4) Name of insurance company.

(5) Address of insurance company.

(6) Mailing address of insurance company, if different from the address in paragraph (b)(5) of this section.

(7) Telephone number of insurance company.

(8) Date the vessel was recovered.

(9) Location of the vessel when recovered.

(10) Names and telephone numbers of contacts not listed under paragraph (a)(4) of this section.

(11) Request to be notified if vessel is sighted.

(12) Purpose of sighting notification request.

(13) Date and time vessel last sighted.

(14) Location of vessel when last sighted.

Subpart C—Requirements for Participating in VIS

§ 187.201 What are the compliance requirements for a participating State?

A participating State must comply with the following requirements:

(a) Collect the required information listed in subpart B of this part and provide that information to VIS under the applicable Coast Guard-State Memorandum of Agreement.

(b) Obtain specific evidence of ownership, such as the COO or current certificate of title and/or number, to identify a vessel's owner.

(c) Retain previously issued evidence of ownership, such as certificate of number, title, or Certificate of Documentation, and notify the issuing authority or the Coast Guard by mail or electronic message.

(d) Retain information identifying the type of evidence used to establish the accuracy of the information required to be made available to VIS and make it available to the Commandant upon request.

(e) Update the information required to be made available to VIS by providing, within 48 hours, a copy of transactions that enter, modify, or cancel records in the vessel files.

§ 187.203 What are the voluntary provisions for a participating State?

A participating State may—

(a) Provide VIS with the optional information listed in subpart B of this part;

(b) Make available to VIS updated information provided by the vessel owner, government agency, or secured party about a vessel that has been moved to a non-participating State of principal operation; and

(c) Interact with non-participating States to make information available to, or request information from, VIS concerning a vessel or nationwide statistics.

Subpart D—Guidelines for State Vessel Titling Systems

§ 187.301 What are the eligibility requirements for certification of a State titling system to confer preferred mortgage status?

The Commandant, under 46 U.S.C. 31322(d)(1)(A) and § 187.13, may certify a State vessel titling system that meets the requirements of this subpart as complying with the guidelines for vessel titling systems. This certification is for the purpose of conferring preferred mortgage status on a mortgage, instrument, or agreement granting a security interest perfected under State law, covering the whole of a vessel titled in that State. The State must also comply with the VIS participation requirements of § 187.11 and subpart C of this part and make vessel information it collects available to VIS.

§ 187.303 What terms must a State define?

A State must define the terms ''certificate of origin'', ''dealer'', ''documented vessel'', ''issuing authority'', ''manufacturer'', ''owner'', ''person'', ''secured party'', ''security interest'', ''titling authority'', and ''vessel'' substantially as defined in § 187.7.

§ 187.304 What vessels must be titled?

A State must require that all vessels required to be numbered in the State under 46 U.S.C. chapter 123 be titled only in that State, if that State issues titles to that class of vessels.

§ 187.305 What are the requirements for applying for a title?

(a) A State must require application for a title within a specified period of time, not to exceed 60 days, after a vessel required to be titled is first purchased, ownership is transferred, or there is a change in vessel data listed on the certificate of title.

(b) A State must require disclosure in its titling application form of any secured party holding an unsatisfied security interest in the vessel.

(c) The application must include an entry for identification of the State or country in which the vessel was last

numbered, titled, documented, or registered under the laws of a foreign country.

(d) A State must require that a COO for a vessel be submitted together with the application for any new vessel not previously numbered, titled, documented, or registered under the laws of a foreign country.

(e) A State must require that the application include a signed certification that the statements made are true and correct to the best of the applicant's knowledge, information, and belief, under penalty of perjury or similar penalties as prescribed by State law.

§ 187.307 What are dealer and manufacturer provisions?

A State must include the following provisions applicable to any dealer or manufacturer building, buying, acquiring, selling, or transferring a vessel in that State:

(a) Dealers or manufacturers must not be allowed to apply for a certificate of title for a vessel not required to be numbered. Dealers or manufacturers owning a new or used vessel primarily used in their business, held for sale or lease, and required to be numbered may be permitted or required to apply for a certificate of title for the vessel. The State may impose other reporting requirements on dealers or manufacturers.

(b) Dealers or manufacturers transferring a vessel required to be titled in the name of the dealer or manufacturer must be required to assign the title to the new owner or, for a new vessel, assign a COO for a new vessel. Dealers or manufacturers transferring a vessel permitted to be titled in their name must be required to assign to the new owner any certificate of title which has been issued and not surrendered.

(c) Dealers or manufacturers must not be permitted to provide a redundant COO if VIS contains information concerning the vessel.

(d) Dealers or manufacturers must be permitted to provide a redundant COO to the vessel owner only upon receipt of information concerning the original certificate and the circumstances of its loss, theft, mutilation, or destruction and receipt of any recovered original COO or remains from the vessel owner. This information must be declared under penalty of perjury or similar penalties as prescribed by State law. The term ''REDUNDANT'' must be clearly and permanently marked on the face of a redundant COO.

(e) Dealers or manufacturers must be required to maintain for at least 3 years a record of any vessel bought, sold, exchanged, or received for sale or exchange, and open such records for inspection by the State.

§ 187.309 What are the requirements for transfer of title?

To complete the sale, assignment, or transfer of a titled vessel, a State must require that a manufacturer, dealer, or individual must deliver the vessel's certificate of title to the new owner or new owner's designee, except for transfers by operation of law or order of court.

§ 187.311 What are the application requirements for a certificate of title because of a transfer by operation of law or order of court?

A State must require a new owner to apply for a certificate of title within a specified period of time, not to exceed 60 days, after ownership of a vessel is transferred by operation of law or order of court. This application must include an original or authenticated copy of the legal transfer document.

§ 187.313 Must a State honor a prior State title, Coast Guard documentation, and foreign registry?

(a) A State must honor a title issued by another State as proof of ownership for transfer or sale of a vessel and for applying for a certificate of number or title in the new State of principal operation.

(b) A State must honor a Coast Guard-issued Certificate of Ownership or a Certificate of Deletion as proof of ownership and deletion from documentation.

(c) A State must honor an authenticated copy of a foreign registry, or evidence of deletion from the foreign registry, as proof of ownership and deletion from the foreign registry.

§ 187.315 What happens when a title is surrendered for the purposes of documentation?

A State title is invalid when it is surrendered to the Coast Guard in exchange for a Certificate of Documentation. Upon notification from the Coast Guard of the surrender of a title, a State must process the cancellation of the title.

§ 187.317 What information must be on a certificate of title?

(a) A certificate of title must contain the following information concerning the vessel:

(1) Names of all owners (individuals, businesses, and organizations).

(2) Address of one individual, business, or organization owning the vessel.

(3) Title number.

(4) Date of issuance of title.

(5) Vessel identifier under § 187.9.

(6) Name of manufacturer, builder, or make.

(7) Model year, manufacture year, or year built.

(8) Overall length.

(9) Vessel type. Authorized terms are ''open motorboat'', ''cabin motorboat'', ''auxiliary sail'', ''sail only'', ''personal watercraft'', ''pontoon'', ''houseboat'', ''rowboat'', ''canoe/kayak'', or ''other''.

(10) Hull material. Authorized terms are ''wood'', ''aluminum'', ''steel'', ''fiberglass'', ''rigid hull inflatable'', ''rubber/vinyl/canvas'', or ''other''.

(11) Propulsion type. Authorized terms are ''propeller'', ''sail'', ''water jet'', ''air thrust'', or ''manual''.

(12) Engine drive type. Authorized terms are ''outboard'', ''inboard'', or ''inboard/stern drive''.

(13) Name of each secured party.

(14) Address (city and State) of each secured party.

(15) Recording or perfection date of new security interest and original recording or perfection date of any security interest outstanding.

(b) Space must be provided on the title form for assignment of interests in the vessel, with a signed certification that the statements made are true and correct to the best of the owner's knowledge, information, and belief, under penalty of perjury or similar penalties as prescribed by State law.

§ 187.319 What are the requirements for applying for a redundant title?

(a) A State must require the holder (owner or secured party) of an original title to apply for a redundant title after the discovery of the loss, theft, mutilation, or destruction of the original.

(b) The holder must provide information, declared under penalty of perjury or similar penalties as prescribed by State law, concerning the original certificate and the circumstances of its loss, theft, mutilation, or destruction.

(c) The holder must surrender to the State any recovered original title or remains.

(d) The State must clearly and permanently mark the face of a redundant certificate of title with the term ''REDUNDANT.''

§ 187.321 What are the hull identification number (HIN) provisions?

A State must—

(a) Upon proof of ownership, assign an HIN and require that it be affixed to a vessel that does not have an HIN at the time of application for certificate of number or title; and

(b) Prohibit removal or alteration of an HIN without authorization from the Commandant.

§ 187.323 What are the procedures for perfection of security interests?

(a) A State must specify, at a minimum, the following procedures for perfection of a security interest in a vessel titled in that State:

(1) Submission of an application for new or amended certificate of title on which the secured party must be noted.

(2) Surrender of any outstanding certificate of number and any outstanding title issued by another State.

(3) Surrender of the Certificate of Documentation of any documented vessel that is to be numbered and titled by the State.

(4) Submission of an authenticated copy of any foreign registry of the vessel and evidence of deletion from the foreign registry of the vessel that is to be numbered and titled by the State.

(5) Determination of the date of perfection.

(b) A State must recognize, under 46 U.S.C. 31322(e)(1), that, if a vessel is

covered by a preferred mortgage when an application for a certificate of title is filed in that State, then the status of the preferred mortgage covering the vessel is determined by the law of the jurisdiction in which the vessel is currently titled or documented.

(c) A State must recognize, under 46 U.S.C. 31322(d)(2), that, if a vessel titled in a State is covered by a preferred mortgage, that mortgage will continue to be a preferred mortgage even if the vessel is no longer titled in the State where the mortgage, instrument, or agreement granting a security interest perfected under State law became a preferred mortgage.

(d) A State must recognize, under 46 U.S.C. 31322(d)(1), the preferred status of a mortgage, instrument, or agreement granting a security interest perfected under State law covering the whole of a vessel titled in a State after the Commandant has certified that State's titling system and the State participates in VIS with respect to the vessel.

(e) The State must provide that the perfection procedures required to be established under this section do not apply to—

(1) A lien given by statute or rule of law to a supplier of services or materials for the vessel;

(2) A lien given by statute to the United States, a State, or a political subdivision thereof;

(3) A lien arising out of an attachment of a vessel;

(4) A security interest in a vessel created by a dealer or manufacturer who holds the vessel for sale, irrespective of whether the vessel is titled;

(5) A security interest claimed in a vessel's proceeds, as defined in the Uniform Commercial Code in effect in the State, if the security interest in the vessel did not have to be noted on a vessel's title in order to be perfected; or

(6) Any vessel for which a certificate of title is not required in the State.

§ 187.325 Is a State required to specify procedures for the assignment of a security interest?

Yes, a State must specify the procedures that apply to the assignment of a security interest in a vessel titled in that State.

§ 187.327 What are a State's responsibilities concerning a discharge of security interests?

A State must specify the evidence and information that a secured party is required to submit regarding discharge of a security interest and establish procedures for its submission.

§ 187.329 Who prescribes and provides the forms to be used?

A State must prescribe and provide the forms needed to comply with the titling system.

§ 187.331 What information is to be retained by a State?

A State must retain the evidence used to establish the accuracy of the information required for vessel titling purposes and make it available on request to the Coast Guard, participating States, and law enforcement authorities.

APPENDIX A TO PART 187—PARTICIPATING AUTHORITIES

The following States comply with the requirements for participating in VIS:

[Reserved]

APPENDIX B TO PART 187—PARTICIPATING AND CERTIFIED TITLING AUTHORITIES

The following States comply with the requirements for participating in VIS and have a certified titling system: [Reserved]

PARTS 188–199 [RESERVED]